NFPA 99C

Standard on Gas and Vacuum Systems

2005 Edition

NFPA, 1 Batterymarch Park, Quincy, MA 02169-7471
An International Codes and Standards Organization

Copyright National Fire Protection Association
Provided by IHS under license with NFPA
No reproduction or networking permitted without license from IHS

Not for Resale

IMPORTANT NOTICES AND DISCLAIMERS CONCERNING NFPA DOCUMENTS

NOTICE AND DISCLAIMER OF LIABILITY CONCERNING THE USE OF NFPA DOCUMENTS

NFPA codes, standards, recommended practices, and guides, of which the document contained herein is one, are developed through a consensus standards development process approved by the American National Standards Institute. This process brings together volunteers representing varied viewpoints and interests to achieve consensus on fire and other safety issues. While the NFPA administers the process and establishes rules to promote fairness in the development of consensus, it does not independently test, evaluate, or verify the accuracy of any information or the soundness of any judgments contained in its codes and standards.

The NFPA disclaims liability for any personal injury, property or other damages of any nature whatsoever, whether special, indirect, consequential or compensatory, directly or indirectly resulting from the publication, use of, or reliance on this document. The NFPA also makes no guaranty or warranty as to the accuracy or completeness of any information published herein.

In issuing and making this document available, the NFPA is not undertaking to render professional or other services for or on behalf of any person or entity. Nor is the NFPA undertaking to perform any duty owed by any person or entity to someone else. Anyone using this document should rely on his or her own independent judgment or, as appropriate, seek the advice of a competent professional in determining the exercise of reasonable care in any given circumstances.

The NFPA has no power, nor does it undertake, to police or enforce compliance with the contents of this document. Nor does the NFPA list, certify, test or inspect products, designs, or installations for compliance with this document. Any certification or other statement of compliance with the requirements of this document shall not be attributable to the NFPA and is solely the responsibility of the certifier or maker of the statement.

Copyright National Fire Protection Association
Provided by IHS under license with NFPA
No reproduction or networking permitted without license from IHS
Not for Resale

ADDITIONAL NOTICES AND DISCLAIMERS

Updating of NFPA Documents

Users of NFPA codes, standards, recommended practices, and guides should be aware that these documents may be superseded at any time by the issuance of new editions or may be amended from time to time through the issuance of Tentative Interim Amendments. An official NFPA document at any point in time consists of the current edition of the document together with any Tentative Interim Amendments and any Errata then in effect. In order to determine whether a given document is the current edition and whether it has been amended through the issuance of Tentative Interim Amendments or corrected through the issuance of Errata, consult appropriate NFPA publications such as the National Fire Codes® Subscription Service, visit the NFPA website at www.nfpa.org, or contact the NFPA at the address listed below.

Interpretations of NFPA Documents

A statement, written or oral, that is not processed in accordance with Section 6 of the Regulations Governing Committee Projects shall not be considered the official position of NFPA or any of its Committees and shall not be considered to be, nor be relied upon as, a Formal Interpretation.

Patents

The NFPA does not take any position with respect to the validity of any patent rights asserted in connection with any items which are mentioned in or are the subject of NFPA codes, standards, recommended practices, and guides, and the NFPA disclaims liability for the infringement of any patent resulting from the use of or reliance on these documents. Users of these documents are expressly advised that determination of the validity of any such patent rights, and the risk of infringement of such rights, is entirely their own responsibility.

NFPA adheres to applicable policies of the American National Standards Institute with respect to patents. For further information contact the NFPA at the address listed below.

Law and Regulations

Users of these documents should consult applicable federal, state, and local laws and regulations. NFPA does not, by the publication of its codes, standards, recommended practices, and guides, intend to urge action that is not in compliance with applicable laws, and these documents may not be construed as doing so.

Copyrights

This document is copyrighted by the NFPA. It is made available for a wide variety of both public and private uses. These include both use, by reference, in laws and regulations, and use in private self-regulation, standardization, and the promotion of safe practices and methods. By making this document available for use and adoption by public authorities and private users, the NFPA does not waive any rights in copyright to this document.

Use of NFPA documents for regulatory purposes should be accomplished through adoption by reference. The term "adoption by reference" means the citing of title, edition, and publishing information only. Any deletions, additions, and changes desired by the adopting authority should be noted separately in the adopting instrument. In order to assist NFPA in following the uses made of its documents, adopting authorities are requested to notify the NFPA (Attention: Secretary, Standards Council) in writing of such use. For technical assistance and questions concerning adoption of NFPA documents, contact NFPA at the address below.

For Further Information

All questions or other communications relating to NFPA codes, standards, recommended practices, and guides and all requests for information on NFPA procedures governing its codes and standards development process, including information on the procedures for requesting Formal Interpretations, for proposing Tentative Interim Amendments, and for proposing revisions to NFPA documents during regular revision cycles, should be sent to NFPA headquarters, addressed to the attention of the Secretary, Standards Council, NFPA, 1 Batterymarch Park, P.O. Box 9101, Quincy, MA 02269-9101.

For more information about NFPA, visit the NFPA website at www.nfpa.org.

Copyright National Fire Protection Association
Provided by IHS under license with NFPA
No reproduction or networking permitted without license from IHS
Not for Resale

Copyright © 2005, National Fire Protection Association, All Rights Reserved

NFPA 99C

Standard on

Gas and Vacuum Systems

[Excerpted from NFPA 99, *Standard for Health Care Facilities*, 2005 edition]

2005 Edition

The text contained herein is a reprint of text from NFPA 99, *Standard for Health Care Facilities*, 2005 edition, covering requirements and recommendations for gas and vacuum systems.

The 2005 edition of NFPA 99, *Standard for Health Care Facilities*, was prepared by the Technical Committees on Administration, Electrical Equipment, Electrical Systems, Gas Delivery Equipment, Health Care Emergency Preparedness and Disaster Planning, Hyperbaric and Hypobaric Facilities, and Piping Systems, released by the Technical Correlating Committee on Health Care Facilities and acted on by NFPA at its November Association Technical Meeting held November 13–17, 2004, in Miami Beach, FL. It was issued by the Standards Council on January 14, 2005, with an effective date of February 7, 2005, and supersedes all previous editions.

The 2005 edition of NFPA 99 was approved as an American National Standard on February 7, 2005.

Readers are cautioned that NFPA 99 is structured so that the applicability of requirements in Chapters 4 through 12 are specified for the health care facilities listed in Chapters 13 through 18 and Chapter 21.

Origin and Development of NFPA 99C

The gas systems portion of NFPA 99C originated from NFPA 56F, *Standard for Nonflammable Medical Gas Systems*. This document was incorporated into NFPA 99 during the processing of the 1987 edition of NFPA 99.

The vacuum systems portion of NFPA 99C originated from NFPA 56K, *Recommended Practice for Medical Surgical Vacuum Systems*. The 1980 edition of NFPA 56K was simultaneously revised to a standard and incorporated into the 1984 edition of NFPA 99.

The 1999 edition reorganized the chapter configuration and added a new Chapter 20 on free-standing birthing centers.

The 2002 edition was revised to meet the requirements of the *Manual of Style*. Gas and vacuum piping systems were reorganized to be more user friendly.

The 2005 edition added new pipe joining methods to Chapter 5, and Chapter 12 on Health Care Emergency Management was modified to correlate with NFPA 1600, *Standard on Disaster/Emergency Management and Business Continuity Programs*.

Copyright National Fire Protection Association
Provided by IHS under license with NFPA
No reproduction or networking permitted without license from IHS
Not for Resale

Technical Correlating Committee on Health Care Facilities (HEA-AAC)

Douglas S. Erickson, *Chair*
American Society for Healthcare Engineering, VI [U]
Rep. American Society for Healthcare Engineering

Constance Bobik, B&E Fire Safety Equipment Inc., FL [IM]
Wayne L. Brannan, Medical University of South Carolina, SC [U]
Rep. American Society of Safety Engineers
Michael A. Crowley, The RJA Group, Inc., TX [U]
Rep. NFPA Health Care Section
Richard E. Cutts, U.S. Air Force, TX [E]
Joshua W. Elvove, U.S. Department of Veterans Affairs, CO [U]
Rep. U.S. Department of Veterans Affairs
Marvin J. Fischer, Monroe Township, NJ [U]
Thomas W. Gardner, Schirmer Engineering Corporation, GA [I]
James R. Grimm, CDi Engineers, WA [SE]
William E. Koffel, Koffel Associates, Inc., MD [SE]
George F. Stevens, U.S. Department of Health and Human Services, AZ [E]
Rep. U.S. Department of Health and Human Services/IHS
Mayer D. Zimmerman, U.S. Department of Health and Human Services, MD [E]
Rep. U.S. Department of Health & Human Services/HCFA

Alternates

Eugene Phillips, Risk Management Resources, AZ [SE]
(Alt. to W. L. Brannan)
W. Thomas Schipper, Kaiser Foundation Health Plan, CA [U]
(Alt. to D. S. Erickson)
Sharon Stone Gilyeat, Koffel Associates, Inc., MD [SE]
(Alt. to W. E. Koffel)

Richard P. Bielen, NFPA Staff Liaison

This list represents the membership at the time the Committee was balloted on the final text of this edition. Since that time, changes in the membership may have occurred. A key to classifications is found at the back of the document.

NOTE: Membership on a committee shall not in and of itself constitute an endorsement of the Association or any document developed by the committee on which the member serves.

Committee Scope: This Committee shall have primary responsibility for documents that contain criteria for safeguarding patients and health care personnel in the delivery of health care services within health care facilities, as follows:

(1) From fire, explosion, electrical, and related hazards resulting either from the use of anesthetic agents, medical gas equipment, electrical apparatus, and high frequency electricity, or from internal or external incidents that disrupt normal patient care
(2) From fire and explosion hazards associated with laboratory practices
(3) In connection with the use of hyperbaric and hypobaric facilities (NFPA 99B) for medical purposes
(4) Through performance, maintenance, and testing criteria for electrical systems, both normal and essential
(5) Through performance, maintenance and testing, and installation criteria, as follows:
  (a) For vacuum systems for medical or surgical purposes
  (b) For medical gas systems

--`,,```,,,-`-`,,`,,`,`,,`---

Copyright National Fire Protection Association
Provided by IHS under license with NFPA
No reproduction or networking permitted without license from IHS
Not for Resale

Technical Committee on Piping Systems (HEA-PIP)
(Chapter 5 and related paragraphs in Chapters 13, 14, 17, 18, and 21) (Sections in Chapter 5 covering gas systems are submitted to the Technical Committee on Industrial and Medical Gases for concurrence before submittal to the Association for action)

David B. Mohile, *Chair*
Medical Engineering Services, Inc., VA [SE]

Mark W. Allen, Beacon Medical, NC [M]
Christopher Bernecker, H. T. Lyons, Incorporated, PA [IM]
David L. Brittain, PROVAC, OH [M]
Richard E. Cutts, U.S. Air Force, TX [E]
James S. Davidson, Jr., Davidson Associates, DE [SE]
Douglas S. Erickson, American Society for Healthcare Engineering, VI [U]
Rep. American Society for Healthcare Engineering
Peter Esherick, Patient Instrumentation Corporation, PA [SE]
P. L. Fan, American Dental Association, IL [U]
Michael Frankel, Utility Systems Consultants, NJ [SE]
Rep. American Society of Plumbing Engineers
Edward D. Golla TRI/Airtesting, TX [RT]
Burton R. Klein, Burton Klein Associates, MA [SE]
David Eric Lees, Georgetown University Medical Center, DC [C]
Rep. American Society of Anesthesiologists
Michael T. Massey, National ITC Corporation, CA [L]
Richard L. Miller, Medical Gas Technology Inc., NC [SE]
Thomas J. Mraulak, Metro Detroit Plumbing Industry Training Center, MI [L]
Rep. American Society of Sanitary Engineering
Fred C. Quarnstrom, Seattle, WA [U]
Rep. American Dental Association
E. Daniel Shoemaker, Matrx, AZ [M]
Ronald M. Smidt, Carolinas HealthCare System, NC [U]
Rep. NFPA Health Care Section
Edward K. Stevenson, Liberty Mutual Property Insurance Company , MA [I]
Rep. Alliance of American Insurers
Robert M. Sutter, BOC Gases, NJ [M]
Rep. Compressed Gas Association
J. Richard Wagner, Poole & Kent Company, MD [IM]
Rep. Mechanical Contractors Association of America, Inc.
Craig B. Williams, Life Medical Networks Inc., GA [SE]

Alternates

David D. Eastman, Metro Detroit Plumbing Industry Training Center, MI [L]
(Alt. to T. J. Mraulak)
David Esherick, Patient Instrumentation Corporation, PA [SE]
(Alt. to P. Esherick)
Keith Ferrari, Praxair, NC [M]
(Alt. to R. M. Sutter)
James A. Meyer, Pettis Memorial VA Hospital, CA [C]
(Alt. to D. E. Lees)
Curtis L. Mezzic, National ITC Corporation, LA [L]
(Alt. to M.T. Massey)
Daniel N. Miller, Medical Gas Technology Inc., NC [SE]
(Alt. to R. L. Miller)
Kenneth J. Muzal, Liberty Mutual Insurance Company, MA [I]
(Alt. to E. K. Stevenson)
Sharon Stanford, American Dental Association, IL [U]
(Alt. to P. L. Fan)
Christopher Swayze, The Sherman Engineering Company, PA [M]
(Alt. to M. W. Allen)
Dale Woodin, American Society for Healthcare Engineering, IL [U]
(Alt. to D. S. Erickson)

Richard P. Bielen, NFPA Staff Liaison

This list represents the membership at the time the Committee was balloted on the final text of this edition. Since that time, changes in the membership may have occurred. A key to classifications is found at the back of the document.

NOTE: Membership on a committee shall not in and of itself constitute an endorsement of the Association or any document developed by the committee on which the member serves.

Committee Scope: This Committee shall have primary responsibility for documents or portions of documents covering the performance, maintenance, installation, and testing of medical and dental related gas piping systems and medical and dental related vacuum piping systems.

Copyright National Fire Protection Association
Provided by IHS under license with NFPA
No reproduction or networking permitted without license from IHS
Not for Resale

Contents

Chapter 1 Administration **99C–** 5
1.1 Scope **99C–** 5
1.2 Purpose **99C–** 6
1.3 Application **99C–** 6
1.4 Equivalency **99C–** 6
1.5 Units and Formulas **99C–** 6
1.6 Standard Adoption Requirements **99C–** 6

Chapter 2 Referenced Publications **99C–** 6
2.1 General **99C–** 6
2.2 NFPA Publications **99C–** 7
2.3 Other Publications **99C–** 7

Chapter 3 Definitions **99C–** 8
3.1 General **99C–** 8
3.2 NFPA Official Definitions **99C–** 8
3.3 General Definitions **99C–** 8

Chapter 5 Gas and Vacuum Systems **99C–** 15
5.1 Level 1 Piped Gas and Vacuum Systems . **99C–** 15
5.2 Level 2 Piped Gas and Vacuum Systems. . **99C–** 46
5.3 Level 3 Piped Gas and Vacuum Systems . **99C–** 46

Chapter 6 Environmental Systems **99C–** 62
6.1 Applicability **99C–** 62

Chapter 11 Laboratories **99C–** 62
11.1 Applicability **99C–** 62
11.11 Piped Gas Systems **99C–** 62

Chapter 13 Hospital Requirements **99C–** 63
13.1 Applicability **99C–** 63

Chapter 14 Other Health Care Facilities **99C–** 63
14.1 Applicability **99C–** 63

Chapter 15 Reserved **99C–** 64

Chapter 16 Reserved **99C–** 64

Chapter 17 Nursing Home Requirements **99C–** 64
17.1 Applicability **99C–** 64

Chapter 18 Limited Care Facility Requirements . **99C–** 64
18.1 Applicability **99C–** 64

Chapter 20 Hyperbaric Facilities **99C–** 64
20.1 Applicability **99C–** 64

Chapter 21 Freestanding Birthing Centers **99C–** 65
21.1 Applicability **99C–** 65

Annex A Explanatory Material **99C–** 65

Annex B Nature of Hazards **99C–** 90

Annex C Additional Explanatory Notes to Chapters 1–20 ..... **99C–** 91

Annex F Sample Ordinance Adopting NFPA 99 . **99C–** 93

Annex G Informational References **99C–** 94

Index **99C–** 95

--`,,`,,,`-`-`,,`,,`,`,,`---
Copyright National Fire Protection Association
Provided by IHS under license with NFPA
No reproduction or networking permitted without license from IHS
Not for Resale

NFPA 99C

Standard on

Gas and Vacuum Systems

[Excerpted from NFPA 99, *Standard for Health Care Facilities*, 2005 edition]

2005 Edition

IMPORTANT NOTE: This NFPA document is made available for use subject to important notices and legal disclaimers. These notices and disclaimers appear in all publications containing this document and may be found under the heading "Important Notices and Disclaimers Concerning NFPA Documents." They can also be obtained on request from NFPA or viewed at www.nfpa.org/disclaimers.

NOTICE: An asterisk (*) following the number or letter designating a paragraph indicates that explanatory material on the paragraph can be found in Annex A.

Changes other than editorial are indicated by a vertical rule beside the paragraph, table, or figure in which the change occurred. These rules are included as an aid to the user in identifying changes from the previous edition. Where one or more complete paragraphs have been deleted, the deletion is indicated by a bullet (•) between the paragraphs that remain.

A reference in brackets [ ] following a section or paragraph indicates material that has been extracted from another NFPA document. As an aid to the user, the complete title and edition of the source documents for mandatory extracts are given in Chapter 2 and those for nonmandatory extracts are given in Annex G. Editorial changes to extracted material consist of revising references to an appropriate division in this document or the inclusion of the document number with the division number when the reference is to the original document. Requests for interpretations or revisions of extracted text shall be sent to the technical committee responsible for the source document.

Information on referenced publications can be found in Chapter 2 and Annex G.

Further explanatory information on Chapters 1 through 20 can be found in Annex C.

Chapter 1 Administration

1.1 Scope.

1.1.1 The scope of this document is to establish criteria to minimize the hazards of fire, explosion, and electricity in health care facilities providing services to human beings.

1.1.2 Annex D of NFPA 99 covers principles of design and use of electrical and electronic appliances generating high-frequency currents for medical treatment in hospitals, clinics, ambulatory care facilities, and dental offices, whether fixed or mobile.

1.1.2.1 Areas Not Addressed. The following areas are not addressed:

(1) Communication equipment, resuscitation equipment (e.g., defibrillators), or physiological stimulators (e.g., used for anesthesia, acupuncture)
(2) Experimental or research apparatus built to order, or under development, provided such apparatus is used under qualified supervision and provided the builder demonstrates to the authority having jurisdiction that the apparatus has a degree of safety equivalent to that described in Annex D of NFPA 99

1.1.3 Annex E of NFPA 99 retains the established requirements that would be necessary for the safe use of flammable inhalation anesthetics should the use of this type of anesthetic be reinstituted.

1.1.4 Chapter 4, Electrical Systems, of NFPA 99 covers the performance, maintenance, and testing of electrical systems (both normal and essential) used within health care facilities.

1.1.4.1 Areas Not Addressed in Chapter 4 of NFPA 99. The following areas are not addressed in NFPA 99, but are addressed in other NFPA documents:

(1) Specific requirements for wiring and installation on equipment are covered in NFPA 70, *National Electrical Code*.
(2) Requirements for illumination and identification of means of egress in health care facilities are covered in NFPA *101*, *Life Safety Code*.
(3) Requirements for fire protection signaling systems.
(4) Requirements for fire pumps are covered in NFPA 20, *Standard for the Installation of Stationary Pumps for Fire Protection*, except that the alternate source of power shall be permitted to be the essential electrical system.
(5) Requirements for the installation of stationary engines and gas turbines are covered in NFPA 37, *Standard for the Installation and Use of Stationary Combustion Engines and Gas Turbines*.

1.1.5 Chapter 5, Gas and Vacuum Systems, covers the performance, maintenance, installation, and testing of the following:

(1) Nonflammable medical gas systems with operating pressures below a gauge pressure of 2068 kPa (300 psi)
(2) Vacuum systems used within health care facilities
(3) Waste anesthetic gas disposal (WAGD) systems, also referred to as scavenging
(4) Manufactured assemblies that are intended for connection to the medical gas, vacuum, or WAGD systems (also referred to as scavenging)

1.1.5.1 Areas Not Addressed in Chapter 5. Requirements for portable compressed gas systems are covered in Chapter 9, Gas Equipment.

1.1.6 Chapter 6, Environmental Systems, covers the performance, maintenance, and testing of the environmental systems used within health care facilities.

1.1.7 Chapter 7, Materials, of NFPA 99 covers the hazards associated with the use of flammable and combustible materials used within health care facilities.

1.1.8 Chapter 8, Electrical Equipment, of NFPA 99 covers the performance, maintenance, and testing of electrical equipment used within health care facilities.

1.1.9 Chapter 9, Gas Equipment, of NFPA 99 covers the performance, maintenance, and testing of gas equipment used within health care facilities.

1.1.10 Chapter 10, Manufacturer Requirements, of NFPA 99 covers the performance, maintenance, and testing, with regard to safety, required of manufacturers of equipment used within health care facilities.

1.1.11 Chapter 11, Laboratories, establishes criteria to minimize the hazards of fire and explosions in laboratories, as defined in Chapter 3.

1.1.11.1 Areas Not Addressed in Chapter 11. Subsection 1.1.11 is not intended to cover hazards resulting from any of the following:

(1) Chemicals
(2) Radioactive materials
(3)*Biological materials that will not result in fires or explosions

Copyright National Fire Protection Association
Provided by IHS under license with NFPA
No reproduction or networking permitted without license from IHS
Not for Resale

1.1.12* Chapter 12, Health Care Emergency Management, of NFPA 99 establishes minimum criteria for health care facility emergency management in the development of a program for effective disaster preparedness, response, mitigation, and recovery.

1.1.13 Chapter 13, Hospital Requirements, addresses safety requirements of hospitals.

1.1.14 Chapter 14, Other Health Care Facilities, addresses safety requirements for facilities, or portions thereof, that provide diagnostic and treatment services to patients in health care facilities. Requirements for specific health care facilities are addressed in the following chapters:

(1) Hospitals — Chapter 13
(2) Nursing homes — Chapter 17
(3) Limited care facilities — Chapter 18

1.1.15 Reserved.

1.1.16 Reserved.

1.1.17 Chapter 17, Nursing Home Requirements, addresses safety requirements of nursing homes.

1.1.18 Chapter 18, Limited Care Facility Requirements, covers safety requirements of limited care facilities.

1.1.19 Chapter 19, Electrical and Gas Equipment for Home Care, of NFPA 99 addresses the requirements for the safe use of electrical and gas equipment used for home care medical treatment.

1.1.20* Chapter 20, Hyperbaric Facilities, covers the recognition of and protection against hazards of an electrical, explosive, or implosive nature, as well as fire hazards associated with hyperbaric chambers and associated facilities that are used, or intended to be used, for medical applications and experimental procedures at gauge pressures from 0 to 690 kPa (0 to 100 psi). Chapter 20 applies to both single- and multiple-occupancy hyperbaric chambers; to animal chambers, the size of which precludes human occupancy; and to those in which the chamber atmosphere contains an oxygen partial pressure greater than an absolute pressure of 21.3 kPa (3.09 psi) (0.21 atmospheres).

1.1.21 Chapter 21, Freestanding Birthing Centers, addresses the requirements for the safe use of electrical and gas equipment, and for electrical, gas, and vacuum systems used for the delivery and care of infants in freestanding birthing centers.

1.2 Purpose.

1.2.1 The purpose of this standard is to provide minimum requirements for the performance, maintenance, testing, and safe practices for facilities, material, equipment, and appliances, including other hazards associated with the primary hazards.

1.3 Application.

1.3.1 This document shall apply to all health care facilities.

1.3.2 Construction and equipment requirements shall be applied only to new construction and new equipment, except as modified in individual chapters. Only the altered, renovated, or modernized portion of an existing system or individual component shall be required to meet the installation and equipment requirements stated in this standard. If the alteration, renovation, or modernization adversely impacts existing performance requirements of a system or component, additional upgrading shall be required.

1.3.3 Chapters 13 through 19 of NFPA 99 specify the conditions under which the requirements of Chapters 4 through 12 of NFPA 99 shall apply in Chapters 13 through 19 of NFPA 99.

1.3.4 This document is intended for use by those persons involved in the design, construction, inspection, and operation of health care facilities and in the design, manufacture, and testing of appliances and equipment used in patient care areas of health care facilities. Nonflammable piped medical gases covered by this document include, but are not limited to, oxygen, nitrogen, nitrous oxide, medical air, carbon dioxide, and helium.

1.4 Equivalency.

1.4.1 The authority having jurisdiction for the enforcement of this document shall be permitted to grant exceptions to its requirements.

1.4.2 Nothing in this standard is intended to prevent the use of systems, methods, or devices of equivalent or superior quality, strength, fire resistance, effectiveness, durability, and safety to those prescribed by this standard. Technical documentation shall be submitted to the authority having jurisdiction to demonstrate equivalency. The system, method, or device shall be approved for the intended purpose by the authority having jurisdiction.

1.5 Units and Formulas.

1.5.1* Primary units will be trade units, secondary will be the conversion. Although it is common practice for medical appliances to have metric units on their dials, gauges, and controls, many components of systems within the scope of this document, which are manufactured and used in the United States, employ nonmetric dimensions. Since these dimensions (such as nominal pipe sizes) are not established by the National Fire Protection Association, the Technical Correlating Committee on Health Care Facilities cannot independently change them. Accordingly, this document uses dimensions that are presently in common use by the building trades in the United States.

1.6 Standard Adoption Requirements.

1.6.1 The effective date of application of any provision of this document is not determined by the National Fire Protection Association. All questions related to applicability shall be directed to the authority having jurisdiction.

1.6.2 Enforcement. This standard shall be administered and enforced by the authority having jurisdiction designated by the governing authority. *(See Annex F for a sample wording for enabling legislation.)*

Chapter 2 Referenced Publications

2.1 General. The documents or portions thereof listed in this chapter are referenced within this standard and shall be considered part of the requirements of this document.

2.2 NFPA Publications. National Fire Protection Association, 1 Batterymarch Park, Quincy, MA 02169-7471.

NFPA 10, *Standard for Portable Fire Extinguishers,* 2002 edition.

NFPA 13, *Standard for the Installation of Sprinkler Systems,* 2002 edition.

NFPA 30, *Flammable and Combustible Liquids Code,* 2003 edition.

Copyright National Fire Protection Association
Provided by IHS under license with NFPA
No reproduction or networking permitted without license from IHS
Not for Resale

NFPA 37, *Standard for the Installation and Use of Stationary Combustion Engines and Gas Turbines,* 2002 edition.

NFPA 45, *Standard on Fire Protection for Laboratories Using Chemicals,* 2004 edition.

NFPA 51, *Standard for the Design and Installation of Oxygen–Fuel Gas Systems for Welding, Cutting, and Allied Processes,* 2002 edition.

NFPA 54, *National Fuel Gas Code,* 2002 edition.

NFPA 58, *Liquefied Petroleum Gas Code,* 2004 edition.

NFPA 70, *National Electrical Code®,* 2005 edition.

NFPA 72®, National Fire Alarm Code®, 2002 edition.

NFPA 99B, *Standard for Hypobaric Facilities,* 2005 edition.

NFPA *101®, Life Safety Code®,* 2003 edition.

NFPA 110, *Standard for Emergency and Standby Power Systems,* 2005 edition.

NFPA 220, *Standard on Types of Building Construction,* 1999 edition.

NFPA 255, *Standard Method of Test of Surface Burning Characteristics of Building Materials,* 2000 edition.

NFPA 326, *Standard for the Safeguarding of Tanks and Containers for Entry, Cleaning, or Repair,* 1999 edition.

NFPA 701, *Standard Methods of Fire Tests for Flame Propagation of Textiles and Films,* 2004 edition.

NFPA 704, *Standard System for the Identification of the Hazards of Materials for Emergency Response,* 2001 edition.

NFPA 1600, *Standard on Disaster/Emergency Management and Business Continuity Programs,* 2004 edition.

2.3 Other Publications.

2.3.1 ANSI Publications. American National Standards Institute, Inc., 22 West 43rd Street, 4th floor, New York, NY 10036.

ANSI/ASSE Series 6000, *Professional Qualifications Standard for Medical Gas Systems Installers, Inspectors, and Verifiers*, 2001.

ANSI B16.22, *Wrought Copper and Copper Alloy Solder -Joint Pressure Fittings*, 2001.

ANSI B57.1 (See CGA V-1.)

ANSI C84.1, *Electric Power Systems and Equipment — Voltage Ratings*, 1995.

ANSI C-4 (See CGA C-4.)

ANSI G-7.1 (See CGA G-7.1.)

2.3.2 ASME Publications. American Society of Mechanical Engineers, Three Park Avenue, New York, NY 10016-5990.

ANSI/ASME PVHO-1-1990, *Safety Standard for Pressure Vessels for Human Occupancy.*

ASME *Boiler and Pressure Vessel Code*, 2001.

2.3.3 ASTM Publications. American Society for Testing and Materials, 100 Barr Harbor Drive, West Conshohocken, PA 19428-2959.

ASTM A 53, *Standard Specification for Pipe, Steel, Black and Hot-Dipped, Zinc-Coated, Welded and Seamless*, 1994.

ASTM B 32, *Standard Specification for Solder Metal*, 1996.

ASTM B 88, *Standard Specification for Seamless Copper Water Tube*, 2002.

ASTM B 280, *Standard Specification for Seamless Copper Tubing for Air Conditioning and Refrigeration Field Service*, 2002.

ASTM B 819, *Standard Specification for Seamless Copper Tube for Medical Gas Systems*, 2000.

ASTM B 828, *Standard Practice for Making Capillary Joints by Soldering of Copper and Copper Alloy Tube and Fittings*, 2002.

ASTM D 5, *Standard Test Method for Penetration of Bituminous Materials*, 1997.

ASTM D 2863, *Standard Test Method for Measuring the Minimum Oxygen Concentration to Support Candle-like Combustion of Plastics (Oxygen Index)* (ANSI D2863), 1997.

ASTM E 136, *Standard Test Method for Behavior of Materials in a Vertical Tube Furnace at 750°C*, 1998.

2.3.4 AWS Publications. American Welding Society, 550 N.W. LeJeune Road, Miami, FL 33126.

ANSI/AWS A5.8, *Specification for Filler Metals for Brazing and Braze Welding*, 1992.

AWS B2.2, *Standard for Brazing Procedure and Performance Qualification*, 1991.

2.3.5 CDA Publication. Copper Development Association Inc., 260 Madison Avenue, New York, NY 10016, www.copper.org.

Copper Tube Handbook.

2.3.6 CGA Publications. Compressed Gas Association, 4221 Walney Road, 5th Floor, Chantilly, VA 20151-2923.

GCA C-7, *Guide to the Preparation of Precautionary Labeling and Marking of Compressed Gas Containers*, 2004.

CGA G-4, *Oxygen*, 1996.

CGA G-4.1, *Cleaning Equipment for Oxygen Service*, 2004.

CGA G-8.1, *Standard for Nitrous Oxide Systems at Consumer Sites*, 1990.

CGA P-2.5, *Transfilling of High Pressure Gaseous Oxygen to be Used for Respiration*, 2000.

CGA P-2.6, *Transfilling of Liquid Oxygen to be Used for Respiration*, 1995.

CGA P-2.7, *Guide for the Safe Storage, Handling, and Use of Portable Liquid Oxygen Systems in Healthcare Facilities*, 2000.

CGA V-1, *Compressed Gas Association Standard for Compressed Gas Cylinder Valve Outlet and Inlet Connections* (ANSI B57.1), 2003.

CGA V-5, *Diameter-Index Safety System (Noninterchangeable Low Pressure Connections for Medical Gas Applications)*, 2000.

2.3.7 ISA Publications. The Instrumentation, Systems, and Automation Society (ISA), 67 Alexander Drive, Research Triangle Park, NC 27709.

RP 12.6, *Installation of Intrinsically Safe Systems in Hazardous Locations*, 1995.

2.3.8 MSS Publications. Manufacturer's Standardization Society of the Valve and Fittings Industry, Inc., 127 Park Street NE, Vienna, VA 22180.

SP-58, *Pipe Hangers and Supports — Materials, Design, and Manufacture*, 2002.

SP-69, *Pipe Hangers and Supports — Selection and Application*, 2002.

2.3.9 NCCLS Publication. National Committee for Clinical Laboratory Standards, 940 West Valley Road, Suite 1400, Wayne, PA 19087-1898.

NCCLS ASI-5, *Power Requirements for Clinical Laboratory Instruments and for Laboratory Power Sources.*

Copyright National Fire Protection Association
Provided by IHS under license with NFPA
No reproduction or networking permitted without license from IHS
Not for Resale

2.3.10 UL Publication. Underwriters Laboratories Inc., 333 Pfingsten Road, Northbrook, IL 60062-2096.

UL 94, *Test for Flammability of Plastic Materials for Parts in Devices and Appliances*, 2001.

2.3.11 U.S. Government Publication. Document Automation and Production Service (DAPS), Building 4D, 700 Robbins Avenue, Philadelphia, PA 19111-5094, www.dodssp.daps.mil.

MIL-Standard 104C, *Limit for Electrical Insulation Color.*

Chapter 3 Definitions

3.1 General. The definitions contained in this chapter shall apply to the terms used in this standard. Where terms are not defined in this chapter or within another chapter, they shall be defined using their ordinarily accepted meanings within the context in which they are used. *Merriam-Webster's Collegiate Dictionary*, 11th edition, shall be the source for the ordinarily accepted meaning.

3.2 NFPA Official Definitions.

3.2.1* Approved. Acceptable to the authority having jurisdiction.

3.2.2* Authority Having Jurisdiction (AHJ). An organization, office, or individual responsible for enforcing the requirements of a code or standard, or for approving equipment, materials, an installation, or a procedure.

3.2.3* Code. A standard that is an extensive compilation of provisions covering broad subject matter or that is suitable for adoption into law independently of other codes and standards.

3.2.4 Guide. A document that is advisory or informative in nature and that contains only nonmandatory provisions. A guide may contain mandatory statements such as when a guide can be used, but the document as a whole is not suitable for adoption into law.

3.2.5 Labeled. Equipment or materials to which has been attached a label, symbol, or other identifying mark of an organization that is acceptable to the authority having jurisdiction and concerned with product evaluation, that maintains periodic inspection of production of labeled equipment or materials, and by whose labeling the manufacturer indicates compliance with appropriate standards or performance in a specified manner.

3.2.6* Listed. Equipment, materials, or services included in a list published by an organization that is acceptable to the authority having jurisdiction and concerned with evaluation of products or services, that maintains periodic inspection of production of listed equipment or materials or periodic evaluation of services, and whose listing states that either the equipment, material, or service meets appropriate designated standards or has been tested and found suitable for a specified purpose.

3.2.7 Shall. Indicates a mandatory requirement.

3.2.8 Should. Indicates a recommendation or that which is advised but not required.

3.2.9 Standard. A document, the main text of which contains only mandatory provisions using the word "shall" to indicate requirements and which is in a form generally suitable for mandatory reference by another standard or code or for adoption into law. Nonmandatory provisions shall be located in an appendix or annex, footnote, or fine-print note and are not to be considered a part of the requirements of a standard.

3.3 General Definitions.

3.3.1 ACFM. Actual cubic feet per minute. (PIP)

3.3.2 Adiabatic Heating. The heating of a gas caused by its compression. (HYP)

3.3.3 Aerosol. An intimate mixture of a liquid or a solid in a gas; the liquid or solid, called the dispersed phase, is uniformly distributed in a finely divided state throughout the gas, which is the continuous phase or dispersing medium. (GAS)

3.3.4 Alarm Systems.

3.3.4.1 ***Area Alarm System.*** A warning system within an area of use that provides continuous visible and audible surveillance of Level 1 and Level 2 medical gas and vacuum systems. (PIP)

3.3.4.2 ***Level 3 Alarm System.*** A warning system within an area of use that provides continuous visible and audible surveillance of Level 3 medical gas systems. (PIP)

3.3.4.3 ***Local Alarm System.*** A warning system that provides continuous visible and audible surveillance of medical gas and vacuum system source equipment at the equipment site. (PIP)

3.3.4.4 ***Master Alarm System.*** A warning system that monitors the operation and condition of the source of supply, the reserve source (if any), and the pressure in the main lines of each medical gas and vacuum piping system. (PIP)

3.3.5 Alternate Power Source. One or more generator sets, or battery systems where permitted, intended to provide power during the interruption of the normal electrical service; or the public utility electrical service intended to provide power during interruption of service normally provided by the generating facilities on the premises. (ELS)

3.3.6 Ambulatory Health Care Center. A building or portion thereof used to provide services or treatment simultaneously to four or more patients that (1) provides, on an outpatient basis, treatment for patients that renders the patients incapable of taking action for self-preservation under emergency conditions without the assistance of others; or (2) provides, on an outpatient basis, anesthesia that renders the patients incapable of taking action for self-preservation under emergency conditions without the assistance of others. (ADM)

3.3.7 Ampacity. The current, in amperes, that a conductor can carry continuously under the conditions of use without exceeding its temperature rating. (ELS)

3.3.8 Anesthetic. As used in this standard, applies to any inhalation agent used to produce relative analgesia or general anesthesia. (GAS)

3.3.9* Anesthetizing Location. Any area of a facility that has been designated to be used for the administration of nonflammable inhalation anesthetic agents in the course of examination or treatment, including the use of such agents for relative analgesia. *(See also 3.3.158, Relative Analgesia.)* (GAS)

3.3.10 Anoxia. A state of markedly inadequate oxygenation of the tissues and blood, of more marked degree than hypoxia. (HYP)

3.3.11 Appliance. Utilization equipment, generally other than industrial, normally built in standardized sizes or types,

--`,,```,,,-`-`,,`,,`,`,,`---

Copyright National Fire Protection Association
Provided by IHS under license with NFPA
No reproduction or networking permitted without license from IHS
Not for Resale

that is installed or connected as a unit to perform one or more functions. (ELE)

3.3.12* Applicator. A means of applying high-frequency energy to a patient other than by an electrically conductive connection. (ELE)

3.3.13 Area of Administration. Any point within a room within 4.3 m (15 ft) of oxygen equipment or an enclosure containing or intended to contain an oxygen-enriched atmosphere. (GAS)

3.3.14* Atmosphere. The pressure exerted by, and gaseous composition of, an environment. (HYP)

3.3.14.1 ***Ambient Atmosphere.*** The pressure and composition of the environment surrounding a chamber. (HYP)

3.3.14.2 ***Atmosphere Absolute (ATA).*** The pressure of the earth's atmosphere, 760.0 mmHg, 101.325 kPa, or 14.7 psia. Two ATA = two atmospheres. *(See also 3.3.14, Atmosphere.)* (HYP)

3.3.14.3* ***Atmosphere of Increased Burning Rate.*** Any atmosphere containing a percentage of oxygen or oxygen and nitrous oxide greater than the quotient of 23.45 divided by the square root of the total pressure in atmospheres. (HYP)

3.3.14.4 ***Chamber Atmosphere.*** The environment inside a chamber. (HYP)

3.3.15 Automatic. Providing a function without the necessity of human intervention. (ELS)

3.3.16* Bends. Decompression sickness; caisson worker's disease. (HYP)

3.3.17 Branch Circuit. The circuit conductors between the final overcurrent device protecting the circuit and the outlet(s). [**70,** 2005] (ELS)

3.3.18 Branch Line. See 3.3.145, Piping.

3.3.19 Bulk System. An assembly of equipment, such as storage containers, pressure regulators, pressure relief devices, vaporizers, manifolds, and interconnecting piping, that terminates at the source valve of oxygen or 1452 kg (3200 lb) of nitrous oxide including unconnected reserves on the site. (PIP)

3.3.19.1 ***Bulk Nitrous Oxide System.*** An assembly of equipment as described in the definition of bulk oxygen system that has a storage capacity of more than 3200 lb (1452 kg) [approximately 28,000 ft^3 (793 m^3) (at normal temperature and pressure)] of nitrous oxide. (PIP)

3.3.19.2* ***Bulk Oxygen System.*** An assembly of equipment such as oxygen storage containers, pressure regulators, pressure relief devices, vaporizers, manifolds, and interconnecting piping that has a storage capacity of more than 566 m^3 (20,000 ft^3) of oxygen (at normal temperature and pressure) including unconnected reserves on hand at the site. (PIP)

3.3.20 Cold Room. A refrigerated area large enough for personnel to enter. (LAB)

3.3.21 Combustible. Capable of undergoing combustion. (GAS)

3.3.22* Combustible Liquid. A liquid having a flash point at or above 37.8°C (100°F). Combustible liquids shall be subdivided as follows: (a) Class II liquids shall include those having flash points at or above 37.8°C (100°F) and below 60°C (140°F); (b) Class IIIA liquids shall include those having flash points at or above 60°C (140°F) and below 93°C (200°F); (c) Class IIIB liquids shall include those having flash points at or above 93°C (200°F). (LAB)

3.3.23* Combustion. A chemical process (such as oxidation) accompanied by the rapid evolution of heat and light. (GAS)

3.3.24 Combustion Products. The gases, volatilized liquids and solids, particulate matter, and ash generated by combustion. (GAS)

3.3.25 Container. A low-pressure, vacuum-insulated vessel containing gases in liquid form. (GAS)

3.3.26 Critical Branch. A subsystem of the emergency system consisting of feeders and branch circuits supplying energy to task illumination, special power circuits, and selected receptacles serving areas and functions related to patient care and that are connected to alternate power sources by one or more transfer switches during interruption of normal power source. (ELS)

3.3.27 Critical Care Area. See 3.3.138, Patient Care Area.

3.3.28 Critical Equipment. That equipment essential to the safety of the occupants of the facility. (HYP)

3.3.29 Critical System. A system of feeders and branch circuits in nursing homes and custodial care facilities arranged for connection to the alternate power source to restore service to certain critical receptacles, task illumination, and equipment. (ELS)

3.3.30 Cylinder. A supply tank containing high-pressure gases or gas mixtures at pressures that can be in excess of 2000 psi gauge (13.8 kPa gauge). (GAS)

3.3.31 Decompression Sickness. A syndrome due to evolved gas in the tissues resulting from a reduction in ambient pressure. (HYP)

3.3.32 Detonation. An exothermic reaction wherein the reaction propagates through the unreacted material at a rate exceeding the velocity of sound, hence the explosive noise. (GAS)

3.3.33* Direct Electrical Pathway to the Heart. An externalized conductive pathway, insulated except at its ends, one end of which is in direct contact with heart muscle while the other is outside the body and is accessible for inadvertent or intentional contact with grounded objects or energized, ground-referenced sources. (ELE)

3.3.34* Disaster. Within the context of this document, a disaster is defined as any unusual occurrence or unforeseen situation that seriously overtaxes or threatens to seriously overtax the routine capabilities of a health care facility. (HCE)

3.3.35 D.I.S.S. Connector. A system of noninterchangeable medical gas and vacuum connectors complying with CGA V-5, *Diameter-Index Safety System (Noninterchangeable Low Pressure Connections for Medical Gas Applications).* (PIP)

3.3.36* Double-Insulated Appliances. Appliances where the primary means of protection against electrical shock is not grounding. The primary means is by the use of combinations of insulation and separation spacings in accordance with an approved standard. (ELE)

3.3.37 Electrical Life Support Equipment. Electrically powered equipment whose continuous operation is necessary to maintain a patient's life. (ELS)

Copyright National Fire Protection Association
Provided by IHS under license with NFPA
No reproduction or networking permitted without license from IHS
Not for Resale

3.3.38 Electrode. An electrically conductive connection to a patient. (ELE)

3.3.38.1 ***Active Electrode.*** An electrode intended to generate a surgical or physiological effect at its point of application to the patient. (ELE)

3.3.38.2 ***Bipolar Electrode.*** An electrode consisting of adjacent contacts (e.g., the two legs of a forceps) such that the current passes between the pair of contacts generating the intended effect. (ELE)

3.3.38.3* ***Dispersive Electrode.*** An electrode, intended to complete the electrical path between patient and appliance and at which no surgical effect is intended. (ELE)

3.3.39 Emergency Management. The act of developing procedures and plans to create effective preparedness, mitigation, response, and recovery during a disaster affecting a health care facility. (HCE)

3.3.40 Emergency Oxygen Supply Connection. An assembly of equipment which permits a gas supplier to make a temporary connection to supply oxygen to a building which has had its normal source of oxygen disconnected. (PIP)

3.3.41 Emergency System. A system of circuits and equipment intended to supply alternate power to a limited number of prescribed functions vital to the protection of life and safety. (ELS)

3.3.42 Equipment Grounding Bus. A grounding terminal bus in the feeder circuit of the branch circuit distribution panel that serves a particular area. (ELE)

3.3.43 Equipment System. A system of feeders and branch circuits arranged for delayed, automatic, or manual connection the alternate power source and that serves primarily 3-phase power equipment. (ELS)

3.3.44 Essential Electrical System. A system comprised of alternate sources of power and all connected distribution systems and ancillary equipment, designed to ensure continuity of electrical power to designated areas and functions of a health care facility during disruption of normal power sources, and also to minimize disruption within the internal wiring system. (ELS)

3.3.45 Evacuation — Waste Gas. See 3.3.184, Waste Anesthetic Gas Disposal.

3.3.46 Exposed Conductive Surfaces. Those surfaces that are capable of carrying electric current and that are unprotected, uninsulated, unenclosed, or unguarded, permitting personal contact. (ELE)

3.3.47* Failure. An incident that increases the hazard to personnel or patients or that affects the safe functioning of electric appliances or devices. (ELE)

3.3.48 Fault Current. A current in an accidental connection between an energized and a grounded or other conductive element resulting from a failure of insulation, spacing, or containment of conductors. (ELS)

3.3.49 Feeder. All circuit conductors between the service equipment, the source of a separately derived system, or other power supply source and the final branch-circuit overcurrent device. (ELS)

3.3.50* Flame Resistant. The property of a material that passes the small-scale test in NFPA 701, *Standard Methods of Fire Tests for Flame Propagation of Textiles and Films.* (HYP)

3.3.51* Flammable. A combustible that is capable of easily being ignited and rapidly consumed by fire. (LAB)

3.3.52 Flammable Gas. Any substance that exists in the gaseous state at normal atmospheric temperature and pressure and is capable of being ignited and burned when mixed with proper proportion of air, oxygen, or other oxidizers. (HYP)

3.3.53 Flammable Liquid. A liquid that has a closed-cup flash point that is below 37.8°C (100°F) and a maximum vapor pressure of 2068 mm Hg (40 psi absolute) at 37.8°C (100°F). (LAB)

3.3.54* Flash Point. The minimum temperature at which a liquid gives off vapor in sufficient concentration to form an ignitable mixture with air near the surface of the liquid within the vessel, as specified by appropriate test procedures and apparatus. (LAB)

3.3.55 Flow-Control Valve. A valve, usually a needle valve, that precisely controls flow of gas. (GAS)

3.3.56 Flowmeter. A device for measuring volumetric flow rates of gases and liquids. (GAS)

3.3.56.1 ***Pressure Compensated Flowmeter.*** A flowmeter indicating accurate flow of gas whether the gas is discharged into ambient pressure or into a system at nonambient pressure. (GAS)

3.3.57 Freestanding Birthing Center. A facility in which low-risk births are expected following normal, uncomplicated pregnancies, and in which professional midwifery care is provided to women during pregnancy, birth, and postpartum. (ADM)

3.3.58* Frequency. The number of oscillations, per unit time, of a particular current or voltage waveform. The unit of frequency is the hertz. (ELE)

3.3.59* Fume Hood. An enclosure designed to draw air inward by means of mechanical ventilation. (LAB)

3.3.60 Gas-Powered System. A Level 3 gas distribution system comprised of component parts including but not limited to cylinders, manifolds, air compressor, motor, receivers, controls, filters, dryers, valves, and piping that delivers compressed air or nitrogen at pressures less than 1100 kPa (less than 160 psi) gauge to power devices (e.g., hand pieces, syringes, cleaning devices) as a power source. (PIP)

3.3.61 General Care Area. See 3.3.138, Patient Care Area.

3.3.62 Governing Body. The person or persons who have the overall legal responsibility for the operation of a health care facility. (ADM)

3.3.63 Ground-Fault Circuit Interrupter (GFCI). A device intended for the protection of personnel that functions to deenergize a circuit or portion thereof within an established period of time when a current to ground exceeds some predetermined value that is less than that required to operate the overcurrent protective device of the supply circuit. (ELS)

3.3.64 Grounding. See 3.3.65, Grounding System.

3.3.65* Grounding System. A system of conductors that provides a low-impedance return path for leakage and fault currents. (ELS)

3.3.66 Hazard Current. For a given set of connections in an isolated power system, the total current that would flow through a low impedance if it were connected between either isolated conductor and ground. (ELS)

Copyright National Fire Protection Association
Provided by IHS under license with NFPA
No reproduction or networking permitted without license from IHS
Not for Resale

3.3.66.1 ***Fault Hazard Current.*** The hazard current of a given isolated power system with all devices connected except the line isolation monitor. (ELS)

3.3.66.2 ***Monitor Hazard Current.*** The hazard current of the line isolation monitor alone. (ELS)

3.3.66.3 ***Total Hazard Current.*** The hazard current of a given isolated system with all devices, including the line isolation monitor, connected. (ELS)

3.3.67* Hazardous Chemical. A chemical with one or more of the following hazard ratings as defined in NFPA 704, *Standard System for the Identification of the Hazards of Materials for Emergency Response:* Health — 2, 3, or 4; Flammability — 2, 3, or 4; Reactivity — 2, 3, or 4. (LAB)

3.3.68* Health Care Facilities. Buildings or portions of buildings in which medical, dental, psychiatric, nursing, obstetrical, or surgical care are provided. (ADM)

3.3.69 Home Care. Medical services (equipment) provided in residential occupancies. (ADM)

3.3.70 Hospital. A building or portion thereof used on a 24-hour basis for the medical, psychiatric, obstetrical, or surgical care of four or more inpatients. [***101***, 2003] (ADM)

3.3.71 Hospital-Based. In the interpretation and application of this document, physically connected to a hospital. (GAS)

3.3.72 Humidifier. A device used for adding water vapor to inspired gas. (GAS)

3.3.73 Hyperbaric. Facility, building, or structure used to house chambers and all auxiliary service equipment for medical applications and procedures at pressures above normal atmospheric pressures. (HYP)

3.3.74 Hyperbaric Oxygenation. The application of pure oxygen or an oxygen-enriched gaseous mixture to a subject at elevated pressure. (HYP)

3.3.75 Hypobaric. Facility, building, or structure used to house chambers and all auxiliary service equipment for medical applications and procedures at pressures below atmospheric pressures. (HYP)

3.3.76 Hypoxia. A state of inadequate oxygenation of the blood and tissue sufficient to cause impairment of function. [**99B,** 2005] (HYP)

3.3.77 Immediate Restoration of Service. Automatic restoration of operation with an interruption of not more than 10 seconds. (ELS)

3.3.78* Impedance. Impedance is the ratio of the voltage drop across a circuit element to the current flowing through the same circuit element. The unit of impedance is the ohm. (ELE)

3.3.79 Incident Command System (ICS). The combination of facilities, equipment, personnel, procedures, and communications operating within a common organizational structure that has responsibility for the management of assigned resources to effectively accomplish stated objectives pertaining to an incident or training exercise. [**1670,** 2004] (HCE)

3.3.80 Instrument Air. For the purposes of this standard, instrument air is air intended for the powering of medical devices unrelated to human respiration (e.g., surgical tools, ceiling arms). Medical air and instrument air are distinct systems for mutually exclusive applications. Instrument air is a medical support gas that falls under the general requirements for medical gases. (PIP)

3.3.81 Intermittent Positive-Pressure Breathing (IPPB). Ventilation of the lungs by application of intermittent positive pressure to the airway. (GAS)

3.3.82* Intrinsically Safe. As applied to equipment and wiring, equipment and wiring that are incapable of releasing sufficient electrical energy under normal or abnormal conditions to cause ignition of a specific hazardous atmospheric mixture. (HYP)

3.3.83 Invasive Procedure. Any procedure that penetrates the protective surfaces of a patient's body (i.e., skin, mucous membrane, cornea) and that is performed with an aseptic field (procedural site). [Not included in this category are placement of peripheral intravenous needles or catheters used to administer fluids and/or medications, gastrointestinal endoscopies (i.e., sigmoidoscopies), insertion of urethral catheters, and other similar procedures.] (ELS)

3.3.84 Isolated Patient Lead. A patient lead whose impedance to ground or to a power line is sufficiently high that connecting the lead to ground, or to either conductor of the power line, results in current flow below a hazardous limit in the lead. (ELE)

3.3.85* Isolated Power System. A system comprising an isolating transformer or its equivalent, a line isolation monitor, and its ungrounded circuit conductors. (ELS)

3.3.86 Isolation Transformer. A transformer of the multiple-winding type, with the primary and secondary windings physically separated, that inductively couples its ungrounded secondary winding to the grounded feeder system that energizes its primary winding. (ELS)

3.3.87* Laboratory. A building, space, room, or group of rooms intended to serve activities involving procedures for investigation, diagnosis, or treatment in which flammable, combustible, or oxidizing materials are to be used. (LAB)

3.3.88* Laboratory Work Area. A room or space for testing, analysis, research, instruction, or similar activities that involve the use of chemicals. This work area may or may not be enclosed. (LAB)

3.3.89 Leakage Current. Any current, including capacitively coupled current, not intended to be applied to a patient, that is conveyed from exposed conductive parts of an appliance to ground or to other accessible parts of an appliance. (ELE)

3.3.90 Level 1 Medical Piped Gas and Vacuum Systems. Systems serving occupancies where interruption of the piped medical gas and vacuum system would place patients in imminent danger of morbidity or mortality. (PIP)

3.3.91 Level 1 Vacuum System. A system consisting of central-vacuum-producing equipment with pressure and operating controls, shutoff valves, alarm warning systems, gauges, and a network of piping extending to and terminating with suitable station inlets at locations where patient suction could be required. (PIP)

3.3.92 Level 2 Medical Piped Gas and Vacuum Systems. Systems serving occupancies where interruption of the piped medical gas and vacuum system would place patients at manageable risk of morbidity or mortality. (PIP)

Copyright National Fire Protection Association
Provided by IHS under license with NFPA
No reproduction or networking permitted without license from IHS
Not for Resale

3.3.93* Level 3 Compressed Air System. A system of component parts, including, but not limited to, air compressor, motor, receiver, controls, filters, dryers, valves, and piping, that delivers compressed air <1100 kPa (<160 psi gauge) to power devices (hand pieces, syringe, cleaning devices, etc.) as a power source. (PIP)

3.3.94 Level 3 Piped Gas Systems. Systems serving occupancies where interruption of the piped medical gas would terminate procedures but would not place patients at risk of morbidity or mortality. (PIP)

3.3.95* Level 3 Piped Vacuum System. A Level 3 vacuum distribution system that can be either a wet system designed to remove liquids, air–gas, or solids from the treated area; or a dry system designed to trap liquid and solids before the service inlet and to accommodate air–gas only through the service inlet. (PIP)

3.3.96 Life Safety Branch. A subsystem of the emergency system consisting of feeders and branch circuits, meeting the requirements of Article 700 of NFPA 70, *National Electrical Code*, and intended to provide adequate power needs to ensure safety to patients and personnel, and that is automatically connected to alternate power sources during interruption of the normal power source. (ELS)

3.3.97 Limited Care Facility. A building or portion of a building used on a 24-hour basis for the housing of four or more persons who are incapable of self-preservation because of age; physical limitations due to accident or illness; or limitations such as mental retardation/developmental disability, mental illness, or chemical dependency. (ADM)

3.3.98* Limited-Combustible Material. A material (as defined in NFPA 220, *Standard on Types of Building Construction*) not complying with the definition of noncombustible material that, in the form in which it is used, has a potential heat value not exceeding 8141 kJ/kg (3500 Btu/lb) and complies with one of the following: (a) materials having a structural base of noncombustible material, with a surfacing not exceeding a thickness of 3.2 mm (⅛ in.) and having a flame-spread rating not greater than 50 or (b) materials, in the form and thickness used, other than as described in (a), having neither a flame-spread rating greater than 25 nor evidence of continued progressive combustion and of such composition that surfaces that would be exposed by cutting through the material on any plane would have neither a flame-spread rating greater than 25 nor evidence of continued progressive combustion. (PIP)

3.3.99 Line Isolation Monitor. A test instrument designed to continually check the balanced and unbalanced impedance from each line of an isolated circuit to ground and equipped with a built-in test circuit to exercise the alarm without adding to the leakage current hazard. (ELS)

3.3.100* Liquid. Any material that has a fluidity greater than that of 300 penetration asphalt when tested in accordance with ASTM D 5, *Standard Test Method for Penetration of Bituminous Materials*. [**30,** 2003] (LAB)

3.3.101* Local Signal. A visible indication of the operating status of equipment. (PIP)

3.3.102 mA. Milliampere.

3.3.103 Manifold. A device for connecting the outlets of one or more gas cylinders to the central piping system for that specific gas. (PIP)

3.3.104* Manufactured Assembly. A factory-assembled product designed for aesthetics or convenience that contains medical gas or vacuum outlets, piping, or other devices related to medical gases. (PIP)

3.3.105 Mask. A device that fits over the mouth and nose (oronasal) or nose (nasal), used to administer gases to a patient. (GAS)

3.3.106* Medical Air. For purposes of this standard, medical air is air supplied from cylinders, bulk containers, medical air compressors, or has been reconstituted from oxygen USP and oil-free, dry nitrogen NF.

3.3.107 Medical Air Compressor. A compressor that is designed to exclude oil from the air stream and compression chamber and that does not under normal operating conditions or any single fault add any toxic or flammable contaminants to the compressed air. (PIP)

3.3.108* Medical/Dental Office. A building or part thereof in which the following occur: (1) Examinations and minor treatments/procedures are performed under the continuous supervision of a medical/dental professional; (2) Only sedation or local anesthesia is involved and treatment or procedures do not render the patient incapable of self-preservation under emergency conditions; (3) Overnight stays for patients or 24-hour operation are not provided. (ADM)

3.3.109 Medical Gas. A patient medical gas or medical support gas. *(See also 3.3.143, Patient Medical Gas and 3.3.111, Medical Support Gas.)* (PIP)

3.3.110 Medical Gas System. An assembly of equipment and piping for the distribution of nonflammable medical gases such as oxygen, nitrous oxide, compressed air, carbon dioxide, and helium. (PIP)

3.3.111 Medical Support Gas. Piped gases such as nitrogen and instrument air that are used to support medical procedures by operating medical–surgical tools, equipment booms, pendants, and similar medical support applications.

3.3.112 Medical–Surgical Vacuum. A method used to provide a source of drainage, aspiration, and suction in order to remove body fluids from patients. (PIP)

3.3.113 Medical–Surgical Vacuum System. An assembly of central vacuum producing equipment and a network of piping for patient suction in medical, medical–surgical, and waste anesthetic gas disposal (WAGD) applications. (PIP)

3.3.114 Multiple Treatment Facility. A diagnostic or treatment complex under a single management comprising a number of single treatment facilities, which can be accessed one from the other without exiting the facility (i.e., does not involve widely separated locations or separate distinct practices). (ADM)

3.3.115 mV. Millivolt.

3.3.116 Nasal Cannula. Device consisting of two short tubes to be inserted into the nostrils to administer oxygen or other therapeutic gases. (GAS)

3.3.117 Nasal Catheter. A flexible tube for insertion through the nose into the nasopharynx to administer oxygen or other therapeutic gases. (GAS)

3.3.118 Nebulizer. A device used for producing an aerosol of water and/or medication within inspired gas supply. (GAS)

Copyright National Fire Protection Association
Provided by IHS under license with NFPA
No reproduction or networking permitted without license from IHS
Not for Resale

3.3.119 Negative Pressure. Pressure less than atmospheric. (GAS)

3.3.120 Nitrogen. An element that, at atmospheric temperatures and pressures, exists as a clear, colorless, and tasteless gas; it comprises approximately four-fifths of the earth's atmosphere. (GAS)

3.3.120.1 ***Nitrogen NF (Oil-Free, Dry).*** Nitrogen complying as a minimum with oil-free, dry nitrogen NF. (PIP)

3.3.121* Nitrogen Narcosis. A condition resembling alcoholic inebriation, which results from breathing nitrogen in the air under significant pressure. (HYP)

3.3.122 Nitrous Oxide. An inorganic compound, one of the oxides of nitrogen. It exists as a gas at atmospheric pressure and temperature, possesses a sweetish smell, and is used for inducing anesthesia when inhaled. The oxygen in the compound will be released under conditions of combustion, creating an oxygen-enriched atmosphere. (GAS)

3.3.123 Noncombustible (Hyperbaric). An adjective describing a substance that will not burn in 95 ± 5 percent oxygen at pressures up to 3 ATA (44.1 psia). (HYP)

3.3.124 Noncombustible (Hypobaric). An adjective describing a substance that will not burn in 95 percent, plus or minus 5 percent oxygen at pressures of 101.325 kPa (760 mm Hg). (HYP)

3.3.125* Noncombustible Material. A material (as defined in NFPA 220, *Standard on Types of Building Construction*) that, in the form in which it is used and under the conditions anticipated, will not ignite, burn, support combustion, or release flammable vapors when subjected to fire or heat. (PIP)

3.3.126 Nonflammable. An adjective describing a substance that will not burn under the conditions set forth in the definition of flame resistant. (HYP)

3.3.127* Nonflammable Anesthetic Agent. Refers to those inhalation agents that, because of their vapor pressure at 37°C (98.6°F) and at atmospheric pressure, cannot attain flammable concentrations when mixed with air, oxygen, or mixtures of oxygen and nitrous oxide. (GAS)

3.3.128* Nonflammable Medical Gas System. See 3.3.110, Medical Gas System.

3.3.129 Nursing Home. A building or portion of a building used on a 24-hour basis for the housing and nursing care of four or more persons who, because of mental or physical incapacity, might be unable to provide for their own needs and safety without the assistance of another person. (ADM)

3.3.130* Oxidizing Gas. A gas that supports combustion. (HYP)

3.3.131* Oxygen. An element that, at atmospheric temperatures and pressures, exists as a colorless, odorless, tasteless gas. (GAS)

3.3.131.1 ***Gaseous Oxygen.*** A colorless, odorless, and tasteless gas; also, the physical state of the element at atmospheric temperature and pressure. (GAS)

3.3.131.2* ***Liquid Oxygen.*** Exists at cryogenic temperature, approximately −184.4°C (−300°F) at atmospheric pressure. It retains all of the properties of gaseous oxygen, but, in addition, when allowed to warm to room temperature at atmospheric pressure, it will evaporate and expand to fill a volume 860 times its liquid volume. (GAS)

3.3.132* Oxygen Delivery Equipment. Any device used to transport and deliver an oxygen-enriched atmosphere to a patient. (GAS)

3.3.133 Oxygen-Enriched Atmosphere. For the purpose of this standard, and only for the purpose of this standard, an atmosphere in which the concentration of oxygen exceeds 23.5 percent by volume. (HYP)

3.3.134 Oxygen Hood. A device encapsulating a patient's head and used for a purpose similar to that of a mask. *(See also 3.3.105, Mask.)* (HYP)

3.3.135 Oxygen Index. The minimum concentration of oxygen, expressed as percent by volume, in a mixture of oxygen and nitrogen that will just support combustion of a material under conditions of ASTM D 2863, *Standard Test Method for Measuring the Minimum Oxygen Concentration to Support Candle-Like Combustion of Plastics (Oxygen Index).* (HYP)

3.3.136* Oxygen Toxicity (Hyperbaric). Physical impairment resulting from breathing gaseous mixtures containing oxygen-enriched atmospheres at elevated partial pressures for extended periods of time. (HYP)

3.3.137 Patient Bed Location. The location of a patient sleeping bed, or the bed or procedure table of a critical care area. (ELS)

3.3.138* Patient Care Area. Any portion of a health care facility wherein patients are intended to be examined or treated. (ELE)

3.3.138.1* ***Critical Care Areas.*** Those special care units, intensive care units, coronary care units, angiography laboratories, cardiac catheterization laboratories, delivery rooms, operating rooms, postanesthesia recovery rooms, emergency departments, and similar areas in which patients are intended to be subjected to invasive procedures and connected to line-operated, patient-care–related electrical appliances.

3.3.138.2* ***General Care Areas.*** Patient bedrooms, examining rooms, treatment rooms, clinics, and similar areas in which it is intended that the patient will come in contact with ordinary appliances such as a nurse-call system, electric beds, examining lamps, telephones, and entertainment devices. (ELE)

3.3.139 Patient-Care-Related Electrical Appliance. An electrical appliance that is intended to be used for diagnostic, therapeutic, or monitoring purposes in a patient care vicinity. (ELE)

3.3.140 Patient Care Vicinity. A space, within a location intended for the examination and treatment of patients, extending 1.8 m (6 ft) beyond the normal location of the bed, chair, table, treadmill, or other device that supports the patient during examination and treatment and extending vertically to 7 ft 6 in. (2.3 m) above the floor. (ELE)

3.3.141 Patient Equipment Grounding Point. A jack or terminal that serves as the collection point for redundant grounding of electric appliances serving a patient care vicinity or for grounding other items in order to eliminate electromagnetic interference problems. (ELE)

3.3.142* Patient Lead. Any deliberate electrical connection that can carry current between an appliance and a patient. (ELE)

3.3.143 Patient Medical Gas. Piped gases such as oxygen, nitrous oxide, helium, carbon dioxide, and medical air that are used in the application of human respiration and the calibration of medical devices used for human respiration. (PIP)

Copyright National Fire Protection Association
Provided by IHS under license with NFPA
No reproduction or networking permitted without license from IHS
Not for Resale

3.3.144 Piped Distribution System. A pipeline network assembly of equipment that starts at and includes the source valve, warning systems (master, area, local alarms), bulk gas system signal actuating switch wiring, interconnecting piping, and all other components up to and including the station outlets/inlets. (PIP)

3.3.145 Piping. The tubing or conduit of the system. The three general classes of piping are main lines, risers. and branch (lateral) lines. (PIP)

3.3.145.1 ***Branch (Lateral) Lines.*** Those sections or portions of the piping system that serve a room or group of rooms on the same story of the facility. (PIP)

3.3.145.2 ***Main Lines.*** The piping that connects the source (pumps, receivers, etc.) to the risers or branches, or both. (PIP)

3.3.145.3 ***Risers.*** The vertical pipes connecting the system main line(s) with the branch lines on the various levels of the facility. (PIP)

3.3.146 Plug (Attachment Plug, Cap). A device that, by insertion in a receptacle, establishes connection between the conductors of the attached flexible cord and the conductors connected permanently to the receptacle. (ELE)

3.3.147 Positive-Negative Pressure Breathing. Ventilation of the lungs by the application of intermittent positive-negative pressure to the airway. (GAS)

3.3.148 Pressure.

3.3.148.1 ***Absolute Pressure.*** The total pressure in a system with reference to zero pressure. (HYP)

3.3.148.2 ***Ambient Pressure.*** Refers to total pressure of the environment referenced. (HYP)

3.3.148.3 ***Gauge Pressure.*** Refers to total pressure above (or below) atmospheric. (HYP)

3.3.148.4 ***High Pressure.*** A pressure exceeding 200 psig (1.38 kPa gauge) (215 psia). (GAS)

3.3.148.5* ***Partial Pressure.*** The pressure, in absolute units, exerted by a particular gas in a gas mixture. (HYP)

3.3.148.6 ***Positive Pressure.*** Pressure greater than ambient atmospheric. (GAS)

3.3.148.7* ***Working Pressure.*** A pressure not exceeding 11.6 kg/cm^2 (200 psig). (GAS)

3.3.149* Pressure-Reducing Regulator. A device that automatically reduces gas under high pressure to a usable lower working pressure. (GAS)

3.3.150 Procedure Room. Where the proceduralist is using instrumentation that requires constant observation and control.

3.3.151 psia. Pounds per square inch absolute, a unit of pressure measurement with zero pressure as the base or reference pressure. (HYP)

3.3.152* psig. Pounds per square inch gauge, a unit of pressure measurement with atmospheric pressure as the base or reference pressure. (HYP)

3.3.153 Quiet Ground. A system of grounding conductors, insulated from portions of the conventional grounding of the power system, that interconnects the grounds of electric appliances for the purpose of improving immunity to electromagnetic noise. (ELS)

3.3.154 Reactance. The component of impedance contributed by inductance or capacitance. The unit of reactance is the ohm. (ELE)

3.3.155* Reactive Material. A material that, by itself, is readily capable of detonation, explosive decomposition, or explosive reaction at normal or elevated temperatures and pressures. [**45**, 2004] (LAB)

3.3.156 Reference Grounding Point. The ground bus of the panelboard or isolated power system panel supplying the patient care area. (ELE)

3.3.157* Refrigerating Equipment. Any mechanically operated equipment used for storing, below normal ambient temperature, hazardous materials having flammability ratings of 3 or 4. (LAB)

3.3.158 Relative Analgesia. A state of sedation and partial block of pain perception produced in a patient by the inhalation of concentrations of nitrous oxide insufficient to produce loss of consciousness (conscious sedation). (GAS)

3.3.159* Remote. A Level 3 source of supply that is accessed by exiting the single or multiple treatment facility. (PIP)

3.3.160 Reserve Supply. Where existing, that portion of the supply equipment that automatically supplies the system in the event of failure of the operating supply. The reserve supply only functions in an emergency and not as a normal operating procedure. (PIP)

3.3.161 Safety Can. An approved container, of not more than 18.9 L (5 gal) capacity, having a spring-closing lid and spout cover and so designed that it will safely relieve internal pressure when subjected to fire exposure. (LAB)

3.3.162 Scavenging. An alternate term for WAGD often applied in Level 3. (PIP)

3.3.163 SCFM. Standard cubic feet per minute. (PIP)

3.3.164 Selected Receptacles. A minimal number of receptacles selected by the governing body of a facility as necessary to provide essential patient care and facility services during loss of normal power. (ELS)

3.3.165 Self-Extinguishing. A characteristic of a material such that, once the source of ignition is removed, the flame is quickly extinguished without the fuel or oxidizer being exhausted. (HYP)

3.3.166 Semipermanent Connection. A noninterchangeable connection, usually a D.I.S.S. connector, which is the termination of the pipeline and that is intended to be detached only for service. It is not the point at which the user makes connections or disconnections. (PIP)

3.3.167 Service Inlet. The pneumatic terminus of a Level 3 piped vacuum system. (PIP)

3.3.168 Service Outlet. The pneumatic terminus of a piped gas system for other than critical, continuous duty, nonflammable medical life support type gases such as oxygen, nitrous oxide, or medical air. (PIP)

3.3.169* Single Treatment Facility. A diagnostic or treatment complex under a single management comprising a number of use points, but confined to a single contiguous group of use points (i.e., does not involve widely separated locations or separate distinct practices). (PIP)

--`,,`,,,-`-`,,`,,`,`,,`---

Copyright National Fire Protection Association
Provided by IHS under license with NFPA
No reproduction or networking permitted without license from IHS
Not for Resale

3.3.170* Site of Intentional Expulsion. All points within 0.3 m (1 ft) of a point at which an oxygen-enriched atmosphere is intentionally vented to the atmosphere. (GAS)

3.3.171 Station Inlet. An inlet point in a piped medical/surgical vacuum distribution system at which the user makes connections and disconnections. (PIP)

3.3.172 Station Outlet. An outlet point in a piped medical gas distribution system at which the user makes connections and disconnections. (PIP)

3.3.173 Supply Source.

3.3.173.1 ***Operating Supply.*** The portion of the supply system that normally supplies the piping systems. The operating supply consists of a primary supply or a primary and secondary supply. (PIP)

3.3.173.2 ***Primary Supply.*** That portion of the source equipment that actually supplies the system. (PIP)

3.3.173.3 ***Reserve Supply.*** Where provided, that portion of the source equipment that automatically supplies the system in the event of failure of the primary and secondary operating supply. (PIP)

3.3.173.4 ***Secondary Supply.*** Where provided, that portion of the source equipment that automatically supplies the system when the primary supply becomes exhausted. (PIP)

3.3.174 Support Gas. Nitrogen or instrument air that is used to support medical procedures by operating medical–surgical tools, equipment booms, pendants, and similar devices, and are not respired as part of any treatment. (PIP)

3.3.175* Surface-Mounted Medical Gas Rail Systems. A surface-mounted gas delivery system intended to provide ready access for two or more gases through a common delivery system to provide multiple gas station outlet locations within a single patient room or critical care area. (PIP)

3.3.176 Task Illumination. Provisions for the minimum lighting required to carry out necessary tasks in the areas described in Chapter 4, including safe access to supplies and equipment and access to exits. (ELS)

3.3.177 Terminal. The end of a flexible hose or tubing used in a manufactured assembly where the user is intended to make connection and disconnection. (PIP)

3.3.178 Tube.

3.3.178.1* ***Endotracheal Tube.*** A tube for insertion through the mouth or nose into the upper portion of the trachea (windpipe). (GAS)

3.3.178.2* ***Tracheotomy Tube.*** A curved tube for insertion into the trachea (windpipe) below the larynx (voice box) during the performance of an appropriate operative procedure (tracheotomy). (GAS)

3.3.179* Unattended Laboratory Operation. A laboratory procedure or operation at which there is no person present who is knowledgeable regarding the operation and emergency shutdown procedures. [**45**, 2004] (LAB)

3.3.180 Use Point. A location with any number of station outlets and inlets arranged for access by a practitioner during treatment of a patient. (PIP)

3.3.181* Utility Center (J box). A type of terminal enclosure for utilities (e.g., gas power, vacuum, water, electrical power) used in office-based occupancies. (PIP)

3.3.182 Vaporizer. A heat exchange unit designed to convert cryogenic liquid into the gaseous state. (PIP)

3.3.183* WAGD Interface. A device provided on the anesthesia gas machine that connects the WAGD network to the patient breathing circuit. (PIP)

3.3.184 Waste Anesthetic Gas Disposal (WAGD). The process of capturing and carrying away gases vented from the patient breathing circuit during the normal operation of gas anesthesia or analgesia equipment. (PIP)

3.3.185* Wet Locations. The area in a patient care area where a procedure is performed that is normally subject to wet conditions while patients are present including standing fluids on the floor or drenching of the work area, either of which condition is intimate to the patient or staff. (ADM)

Chapter 5 Gas and Vacuum Systems

5.1 Level 1 Piped Gas and Vacuum Systems.

5.1.1* Applicability.

5.1.1.1 These requirements shall apply to health care facilities that require Level 1 systems as referenced in Chapters 13 through 21.

5.1.1.2* Wherever the terms *medical gas* or *vacuum* occur, the provisions shall apply to all piped systems for oxygen, nitrous oxide, medical air, carbon dioxide, helium, medical–surgical vacuum, waste anesthetic gas disposal, and mixtures thereof. Wherever the name of a specific gas or vacuum service occurs, the provision shall apply only to that gas.

5.1.1.3 Wherever the term *medical–surgical vacuum* occurs, the provisions shall apply to systems for piped medical–surgical vacuum and piped waste anesthetic gas disposal (WAGD). Wherever the name of a specific vacuum service occurs, the provision shall apply only to that vacuum service.

5.1.1.4 An existing system that is not in strict compliance with the provisions of this standard shall be permitted to be continued in use as long as the authority having jurisdiction has determined that such use does not constitute a distinct hazard to life.

5.1.2 Nature of Hazards of Gas and Vacuum Systems. Potential fire and explosion hazards associated with positive pressure gas central piping systems and medical–surgical vacuum systems shall be considered in the design, installation, testing, operation, and maintenance of these systems.

5.1.3* Level 1 Sources.

5.1.3.1 Central Supply System Identification and Labeling.

5.1.3.1.1* Only cylinders and containers constructed, tested, and maintained in accordance with U.S. Department of Transportation specifications and regulations shall be permitted to be used.

5.1.3.1.2 Cylinder contents shall be identified by attached labels or stencils naming the contents in accordance with CGA C-7, *Guide to the Preparation of Precautionary Labeling and Marking of Compressed Gas Containers.*

5.1.3.1.3 Liquid containers shall have additional product identification visible from all directions with a minimum of 51 mm (2 in.) high letters such as a 360 degree wraparound tape for medical liquid containers.

Copyright National Fire Protection Association
Provided by IHS under license with NFPA
No reproduction or networking permitted without license from IHS
Not for Resale

5.1.3.1.4 Cryogenic liquid containers shall be provided with gas-specific outlet connections in accordance with CGA V-5, *Diameter-Index Safety System (Noninterchangeable Low Pressure Connections for Medical Gas Applications)*, or CGA V-1, *Compressed Gas Association Standard for Compressed Gas Cylinder Valve Inlet and Outlet Connections.*

5.1.3.1.5 Cylinder and cryogenic liquid container outlet connections shall be affixed in such a manner as to be integral to the valve(s), unremovable with ordinary tools or so designed as to render the attachment point unusable when removed.

5.1.3.1.6 Contents of cylinders and cryogenic liquid containers shall be verified prior to use.

5.1.3.1.7 Labels shall not be defaced, altered, or removed, and connecting fittings shall not be modified.

5.1.3.1.8 Locations containing positive pressure gases other than oxygen and medical air shall have their door(s) labeled substantially as follows:

CAUTION

Positive Pressure Gases

NO Smoking or Open Flame

Room May Have Insufficient Oxygen

Open Door and Allow Room to Ventilate Before Entering

5.1.3.1.9 Locations containing central supply systems or cylinders containing only oxygen or medical air shall have their door(s) labeled as follows:

CAUTION

Medical Gases

NO Smoking or Open Flame

5.1.3.2 Central Supply System Operations.

5.1.3.2.1 The use of adapters or conversion fittings to adapt one gas-specific fitting to another shall be prohibited.

5.1.3.2.2 Cylinders and containers shall be handled in strict accordance with 5.1.13.

5.1.3.2.3 Only gas cylinders, reusable shipping containers, and their accessories shall be permitted to be stored in rooms containing central supply systems or gas cylinders.

5.1.3.2.4 No flammable materials, cylinders containing flammable gases, or containers containing flammable liquids shall be stored in rooms with gas cylinders.

5.1.3.2.5 Wooden racks for cylinder storage shall be permitted.

5.1.3.2.6 If cylinders are wrapped when received, the wrappers shall be removed prior to storage.

5.1.3.2.7 Cylinders not in use shall have their valve protection caps secured tightly in place.

5.1.3.2.8 Cylinders without correct markings or whose markings and gas-specific fittings do not match shall not be used.

5.1.3.2.9 Cryogenic liquid storage units intended to supply gas to the facility shall not be used to transfill other liquid storage vessels.

5.1.3.2.10 Care shall be exercised when handling cylinders that have been exposed to freezing temperatures or containers that contain cryogenic liquids to prevent injury to the skin.

5.1.3.2.11 Cylinders containing compressed gases and containers for volatile liquids shall be kept away from radiators, steam piping, and like sources of heat.

5.1.3.2.12 When cylinder valve protection caps are supplied, they shall be secured tightly in place unless the cylinder is connected for use.

5.1.3.2.13 Containers shall not be stored in a tightly closed space.

5.1.3.3* Central Supply System Locations.

5.1.3.3.1 Central supply systems shall be located to meet the criteria in 5.1.3.3.1.1 through 5.1.3.3.1.12.

5.1.3.3.1.1 Any of the following systems shall be permitted to be located together in the same outdoor enclosure:

(1) Manifolds for gas cylinders without reserve supply *(See 5.1.3.4.10.)*
(2) Manifolds for gas cylinders with reserve supply
(3) Manifolds for cryogenic liquid containers *(See 5.1.3.4.12.)*
(4) Bulk cryogenic liquid systems *(See 5.1.3.4.13.)*

5.1.3.3.1.2 Any of the following systems shall be permitted to be located together in the same indoor enclosure:

(1) Manifolds for gas cylinders without reserve supply *(See 5.1.3.4.10.)*
(2) Manifolds for gas cylinders with reserve supply
(3) Manifolds for cryogenic liquid containers *(See 5.1.3.4.12.)*
(4) In-building emergency reserves *(See 5.1.3.4.15.)*
(5) Instrument air standby headers *(See 5.1.3.8.5.)*

5.1.3.3.1.3 Any of the following systems shall be permitted to be located together in the same room:

(1) Medical air compressor supply sources *(See 5.1.3.5.3.)*
(2) Medical–surgical vacuum sources *(See 5.1.3.6.)*
(3) Waste anesthetic gas disposal (WAGD) sources *(See 5.1.3.7.)*
(4) Instrument air compressor sources *(See 5.1.3.8.)*
(5) Any other compressor, vacuum pump, or electrically powered machinery

5.1.3.3.1.4 Any system listed under 5.1.3.3.1.3 shall not be located in the same room with any system listed under 5.1.3.3.1.1 or 5.1.3.3.1.2, except instrument air reserve headers complying with 5.1.3.3.1.7 and 5.1.3.8.5 shall be allowed to be in the same room as an instrument air compressor.

5.1.3.3.1.5 Locations shall be chosen to permit access by delivery vehicles and management of cylinders (e.g., proximity to loading docks, access to elevators, passage of cylinders through public areas).

5.1.3.3.1.6 Indoor locations for oxygen, nitrous oxide, and mixtures of these gases shall not communicate with the following:

(1) Areas involved in critical patient care
(2) Anesthetizing locations
(3) Locations storing flammables
(4) Rooms containing open electrical contacts or transformers
(5) Storage tanks for flammable or combustible liquids
(6) Engines
(7) Kitchens
(8) Areas with open flames

--`,,`,,-`-`,,`,,`,`,,`---

Copyright National Fire Protection Association
Provided by IHS under license with NFPA
No reproduction or networking permitted without license from IHS
Not for Resale

5.1.3.3.1.7 Cylinders in use and in storage shall be prevented from reaching temperatures in excess of 54°C (130°F).

5.1.3.3.1.8 Central supply systems for nitrous oxide and carbon dioxide using cylinders or portable containers shall be prevented from reaching temperatures lower than the recommendations of the central supply system's manufacturer, but shall never be lower than –7°C (20°F) or greater than 54°C (130°F).

5.1.3.3.1.9 Central supply systems for oxygen with a total capacity connected and in storage of 566,335 L (20,000 ft^3) or more at standard temperature and pressure (STP) shall comply with NFPA 50, *Standard for Bulk Oxygen Systems at Consumer Sites*.

5.1.3.3.1.10 Central supply systems for nitrous oxide with a total capacity connected and in storage of 1451 kg (3200 lb) or more shall comply with CGA G-8.1, *Standard for Nitrous Oxide Systems at Consumer Sites*.

5.1.3.3.1.11 Central supply systems for carbon dioxide using permanently installed containers with product capacities greater than 454 kg (1000 lb) shall comply with CGA G-6.1, *Standard for Insulated Carbon Dioxide Systems at Consumer Sites*.

5.1.3.3.1.12 Central supply systems for carbon dioxide using permanently installed containers with product capacities of 454 kg (1000 lb) or less shall comply with CGA G-6.5, *Standard for Small, Stationary, Insulated Carbon Dioxide Supply Systems*.

5.1.3.3.2* Design and Construction. Locations for central supply systems and the storage of positive pressure gases shall meet the following requirements:

(1) Be constructed with access to move cylinders, equipment, and so forth, in and out of the location on hand trucks complying with 9.5.3.1.1 of NFPA 99
(2) Be secured with lockable doors or gates or otherwise secured
(3) If outdoors, be provided with an enclosure (wall or fencing) constructed of noncombustible materials
(4) If indoors, be constructed and use interior finishes of noncombustible or limited-combustible materials such that all walls, floors, ceilings and doors are of a minimum 1-hour fire resistance rating
(5) Be compliant with NFPA 70, *National Electrical Code*, for ordinary locations, with electrical devices located at or above 1520 mm (5 ft) above finished floor to avoid physical damage
(6) Be heated by indirect means (e.g., steam, hot water), if heat is required
(7) Be provided with racks, chains, or other fastenings to secure all cylinders, whether connected, unconnected, full, or empty, from falling
(8) Be supplied with electrical power compliant with the requirements for essential electrical systems as described in Chapter 4 of NFPA 99
(9) Have racks, shelves, and supports, where provided, constructed of noncombustible materials or limited-combustible materials

5.1.3.3.3 Ventilation.

5.1.3.3.3.1 Ventilation of Locations for Manifolds. Locations containing central supply systems or used for storing medical gas containers shall be ventilated to prevent the accumulation of medical gases from leaks and operation of cylinder or manifold overpressure safety devices in accordance with 5.1.3.3.3.1(A) through 5.1.3.3.3.1(G).

(A) Indoor supply systems shall have all relief valves vented per 5.1.3.4.6.1(4) through 5.1.3.4.6.1(9).

(B) Where the total volume of medical gases connected and in storage is greater than 84,950 L (3000 ft^3) at STP, indoor supply locations shall be provided with dedicated mechanical ventilation systems that draw air from within 300 mm (1 ft) of the floor and operate continuously. A means of makeup air shall be provided.

(C) The power supply for mechanical ventilation fans shall conform to the requirements of an essential electrical system as described in Chapter 4 of NFPA 99.

(D) Where the total volume of medical gases connected and in storage is less than 84,950 L (3000 ft^3) at STP or the only compressed gas in the room is medical air, natural ventilation shall be permitted to be employed.

(E) Where natural ventilation is permitted, it shall consist of two louvered openings, each having a minimum free area of 46,500 mm^2 (72 $in.^2$), with one located within 300 mm (1 ft) of the floor and one located within 300 mm (1 ft) of the ceiling.

(F) Louvered natural ventilation openings shall not be located in an exit access corridor.

(G) Mechanical ventilation shall be provided if the requirements of 5.1.3.3.3.1(F) cannot be met.

5.1.3.3.3.2 Ventilation for Motor Driven Equipment. The following source locations shall be adequately ventilated to prevent accumulation of heat:

(1) Medical air sources *(See 5.1.3.5.)*
(2) Medical–surgical vacuum sources *(See 5.1.3.6.)*
(3) Waste anesthetic gas disposal (WAGD) sources *(See 5.1.3.7.1.)*
(4) Instrument air sources *(See 5.1.3.8.)*

5.1.3.3.3.3 Ventilation for Outdoor Locations. Outdoor locations surrounded by impermeable walls shall have protected ventilation openings located at the base of each wall to allow free circulation of air within the enclosure. Walls that are shared with other enclosures or with buildings shall be permitted to not have openings.

5.1.3.3.4 Storage.

5.1.3.3.4.1 Full or empty medical gas cylinders, when not connected, shall be stored in locations complying with 5.1.3.3.2 through 5.1.3.3.3 and shall be permitted to be in the same rooms or enclosures as their respective central supply systems.

5.1.3.3.4.2 Cylinders, whether full or empty, shall not be stored in enclosures containing medical air compressor sources, medical vacuum supply systems, or WAGD supply systems. Only cylinders intended for instrument air reserve headers complying with 5.1.3.8.5 shall be permitted to be stored in enclosures containing instrument air compressors.

5.1.3.4* Central Supply Systems. Central supply systems shall be permitted to consist of the following:

(1) Cylinder manifolds for gas cylinders per 5.1.3.4.10
(2) Manifolds for cryogenic liquid containers per 5.1.3.4.12
(3) Bulk cryogenic liquid systems per 5.1.3.4.13
(4) Medical air compressor systems per 5.1.3.5
(5) Medical–surgical vacuum producers per 5.1.3.6
(6) WAGD producers per 5.1.3.7
(7) Instrument air compressor systems per 5.1.3.8

Copyright National Fire Protection Association
Provided by IHS under license with NFPA
No reproduction or networking permitted without license from IHS
Not for Resale

5.1.3.4.1 Central supply systems shall be obtained from a supplier or manufacturer familiar with their proper construction and use and installed in accordance with the manufacturer's instructions.

5.1.3.4.2* Central supply systems for oxygen, medical air, nitrous oxide, carbon dioxide, and all other patient medical gases shall not be piped to, or used for, any purpose except patient care application. Medical air shall be used only in the application of human respiration, and calibration of medical devices for respiratory application.

5.1.3.4.3 Central supply systems for support gases shall not be piped to, or used for, any purpose except medical support application.

5.1.3.4.4* Materials used in central supply systems shall meet the following requirements:

(1) In those portions of systems intended to handle oxygen at gauge pressures greater than 2070 kPa (300 psi), interconnecting hose shall contain no polymeric materials.
(2) In those portions of systems intended to handle oxygen or nitrous oxide at gauge pressures of less than 2070 kPa (300 psi), material construction shall be compatible with oxygen under the temperatures and pressures to which the components can be exposed in the containment and use of oxygen, nitrous oxide, mixtures of these gases, or mixtures containing more than 23.5 percent oxygen.
(3) If potentially exposed to cryogenic temperatures, materials shall be designed for low temperature service.
(4) If intended for outdoor installation, materials shall be installed per the manufacturer's requirements.

5.1.3.4.5 Final Line Pressure Regulators.

5.1.3.4.5.1 All positive pressure central supply systems shall be provided with duplex final line pressure regulators, installed in parallel with isolation valves before each regulator, and an isolation or check valve after each regulator permitting service to either regulator without interruption of supply.

5.1.3.4.5.2 The line pressure regulators required under 5.1.3.4.5.1 when used for bulk cryogenic liquid systems shall be of a balanced design.

5.1.3.4.5.3 A pressure indicator(s) shall be located downstream (patient or use side) of each regulator or immediately downstream of the isolating valves for the regulators.

5.1.3.4.6 Relief Valves.

5.1.3.4.6.1 All pressure relief valves shall meet the following requirements:

(1) Be of brass, bronze, or stainless steel construction
(2) Be designed for the specific gas service
(3) Have a relief pressure setting not higher than the maximum allowable working pressure (MAWP) of the component with lowest working pressure rating in the portion of the system being protected
(4) Be vented to the outside of the building, except that relief valves for compressed air systems having less than 84,950 L (3000 ft^3) at STP shall be permitted to be diffused locally by means that will not restrict the flow
(5) Have a vent discharge line that is not smaller than the size of the relief valve outlet
(6) Where two or more relief valves discharge into a common vent line, its internal cross-sectional area shall be not less than the aggregate cross-sectional area of all relief valve vent discharge lines served
(7) Shall not discharge into locations creating potential hazards
(8) Have the discharge terminal turned down and screened to prevent the entry of rain, snow, or vermin
(9) Shall be designed in accordance with ASME B31.3, *Pressure Process Piping*

5.1.3.4.6.2 When vented to outdoors, materials and construction for relief valve discharge lines shall be the same as required for positive pressure gas distribution *(see 5.1.10.1)*.

5.1.3.4.6.3 Central supply systems for positive pressure gases shall include one or more relief valves, all meeting the following requirements:

(1) Be located between each final line regulator and the source valve
(2) Have a relief setting that is 50 percent above the normal system operating pressure, as indicated in Table 5.1.11

5.1.3.4.6.4 When vented outside, relief valve vent lines shall be labeled in accordance with 5.1.11.1, in any manner that will distinguish them from the medical gas pipeline.

5.1.3.4.7 Multiple Pressures. Where a single central supply system supplies separate piped distribution networks operating at different pressures, each piped distribution network shall comply with the following:

(1) Medical air compressor systems: 5.1.3.5.9 (pressure regulators) and 5.1.9.2.4(7) (master alarm)
(2) All central supply systems: 5.1.3.4.5 (pressure regulators), 5.1.3.4.6 (relief valves), 5.1.4.4 (source valve), 5.1.9.2.4(7) (master alarm)

5.1.3.4.8 Local Signals.

5.1.3.4.8.1 The following systems shall have local signals located at the source equipment:

(1) Manifolds for gas cylinders without reserve supply *(See 5.1.3.4.10.)*
(2) Manifolds for gas cylinders with reserve supply
(3) Manifolds for cryogenic liquid containers *(See 5.1.3.4.12.)*
(4) Bulk cryogenic liquid systems *(See 5.1.3.4.13.)*
(5) In-building emergency reserves *(See 5.1.3.4.15.)*
(6) Instrument air headers *(See 5.1.3.4.9.)*

5.1.3.4.8.2 The local signals shall meet the following requirements:

(1) Provide visual indication only
(2) Be labeled for the service and condition being monitored
(3) If intended for outdoor installation, be installed per manufacturer's requirements

5.1.3.4.9* Headers. In central supply systems using cylinders containing either gas or liquid, each header shall include the following:

(1)*Cylinder connections in the number required for the header's application
(2) A cylinder lead for each cylinder constructed of materials complying with 5.1.3.4.4 and provided with end fittings permanently attached to the cylinder lead complying with CGA V-1, *Standard for Compressed Gas Cylinder Valve Outlet and Inlet Connections* (ANSI B57.1)
(3) A filter of a material complying with 5.1.3.4.4 to prevent the intrusion of debris into the manifold controls

Copyright National Fire Protection Association
Provided by IHS under license with NFPA
No reproduction or networking permitted without license from IHS
Not for Resale

(4) A header shutoff valve downstream of the nearest cylinder connection, but upstream of the point at which the header connects to the central supply system
(5) A pressure indicator indicating the pressure of header contents
(6) A check valve to prevent backflow into the header and to permit service to the header
(7) If intended for gas cylinder service, a check valve at each connection for the cylinder lead in 5.1.3.4.9(2) to prevent loss of gas in the event of damage to the cylinder lead or operation of an individual cylinder relief valve
(8) If intended for gas cylinder service, a pressure regulator to reduce the cylinder pressure to an intermediate pressure to permit the proper operation of the primary and secondary headers
(9) If intended for service with cryogenic liquid containers, a pressure relief valve
(10) Vent valves, if fitted on a header, shall be vented outside of the building per 5.1.3.4.6.1(5) through 5.1.3.4.6.1(9) and 5.1.3.4.6.2.

5.1.3.4.10* Manifolds for Gas Cylinders without Reserve Supply.

5.1.3.4.10.1 The manifolds in this category shall be located in accordance with 5.1.3.3.1 and the following:

(1) If located outdoors, be installed in an enclosure used only for this purpose and sited to comply with minimum distance requirements in Figure 5.1.3.4.10.1
(2) If located indoors, be installed within a room used only for this purpose

5.1.3.4.10.2 The manifold locations in this category shall be constructed in accordance with 5.1.3.3.2.

5.1.3.4.10.3 The manifold locations in this category shall be ventilated in accordance with 5.1.3.3.3.

5.1.3.4.10.4 The manifolds in this category shall consist of the following:

(1) Two equal headers in accordance with 5.1.3.4.9, each with a sufficient number of gas cylinder connections for an average day's supply, but not fewer than two connections, and with the headers connected to the final line pressure regulator assembly in such a manner that either header may supply the system
(2) Vent valves, if fitted on a header, vented outside of the building per 5.1.3.4.6.1(5) through 5.1.3.4.6.1(9) and 5.1.3.4.6.2
(3) An intermediate relief valve(s), piped to the outside in accordance with 5.1.3.4.6.1(5) through 5.1.3.4.6.1(9), that protects the piping between the header pressure regulator and the line pressure regulator assembly, and protects the line pressure regulators from overpressure in the event of a header regulator failure

5.1.3.4.10.5 The manifolds in this category shall include an automatic means of alternating the two headers to accomplish the following in normal operation:

(1) One header is the primary and the other is the secondary, with either being capable of either role.
(2) When the primary header is supplying the system, the secondary header is prevented from supplying the system.
(3) When the primary header is depleted, the secondary header automatically begins to supply the system.

5.1.3.4.10.6 The manifolds in this category shall actuate a local signal and shall activate an indicator at all master alarm panels when or at a predetermined set point before the secondary header begins to supply the system, indicating changeover has occurred or is about to occur.

5.1.3.4.10.7 If manifolds are located out of doors, they shall be installed per the manufacturer's requirements.

5.1.3.4.11 Manifolds for Gas Cylinders with Reserve Supply. See Figure 5.1.3.4.10.1.

5.1.3.4.11.1 The manifolds in this category shall be located in accordance with 5.1.3.3.1 and the following:

(1) If located outdoors, be installed in an enclosure used only for this purpose and sited to comply with minimum distance requirements in Figure 5.1.3.4.10.1
(2) If located indoors, be installed within a room used only for this purpose

5.1.3.4.11.2 The manifolds in this category shall have their primary and secondary headers located in the same enclosure.

5.1.3.4.11.3 The reserve header shall be permitted to be located in the same enclosure as the primary and secondary headers or in another enclosure compliant with 5.1.3.4.11.1.

5.1.3.4.11.4 The manifold locations in this category shall be constructed in accordance with 5.1.3.3.2.

5.1.3.4.11.5 The manifold locations in this category shall be ventilated in accordance with 5.1.3.3.3.

5.1.3.4.11.6 The manifolds in this category shall consist of the following:

(1) Two equal headers per 5.1.3.4.9 each having sufficient number of gas cylinder connections for an average day's supply, but not fewer than two connections, and with the headers connected to the final line pressure regulator assembly in such a manner that either header may supply the system
(2) A reserve header per 5.1.3.4.9 having sufficient number of gas cylinder connections for an average day's supply, but not fewer than three connections, and connected downstream of the primary/secondary headers and upstream of the final line pressure regulators
(3) An intermediate relief valve(s), piped to the outside in accordance with 5.1.3.4.6.1(5) through 5.1.3.4.6.1(9), that protects the line pressure regulators from overpressure in the event of a header regulator failure

5.1.3.4.11.7 The manifolds in this category shall include an automatic means of controlling the three headers to accomplish the following during normal operation:

(1) One gas cylinder header is the primary and the other is the secondary, with either capable of either role.
(2) When the primary header is supplying the system, the secondary header is prevented from supplying the system.
(3) When the primary header is depleted, the secondary header automatically begins to serve the system.

5.1.3.4.11.8 The manifolds in this category shall include a manual or automatic means to place either header into the role as primary header and the other in the role of secondary header.

5.1.3.4.11.9 The manifolds in this category shall include a means to automatically activate the reserve header if for any reason the primary and secondary headers cannot supply the system.

Copyright National Fire Protection Association
Provided by IHS under license with NFPA
No reproduction or networking permitted without license from IHS
Not for Resale

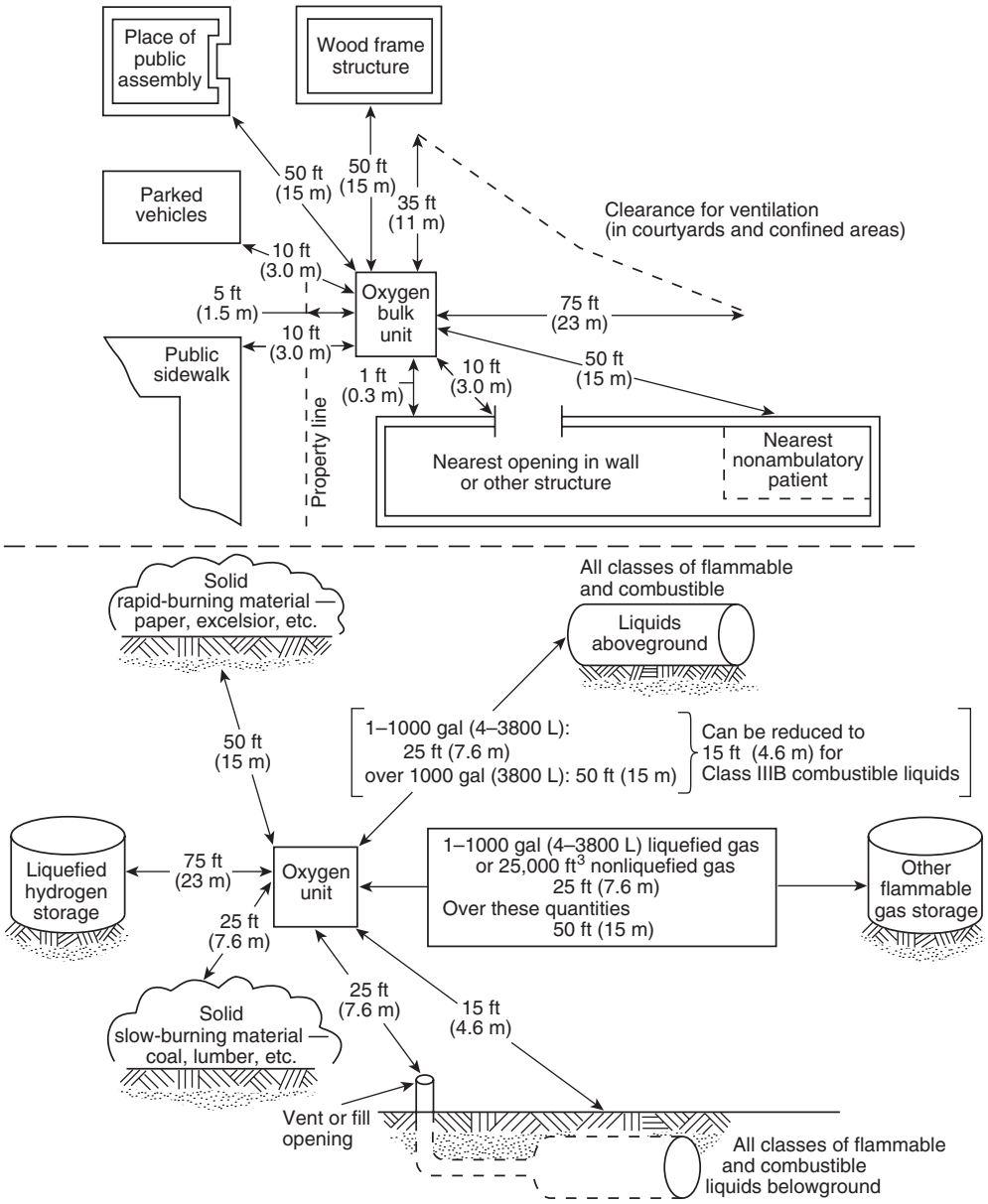

FIGURE 5.1.3.4.10.1 Distance Between Bulk Oxygen Systems and Exposures.

5.1.3.4.11.10 The manifolds in this category shall actuate a local signal and shall activate an indicator at all master alarms under the following conditions:

(1) When or at a predetermined set point before the secondary header begins to supply the system, indicating changeover
(2) When or at a predetermined set point before the reserve header begins to supply the system, indicating reserve is in use
(3) When or at a predetermined set point before the reserve header contents fall to one day's supply, indicating reserve low

5.1.3.4.11.11 If manifolds in this category are located outdoors, they shall be installed per manufacturer's requirements.

5.1.3.4.12* Manifolds for Cryogenic Liquid Containers.

5.1.3.4.12.1 The manifolds in this category shall be located in accordance with 5.1.3.3.1 and the following:

(1) If located outdoors, be installed in an enclosure used only for this purpose and sited to comply with minimum distance requirements in Figure 5.1.3.4.10.1
(2) If located indoors, be installed within a room used only for this purpose

5.1.3.4.12.2 The manifolds in this category shall have their primary and secondary headers located in the same enclosure.

5.1.3.4.12.3 The reserve header shall be permitted to be located in the same enclosure as the primary and secondary headers or in another enclosure compliant with 5.1.3.4.12.1.

Copyright National Fire Protection Association
Provided by IHS under license with NFPA
No reproduction or networking permitted without license from IHS
Not for Resale

5.1.3.4.12.4 The manifolds in this category shall consist of the following:

(1) Two equal headers, per 5.1.3.4.9, each having sufficient number of liquid container connections for an average day's supply, and with the headers connected to the final line pressure regulator assembly in such a manner that either header may supply the system
(2) A reserve header, per 5.1.3.4.9, having sufficient number of gas cylinder connections for an average day's supply, but not fewer than three connections, and connected downstream of the primary/secondary headers and upstream of the final line pressure regulators
(3) A pressure relief installed downstream of the connection of the reserve header and upstream of the final line pressure regulating assembly and set at 50 percent above the nominal inlet pressure

5.1.3.4.12.5 The manifolds in this category shall include an automatic means of controlling the three headers to accomplish the following during normal operation:

(1) If provided with two liquid container headers, one cryogenic liquid header is the primary and the other is the secondary, with either being capable of either role.
(2) If provided with one liquid container header and one gas cylinder header (a hybrid arrangement), the liquid header is the primary and the gas cylinder header is the secondary.
(3) When the primary header is supplying the system, the secondary header is prevented from supplying the system.
(4) When the primary header is depleted, the secondary header automatically begins to supply the system.

5.1.3.4.12.6 The manifolds in this category shall be equipped with a means to conserve the gas produced by evaporation of the cryogenic liquid in the secondary header (when so provided). This mechanism shall discharge the conserved gas into the system upstream of the final line regulator assembly.

5.1.3.4.12.7 The manifolds in this category shall include a manual or automatic means to place either header into the role as primary header and the other in the role of secondary header, except where a liquid/gas hybrid manifold is employed.

5.1.3.4.12.8 The manifolds in this category shall include a means to automatically activate the reserve header if for any reason the primary and secondary headers cannot supply the system.

5.1.3.4.12.9 The manifolds in this category shall actuate a local signal and shall activate an indicator at all master alarms under the following conditions:

(1) When or at a predetermined set point before the secondary header begins to supply the system, indicating changeover
(2) Where a hybrid arrangement is employed, when or at a predetermined set point before the secondary (cylinder) header contents fall to one day's average supply, indicating secondary low
(3) When or at a predetermined set point before the reserve header begins to supply the system, indicating reserve is in use
(4) When or at a predetermined set point before the reserve header contents fall to one day's average supply, indicating reserve low

5.1.3.4.12.10 A variant on the cryogenic liquid container manifold shall be permitted having three headers of cylinders. Such a variant shall comply with all requirements of 5.1.3.4.12, except:

(1) The minimum number of cylinder connections required for each header under 5.1.3.4.12.4(1) shall be two.
(2) Paragraph 5.1.3.4.12.6 shall not apply.

5.1.3.4.13* Bulk Cryogenic Liquid Systems.

5.1.3.4.13.1 Bulk cryogenic liquid systems shall have the following protections:

(1) Oxygen systems compliant with NFPA 50, *Standard for Bulk Oxygen Systems at Consumer Sites*; NFPA 55, *Standard for the Storage, Use, and Handling of Compressed Gases and Cryogenic Fluids in Portable and Stationary Containers, Cylinders, and Tanks*; or Chapter 9, Bulk Oxygen Systems, of NFPA 50, 1996 edition.
(2) Location in an enclosure constructed per 5.1.3.3.2(1) through 5.1.3.3.2(3) and 5.1.3.3.2(5), 5.1.3.3.2(8), and 5.1.3.3.2(9)
(3) Location in an enclosure ventilated per 5.1.3.3.3.3
(4) Location in compliance with CGA M-1, *Guide for Medical Gas Installations at Consumer Sites*
(5) Design such that the items noted in 5.1.3.4.13.2 and items located in trailer unloading area are readily visible to delivery personal during filling operations
(6) Protection against overpressurization of the pressure vessel during filling operations
(7) Installation per 5.1.10.1 through 5.1.10.5.7
(8) Installation by personnel qualified to meet CGA M-1, *Guide for Medical Gas Installations at Consumer Sites*
(9) Installation in compliance with Food and Drug Administration (FDA) Current Good Manufacturing Practices as found in 21 CFR 210 and 21 CFR 211

5.1.3.4.13.2 The following components of the bulk system shall be readily accessible to delivery personnel:

(1) Fill connection
(2) Top and bottom fill valves
(3) Hose purge valve
(4) Vent valve
(5) Full try/cock
(6) Liquid level gauge
(7) Tank pressure gauge

5.1.3.4.13.3 Bulk cryogenic liquid system sites shall include the following:

(1) A poured concrete pad, designed for the weight, dynamic loads, wind loads, and surface loading, and complying with local seismic requirements
(2) Permanent anchors holding the components to the pad in accordance with the design requirements
(3) A complete enclosure as per 5.1.3.3.2(3)
(4) Concrete or crushed stone completely filling the enclosed space.
(5) A vehicle pad for the delivery vehicle that is compliant with NFPA 50, *Standard for Bulk Oxygen Systems at Consumer Sites*, and readily accessible for refilling supply as stated in CGA M-1, *Guide for Medical Gas Installations at Consumer Sites*
(6) Allowance for at least 1 m (3 ft) of clearance around storage container, vaporizer(s), and pressure-regulating manifold for system maintenance and operation

5.1.3.4.13.4 The equipment pad and vehicle pad shall:

(1) Be sloped to provide that all drainage run away from any building, parked vehicles, or combustible materials.
(2) Have no drain located within the pad or closer than 2450 mm (8 ft) from the edge of the pad.

Copyright National Fire Protection Association
Provided by IHS under license with NFPA
No reproduction or networking permitted without license from IHS
Not for Resale

5.1.3.4.13.5 Bulk cryogenic liquid sources shall consist of the following:

(1) One or more main supply vessel(s), whose capacity shall be determined after consideration of the customer usage requirements, delivery schedules, proximity of the facility to alternate supplies, and the emergency plan
(2) A contents gauge on each of the main vessel(s)
(3) A reserve supply sized for greater than an average day's supply, with the appropriate size of vessel or number of cylinders being determined after consideration of delivery schedules, proximity of the facility to alternate supplies, and the facility's emergency plan
(4) At least two main vessel relief valves and rupture discs installed downstream of a three-way (three-port) valve
(5) A check valve located in the primary supply piping upstream of the intersection with a secondary supply or reserve supply

5.1.3.4.13.6 Bulk cryogenic liquid sources shall include a reserve supply, as follows:

(1) A second cryogenic liquid vessel or a cylinder header per 5.1.3.4.9 having sufficient gas cylinder connections for an average day's supply, but not fewer than three
(2) An actuating switch/sensor monitoring internal pressure of the reserve cryogenic liquid vessel (if provided)
(3) A contents gauge monitoring liquid level in the reserve cryogenic liquid vessel (if provided)
(4) A check valve to prevent backflow into the reserve system
(5) A pressure switch monitoring the pressure in the cylinder header (if provided)

5.1.3.4.13.7 Bulk cryogenic liquid sources shall include a fill circuit consisting of the following components:

(1) A nonremovable product-specific fill connection in compliance with CGA V-6, *Standard Cryogenic Liquid Transfer Connection*
(2) A means to cap and secure the fill connection inlet
(3) A minimum 100 mesh strainer of Monel® or brass construction
(4) A check valve to prevent product backflow from the fill inlet
(5) A fill hose purge valve
(6) Supports that hold the fill piping off the ground
(7) A secure connection between the bulk tank and the fill piping
(8) Supports as necessary to hold the fill line in position during all operations associated with the filling procedure

5.1.3.4.13.8 Bulk cryogenic liquid sources shall include automatic means to provide the following functions:

(1) When the main supply is supplying the system, the reserve supply shall be prevented from supplying the system until the main supply is reduced to a level at or below the reserve activation pressure.
(2) When the main supply cannot supply the system, the reserve supply shall automatically begin to supply the system.
(3) Where there is more than one main supply vessel, the system shall operate as described in 5.1.3.4.12 for primary, secondary, and reserve operation.
(4) Where there are two or more cryogenic vessels, they shall be permitted to alternate (e.g., on a timed basis) in the roles of primary, secondary, and reserve, providing an operating cascade (primary–secondary–reserve) as required in 5.1.3.4.12.4 is maintained at all times.
(5) Where a cryogenic vessel is used as the reserve, the reserve vessel shall include a means to conserve the gas produced by evaporation of the cryogenic liquid in the reserve vessel and to discharge the gas into the line upstream of the final line regulator assembly as required by 5.1.3.4.12.6.

5.1.3.4.13.9 The bulk systems shall actuate a local signal and an indicator at all master alarms under the following conditions:

(1) When or at a predetermined set point before the main supply reaches an average day's supply, indicating low contents
(2) When or at a predetermined set point before the reserve supply begins to supply the system, indicating reserve is in use
(3) When or at a predetermined set point before the reserve supply contents fall to one day's average supply, indicating reserve low
(4) If the reserve is a cryogenic vessel, when or at a predetermined set point before the reserve internal pressure falls too low for the reserve to operate properly, indicating reserve failure
(5) Where there is more than one main supply vessel, when or at a predetermined set point before the secondary vessel begins to supply the system, indicating changeover

5.1.3.4.13.10 Where vaporizers are required to convert cryogenic liquid to the gaseous state, the vaporizer units shall conform to the following:

(1) Be permitted to operate by either ambient heat transfer or external thermal source (e.g. electric heater, hot water, steam)
(2) Be designed to provide adequate capacity for the customer's peak and average flowrates under local conditions, seasonal conditions for weather and humidity, and structures that obstruct air circulation flow and sunlight
(3) Have piping and manual/automatic valving configured in such a manner that operating vaporizer(s) or sections of the vaporizer can be switched to nonoperating vaporizer or section of the vaporizer to de-ice through a valving configuration that assures continuous flow to the facility through either or both vaporizers and/or sections of the vaporizer if valving switchover partially hangs up or fails

5.1.3.4.13.11 Where a vaporizer requires an external thermal source, the flow from the source of supply shall be unaffected by the loss of the external thermal source through either of the following:

(1) Reserve ambient heat transfer vaporizers of sufficient capacity for at least one day's average supply and piped so as to be unaffected by flow stoppage through the main vaporizer
(2) A reserve noncryogenic source capable of providing at least one day's average supply

5.1.3.4.14* Emergency Oxygen Supply Connection (EOSC). EOSCs shall be installed to permit connection of a temporary auxiliary source of supply for emergency or maintenance situations under the following conditions:

(1) Where the bulk cryogenic liquid central supply system is outside of and remote from the building that the oxygen supply serves
(2) Where there is not in the building a connected oxygen reserve sufficient for an average day's supply *(See 5.1.3.4.15 for requirements for such reserves.)*

Copyright National Fire Protection Association
Provided by IHS under license with NFPA
No reproduction or networking permitted without license from IHS
Not for Resale

(3) Where multiple freestanding buildings are served from a single oxygen source such that damage to the interconnecting oxygen line could result in one or more buildings losing oxygen supply. In this situation, each building shall be provided with a separate emergency connection.

5.1.3.4.14.1 EOSCs shall be located as follows:

(1) On the exterior of the building being served in a location accessible by emergency supply vehicles at all times in all weather conditions
(2) Connected to the main supply line immediately downstream of the main shutoff valve

5.1.3.4.14.2 EOSCs shall consist of the following:

(1) Physical protection to prevent unauthorized tampering
(2) A female DN (NPS) inlet for connection of the emergency oxygen source that is sized for 100 percent of the system demand at the emergency source gas pressure
(3) A manual shutoff valve to isolate the EOSC when not in use
(4) Two check valves, one downstream of the EOSC and one downstream of the main line shutoff valve, with both upstream from the tee connection for the two pipelines
(5) A relief valve sized to protect the downstream piping system and related equipment from exposure to pressures in excess of 50 percent higher than normal line pressure
(6) Any valves necessary to allow connection of an emergency supply of oxygen and isolation of the piping to the normal source of supply

5.1.3.4.15 In-Building Emergency Reserves.

5.1.3.4.15.1 In-building emergency reserves shall not be used as substitutes for the bulk gas reserves that are required in 5.1.3.4.13.4.

5.1.3.4.15.2 If a reserve is provided inside the building as a substitute for the EOSC, it shall be located in accordance with 5.1.3.3 as follows:

(1) In a room or enclosure constructed per 5.1.3.3.2
(2) In a room or enclosure ventilated per 5.1.3.3.3

5.1.3.4.15.3 In-building emergency reserves shall consist of either of the following:

(1) A gas cylinder header per 5.1.3.4.9 with sufficient cylinder connections to provide for at least an average day's supply
(2) A manifold for gas cylinders complying with 5.1.3.4.10

5.1.3.4.15.4 In-building emergency reserves shall include a check valve in the main line placed on the distribution system side of the ordinary source's main line valve to prevent flow of gas from the emergency reserve to the ordinary source.

5.1.3.4.15.5 In-building emergency reserves shall actuate a local signal and an alarm at all master alarms when or just before it begins to serve the system.

5.1.3.5* Level 1 Medical Air Supply Systems.

5.1.3.5.1* Quality of Medical Air. Medical air shall be required to have the following characteristics:

(1) Be supplied from cylinders, bulk containers, medical air compressor sources, or be reconstituted from oxygen USP and oil-free, dry Nitrogen NF
(2) Meet the requirements of medical air USP
(3) Have no detectable liquid hydrocarbons
(4) Have less than 25 ppm gaseous hydrocarbons
(5) Have equal to or less than 5 mg/m^3 of permanent particulates sized 1 micron or larger in the air at normal atmospheric pressure

5.1.3.5.2* Medical air sources shall be connected to the medical air distribution system only and shall be used only for air in the application of human respiration, and calibration of medical devices for respiratory application.

5.1.3.5.3* Medical Air Compressor Sources.

5.1.3.5.3.1 Medical air compressor systems shall be located per 5.1.3.3 as follows:

(1) Indoors in a dedicated mechanical equipment area, adequately ventilated and with any required utilities (e.g., electricity, drains, lighting, etc.)
(2) In a room constructed per 5.1.3.3.2
(3) In a room ventilated per 5.1.3.3.3.2
(4) For air-cooled equipment, in a room designed to maintain the ambient temperature range as recommended by the manufacturer

5.1.3.5.3.2 Medical air compressor systems shall consist of the following:

(1) Components complying with 5.1.3.5.4 through 5.1.3.5.10, arranged per 5.1.3.5.11
(2) An automatic means to prevent backflow from all on-cycle compressors through all off-cycle compressors
(3) A manual shutoff valve to isolate each compressor from the centrally piped system and from other compressors for maintenance or repair without loss of pressure in the system
(4) Intake filter–muffler(s) of the dry type
(5) Pressure relief valve(s) set at 50 percent above line pressure
(6) Piping and components between the compressor and the source shutoff valve, that do not contribute to contaminant levels
(7) Except as defined in 5.1.3.5.3.2(1) through 5.1.3.5.3.2(6), materials and devices used between the medical air intake and the medical air source valve shall be permitted to be of any design or construction appropriate for the service as determined by the manufacturer.

5.1.3.5.3.3 Medical air compressor systems shall preclude the condensation of water vapor in the piping distribution system by the selection of the air drying equipment.

5.1.3.5.4 Compressors for Medical Air.

5.1.3.5.4.1* Compressors for medical air shall be designed to prevent the introduction of contaminants or liquid into the pipeline by any of the following methods:

(1) Elimination of oil anywhere in the compressor (e.g., liquid ring and permanently sealed bearing compressors)
(2) Reciprocating compressors provided with a separation of the oil-containing section from the compression chamber by at least two seals creating an area open to atmosphere that allows the following:
    (a) Direct and unobstructed visual inspection of the interconnecting shaft through vent and inspection openings no smaller than 1.5 shaft diameters in size
    (b) The facility operators to confirm proper seal operation by direct visual inspection through the above-shaft opening, without disassembly of the compressor (e.g., extended head compressors with an atmospheric vent between the compression chamber and the crankcase)

--`,,```,,,-`-`,,`,,`,`,,`---
Copyright National Fire Protection Association
Provided by IHS under license with NFPA
No reproduction or networking permitted without license from IHS
Not for Resale

(3) Rotating element compressors provided with a compression chamber free of oil that provides the following:
   (a) Separation of each oil-containing section from the compression chamber by at least one seal having atmospheric vents on each side with the vent closest to the oil-containing section supplied with a gravity drain to atmosphere
   (b) Unobstructed visualization of the atmospheric vent(s), closest to each oil-containing section, that is accessible for inspection without disassembling the compressor
   (c) Entry of the rotating shaft into each compression chamber at a point that is above atmospheric pressure
   (d) The facility operators to confirm proper seal operation by direct visual inspection of the atmospheric vents

5.1.3.5.4.2 For liquid ring compressors, service water and seal water of a quality recommended by the compressor manufacturer shall be used.

5.1.3.5.4.3 Compressors shall be constructed of materials deemed suitable by the manufacturer.

5.1.3.5.4.4 Anti-vibration mountings shall be installed for compressors as required by equipment dynamics or location and in accordance with the manufacturer's recommendations.

5.1.3.5.4.5 Flexible connectors shall connect the air compressors with their intake and outlet piping.

5.1.3.5.5 Aftercoolers. Aftercoolers, where required, shall be provided with individual condensate traps. The receiver shall not be used as an aftercooler or aftercooler trap.

5.1.3.5.5.1 Aftercoolers shall be constructed of materials deemed suitable by the manufacturer.

5.1.3.5.5.2 Anti-vibration mountings shall be installed for aftercoolers as required by equipment dynamics or location and in accordance with the manufacturer's recommendations.

5.1.3.5.6 Medical Air Receivers. Receivers for medical air shall meet the following requirements:

(1) Be made of corrosion-resistant materials or otherwise be made corrosion-resistant
(2) Comply with Section VIII, Unfired Pressure Vessels, of the ASME *Boiler and Pressure Vessel Code*
(3) Be equipped with a pressure relief valve, automatic drain, manual drain, sight glass, and pressure indicator
(4) Be of a capacity sufficient to prevent the compressors from short-cycling

5.1.3.5.7 Medical Air Dryers. Medical air dryers shall meet the following requirements:

(1) Be designed to provide air at a maximum dew point that is below the frost point [0°C (32°F)] at any level of demand
(2) Be sized for 100 percent of the system peak calculated demand at design conditions
(3) Be constructed of materials deemed suitable by the manufacturer
(4) Be provided with anti-vibration mountings installed as required by equipment dynamics or location and in accordance with the manufacturer's recommendations

5.1.3.5.8 Medical Air Filters. Medical air filters shall meet the following requirements:

(1) Be appropriate for the intake air conditions
(2) Be located upstream (source side) of the final line regulators
(3) Be sized for 100 percent of the system peak calculated demand at design conditions and be rated for a minimum of 98 percent efficiency at 1 micron or greater
(4) Be equipped with a continuous visual indicator showing the status of the filter element life
(5) Be constructed of materials deemed suitable by the manufacturer

5.1.3.5.8.1 Compressors complying with 5.1.3.5.4.1(2) and 5.1.3.5.4.1(3) shall be provided with the following:

(1) Coalescing filters with element change indicators
(2) Charcoal absorbers with colorimetric hydrocarbon indicators

5.1.3.5.9 Medical Air Regulators. Medical air regulators shall meet the following requirements:

(1) Be sized for 100 percent of the system peak calculated demand at design condition
(2) Be constructed of materials deemed suitable by the manufacturer
(3) Be equipped with a pressure indicator indicating delivery pressure

5.1.3.5.10* Medical Air Local Alarm. A local alarm complying with 5.1.9.5 shall be provided for the medical air compressor source.

5.1.3.5.11 Piping Arrangement and Redundancies.

5.1.3.5.11.1 Component arrangement shall be as follows:

(1) Components shall be arranged to permit service and a continuous supply of medical air in the event of a single fault failure.
(2) Component arrangement shall be permitted to vary as required by the technology(ies) employed, provided an equal level of operating redundancy and medical air quality is maintained.

5.1.3.5.11.2 Medical air compressors shall be sufficient to serve the peak calculated demand with the largest single compressor out of service. In no case shall there be fewer than 2 (two) compressors.

5.1.3.5.11.3 When aftercoolers are provided, they shall be either one of the following:

(1) Arranged as a duplex or multiplex set, sized to serve the peak calculated demand with the largest single aftercooler out of service and provided with valves adequate to isolate any single aftercooler from the system without shutting down supply of medical air
(2) Arranged one per compressor, sized to handle the output of that compressor, and valved as appropriate to permit repair or replacement with that compressor out of service but without shutting down supply of medical air

5.1.3.5.11.4* Medical air receiver(s) shall be provided with proper valves to allow the flow of compressed air to enter and exit out of separate receiver ports during normal operation and allow the receiver to be bypassed during service without shutting down the supply of medical air.

5.1.3.5.11.5 Dryers, filters, and regulators shall be at least duplexed with each component sized to serve the peak calculated demand with the largest of each component out of service.

5.1.3.5.11.6* Dryers, filters, and regulators shall be provided with manual valves upstream and manual valves or check

--`,,```,,,,`-`-`,,`,,`,`,,`---
Copyright National Fire Protection Association
Provided by IHS under license with NFPA
No reproduction or networking permitted without license from IHS
Not for Resale

valves downstream to allow service to the components without shutting down the system in either one of the following ways:

(1) Be installed for each component, upstream and downstream of each component, allowing each to be individually isolated
(2) Be installed upstream (source side) and downstream of components in series so as to create redundant parallel branches of components

5.1.3.5.11.7 A three-way valve (three-port), indexed to flow, full port shall be permitted to be used to isolate one branch or component for the purposes of 5.1.3.5.11.3, 5.1.3.5.11.4, 5.1.3.5.11.5, and 5.1.3.5.11.6.

5.1.3.5.11.8 Under normal operation, only one aftercooler shall be open to airflow with the other aftercooler valved off.

5.1.3.5.11.9 Under normal operation, only one dryer–filter(s)–regulator sequence shall be open to airflow with the other sequence valved off.

5.1.3.5.11.10 If the relief valve required in 5.1.3.5.3.2(5) and 5.1.3.5.6(3) can be isolated from the system by the valve arrangement used to comply with 5.1.3.5.11.6, then redundant relief valve(s) shall be installed in the parallel sequence.

5.1.3.5.11.11 A DN8 (NPS ¼) valved sample port shall be provided downstream of the final line pressure regulators, dew point monitor, and carbon monoxide monitor and upstream of the source shutoff valve to allow for sampling of the medical air.

5.1.3.5.11.12 Medical air source systems shall be provided with a source valve per 5.1.4.4.

5.1.3.5.11.13 Where medical air piping systems at different operating pressures are required, the piping shall separate after the filters, but shall be provided with separate line regulators, dew point monitors, relief valves, and source shutoff valves.

5.1.3.5.12 Electrical Power and Control.

5.1.3.5.12.1 Additional compressor(s) shall automatically activate when the compressor(s) in operation is incapable of maintaining the required pressure.

5.1.3.5.12.2 Automatic or manual alternation of compressors shall allow division of operating time. If automatic alternation of compressors is not provided, the facility staff shall arrange a schedule for manual alternation.

5.1.3.5.12.3 Each compressor motor shall be provided with electrical components including, but not limited to, the following:

(1) A dedicated disconnect switch installed in the electrical circuit ahead of each motor starter
(2) Motor starting device
(3) Overload protection
(4) Where compressor systems having two or more compressors employ a control transformer or other voltage control power device, at least two such devices shall be installed
(5) Control circuits arranged in such a manner that the shutdown of one compressor does not interrupt the operation of another compressor
(6) Automatic restart function such that compressor(s) will restart after power interruption without manual intervention

5.1.3.5.12.4 Electrical installation and wiring shall conform to the requirements of NFPA 70, *National Electrical Code*.

5.1.3.5.12.5 Emergency electrical service for the compressors shall conform to the requirements of the essential electrical system as described in Chapter 4 of NFPA 99.

5.1.3.5.13 Compressor Intake.

5.1.3.5.13.1 The medical air compressors shall draw their air from a source of clean air located where no contamination is anticipated from engine exhausts, fuel storage vents, medical–surgical vacuum system discharges, particulate matter, or odor of any type.

5.1.3.5.13.2 The compressor air intake shall be located outdoors above roof level, at a minimum distance of 3.05 m (10 ft) from any door, window, exhaust, other intake, or opening in the building and a minimum distance of 6.1 m (20 ft) above the ground.

5.1.3.5.13.3 If an air source equal to or better than outside air (e.g., air already filtered for use in operating room ventilating systems) is available, it shall be permitted to be used for the medical air compressors with the following provisions:

(1) This alternate source of supply air shall be available on a continuous 24-hour-per-day, 7-day-per-week basis.
(2) Ventilating systems having fans with motors or drive belts located in the air stream shall not be used as a source of medical air intake.

5.1.3.5.13.4 Compressor intake piping shall be hard-drawn seamless copper, and one of the following:

(1) ASTM B 819, *Standard Specification for Seamless Copper Tube for Medical Gas Systems*, medical gas tube
(2) ASTM B 88, *Standard Specification for Seamless Copper Water Tube*, water tube (Type K or L)
(3) ASTM B 280, *Standard Specification for Seamless Copper Tubing for Air Conditioning and Refrigeration Field Service*, 280 ACR tube

5.1.3.5.13.5 Air intakes for separate compressors shall be permitted to be joined together to one common intake where the following conditions are met:

(1) The common intake is sized to minimize back pressure in accordance with the manufacturer's recommendations.
(2) Each compressor can be isolated by manual or check valve, blind flange, or tube cap to prevent open inlet piping when compressor(s) are removed for service and consequent backflow of room air into the other compressor(s).

5.1.3.5.13.6 The end of the intake shall be turned down and screened or otherwise be protected against the entry of vermin, debris, or precipitation by screening, fabricated or composed of a noncorroding material.

5.1.3.5.14 Operating Alarms and Local Signals. Medical air systems shall be monitored for conditions that may affect air quality during use or in the event of failure, based on the type of compressor(s) used in the system.

5.1.3.5.14.1 Where liquid ring air compressors, compressors having water-cooled heads, or water-cooled aftercoolers are used, air receivers shall be equipped with a high water level sensor that shuts down the compressor system and activates a local alarm indicator. *[See 5.1.9.5.4(7).]*

Copyright National Fire Protection Association
Provided by IHS under license with NFPA
No reproduction or networking permitted without license from IHS
Not for Resale

5.1.3.5.14.2 Where liquid ring compressors are used, each compressor shall have a liquid level sensor in each air–water separator, which, when the liquid level is above the design level, shuts down its compressor and activates a local alarm indicator. *[See 5.1.9.5.4(8).]*

5.1.3.5.14.3 Where nonliquid ring compressors compliant with 5.1.3.5.4.1(1) are used, the air temperature at the immediate outlet of each compressor cylinder shall be monitored by a high-temperature sensor that shuts down that compressor and activates a local alarm indicator. *[See 5.1.9.5.4(9).]* The temperature setting shall be as recommended by the compressor manufacturer.

5.1.3.5.14.4 Where compressors compliant with 5.1.3.5.4.1(2) and 5.1.3.5.4.1(3) are used, the following requirements shall apply:

(1) The air temperature at the immediate outlet of each compressor chamber shall be monitored by a high-temperature sensor that shuts down that compressor and activates a local alarm indicator. *[See 5.1.9.5.4(9).]* The temperature setting shall be as recommended by the compressor manufacturer.
(2) Coalescing filters with element change indicator shall be provided.
(3) Charcoal filters with colorimetric hydrocarbon indicator shall be provided.
(4) Liquid hydrocarbons shall be monitored on a continuous basis by pigment indicator or other type of instrument permanently installed downstream of each compressor and shall be inspected and documented daily.
(5) Gaseous hydrocarbons shall be monitored on a quarterly basis.

5.1.3.5.14.5 When the backup or lag compressor is running, a local alarm shall activate. *[See 5.1.9.5.4(1).]* This signal shall be manually reset.

5.1.3.5.15 Medical Air Quality Monitoring. Medical air quality shall be monitored downstream of the medical air regulators and upstream of the piping system as follows:

(1) Dew point shall be monitored and shall activate a local alarm and all master alarms when the dew point at system pressure exceeds +4°C (+39°F).
(2) Carbon monoxide shall be monitored and shall activate a local alarm when the CO level exceeds 10 ppm. *[See 5.1.9.5.4(2).]*
(3) Dew point and carbon monoxide monitors shall activate the individual monitor's signal at all master alarm panels if the monitor loses power.

5.1.3.6* Medical–Surgical Vacuum Supply Systems.

5.1.3.6.1 Medical–Surgical Vacuum Sources.

5.1.3.6.1.1 Medical–surgical vacuum sources shall be located per 5.1.3.3 as follows:

(1) Indoors in a dedicated mechanical equipment area, adequately ventilated and with any required utilities
(2) In a room constructed per 5.1.3.3.2
(3) In a room ventilated per 5.1.3.3.3.2
(4) For air-cooled equipment, in a room designed to maintain the ambient temperature range as recommended by the equipment manufacturer

5.1.3.6.1.2 Medical–surgical vacuum sources shall consist of the following:

(1) Two or more vacuum pumps sufficient to serve the peak calculated demand with the largest single vacuum pump out of service
(2) An automatic means to prevent backflow from any on-cycle vacuum pumps through any off-cycle vacuum pumps
(3) A shutoff valve or other isolation means to isolate each vacuum pump from the centrally piped system and other vacuum pumps for maintenance or repair without loss of vacuum in the system
(4) A vacuum receiver
(5) Piping between the vacuum pump(s), discharge(s), receiver(s), and the vacuum source shutoff valve shall be in accordance with 5.1.10.2 except that stainless, galvanized, or black steel pipe shall be permitted to be used.
(6) Except as defined in 5.1.3.6.1.2(1) through 5.1.3.6.1.2(5), materials and devices used between the medical vacuum exhaust and the medical vacuum source shall be permitted to be of any design or construction appropriate for the service as determined by the manufacturer.

5.1.3.6.2 Vacuum Pumps.

5.1.3.6.2.1 Vacuum pumps shall be constructed of materials deemed suitable by the manufacturer.

5.1.3.6.2.2 Anti-vibration mountings shall be installed for vacuum pumps as required by equipment dynamics or location and in accordance with the manufacturer's recommendations.

5.1.3.6.2.3 Flexible connectors shall connect the vacuum pumps with their intake and outlet piping.

5.1.3.6.2.4 For liquid ring vacuum pumps, seal water shall be of a quality recommended by the vacuum pump manufacturer.

5.1.3.6.3 Vacuum Receivers. Receivers for vacuum shall meet the following requirements:

(1) Be made of ferrous and/or nonferrous materials
(2) Comply with Section VIII, Unfired Pressure Vessels, of the ASME *Boiler and Pressure Vessel Code*
(3) Be capable of withstanding a gauge pressure of 415 kPa (60 psi) and 760 mm (29.9 in.) gauge HgV
(4) Be equipped with a manual drain
(5) Be of a capacity based on the technology of the pumps

5.1.3.6.4 Vacuum Local Alarm. A local alarm complying with 5.1.9.5 shall be provided for the vacuum source.

5.1.3.6.5 Piping Arrangement and Redundancies.

5.1.3.6.5.1 Piping arrangement shall be as follows:

(1) Piping shall be arranged to permit service and a continuous supply of medical–surgical vacuum in the event of a single fault failure.
(2) Piping arrangement shall be permitted to vary based on the technology(ies) employed, provided an equal level of operating redundancy is maintained.
(3) Where only one set of vacuum pumps is available for a combined medical–surgical vacuum system and an analysis, research, or teaching laboratory vacuum system, such laboratories shall be connected separate from the medical–surgical system directly to the receiver tank through its own isolation valve and fluid trap located at the receiver. Between the isolation valve and fluid trap, a scrubber shall be permitted to be installed.

5.1.3.6.5.2 The medical–surgical vacuum receiver(s) shall be serviceable without shutting down the medical–surgical vacuum system by any of the following methods:

Copyright National Fire Protection Association
Provided by IHS under license with NFPA
No reproduction or networking permitted without license from IHS
Not for Resale

(1) By providing an isolation valve where the receiver is tee'd into the main line
(2) By piping the receiver at the end of a valved isolation line
(3) By providing a three-valve bypass

5.1.3.6.5.3 Medical–surgical vacuum source systems shall be provided with a source shutoff valve per 5.1.4.4.

5.1.3.6.6 Electrical Power and Control.

5.1.3.6.6.1 Additional pumps shall automatically activate when the pump(s) in operation is incapable of adequately maintaining the required vacuum.

5.1.3.6.6.2 Automatic or manual alternation of pumps shall allow division of operating time. If automatic alternation of pumps is not provided, the facility staff shall arrange a schedule for manual alternation.

5.1.3.6.6.3 Each pump motor shall be provided with electrical components including, but not limited to, the following:

(1) A dedicated disconnect switch installed in the electrical circuit ahead of each motor starter
(2) Motor starting device
(3) Overload protection
(4) Where pump systems having two or more pumps employ a control transformer or other voltage control power device, at least two such devices are required
(5) Control circuits arranged in such a manner that the shutdown of one pump does not interrupt the operation of another pump
(6) Automatic restart function such that pump(s) will restart after power interruption without manual intervention

5.1.3.6.6.4 Electrical installation and wiring shall conform to the requirements of NFPA 70, *National Electrical Code*.

5.1.3.6.6.5 Emergency electrical service for the pumps shall conform to the requirements of the essential electrical system as described in Chapter 4 of NFPA 99.

5.1.3.6.7 Medical–Surgical Vacuum Source Exhaust.

5.1.3.6.7.1 The medical–surgical vacuum pumps shall exhaust in a manner and location that will minimize the hazards of noise and contamination to the facility and its environment.

5.1.3.6.7.2 The exhaust shall be located as follows:

(1) Outdoors
(2) At least 3.05 m (10 ft) from any door, window, air intake, or other openings in buildings
(3) At a level different from air intakes
(4) Where prevailing winds, adjacent buildings, topography, or other influences that would not divert the exhaust into occupied areas or prevent dispersion of the exhaust

5.1.3.6.7.3 The end of the exhaust shall be turned down and screened or otherwise be protected against the entry of vermin, debris, or precipitation by screening fabricated or composed of a noncorroding material.

5.1.3.6.7.4 The exhaust shall be piped of materials approved for medical–surgical vacuum piping under 5.1.10.2.

5.1.3.6.7.5 The exhaust shall be free of dips and loops that might trap condensate or oil. Where such low points are unavoidable, a drip leg and valved drain shall be installed.

5.1.3.6.7.6 Vacuum exhausts from multiple pumps shall be permitted to be joined together to one common exhaust where the following conditions are met:

(1) The common exhaust is sized to minimize back pressure in accordance with the pump manufacturer's recommendations.
(2) Each pump can be isolated by manual or check valve, blind flange, or tube cap to prevent open exhaust piping when pump(s) is removed for service and consequent flow of exhaust air into the room.

5.1.3.6.8 Operating Alarms. Medical–surgical vacuum systems shall activate a local alarm when the backup or lag pump is running per 5.1.9.5. This signal shall be manually reset.

5.1.3.7* Waste Anesthetic Gas Disposal (WAGD).

5.1.3.7.1* Sources. WAGD sources shall be chosen in consultation with the medical staff having knowledge of the requirements to determine the type of system, number and placement of terminals, and other required safety and operating devices.

5.1.3.7.1.1 WAGD shall be permitted to be produced by a dedicated producer, through the medical–surgical vacuum source or by venturi.

5.1.3.7.1.2 If WAGD is produced by the medical–surgical vacuum source, the following shall apply:

(1) The medical–surgical vacuum source shall comply with 5.1.3.6.
(2) Flammable anesthetics or other flammable vapors shall be diluted below the lower flammable limit prior to disposal into the medical–surgical vacuum system or the vacuum pumps shall comply with 5.1.3.7.2.1(2).
(3) The medical–surgical vacuum source shall be sized to accommodate the additional volume.

5.1.3.7.1.3 If WAGD is produced by a dedicated WAGD producer with a total power greater than 1 horsepower in total (both producers), the following shall apply:

(1) The WAGD source shall be located in accordance with 5.1.3.3.
(2) The WAGD source shall be indoors in a dedicated mechanical equipment area with any required utilities.
(3) The WAGD source shall be in a room constructed per 5.1.3.3.2.
(4) The WAGD source shall be ventilated per 5.1.3.3.3.2.
(5) For air-cooled equipment, the WAGD source shall be located to maintain the ambient temperature range as recommended by the manufacturer.
(6) The WAGD producers shall comply with 5.1.3.7.2.

5.1.3.7.1.4 If WAGD is produced by a dedicated WAGD producer with a total power less than 1 horsepower in total (both producers), the following shall be permitted to apply:

(1) The WAGD source shall be permitted to be located near the inlet(s) served.
(2) For air-cooled equipment, the WAGD source shall be located to maintain the ambient temperature range as recommended by the manufacturer.

5.1.3.7.1.5 For liquid ring pumps in WAGD service, seal water shall be of a quality as recommended by the pump manufacturer.

5.1.3.7.1.6 The WAGD source shall consist of the following:

(1) Two or more WAGD producers sufficient to serve the peak calculated demand with the largest single WAGD producer out of service
(2) An automatic means to prevent backflow from any on-cycle WAGD producers through any off-cycle WAGD producers

Copyright National Fire Protection Association
Provided by IHS under license with NFPA
No reproduction or networking permitted without license from IHS
Not for Resale

(3) A shutoff valve to isolate each WAGD producer from the centrally piped system and other WAGD producers for maintenance or repair without loss of medical–surgical vacuum in the system
(4) Piping between the WAGD producers and the source shutoff valve compliant with 5.1.10.2, except that stainless steel shall be permitted to be used as a piping material
(5) Anti-vibration mountings shall be installed for WAGD producers as required by equipment dynamics or location and in accordance with the manufacturer's recommendations
(6) Flexible connectors interconnecting the producers with their intake and outlet piping as required by equipment dynamics or location, in accordance with the WAGD producer manufacturer's recommendations

5.1.3.7.1.7 If WAGD is produced by a venturi, the following shall apply:

(1) The venturi shall not be user-adjustable (i.e., shall require the use of special tools).
(2) The venturi shall be driven using water, inert gas, instrument air, or other dedicated air source.
(3) Medical air shall not be used to power the venturi.

5.1.3.7.2 WAGD Producers.

5.1.3.7.2.1 Vacuum pumps used for WAGD service shall be as follows:

(1) Compliant with 5.1.3.6.2
(2) Designed of materials and using lubricants and sealants that are inert in the presence of oxygen, nitrous oxide, and halogenated anesthetics

5.1.3.7.2.2 Vacuum producers (e.g., fans or blowers) designed for operation at vacuums below 130 mm (5 in.) HgV shall be as follows:

(1) Permitted to be made of any materials determined by the manufacturer as suitable for the service
(2) Provided with anti-vibration mountings as required by equipment dynamics or location and in accordance with the manufacturer's recommendation
(3) Connected with their intake and outlet piping through flexible connections
(4) Used only for WAGD service and not employed for other services
(5) Interconnected via piping, ductwork, and so on made of materials determined by the manufacturer as suitable to the service

5.1.3.7.3 If WAGD is joined to vacuum piping, it shall be connected a minimum distance of 1.5 m (5 ft) from any vacuum inlet.

5.1.3.7.4 WAGD Alarms. When the WAGD system is served by a central source(s), a local alarm complying with 5.1.9.5 shall be provided for the WAGD source.

5.1.3.7.4.1 A WAGD source system shall activate a local alarm when the backup or lag producer is running.

5.1.3.7.5 Electrical Power and Control.

5.1.3.7.5.1 Additional producers shall automatically activate when the producer(s) in operation is incapable of maintaining the required vacuum.

5.1.3.7.5.2 Automatic or manual alternation of producers shall allow division of operating time. If automatic alternation of producers is not provided, the facility staff shall arrange a schedule for manual alternation.

5.1.3.7.5.3 Each producer motor shall be provided with electrical components including, but not limited to, the following:

(1) A dedicated disconnect switch installed in the electrical circuit ahead of each motor starter
(2) Motor starting device
(3) Overload protection
(4) Where WAGD systems having two or more producers employ a control transformer or other voltage control power device, at least two such devices
(5) Control circuits arranged in such a manner that the shutdown of one producer does not interrupt the operation of another producer
(6) Automatic restart function such that pump(s) will restart after power interruption without manual intervention

5.1.3.7.5.4 Electrical installation and wiring shall conform to the requirements of NFPA 70, *National Electrical Code*.

5.1.3.7.5.5 Emergency electrical service for the producers shall conform to the requirements of the essential electrical system as described in Chapter 4 of NFPA 99.

5.1.3.7.6 WAGD Exhaust. The WAGD pumps shall exhaust in compliance with 5.1.3.6.7.

5.1.3.8* Instrument Air Supply Systems.

5.1.3.8.1 The quality of instrument air shall be as follows:

(1) Compliant with Instrument Air section in ANSI/ISA S-7.0.01, *Quality Standard for Instrument Air*
(2) Filtered to 0.01 micron
(3) Free of liquids (e.g., water, hydrocarbons, solvents, etc.)
(4) Free of hydrocarbon vapors
(5) Dry to a dew point of –40°C (–40°F)

5.1.3.8.2 General.

5.1.3.8.2.1 Instrument air shall be permitted to be used for any medical support purpose (e.g., to operate tools, air driven booms, pendants, or similar applications) and (if appropriate to the procedures) to be used in laboratories.

5.1.3.8.2.2 Instrument air supply systems shall be located per 5.1.3.3 as follows:

(1) Indoors, in a dedicated mechanical equipment area, adequately ventilated and with any required utilities
(2) In a room constructed per 5.1.3.3.2
(3) In a room ventilated per 5.1.3.3.3.2
(4) For air-cooled equipment, in a room designed to maintain the ambient temperature range as recommended by the equipment manufacturer

5.1.3.8.2.3 Instrument air systems shall be prohibited from the following:

(1) Interconnection with medical air systems
(2) Usage for any purpose where the air will be intentionally respired by patients or staff

5.1.3.8.3 Instrument Air Source.

5.1.3.8.3.1 Instrument air sources shall produce air at not less than a gauge pressure of 1380 kPa (200 psi) output pressure.

5.1.3.8.3.2 Instrument air sources shall provide air meeting the definition of Instrument Air in Chapter 3.

Copyright National Fire Protection Association
Provided by IHS under license with NFPA
No reproduction or networking permitted without license from IHS
Not for Resale

5.1.3.8.3.3 Instrument air sources shall be permitted to include at least two compressors or one compressor and a standby header complying with 5.1.3.4.8.

5.1.3.8.3.4 Instrument air sources shall comply with 5.1.3.5.3 with exceptions as specified in 5.1.3.8.

5.1.3.8.4 Instrument Air Compressors. Instrument air compressors shall be permitted to be of any type capable of not less than a gauge pressure of 1380 kPa (200 psi) output pressure and of providing air meeting the definition of Instrument Air in Chapter 3.

5.1.3.8.5* Instrument Air Standby Headers.

5.1.3.8.5.1 Where instrument air systems are provided with a standby header, the header shall meet the following requirements:

(1) Comply with 5.1.3.4.9, except that the number of attached cylinders shall be sufficient for one hour normal operation
(2) Use connectors as for medical air in CGA V-1, *Standard for Compressed Gas Cylinder Valve Outlet and Inlet Connections* (ANSI B57.1)
(3) Enter the system upstream (source side) of the final line filters *(See Figure A.5.1.3.8.)*
(4) Automatically serve the system in the event of a failure of the compressor

5.1.3.8.6 Intake Air. Intake air for instrument air compressors shall be permitted to be drawn from the equipment location.

5.1.3.8.7 Instrument Air Filters.

5.1.3.8.7.1 Instrument air sources shall be filtered with activated carbon filters that meet the following requirements:

(1) Be located upstream (source side) of the final line filters
(2) Be sized for 100 percent of the system peak calculated demand at design conditions
(3) Be constructed of materials deemed suitable by the manufacturer

5.1.3.8.7.2 Final line filters shall meet the following requirements:

(1) Be located upstream (source side) of the final line regulators and downstream of the carbon filters
(2) Be sized for 100 percent of the system peak calculated demand at design conditions
(3) Be rated for a minimum of 98 percent efficiency at 0.01 micron
(4) Be equipped with a continuous visual indicator showing the status of the filter element life
(5) Be constructed of materials deemed suitable by the manufacturer

5.1.3.8.7.3 Filters combining the function of 5.1.3.8.7.1 and 5.1.3.8.7.2 shall be permitted to be used.

5.1.3.8.8 Instrument Air Accessories. Accessories used for instrument air sources shall comply with the following subparagraphs:

(1) 5.1.3.5.5 for aftercoolers
(2) 5.1.3.5.6 for air receivers
(3) 5.1.3.5.7 for air dryers
(4) 5.1.3.5.9 for air regulators

5.1.3.8.9 Instrument Air Piping Arrangement and Redundancies. Instrument air sources shall comply with 5.1.3.5.11 except for the following:

(1) Systems employing a standby header shall be permitted to have simplex aftercoolers and dryers.
(2) Systems employing a standby header shall not require a three-valve receiver bypass.
(3) Standby headers, where provided, shall be isolated from the compressor by a check valve to prevent backflow through the compressor.

5.1.3.8.10 Instrument Air Monitoring and Alarms.

5.1.3.8.10.1 Instrument air sources shall include the following alarms:

(1) A local alarm that activates when or just before the backup compressor (if provided) activates, indicating that the lag compressor is in operation. This signal shall be manually reset.
(2) A local alarm and alarms at all master alarm panels that activate when the dew point at system pressure exceeds –30°C (–22°F), indicating high dew point.

5.1.3.8.10.2 For sources with standby headers, the following additional conditions shall activate a local alarm at the compressor site, a local signal at the header location, and alarms at all master alarm panels:

(1) An alarm that activates when or just before the reserve begins to supply the system, indicating reserve in use
(2) An alarm that activates when or just before the reserve falls below an average hour's supply, indicating reserve low

5.1.3.8.11 Electrical Power and Control.

5.1.3.8.11.1 When multiple compressors are used, additional compressor(s) shall automatically activate when the compressor(s) in operation is incapable of maintaining the required pressure.

5.1.3.8.11.2 When multiple compressors are used, automatic or manual alternation of compressors shall allow division of operating time. If automatic alternation of compressors is not provided, the facility staff shall arrange a schedule for manual alternation.

5.1.3.8.11.3 Each compressor motor shall be provided with electrical components including, but not limited to, the following:

(1) A dedicated disconnect switch installed in the electrical circuit ahead of each motor starter
(2) Motor starting device
(3) Overload protection
(4) Where compressor systems having two or more compressors employ a control transformer or other voltage control power device, at least two such devices shall be installed
(5) Control circuits arranged in such a manner that the shutdown of one compressor does not interrupt the operation of another compressor
(6) Automatic restart function such that compressor(s) will restart after power interruption without manual intervention

5.1.3.8.11.4 Electrical installation and wiring shall conform to the requirements of NFPA 70, *National Electrical Code*.

5.1.3.8.11.5 Emergency electrical service for the compressors shall conform to the requirements of the essential electrical system as described in Chapter 4 of NFPA 99.

Copyright National Fire Protection Association
Provided by IHS under license with NFPA
No reproduction or networking permitted without license from IHS
Not for Resale

5.1.4* Valves.

5.1.4.1 Gas and Vacuum Shutoff Valves. Shutoff valves shall be provided to isolate sections or portions of the piped distribution system for maintenance, repair, or planned future expansion need, and to facilitate periodic testing.

5.1.4.2 Accessibility. All valves except valves in zone valve box assemblies shall be located in secured areas such as locked piped chases, or be locked or latched in their operating position, and be labeled as to gas supplied and the area(s) controlled.

5.1.4.2.1 Shutoff valves accessible to other than authorized personnel shall be installed in valve boxes with frangible or removable windows large enough to permit manual operation of valves.

5.1.4.2.2 Shutoff valves for use in certain areas, such as psychiatric or pediatric, shall be permitted to be secured with the approval of the authority having jurisdiction to prevent inappropriate access.

5.1.4.2.3 Valves for nonflammable medical gases shall not be installed in the same zone valve box assembly with flammable gases.

5.1.4.3 Valve Types. New or replacement shutoff valves shall be as follows:

(1) Quarter turn, full ported, ball type
(2) Brass or bronze construction
(3) Have extensions for brazing
(4) Have a handle indicating open or closed
(5) Consist of three-pieces permitting inline serviceability

5.1.4.3.1 Valves for positive pressure gases shall be cleaned for oxygen service by the manufacturer.

5.1.4.3.2 Valves for vacuum or WAGD service shall be permitted to be ball or butterfly type and shall not be required to be cleaned for oxygen service.

5.1.4.4 Source Valve. A shutoff valve shall be placed at the immediate connection of each source system to the piped distribution system to permit the entire source, including all accessory devices (e.g., air dryers, final line regulators, etc.), to be isolated from the facility.

5.1.4.4.1 The source valve shall be located in the immediate vicinity of the source equipment.

5.1.4.4.2 The source valve shall be labeled in accordance with 5.1.11.2.

5.1.4.5* Main Line Valve. A shutoff valve shall be provided in the main supply line inside of the building, except where one or more of the following conditions exist:

(1) The source and source valve are located inside the building served.
(2) The source system is physically mounted to the wall of the building served and the pipeline enters the building in the immediate vicinity of the source valve.

5.1.4.5.1 The main line valve shall be located to permit access by authorized personnel only (i.e., by locating above a ceiling or behind a locked access door).

5.1.4.5.2 The main line valve shall be located on the facility side of the source valve and outside of the source room, enclosure, or where the main line first enters the building.

5.1.4.5.3 The main line valve shall be labeled in accordance with 5.1.11.2.

5.1.4.6 Riser Valve. Each riser supplied from the main line shall be provided with a shutoff valve in the riser adjacent to the main line.

5.1.4.6.1 Riser valves shall be permitted to be located above ceilings, but shall remain accessible and not be obstructed.

5.1.4.6.2 The riser valve shall be labeled in accordance with 5.1.11.2.

5.1.4.7 Service Valves. Service valves shall be installed to allow servicing or modification of lateral branch piping from a main or riser without shutting down the entire main, riser, or facility.

5.1.4.7.1 Only one service valve shall be required for each branch off of a riser regardless of how many zone valve boxes are installed on that lateral.

5.1.4.7.2 Service valves shall be placed in the branch piping prior to any zone valve box assembly on that branch.

5.1.4.7.3 Service valves shall be located according to any one of the following:

(1) Behind a locked access door
(2) Locked open above a ceiling
(3) Locked open in a secure area

5.1.4.7.4 Service valves shall be labeled in accordance with 5.1.11.2.

5.1.4.7.5 Sensors for area alarm panels as required in 5.1.9.3.4 shall be permitted to be placed in any relationship to service valves (if installed).

5.1.4.8 Zone Valve. All station outlets/inlets shall be supplied through a zone valve as follows:

(1) The zone valve shall be placed such that a wall intervenes between the valve and outlets/inlets that it controls.
(2) The zone valve shall serve only outlets/inlets located on that same story.

5.1.4.8.1 Zone valves shall be readily operable from a standing position in the corridor on the same floor they serve.

5.1.4.8.2 Zone valves shall be so arranged that shutting off the supply of medical gas or vacuum to one zone will not affect the supply of medical gas or vacuum to another zone or the rest of the system.

5.1.4.8.3 A pressure/vacuum indicator shall be provided on the station outlet/inlet side of each zone valve.

5.1.4.8.4 Zone valve boxes shall be installed where they are visible and accessible at all times.

5.1.4.8.5 Zone valve boxes shall not be installed behind normally open or normally closed doors, or otherwise hidden from plain view.

5.1.4.8.6 Zone valve boxes shall not be located in closed or locked rooms, areas, or closets.

5.1.4.8.7 A zone valve shall be located immediately outside each vital life-support, critical care, and anesthetizing location in each medical gas and/or vacuum line, and located so as to be readily accessible in an emergency.

5.1.4.8.7.1 All gas-delivery columns, hose reels, ceiling tracks, control panels, pendants, booms, or other special installations shall be located downstream of the zone valve.

--`,,`,,,`-`-`,,`,,`,`,,`---
Copyright National Fire Protection Association
Provided by IHS under license with NFPA
No reproduction or networking permitted without license from IHS
Not for Resale

5.1.4.8.7.2 Zone valves shall be so arranged that shutting off the supply of gas to any one operating room or anesthetizing location will not affect the others.

5.1.4.8.8 Zone valves shall be labeled in accordance with 5.1.11.2.

5.1.4.9 In-Line Valves. Optional in-line valves shall be permitted to be installed to isolate or shut off piping for servicing of individual rooms or areas.

5.1.4.9.1 In-line shutoff valves intended for use to isolate piping for maintenance or modification shall meet the following requirements:

(1) Be located in a restricted area
(2) Be locked or latched open
(3) Be identified in accordance with 5.1.11.2

5.1.4.9.2 Sensors for area alarm panels as required in 5.1.9.3.4 shall be permitted to be placed in any relationship to in-line valves (if installed).

5.1.4.10 Valves for Future Connections. Shutoff valves provided for the connection of future piping shall meet the following requirements:

(1) Be located in a restricted area
(2) Be locked or latched closed
(3) Be identified in accordance with 5.1.11.2

5.1.4.10.1 Future connection valves shall be labeled as to gas content.

5.1.4.10.2 Downstream piping shall be closed with a brazed cap with tubing allowance for cutting and rebrazing.

5.1.5* Station Outlet/Inlets.

5.1.5.1 Each station outlet/inlet for medical gases or vacuum shall be gas-specific, whether the outlet/inlet is threaded, or is a noninterchangeable quick-coupler.

5.1.5.2 Each station outlet shall consist of a primary and a secondary valve (or assembly).

5.1.5.3 Each station inlet shall consist of a primary valve (or assembly) and shall be permitted to include a secondary valve (or assembly).

5.1.5.4 The secondary valve (or assembly) shall close automatically to stop the flow of gas (or vacuum, if provided) when the primary valve (or assembly) is removed.

5.1.5.5 Each outlet/inlet shall be legibly identified in accordance with 5.1.11.3.

5.1.5.6 Threaded outlets/inlets shall be non-interchangeable connections complying with CGA V-5, *Diameter-Index Safety System (Noninterchangeable Low Pressure Connections for Medical Gas Applications).*

5.1.5.7 Each station outlet/inlet, including those mounted in columns, hose reels, ceiling tracks, or other special installations, shall be designed so that parts or components that are required to be gas-specific for compliance with 5.1.5.1 and 5.1.5.9 cannot be interchanged between station outlet/inlet for different gases.

5.1.5.8 The use of common parts in outlets/inlets, such as springs, O-rings, fasteners, seals, and shutoff poppets, shall be permitted.

5.1.5.9 Components of a vacuum station inlet necessary for the maintenance of vacuum specificity shall be legibly marked to identify them as components or parts of a vacuum or suction system.

5.1.5.10 Components of inlets not specific to vacuum shall not be required to be marked.

5.1.5.11 Factory-installed copper inlet tubes on station outlets extending no further than 205 mm (8 in.) from the body of the terminal shall be not less than DN8 (NPS ¼) (⅜ in. O.D.) size, with 8 mm (0.3 in.) minimum inside diameter.

5.1.5.12 Factory-installed copper inlet tubes on station inlets extending no further than 205 mm (8 in.) from the body of the terminal shall be not less than DN10 (NPS ⅜) (½ in. O.D.) size, with 10 mm (0.4 in.) minimum inside diameter.

5.1.5.13 Station outlets/inlets shall be permitted to be recessed or otherwise protected from damage.

5.1.5.14 When multiple wall outlets/inlets are installed, they shall be spaced to permit the simultaneous use of adjacent outlets/inlets with any of the various types of therapy equipment.

5.1.5.15 Station outlets in systems having non-standard operating pressures shall meet the following additional requirements:

(1) Be gas-specific
(2) Be pressure-specific where a single gas is piped at more than one operating pressure [e.g., a station outlet for oxygen, 550 kPa (80 psi) shall not accept an adapter for oxygen, 345 kPa (50 psi)]
(3) If operated at a pressure in excess of 550 kPa (80 psi), be either D.I.S.S. connectors or comply with 5.1.5.15(4)
(4) If operated at a gauge pressure between 1380 kPa (200 psi) and 2070 kPa (300 psi), the station outlet shall be so designed as to prevent the removal of the adapter until the pressure has been relieved, to prevent the adapter injuring the user or others when removed from the outlet.

5.1.5.16 WAGD networks shall provide a WAGD inlet in all locations where nitrous oxide or halogenated anesthetic gas is intended to be administered.

5.1.5.16.1 Station inlets for WAGD service shall have the following additional characteristics:

(1) They shall not be interchangeable with any other systems, including medical–surgical vacuum.
(2) Components necessary for the maintenance of WAGD specificity shall be legibly marked to identify them as components of a WAGD inlet.
(3) They shall be of a type appropriate for the flow and vacuum level required by the facility's gas anesthetic machines.
(4) They shall be located to avoid physical damage to the inlet.

The text of 5.1.5.16 has been revised by a tentative interim amendment (TIA). See page 1.

5.1.6* Manufactured Assemblies.

5.1.6.1 Manufactured assemblies shall be pre-tested by the manufacturer prior to arrival at the installation site as follows:

(1) Initial blowdown test per 5.1.12.2.2
(2) Initial pressure test per 5.1.12.2.3
(3) Piping purge test per 5.1.12.2.5
(4) Standing pressure test per 5.1.12.2.6 or 5.1.12.2.7, except as permitted under 5.1.6.2

Copyright National Fire Protection Association
Provided by IHS under license with NFPA
No reproduction or networking permitted without license from IHS
Not for Resale

5.1.6.2 The standing pressure test under 5.1.6.1(4) shall be permitted to be performed by any testing method that will assure a pressure decay of less than 1 percent in 24 hours.

5.1.6.3 The manufacturer of the assembly shall provide documentation certifying the performance and successful completion of the tests required in 5.1.6.1.

5.1.6.4 Manufactured assemblies employing flexible hose shall use hose and flexible connectors with a minimum burst gauge pressure of 6895 kPa (1000 psi).

5.1.6.5 Manufactured assemblies shall have a flame spread rating of not greater than 200 when tested in accordance with NFPA 255, *Standard Method of Test of Surface Burning Characteristics of Building Materials*.

5.1.6.6 Manufactured assemblies employing flexible hose or tubing shall be attached to the pipelines using station outlets /inlets.

5.1.6.7 Manufactured assemblies employing hose or flexible connectors, where the station outlet/inlet attached to the piping is not fully and immediately accessible (i.e., cannot be manipulated without the removal of panels, doors, etc.), shall have station outlets/inlets with the following additional characteristics:

(1) Be D.I.S.S. connectors
(2) In pressure gases, be permitted to omit the secondary valve (or assembly) required in 5.1.5.2
(3) In vacuum and WAGD, be permitted to omit both primary and secondary valves (or assemblies) for minimum restriction to flow
(4) Be provided with a second terminal at which the user connects and disconnects complying with 5.1.5

5.1.6.8 Manufactured assemblies connected to the pipeline by brazing shall have station outlets/inlets that comply with 5.1.5 in all respects.

5.1.6.9 The installation of manufactured assemblies shall be tested in accordance with 5.1.12.

5.1.7* Surface-Mounted Medical Gas Rails (MGR).

5.1.7.1 MGR assemblies shall be permitted to be installed where multiple uses of medical gases and vacuum at a single patient location are required or anticipated.

5.1.7.2 MGR assemblies shall be entirely visible in the room, not passing into or through walls, partitions, and so forth.

5.1.7.3 MGR assemblies shall be made of materials with a melting point at least 538°C (1000°F).

5.1.7.4 MGR assemblies shall be cleaned per 5.1.10.1.1.

5.1.7.5 Station outlets or inlets shall not be placed on the ends of MGR assemblies.

5.1.7.6 Openings for station outlets/inlets in the MGR shall be gas-specific.

5.1.7.7 Openings in the MGR not occupied by station outlets/inlets (e.g., for future use) shall be capped or plugged so that a special tool is required for removal (i.e., cannot be removed by a wrench, pliers, screwdriver, or other common tools).

5.1.7.8 MGR assemblies shall connect to the pipeline through fittings that are brazed to the pipeline.

5.1.7.9* Where the pipeline and the MGR assembly are of dissimilar metals, the connections shall be plated or otherwise protected from interaction between the metals.

5.1.7.10 The installation of the MGR shall be tested in accordance with 5.1.12 and 5.1.13.

5.1.8 Pressure and Vacuum Indicators.

5.1.8.1 General.

5.1.8.1.1 Pressure indicators and manometers for medical gas piping systems shall be cleaned for oxygen service.

5.1.8.1.2 Gauges shall comply with ANSI/ASME B40.100, *Pressure Gauges and Gauge Attachments*.

5.1.8.1.3 The scale range of positive pressure analog indicators shall be such that the normal reading falls within the middle 50 percent of the scale.

5.1.8.1.4 The scale range of digital indicators shall be not more than two times the working pressure of the piping system.

5.1.8.1.5 The scale range of vacuum indicators shall be 0 mm to 760 mm (0 in. to 29.9 in.) gauge HgV, except that indicators with a normal range display shall indicate normal only above 300 mm (12 in.) gauge HgV.

5.1.8.1.6 Indicators adjacent to master alarm actuators and area alarms shall be labeled to identify the name of or chemical symbol for the particular piping system that they monitor.

5.1.8.1.7 The rated accuracy of indicators used for testing shall be 1 percent (full scale) or better at the point of reading.

5.1.8.2 Locations.

5.1.8.2.1 Pressure and vacuum indicators shall be readable from a standing position.

5.1.8.2.2 Pressure/vacuum indicators shall be provided at the following locations, as a minimum:

(1) Adjacent to the alarm-initiating device for source main line pressure and vacuum alarms in the master alarm system
(2) At or in area alarm panels to indicate the pressure/vacuum at the alarm activating device for each system that is monitored by the panel
(3) On the station outlet/inlet side of zone valves

5.1.8.2.3 All pressure-sensing devices and mainline pressure gauges downstream of the source valves shall be provided with a gas-specific demand check fitting to facilitate service testing or replacement.

5.1.8.2.3.1 Gas-specific demand check fittings shall not be required on zone valve pressure indicators.

5.1.8.2.4 Demand check fittings shall be provided for all monitors.

5.1.9* Level 1 Warning Systems.

5.1.9.1 General. All master, area, and local alarm systems used for medical gas and vacuum systems shall include the following:

(1) Separate visual indicators for each condition monitored, except as permitted in 5.1.9.5.2 for local alarms that are displayed on master alarm panels
(2) Visual indicators that remain in alarm until the situation that has caused the alarm is resolved
(3) A cancelable audible indication of each alarm condition that produces a sound with a minimum level of 80 dBA at .92 m (3 ft)
(4) A means to visually indicate a lamp or LED failure
(5) Visual and audible indication that the wiring to an alarm initiating device is disconnected

--`,,`,,,,-`-`,,`,,`,`,,`---
Copyright National Fire Protection Association
Provided by IHS under license with NFPA
No reproduction or networking permitted without license from IHS
Not for Resale

(6) Labeling of each indicator, indicating the condition monitored
(7) Labeling of each alarm panel for its area of surveillance
(8) Re-initiation of the audible signal if another alarm condition occurs while the audible alarm is silenced
(9) Power for master and area alarms from the life safety branch of the emergency electrical system as described in Chapter 4, Electrical Systems of NFPA 99
(10) Power for local alarms, dew point sensors, and carbon monoxide sensors permitted to be from the same essential electrical branch as is used to power the air compressor system
(11) Wiring from switches or sensors that is supervised or protected as required by Section 517.30(C)(3) of NFPA 70, *National Electrical Code*, for emergency system circuits
(12) Assurance by the responsible authority of the facility that the labeling of alarms, where room numbers or designations are used, is accurate and up-to-date
(13) Provisions for automatic restart after a power loss of 10 seconds (e.g., during generator startup) without giving false signals or requiring manual reset

5.1.9.2* Master Alarms. A master alarm system shall be provided to monitor the operation and condition of the source of supply, the reserve source (if any), and the pressure in the main lines of each medical gas and vacuum piping system.

5.1.9.2.1 The master alarm system shall consist of two or more alarm panels located in at least two separate locations, as follows:

(1) One master alarm panel shall be located in the office or work space of the on-site individual responsible for the maintenance of the medical gas and vacuum piping systems.
(2) In order to assure continuous surveillance of the medical gas and vacuum systems while the facility is in operation, the second master alarm panel shall be located in an area of continuous observation (e.g., the telephone switchboard, security office, or other continuously staffed location).

5.1.9.2.2 A centralized computer system shall be permitted to be substituted for one of the master alarms required in 5.1.9.2.1, if the computer system complies with 5.1.9.4.

5.1.9.2.3 The master alarm panels required in 5.1.9.2.1 shall connect directly to the alarm initiating devices that they monitor.

5.1.9.2.3.1 Master alarm signals shall not be relayed from one master alarm panel to another.

5.1.9.2.3.2 Where multi-pole alarm relays are used to isolate the alarm initiating signals to master alarm panels, the control power source for the relays shall be independent of any of the master alarm panels.

5.1.9.2.3.3 Multiple master alarms shall be permitted to monitor a single initiating device.

5.1.9.2.4 Master alarm panels for medical gas and vacuum systems shall each include the following signals:

(1) An alarm indication when, or just before, changeover occurs in a medical gas system that is supplied by a manifold or other alternating-type bulk system that has as a part of its normal operation a changeover from one portion of the operating supply to another
(2) An alarm indication for a bulk cryogenic liquid system when the main supply reaches an average day's supply, indicating low contents
(3) An alarm indication when, or just before, the changeover to the reserve supply occurs in a medical gas system that consists of one or more units that continuously supply the piping system while another unit remains as the reserve supply and operates only in the case of an emergency
(4) An alarm indication for cylinder reserve pressure low when the content of a cylinder reserve header is reduced below one average day's supply
(5) For bulk cryogenic liquid systems, an alarm when or at a predetermined set point before the reserve supply contents fall to one day's average supply, indicating reserve low
(6) Where a cryogenic liquid storage unit is used as a reserve for a bulk supply system, an alarm indication when the gas pressure available in the reserve unit is below that required for the medical gas system to function
(7) An alarm indication when the pressure in the main line of each separate medical gas system increases 20 percent or decreases 20 percent from the normal operating pressure
(8) An alarm indication when the medical–surgical vacuum pressure in the main line of each vacuum system drops to or below 300 mm (12 in.) gauge HgV
(9) An alarm indication(s) from the local alarm panel(s) as described in 5.1.9.5.2 to indicate when one or more of the conditions being monitored at a site is in alarm
(10) A medical air dew point high alarm from each compressor site to indicate when the line pressure dew point is greater than +2°C (+35°F)
(11) A WAGD low alarm when the WAGD vacuum level or flow is below effective operating limits
(12) An instrument air dew point high alarm from each compressor site to indicate when the line pressure dew point is greater than –30°C (–22°F)

5.1.9.2.5 The alarm indications required in 5.1.9.2.4(7) and 5.1.9.2.4(8) shall originate from sensors installed in the main lines immediately downstream (on the patient or use side) of the source valves. Where it is necessary to install a main line valve in addition to a source valve *(see 5.1.4.5)*, the sensors shall be located downstream (on the patient or use side) of the main valve.

5.1.9.3* Area Alarms. Area alarm panels shall be provided to monitor all medical gas, medical–surgical vacuum, and piped WAGD systems supplying anesthetizing locations, and other vital life support and critical areas (e.g., post anesthesia recovery, intensive care units, emergency departments, etc.).

5.1.9.3.1 Area alarms shall be located at a nurse's station or other similar location that will provide for surveillance.

5.1.9.3.2 Area alarm panels for medical gas systems shall indicate if the pressure in the lines in the area being monitored increases or decreases by 20 percent from the normal line pressure.

5.1.9.3.3 Area alarm panels for medical–surgical vacuum systems shall indicate if the vacuum in the area drops to or below 300 mm (12 in.) gauge HgV.

5.1.9.3.4 Sensors for area alarms shall be located as follows:

(1)*Vital life support and critical areas shall have the alarm sensors installed on the patient or use side of any of the individual zone valve box assemblies.
(2)*Areas for anesthetizing gas delivery shall have the sensors installed either on the source side of any of the individual room zone valve box assemblies or on the patient or use side of each of the individual zone valve assemblies.

--`,,```,,,,````-`-`,,`,,`,`,,`---

Copyright National Fire Protection Association
Provided by IHS under license with NFPA
No reproduction or networking permitted without license from IHS
Not for Resale

(3) The placement of the sensors shall not be affected by valves located in areas accessible to authorized personnel only, such as service valves *(see 5.1.4.7)* or in-line valves *(see 5.1.4.9)*.

5.1.9.4 Computer systems used as substitute master alarms as required by 5.1.9.2.1(2) shall have the mechanical and electrical characteristics described in 5.1.9.4.1 and the programming characteristics described in 5.1.9.4.2.

5.1.9.4.1 Computer systems used to substitute for alarms shall have the following mechanical and electrical characteristics:

(1) The computer system shall be in continuous uninterrupted operation and provided with power supplies as needed to ensure such reliability.
(2) The computer system shall be continuously attended by responsible individuals or shall provide remote signaling of responsible parties (e.g., through pagers, telephone autodialers, or other such means).
(3) Where computer systems rely on signal interface devices (e.g., electronic interfaces, other alarm panels, 4-20 mA cards, etc.), such interfaces shall be supervised such that failure of the device(s) shall initiate (an) alarm(s).
(4) If the computer system does not power the signaling switches/sensors from the same power supply required in 5.1.9.4.1(1), the power supply for the signaling switches/sensors shall be powered from the life safety branch of the emergency electrical system as described in Chapter 4, Electrical Systems, of NFPA 99.
(5) Computer systems shall be permitted to connect directly to the sensors/switches in 5.1.9.2.3 in the same manner as an alarm panel if operation of other alarm panel(s) is not impaired.
(6) Wiring from the computer system to the signaling switches or sensors shall comply with 5.1.9.1(11).
(7) Computer systems shall be provided with an audio alert per 5.1.9.1(3) except the audio alert shall be permitted to be only as loud as needed to alert the system operator.
(8) The facility shall assure compliance with 5.1.9.1(12)

5.1.9.4.2 The operating program(s) for computer systems used to substitute for alarms shall include the following:

(1) Medical gas alarms shall be allocated the priority of a life safety signal.
(2) A medical gas alarm signal shall interrupt any other activity of a lesser priority to run the alarm algorithm(s).
(3) The alarm algorithm shall include activation of an audible alert, activation of any remote signaling protocol, and display of the specific condition in alarm.
(4) The alarm algorithm shall provide for compliance with 5.1.9.1(1), 5.1.9.1(2), 5.1.9.1(3), 5.1.9.1(5), 5.1.9.1(6), and 5.1.9.1(8).

5.1.9.5* Local Alarms. Local alarms shall be installed to monitor the function of the air compressor system(s), medical–surgical vacuum pump system(s), WAGD systems, and instrument air systems.

5.1.9.5.1 The signals referenced in 5.1.9.5.4 shall be permitted to be located as follows:

(1) On or in the control panel(s) for the machinery being monitored
(2) Within a monitoring device (e.g., dew point monitor or carbon monoxide monitor)
(3) On a separate alarm panel(s)

5.1.9.5.2 The master alarm shall include at least one signal from the source equipment to indicate a problem with the source equipment at this location. This master alarm signal shall activate when any of the required local alarm signals for this source equipment activates.

5.1.9.5.3 If there is more than one medical air compressor system, instrument air compressor system, WAGD system, and/or more than one medical–surgical vacuum pump system at different locations in the facility, or if the compressors and/or vacuum sources are in different locations in the facility, then it shall be necessary for each location to have separate alarms at the master panels.

5.1.9.5.4 The following functions shall be monitored at each local alarm site:

(1) Backup or lag compressor in operation to indicate when the primary or lead air compressor is incapable of satisfying the demand of the requirements of the system, except when the medical air system consists of three or more compressors, then the backup or lag signal shall be permitted to energize when the last compressor has been signaled to start.
(2) High carbon monoxide level to indicate when the carbon monoxide level in the medical air system is 10 ppm or higher.
(3) Medical air dew point high to indicate when the line pressure dew point is greater than +4°C (+39°F).
(4) Backup or lag vacuum pump in operation to indicate when the primary or lead vacuum pump is incapable of satisfying the demand of the requirements of the system, except when the vacuum pump system consists of three or more pumps, then the backup or lag signal shall be permitted to energize when the last pump has been signaled to start.
(5) When a central dedicated WAGD producer is provided per 5.1.3.7.1.3, WAGD lag in use. The signal shall be manually reset.
(6) Instrument air dew point high to indicate when the line pressure dew point is greater than –30°C (–22°F).
(7) For compressor systems using liquid ring compressors or compressors with water-cooled components, high water in the receiver tank to indicate when the water level in the receiver tank has reached a level determined to be detrimental to the operation of the system.
(8) For compressor systems using liquid ring compressors, high water in the separators.
(9) For compressor systems using other than liquid ring compressors, high discharge air temperature.

5.1.10 Level 1 Distribution.

5.1.10.1 Piping Materials for Field-Installed Positive Pressure Medical Gas Systems.

5.1.10.1.1 Tubes, valves, fittings, station outlets, and other piping components in medical gas systems shall have been cleaned for oxygen service by the manufacturer prior to installation in accordance with CGA G-4.1, *Cleaning Equipment for Oxygen Service*, except that fittings shall be permitted to be cleaned by a supplier or agency other than the manufacturer.

5.1.10.1.2 Each length of tube shall be delivered plugged or capped by the manufacturer and kept sealed until prepared for installation.

5.1.10.1.3 Fittings, valves, and other components shall be delivered sealed, labeled, and kept sealed until prepared for installation.

Copyright National Fire Protection Association
Provided by IHS under license with NFPA
No reproduction or networking permitted without license from IHS
Not for Resale

5.1.10.1.4* Tubes shall be hard-drawn seamless copper ASTM B 819, *Standard Specification for Seamless Copper Tube for Medical Gas Systems*, medical gas tube, Type L, except that where operating pressures are above a gauge pressure of 1275 kPa (185 psi) Type K shall be used for sizes larger than DN80 (NPS 3) (3⅛ in. O.D.).

5.1.10.1.5 ASTM B 819, *Standard Specification for Seamless Copper Tube for Medical Gas Systems*, medical gas tube shall be identified by the manufacturer's markings "OXY," "MED," "OXY/MED," "OXY/ACR," or "ACR/MED" in blue (Type L) or green (Type K).

5.1.10.1.6 The installer shall furnish documentation certifying that all installed piping materials comply with the requirements of 5.1.10.1.1.

5.1.10.2 Piping Materials for Field-Installed Medical–Surgical Vacuum and WAGD Systems.

5.1.10.2.1 Piping for vacuum systems shall be constructed of any of the following:

(1) Hard-drawn seamless copper tube:
   (a) ASTM B 88, *Standard Specification for Seamless Copper Water Tube*, copper tube (Types K, L, M)
   (b) ASTM B 280, *Standard Specification for Seamless Copper Tubing for Air Conditioning and Refrigeration Field Service*, copper ACR tube
   (c) ASTM B 819, *Standard Specification for Seamless Copper Tube for Medical Gas Systems*, copper medical gas tubing (Type K or L)
(2) Stainless steel tube

5.1.10.2.2 Vacuum Tubing Marking.

5.1.10.2.2.1 If copper vacuum tubing is installed along with any medical gas tubing, the vacuum tubing shall, prior to installation, be prominently labeled or otherwise identified to preclude using materials or installation procedures in the medical gas system that are not suitable for oxygen service.

5.1.10.2.2.2 If medical gas tube (ASTM B 819, *Standard Specification for Seamless Copper Tube for Medical Gas Systems*) is used for vacuum piping, such special marking shall not be required, provided that the vacuum piping installation meets all other requirements for medical gas piping, including the prohibition of flux on copper-to-copper joints and the use of a nitrogen purge while brazing.

5.1.10.2.3 WAGD systems shall be piped as follows:

(1) Using materials compliant with 5.1.10.2.1 or 5.1.10.2.2
(2) In systems operated under 130 mm (5 in.) HgV maximum vacuum only, using any noncorroding tube or ductwork

5.1.10.3 Fittings.

5.1.10.3.1* Turns, offsets, and other changes in direction in welded or brazed medical gas and vacuum piping shall be made with wrought copper capillary fittings complying with ASME B16.22, *Wrought Copper and Copper Alloy Solder-Joint Pressure Fittings*, or brazed fittings complying with ASME B16.50, *Wrought Copper and Copper Alloy Braze-Joint Pressure Fittings*.

5.1.10.3.2 Cast copper alloy fittings shall not be permitted.

5.1.10.3.3 Branch connections in vacuum piping systems shall be permitted to be made using mechanically formed, drilled, and extruded tee-branch connections that are formed in accordance with the tool manufacturer's instructions, and brazed.

5.1.10.4 Threaded Joints. Threaded joints in medical gas and vacuum distribution piping shall meet the following requirements:

(1) Be limited to connections to pressure/vacuum indicators, alarm devices, check valves, and source equipment
(2) Be tapered pipe threads complying with ASME B1.20.1, *Pipe Threads, General Purpose, Inch*
(3) Be made up with polytetrafluoroethylene (such as Teflon™) tape or other thread sealant recommended for oxygen service, with the sealant applied to the male threads only

5.1.10.5 Brazed Joints.

5.1.10.5.1 General Requirements.

5.1.10.5.1.1 Brazed joints shall be made using a brazing alloy that exhibits a melting temperature in excess of 538°C (1000°F) to retain the integrity of the piping system in the event of fire exposure.

5.1.10.5.1.2 Brazed tube joints shall be the socket type.

5.1.10.5.1.3 Filler metals shall bond with and be metallurgically compatible with the base metals being joined.

5.1.10.5.1.4 Filler metals shall comply with ANSI/AWS A5.8, *Specification for Filler Metals for Brazing and Braze Welding*.

5.1.10.5.1.5 Copper-to-copper joints shall be brazed using a copper–phosphorus or copper–phosphorus–silver brazing filler metal (BCuP series) without flux.

5.1.10.5.1.6 Brazing performed between bulk cryogenic liquid vessels and their vaporizers (i.e., subject to cryogenic exposure) shall be permitted to be brazed using BAg brazing alloy with flux by a brazer qualified to CGA M-1, *Guide for Medical Gas Installations at Consumer Sites*.

5.1.10.5.1.7 Joints to be brazed in place shall be accessible for necessary preparation, assembly, heating, filler application, cooling, cleaning, and inspection.

5.1.10.5.1.8 Braze joints shall be continuously purged with Nitrogen NF.

5.1.10.5.2 Cutting Tube Ends.

5.1.10.5.2.1 Tube ends shall be cut square using a sharp tubing cutter to avoid deforming the tube.

5.1.10.5.2.2 The cutting wheels on tubing cutters shall be free from grease, oil, or other lubricant not suitable for oxygen service.

5.1.10.5.2.3 The cut ends of the tube shall be deburred with a sharp, clean deburring tool, taking care to prevent chips from entering the tube.

5.1.10.5.3 Cleaning Joints for Brazing.

5.1.10.5.3.1 The interior surfaces of tubes, fittings, and other components that are cleaned for oxygen service shall be stored and handled to avoid contamination prior to assembly and brazing.

5.1.10.5.3.2 The exterior surfaces of tube ends shall be cleaned prior to brazing to remove any surface oxides.

5.1.10.5.3.3 When cleaning the exterior surfaces of tube ends, no matter shall be permitted to enter the tube.

5.1.10.5.3.4 If the interior surfaces of fitting sockets become contaminated prior to brazing, they shall be recleaned for

Copyright National Fire Protection Association
Provided by IHS under license with NFPA
No reproduction or networking permitted without license from IHS
Not for Resale

oxygen in accordance with 5.1.10.5.3.10 and be cleaned for brazing with a clean, oil-free wire brush.

5.1.10.5.3.5 Clean, nonshedding, abrasive pads shall be used to clean the exterior surfaces of the tube ends.

5.1.10.5.3.6 The use of steel wool or sand cloth shall be prohibited.

5.1.10.5.3.7 The cleaning process shall not result in grooving of the surfaces to be joined.

5.1.10.5.3.8 After being abraded, the surfaces shall be wiped using a clean, lint-free white cloth.

5.1.10.5.3.9 Tubes, fittings, valves, and other components shall be visually examined internally before being joined to verify that they have not become contaminated for oxygen service and that they are free of obstructions or debris.

5.1.10.5.3.10 The interior surfaces of tube ends, fittings, and other components that were cleaned for oxygen service by the manufacturer, but became contaminated prior to being installed, shall be permitted to be recleaned on-site by the installer by thoroughly scrubbing the interior surfaces with a clean, hot water–alkaline solution, such as sodium carbonate or trisodium phosphate 450 g to 11 L (1 lb to 3 gal) of potable water and thoroughly rinsing them with clean, hot, potable water.

5.1.10.5.3.11 Other aqueous cleaning solutions shall be permitted to be used for on-site recleaning permitted in 5.1.10.5.3.10 provided that they are as recommended in CGA G-4.1, *Cleaning Equipment for Oxygen Service*, and are listed in CGA O2-DIR, *Directory of Cleaning Agents for Oxygen Service*.

5.1.10.5.3.12 Material that has become contaminated internally and is not clean for oxygen service shall not be installed.

5.1.10.5.3.13 Joints shall be brazed within eight hours after the surfaces are cleaned for brazing.

5.1.10.5.4 Brazing Dissimilar Metals.

5.1.10.5.4.1 Flux shall only be used when brazing dissimilar metals such as copper and bronze or brass, using a silver (BAg series) brazing filler metal.

5.1.10.5.4.2 Surfaces shall be cleaned for brazing in accordance with 5.1.10.5.3.

5.1.10.5.4.3 Flux shall be applied sparingly to minimize contamination of the inside of the tube with flux.

5.1.10.5.4.4 The flux shall be applied and worked over the cleaned surfaces to be brazed using a stiff bristle brush to ensure complete coverage and wetting of the surfaces with flux.

5.1.10.5.4.5 Where possible, short sections of copper tube shall be brazed onto the noncopper component and the interior of the subassembly shall be cleaned of flux prior to installation in the piping system.

5.1.10.5.4.6 On joints DN20 (NPS ¾) (⅞ in. O.D.) size and smaller, flux-coated brazing rods shall be permitted to be used in lieu of applying flux to the surfaces being joined.

5.1.10.5.5* Nitrogen Purge.

5.1.10.5.5.1 When brazing, joints shall be continuously purged with oil-free, dry Nitrogen NF to prevent the formation of copper oxide on the inside surfaces of the joint.

5.1.10.5.5.2 The source of the purge gas shall be monitored and the installer shall be audibly alerted when the source content is low.

5.1.10.5.5.3 The purge gas flow rate shall be controlled by the use of a pressure regulator and flow meter or combination thereof.

5.1.10.5.5.4 Pressure regulators alone shall not be used to control purge gas flow rates.

5.1.10.5.5.5 In order to assure that all ambient air has been removed from the pipeline prior to brazing, an oxygen analyzer shall be used to verify the effectiveness of the purge. The oxygen analyzer shall read below 1 percent oxygen concentration before brazing is to begin.

5.1.10.5.5.6 During and after installation, openings in the piping system shall be kept sealed to maintain a nitrogen atmosphere within the piping to prevent debris or other contaminants from entering the system.

5.1.10.5.5.7 While a joint is being brazed, a discharge opening shall be provided on the opposite side of the joint from where the purge gas is being introduced.

5.1.10.5.5.8 The flow of purge gas shall be maintained until the joint is cool to the touch.

5.1.10.5.5.9 After the joint has cooled, the purge discharge opening shall be sealed to prevent contamination of the inside of the tube and maintain the nitrogen atmosphere within the piping system.

5.1.10.5.5.10 The final connection of new piping to an existing, in-use pipeline shall be permitted to be made without the use of a nitrogen purge.

5.1.10.5.5.11 After a final connection in a positive pressure medical gas pipeline is made without a nitrogen purge, an outlet in the immediate downstream zone of the affected portion(s) of both the new and existing in-use piping shall be tested in accordance with 5.1.12.3.9, Final Tie-In Test.

5.1.10.5.5.12* When using the autogenous orbital welding process, joints shall be continuously purged inside and outside with inert gas(es) in accordance with the qualified welding procedure.

5.1.10.5.6 Assembly and Heating Joints.

5.1.10.5.6.1 Tube ends shall be inserted fully into the socket of the fitting.

5.1.10.5.6.2 Where flux is permitted, the joint shall be heated slowly until the flux has liquefied.

5.1.10.5.6.3 After flux is liquefied, or where flux is not permitted to be used, the joint shall be heated quickly to the brazing temperature, taking care not to overheat the joint.

5.1.10.5.6.4 Techniques for heating the joint, applying the brazing filler metal, and making horizontal, vertical, and large-diameter joints shall be as stated in sections on "Applying Heat and Brazing" and "Horizontal and Vertical Joints" in Chapter VII, "Brazed Joints," in the CDA *Copper Tube Handbook*.

5.1.10.5.7 Inspection of Brazed Joints.

5.1.10.5.7.1 After brazing, the outside of all joints shall be cleaned by washing with water and a wire brush to remove any residue and permit clear visual inspection of the joint.

Copyright National Fire Protection Association
Provided by IHS under license with NFPA
No reproduction or networking permitted without license from IHS
Not for Resale

5.1.10.5.7.2 Where flux has been used, the wash water shall be hot.

5.1.10.5.7.3 Each brazed joint shall be visually inspected after cleaning the outside surfaces.

5.1.10.5.7.4 Joints exhibiting the following conditions shall not be permitted:

(1) Flux or flux residue (when flux or flux-coated BAg series rods are used with dissimilar metals)
(2) Base metal melting or erosion
(3) Unmelted filler metal
(4) Failure of the filler metal to be clearly visible all the way around the joint at the interface between the socket and the tube
(5) Cracks in the tube or component
(6) Cracks in the braze filler metal
(7) Failure of the joint to hold the test pressure under the installer-performed initial pressure test (5.1.12.2.3) and standing pressure test (5.1.12.2.6 or 5.1.12.2.7)

5.1.10.5.7.5 Brazed joints that are identified as defective under conditions 5.1.10.5.7.4(2) or 5.1.10.5.7.4(5) shall be replaced.

5.1.10.5.7.6 Brazed joints that are identified as defective under conditions 5.1.10.5.7.4(1), 5.1.10.5.7.4(3), 5.1.10.5.7.4(4), 5.1.10.5.7.4(6), or 5.1.10.5.7.4(7) shall be permitted to be repaired, except that no joint shall be reheated more than once before being replaced.

5.1.10.6 Welded Joints.

5.1.10.6.1 Welded joints for medical gas and medical–surgical vacuum systems shall be permitted to be made using a gas tungsten arc welding (GTAW) autogenous orbital procedure.

5.1.10.6.2 The GTAW autogenous orbital procedure and the welder qualification procedure shall be qualified in accordance with ASME Section IX, Welding and Brazing Qualifications of the ASME *Boiler and Pressure Vessel Code*.

5.1.10.6.3 Welder qualification procedures shall include a "bend test" and a "tensile test" per ASME Section IX on each tube size diameter.

5.1.10.6.4 Each welder shall qualify to a welding procedure specification (WPS) for each tube diameter.

5.1.10.6.5* GTAW autogenous orbital welded joints shall be purged during welding with a commercially available mixture (± 5 percent) of 75 percent helium and 25 percent argon.

5.1.10.6.6 The shield gas shall be as required in 5.1.10.6.5.

5.1.10.6.7 Test coupons shall be welded and inspected, as a minimum, at start of work and every 4 hours thereafter, or when the machine is idle for more than 30 minutes, and at the end of the work period.

5.1.10.6.8 Test coupons shall be inspected on the I.D. and O.D. by a qualified quality control inspector.

5.1.10.6.9 Test coupons shall also be welded at change of operator, weld head, welding power supply or gas source.

5.1.10.6.10 All production welds shall be visually inspected on the O.D. by the operator and any obvious weld failures shall be cut out and re-welded.

5.1.10.7 Special Fittings. The following special fittings shall be permitted to be used in lieu of brazed joints:

(1) Memory-metal couplings having temperature and pressure ratings joints not less than that of a brazed joint
(2) Listed or approved metallic gas tube fittings that, when made up, provide a permanent joint having the mechanical, thermal, and sealing integrity of a brazed joint
(3) Dielectric fittings where required by the manufacturer of special medical equipment to electrically isolate the equipment from the piping distribution system
(4) Axially swaged, elastic strain preload fittings providing metal to metal seal having pressure and temperature ratings not less than that of a brazed joint and when complete are permanent and nonseparable

5.1.10.8 Prohibited Joints. The following joints shall be prohibited throughout medical gas and vacuum distribution pipeline systems:

(1) Flared and compression-type connections, including connections to station outlets and inlets, alarm devices, and other components
(2) Other straight-threaded connections, including unions
(3) The use of pipe-crimping tools to permanently stop the flow of medical gas and vacuum piping shall be prohibited.

5.1.10.9 Joints in WAGD networks.

5.1.10.9.1 WAGD networks designed for operation at vacuum in excess of 130 mm (5 in.) HgV shall be permitted to be joined by any method usable for medical vacuum under 5.1.10.5.

5.1.10.9.2 WAGD networks designed for operation at vacuum below 130 mm (5 in.) HgV shall be joined by any method usable for medical vacuum under 5.1.10.5 or by any method that will result in a leak-free network when tested per 5.1.12.3.2.

5.1.10.10 Installation of Piping and Equipment.

5.1.10.10.1 Pipe Sizing.

5.1.10.10.1.1 Piping systems shall be designed and sized to deliver the required flow rates at the utilization pressures.

5.1.10.10.1.2 Mains and branches in medical gas piping systems shall be not less than DN15 (NPS ½) (⅝ in. O.D.) size.

5.1.10.10.1.3 Mains and branches in medical–surgical vacuum systems shall be not less than DN20 (NPS ¾) (⅞ in. O.D.) size.

5.1.10.10.1.4 Drops to individual station outlets and inlets shall be not less than DN15 (NPS ½) (⅝ in. O.D.) size.

5.1.10.10.1.5 Runouts to alarm panels and connecting tubing for gauges and alarm devices shall be permitted to be DN8 (NPS ¼) (⅜ in. O.D.) size.

5.1.10.10.2 Protection of Piping. Piping shall be protected against freezing, corrosion, and physical damage.

5.1.10.10.2.1 Piping exposed in corridors and other areas where subject to physical damage from the movement of carts, stretchers, portable equipment, or vehicles shall be protected.

5.1.10.10.2.2 Piping underground within buildings or embedded in concrete floors or walls shall be installed in a continuous conduit.

5.1.10.10.3 Location of Piping.

5.1.10.10.3.1 Piping risers shall be permitted to be installed in pipe shafts if protected from physical damage, effects of excessive heat, corrosion, or contact with oil.

Copyright National Fire Protection Association
Provided by IHS under license with NFPA
No reproduction or networking permitted without license from IHS
Not for Resale

5.1.10.10.3.2 Piping shall not be installed in kitchens, elevator shafts, elevator machine rooms, areas with open flames, electrical service equipment over 600 volts, and areas prohibited under NFPA 70, *National Electrical Code*, except for the following locations:

(1) Room locations for medical air compressor supply systems and medical–surgical vacuum pump supply systems
(2) Room locations for secondary distribution circuit panels and breakers having a maximum voltage rating of 600 volts.

5.1.10.10.3.3 Medical gas piping shall be permitted to be installed in the same service trench or tunnel with fuel gas lines, fuel oil lines, electrical lines, steam lines, and similar utilities provided that the space is ventilated (naturally or mechanically) and the ambient temperature around the medical gas piping is limited to 54°C (130°F) maximum.

5.1.10.10.3.4 Medical gas piping shall not be located where subject to contact with oil, including a possible flooding area in the case of a major oil leak.

5.1.10.10.4 Pipe Support.

5.1.10.10.4.1 Piping shall be supported from the building structure in accordance with MSS SP-69, *Pipe Hangers and Supports — Selection and Application.*

5.1.10.10.4.2 Hangers and supports shall comply with MSS SP-58, *Pipe Hangers and Supports — Materials, Design, and Manufacture.*

5.1.10.10.4.3 Hangers for copper tube shall have a copper finish and be sized for copper tube.

5.1.10.10.4.4 In potentially damp locations, copper tube hangers or supports that are in contact with the tube shall be plastic-coated or otherwise be insulated from the tube.

5.1.10.10.4.5 Maximum support spacing shall be in accordance with Table 5.1.10.10.4.5.

Table 5.1.10.10.4.5 Maximum Pipe Support Spacing

Pipe Size	Hanger Spacing mm	Hanger Spacing ft
DN8 (NPS ¼) (⅜ in. O.D.)	1520	5
DN10 (NPS ⅜) (½ in. O.D.)	1830	6
DN15 (NPS ½) (⅝ in. O.D)	1830	6
DN20 (NPS ¾) (⅞ in. O.D.)	2130	7
DN25 (NPS 1) (1⅛ in. O.D.)	2440	8
DN32 (NPS 1¼) (1⅜ in. O.D.)	2740	9
DN40 (NPS 1½) (1⅝ in. O.D.) and larger	3050	10
Vertical risers, all sizes		
Every floor but not to exceed:	4570	15

5.1.10.10.4.6 Where required, medical gas and vacuum piping shall be seismically restrained against earthquakes in accordance with the applicable building code.

5.1.10.10.5 Underground Piping Outside of Buildings.

5.1.10.10.5.1 Buried piping outside of buildings shall be installed below the local level of frost penetration.

5.1.10.10.5.2 The installation procedure for underground piping shall protect the piping from physical damage while being backfilled.

5.1.10.10.5.3 If underground piping is protected by a conduit, cover, or other enclosure, the following requirements shall be met:

(1) Access shall be provided at the joints for visual inspection and leak testing.
(2) The conduit, cover, or enclosure shall be self-draining and not retain groundwater in prolonged contact with the pipe.

5.1.10.10.5.4 Buried piping that will be subject to surface loads shall be buried at a depth that will protect the piping or its enclosure from excessive stresses.

5.1.10.10.5.5 The minimum backfilled cover above the top of the pipe or its enclosure for buried piping outside of buildings shall be 900 mm (36 in.), except that the minimum cover shall be permitted to be reduced to 450 mm (18 in.) where physical damage is otherwise prevented.

5.1.10.10.5.6 Trenches shall be excavated so that the pipe or its enclosure has firm, substantially continuous bearing on the bottom of the trench.

5.1.10.10.5.7 Backfill shall be clean and compacted so as to protect and uniformly support the pipe or its enclosure.

5.1.10.10.5.8 A continuous tape or marker placed immediately above the pipe or its enclosure shall clearly identify the pipeline by specific name.

5.1.10.10.5.9 A continuous warning means shall also be provided above the pipeline at approximately one-half the depth of bury.

5.1.10.10.5.10 Where underground piping is installed through a wall sleeve, the ends of the sleeve shall be sealed to prevent the entrance of ground water into the building.

5.1.10.10.6 Branch Takeoffs. Runouts from horizontal piping shall be taken off above the centerline of the main or branch pipe and rise vertically or at an angle of not more than 45 degrees from vertical.

5.1.10.10.7 Hose and Flexible Connectors.

5.1.10.10.7.1 Hose and flexible connectors, both metallic and nonmetallic, shall be no longer than necessary and shall not penetrate or be concealed in walls, floors, ceilings, or partitions.

5.1.10.10.7.2 Flexible connectors, metallic or nonmetallic, shall have a minimum burst pressure, with a gauge pressure of 6895 kPa (1000 psi).

5.1.10.10.8 Prohibited System Interconnections.

5.1.10.10.8.1 Two or more medical gas or vacuum piping systems shall not be interconnected for installation, testing, or any other reason.

5.1.10.10.8.2 Leak testing shall be accomp
lished by separately charging and testing each individual piping system.

5.1.10.10.9 Manufacturer's Instructions.

5.1.10.10.9.1 The installation of individual components shall be made in accordance with the instructions of the manufacturer.

5.1.10.10.9.2 Such instructions shall include directions and information deemed by the manufacturer to be adequate for

Copyright National Fire Protection Association
Provided by IHS under license with NFPA
No reproduction or networking permitted without license from IHS
Not for Resale

attaining proper operation, testing, and maintenance of the medical gas and vacuum systems.

5.1.10.10.9.3 Copies of manufacturer's instructions shall be left with the system owner.

5.1.10.10.10 Changes in System Use.

5.1.10.10.10.1 Where a positive pressure medical gas piping distribution system originally used or constructed for the use at one pressure and for one gas is converted for operation at another pressure or for another gas, all provisions of 5.1.10 shall apply as if the system were new.

5.1.10.10.10.2 A vacuum system shall not be permitted to be converted for use as a gas system.

5.1.10.10.11 Qualification of Installers.

5.1.10.10.11.1 The installation of medical gas and vacuum systems shall be made by qualified, competent technicians who are experienced in making such installations.

5.1.10.10.11.2 Installers of medical gas and vacuum systems shall meet the requirements of ASSE 6010, *Professional Qualification Standard for Medical Gas Systems Installers.*

5.1.10.10.11.3 Brazing shall be performed by individuals who are qualified under the provisions of 5.1.10.10.12.

5.1.10.10.11.4 Prior to any installation work, the installer of medical gas and vacuum piping shall provide and maintain documentation on the job site for the qualification of brazing procedures and individual brazers that is required under 5.1.10.10.12.

5.1.10.10.11.5 Health care organization personnel shall be permitted to install piping systems if all of the requirements of 5.1.10.10.11 are met during the installation.

5.1.10.10.12 Qualification of Brazing Procedures and Brazing.

5.1.10.10.12.1 Brazing procedures and brazer performance for the installation of medical gas and vacuum piping shall be qualified in accordance with either Section IX, Welding and Brazing Qualifications, of the ASME *Boiler and Pressure Vessel Code*, or AWS B2.2, *Standard for Brazing Procedure and Performance Qualification*, both as modified by 5.1.10.10.12.2 through 5.1.10.10.12.5.

5.1.10.10.12.2 Brazers shall be qualified by visual examination of the test coupon followed by sectioning.

5.1.10.10.12.3 The brazing procedure specification shall address cleaning, joint clearance, overlap, internal purge gas, purge gas flow rate, and filler metal.

5.1.10.10.12.4 The brazing procedure qualification record and the record of brazer performance qualification shall document filler metal used, cleaning, joint clearance, overlap, internal purge gas and flow rate during brazing of coupon, and the absence of internal oxidation in the completed coupon.

5.1.10.10.12.5 Brazing procedures qualified by a technically competent group or agency shall be permitted under the following conditions:

(1) The brazing procedure specification and the procedure qualification record meets the requirements of this standard.
(2) The employer obtains a copy of both the brazing procedure specification and the supporting qualification records from the group or agency and signs and dates these records, thereby accepting responsibility for the qualifications that were performed by the group or agency.
(3) The employer qualifies at least one brazer following each brazing procedure specification used.

5.1.10.10.12.6 An employer shall be permitted to accept brazer qualification records of a previous employer under the following conditions:

(1) The brazer has been qualified following the same or an equivalent procedure that the new employer uses.
(2) The new employer obtains a copy of the record of brazer performance qualification tests from the previous employer and signs and dates these records, thereby accepting responsibility for the qualifications performed by the previous employer.

5.1.10.10.12.7 Performance qualifications of brazers shall remain in effect indefinitely unless the brazer does not braze with the qualified procedure for a period exceeding 6 months, or there is a specific reason to question the ability of the brazer.

5.1.11 Labeling and Identification. See Table 5.1.11.

5.1.11.1 Pipe Labeling.

5.1.11.1.1 Piping shall be labeled by stenciling or adhesive markers that identify the patient medical gas, the support gas, or vacuum system, and include:

(1) The name of the gas/vacuum system or the chemical symbol per Table 5.1.11
(2) The gas or vacuum system color code per Table 5.1.11
(3) Where positive pressure gas piping systems operate at pressures other than the standard gauge pressure in Table 5.1.11, the pipe labeling shall include the operating pressure in addition to the name of the gas

5.1.11.1.2 Pipe labels shall be located as follows:

(1) At intervals of not more than 6.1 m (20 ft)
(2) At least once in or above every room
(3) On both sides of walls or partitions penetrated by the piping
(4) At least once in every story height traversed by risers

5.1.11.1.3 Medical gas pipeline shall not be painted.

5.1.11.2 Shutoff Valves.

5.1.11.2.1 Shutoff valves shall be identified as follows:

(1) The name or chemical symbol for the specific medical gas or vacuum system
(2) The room or areas served
(3) A caution to not close or open the valve except in emergency

5.1.11.2.2 Where positive pressure gas piping systems operate at pressures other than the standard gauge pressure of 345 kPa to 380 kPa (50 psi to 55 psi) or a gauge pressure of 1100 kPa to 1275 kPa (160 psi to 185 psi) for nitrogen or instrument air, the valve identification shall also include the nonstandard operating pressure.

5.1.11.2.3 Source valves shall be labeled in substance as follows:

SOURCE VALVE

FOR THE (SOURCE NAME).

Copyright National Fire Protection Association
Provided by IHS under license with NFPA
No reproduction or networking permitted without license from IHS
Not for Resale

Table 5.1.11 Standard Designation Colors and Operating Pressures for Gas and Vacuum Systems

Gas Service	Abbreviated Name	Colors (Background/ Text)	Standard Gauge Pressure
Medical air	Med Air	Yellow/black	345–380 kPa (50–55 psi)
Carbon dioxide	CO_2	Gray/black or gray/white	345–380 kPa (50–55 psi)
Helium	He	Brown/white	345–380 kPa (50–55 psi)
Nitrogen	N_2	Black/white	1100–1275 kPa (160–185 psi)
Nitrous oxide	N_2O	Blue/white	345–380 kPa (50–55 psi)
Oxygen	O_2	Green/white or white/green	345–380 kPa (50–55 psi)
Oxygen/carbon dioxide mixtures	O_2/CO_2 *n*% (*n* is % of CO_2)	Green/white	345–380 kPa (50–55 psi)
Medical–surgical vacuum	Med Vac	White/black	380 mm to 760 mm (15 in. to 30 in.) HgV
Waste anesthetic gas disposal	WAGD	Violet/white	Varies with system type
Other mixtures	Gas A%/Gas B%	Colors as above Major gas for background/ minor gas for text	None
Nonmedical air (Level 3 gas-powered device)		Yellow and white diagonal stripe/black	None
Nonmedical and level 3 vacuum		White and black diagonal stripe/black boxed	None
Laboratory air		Yellow and white checkerboard/black	None
Laboratory vacuum		White and black checkerboard/black boxed	None
Instrument air		Red/white	1100–1275 kPa (160–185 psi)

5.1.11.2.4 Main line valves shall be labeled in substance as follows:

MAIN LINE VALVE FOR THE
(GAS/VACUUM NAME) SERVING THE
(NAME OF THE BUILDING).

5.1.11.2.5 Riser valve(s) shall be labeled in substance as follows:

RISER FOR THE (GAS/VACUUM NAME)
SERVING (NAME OF THE AREA/BUILDING
SERVED BY THE PARTICULAR RISER).

5.1.11.2.6 Service valve(s) shall be labeled in substance as follows:

SERVICE VALVE FOR THE
(GAS/VACUUM NAME) SERVING
(NAME OF THE AREA/BUILDING
SERVED BY THE PARTICULAR VALVE).

5.1.11.3 Station Outlets and Inlets.

5.1.11.3.1 Station outlets and inlets shall be identified as to the name or chemical symbol for the specific medical gas or vacuum provided.

5.1.11.3.2 Where medical gas systems operate at pressures other than the standard gauge pressure of 345 kPa to 380 kPa (50 psi to 55 psi) or a gauge pressure of 1100 kPa to 1275 kPa (160 psi to 185 psi) for nitrogen, the station outlet identification shall include the nonstandard operating pressure in addition to the name of the gas.

5.1.11.4 Alarm Panels. Labeling of alarm panels shall comply with the requirements of 5.1.9.1(6) and 5.1.9.1(7).

5.1.12* Performance Criteria and Testing—Level 1 (Gases, Medical–Surgical Vacuum, and WAGD).

5.1.12.1 General.

5.1.12.1.1 Inspection and testing shall be performed on all new piped gas systems, additions, renovations, temporary installations, or repaired systems, to assure the facility, by a docu-

Copyright National Fire Protection Association
Provided by IHS under license with NFPA
No reproduction or networking permitted without license from IHS
Not for Resale

mented procedure, that all applicable provisions of this document have been adhered to and system integrity has been achieved or maintained.

5.1.12.1.2 Inspection and testing shall include all components of the system or portions thereof, including, but not limited to, gas bulk source(s), manifolds, compressed air source systems (e.g., compressors, dryers, filters, regulators), source alarms and monitoring safeguards, master alarms, pipelines, isolation valves, area alarms, zone valves, and station inlets (vacuum) and outlets (pressure gases).

5.1.12.1.3 All systems that are breached and components that are subject to additions, renovations, or replacement (e.g., new gas sources: bulk, manifolds, compressors, dryers, alarms) shall be inspected and tested.

5.1.12.1.4 Systems shall be deemed breached at the point of pipeline intrusion by physical separation or by system component removal, replacement, or addition.

5.1.12.1.5 Breached portions of the systems subject to inspection and testing shall be confined to only the specific altered zone and components in the immediate zone or area that is located upstream for vacuum systems and downstream for pressure gases at the point or area of intrusion.

5.1.12.1.6 The inspection and testing reports shall be submitted directly to the party that contracted for the testing, who shall submit the report through channels to the responsible facility authority and any others that are required.

5.1.12.1.7 Reports shall contain detailed listings of all findings and results.

5.1.12.1.8 The responsible facility authority shall review these inspection and testing records prior to the use of all systems to assure that all findings and results of the inspection and testing have been successfully completed.

5.1.12.1.9 All documentation pertaining to inspections and testing shall be maintained on-site within the facility.

5.1.12.1.10 Before piping systems are initially put into use, the facility authority shall be responsible for ascertaining that the gas/vacuum delivered at the outlet/inlet is that shown on the outlet/inlet label and that the proper connecting fittings are installed for the specific gas/vacuum service.

5.1.12.1.11 Acceptance of the verifier's report shall be permitted to satisfy the requirements in 5.1.12.1.10.

5.1.12.1.12 The removal of components within a source system for repair and re-installation, or the replacement of components like for like shall be treated as new work for the purposes of testing whenever such work involves cutting and/or brazing new piping.

5.1.12.1.12.1 Where no piping is changed, functional testing shall be performed as follows:

(1) To verify the function of the replaced device
(2) To assure no other equipment in the system has been adversely impacted

5.1.12.1.12.2 Where no piping is changed, in addition to tests of general function required by 5.1.12.1.12.1, testing shall be performed as follows:

(1) Pressure gas sources shall be tested for compliance with 5.1.12.3.14.2 as applicable to the equipment type.
(2) Medical air and instrument air sources shall be tested to 5.1.12.3.14.3.
(3) Vacuum and WAGD systems shall be tested to 5.1.12.3.14.4.
(4) Alarm systems shall be tested to 5.1.12.3.5.2 and 5.1.12.3.5.3.
(5) All affected components shall be tested as appropriate to that specific component (e.g., a replaced dew point monitor would be tested to 5.1.3.5.15).

5.1.12.2 Installer Performed Tests.

5.1.12.2.1 General.

5.1.12.2.1.1 The tests required by 5.1.12.2 shall be performed and documented by the installer prior to the tests listed in 5.1.12.3, System Verification.

5.1.12.2.1.2 The test gas shall be oil-free, dry Nitrogen NF.

5.1.12.2.1.3 Where manufactured assemblies are to be installed, the tests required by 5.1.12.2 shall be performed as follows:

(1) After completion of the distribution piping but before the standing pressure test
(2) Prior to installation of manufactured assemblies supplied through flexible hose or flexible tubing
(3) At all station outlets/inlets on installed manufactured assemblies supplied through copper tubing

5.1.12.2.2 Initial Blow Down. Piping in medical gas and vacuum distribution systems shall be blown clear by means of oil-free, dry Nitrogen NF as follows:

(1) After installation of the distribution piping
(2) Before installation of station outlets/inlets and other system components (e.g., pressure/vacuum alarm devices, pressure/vacuum indicators, pressure relief valves, manifolds, source equipment)

5.1.12.2.3 Initial Pressure Test.

5.1.12.2.3.1 Each section of the piping in medical gas and vacuum systems shall be pressure tested.

5.1.12.2.3.2 Initial pressure tests shall be conducted as follows:

(1) After installation of station outlets/inlets rough-in assemblies. Test caps shall be permitted to be used.
(2) Prior to the installation of components of the distribution piping system that would be damaged by the test pressure (e.g., pressure/vacuum alarm devices, pressure/vacuum indicators, line pressure relief valves, manufactured assemblies with flexible hose, hose, etc.).

5.1.12.2.3.3 The source shutoff valve shall remain closed during these tests.

5.1.12.2.3.4 The test pressure for pressure gases shall be 1.5 times the system working pressure but not less than a gauge pressure of 1035 kPa (150 psi).

5.1.12.2.3.5 The test pressure for vacuum shall be not less than a gauge pressure of 415 kPa (60 psi).

5.1.12.2.3.6 The test pressure shall be maintained until each joint has been examined for leakage by means of soapy water or other equally effective means of leak detection that is safe for use with oxygen.

Copyright National Fire Protection Association
Provided by IHS under license with NFPA
No reproduction or networking permitted without license from IHS
Not for Resale

5.1.12.2.3.7 Leaks, if any, shall be located, repaired (if permitted), replaced (if required), and retested.

5.1.12.2.4 Cross-Connection Test. It shall be determined that no cross-connections exist between the various medical gas and vacuum piping systems.

5.1.12.2.4.1 All piping systems shall be reduced to atmospheric pressure.

5.1.12.2.4.2 Sources of test gas shall be disconnected from all piping systems except for the one system being tested.

5.1.12.2.4.3 The system under test shall be charged with oil-free, dry Nitrogen NF to a gauge pressure of 345 kPa (50 psi).

5.1.12.2.4.4 After the installation of the individual faceplates with appropriate adapters matching outlet/inlet labels, each individual outlet/inlet in each installed medical gas and vacuum piping system shall be checked to determine that the test gas is being dispensed only from the piping system being tested.

5.1.12.2.4.5 The cross-connection test referenced in 5.1.12.2.4 shall be repeated for each installed medical gas and vacuum piping system.

5.1.12.2.4.6 The proper labeling and identification of system outlets/inlets shall be confirmed during these tests.

5.1.12.2.5 Piping Purge Test. The outlets in each medical gas piping system shall be purged to remove any particulate matter from the distribution piping.

5.1.12.2.5.1 Using appropriate adapters, each outlet shall be purged with an intermittent high-volume flow of test gas until the purge produces no discoloration in a clean white cloth.

5.1.12.2.5.2 This purging shall be started at the closest outlet/inlet to the zone valve and continue to the furthest outlet/inlet within the zone.

5.1.12.2.6 Standing Pressure Test for Positive Pressure Medical Gas Piping. After successful completion of the initial pressure tests under 5.1.12.2.3, medical gas distribution piping shall be subject to a standing pressure test.

5.1.12.2.6.1 Tests shall be conducted after the final installation of station outlet valve bodies, face plates, and other distribution system components (e.g., pressure alarm devices, pressure indicators, line pressure relief valves, manufactured assemblies, hose, etc.).

5.1.12.2.6.2 The source valve shall be closed during this test.

5.1.12.2.6.3 The piping systems shall be subjected to a 24-hour standing pressure test using oil-free, dry Nitrogen NF.

5.1.12.2.6.4 Test pressures shall be 20 percent above the normal system operating line pressure.

5.1.12.2.6.5 At the conclusion of the tests, there shall be no change in the test pressure other than that attributed to changes of ambient temperature, as permitted under 5.1.12.2.7.6.

5.1.12.2.6.6 Leaks, if any, shall be located, repaired (if permitted) or replaced (if required), and retested.

5.1.12.2.7 Standing Vacuum Test for Vacuum System. After successful completion of the initial pressure tests under 5.1.12.2.3, vacuum distribution piping shall be subjected to a standing vacuum test.

5.1.12.2.7.1 Tests shall be conducted after installation of all components of the vacuum system.

5.1.12.2.7.2 The piping systems shall be subjected to a 24-hour standing vacuum test.

5.1.12.2.7.3 Test pressure shall be between 300 mm (12 in.) HgV and full vacuum.

5.1.12.2.7.4 During the test, the source of test vacuum shall be disconnected from the piping system.

5.1.12.2.7.5 At the conclusion of the test, there shall be no change in the vacuum other than that attributed to changes of ambient temperature, as permitted under 5.1.12.2.7.6.

5.1.12.2.7.6 Test vacuum changes due to expansion or contraction shall be permitted to be determined by means of the following pressure–temperature relationship:

(1) The calculated final absolute pressure equals the initial absolute pressure times the final absolute temperature, divided by the initial absolute temperature.
(2) Absolute pressure is the gauge pressure reading plus 101.4 kPa (14.7 psi).
(3) Absolute temperature is the temperature reading plus 238°C (460°F).
(4) The final allowable gauge pressure reading equals the final allowable absolute pressure minus a gauge pressure of 101.4 kPa (14.7 psi).

5.1.12.2.7.7 Leaks, if any, shall be located, repaired (if permitted) or replaced (if required), and retested.

5.1.12.3 System Verification.

5.1.12.3.1 General.

5.1.12.3.1.1 Verification tests shall be performed only after all tests required in 5.1.12.2, Installer Performed Tests, have been completed.

5.1.12.3.1.2 The test gas shall be oil-free, dry Nitrogen NF or the system gas where permitted.

5.1.12.3.1.3 Testing shall be conducted by a party technically competent and experienced in the field of medical gas and vacuum pipeline testing and meeting the requirements of ASSE 6030, *Professional Qualifications Standard for Medical Gas Systems Verifiers.*

5.1.12.3.1.4 Testing shall be performed by a party other than the installing contractor.

5.1.12.3.1.5 When systems have not been installed by in-house personnel, testing shall be permitted by personnel of that organization who meet the requirements of 5.1.12.3.1.3.

5.1.12.3.1.6 All tests required under 5.1.12.3 shall be performed after installation of any manufactured assemblies supplied through flexible hose or tubing.

5.1.12.3.1.7 Where there are multiple possible connection points for terminals, each possible position shall be tested independently.

5.1.12.3.1.8 The gas of system designation shall be permitted to be used for all tests, regardless of the size of the system. This includes:

(1) Standing pressure (5.1.12.3.2)
(2) Cross-connection (5.1.12.3.3)
(3) Alarms (5.1.12.3.5)
(4) Piping purge (5.1.12.3.6)
(5) Piping particulates (5.1.12.3.7)

Copyright National Fire Protection Association
Provided by IHS under license with NFPA
No reproduction or networking permitted without license from IHS
Not for Resale

5.1.12.3.2* Standing Pressure Test. Piping systems shall be subjected to a 10-minute standing pressure test at operating line pressure using the following procedure:

(1) After the system is filled with nitrogen or source gas, the source valve and all zone valves shall be closed.
(2) The piping system shall show no decrease in pressure after 10 minutes.
(3) Any leaks found shall be located, repaired, and retested per 5.1.12.2.6.

5.1.12.3.3 Cross-Connection Test. After closing of walls and completion of requirements of 5.1.12.2, Installer Performed Tests, it shall be determined that no cross-connection of piping systems exists by either of the methods detailed in 5.1.12.3.3.1 or 5.1.12.3.3.2.

5.1.12.3.3.1 Individual Pressurization.

(A) All medical gas and vacuum piping systems shall be reduced to atmospheric pressure.

(B) All sources of test gas from all of the medical gas and vacuum systems, with the exception of the one system to be checked, shall be disconnected.

(C) The system being checked shall be pressurized to a gauge pressure of 345 kPa (50 psi).

(D) With adapters matching outlet labels, each individual station outlet/inlet of all medical gas and vacuum systems installed shall be checked to determine that test gas is being dispensed only from the outlets/inlets of the piping system being tested.

(E) The source of test gas shall be disconnected and the system tested reduced to atmospheric pressure.

(F) Proceed to test each additional piping system until all medical gas and vacuum piping systems are free of cross-connections.

5.1.12.3.3.2 Pressure Differential.

(A) The pressure in all medical gas systems shall be reduced to atmospheric.

(B) The test gas pressure in all medical gas piping systems shall be increased to the values indicated in Table 5.1.12.3.3.2, simultaneously maintaining these nominal pressures throughout the test.

Table 5.1.12.3.3.2 Alternate Test Pressures

Medical Gas	Pressure (Gauge)
Gas mixtures	140 kPa (20 psi)
Nitrogen/instrument air	210 kPa (30 psi)
Nitrous oxide	275 kPa (40 psi)
Oxygen	345 kPa (50 psi)
Medical air	415 kPa (60 psi)
Systems at nonstandard pressures	70 kPa (10 psi) greater or less than any other system HgV Vacuum
Vacuum	510 mm (20 in.) HgV
WAGD	380 mm (15 in.) HgV (if so designed)

(C) Systems with nonstandard operating pressures shall be tested at a gauge pressure of at least 70 kPa (10 psi) higher or lower than any other system being tested.

(D) Any vacuum systems shall be in operation so that these vacuum systems are tested at the same time the medical gas systems are tested.

(E) Following the adjustment of pressures in accordance with 5.1.12.3.3.2(B) and 5.1.12.3.3.2(C), each station outlet for each medical gas system shall be tested using the gas-specific connection for each system with test gauge attached to verify that the correct test pressure/vacuum is present at each outlet/inlet of each system as listed in Table 5.1.12.3.3.2.

(F) Each test gauge used in performing this test shall be calibrated with the pressure indicator used for the line pressure regulator used to provide the source pressure.

(G) Each station outlet shall be identified by label (and color marking, if used), and the pressure indicated on the test gauge shall be that listed in Table 5.1.12.3.3.2 for the system being tested.

5.1.12.3.4 Valve Test. Valves installed in each medical gas and vacuum piping system shall be tested to verify proper operation and rooms or areas of control.

5.1.12.3.4.1 Records shall be made listing the rooms or areas controlled by each valve for each gas.

5.1.12.3.4.2 The information shall be utilized to assist and verify the proper labeling of the valves.

5.1.12.3.5 Alarm Test.

5.1.12.3.5.1 General.

(A) All warning systems for each medical gas and vacuum system(s) shall be tested to ensure that all components function properly prior to placing the system in service.

(B) Permanent records of these tests shall be maintained.

(C) Warning systems that are part of an addition to an existing piping system shall be tested prior to the connection of the new piping to the existing system.

(D) Tests of warning systems for new installations (initial tests) shall be performed after the cross-connection testing (5.1.12.3.3), but before purging the piping (5.1.12.3.6) and performing the remaining verification tests (5.1.12.3.7 through 5.1.12.3.14).

(E) Initial tests of warning systems that can be included in an addition or extension to an existing piping system shall be completed before connection of the addition to the existing system.

(F) Test gases for the initial tests shall be oil-free, dry Nitrogen NF, the gas of system designation, or operating vacuum.

(G) Where computer systems are used as substitutes for a required alarm panel as allowed under 5.1.9.2.2, the computer system shall be included in the alarm tests as modified in 5.1.9.4.

5.1.12.3.5.2 Master Alarms.

(A) The master alarm system tests shall be performed for each of the medical gas and vacuum piping systems.

(B) Permanent records of these tests shall be maintained with those required under 5.1.12.1.7.

Copyright National Fire Protection Association
Provided by IHS under license with NFPA
No reproduction or networking permitted without license from IHS
Not for Resale

(C) The audible and noncancelable visual signals of 5.1.9.1 shall indicate if the pressure in the main line increases or decreases 20 percent from the normal operating pressure.

(D) The operation of all master alarm signals referenced in 5.1.9.2.4 shall be verified.

5.1.12.3.5.3 Area Alarms. The warning signals for all medical gas piping systems supplying anesthetizing locations and other vital life-support and critical care areas, such as post-anesthesia recovery, intensive care units, coronary care units, emergency suites, and operating rooms shall be tested to verify an alarm condition if the pressure in the piping system increases or decreases 20 percent from the normal operating pressure for positive-pressure gases, or when the vacuum system(s) drop below a gauge pressure of 300 mm (12 in.) HgV.

5.1.12.3.6 Piping Purge Test. In order to remove any traces of particulate matter deposited in the pipelines as a result of construction, a heavy, intermittent purging of the pipeline shall be done.

5.1.12.3.6.1 The appropriate adapter shall be obtained from the facility or manufacturer, and high purge rates of at least 225 Nl/min (8 SCFM) shall be put on each outlet.

5.1.12.3.6.2 After the purge is started, it shall be rapidly interrupted several times until the purge produces no discoloration in a white cloth loosely held over the adapter during the purge.

5.1.12.3.6.3 In order to avoid possible damage to the outlet and its components, this test shall not be conducted using any implement other than the proper adapter.

5.1.12.3.7 Piping Particulate Test. For each positive-pressure gas system, the cleanliness of the piping system shall be verified.

5.1.12.3.7.1 A minimum of 1000 L (35 ft^3) of gas shall be filtered through a clean, white 0.45-micron filter at a minimum flow rate of 100 Nl/min (3.5 SCFM).

5.1.12.3.7.2 Twenty-five percent of the zones shall be tested at the outlet most remote from the source.

5.1.12.3.7.3 The filter shall accrue no more than 0.001 g (1 mg) of matter from any outlet tested.

5.1.12.3.7.4 If any outlet fails this test, the most remote outlet in every zone shall be tested.

5.1.12.3.7.5 The test shall be performed with the use of oil-free, dry Nitrogen NF.

5.1.12.3.8 Piping Purity Test. For each patient medical gas system, the purity of the piping system shall be verified.

5.1.12.3.8.1 These tests shall be performed with oil-free, dry Nitrogen NF or the gas of system designation.

5.1.12.3.8.2 The tests shall be for total nonmethane hydrocarbons (as methane), and halogenated hydrocarbons, and compared with the source gas.

5.1.12.3.8.3 This test shall be performed at the outlet most remote from the source.

5.1.12.3.8.4 The difference between the two tests shall in no case exceed the following:

(1) Total hydrocarbons (excluding methane), 5 ppm
(2) Halogenated hydrocarbons, 5 ppm

5.1.12.3.8.5 A test for dew point shall be conducted at the outlet most remote from the source and the dew point shall not exceed 500 ppm or −12°C (10°F) at 345 kPa (50 psig).

5.1.12.3.9 Final Tie-In Test.

5.1.12.3.9.1 Prior to the connection of any work or any extension or addition to an existing piping system, the tests in 5.1.12.3.1 through 5.1.12.3.8 shall be successfully performed on the new work.

5.1.12.3.9.2 Each joint in the final connection between the new work and the existing system shall be leak-tested with the gas of system designation at the normal operating pressure by means of soapy water or other means safe for use with oxygen. Vacuum joints shall be tested using an ultrasonic leak detector or other means that will permit detection of leaks in an active vacuum system.

5.1.12.3.9.3 For pressure gases, immediately after the final connection is made and leak-tested, the specific altered zone and components in the immediate zone or area that is downstream from the point or area of intrusion shall be purged per 5.1.12.3.6.

5.1.12.3.9.4 Before the new work is used for patient care, positive-pressure gases shall be tested for operational pressure, and gas concentration in accordance with 5.1.12.3.10 and 5.1.12.3.11.

5.1.12.3.9.5 Permanent records of these tests shall be maintained in accordance with 9.8.1 of NFPA 99.

5.1.12.3.10 Operational Pressure Test. Operational pressure tests shall be performed at each station outlet/inlet or terminal where the user makes connections and disconnections.

5.1.12.3.10.1 Tests shall be performed with the gas of system designation or the operating vacuum.

5.1.12.3.10.2 All gas outlets with a gauge pressure of 345 kPa (50 psi), including, but not limited to, oxygen, nitrous oxide, medical air, and carbon dioxide, shall deliver 100 SLPM (3.5 SCFM) with a pressure drop of not more than 35 kPa (5 psi) and static pressure of 345 kPa to 380 kPa (50 psi to 55 psi).

5.1.12.3.10.3 Support gas outlets shall deliver 140 SLPM (5.0 SCFM) with a pressure drop of not more than 35 kPa (5 psi) gauge and static pressure of 1100 kPa to 1275 kPa (160 psi to 185 psi) gauge.

5.1.12.3.10.4 Medical–surgical vacuum inlets shall draw 85 Nl/min (3 SCFM) without reducing the vacuum pressure below 300 mm (12 in.) gauge HgV at any adjacent station inlet.

5.1.12.3.10.5 Oxygen and medical air outlets serving critical care areas shall permit a transient flow rate of 170 SLPM (6 SCFM) for 3 seconds.

5.1.12.3.11 Medical Gas Concentration Test. After purging each system with the gas of system designation, the following shall be performed:

(1) Each pressure gas source and outlet shall be analyzed for concentration of gas, by volume.
(2) Analysis shall be conducted with instruments designed to measure the specific gas dispensed.
(3)*Allowable concentrations shall be as indicated in Table 5.1.12.3.11.

5.1.12.3.12 Medical Air Purity Test (Compressor System).

5.1.12.3.12.1 The medical air source shall be analyzed for concentration of contaminants by volume prior to the source valve being opened.

Copyright National Fire Protection Association
Provided by IHS under license with NFPA
No reproduction or networking permitted without license from IHS
Not for Resale

Table 5.1.12.3.11 Gas Concentrations

Medical Gas	Concentration
Oxygen	≥97% oxygen
Nitrous oxide	≥99% nitrous oxide
Nitrogen	≤1% oxygen or ≥99% nitrogen
Medical air	19.5–23.5% oxygen
Other gases	Concentration as specified by ±1% unless otherwise specified.

5.1.12.3.12.2 Sample(s) shall be taken for the air system test at the system sample port.

5.1.12.3.12.3 The test results shall not exceed the parameters in Table 5.1.12.3.12.3.

Table 5.1.12.3.12.3 Contaminant Parameters for Medical Air

Parameter	Limit Value
Pressure dew point	4°C (39°F)
Carbon monoxide	10 ppm
Carbon dioxide	500 ppm
Gaseous hydrocarbons	25 ppm (as methane)
Halogenated hydrocarbons	2 ppm

5.1.12.3.13 Labeling. The presence and correctness of labeling required by this standard for all components (e.g., station outlets/inlets, shutoff valves, and alarm panels) shall be verified.

5.1.12.3.14 Source Equipment Verification.

5.1.12.3.14.1 General. Source equipment verification shall be performed following the installation of the interconnecting pipelines, accessories, and source equipment.

5.1.12.3.14.2 Gas Supply Sources.

(A) The system apparatus shall be tested for proper function, including the changeover from primary to secondary supply (with its changeover signal) and the operation of the reserve (with its reserve-in-use signal), before the system is put into service.

(B) If the system has an actuating switch and signal to monitor the contents of the reserve, its function shall be tested before the system is put into service.

(C) If the system has an actuating switch and signal to monitor the pressure of the reserve unit, its function shall be tested before the system is put into service.

(D) Testing of the bulk supply signal and the master signal panel installations shall be arranged with the owner or the organization responsible for the operation and maintenance of the supply system for the testing of the bulk supply signals to ensure proper identification and activation of the master signal panels to be sure the facility can monitor the status of that supply system.

(E) The tests required in 5.1.12.3.14.2(D) shall also be conducted when the storage units are changed or replaced.

5.1.12.3.14.3 Medical Air Compressor Systems.

(A) Tests of the medical air compressor system shall include the purity test for air quality, and the test of the alarm sensors after calibration and setup per the manufacturer's instructions, as well as lead-lag controls.

(B) Tests shall be conducted at the sample port of the medical air system.

(C) The operation of the system control sensors, such as dew point, air temperature, and all other air quality monitoring sensors and controls, shall be checked for proper operation and function before the system is put into service.

(D) The quality of medical air as delivered by the compressor air supply shall be verified after installation of new components prior to use by patients.

(E) The air quality tests in 5.1.12.3.14.3(D) shall be performed after a minimum of 24 hours of operation in accordance with 5.1.12.3.14.3(F) of the machinery.

(F) A demand of approximately 25 percent of the rated compressor capacity shall be created to cause the compressors to cycle on and off continuously and the dryers to operate for the 24-hour period.

5.1.12.3.14.4 Medical–Surgical Vacuum Systems. The proper functioning of the medical–surgical vacuum source system(s) shall be tested before it is put into service.

5.1.13* Level 1 Operation and Management.

5.1.13.1 Special Precautions — Piped Patient Gas/Vacuum Systems.

5.1.13.1.1 Piping systems shall not be used for the distribution of flammable anesthetic gases.

5.1.13.1.2 Nonflammable medical gas systems used to supply gases for respiratory therapy shall be installed in accordance with 5.1.1 through 5.1.11 of this chapter.

5.1.13.1.3 Piping systems for gases shall not be used as a grounding electrode.

5.1.13.1.4* Liquid or debris shall not be introduced into the medical–surgical vacuum system for disposal.

5.1.13.1.5 The medical–surgical vacuum system shall not be used for vacuum steam condensate return or other nonmedical or nonsurgical applications.

5.1.13.2 Gas/Vacuum Systems Information and Warning Signs.

5.1.13.2.1 The gas content of medical gas and vacuum piping systems shall be labeled in accordance with 5.1.11.1.

5.1.13.2.2 Labels for shutoff valves shall be in accordance with 5.1.11.2, and updated when modifications are made changing the areas served.

5.1.14 Level 1 Support Gases.

5.1.14.1 Applicability. Support gases (nitrogen and instrument air) shall be gases that are not used for respiration, but are used for powering pneumatic devices (medical–surgical tools, equipment booms, pendants) related to patient care.

5.1.14.2 Nature of Hazards. Support gas systems are subject to the same hazards as are present in any piped medical gas system with the additional hazard of operating at higher pressures.

Copyright National Fire Protection Association
Provided by IHS under license with NFPA
No reproduction or networking permitted without license from IHS
Not for Resale

5.1.14.3 Sources. Requirements for support gas sources shall be in accordance with the following:

(1) Paragraphs 5.1.3.1 through 5.1.3.4 for nitrogen
(2) Paragraph 5.1.3.8 for instrument air

5.1.14.4 Valves. Requirements for support gas shall be in accordance with 5.1.4.1 through 5.1.4.10.

5.1.14.5 Outlets.

5.1.14.5.1 Requirements for nitrogen support gas outlets shall be in accordance with 5.1.5.1, 5.1.5.2, 5.1.5.4 through 5.1.5.8, 5.1.5.11, and 5.1.5.13 through 5.1.5.15.

5.1.14.5.2 Requirements for other support gas outlets shall be in accordance with 5.1.5.1, 5.1.5.2, 5.1.5.4, 5.1.5.5, 5.1.5.7, 5.1.5.8, 5.1.5.11 and 5.1.5.13 through 5.1.5.15.

5.1.14.6 Manufactured Assemblies. Requirements for support gases in manufactured assemblies shall be in accordance with 5.1.6.1 through 5.1.6.9.

5.1.14.7 Pressure Indicators. Requirements for support gas pressure indicators shall be in accordance with 5.1.8.1.1 through 5.1.8.1.4, 5.1.8.1.6, 5.1.8.1.7, and 5.1.8.2.

5.1.14.8 Warning Systems.

5.1.14.8.1 General requirements for support gas warning systems shall be in accordance with 5.1.9.1.

5.1.14.8.2 Master alarm requirements for support gas shall be in accordance with 5.1.9.2.

5.1.14.8.3 Area alarm requirements for support gas shall be in accordance with 5.1.9.3.

5.1.14.8.4 Local alarm requirements for support gas shall be in accordance with 5.1.9.4.

5.1.14.9 Distribution. Requirements for support gas piping shall be in accordance with 5.1.10.1, 5.1.10.3, 5.1.10.4, 5.1.10.5.1 through 5.1.10.5.6, 5.1.10.7, 5.1.10.7(1), 5.1.10.7(2), 5.1.10.7(3), and 5.1.10.10.

5.1.14.10 Labeling and Identification. Requirements for support gas labeling shall be in accordance with 5.1.11.1 through 5.1.11.4.

5.1.14.11 Performance Testing. Requirements for support gas performance testing shall be in accordance with 5.1.12 with the following exceptions:

(1) The piping purity test (5.1.12.3.8) shall be permitted to be omitted.
(2) The medical gas concentration test (5.1.12.3.11) shall be permitted to be omitted.

5.2 Level 2 Piped Gas and Vacuum Systems.

5.2.1* Applicability. These requirements shall apply to health care facilities that qualify for Level 2 systems as referenced in Chapters 13 through 21.

5.2.2 Nature of Hazards of Gas and Vacuum Systems. See Section B.2.

5.2.3 Level 2 Sources.

5.2.3.1 Central Supply System Identification and Labeling. Level 2 systems shall comply with 5.1.3.1.

5.2.3.2 Central Supply Operations. Level 2 systems shall comply with 5.1.3.2.

5.2.3.3 Central Supply System Locations. Level 2 systems shall comply with 5.1.3.3.

5.2.3.4 Central Supply Systems. Level 2 systems shall comply with 5.1.3.4.

5.2.3.5 Level 2 Medical Air Supply Systems. Level 2 systems shall comply with 5.1.3.5, except as follows:

(1) Medical air compressors, dryers, aftercoolers, filters, and regulators shall be permitted to be simplex.
(2) The facility staff shall develop their emergency plan to deal with the loss of medical air.

5.2.3.6 Level 2 Medical–Surgical Vacuum. Level 2 systems shall comply with 5.1.3.6, except as follows:

(1) Medical–surgical vacuum systems shall be permitted to be simplex.
(2) The facility staff shall develop their emergency plan to deal with the loss of medical–surgical vacuum.

5.2.3.7 Level 2 Waste Anesthetic Gas Disposal (WAGD). Level 2 systems shall comply with 5.1.3.7, except as follows:

(1) Medical WAGD pumps shall be permitted to be simplex.
(2) The facility staff shall develop their emergency plan to deal with the loss of WAGD.

5.2.3.8 Instrument Air Supply Systems. Level 2 systems shall comply with 5.1.3.8.

5.2.4 Valves. Level 2 systems shall comply with 5.1.4.

5.2.5 Station Outlets/Inlets. Level 2 systems shall comply with 5.1.5.

5.2.6 Manufactured Assemblies. Level 2 systems shall comply with 5.1.6.

5.2.7 Surface-Mounted Medical Gas Rails. Level 2 systems shall comply with 5.1.7.

5.2.8 Pressure and Vacuum Indicators. Level 2 systems shall comply with 5.1.8.

5.2.9 Warning Systems (Level 2). Warning systems associated with Level 2 systems shall provide the master, area, and local alarm functions of a Level 1 system as required in 5.1.8, except as follows:

(1) Warning systems shall be permitted to be a single alarm panel.
(2) The alarm panel shall be located in an area of continuous surveillance while the facility is in operation.
(3) Pressure and vacuum switches/sensors shall be mounted at the source equipment with a pressure indicator at the master alarm panel.

5.2.10 Level 2 Distribution. Level 2 systems shall comply with 5.1.10.

5.2.11 Labeling and Identification. Level 2 systems shall comply with 5.1.11.

5.2.12 Performance Criteria and Testing — Level 2 (Gas, Medical–Surgical Vacuum, and WAGD). Level 2 systems shall comply with 5.1.12.

5.2.13 Level 2 Operation and Management. Level 2 systems shall comply with 5.1.13.

5.3* Level 3 Piped Gas and Vacuum Systems.

5.3.1* Applicability.

5.3.1.1 These requirements shall apply to health care facilities that qualify to install Level 3 systems as referenced in Chapters 13 through 21.

--`,,```,,,,````-`-`,,`,,`,`,,`---

Copyright National Fire Protection Association
Provided by IHS under license with NFPA
No reproduction or networking permitted without license from IHS
Not for Resale

5.3.1.2 Wherever the term *medical gas* occurs in Level 3, the term shall apply to all piped systems of nitrous oxide and oxygen only.

5.3.1.3 Wherever the term *vacuum* occurs, the provisions shall apply to all piped systems for vacuum.

5.3.1.4 An existing Level 3 system that is not in strict compliance with the provisions of this standard shall be permitted to be continued in use as long as the authority having jurisdiction has determined that such use does not constitute a distinct hazard to life.

5.3.2 Nature of Hazards of Gas and Vacuum Systems. Potential fire and explosion hazards associated with medical gas systems and vacuum systems shall be considered in the design, installation, testing, operation, and maintenance of these systems. *(See Annex B.2.)*

5.3.3 Level 3 Sources.

5.3.3.1 Medical Gas Supply System Identification and Labeling.

5.3.3.1.1 Only cylinders and containers constructed, tested, and maintained in accordance with U.S. Department of Transportation specifications and regulations shall be permitted to be used.

5.3.3.1.2 Cylinder contents shall be identified by attached labels or stencils naming the contents in accordance with CGA C-7, *Guide to the Preparation of Precautionary Labeling and Marking of Compressed Gas Containers.*

5.3.3.1.3 Contents of cylinders and containers shall be verified prior to use.

5.3.3.1.4 Labels shall not be defaced, altered, or removed, and connecting fittings shall not be modified.

5.3.3.1.5 Locations containing medical gases other than oxygen shall have their door(s) labeled substantially as follows:

CAUTION

Medical Gases

NO Smoking or Open Flame

Room May Have Insufficient Oxygen

Open Door and Allow Room to Ventilate before Entering

5.3.3.2* Supply System Operations.

5.3.3.2.1 The use of adapters or conversion fittings to adapt one gas-specific fitting to another shall be prohibited.

5.3.3.2.2 Only medical gas cylinders, reusable shipping containers, and their accessories shall be permitted to be stored in rooms containing medical gas supply systems or medical gas cylinders.

5.3.3.2.3 No flammable materials, cylinders containing flammable gases, or containers containing flammable liquids shall be stored in rooms with medical gas cylinders.

5.3.3.2.4 Wooden racks for cylinder storage shall be permitted.

5.3.3.2.5 If cylinders are wrapped when received, the wrappers shall be removed prior to storage.

5.3.3.2.6 Cylinders not in use shall have their valve protection caps secured tightly in place.

5.3.3.2.7 Cylinders without correct markings or whose markings and gas-specific fittings do not match shall not be used.

5.3.3.2.8 Cryogenic liquid storage units intended to supply gas to the facility shall not be used to transfill other liquid storage vessels.

5.3.3.2.9 Care shall be exercised when handling cylinders that have been exposed to freezing temperatures or containers that contain cryogenic liquids to prevent injury to the skin.

5.3.3.2.10 Cylinders containing compressed gases and containers for volatile liquids shall be kept away from radiators, steam piping, and like sources of heat.

5.3.3.2.11 When cylinder valve protection caps are supplied, they shall be secured tightly in place unless the cylinder is connected for use.

5.3.3.2.12 Containers shall not be stored in a tightly closed space such as a closet.

5.3.3.3 Source Systems — Level 3.

5.3.3.3.1 Cylinders in service and in storage shall be individually secured and located to prevent falling or being knocked over.

5.3.3.3.2 Locations for Medical Gas Supply Systems.

5.3.3.3.2.1 Medical gas supply systems shall be permitted to be located indoors or outdoors.

5.3.3.3.2.2 Air compressors and vacuum pumps shall be located separately from medical gas (i.e., oxygen and nitrous oxide) cylinder storage enclosures.

5.3.3.3.2.3 Locations for supply systems shall not be used for storage purposes other than for containers of nonflammable gases except that storage of full or empty containers shall be permitted.

5.3.3.3.2.4 Other nonflammable medical gas supply systems or storage locations shall be permitted to be in the same location with oxygen or nitrous oxide, or both, provided adequate ventilation to prevent the development of oxygen-deficient atmospheres in the event of functioning of cylinder or manifold pressure-relief devices is provided.

5.3.3.3.2.5 Enclosures shall not be located in close proximity to open electrical conductors and transformers.

5.3.3.3.2.6 Enclosures shall not be located adjacent to storage tanks for flammable or combustible liquids.

5.3.3.3.3 Indoor Locations.

5.3.3.3.3.1 Enclosures for medical gases shall serve no other purpose.

5.3.3.3.3.2 Enclosures shall be constructed of an assembly of building materials with a fire resistance rating of at least 1 hour.

5.3.3.3.3.3 Enclosures shall not communicate directly with anesthetizing or storage locations for flammable anesthetizing agents.

5.3.3.3.3.4 Other nonflammable (inert) medical gases shall be permitted to be stored in the enclosure.

5.3.3.3.3.5 Flammable gases shall not be stored with oxidizing agents.

5.3.3.3.3.6 Storage of full and/or empty cylinders is permitted in the same enclosure.

Copyright National Fire Protection Association
Provided by IHS under license with NFPA
No reproduction or networking permitted without license from IHS
Not for Resale

5.3.3.3.4 Outdoor Locations.

5.3.3.3.4.1 Storage facilities that are adjacent to a building wall shall be located such that the distance to any window of the adjacent building is greater than 7.62 m (25 ft).

5.3.3.3.5 Doors and Gates. Enclosures for medical gas supply systems shall be provided with doors or gates.

5.3.3.3.5.1 If the enclosure is outside and/or remote from the single treatment facility, it shall be kept locked.

5.3.3.3.5.2 If the storage area is within the single treatment facility (i.e., is not remote), it shall be permitted to be locked.

5.3.3.3.6 Ventilation. Enclosures for medical gas systems (i.e., oxygen and nitrous oxide) shall be ventilated.

5.3.3.3.6.1 Where the total volume of Level 3 medical gases (i.e., oxygen and nitrous oxide) connected and in storage is greater than 84,950 L (3000 ft^3) at STP, indoor supply locations shall be provided with dedicated mechanical ventilation systems that draw air from within .3 m (1 ft) of the floor and operate continuously.

5.3.3.3.6.2 The power supply for mechanical ventilation fans shall conform to the requirements of an essential electrical system as described in Chapter 4 of NFPA 99.

5.3.3.3.6.3 Where the total volume of Level 3 medical gases (i.e., oxygen and nitrous oxide) connected and in storage is less than 84,950 L (3000 ft^3) at STP, natural ventilation shall be permitted to be employed.

5.3.3.3.6.4 Where natural ventilation is permitted, it shall consist of two louvered openings, each having a minimum free area of 46,500 mm^2 (72 $in.^2$), with one located within .3 m (1 ft) of the floor and one located within .3 m (1 ft) of the ceiling.

5.3.3.3.6.5 Louvered natural ventilation openings shall not be located in an exit access corridor.

5.3.3.3.6.6 Mechanical ventilation shall be provided if the requirements of 5.3.3.3.6.5 cannot be met.

5.3.3.3.6.7 Heating (where required) shall be by steam, hot water, or other indirect means.

5.3.3.3.6.8 Where enclosures (interior or exterior) for medical gas supply systems are located near sources of heat, such as furnaces, incinerators, or boiler rooms, they shall be of construction that protects cylinders from reaching temperatures 54°C (130°F).

5.3.3.3.7 Locations for Air Compressors and Vacuum Pumps.

5.3.3.3.7.1 Air compressors and vacuum pumps shall be installed in a designated mechanical equipment area, ventilated and with required utilities (e.g., electricity, drains, lighting, etc.).

5.3.3.4 Medical Gas Supply Systems — Level 3.

5.3.3.4.1 Mechanical means shall be provided to ensure the connection of cylinders containing the correct gas to the piping system.

5.3.3.4.1.1 Cylinder valve outlets for nonflammable gases and gas mixtures for medical purposes shall comply with CGA V-1, *Compressed Gas Association Standard for Compressed Gas Cylinder Valve Outlet and Inlet Connections* (ANSI B57.1; CSA B96).

5.3.3.4.1.2 Threaded connections between the regulators and the piping system shall comply with CGA V-5, *Diameter-Index Safety System (Noninterchangeable Low Pressure Connections for Medical Gas Applications).*

5.3.3.4.2 Level 3 medical gas supply systems shall include the components designated in 5.3.3.4.2.1 through 5.3.3.4.2.3.

5.3.3.4.2.1 A shutoff valve or check valve shall be installed downstream of each pressure regulator.

5.3.3.4.2.2 A pressure relief valve set at 50 percent above normal line pressure shall be installed downstream of the shutoff valve or check valve required in 5.3.3.4.2.1.

5.3.3.4.2.3 Pressure relief valves shall be of brass, bronze, or stainless steel and designed for oxygen service.

5.3.3.4.3 Flexible connectors of other than all-metal construction used to connect outlets of pressure regulators to fixed piping shall not exceed 1.52 m (5 ft) in length and shall not penetrate walls, floors, ceilings, or partitions.

5.3.3.4.3.1 Flexible connectors shall comply with the provisions of 5.3.3.4.1.2.

5.3.3.4.3.2 Flexible connectors shall have a pressure rating of at least a gauge pressure of 6895 kPa (1000 psi).

5.3.3.4.4* Supply systems supplying only a single treatment facility shall contain the following: a minimum of two banks of cylinders of oxygen and a minimum of two cylinders of nitrous oxide (if used), each containing the greater of either at least an average day's supply, or one of the following:

(1) When storage is not remote, two cylinders of oxygen and one cylinder of nitrous oxide (if used)
(2) When storage is remote, two cylinders of oxygen, minimum, and two cylinders of nitrous oxide, minimum (if used)

5.3.3.4.4.1 The cylinders for each gas service shall be manifolded so that the cylinders can alternately supply the piping system.

5.3.3.4.4.2* When the primary cylinder is unable to supply the system, the secondary cylinder shall be capable of being switched to supply the system.

5.3.3.4.4.3 When storage is not remote, either manual or automatic switchover shall be permitted to be used.

5.3.3.4.4.4* When the supply system is remote, automatic switchover shall be provided.

5.3.3.4.5 Supply systems supplying multiple treatment facilities shall contain the following: two banks of cylinders each containing at least the greater of an average day's supply or at least two cylinders of oxygen and two cylinders of nitrous oxide (if used).

5.3.3.4.5.1 The cylinders for each gas service shall be manifolded so that the cylinders can alternately supply the piping system.

5.3.3.4.5.2 When the primary bank cylinder(s) is unable to supply the system, the secondary cylinder(s) shall automatically operate to supply the piping system.

5.3.3.5* Level 3 Gas-Powered Devices Supply Systems.

5.3.3.5.1 Level 3 gas-powered devices supply systems shall be used where compressed air is required to drive dynamic devices used for patient treatment.

5.3.3.5.1.1 A gas-powered devices supply system shall be permitted to be used to supply power to gas-driven devices for

Copyright National Fire Protection Association
Provided by IHS under license with NFPA
No reproduction or networking permitted without license from IHS
Not for Resale

scavenging, but only where the exhaust of the scavenging device is a closed vent to the outside of the building.

5.3.3.5.2* Level 3 gas-powered devices supply systems shall be obtained from and be installed under the supervision of a manufacturer(s) or supplier(s) familiar with proper practices for its construction and use.

5.3.3.5.3 Level 3 gas-powered devices supply systems shall include the following:

(1) Disconnect switch(es)
(2) Motor-starting device(s)
(3) Motor overload protection device(s)
(4) One or more compressors
(5) For single, duplex, or multiple compressor systems, a means for activation/deactivation of each individual compressor
(6) When multiple compressors are used, manual or automatic means to alternate individual compressors
(7) When multiple compressors are used, manual or automatic means to activate the additional unit(s) should the in-service unit(s) be incapable of maintaining adequate pressure
(8) Intake filter–muffler(s) of the dry type
(9) Receiver(s) with drain plug or a manual drain or an automatic drain
(10) Shutoff valves
(11) Air dryer(s) that maintain 40 percent relative humidity at operating pressure and temperature
(12) In-line final particulate filters rated at 5 microns, 98 percent efficiency, with filter status indicator to ensure the delivery of compressed air with a maximum allowable 0.05 ppm liquid oil
(13) Pressure regulator(s)
(14) Pressure relief valve
(15) Pressure indicator
(16) Moisture indicator
(17) Oil indicator

5.3.3.5.3.1 A reserve for cylinders shall be permitted to be used to supplement or act as a reserve for the compressor source.

5.3.3.5.4 Receiver.

5.3.3.5.4.1 Receiver(s) shall have the capacity to prevent short cycling of the compressor(s).

5.3.3.5.4.2 Receiver(s) shall comply with Section VIII, Unfired Pressure Vessels, of the ASME *Boiler and Pressure Vessel Code.*

5.3.3.5.5* Moisture Indicator.

5.3.3.5.5.1 The moisture indicator shall be located in the active airstream prior to or after the receiver and upstream of any system pressure regulators.

5.3.3.5.5.2 The moisture indicator shall indicate (i.e., by color change, digital readout, or other method understood by the user) when the relative humidity of the compressed air exceeds 40 percent at line pressure and temperature.

5.3.3.5.6 Oil Indicator.

5.3.3.5.6.1 The oil indicator shall be located downstream of the receiver.

5.3.3.5.6.2 The oil indicator shall measure (i.e., by color change, digital readout, or other method understood by the user) an oil concentration of 0.05 ppm ± 0.03 ppm in air at a gauge pressure of 550 kPa to 690 kPa (80 psi to 100 psi).

5.3.3.5.7* Source of Intake Air.

5.3.3.5.7.1 Air sources for a compressor(s) located inside the building shall meet the following requirements:

(1) Be located within a room where no chemical-based material is stored or used and that is not an operatory
(2) Not be taken from a room or space in which there is an open or semi-open discharge from a Level 3 vacuum or scavenging system

5.3.3.5.7.2 Air sources for a compressor(s) located outside the building shall be drawn from locations where no contamination from vacuum or scavenging system discharges or particulate matter is anticipated.

5.3.3.5.8* Cylinder Gas Reserves/Supplements to Compressor Sources.

5.3.3.5.8.1 When used, cylinder reserves/supplements for compressor sources shall be a system of cylinders and necessary supply equipment that will permit supplying the required supply gas as an alternative to the compressor supplied air.

5.3.3.5.8.2 When the content of one primary cylinder is unable to supply the normal operating pressures, the secondary cylinder(s) shall be activated manually or automatically.

5.3.3.5.8.3 When used, cylinder gas reserves/supplements to compressor sources shall be piped into the system through a check valve and shutoff valve located in each supply line prior to the tee connection to the main line.

5.3.3.5.8.4 The designed operating pressure shall be below a gauge pressure of 1100 kPa (160 psi).

5.3.3.5.8.5 Reserves/supplements to compressor source systems shall either have regulator(s) mounted on the individual cylinder(s) or the cylinder(s) may be connected to a manifold via pigtail with pressure regulated at the manifold.

5.3.3.5.8.6* When nitrogen is used as the gas in a reserves/supplement to a compressor source, the following shall be permitted to apply:

(1) The volume of nitrogen connected and in storage shall not be considered in the limit of 84,950 L (3000 ft^3) of medical gases (i.e., oxygen and nitrous oxide) for classification as Level 3 and the ventilation of enclosures.
(2) Nitrogen gas cylinders shall be permitted to be stored in compressor rooms.
(3) The gas used shall be oil-free, dry Nitrogen NF.

5.3.3.6* Level 3 Vacuum Sources.

5.3.3.6.1 Level 3 vacuum sources shall be obtained from and be installed under the supervision of a manufacturer(s) or supplier(s) familiar with its installation and use.

5.3.3.6.2 Level 3 vacuum sources shall include the following:

(1) Pump or pumps suited for wet or dry service as intended in the design
(2) If intended for wet service, a liquid/air separator

5.3.3.6.3* Drains. None of the following provisions are intended to supersede provisions of local codes.

5.3.3.6.3.1 Liquids drained from a Level 3 vacuum source shall be directly connected to a sanitary drainage system through a trapped and vented drain.

Copyright National Fire Protection Association
Provided by IHS under license with NFPA
No reproduction or networking permitted without license from IHS
Not for Resale

5.3.3.6.3.2 Where the drainage is from a waste holding tank on the suction side of the vacuum source, the following requirements shall be met:

(1) A check valve shall be installed in the drain line from the holding tank.
(2) The trap in the building drainage system shall be the deep-seal type that is conventionally vented within the plumbing system.
(3) An additional vent shall be installed between the holding tank drain check valve and the drain trap, on the inlet side of the trap, to close and seal the check valve while the holding tank is operating under vacuum and collecting waste.
(4) The additional vent described in 5.3.3.6.3.2(3) shall be permitted to be connected to the plumbing system vents.
(5) Both of the vents in 5.3.3.6.3.2(3) and 5.3.3.6.3.2(4) shall extend vertically to not less than 152 mm (6 in.) above the top of the holding tank before turning horizontal.
(6) The trap and drain branch shall be not less than two pipe sizes larger than the waste pipe from the separator, but not less than DN50 (NPS 2).
(7) The trap seal shall be not less than 100 mm (4 in.) deep.
(8) The vent for the vacuum check valve shall be not less than the size of the check valve.
(9) The vent for the trap shall be not less than one-half the size of the trap and drain branch.

5.3.3.6.3.3 Where the drainage is at a positive pressure from an air/waste separator on the discharge side of the vacuum source, the following requirements shall be met:

(1) The trap in the building drainage system shall be the deep-seal type that is conventionally vented within the plumbing system.
(2) The trap vent shall extend vertically to not less than 152 mm (6 in.) above the top of the separator before turning horizontal.
(3) The trap and drain branch shall be not less than two pipe sizes larger than the waste pipe from the separator, but not less than DN40 (NPS 1½).
(4) The vent shall be the full size of the trap and drain.
(5) The trap seal shall be at least two times the exhaust back pressure in the separator, but not less than 100 mm (4 in.) deep.

5.3.3.6.4 Exhausts.

5.3.3.6.4.1 The gas discharge from a Level 3 vacuum source shall be piped to the outside.

5.3.3.6.4.2 The discharge point shall be chosen to minimize the hazards of noise.

5.3.3.6.4.3 The discharge point shall be located remote from any door, window, or other opening in the building.

5.3.3.6.4.4 The discharge point shall be located at a different level than air intakes.

5.3.3.6.4.5 The discharge point shall not be located where affected by prevailing winds, adjacent buildings, topography, or other obstacles to the rapid dispersion of the exhaust gases.

5.3.3.6.4.6 The discharge point shall be protected against the entry of insects, vermin, debris, and precipitation.

5.3.3.6.4.7 The discharge piping shall be sized to prevent back pressure greater than the pump manufacturer's recommendations.

5.3.3.6.4.8* Where multiple pumps discharge through a common pipe, each pump shall be fitted with a check valve, a manual isolation valve, or shall be arranged to permit capping the individual pump exhausts when a pump is removed for service.

5.3.3.6.4.9 Where multiple pumps discharge through a common pipe, piping shall be arranged following the pump manufacturer's recommendations.

5.3.4* Level 3 Valves.

5.3.4.1 Emergency Shutoff Valves.

5.3.4.1.1 Where the central supply is remote from the medical gas system use points, the main supply line shall be provided with a shutoff valve so located in the single treatment facility as to be accessible from use-point locations in an emergency.

5.3.4.1.2 Where the supply is remote from a single treatment facility, the main supply line shall be provided with a shutoff valve so located in the single treatment facility as to be accessible from use-point locations in an emergency. Such valves shall be labeled to indicate the gas controlled and shall shut off only the gas to that single treatment facility. A remotely activated shutoff at the supply cylinder shall not be used for emergency shutoff. For clinical purposes, such a remote actuator shall not fail-close in the event of a loss of electric power. If remote actuators are the type that fail-open, it shall be mandatory that cylinder shutoff valves be closed whenever the system is not in use.

5.3.4.1.3 Where the central supply system supplies two single treatment facilities, each facility shall be provided with a shutoff valve so located in each treatment facility as to be accessible from the use-point locations in an emergency. Such valves shall be labeled to indicate the gas controlled and shall shut off only the gas to that single treatment facility. A remotely activated shutoff at the supply manifold shall not be used for emergency shutoff valves for dual treatment facility installations. For clinical purposes, such a remote actuator shall not fail-close in the event of a loss of electric power. If remote actuators are the type that fail-open, it shall be mandatory that cylinder shutoff valves be closed whenever the system is not in use.

5.3.4.1.4 Each riser supplied from the main line shall be provided with a shutoff valve adjacent to the riser connection. Riser valves shall remain accessible and shall not be obstructed.

5.3.5* Station and Service Inlets and Outlets.

5.3.5.1 Factory installed tubes on station outlets used for medical gases (i.e., oxygen and nitrous oxide) extending no more than 205 mm (8 in.) from the body of the terminal shall be not less than DN8 (NPS ¼) (⅜ in. O.D.) size with 8 mm (0.3 in.) minimum inside diameter.

5.3.5.2* The service outlet/inlet for Level 3 medical gas (i.e., oxygen and nitrous oxide) shall not be interchangeable with other service outlets/inlets [e.g., source for gas-powered devices (i.e., air or nitrogen), vacuum, or water].

5.3.5.3 The service inlet for Level 3 vacuum shall be permitted to be either a shutoff valve with a threaded female pipe connector or a quick-connect fitting with a single check valve.

5.3.6 Level 3 Manufactured Assemblies. (Reserved)

5.3.7 Level 3 Surface Mounted Medical Gas Rails. (Reserved)

5.3.8 Level 3 Pressure and Vacuum Indicators. (Reserved)

5.3.9 Level 3 Warning Systems.

5.3.9.1 Warning systems for medical gases (i.e., oxygen and nitrous oxide) in Level 3 facilities shall conform to the alarm functions of a Level 1 facility as required in 5.1.9, except as follows:

Copyright National Fire Protection Association
Provided by IHS under license with NFPA
No reproduction or networking permitted without license from IHS
Not for Resale

(1) Area and local alarms shall not be required.
(2) Warning systems shall be permitted to have a single alarm panel.
(3) The alarm panel shall be located in an area of continuous surveillance while the facility is in operation.
(4) Pressure switches/sensors that monitor main line pressure shall be mounted at the source equipment with a pressure indicator(s) (lamp or LED) at the alarm panel. The audible and noncancelable alarm visual signals shall indicate if the pressure in the main line increases or decreases 20 percent from the normal operating pressure. Visual indicators shall remain until the situation that caused the alarm is resolved.
(5) When automatic changeover of source gases is required, the changeover alarm shall have a secondary indicator to suit the arrangement of the source equipment.
(6) A cancelable audible indication of each alarm condition that produces a sound at the alarm panel shall re-initiate the audible signal if another alarm condition occurs while the audible is silenced.
(7) Pressure switches/senses shall be installed downstream from any emergency shutoff valves required by 5.3.4.1 and shall comply with 5.3.9.1(4) and 5.3.9.1(5)

5.3.9.2 Systems for gases such as compressed air or nitrogen used to power devices, as well as Level 3 vacuum systems, shall not be required to have warning systems.

5.3.10 Level 3 Distribution.

5.3.10.1 Piping Materials for Field-Installed Level 3 Positive-Pressure Gas Systems.

5.3.10.1.1 Piping for Medical Gases. Piping for Level 3 positive-pressure nonflammable medical gases (i.e., oxygen and nitrous oxide) shall meet the requirements in 5.3.10.1.1.1 through 5.3.10.1.1.5.

5.3.10.1.1.1 Tubes, valves, fittings, station outlets, and other piping components in medical gas systems shall have been cleaned for oxygen service by the manufacturer prior to installation in accordance with CGA G-4.1 *Cleaning Equipment for Oxygen Service*.

5.3.10.1.1.2 Each length of tube shall be delivered plugged or capped by the manufacturer and kept sealed until prepared for installation.

5.3.10.1.1.3 Fittings, valves, and other components shall be delivered sealed and labeled by the manufacturer and kept sealed until prepared for installation.

5.3.10.1.1.4 Tubes shall be hard-drawn seamless copper ASTM B 819, *Standard Specification for Seamless Copper Tube for Medical Gas Systems*, medical gas tube, Type L or K.

5.3.10.1.1.5 ASTM B 819, *Standard Specification for Seamless Copper Tube for Medical Gas Systems*, medical gas tube shall be identified by the manufacturer's markings "OXY," "MED," "OXY/MED," "OXY/ACR," or "ACR/MED" in blue (Type L) or green (Type K).

5.3.10.1.2 Piping for Level 3 Gas-Powered Devices. Tubes shall be hard-drawn seamless copper and one of the following:

(1) ASTM B 819, *Standard Specification for Seamless Copper Tube for Medical Gas Systems*, medical gas tube (Type K or L)
(2) ASTM B 88, *Standard Specification for Seamless Copper Water Tube*, water tube (Type K or L)
(3) ASTM B 280, *Standard Specification for Seamless Copper Tubing for Air Conditioning and Refrigeration Field Service*, ACR tube (O.D. size), except that tube installed underground or within floor slabs shall be permitted to be soft annealed temper.

5.3.10.2 Piping Materials for Field-Installed Level 3 Vacuum Systems.

5.3.10.2.1 In copper piping systems, the tubes shall be hard-drawn seamless copper and one of the following:

(1) ASTM B 819, *Standard Specification for Seamless Copper Tube for Medical Gas Systems*, medical gas tube (Type K or L)
(2) ASTM B 88, *Standard Specification for Seamless Copper Water Tube*, water tube (Type K, L, or M)
(3) ASTM B 280, *Standard Specification for Seamless Copper Tubing for Air Conditioning and Refrigeration Field Service*, ACR tube (O.D. size), except that tube installed underground or within floor slabs shall be permitted to be soft annealed temper.

5.3.10.2.2 Copper tube installed underground or within floor slabs shall be permitted to be soft annealed temper.

5.3.10.2.3 In plastic piping systems, the pipe shall be polyvinylchoride (PVC) plastic, Schedule 40 minimum.

5.3.10.3 Fittings.

5.3.10.3.1 Turns, offsets, and other changes in direction in medical gas piping, copper Level 3 vacuum piping, and piping for gas-powered devices shall be made with brazed wrought copper capillary fittings complying with ASME B16.22, *Wrought Copper and Copper Alloy Solder-Joint Pressure Fittings*, or brazing fittings complying with ASME B16.50, *Wrought Copper and Copper Alloy Braze-Joint Pressure Fittings*.

5.3.10.3.2 Cast copper alloy fittings shall not be used where joints are brazed.

5.3.10.3.3 Branch connections in copper vacuum piping systems shall be permitted to be made using mechanically formed, drilled, and extruded tee-branch connections that are formed in accordance with the tool manufacturer's instructions, and brazed.

5.3.10.3.4 Turns, offsets, and other changes in direction in plastic Level 3 vacuum piping shall be made with solvent-cemented PVC plastic pressure fittings, Schedule 40 minimum.

5.3.10.4 Threaded Joints. Threaded joints in Level 3 gas-powered systems and vacuum distribution piping shall meet the following requirements:

(1) Be limited to connections to pressure/vacuum indicators, alarm devices, and source equipment
(2) Have tapered threads complying with ASME B1.20.1, *Pipe Threads, General Purpose, Inch*
(3) Be made up with polytetrafluoroethylene (such as Teflon™) tape or other thread sealant recommended for oxygen service, with the sealant applied to the male threads only

5.3.10.5 Soldered Joints. Soldered joints in copper Level 3 vacuum and Level 3 gas-powered systems piping shall be made in accordance with ASTM B 828, *Standard Practice for Making Capillary Joints by Soldering of Copper and Copper Alloy Tube and Fittings*, using a "lead-free" solder filler metal containing not more than 0.2 percent lead by volume.

5.3.10.6 Solvent-Cemented Joints. Solvent-cemented joints in plastic Level 3 vacuum piping shall be in accordance with

Copyright National Fire Protection Association
Provided by IHS under license with NFPA
No reproduction or networking permitted without license from IHS
Not for Resale

ASTM D 2855, *Standard Practice for Making Solvent-Cemented Joints with Poly(Vinyl Chloride) (PVC) Pipe and Fittings*.

5.3.10.7 Brazed Joints.

5.3.10.7.1 General Requirements.

5.3.10.7.1.1 Brazed joints shall be made using a brazing alloy that exhibits a melting temperature in excess of 538°C (1000°F) to retain the integrity of the piping system in the event of fire exposure.

5.3.10.7.1.2 Brazed tube joints shall be the socket type.

5.3.10.7.1.3 Filler metals shall bond with and be metallurgically compatible with the base metals being joined.

5.3.10.7.1.4 Filler metals shall comply with ANSI/AWS A5.8, *Specification for Filler Metals for Brazing and Braze Welding*.

5.3.10.7.1.5 Copper-to-copper joints shall be brazed using a copper–phosphorus or copper–phosphorus–silver brazing filler metal (BCuP series) without flux.

5.3.10.7.1.6 Joints to be brazed in place shall be accessible for necessary preparation, assembly, heating, filler application, cooling, cleaning, and inspection.

5.3.10.7.2 Cutting Tube Ends.

5.3.10.7.2.1 Tube ends shall be cut square using a sharp tubing cutter to avoid deforming the tube.

5.3.10.7.2.2 The cutting wheels on tubing cutters shall be free from grease, oil, or other lubricant not recommended for oxygen service.

5.3.10.7.2.3 The cut ends of the tube shall be deburred with a sharp, clean deburring tool, taking care to prevent chips from entering the tube.

5.3.10.7.3 Cleaning Joints for Brazing.

5.3.10.7.3.1 The interior surfaces of tubes, fittings, and other components that are cleaned for oxygen service shall be stored and handled to avoid contamination prior to assembly and brazing.

5.3.10.7.3.2 The exterior surfaces of tube ends shall be cleaned prior to brazing to remove any oxides and surface dirt and to roughen the surfaces to prepare them for brazing.

5.3.10.7.3.3 If the interior surfaces of fitting sockets that were cleaned for oxygen become contaminated prior to brazing, they shall be re-cleaned for oxygen in accordance with 5.3.10.7.3.9 and be cleaned for brazing with a clean, oil-free wire brush.

5.3.10.7.3.4 Nonabrasive pads shall be used to clean the exterior surfaces of tube ends.

5.3.10.7.3.5 The use of steel wool or sand cloth shall be prohibited.

5.3.10.7.3.6 The cleaning process shall not result in grooving of the surfaces to be joined.

5.3.10.7.3.7 After being abraded, the surfaces shall be wiped using a clean, lint-free white cloth.

5.3.10.7.3.8 Tubes, fittings, valves, and other components shall be visually examined internally before being joined to verify that they have not become contaminated for oxygen service (if so required) and that they are free of obstructions or debris.

5.3.10.7.3.9 The interior surfaces of tube ends, fittings, and other components that were cleaned for oxygen service by the manufacturer, but become contaminated prior to being installed, shall be permitted to be re-cleaned on-site by the installer by thoroughly scrubbing the interior surfaces with a clean, hot water/alkaline solution, such as sodium carbonate or trisodium phosphate, mixed 450 g to 11 L (1 lb to 3 gal) of potable water and thoroughly rinsing them with clean, hot potable water.

5.3.10.7.3.10 Other aqueous cleaning solutions shall be permitted to be used for the on-site re-cleaning permitted in 5.3.10.7.3.9, provided that they are as recommended in CGA G-4.1, *Cleaning Equipment for Oxygen Service*, and are listed in CGA O2-DIR, *Directory of Cleaning Agents for Oxygen Service*.

5.3.10.7.3.11 Material that has become contaminated internally and is not clean for oxygen service (if so required) shall not be installed.

5.3.10.7.3.12 Joints shall be brazed within 1 hour after the surfaces are cleaned for brazing.

5.3.10.7.4 Brazing Dissimilar Metals.

5.3.10.7.4.1 Flux shall only be used when brazing dissimilar metals, such as copper and bronze or brass, using a silver (BAg series) brazing filler metal.

5.3.10.7.4.2 Surfaces shall be cleaned for brazing in accordance with 5.3.10.7.3.

5.3.10.7.4.3 Flux shall be applied sparingly to minimize contamination of the inside of the tube with flux.

5.3.10.7.4.4 The flux shall be applied and worked over the cleaned surfaces to be brazed using a stiff, stainless steel bristle brush to ensure complete coverage and wetting of the surfaces with flux.

5.3.10.7.4.5 Where possible, short sections of copper tube shall be brazed onto the noncopper component and the interior of the subassembly shall be cleaned of flux prior to installation in the piping system.

5.3.10.7.4.6 On joints DN20 (NPS ¾) (⅞ in. O.D.) size and smaller, flux-coated brazing rods shall be permitted to be used in lieu of applying flux to the surfaces being joined.

5.3.10.7.5* Nitrogen Purge.

5.3.10.7.5.1 While being brazed, joints shall be continuously purged with oil-free, dry Nitrogen NF to prevent the formation of copper oxide on the inside surfaces of the joint.

5.3.10.7.5.2 The source of the purge gas shall be monitored and the installer shall be audibly alerted when the content is low.

5.3.10.7.5.3 The purge gas flow rate shall not produce a positive pressure in the piping system.

5.3.10.7.5.4 The purge gas flow rate shall be controlled by the use of a pressure regulator and flowmeter, or combination thereof.

5.3.10.7.5.5 Pressure regulators alone shall not be used to control purge gas flow rates.

5.3.10.7.5.6 During and after installation, openings in the piping system shall be kept capped or plugged to maintain a nitrogen atmosphere within the piping and to prevent debris or other contaminants from entering the system.

Copyright National Fire Protection Association
Provided by IHS under license with NFPA
No reproduction or networking permitted without license from IHS
Not for Resale

5.3.10.7.5.7 While a joint is being brazed, a discharge opening shall be provided on the opposite side of the joint from where the purge gas is being introduced.

5.3.10.7.5.8 The flow of purge gas shall be maintained until the joint is cool to the touch.

5.3.10.7.5.9 After the joint has cooled, the purge discharge opening shall be plugged or capped to prevent contamination of the inside of the tube and maintain the nitrogen atmosphere within the piping system.

5.3.10.7.5.10 The final connection of new piping to an existing in-use pipeline shall be permitted to be made without the use of a nitrogen purge.

5.3.10.7.5.11 After a final connection in a Level 3 positive-pressure gas pipeline is made without a nitrogen purge, an outlet in the immediate downstream zone of the affected portion(s) of both the new and existing in-use piping shall be tested in accordance with 5.3.12.3.8, Verifier Final Tie-In Test.

5.3.10.7.6 Assembling and Heating Joints.

5.3.10.7.6.1 Tube ends shall be inserted fully into the socket of the fitting.

5.3.10.7.6.2 Where flux is permitted, the joint shall be heated slowly until the flux has liquefied.

5.3.10.7.6.3 After flux is liquefied, or where flux is not permitted to be used, the joint shall be heated quickly to the brazing temperature, taking care not to overheat the joint.

5.3.10.7.6.4 Techniques for heating the joint; applying the brazing filler metal; and making horizontal, vertical, and large-diameter joints shall be as stated in sections on Applying Heat and Brazing and Horizontal and Vertical Joints in Chapter VII, Brazed Joints in the CDA *Copper Tube Handbook*.

5.3.10.7.7 Inspection of Brazed or Soldered Joints.

5.3.10.7.7.1 After brazing or soldering, the outside of all joints shall be cleaned by washing with water and a wire brush to remove any residue and permit clear visual inspection of the joint.

5.3.10.7.7.2 Where flux has been used, the wash water shall be hot.

5.3.10.7.7.3 Each joint shall be visually inspected after cleaning the outside surfaces.

5.3.10.7.7.4 Joints exhibiting the following conditions shall not be permitted:

(1) Flux or flux residue (when flux or flux-coated BAg rods are used with dissimilar metals)
(2) Base metal melting or erosion
(3) Unmelted filler metal
(4) Failure of the filler metal to be clearly visible all the way around the joint at the interface between the socket and the tube
(5) Cracks in the tube or component
(6) Cracks in the braze or solder filler metal
(7) Failure of the joint to hold the test pressure or vacuum under the installer-performed initial pressure or vacuum test (5.3.12.2.3 or 5.3.12.2.4) and standing pressure or vacuum test (5.3.12.2.7 or 5.3.12.2.8).

5.3.10.7.7.5 Joints that are identified as defective under conditions 5.3.10.7.7.4(2) or 5.3.10.7.7.4(5) shall be replaced.

5.3.10.7.7.6 Joints that are found to be defective under conditions 5.3.10.7.7.4(1), 5.3.10.7.7.4(3), 5.3.10.7.7.4(4), 5.3.10.7.7.4(6), or 5.3.10.7.7.4(7) shall be permitted to be repaired, except that no joint shall be reheated more than once before being replaced.

5.3.10.8 Special Joints.

5.3.10.8.1 The following joints shall be prohibited throughout Level 3 medical gas (i.e., oxygen and nitrous oxide) pipeline systems:

(1) Flared and compression connections, including connections to station outlets and inlets, alarm devices, and other components
(2) Other straight-threaded connections, including unions

5.3.10.8.2 Flared and compression connections shall be permitted in piping for Level 3 gas-powered devices and Level 3 vacuum in junction boxes, and where exposed at station outlets/inlets and source equipment.

5.3.10.9 Special Fittings. The following special fittings shall be permitted to be used in lieu of brazed joints:

(1) Memory-metal couplings having temperature and pressure ratings joints not less than that of a brazed joint
(2) Listed or approved metallic gas tube fittings that, when made up, provide a permanent joint having the mechanical, thermal, and sealing integrity of a brazed joint
(3) Axially swaged, elastic strain preload fittings providing metal to metal seal having pressure and temperature ratings not less than that of a brazed joint and when complete are permanent and nonseparable.

5.3.10.10 Installation of Level 3 Piping and Equipment.

5.3.10.10.1 Qualification of Installers.

5.3.10.10.1.1 The installation of Level 3 gas and vacuum systems shall be made by qualified, competent technicians who are experienced in making such installations.

5.3.10.10.1.2 The installers of Level 3 medical gas systems (i.e., oxygen and nitrous oxide) shall be qualified under the requirements of ASSE 6010, *Professional Qualifications Standard for Medical Gas Systems Installers*.

5.3.10.10.1.3 Brazing on medical gas system pipelines shall be performed by individuals who are qualified under the provisions of 5.3.10.10.15.

5.3.10.10.1.4 Prior to any installation work involving brazing, the installer of Level 3 medical gas piping shall provide documentation for the qualification of brazing procedures and individual brazers that is required under 5.3.10.10.15.

5.3.10.10.2 Pipe Sizing. Piping systems shall be designed and sized to deliver the required flow rates at the utilization pressures.

5.3.10.10.3* Minimum Pipe Sizes.

5.3.10.10.3.1 Mains, branches, and drops to individual service outlets in Level 3 oxygen piping systems shall be not less than DN10 (NPS ⅜ in.) (½ in. O.D.) size, but at least one size larger than the piping for nitrous oxide.

5.3.10.10.3.2 Mains, branches, and drops to individual service outlets in Level 3 nitrous oxide and inlets in the following piping systems shall be not less than DN8 (NPS ¼ in.) (⅜ in. O.D.) size.

Copyright National Fire Protection Association
Provided by IHS under license with NFPA
No reproduction or networking permitted without license from IHS
Not for Resale

5.3.10.10.3.3 Mains, branches, and drops to individual service outlets/inlets in Level 3 piping systems for gas powered devices and vacuum shall not be the same as the sizes used for oxygen and nitrous oxide.

5.3.10.10.3.4 Runouts to alarm panels and connecting tubing for pressure/vacuum indicators and alarm devices shall be permitted to be DN8 (NPS ⅛) (¼ in. O.D.) size.

5.3.10.10.4 Protection of Piping. Piping shall be protected against freezing, corrosion, and physical damage.

5.3.10.10.4.1 Piping exposed in corridors and other areas where subject to physical damage from the movement of carts, stretchers, portable equipment, or vehicles shall be protected.

5.3.10.10.4.2 Tubing for Level 3 medical gas (i.e., oxygen and nitrous oxide) tubing that is underground within buildings or embedded in concrete floors or walls shall be installed in a continuous conduit.

5.3.10.10.5 Location of Piping.

5.3.10.10.5.1 Piping for Level 3 medical gases (i.e., oxygen and nitrous oxide) shall be located in accordance with 5.3.10.10.5.1(A) through 5.3.10.10.5.1(C):

(A) Piping shall be permitted to be installed overhead wherever possible.

(B) Piping shall not be installed in electrical switchgear rooms, elevator shafts, and areas having open flames.

(C) Medical gas piping (i.e., oxygen and nitrous oxide) shall not be located where subject to contact with oil.

5.3.10.10.5.2 Piping for Level 3 gas-powered devices, and Level 3 vacuum systems shall be located in accordance with 5.3.10.10.5.2(A) and 5.3.10.10.5.2(B):

(A) Piping shall be permitted to be installed at the following locations:

(1) Under floor or underground
(2) Underground within buildings
(3) Aboveground, within walls, within ceilings

(B) Piping shall not be installed in electrical switchgear rooms, elevator shafts, and areas having open flames, except for the following locations:

(1) Room locations for Level 3 gas-powered devices and Level 3 vacuum systems.
(2) Room locations for secondary distribution circuit panels and breakers having a maximum voltage rating of 600 volts.

5.3.10.10.6 Pipe Support.

5.3.10.10.6.1 Piping shall be supported from the building structure in accordance with MSS SP-69, *Pipe Hangers and Supports — Selection and Application.*

5.3.10.10.6.2 Hangers and supports shall comply with MSS SP-58, *Pipe Hangers and Supports — Materials, Design, and Manufacture.*

5.3.10.10.6.3 Hangers for copper tube shall be sized for copper tube and have a copper finish.

5.3.10.10.6.4 In potentially damp locations, copper tube hangers and supports that are in contact with the tube shall be plastic-coated or otherwise be electrically insulated from the tube.

5.3.10.10.6.5 Maximum support spacing for copper tubing shall be in accordance with Table 5.3.10.10.6.5.

Table 5.3.10.10.6.5 Maximum Pipe Support Spacing

Pipe Size	Hanger Spacing mm	Hanger Spacing ft
DN8 (NPS ¼) (⅜ in. O.D.)	1520	5
DN10 (NPS ⅜) (½ in. O.D.)	1830	6
DN15 (NPS ½) (⅝ in. O.D.)	1830	6
DN20 (NPS ¾) (⅞ in. O.D.)	2130	7
DN25 (NPS 1) (1⅛ in. O.D.)	2440	8
DN 32 (NPS 1¼) (1⅜ in. O.D.)	2740	9
DN40 (NPS 1½) (1⅝ in. O.D.) and larger	3050	10
Vertical risers, all sizes		
Every floor, but not to exceed:	4570	15

5.3.10.10.6.6 PVC plastic piping for Level 3 vacuum systems shall be supported at a maximum spacing of 1.22 m (4 ft), except that vertical piping shall be supported at every floor and with mid-story guides.

5.3.10.10.6.7 Where required, Level 3 gas and vacuum piping shall be seismically restrained against earthquakes in accordance with the applicable building code.

5.3.10.10.7 Piping Within Floor Slabs and Underground Within Buildings.

5.3.10.10.7.1 The tube(s) shall be installed in one (or more) continuous conduits that are of sufficient size to permit subsequent installation, removal, and replacement of the gas and/or vacuum lines.

5.3.10.10.7.2 Each tube pulled into the conduit shall be a continuous length having no joints within the conduit.

5.3.10.10.8 Underground Piping Outside of Buildings.

5.3.10.10.8.1 Buried piping outside of buildings shall be installed below the local level of frost penetration.

5.3.10.10.8.2 The installation procedure for underground piping shall protect the piping from physical damage while being backfilled.

5.3.10.10.8.3 If underground piping is protected by a conduit, cover, or other enclosure, the following requirements shall be met:

(1) Access during construction shall be provided at the joints for visual inspection and leak testing.
(2) The conduit, cover, or enclosure shall be self-draining and not retain groundwater in prolonged contact with the pipe.

5.3.10.10.8.4 Buried piping that will be subject to surface loads shall be buried at a depth that will protect the piping and or its enclosure from excessive stresses.

5.3.10.10.8.5 The minimum backfilled cover above the top of the pipe or its enclosure for buried piping outside of buildings shall be 900 mm (36 in.), except that the minimum cover shall be permitted to be reduced to 450 mm (18 in.) where physical damage is otherwise prevented.

5.3.10.10.8.6 Trenches shall be excavated so that the pipe or its enclosure has firm, substantially continuous bearing on the bottom of the trench.

Copyright National Fire Protection Association
Provided by IHS under license with NFPA
No reproduction or networking permitted without license from IHS
Not for Resale

5.3.10.10.8.7 Backfill shall be clean and compacted so as to protect and uniformly support the pipe or its enclosure.

5.3.10.10.8.8 A continuous tape or marker placed immediately above the pipe or its enclosure shall clearly identify the pipeline by specific name.

5.3.10.10.8.9 A continuous warning means shall also be provided above the pipeline at approximately one-half the depth of bury.

5.3.10.10.8.10 Where buried piping is installed through a wall sleeve, the ends of the sleeve shall be sealed to prevent the entrance of ground water into the building.

5.3.10.10.9 Branch Takeoffs. Runouts from horizontal piping for medical gas (i.e., oxygen and nitrous oxide) shall be taken off above the centerline of the main or branch pipe and rise vertically at an angle of not more than 45 degrees from vertical.

5.3.10.10.10 Special Requirements for Level 3 Vacuum Piping.

5.3.10.10.10.1 Horizontal piping in Level 3 vacuum systems shall be sloped a minimum of 7 mm per 3.05 m (¼ in. per 10 ft) toward the vacuum source equipment.

5.3.10.10.10.2 Horizontal piping shall include no sags or low points that will permit fluids or debris to accumulate.

5.3.10.10.10.3 Accessible cleanouts that are limited to vertical downflow shall be provided where necessary to clear the piping of obstructions.

5.3.10.10.11 Hose and Flexible Connectors.

5.3.10.10.11.1 Hose and flexible connectors, both metallic and nonmetallic, shall be no longer than necessary and shall not penetrate or be concealed in walls, floors, ceilings, or partitions.

5.3.10.10.11.2 Flexible connectors, metallic or nonmetallic, shall have a minimum burst pressure, with a gauge pressure of 6895 kPa (1000 psi).

5.3.10.10.12 Prohibited System Interconnections.

5.3.10.10.12.1 Two or more piping systems for medical gases, gas-powered devices, and Level 3 vacuum shall not be interconnected for testing or any other reason.

5.3.10.10.12.2 Leak testing shall be accomplished by separately charging and testing each individual piping system.

5.3.10.10.13 System Manufacturer's Instructions.

5.3.10.10.13.1 The installation of individual components shall be made in accordance with the instructions of the system manufacturer.

5.3.10.10.13.2 Such instructions shall include directions and information deemed by the system manufacturer to be necessary for attaining proper operation, testing, and maintenance of the system.

5.3.10.10.13.3 Copies of system manufacturer's instructions shall be left with the system owner.

5.3.10.10.14 Changes in System Use.

5.3.10.10.14.1 Where a Level 3 positive-pressure gas piping distribution system originally used or constructed for use at one pressure or for one gas is converted for operation at another pressure or for another gas, all provisions of 5.3.10 shall apply as if the system were new.

5.3.10.10.14.2 Piping for Level 3 gas-powered devices or Level 3 vacuum shall not be permitted to be converted for use as a medical gas piping system (i.e., oxygen or nitrous oxide).

5.3.10.10.15 Qualification of Brazing Procedures and Brazing.

5.3.10.10.15.1 Brazing procedures and brazer performance for the installation of Level 3 brazed piping shall be qualified the same as for Level 1 piping, in accordance with either Section IX, Welding and Brazing Qualifications, of the ASME *Boiler and Pressure Vessel Code*, or AWS B2.2, *Standard for Brazing Procedure and Performance Qualification*, both as modified by 5.3.10.10.15.2 through 5.3.10.10.15.5.

5.3.10.10.15.2 Brazers shall be qualified by visual examination of the test coupon followed by sectioning.

5.3.10.10.15.3 The brazing procedure specification shall address cleaning, joint clearance, overlap, internal purge gas, purge gas flow rate, and filler metal.

5.3.10.10.15.4 The brazing procedure qualification record and the record of brazer performance qualification shall document filler metal used, cleaning, joint clearance, overlap, internal purge gas and flow rate during brazing of coupon, and the absence of internal oxidation in the completed coupon.

5.3.10.10.15.5 Brazing procedures qualified by a technically competent group or agency shall be permitted under the following conditions:

(1) The brazing procedure specification and the procedure qualification record meet the requirements of this standard.
(2) The employer obtains a copy of both the brazing procedure specification and the supporting qualification records from the group or agency and signs and dates these records, thereby accepting responsibility for the qualifications that were performed by the group or agency.
(3) The employer qualifies at least one brazer following each brazing procedure specification used.

5.3.10.10.15.6 An employer shall be permitted to accept brazer qualification records of a previous employer under the following conditions:

(1) The brazer has been qualified following the same or an equivalent procedure that the new employer uses.
(2) The new employer obtains a copy of the record of brazer performance qualification tests from the previous employer and signs and dates these records, thereby accepting responsibility for the qualifications performed by the previous employer.

5.3.10.10.15.7 Performance qualifications of brazers shall remain in effect indefinitely unless the brazer does not braze with the qualified procedure for a period exceeding 6 months, or there is a specific reason to question the ability of the brazer.

5.3.11 Labeling and Identification.

5.3.11.1 Pipe Labeling.

5.3.11.1.1 Piping shall be labeled by stenciling or adhesive markers that identify the system.

5.3.11.1.2 Pipe labels shall show the name of the gas/vacuum system or the chemical symbol.

5.3.11.1.3 Where positive-pressure gas piping systems operate at pressures other than the standard gauge pressure of 345 kPa to 380 kPa (50 psi to 55 psi) or gauge pressure of 1100 kPa to 1275 kPa (160 psi to 185 psi) for nitrogen, the pipe labels shall

Copyright National Fire Protection Association
Provided by IHS under license with NFPA
No reproduction or networking permitted without license from IHS
Not for Resale

include the nonstandard operating pressure in addition to the name or symbol of the gas.

5.3.11.1.4 Pipe labels shall be located as follows:

(1) At intervals of not more than 6.1 m (20 ft)
(2) At least once in or above every room
(3) On both sides of walls or partitions penetrated by the piping
(4) At least once in every story height traversed by risers

5.3.11.2 Shutoff Valves.

5.3.11.2.1 Shutoff valves shall be identified as to the following:

(1) The name or chemical symbol for the specific system
(2) The name of the room(s) or area(s) served
(3) A caution to not close (or open) the valve except in an emergency

5.3.11.2.2 Where positive-pressure gas systems operate at pressures other than the standard gauge pressure of 345 kPa to 380 kPa (50 psi to 55 psi) or gauge pressure of 1100 kPa to 1275 kPa (160 psi to 185 psi) for nitrogen, the valve identification shall also include the nonstandard operating pressure.

5.3.11.3 Service Outlets and Inlets.

5.3.11.3.1 Service outlets and inlets shall be identified as to the name or chemical symbol for the specific gas or vacuum provided.

5.3.11.3.2 Where positive-pressure gas systems operate at pressures other than the standard gauge pressure of 345 kPa to 380 kPa (50 psi to 55 psi) or gauge pressure of 1100 kPa to 1275 kPa (160 psi to 185 psi) for nitrogen, the station outlet identification shall include the nonstandard operating pressure.

5.3.12 Performance Criteria and Testing — Level 3 (Medical Gas, Gas-Powered Devices, Vacuum).

5.3.12.1 General.

5.3.12.1.1 Inspection and testing shall be performed on all new piped gas systems, additions, renovations, temporary installations, or repaired systems, to assure the facility, by a documented procedure, that all applicable provisions of this document have been adhered to and system integrity has been achieved or maintained.

5.3.12.1.2 Inspection and testing shall include all components of the system or portions thereof including, but not limited to, medical gas source(s), compressed air source systems (e.g., compressors, dryers, filters, regulators), alarms and monitoring safeguards, pipelines, isolation valves, and service outlets and inlets.

5.3.12.1.3 All systems that are breached and components that are subjected to additions, renovations, or replacement (e.g., new medical gas sources, compressors, dryers, alarms) shall be inspected and tested.

5.3.12.1.4 Systems shall be deemed breached at the point of pipeline intrusion by physical separation or by system component removal, replacement, or addition.

5.3.12.1.5 Breached portions of the systems subject to inspection and testing shall be confined to only the specific altered zone and components in the immediate zone or area that is located upstream for vacuum systems and downstream for pressure gases at the point or area of intrusion.

5.3.12.1.6 The inspection and testing reports shall be submitted directly to the party that contracted for the testing, who shall submit the report through channels to the responsible authority and any others that are required.

5.3.12.1.7 Reports shall contain detailed listings of all findings and results.

5.3.12.1.8 The responsible facility authority shall review these inspection and testing records prior to the use of any systems to assure that all findings and results of the inspection and testing have been successfully completed.

5.3.12.1.9 All documentation pertaining to inspections and testing shall be maintained on-site within the facility.

5.3.12.1.10 Before piping systems are initially put into use, the Level 3 health care facility authority shall be responsible for ascertaining that the gas/vacuum delivered at each outlet/inlet is that shown on the outlet/inlet label and that the proper connecting fittings are installed for the specific gas/vacuum. *(See 5.3.12.1.11.)*

5.3.12.1.11 Acceptance of the verifier's reports required under 5.3.12.3, System Verification, shall be permitted to satisfy the requirements of 5.3.12.1.10.

5.3.12.2 Initial Tests.

5.3.12.2.1 General.

5.3.12.2.1.1 The tests required by 5.3.12.3.1 through 5.3.12.3.12 shall be performed prior to the tests listed in 5.3.12.3, System Verification, by one or more of the following:

(1) The installer
(2) A representative of the system supplier
(3) A representative of the system manufacturer

5.3.12.2.1.2 The test gas for positive-pressure gas systems shall be oil-free, dry Nitrogen NF.

5.3.12.2.1.3 Where manufactured assemblies are to be installed, the tests required under 5.3.12.2 shall be performed as follows:

(1) After completion of the distribution piping
(2) Prior to installation or connection of manufactured assemblies supplied through flexible hoses or flexible tubing
(3) At all station outlets/inlets on manufactured assemblies supplied through copper tubing

5.3.12.2.2 Initial Blow Down. Piping in Level 3 positive-pressure gas distribution systems shall be blown clear by means of oil-free, dry Nitrogen NF as follows:

(1) After installation of the distribution piping
(2) Before installation of station outlets and other system components (i.e., pressure alarm devices, pressure indicators, pressure relief valves, manifolds, source equipment)

5.3.12.2.3 Initial Pressure Test for Positive-Pressure Gas Systems and Copper Level 3 Vacuum Piping.

5.3.12.2.3.1 Each section of the piping in Level 3 positive-pressure gas piping systems and copper Level 3 vacuum systems shall be pressure tested using oil-free, dry Nitrogen NF.

5.3.12.2.3.2 Initial pressure tests shall be conducted as follows:

(1) After installation of station outlets/inlets rough-in assemblies. Test caps shall be permitted to be used.

Copyright National Fire Protection Association
Provided by IHS under license with NFPA
No reproduction or networking permitted without license from IHS
Not for Resale

(2) Prior to the installation of components of the distribution piping system that would be damaged by the test pressure (i.e., pressure/vacuum alarm devices, pressure/vacuum indicators, line pressure relief valves).

5.3.12.2.3.3 Where Level 3 vacuum piping systems include plastic piping, they shall be inspected to assure that there are no visible cross-connections to positive-pressure gas piping systems prior to applying test pressures to the positive-pressure systems.

5.3.12.2.3.4 The source shutoff valves for all piping systems shall remain closed during these tests.

5.3.12.2.3.5 The test pressure for positive-pressure gas piping shall be 1.5 times the system working pressure, but not less than a gauge pressure of 1035 kPa (150 psi).

5.3.12.2.3.6 The test pressure for copper Level 3 vacuum piping shall be a gauge pressure of 105 kPa (15 psi).

5.3.12.2.3.7 The test pressure shall be maintained until each joint has been examined for leakage by means of soapy water or other equally effective means of leak detection.

5.3.12.2.3.8 Leaks, if any, shall be located, replaced (if permitted) or repaired (if required), and retested.

5.3.12.2.4 Initial Leak Tests — PVC Level 3 Vacuum Piping. Plastic Level 3 vacuum piping shall be leak-tested under vacuum conditions.

5.3.12.2.4.1 Plastic Level 3 vacuum piping shall not be tested with compressed gas.

5.3.12.2.4.2 Leak tests shall be conducted after installation of station inlets.

5.3.12.2.4.3 The piping being tested shall be subjected to a vacuum of not less than 485 mm (19 in.) gauge HgV, using either the vacuum source equipment or a vacuum test pump.

5.3.12.2.4.4 The test vacuum shall be maintained until each joint has been examined for leakage.

5.3.12.2.5 Initial Cross-Connection Test. The installer shall determine that no cross-connections exist between the various Level 3 gas and vacuum piping systems.

5.3.12.2.5.1 All Level 3 gas and vacuum piping systems shall be at atmospheric pressure.

5.3.12.2.5.2 Face plates for outlets/inlets shall be installed.

5.3.12.2.5.3 Level 3 vacuum piping systems shall be subjected to a vacuum of not less than 485 mm (19 in.) gauge HgV, using either the vacuum source equipment or a test pump.

5.3.12.2.5.4 Each individual system gas outlet and vacuum inlet in each piping system shall be checked to determine that the vacuum is present only at the inlets for the vacuum system being tested.

5.3.12.2.5.5 The vacuum piping system shall be relieved to atmospheric pressure.

5.3.12.2.5.6 The test gas for all positive-pressure gas piping systems shall be oil-free, dry Nitrogen NF.

5.3.12.2.5.7 Sources of test gas and vacuum shall be disconnected from all piping systems except for the one system being tested.

5.3.12.2.5.8 The positive-pressure gas system being tested shall be pressurized to a gauge pressure of 345 kPa (50 psi) with oil-free, dry Nitrogen NF.

5.3.12.2.5.9 Each individual system gas outlet and vacuum inlet in each installed piping system shall be checked to determine that the test gas is being dispensed only from the outlets in the piping system being tested.

5.3.12.2.5.10 The cross-connection test shall be repeated for each installed positive-pressure gas piping system.

5.3.12.2.5.11 The proper labeling and identification of system outlets/inlets shall be confirmed during these tests.

5.3.12.2.6 Initial Piping Purge Test. The outlets in each Level 3 positive-pressure gas piping system shall be purged to remove any particulate matter from the distribution piping.

5.3.12.2.6.1 The test gas shall be oil-free, dry Nitrogen NF.

5.3.12.2.6.2 Using appropriate adapters, each outlet shall be purged with an intermittent high-volume flow of test gas until the purge produces no discoloration in a clean white cloth.

5.3.12.2.6.3 The purging shall be started at the furthest outlet in the system and proceed towards the source equipment.

5.3.12.2.7 Initial Standing Pressure Test for Positive-Pressure Gas Piping. After successful completion of the initial pressure tests under 5.3.12.2.3, Level 3 positive-pressure gas distribution piping shall be subjected to a standing pressure test.

5.3.12.2.7.1 Tests shall be conducted after the installation of station outlet valve bodies and face plates, and other distribution system components (i.e., pressure alarm devices, pressure indicators, and line pressure relief valves).

5.3.12.2.7.2 The source valve shall be closed during this test.

5.3.12.2.7.3 The piping systems shall be subjected to a 24-hour standing pressure test using oil-free, dry Nitrogen NF.

5.3.12.2.7.4 Test pressures shall be 20 percent above the normal system operating line pressure.

5.3.12.2.7.5 At the conclusion of the tests, there shall be no change in the test pressure greater than a gauge pressure of 35 kPa (5 psi).

5.3.12.2.7.6 Leaks, if any, shall be located, repaired (if permitted), replaced (if required), and retested.

5.3.12.2.8 Initial Standing Vacuum Test for Vacuum Systems. Level 3 vacuum systems, with either plastic or copper piping, shall be subjected to a standing vacuum test.

5.3.12.2.8.1 The piping system shall be subjected to a vacuum of not less than 485 mm (19 in.) gauge HgV for 24 hours, using either the vacuum source equipment or a test source.

5.3.12.2.8.2 During the test, the source of test vacuum shall be disconnected from the piping system.

5.3.12.2.8.3 At the conclusion of the test, the vacuum shall not have reduced to less than 300 mm (12 in.) HgV.

5.3.12.2.8.4 Leaks, if any, shall be located, repaired (if permitted), replaced (if required), and retested.

5.3.12.3 System Verification.

5.3.12.3.1 General.

5.3.12.3.1.1 Verification tests shall be conducted on Level 3 medical gases (e.g., oxygen and nitrous oxide).

5.3.12.3.1.2 Verification tests shall be performed only after all tests required in 5.3.12.2, Initial Tests, have been completed on all positive-pressure and vacuum piping systems.

Copyright National Fire Protection Association
Provided by IHS under license with NFPA
No reproduction or networking permitted without license from IHS
Not for Resale

5.3.12.3.1.3 The test gas shall be oil-free, dry Nitrogen NF or the system gas where permitted.

5.3.12.3.1.4 Verification testing shall be conducted by a party technically competent and experienced in the field of medical gas and vacuum system verification and meeting the requirements of ASSE 6030, *Professional Qualifications Standard for Medical Gas Systems Verifiers.*

5.3.12.3.1.5 Verification testing shall be performed by a party other than the installing contractor.

5.3.12.3.1.6 All verification tests required under 5.3.12.3 shall be performed after installation of any manufactured assemblies supplied through flexible hose or tubing.

5.3.12.3.1.7 Where manufactured assemblies include multiple possible connection points for terminals, each possible position shall be tested independently.

5.3.12.3.1.8 For small projects affecting a limited number of areas where the use of nitrogen is impractical, the system gas shall be permitted to be used for the following tests:

(1) Standing pressure (5.3.12.3.2)
(2) Cross-connection (5.3.12.3.3)
(3) Warning system (5.3.12.3.4)
(4) Piping purge (5.3.12.3.5)
(5) Piping particulate (5.3.12.3.6)
(6) Piping purity (5.3.12.3.7)
(7) Operational pressure (5.3.12.3.9)

5.3.12.3.1.9 All verification test results shall be reported as required in 5.3.12.1.

5.3.12.3.2 Verifier Standing Pressure Test. Level 3 medical gas piping systems (i.e., oxygen and nitrous oxide) shall be subjected to a 10-minute standing pressure test at operating line pressure using the following procedures:

(1) After the system is filled with oil-free, dry Nitrogen NF or the system gas, the source valve and any zone valves shall be closed.
(2) The piping system downstream of the valves shall show no decrease in pressure after 10 minutes.
(3) Any leaks found shall be located, repaired (if permitted), replaced (if required), and retested.

5.3.12.3.3 Verifier Cross-Connection Test. After closing of walls and completion of the requirements of 5.3.12.2, Initial Tests, it shall be determined that no cross-connections exist between the Level 3 medical gas systems and any of the other positive-pressure and vacuum piping systems by use of the following method:

(1) Shut off the source of test gas for all positive-pressure gas piping systems and reduce systems to atmospheric pressure.
(2) Using oil-free, dry Nitrogen NF, or the system gas, pressurize one of the Level 3 medical gas piping systems to a gauge pressure of 345 kPa (50 psi).
(3) Test each positive-pressure gas outlet and Level 3 vacuum inlet using appropriate adapters to verify that the test gas pressure is present only at the outlets in the Level 3 medical gas piping system being tested.
(4) After it has been verified that a Level 3 medical gas piping system is free of cross-connections, disconnect the source of test gas and reduce the piping to atmospheric pressure.
(5) Proceed to test each Level 3 medical gas piping system until each is verified to be free of cross-connections.

5.3.12.3.4 Verifier Level 3 Warning System Tests.

5.3.12.3.4.1 All warning systems that are installed for Level 3 medical gases shall be verified to ensure that all components function correctly prior to placing the system into service.

5.3.12.3.4.2 Permanent records of these tests shall be maintained.

5.3.12.3.4.3 Warning systems that are part of an addition to an existing piping system shall be tested prior to connection of the new piping to the existing system.

5.3.12.3.4.4 Tests of warning systems for new installations shall be performed after the verifier's cross-connection testing (5.3.12.3.3), but before purging the piping (5.3.12.3.5) and performing the remaining verification tests (5.3.12.3.6 through 5.3.12.3.12).

5.3.12.3.4.5 Test gases shall be either oil-free, dry Nitrogen NF, or the gas of system designation.

5.3.12.3.4.6 The audible and noncancelable alarm signals in each single treatment facility shall be checked to verify that they are in a location that will be continuously attended while the facility is in operation.

5.3.12.3.4.7 The operation of the Level 3 line pressure alarms required by 5.3.9.1(4) shall be verified.

5.3.12.3.4.8 Audible and noncancelable visual signals in each single treatment facility shall indicate if the pressure in the Level 3 medical gas main line being monitored increases or decreases 20 percent from the normal operating pressure.

5.3.12.3.4.9 The operation of the Level 3 changeover alarms required by 5.3.9.1(5) shall be verified.

5.3.12.3.4.10 Audible and noncancelable visual signals shall indicate whenever automatic changeover occurs or is about to occur.

5.3.12.3.4.11 Where Level 3 medical gas systems include other alarm features that are not mandatory under 5.3.9, they shall be functionally tested in accordance with their intended purpose and the equipment manufacturer's recommendations.

5.3.12.3.5 Verifier Piping Purge Test. In order to remove any traces of particulate matter deposited in the pipelines as a result of construction, a heavy, intermittent purging of each Level 3 medical gas (i.e., oxygen and nitrous oxide) pipeline shall be done.

5.3.12.3.5.1 The appropriate adapter shall be obtained from the facility or manufacturer, and high purge rates of at least 230 SLPM (8 SCFM) shall be put on each outlet.

5.3.12.3.5.2 After the purge is started, it shall be rapidly interrupted several times until the purge produces no discoloration in a white cloth loosely held over the adapter during the purge.

5.3.12.3.5.3 In order to avoid possible damage to the outlet and its components, this test shall not be conducted using any implement other than the correct adapter.

5.3.12.3.6 Verifier Piping Particulate Test. The cleanliness of the piping in each Level 3 medical gas (i.e., oxygen and nitrous oxide) system shall be verified as follows:

(1) The test shall be performed using oil-free, dry Nitrogen NF or the system gas.

Copyright National Fire Protection Association
Provided by IHS under license with NFPA
No reproduction or networking permitted without license from IHS
Not for Resale

(2) A minimum of 1000 L (35 ft^3) of gas shall be filtered through a clean, white 0.45-micron filter at a minimum flow rate of 100 SLPM (3.5 SCFM).
(3) Each zone shall be tested at the outlet most remote from the source.
(4) The filter shall accrue no more than 0.001 g (1 mg) of matter from any outlet tested.

5.3.12.3.7 Verifier Piping Purity Test. For each Level 3 medical gas (i.e., oxygen and nitrous oxide) system, the purity of the piping system shall be verified as follows:

(1) These tests shall be performed with oil-free, dry Nitrogen NF or the system gas.
(2) The tests shall be for total hydrocarbons (as methane) and halogenated hydrocarbons, and compared with the source gas.
(3) This test shall be performed at the outlet most remote from the source.
(4) The difference between the two tests shall in no case exceed the following:
    (a) Total hydrocarbons, 1 ppm
    (b) Halogenated hydrocarbons, 2 ppm
(5) A test shall be conducted at the outlet most remote from the source and the moisture concentration shall not exceed 500 ppm or an equivalent pressure dew point of −12°C (10°F) at 345 kPa (50 psig).

5.3.12.3.8 Verifier Final Tie-In Test.

5.3.12.3.8.1 Prior to the connection of any new Level 3 medical gas piping to its source of supply, including extensions or additions to an existing piping system, the verification tests in 5.3.12.3.1 through 5.3.12.3.7 shall be successfully performed on the new work.

5.3.12.3.8.2 Each joint in the final connection between the new work and the existing system shall be leak-tested with the gas of system designation by means of soapy water or other means effective for use with oxygen.

5.3.12.3.8.3 For Level 3 medical gases, immediately after the final connection is made and leak-tested, the specific altered zone and components in the immediate zone or area that is downstream from the point or area of intrusion shall be purged per 5.3.12.3.5.

5.3.12.3.8.4 Before the new work is used for patient care, the following tests shall be performed for all Level 3 medical gas (i.e., oxygen and nitrous oxide) systems:

(1) Operational pressure (5.3.12.3.9)
(2) Gas concentration (5.3.12.3.10)

5.3.12.3.8.5 Permanent records of these tests shall be maintained in accordance with 5.3.13.7.1.

5.3.12.3.9 Verifier Operational Pressure Test. Operational pressure tests shall be performed at each station outlet in Level 3 medical gas piping systems (i.e., oxygen and nitrous oxide) where the user makes connections and disconnections.

5.3.12.3.9.1 Tests shall be performed using either oil-free, dry Nitrogen NF or the gas of system designation.

5.3.12.3.9.2 Medical gas outlets (i.e., oxygen and nitrous oxide) shall deliver 100 SLPM (3.5 SCFM) with a pressure drop of no more than 35 kPa (5 psi) and static pressure of 345 kPa to 380 kPa (50 psi to 55 psi).

5.3.12.3.10 Verifier Gas Concentration Test. After purging each Level 3 medical gas piping system with the gas of system designation, the following shall be performed:

(1) Each medical gas outlet (i.e., oxygen and nitrous oxide) shall be analyzed for concentration of gas, by volume.
(2) Analysis shall be conducted with instruments designed to measure the specific gas dispensed.
(3) Allowable concentrations shall be as follows:
    (a) Oxygen ≥ 99 percent oxygen
    (b)*Nitrous oxide ≥ 99 percent nitrous oxide

5.3.12.3.11 Labeling. The presence and correctness of labeling required by this standard for all Level 3 medical gas components (i.e., station outlets/inlets, shutoff valves, and alarm panels) shall be verified.

5.3.12.3.12 Source Equipment Verification.

5.3.12.3.12.1 General. Source equipment verification for Level 3 medical gases shall be performed following the installation of the interconnecting pipelines, accessories, and source equipment.

5.3.12.3.12.2 Use of Source Equipment for Pipeline Verification Tests. Where the source equipment and system gas is used for verification testing of the distribution piping, the source equipment shall be verified prior to verification of the distribution piping.

5.3.12.3.12.3 Source Equipment for Level 3 Medical Gases (Oxygen and Nitrous Oxide). The system apparatus shall be tested for proper function, including the changeover from primary to secondary supply (with its changeover signal), before the system is put into service.

5.3.12.4 Final Testing of Level 3 Systems for Gas-Powered Devices and Vacuum.

5.3.12.4.1 General.

5.3.12.4.1.1 Final testing of gas-powered device systems and vacuum systems shall be performed only after all tests required by 5.3.12.2, Initial Tests, have been performed.

5.3.12.4.1.2 The tests required by 5.3.12.4.2 through 5.3.12.4.8 shall be performed by one or more of the following:

(1) The installer
(2) A representative of the system supplier
(3) A representative of the system manufacturer
(4) A system verifier per 5.3.12.3.1.5

5.3.12.4.1.3 The test gas shall be oil-free, dry Nitrogen NF or the system gas where permitted.

5.3.12.4.2 Final Standing Pressure Test (Level 3 Gas-Powered Devices). Each gas-powered device piping system shall be subjected to a 10-minute standing pressure test at operating line pressure using the following procedures:

(1) After the system is filled with oil-free, dry Nitrogen NF or the system gas, the source valve and any zone valves shall be closed.
(2) The piping system downstream of the valves shall show no decrease in pressure after 10 minutes.
(3) Any leaks found shall be located, repaired (if permitted), replaced (if required), and retested.

Copyright National Fire Protection Association
Provided by IHS under license with NFPA
No reproduction or networking permitted without license from IHS
Not for Resale

5.3.12.4.3 Final Standing Vacuum Test (Level 3 Vacuum). Each Level 3 vacuum piping system shall be subjected to a 10-minute standing vacuum test at operating line vacuum using the following procedures:

(1) After the system has stabilized at the operating line vacuum, the source valve and any zone valves shall be closed.
(2) The piping system upstream of the valves shall show no decrease in vacuum after 10 minutes.
(3) Leaks, if any, shall be located, repaired (if permitted), replaced (if required), and retested.

5.3.12.4.4 Final Cross-Connection Test (Level 3 Gas-Powered Devices and Vacuum). After closing of walls and completion of the requirements of 5.3.12.2, Initial Tests, it shall be determined that no cross-connections exist between the piping systems for gas-powered devices and Level 3 vacuum using the following method:

(1) Where facilities have more than one gas or vacuum system, test each system separately.
(2) Shut off the source of test gas for all gas-powered device piping systems and reduce them to atmospheric pressure.
(3) Operate each Level 3 vacuum system at the normal system vacuum, using the source equipment.
(4) Each gas-powered device gas outlet and Level 3 vacuum inlet shall be tested with appropriate adapters to verify that vacuum is present only at the vacuum inlets in the system being tested and not at any gas-powered device gas outlets or inlets of other vacuum systems.
(5) Shut down the vacuum source equipment and slowly break the vacuum in the vacuum piping system, increasing its pressure to atmospheric.
(6) Test each Level 3 vacuum system until all are determined to be free of cross-connections.
(7) Using oil-free, dry Nitrogen NF or the system gas, pressurize the gas-powered device piping system to a gauge pressure of 345 kPa (50 psi).
(8) Test each gas-powered device gas outlet using appropriate adapters to verify that the test gas pressure is present only at the outlets in the gas-powered device system being tested.
(9) After it has been determined that a gas-powered device piping system is free of cross-connections, disconnect the source of test gas and reduce the piping to atmospheric pressure.
(10) Proceed to test each gas-powered device piping system until all are determined to be free of cross-connections.

5.3.12.4.5 Final Piping Purge Test (for Level 3 Gas-Powered Devices). In order to remove any traces of particulate matter deposited in the pipelines as a result of construction, a heavy, intermittent purging of each gas-powered device pipeline shall be done.

5.3.12.4.5.1 The appropriate adapter shall be obtained from the facility or manufacturer, and high purge rates shall be put on each outlet.

5.3.12.4.5.2 After the purge is started, it shall be rapidly interrupted several times until the purge produces no discoloration in a white cloth loosely held over the adapter during the purge.

5.3.12.4.5.3 In order to avoid possible damage to the outlet and its components, this test shall not be conducted using any implement other than the correct adapter.

5.3.12.4.6 Final Tie-In Test (Piping for Gas-Powered Devices and Level 3 Vacuum).

5.3.12.4.6.1 Prior to the connection of any new piping to its source of supply, including extensions or additions to an existing piping system, the final tests in 5.3.12.4.1 through 5.3.12.4.5 shall be successfully performed on the new work.

5.3.12.4.6.2 Each joint in the final connection between new work and an existing system shall be leak-tested with the gas of system designation or vacuum at the normal operating pressure by means of soapy water or other means effective for use with oxygen.

5.3.12.4.6.3 For gas-powered device piping, immediately after the final connection is made and leak-tested, the specific altered zone and components in the immediate zone or area that is downstream from the point or area of intrusion shall be purged per 5.3.12.4.5.

5.3.12.4.7 Labeling. The presence and correctness of labeling required by this standard for all Level 3 gas-powered device and vacuum system components (e.g., station outlets/inlets and shutoff valves) shall be checked.

5.3.12.4.8 Source Equipment Testing.

5.3.12.4.8.1 General. Source equipment checks for Level 3 gas-powered devices and Level 3 vacuum shall be performed following the installation of the interconnecting pipelines, accessories, and source equipment.

5.3.12.4.8.2 Use of Source Equipment for Pipeline Verification Tests. Where the source equipment and system gas or vacuum is used for final testing of the distribution piping, the source equipment shall be checked out and placed in operation prior to testing the distribution piping.

5.3.12.4.8.3 Level 3 Gas-Powered Devices Source Equipment. The source equipment for Level 3 gas-powered device system(s) shall be checked out and placed in operation according to the manufacturer's instructions.

5.3.12.4.8.4 Level 3 Vacuum Source Equipment. The source equipment for Level 3 vacuum systems shall be checked out and placed in operation according to the manufacturer's instructions.

5.3.13 Level 3 Operation and Management.

5.3.13.1 Special Precautions for Handling Oxygen Cylinders and Manifolds. Handling of oxygen cylinders and manifolds shall be based on CGA G-4, *Oxygen*.

5.3.13.1.1 Oxygen cylinders, containers, and associated equipment shall be protected from contact with oil or grease. Specific precautions shall include the following:

(1) Oil, grease, or readily flammable materials shall never be permitted to come in contact with oxygen cylinders, valves, regulators, gauges, or fittings.
(2) Regulators, fittings, or gauges shall never be lubricated with oil or any other flammable substance.
(3) Oxygen cylinders or apparatus shall never be handled with oily or greasy hands, gloves, or rags.

5.3.13.1.2 Equipment associated with oxygen shall be protected from contamination. Specific precautions shall include the following:

(1) Particles of dust and dirt shall be cleared from cylinder valve openings by slightly opening and closing the valve before applying any fitting to the cylinder.

Copyright National Fire Protection Association
Provided by IHS under license with NFPA
No reproduction or networking permitted without license from IHS
Not for Resale

(2) The high-pressure valve on the oxygen cylinder shall be opened before bringing the apparatus to the patient or the patient to the apparatus.
(3) An oxygen cylinder shall never be draped with any materials such as hospital gowns, masks, or caps.
(4) Cylinder-valve protection caps, where provided, shall be kept in place and be hand-tightened, except when cylinders are in use or connected for use.
(5) Valves shall be closed on all empty cylinders in storage.

5.3.13.1.3 Cylinders shall be protected from damage. Specific procedures shall include the following:

(1) Oxygen cylinders shall be protected from abnormal mechanical shock, which is liable to damage the cylinder, valve, or safety device.
(2) Oxygen cylinders shall not be stored near elevators, gangways, or in locations where heavy moving objects will strike them or fall on them.
(3) Cylinders shall be protected from the tampering of unauthorized individuals.
(4) Cylinders or cylinder valves shall not be repaired, painted, or altered.
(5) Safety relief devices in valves or cylinders shall never be tampered with.
(6) Valve outlets clogged with ice shall be thawed with warm — not boiling — water.
(7) A torch flame shall never be permitted under any circumstances to come in contact with cylinder valves or safety devices.
(8) Sparks and flame shall be kept away from cylinders.
(9) Even if they are considered to be empty, cylinders shall never be used as rollers, supports, or for any purpose other than that for which the supplier intended them.
(10) Large cylinders (exceeding size E) and containers larger than 45 kg (100 lb) weight shall be transported on a proper hand truck or cart complying with Chapter 9.
(11) Freestanding cylinders shall be properly chained or supported in a proper cylinder stand or cart.
(12) Cylinders shall not be supported by radiators, steam pipes, or heat ducts.

5.3.13.1.4 Cylinders and their contents shall be handled with care. Specific procedures shall include the following:

(1) Oxygen fittings, valves, regulators, or gauges shall never be used for any service other than that of oxygen.
(2) Gases of any type shall never be mixed in an oxygen cylinder or any other cylinder.
(3) Oxygen shall always be dispensed from a cylinder through a pressure regulator.
(4) The cylinder valve shall be opened slowly, with the face of the gauge on the regulator pointed away from all persons.
(5) Oxygen shall be referred to by its proper name, oxygen, not air, and liquid oxygen referred to by its proper name, not liquid air.
(6) Oxygen shall never be used as a substitute for compressed air.
(7) The markings stamped on cylinders shall not be tampered with because it is against federal statutes to change these markings without written authority from the Bureau of Explosives.
(8) Markings used for the identification of contents of cylinders shall not be defaced or removed, including decals, tags, stenciled marks, and the upper half of shipping tag.
(9) The owner of the cylinder shall be notified if any condition has occurred that might permit any foreign substance to enter a cylinder or valve, giving details and cylinder number.
(10) Neither cylinders nor containers shall be placed in proximity to radiators, steam pipes, heat ducts, or other sources of heat.
(11) Very cold cylinders or containers shall be handled with care to avoid injury.

5.3.13.1.5 Oxygen equipment that is defective shall not be used until one of the following has been performed:

(1) It has been repaired by competent in-house personnel.
(2) It has been repaired by the manufacturer or his or her authorized agent.
(3) It has been replaced.

5.3.13.1.6 Regulators that are in need of repair or cylinders having valves that do not operate properly shall never be used.

5.3.13.2 Special Precautions for Making Cylinder and Container Connections.

5.3.13.2.1 Wrenches and tools used to connect equipment shall be manufactured of material of adequate strength.

5.3.13.2.2 Cylinder valves shall be opened and connected in accordance with the following procedure:

(1) Make certain that apparatus and cylinder valve connections and cylinder wrenches are free of foreign materials.
(2) Turn the cylinder valve outlet away from personnel. Stand to the side — not in front and not in back. Before connecting the apparatus to cylinder valve, momentarily open cylinder valve to eliminate dust.
(3) Make connection of apparatus to cylinder valve. Tighten connection nut securely with a wrench.
(4) Release the low-pressure adjustment screw of the regulator completely.
(5) Slowly open cylinder valve to full open position.
(6) Slowly turn in the low-pressure adjustment screw on the regulator until the proper working pressure is obtained.
(7) Open the valve to the utilization apparatus.

5.3.13.2.3 Connections for containers shall be made in accordance with the container manufacturer's operating instructions.

5.3.13.3 Special Precautions for the Care of Safety Mechanisms.

5.3.13.3.1 Personnel using cylinders and containers and other equipment covered in this chapter shall be familiar with the Pin-Index Safety System *(see Chapter 9 of NFPA 99)* and the Diameter-Index Safety System *(see Chapter 9 of NFPA 99)*; both are designed to prevent utilization of the wrong gas.

5.3.13.3.2 Safety relief mechanisms, noninterchangeable connectors, and other safety features shall not be removed or altered.

5.3.13.4 Special Precautions — Storage of Cylinders and Containers.

5.3.13.4.1 Storage shall be planned so that cylinders can be used in the order in which they are received from the supplier.

5.3.13.4.2 If stored within the same enclosure, empty cylinders shall be segregated from full cylinders.

5.3.13.4.3 Empty cylinders shall be marked to avoid confusion and delay if a full cylinder is needed in a rapid manner.

--`,,`,,,`-`-`,,`,,`,`,,`---
Copyright National Fire Protection Association
Provided by IHS under license with NFPA
No reproduction or networking permitted without license from IHS
Not for Resale

5.3.13.4.4 Cylinders stored in the open shall be protected against the following conditions:

(1) Extremes of weather and from the ground beneath to prevent rusting
(2) Accumulations of ice or snow during winter
(3) Continuous exposure to direct rays of the sun in those localities where extreme temperatures prevail in summer

5.3.13.5 Special Precautions — Piped Patient Gas/Vacuum Systems.

5.3.13.5.1 Piping systems shall not be used for the distribution of flammable anesthetic gases.

5.3.13.5.2 Piping systems for gases shall not be used as a grounding electrode.

5.3.13.5.3 The vacuum system shall not be used for vacuum steam condensate return or other nonmedical applications.

5.3.13.5.4 Special Precautions.

5.3.13.5.4.1 Every facility shall establish a procedure for manually turning off the gas supply at the cylinder valves at the end of the work day, or when the facility is not in use.

5.3.13.5.4.2 No other method such as emergency shutoff valves or remote actuators (*see 5.3.4.1*) shall be used to turn off the gas supply.

5.3.13.6 Gas/Vacuum Systems Information and Warning Signs.

5.3.13.6.1 The gas content of medical gas piping systems shall be labeled according to 5.3.11.1.

5.3.13.7 Gas/Vacuum Systems Maintenance and Record Keeping.

5.3.13.7.1 Permanent records of all tests required by Section 5.3 shall be maintained in the organization's files.

5.3.13.7.2 A periodic testing procedure for nonflammable medical gas/vacuum and related alarm systems shall be implemented.

5.3.13.7.3 Whenever modifications are made or maintenance is performed that breaches the system, the tests specified in 5.3.12 shall be conducted on the downstream portions of the medical gas piping system.

5.3.13.7.4 A maintenance program shall be established for the following:

(1) Relief valves in accordance with applicable codes or manufacturer's recommendation
(2) The medical air compressor supply system in accordance with the manufacturer's recommendations
(3) The vacuum source and accessories in accordance with the manufacturer's recommendations
(4) Both the vacuum piping system and the secondary equipment attached to vacuum station inlets to ensure the continued good performance of the entire vacuum system
(5) The scavenger system to assure performance

5.3.13.7.5 Audible and visual alarm indicator(s) shall meet the following requirements:

(1) Be periodically tested to determine that they are functioning properly
(2) Have the records of the test maintained until the next test is performed

Chapter 6 Environmental Systems

6.1* Applicability. This chapter is applicable to health care facility laboratories and anesthetizing locations.

6.6.1 Anesthetizing Locations.

6.6.1.2 All gas storage locations or manifold enclosures shall be routinely inspected to ensure that the ventilation requirements stated in 5.1.3.3.3.1 are not obstructed.

Chapter 11 Laboratories

11.1* Applicability.

11.1.1* This chapter establishes criteria to minimize the hazards of fire and explosions in laboratories, as defined in Chapter 3. This section is not intended to cover hazards resulting from the misuse of chemicals, radioactive materials, or biological materials that will not result in fires or explosions.

11.1.2 Many of the requirements to protect against fire or explosion, such as those for hood exhaust systems, also serve to protect persons from exposure to nonfire health hazards of these materials.

11.1.3* NFPA 45, *Standard on Fire Protection for Laboratories Using Chemicals*, is the basic NFPA standard for laboratories that covers the construction, ventilation systems, and related fire protection of all laboratories in all facilities. However, this chapter (Chapter 11) has more stringent requirements for laboratories located in health care facilities. Where interface with existing NFPA or other consensus codes and standards occurs, reference is made to the appropriate source in the text.

11.1.4 Where necessary, due to the special nature of laboratories, codes and standards are supplemented in this text so as to apply more specifically to buildings or portions of buildings devoted to laboratory usage.

11.11 Piped Gas Systems.

11.11.2 Distribution.

11.11.2.1* Piping systems for fuel gases, such as manufactured gas, natural gas, and LP-Gas, shall comply with NFPA 54, *National Fuel Gas Code*, and NFPA 58, *Liquefied Petroleum Gas Code*.

11.11.2.3 Piping systems for nonflammable gases shall comply with Level 1 gas systems as specified in Chapter 5.

11.11.3 Piped Vacuum Systems. See 5.1.3.6.

11.11.3.1 Source. (Reserved)

11.11.3.2* Distribution. Where only one set of vacuum pumps is available for a combined medical–surgical vacuum system and an analysis, research, or teaching laboratory vacuum system, such laboratories shall be connected separate from the medical–surgical system directly to the receiver tank through its own isolation valve and fluid trap located at the receiver. Between the isolation valve and fluid trap, a scrubber shall be permitted to be installed.

11.11.4 Piped WAGD Systems. (Reserved)

11.11.5 Performance Criteria and Testing (Gas, Vacuum, WAGD).

11.11.5.1 Piped Gas Systems. Piped gas systems shall be tested in accordance with 5.1.12.

Copyright National Fire Protection Association
Provided by IHS under license with NFPA
No reproduction or networking permitted without license from IHS
Not for Resale

11.11.5.2 Piped Vacuum Systems. (Reserved)

11.11.5.3 WAGD Systems. (Reserved)

11.11.6 Administration. (Reserved)

Chapter 13 Hospital Requirements

13.1 Applicability. This chapter applies to hospitals as defined in Chapter 3. As used in this chapter, the term *hospital* (except where it obviously refers to the physical structure) shall mean the entity and that portion of its internal governing structure that has the responsibility for the elements of hospital operation covered by this chapter, including building design, purchasing specifications, inspection procedures, maintenance schedules, and training programs affecting such use.

13.3.5 Gas and Vacuum System Requirements.

13.3.5.1 General. Where medical gas, instrument air, vacuum, and WAGD systems are installed they shall conform to the requirements for the appropriate level. Systems conforming to different levels within the same building shall be permitted. The appropriate level shall be determined as follows:

(1) All systems shall comply to Level 1 if any part of the systems are Level 1, except where both of the following apply:
   (a) The system(s) is entirely separate from the Level 1 system(s) (i.e., is stand-alone) and is not connected to Level 1 sources or distribution pipelines.
   (b) The occupancy to be served and the function of that occupancy is distinct from other occupancies in the building.

(2) Medical gas and vacuum systems shall be permitted to be Level 2 systems only where the following apply:
   (a) Paragraphs 13.3.5.1(1)(a) and 13.3.5.1(1)(b) apply.
   (b) Patients served by the system(s) are not dependent on mechanical ventilation or assisted mechanical ventilation at any time, including during administration of anesthesia.

(3) Medical gas and vacuum systems shall be permitted to be Level 3 systems only where the following apply:
   (a) Paragraphs 13.3.5.1(1)(a) and 13.3.5.1(1)(b) and 13.3.5.1(2)(b) apply.
   (b) The patient population, during or subsequent to treatment, are not dependent for life on the gases or vacuum system(s), and the treatment(s) that the facility will perform can be completed without detrimental effect on patient outcomes in the event of sudden loss of the gas or vacuum system(s).
   (c)*The total of all gases in cylinders or containers, except nitrogen, connected and in storage at one time does not exceed 85 m^3 (3000 ft^3) at standard temperature and pressure (STP), except that 142 m^3 (5000 ft^3) (STP) shall be permitted if oxygen is stored in a DOT Specification 4L (cryogenic liquid) cylinder.
   (d) The system(s) supplies not more than two adjoining single treatment facilities.

13.3.5.2 Where nitrous oxide or halogenated agents are intended to be administered, a patient WAGD shall be installed and conform to Level 1 WAGD systems in Chapter 5.

13.3.11* Laboratories. Laboratories in hospitals shall comply with the requirements of Chapter 11 as applicable and the requirements of NFPA 45, *Standard on Fire Protection for Laboratories Using Chemicals*, as applicable.

13.4.1.2.7 Gases.

13.4.1.2.7.1 Storage Locations or Manifold Enclosures for Oxygen and Nitrous Oxide. The location and ventilation of storage rooms or manifold enclosures for oxygen and nitrous oxide shall comply with Chapters 5 and 6.

13.4.1.2.7.2 Nonflammable Medical Gas Piping Systems. Oxygen and nitrous oxide manifolds and piping systems that supply anesthetizing locations shall comply with Chapter 5.

Chapter 14 Other Health Care Facilities

14.1 Applicability. This chapter applies to other health care facilities not covered in Chapters 13 and 15 through 21.

14.3.5 Gas and Vacuum System Requirements.

14.3.5.1 General. Where medical gas, instrument air, vacuum, and WAGD systems are installed they shall conform to the requirements for the appropriate level. Systems conforming to different levels within the same building are permitted. The appropriate level shall be determined as follows:

(1) All systems shall comply with Level 1 requirements if any part of the systems are Level 1, except under both of the following conditions:
   (a) The system(s) is entirely separate from the Level 1 system(s) (i.e., is stand-alone) and is not connected to Level 1 sources or distribution pipelines.
   (b) The occupancy to be served and the function of that occupancy is distinct from other occupancies in the building.

(2) Medical gas and vacuum systems shall be permitted to be Level 2 systems only where both of the following conditions exist:
   (a) Paragraphs 14.3.5.1(1)(a) and 14.3.5.1(1)(b) apply.
   (b) Patients served by the system(s) are not dependent on mechanical ventilation or assisted mechanical ventilation at any time, including during administration of anesthesia.

(3) Medical gas and vacuum systems shall be permitted to be Level 3 systems only where both of the following conditions exist:
   (a) Paragraphs 14.3.5.1(1)(a) and 14.3.5.1(1)(b) and 14.3.5.1(2)(b) apply.
   (b) The patient population, during or subsequent to treatment, are not dependent for life on the gases or vacuum system(s), and the treatment(s) that the facility will perform can be completed without detrimental effect on patient outcomes in the event of sudden loss of the gas or vacuum system(s).
   (c)*The total of all gases in cylinders or containers, except nitrogen, connected and in storage at one time does not exceed 85 m^3 (3000 ft^3) STP, except that 142 m^3 (5000 ft^3) at STP shall be permitted if oxygen is stored in a DOT Specification 4L (cryogenic liquid) cylinder.
   (d) The system(s) supplies not more than two adjoining single treatment facilities.

14.3.5.2 Where nitrous oxide or halogenated agents are intended to be administered, a patient WAGD shall be installed and conform to Level 1 WAGD systems in Chapter 5.

Copyright National Fire Protection Association
Provided by IHS under license with NFPA
No reproduction or networking permitted without license from IHS
Not for Resale

14.3.11 Laboratories. Laboratories covered in this chapter shall comply with requirements in Chapter 11 as applicable and the requirements of NFPA 45, *Standard on Fire Protection for Laboratories Using Chemicals,* as applicable.

Chapter 15 Reserved

Chapter 16 Reserved

Chapter 17 Nursing Home Requirements

17.1 Applicability. This chapter applies to nursing homes, as defined in Chapter 3.

17.3.5 Gas and Vacuum System Requirements.

17.3.5.1 General. Where medical gas, instrument air, vacuum, and WAGD systems are installed, they shall conform to the requirements for the appropriate level. Systems conforming to different levels within the same building are permitted. The appropriate level shall be determined as follows:

(1) All systems shall comply with Level 1 requirements if any part of the systems are Level 1, except under both of the following conditions:
   (a) The system(s) is entirely separate from the Level 1 system(s) (i.e., is stand-alone) and is not connected to Level 1 sources or distribution pipelines.
   (b) The occupancy to be served and the function of that occupancy is distinct from other occupancies in the building.

(2) Medical gas and vacuum systems shall be permitted to be Level 2 systems only where both of the following conditions exist:
   (a) Paragraphs 17.3.5.1(1)(a) and 17.3.5.1(1)(b) apply.
   (b) Patients served by the system(s) are not dependent on mechanical ventilation or assisted mechanical ventilation at any time, including during administration of anesthesia.

(3) Medical gas and vacuum systems shall be permitted to be Level 3 systems only where both of the following conditions exist:
   (a) Paragraphs 17.3.5.1(1)(a) and 17.3.5.1(1)(b) and 17.3.5.1(2)(a) apply.
   (b) The patient population, during or subsequent to treatment, are not dependent for life on the gases or vacuum system(s), and the treatment(s) that the facility will perform can be completed without detrimental effect on patient outcomes in the event of sudden loss of the gas or vacuum system(s).
   (c)*The total of all gases in cylinders or containers, except nitrogen, connected and in storage at one time does not exceed 85 m^3 (3000 ft^3) at STP, except that 142 m^3 (5000 ft^3) at STP shall be permitted if oxygen is stored in a DOT Specification 4L (cryogenic liquid) cylinder.
   (d) The system(s) supplies not more than two adjoining single treatment facilities.

17.3.5.2 Reserved.

17.3.5.3 Reserved.

17.3.11* Laboratories. Laboratories in nursing homes shall comply with the requirements of Chapter 11, as applicable.

Chapter 18 Limited Care Facility Requirements

18.1 Applicability. This chapter applies to limited care facilities, as defined in Chapter 3.

18.3.5 Gas and Vacuum System Requirements.

18.3.5.1 General. Where medical gas, instrument air, vacuum, and WAGD systems are installed, they shall conform to the requirements for the appropriate level. Systems conforming to different levels within the same building are permitted. The appropriate level shall be determined as follows:

(1) All systems shall comply with Level 1 requirements if any part of the systems are Level 1, except under both of the following conditions:
   (a) The system(s) is entirely separate from the Level 1 system(s) (i.e., is stand-alone) and are not connected to Level 1 sources or distribution pipelines.
   (b) The occupancy to be served and the function of that occupancy is distinct from other occupancies in the building.

(2) Medical gas and vacuum systems shall be permitted to be Level 2 systems only where both of the following conditions exist:
   (a) Paragraphs 18.3.5.1(1)(a) and 18.3.5.1(1)(b) apply.
   (b) Patients served by the system(s) are not dependent on mechanical ventilation or assisted mechanical ventilation at any time, including during administration of anesthesia.

(3) Medical gas and vacuum systems shall be permitted to be Level 3 systems only where all of the following conditions exist:
   (a) Paragraphs 18.3.5.1(1)(a) and 18.3.5.1(1)(b) and 18.3.5.1(2)(b) apply.
   (b) The patient population, during or subsequent to treatment, are not dependent for life on the gases or vacuum system(s), and the treatment(s) that the facility will perform can be completed without detrimental effect on patient outcomes in the event of sudden loss of the gas or vacuum system(s)
   (c)*The total of all gases in cylinders or containers, except nitrogen, connected and in storage at one time does not exceed 85 m^3 (3000 ft^3) at STP, except that 142 m^3 (5000 ft^3) at STP shall be permitted if oxygen is stored in a DOT Specification 4L (cryogenic liquid) cylinder.
   (d) The system(s) supplies not more than two adjoining single treatment facilities

18.3.11* Laboratories. Laboratories in limited care facilities shall comply with the requirements of Chapter 11, as applicable.

Chapter 20 Hyperbaric Facilities

20.1 Applicability.

20.1.1 This chapter shall apply to new facilities.

20.1.2 This chapter shall also apply to the altered, renovated, or modernized portion of an existing system or individual component.

Copyright National Fire Protection Association
Provided by IHS under license with NFPA
No reproduction or networking permitted without license from IHS
Not for Resale

20.2.4.2 Sources of Air for Chamber Atmospheres.

20.2.4.2.6 Air compressor installations that supply medical air to piped gas systems as well as to hyperbaric facilities shall meet the requirements of 5.1.3.5.3 in Chapter 5 and the requirements of this chapter.

20.3.4 Maintenance.

20.3.4.1 General.

20.3.4.1.3 Before piping systems are initially put into use, it shall be ascertained that the gas delivered at the outlet is shown on the outlet label and that connecting fittings are checked against their labels, in accordance with Sections 5.1 through 5.3.

20.3.4.1.4 The requirements set forth in Section 5.1 concerning the storage, location, and special precautions required for compressed gases shall be followed. Reserve supplies and master alarm signals shall meet the requirements of Section 5.2.

Chapter 21 Freestanding Birthing Centers

21.1 Applicability. This chapter applies to freestanding birth centers, as defined in Chapter 3.

21.3.5 Gas and Vacuum System Requirements. Gas and vacuum systems used in freestanding birthing centers shall conform to such requirements of Chapter 5 as applicable.

Annex A Explanatory Material

Annex A is not a part of the requirements of this NFPA document but is included for informational purposes only. This annex contains explanatory material, numbered to correspond with the applicable text paragraphs.

A.1.1.11.1(3) Although this subsection deals primarily with hazards related to fires and explosions, many of the requirements to protect against fire or explosion, such as those for hood exhaust systems, also serve to protect persons from exposure to nonfire health hazards of these materials.

A.1.1.12 Because no single model of an emergency management plan is feasible for every health care facility, this chapter is intended to provide criteria in the preparation and implementation of an individual plan. The principles involved are universally applicable; the implementation needs to be tailored to the specific facility.

A.1.1.20 During the past 20 years there has been a widespread interest in the use of oxygen at elevated environmental pressure to increase the partial pressure of oxygen in a patient's tissues in order to treat certain medical conditions or to prepare a patient for surgery. These techniques are also employed widely for the treatment of decompression sickness (e.g., bends, caisson worker's disease) and carbon monoxide poisoning.

Recently, however, the level of knowledge and expertise has increased so dramatically that the codes are in need of updating. By the end of 1988, there were 218 hyperbaric facilities in operation in the U.S. and Canada. These facilities supported hyperbaric medical treatments for 62,548 patients between 1971 and 1987. As these facilities provide therapy for disorders indicated for treatment, these numbers will continue to increase. As the number of facilities increases, the number of patients treated will also increase.

Such treatment involves placement of the patient, with or without attendants, in a hyperbaric chamber or pressure vessel, the pressure of which is raised above ambient pressure. In the course of the treatment, the patient breathes up to 100 percent oxygen.

In addition to being used for patient care, these chambers also are being employed for research purposes using experimental animals and, in some instances, humans.

The partial pressure of oxygen present in a gaseous mixture is the determinate factor of the amount of available oxygen. This pressure will rise if the volume percentage of oxygen present increases, or if the total pressure of a given gas mixture containing oxygen increases, or if both factors increase. Because the sole purpose of the hyperbaric technique of treatment is to raise the total pressure within the treatment chamber, an increased partial pressure of oxygen always is available during treatment unless positive means are taken to limit the oxygen content. In addition, the patient is often given an oxygen-enriched atmosphere to breathe.

There is continual need for human diligence in the establishment, operation, and maintenance of hyperbaric facilities. It is the responsibility of the chief administrator of the facility possessing the hyperbaric chamber to adopt and enforce appropriate regulations for hyperbaric facilities. In formulating and administering the program, full use should be made of technical personnel highly qualified in hyperbaric chamber operations and safety.

It is essential that personnel having responsibility for the hyperbaric facility establish and enforce appropriate programs to fulfill the provisions of Chapter 20.

Potential hazards can be controlled only when continually recognized and understood by all pertinent personnel.

The purpose of this chapter is to set forth minimum safeguards for the protection of patients or other subjects of, and personnel administering, hyperbaric therapy and experimental procedures. Its purpose is also to offer some guidance for rescue personnel who are not ordinarily involved in hyperbaric chamber operation, but who could become so involved in an emergency.

Requirements cited in 1.1.20 are minimum ones. Discretion on the part of chamber operators and others might dictate the establishment of more stringent regulations.

A.1.5.1 Trade units vary from SI to U.S. customary units depending on the equipment devices or material.

A.3.2.1 Approved. The National Fire Protection Association does not approve, inspect, or certify any installations, procedures, equipment, or materials; nor does it approve or evaluate testing laboratories. In determining the acceptability of installations, procedures, equipment, or materials, the authority having jurisdiction may base acceptance on compliance with NFPA or other appropriate standards. In the absence of such standards, said authority may require evidence of proper installation, procedure, or use. The authority having jurisdiction may also refer to the listings or labeling practices of an organization that is concerned with product evaluations and is thus in a position to determine compliance with appropriate standards for the current production of listed items.

A.3.2.2 Authority Having Jurisdiction (AHJ). The phrase "authority having jurisdiction," or its acronym AHJ, is used in NFPA documents in a broad manner, since jurisdictions and approval agencies vary, as do their responsibilities. Where public safety is primary, the authority having jurisdiction may be a

--`,,`,,,-`-`,,`,,`,`,,`---

Copyright National Fire Protection Association
Provided by IHS under license with NFPA
No reproduction or networking permitted without license from IHS
Not for Resale

federal, state, local, or other regional department or individual such as a fire chief; fire marshal; chief of a fire prevention bureau, labor department, or health department; building official; electrical inspector; or others having statutory authority. For insurance purposes, an insurance inspection department, rating bureau, or other insurance company representative may be the authority having jurisdiction. In many circumstances, the property owner or his or her designated agent assumes the role of the authority having jurisdiction; at government installations, the commanding officer or departmental official may be the authority having jurisdiction.

A.3.2.3 Code. The decision to designate a standard as a "code" is based on such factors as the size and scope of the document, its intended use and form of adoption, and whether it contains substantial enforcement and administrative provisions.

A.3.2.6 Listed. The means for identifying listed equipment may vary for each organization concerned with product evaluation; some organizations do not recognize equipment as listed unless it is also labeled. The authority having jurisdiction should utilize the system employed by the listing organization to identify a listed product.

A.3.3.9 Anesthetizing Location. For guidance on flammable anesthetizing locations, see Annex E of NFPA 99.

A.3.3.12 Applicator. In the given sense, an applicator is not an electrode because it does not use a conductive connection to the patient in order to function. A radio frequency "horn" of a diathermy machine is a typical applicator.

A.3.3.14 Atmosphere. As employed in this standard, *atmosphere* can refer to the environment within or outside of a hyperbaric facility. When used as a measure of pressure, atmosphere is expressed as a fraction of standard air pressure [101.4 kPa (14.7 psi)]. *(See Column 1 of the Pressure Table in Annex D of NFPA 99B.)*

A.3.3.14.3 Atmosphere of Increased Burning Rate. The degree of fire hazard of an oxygen-enriched atmosphere varies with the concentration of oxygen and diluent gas and the total pressure. The definition contained in the current edition of NFPA 53, *Recommended Practice on Materials, Equipment, and Systems Used in Oxygen-Enriched Atmospheres* and in editions of NFPA 56D, *Standard for Hyperbaric Facilities*, prior to 1982, did not necessarily reflect the increased fire hazard of hyperbaric and hypobaric atmospheres.

The definition of atmosphere of increased burning rate used in Chapter 20 and in NFPA 99B, *Standard for Hypobaric Facilities*, defines an oxygen-enriched atmosphere with an increased fire hazard, as it relates to the increased burning rate of material in the atmosphere. It is based on a 1.2 cm/sec (0.47 in./sec) burning rate (at 23.5 percent oxygen at 1 atmosphere absolute) as described in Figure A.3.3.14.3.

This rate can be determined as follows:

$$\frac{23.45}{\sqrt{TP_{atmos}}}$$

where:
TP_{atmos} = total pressure in atmospheres

A.3.3.16 Bends. See C.20.1.3.4.2 of NFPA 99.

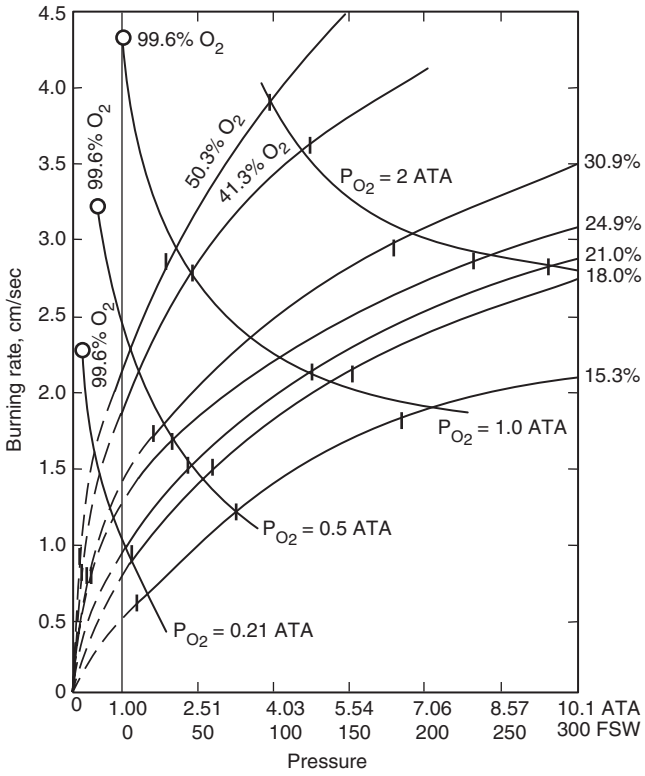

ATA = Atmospheres absolute
FSW = Feet of sea water

FIGURE A.3.3.14.3 Burning Rates of Filter Paper Strips at an Angle of 45 Degrees in N_2–O_2 Mixtures. (Adapted from Figure 4 of "Technical Memorandum UCRI-720, Chamber Fire Safety.")

A.3.3.19.2 Bulk Oxygen System. The oxygen containers can be stationary or movable, and the oxygen can be stored as gas or liquid. The bulk oxygen system terminates at the point where oxygen at service pressure first enters the supply line.

A.3.3.22 Combustible Liquid. See NFPA 30, *Flammable and Combustible Liquids Code*, for further information on flash point test procedures.

A.3.3.23 Combustion. Combustion is not limited to a chemical reaction always involving oxygen. Certain metals, such as calcium and aluminum, will burn in nitrogen; nitrous oxide will support the combustion of phosphorus and carbon; and so on. However, this document deals with the more common process of fuels burning in air.

A.3.3.33 Direct Electrical Pathway to the Heart. Electrodes, such as those used for pacing the heart, and catheters filled with conductive fluids, are examples of direct electrical pathways to the heart.

A.3.3.34 Disaster. A disaster can be either an event that causes or threatens to cause physical damage and injury to facility personnel or patients within the facility, or an event that requires expansion of facilities to receive and care for a large number of casualties resulting from a disaster that produces no damage or injury to the health care facility and staff, or a combination thereof.

Copyright National Fire Protection Association
Provided by IHS under license with NFPA
No reproduction or networking permitted without license from IHS
Not for Resale

Such a situation creates the need for emergency expansion of facilities, as well as operation of this expanded facility in an unfamiliar environment. Under this definition, the recognition of a disaster situation will vary greatly from one facility to another and from time to time in any given facility. Such recognition and concomitant activation of the Health Care Emergency Preparedness Plan is dependent on mutual aid agreements, facility type, geographic location, bed capacity, bed occupancy at a given time, staff size, staff experience with disaster situations, and other factors. For example, the routine workload of the emergency department of a large metropolitan general hospital would constitute a disaster, requiring activation of the Health Care Emergency Preparedness Plan, were this same workload to be suddenly applied to a small community hospital.

Disasters have a variety of causes, all of which should be considered for effective emergency preparedness planning. Among the most common are natural disasters such as earthquakes, hurricanes, tornadoes, and floods; mass food poisoning; industrial accidents involving explosion or environmental release of toxic chemicals; transportation accidents involving crashes of trains, planes, or automobiles with resulting mass casualties; civil disturbances; building fires; extensive or prolonged utility failure; collapse of buildings or other occupied structures; and toxic smogs in urban areas. Arson attempts and bomb threats have been made on health care facilities and should therefore be considered. Potential admission to the facility of high profile persons should be addressed. Although the last does not involve mass casualties or the potential of mass casualties, the degree of disruption of normal routine will be sufficient to qualify it as a disasterlike situation.

Disaster plans should reflect a facility's location from internal and external disasters. As an example, areas subject to frequent wildland fires should invoke countermeasures for smoke management and air quality maintenance.

A.3.3.36 Double-Insulated Appliances. Double-insulated appliances can be identified by a symbol consisting of a square within a square, or wording such as "double-insulated" marked on the appliance. Appliance packaging and documents may also provide identification. Although double-insulated appliances do not require a third wire or pin, some double-insulated appliances have a third conductor or pin solely for purposes of electro-magnetic compatibility (EMC).

A.3.3.38.3 Dispersive Electrode. This electrode is often called the grounding electrode, the "indifferent electrode," the "return electrode," the "patient ground plate," or the "neutral electrode."

A.3.3.47 Failure. Failure includes failure of a component, loss of normal protective paths such as grounding, and short circuits or faults between energized conductors and the chassis.

A.3.3.50 Flame Resistant. A source of ignition alternate to the gas burner specified in NFPA 701, *Standard Methods of Fire Tests for Flame Propagation of Textiles and Films*, could be required for this test if it is to be performed in 100 percent oxygen at several atmospheres pressure.

A.3.3.51 Flammable. Flammables may be solids, liquids, or gases exhibiting these qualities. Many substances nonflammable in air become flammable if the oxygen content of the gaseous medium is increased above 0.235 ATA.

A.3.3.54 Flash Point. See C.11.2.2 of NFPA 99.

A.3.3.58 Frequency. Formerly the unit of frequency was cycles per second, a terminology no longer preferred. The waveform can consist of components having many different frequencies, in which case it is called a complex or nonsinusoidal waveform.

A.3.3.59 Fume Hood. Laboratory fume hoods prevent toxic, flammable, or noxious vapors from entering the laboratory, present a physical barrier from chemical reactions, and serve to contain accidental spills.

This definition does not include canopy hoods or recirculation laminar-flow biological-safety cabinets that are not designed for use with flammable materials.

A.3.3.65 Grounding System. It coordinates with, but can be locally more extensive than, the grounding system described in Article 250 of NFPA 70, *National Electrical Code*.

A.3.3.67 Hazardous Chemical. For hazard ratings of many chemicals, see NFPA 49, *Hazardous Chemicals Data*, and NFPA 325, *Guide to Fire Hazard Properties of Flammable Liquids, Gases, and Volatile Solids*, both available in NFPA's *Fire Protection Guide to Hazardous Materials. (See also C.11.2.3 of NFPA 99).*

A.3.3.68 Health Care Facilities. Health care facilities include, but are not limited to, hospitals, nursing homes, limited care facilities, clinics, medical and dental offices, and ambulatory health care centers, whether permanent or movable.

A.3.3.78 Impedance. The circuit element can consist of any combination of resistance, capacitance, or inductance.

A.3.3.82 Intrinsically Safe. Abnormal conditions can include accidental damage to any part of the equipment or wiring, insulation or other failure of electrical components, application of overvoltage, adjustment and maintenance operations, and other similar conditions.

A.3.3.85 Isolated Power System. See NFPA 70, *National Electrical Code*.

A.3.3.87 Laboratory. These laboratories are not intended to include isolated frozen section laboratories; areas in which oxygen is administered; blood donor rooms in which flammable, combustible, or otherwise hazardous materials normally used in laboratory procedures are not present; and clinical service areas not using hazardous materials.

A.3.3.88 Laboratory Work Area. See NFPA 45, *Standard on Fire Protection for Laboratories Using Chemicals*.

A.3.3.93 Level 3 Compressed Air System. The system does not produce air to meet the medical requirements of medical air and is not intended to be used for air life support devices.

A.3.3.95 Level 3 Piped Vacuum System. The system is not intended for Level 1 vacuum applications. A wet piping system is designed to accommodate liquid, air–gas, and solids through the service inlet. A dry piping system is designed to accommodate air–gas only through the service inlet. [Liquid(s) and solid(s) are trapped before entering the service inlet.]

A.3.3.98 Limited-Combustible Material. Materials subject to increase in combustibility or flame-spread rating beyond the limits herein established through the effects of age, moisture, or other atmospheric condition are considered combustible.

See NFPA 259, *Standard Test Method for Potential Heat of Building Materials*.

A.3.3.100 Liquid. When not otherwise identified, the term *liquid* includes both flammable and combustible liquids. *(See also C.11.2.1 of NFPA 99.)*

Copyright National Fire Protection Association
Provided by IHS under license with NFPA
No reproduction or networking permitted without license from IHS
Not for Resale

A.3.3.101 Local Signal. Examples would include a light to indicate a compressor is operating or a cylinder header is in use or a flag attached to a manual changeover valve to indicate which side is in use.

A.3.3.104 Manufactured Assembly. Examples are headwalls, columns, ceiling columns, ceiling hung pendants, movable track systems, and so on.

A.3.3.106 Medical Air. Air supplied from on-site compressor and associated air treatment systems (as opposed to medical air USP supplied in cylinders) that complies with the specified limits is considered medical air. Hydrocarbon carryover from the compressor into the pipeline distribution system could be detrimental to the safety of the end user and to the integrity of the piping system. Mixing of air and oxygen is a common clinical practice, and the hazards of fire are increased if the air is thus contaminated. Compliance with these limits is thus considered important to fire and patient safety. The quality of local ambient air should be determined prior to its selection for compressors and air treatment equipment.

A.3.3.108 Medical/Dental Office. Examples include dental office/clinic, medical office/clinic, immediate care facility, and podiatry office.

A.3.3.121 Nitrogen Narcosis. See C.20.1.3.2.2 of NFPA 99.

A.3.3.125 Noncombustible Material. Materials reported as noncombustible, when tested in accordance with ASTM E 136, *Standard Test Method for Behavior of Materials in a Vertical Tube Furnace at 750°C*, are considered noncombustible materials.

A.3.3.127 Nonflammable Anesthetic Agent. It is possible to halogenate a compound and render it partially or totally nonflammable by the substitution of one or more halogens (e.g., fluorine, chlorine, bromine) for hydrogen. Thus halothane ($CF_3CHClBr$) is almost completely halogenated and is nonflammable. Methoxyflurane ($CHF_2CCl_2OCH_3$) is partially halogenated and is nonflammable in conditions encountered during clinical anesthesia (if it is heated, its vapor concentration will increase enough to burn). Fluroxene ($CF_3CH_2OCHCH_2$) is halogenated even less; it is flammable in concentrations of 4 percent or greater.

The following agents are considered flammable during conditions of clinical use in anesthesia:

(1) Cyclopropane
(2) Divinyl ether
(3) Ethyl chloride
(4) Ethylene
(5) Ethyl ether

The following agent is flammable during use in clinical anesthesia in higher concentrations: Fluroxene. Because fluroxene is flammable under certain conditions of use, it is listed as a flammable agent. Concentrations required for induction of anesthesia generally exceed 4 percent and are flammable. Maintenance of fluroxene anesthesia can be accomplished with concentrations of less than 4 percent, however.

The following agents are nonflammable during conditions of use in clinical anesthesia:

(1) Chloroform
(2) Halothane
(3) Methoxyflurane
(4) Nitrous oxide
(5) Trichloroethylene
(6) Enflurane

A.3.3.128 Nonflammable Medical Gas System. See Chapter 5, Gas and Vacuum Systems.

A.3.3.130 Oxidizing Gas. Oxygen and nitrous oxide are examples of oxidizing gases. There are many others, including halogens.

A.3.3.131 Oxygen. Its outstanding property is its ability to sustain life and to support combustion. Although oxygen is nonflammable, materials that burn in air will burn much more vigorously and create higher temperatures in oxygen or in oxygen-enriched atmospheres.

A.3.3.131.2 Liquid Oxygen. If spilled, the liquid can cause frostbite on contact with skin.

A.3.3.132 Oxygen Delivery Equipment. If an enclosure such as a mask, hood, incubator, canopy, or tent is used to contain the oxygen-enriched atmosphere, then that enclosure is considered to be oxygen delivery equipment.

A.3.3.136 Oxygen Toxicity (Hyperbaric). Under the pressures and times of exposure normally encountered in hyperbaric treatments, toxicity is a direct function of concentration and time of exposure. *(See also C.20.1.3.2.3 of NFPA 99.)*

A.3.3.138 Patient Care Area. Business offices, corridors, lounges, day rooms, dining rooms, or similar areas typically are not classified as patient care areas.

A.3.3.138.1 Critical Care Areas. For the purpose of this standard, the use of intravenous needles or catheters used to administer fluids and/or medications, endoscopes, colonscopes, sigmoidscopes, and urinary catheters are not considered invasive.

A.3.3.138.2 General Care Areas. In such areas, patients could be connected to patient-care–related electrical appliances (such as heating pads, electrocardiographs, drainage pumps, monitors, otoscopes, ophthalmoscopes, intravenous lines, etc.).

A.3.3.142 Patient Lead. This can be a surface contact (e.g., an ECG electrode); an invasive connection (e.g., implanted wire or catheter); or an incidental long-term connection (e.g., conductive tubing).

It is not intended to include adventitious or casual contacts such as a push button, bed surface, lamp, hand-held appliance, and so forth.

Also see 3.3.84, Isolated Patient Lead.

A.3.3.148.5 Partial Pressure. The pressure contributed by other gases in the mixture is ignored. For example, oxygen is one of the constituents of air; the partial pressure of oxygen in standard air, at a standard air pressure of 14.7 psia, is 3.06 psia or 0.208 ATA or 158 mm Hg.

A.3.3.148.7 Working Pressure. A pipeline working pressure of 2.9 to 3.2 kg/cm^2 (50 to 55 psig) is conventional because medical gas equipment is generally designed and calibrated for use at this pressure.

A.3.3.149 Pressure-Reducing Regulator. In hospitals, the term *regulator* is frequently used to describe a regulator that incorporates a flow-measuring device.

A.3.3.152 psig. Under standard conditions, 0 psig is equivalent to 14.7 psia.

A.3.3.155 Reactive Material. See Table C.11.2.3.3 of NFPA 99 for definitions of Reactivity 3 and Reactivity 4.

Copyright National Fire Protection Association
Provided by IHS under license with NFPA
No reproduction or networking permitted without license from IHS
Not for Resale

A.3.3.157 Refrigerating Equipment. It includes refrigerators, freezers, and similar equipment.

A.3.3.159 Remote. A gas storage supply system can be remote from the single treatment facility, but all use points must be contiguous within the facility.

A.3.3.169 Single Treatment Facility. The definition of single treatment facility was established to take into consideration principally single-level installations or those of a practice that could be two-level, but are reached by open stairs within the confines of the single treatment facility. See Figure A.3.3.169.

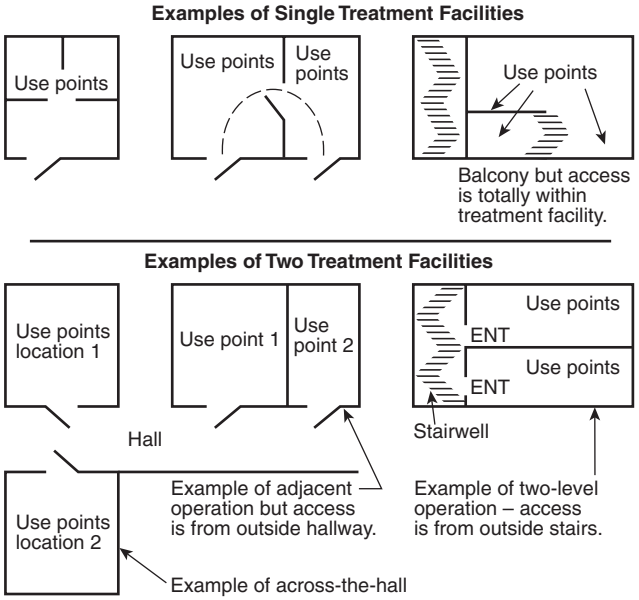

FIGURE A.3.3.169 Examples of Treatment Facilities.

A.3.3.170 Site of Intentional Expulsion. This definition addresses the site of intended expulsion. Actual expulsion can occur at other sites remote from the intended site due to disconnections, leaks, or rupture of gas conduits and connections. Vigilance on the part of the patient care team is essential to ensure system integrity.

For example, for a patient receiving oxygen via a nasal cannula or face mask, the site of expulsion normally surrounds the mask or cannula; for a patient receiving oxygen while enclosed in a canopy or incubator, the site of intentional expulsion normally surrounds the openings to the canopy or incubator; for a patient receiving oxygen while on a ventilator, the site of intentional expulsion normally surrounds the venting port on the ventilator.

A.3.3.175 Surface-Mounted Medical Gas Rail Systems. It is the intent that surface-mounted medical gas rail systems would be permitted in individual patient rooms but would not be allowed to go directly through room walls to adjacent patient rooms. However, it is the intent to allow surface-mounted medical gas rails to be used in a given critical care area where there can be a partition separating certain patient care functions, essentially leaving the system within the given critical care area. As an example, two adjacent patient rooms outside of a critical care unit would not be permitted to have a surface-mounted medical gas rail interconnect between the two rooms through the wall. However, in a nursery where there might be one or two segregated areas for isolation, a medical gas rail system supplying more than one isolation room, but within the nursery area, would be permitted to be interconnected with the nursery system.

A.3.3.178.1 Endotracheal Tube. An endotracheal tube can be equipped with an inflatable cuff.

A.3.3.178.2 Tracheotomy Tube. A tracheotomy tube can be equipped with an inflatable cuff.

A.3.3.179 Unattended Laboratory Operation. Absence for even short periods without coverage by a knowledgeable person constitutes an unattended laboratory operation.

A.3.3.181 Utility Center (J box). A utility center typically includes electrical receptacle(s), compressed air, nitrogen, vacuum, and water.

A.3.3.183 WAGD Interface. Interfaces are provided with overpressure, underpressure, overflow, and underflow compensation to ensure the breathing circuit is isolated from the WAGD system.

A.3.3.185 Wet Locations. Routine housekeeping procedures and incidental spillage of liquids do not define a wet location.

A.5.1.1 Section 5.1 covers requirements for Level 1 piped gas and vacuum systems; Section 5.2 covers Level 2 piped gas and vacuum systems; Section 5.3 covers Level 3 piped gas and vacuum systems. Laboratory systems are no longer covered by Chapter 5 (2002 edition).

A.5.1.1.2 These requirements do not restrict the distribution of other inert gases through piping systems.

A.5.1.3 See Figure A.5.1.3. Level 1 source drawings in this annex are representational, demonstrating a possible arrangement of components required by the text. The diagrams are not intended to imply method, materials of construction, or more than one of many possible and equally compliant arrangements. Alternative arrangements are permitted if they meet the intent of the text. Listed paragraphs may not be the only paragraphs that apply.

A.5.1.3.1.1 Regulations of the U.S. Department of Transportation (formerly U.S. Interstate Commerce Commission) outline specifications for transportation of explosives and dangerous articles (49 CFR 171–190). In Canada, the regulations of the Canadian Transport Commission, Union Station, Ottawa, Ontario, apply.

A.5.1.3.3 The bulk supply system should be installed on a site that has been prepared to meet the requirements of NFPA 50, *Standard for Bulk Oxygen Systems at Consumer Sites*, or CGA G-8.1, *Standard for Nitrous Oxide Systems at Consumer Sites*. Storage unit(s), reserve, pressure regulation, and signal actuating switch(es) are components of the supply system. Shutoff valves, piping from the site, and electric wiring from a signal switch(es) to the master signal panels are components of the piping system.

The bulk supply system is normally installed on the site by the owner of this equipment. It is the responsibility of the owner or the organization responsible for the operation and maintenance of the bulk supply system to ensure that all components of the supply system — main supply, reserve supply, supply system signal actuating switch(es), and delivery pressure regulation equipment — function properly before the system is put in service.

Copyright National Fire Protection Association
Provided by IHS under license with NFPA
No reproduction or networking permitted without license from IHS
Not for Resale

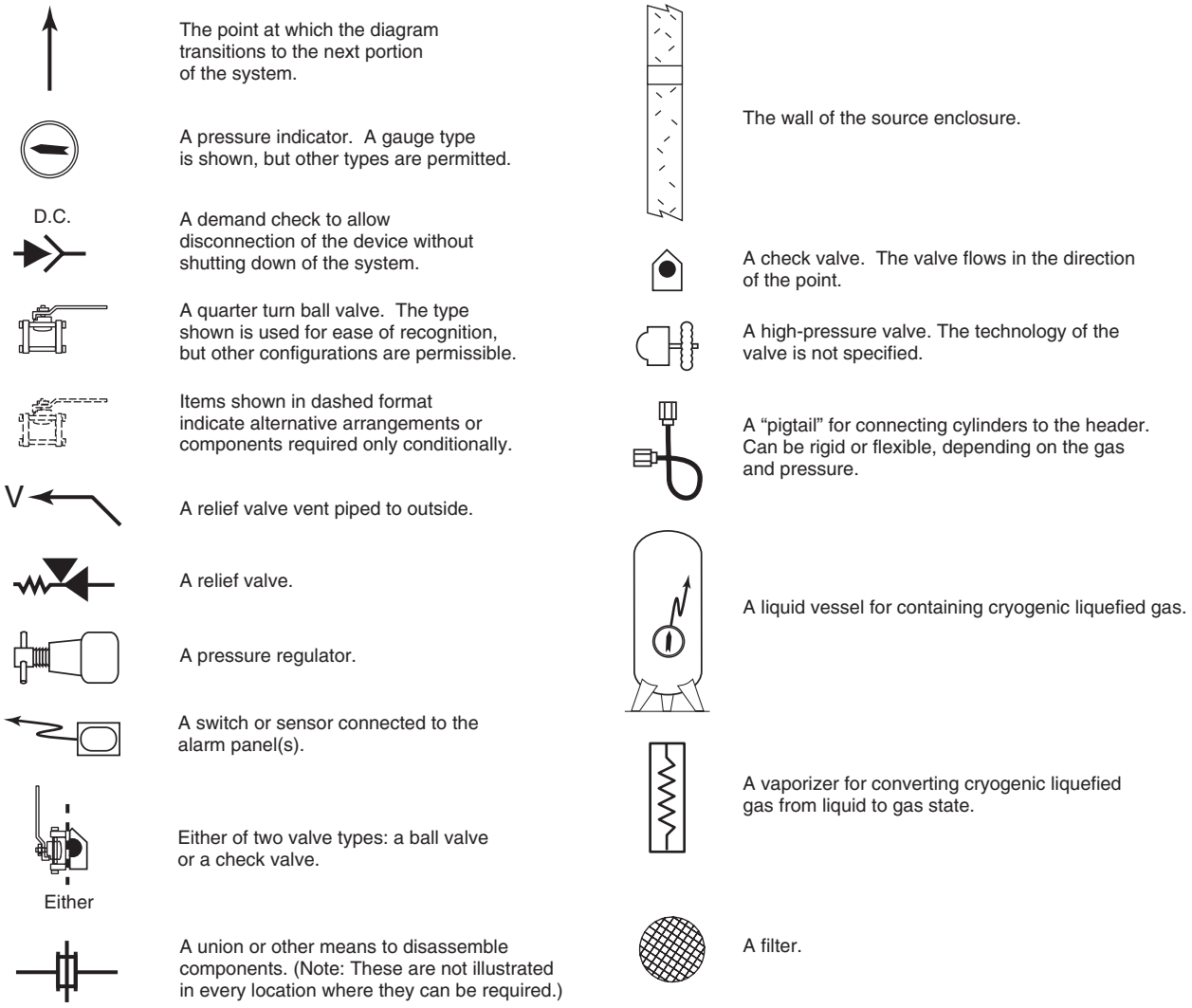

FIGURE A.5.1.3 Legend for Typical Level 1 Source Drawings.

A.5.1.3.3.2 Electric wiring and equipment in storage rooms for oxygen and nitrous oxide are not required to be explosionproof.

A.5.1.3.4 See Figure A.5.1.3.4. A four-valve bypass arrangement is illustrated. Three-way valves are permitted in lieu of the four valves shown.

A.5.1.3.4.2 Prohibited uses of medical gases include fueling torches, blowing down or drying any equipment such as lab equipment, endoscopy or other scopes, or any other purposes. Also prohibited is using the oxygen or medical air to raise, lower, or otherwise operate booms or other devices in operating rooms (ORs) or other areas.

A.5.1.3.4.4 Components include but are not limited to containers, valves, valve seats, lubricants, fittings, gaskets, and interconnecting equipment including hose. Easily ignitable materials should be avoided.

Compatibility involves both combustibility and ease of ignition. Materials that burn in air will burn violently in pure oxygen at normal pressure and explosively in pressurized oxygen. Also, many materials that do not burn in air will do so in pure oxygen, particularly under pressure. Metals for containers and piping have to be carefully selected, depending on service conditions. The various steels are acceptable for many applications, but some service conditions can call for other materials (usually copper or its alloys) because of their greater resistance to ignition and lower rate of combustion.

Similarly, materials that can be ignited in air have lower ignition energies in oxygen. Many such materials can be ignited by friction at a valve seat or stem packing or by adiabatic compression produced when oxygen at high pressure is rapidly introduced into a system initially at low pressure.

A.5.1.3.4.9 See Figure A.5.1.3.4.9(a) and Figure A.5.1.3.4.9(b). Connection to the gas outlet connection is illustrated. If the liquid outlet connection were used, an external vaporizer could be required.

A.5.1.3.4.9(1) The appropriate number of cylinders should be determined after consideration of delivery schedules, proximity of the facility to alternate supplies, and the emergency plan.

Copyright National Fire Protection Association
Provided by IHS under license with NFPA
No reproduction or networking permitted without license from IHS
Not for Resale

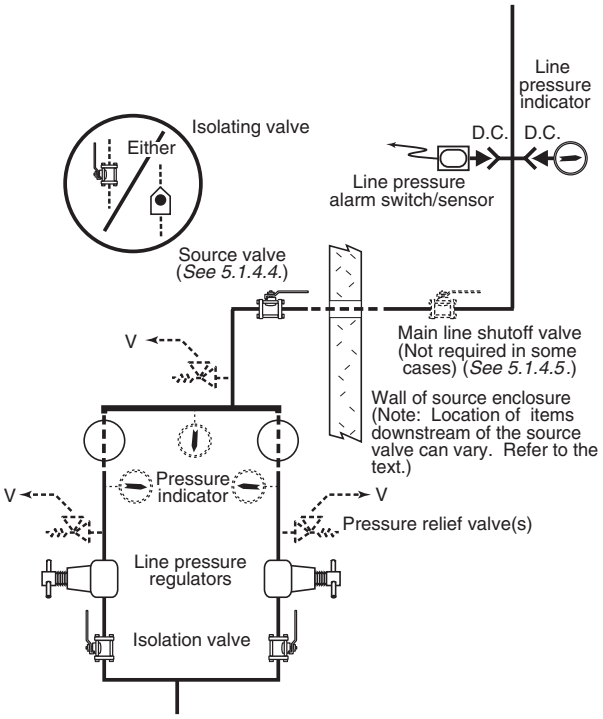

FIGURE A.5.1.3.4 Typical Arrangement for Line Controls at Pressure Sources.

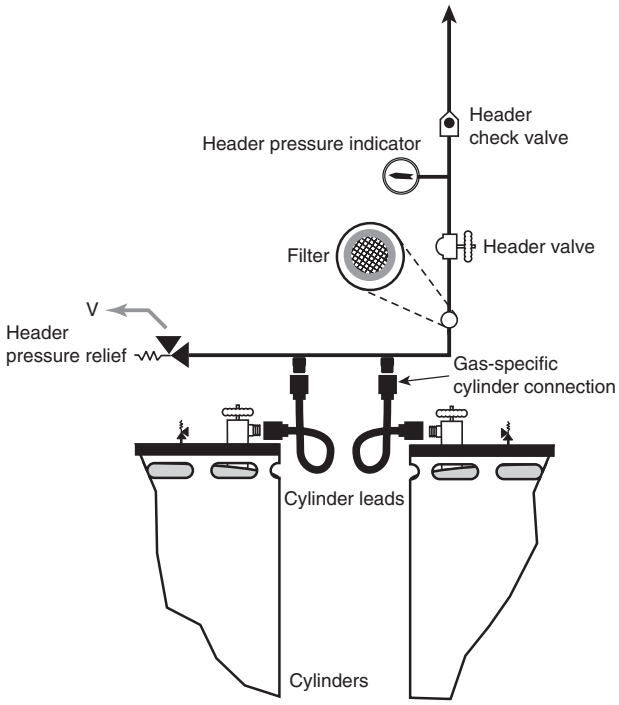

FIGURE A.5.1.3.4.9(b) Header for Cryogenic Gas in Containers.

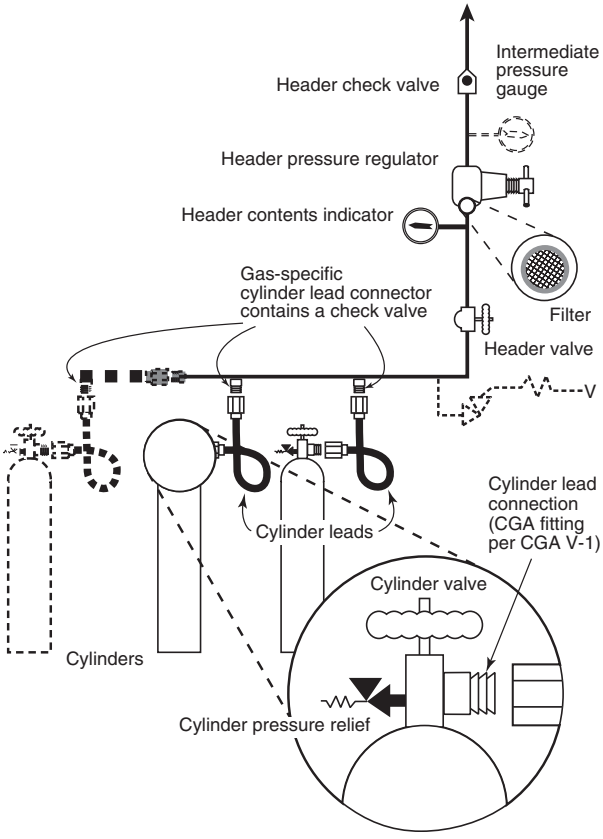

FIGURE A.5.1.3.4.9(a) Header for Gas in Cylinders.

A.5.1.3.4.10 See Figure A.5.1.3.4.10.

A.5.1.3.4.12 See Figure A.5.1.3.4.12.

A.5.1.3.4.13 For bulk oxygen systems, see NFPA 50, *Standard for Bulk Oxygen Systems at Consumer Sites*. See Figure A.5.1.3.4.13. Two possible choices of reserves are illustrated. Both are not required.

A.5.1.3.4.14 See Figure A.5.1.3.4.14.

If the relief valve on the emergency oxygen connection is moved to downstream from the check valve in the emergency oxygen line, connect it to the system with a demand check fitting.

A.5.1.3.5 Air supplied from on-site compressor and associated air treatment systems (as opposed to medical air USP supplied in cylinders) that complies with the specified limits is considered medical air. Hydrocarbon carryover from the compressor into the pipeline distribution system could be detrimental to the safety of the end user and to the integrity of the piping system. Mixing of air and oxygen is a common clinical practice, and the hazards of fire are increased if the air is contaminated. Compliance with these limits is thus considered important to fire and patient safety. The quality of local ambient air should be determined prior to its selection for compressors and air treatment equipment. See Figure A.5.1.3.5.

A.5.1.3.5.1 Supply systems for medical air using compressors draw air of the best available quality from a source of clean local ambient air; add no contaminants in the form of particulate matter, odor, or other gases; dry, filter, regulate, and supply that air only via the medical air piping distribution system for use exclusively in the application of human respiration.

Copyright National Fire Protection Association
Provided by IHS under license with NFPA
No reproduction or networking permitted without license from IHS
Not for Resale

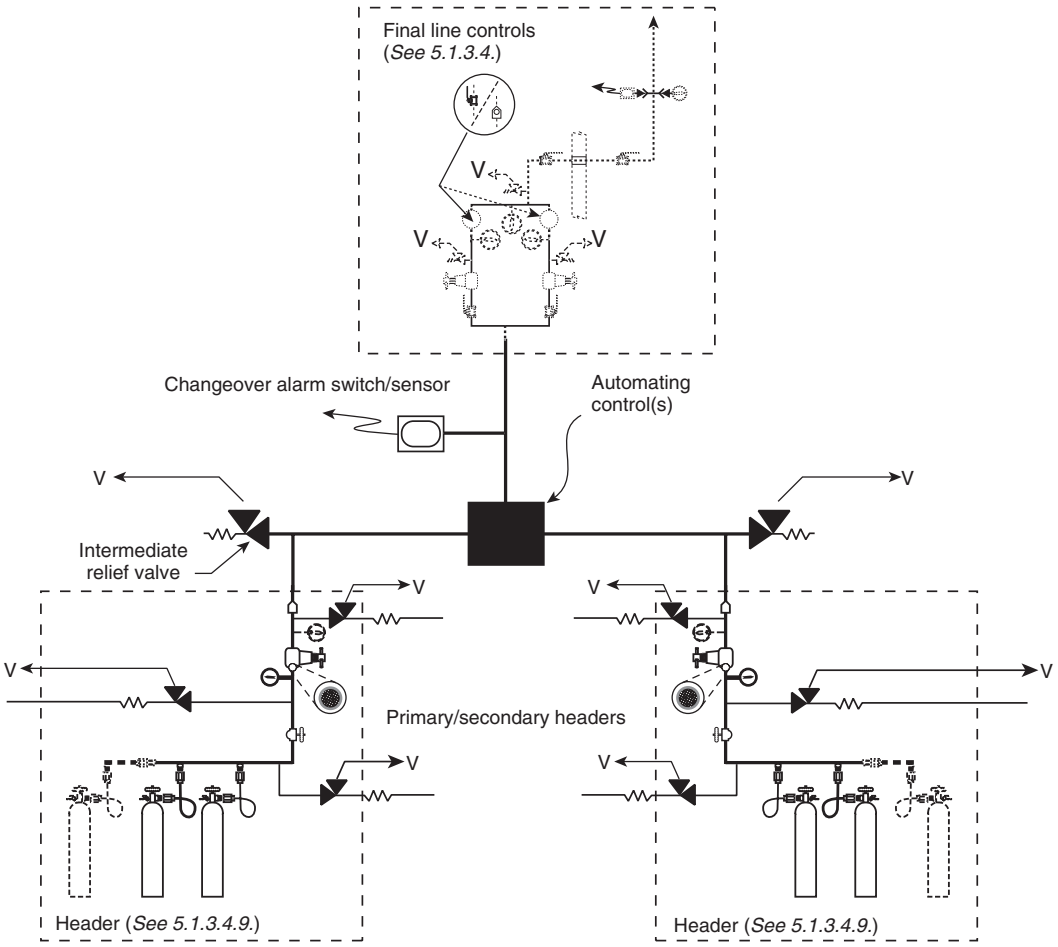

FIGURE A.5.1.3.4.10 Manifold for Gas Cylinders.

The utilization of an air treatment system is the joint responsibility of the system designer, hospital clinical and engineering staffs, and the authority having jurisdiction. Different types of compressors have characteristics that affect the selection of the type of air treatment system. Some air treatment systems impose an additional load upon the compressors that has to be accounted for in the sizing of the system (usable capacity). The compressor duty cycle has to be chosen in accordance with the manufacturer's recommendation.

The type of air compressor and air condition at the intake will govern the type of filter provided for the air compressor supply system. All filters should be examined quarterly for the presence of liquids or excessive particulates and replaced according to the manufacturer's instructions.

One procedure for reaching a decision on the quality of the medical air is the following:

(1) Test at the intake and at the sample connection valve.
(2) If the two purities agree within the limits of accuracy of the test, the compressor system can be accepted.
(3) If the air is found to exceed the values for medical compressed air as defined in 5.1.3.5.1, the facility can elect to install purification apparatus for the contaminants in question.

A.5.1.3.5.2 It is the intent that the medical air piping distribution system support only the intended need for breathable air for such items as intermittent positive pressure breathing (IPPB) and long-term respiratory assistance needs, anesthesia machines, and so forth. The system is not intended to be used to provide engineering, maintenance, and equipment needs for general hospital support use. It is the intent that the life safety nature of the medical air be protected by a system dedicated solely for its specific use.

As a compressed air supply source, a medical air compressor should not be used to supply air for other purposes because such use could increase service interruptions, reduce service life, and introduce additional opportunities for contamination.

A.5.1.3.5.3 See Figure A.5.1.3.5.

Copyright National Fire Protection Association
Provided by IHS under license with NFPA
No reproduction or networking permitted without license from IHS
Not for Resale

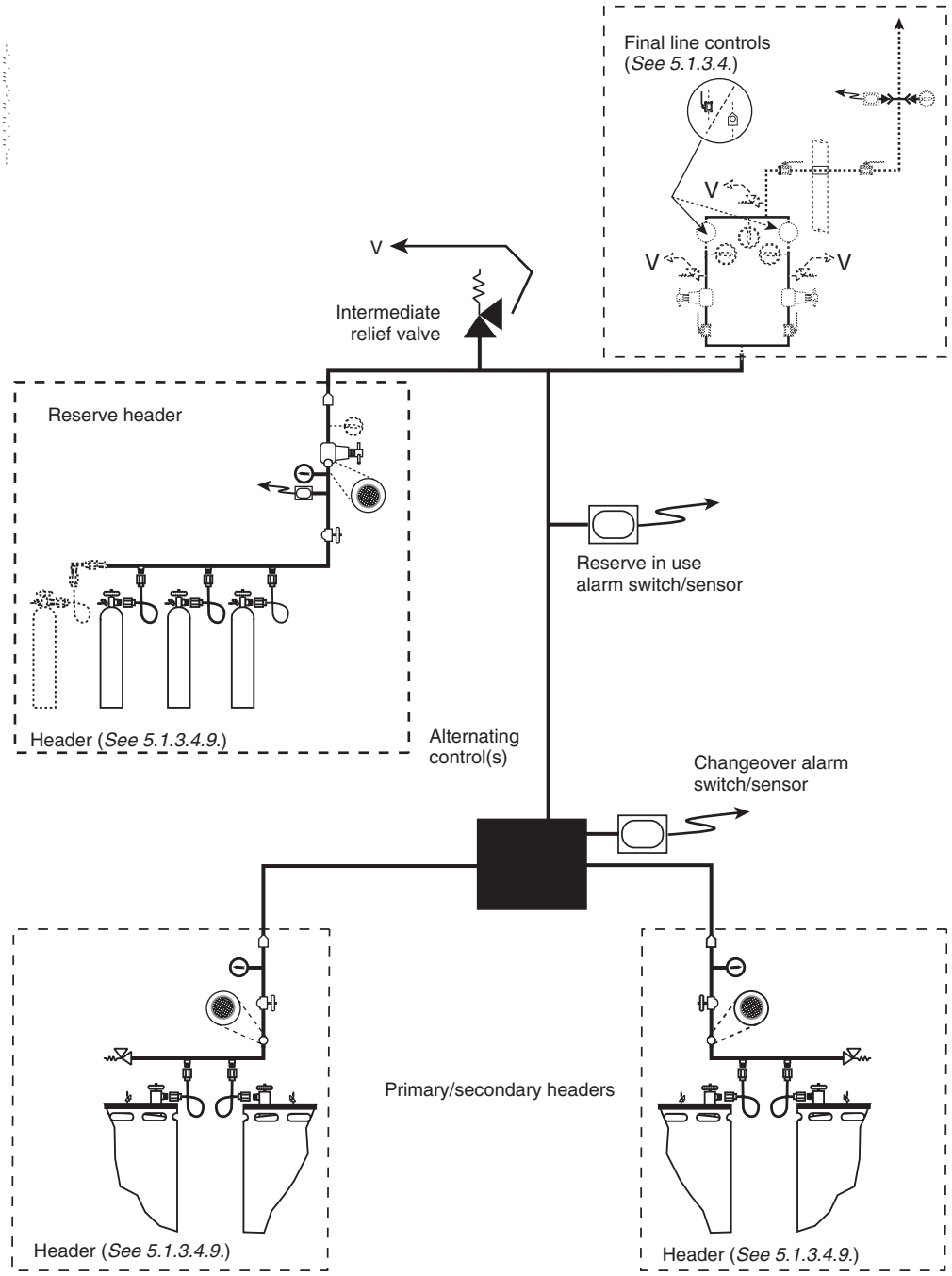

FIGURE A.5.1.3.4.12 Typical Source of Supply for Cryogenic Gas in Containers.

Copyright National Fire Protection Association
Provided by IHS under license with NFPA
No reproduction or networking permitted without license from IHS
Not for Resale

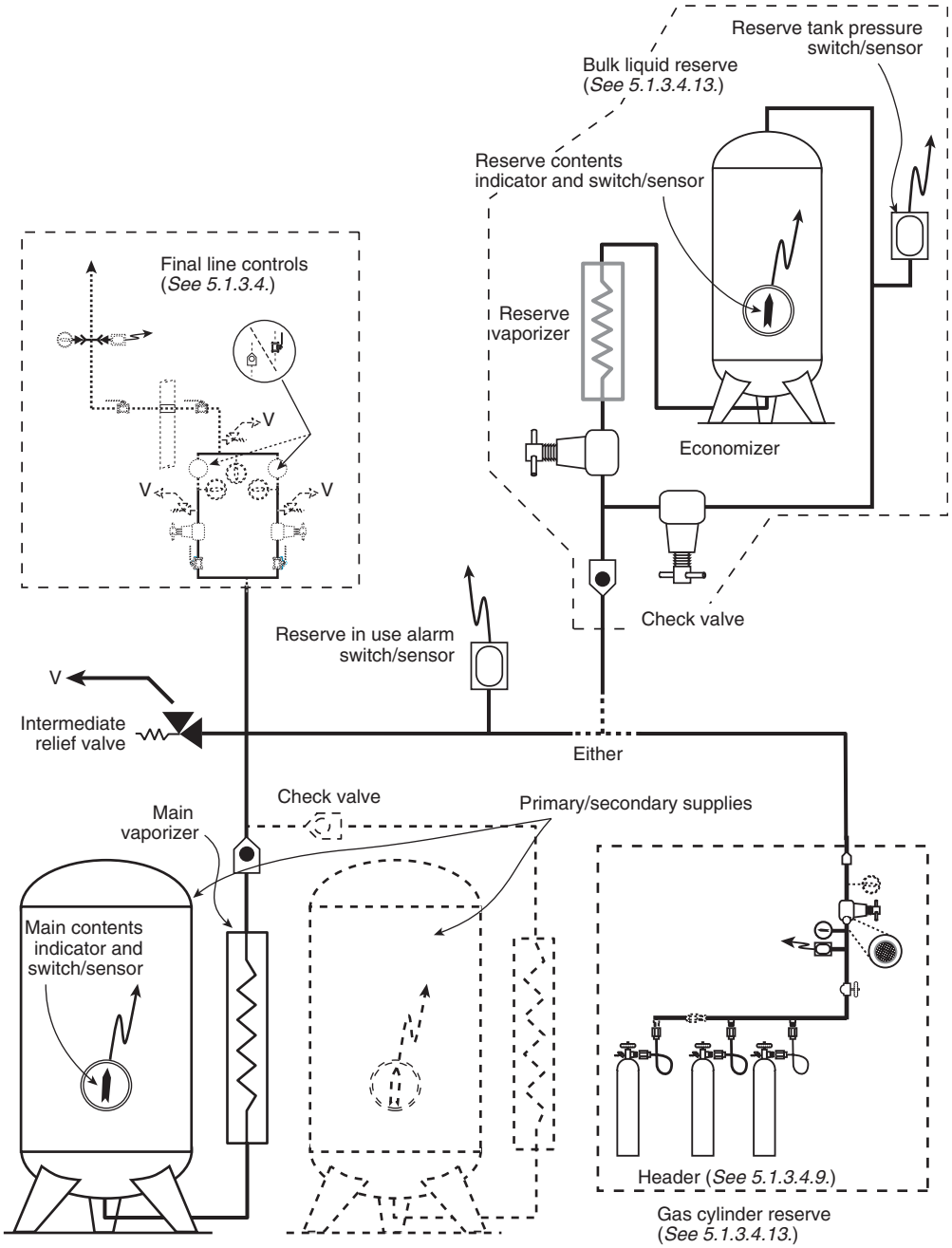

FIGURE A.5.1.3.4.13 Typical Source of Supply for Cryogenic Gas in Bulk.

Copyright National Fire Protection Association
Provided by IHS under license with NFPA
No reproduction or networking permitted without license from IHS
Not for Resale

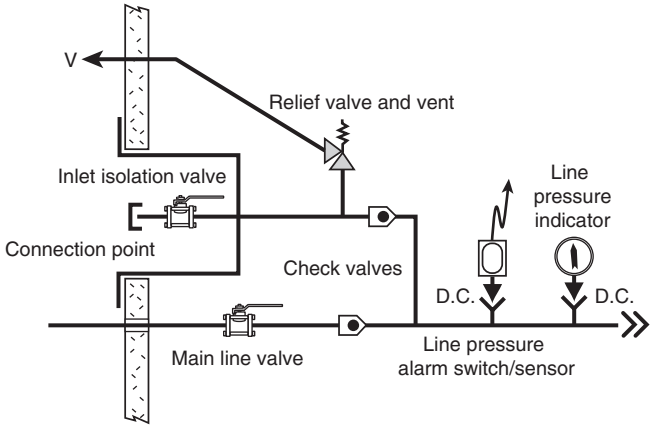

FIGURE A.5.1.3.4.14 Emergency Oxygen Supply Connection.

A.5.1.3.5.4.1 Examples of 5.1.3.5.4.1(1) are liquid ring and permanently sealed bearing compressors.

An example of 5.1.3.5.4.1(2) is an extended head reciprocating compressor with an atmospheric vent between the compression chamber and the crankcase.

An example of 5.1.3.5.4.1(3) is a rotating element compressor with the compression chamber being nonlubricated and separated from the lubricated gears by at least one shaft seal with an atmospheric vent on both sides. The vent on the lubricated side is provided with a gravity drain to atmosphere.

A.5.1.3.5.10 Other functions can be added at the request of the facility, such as low water pressure, and so forth.

A.5.1.3.5.11.4 A typical example of valving the receiver is shown in Figure A.5.1.3.5.11.4.

A.5.1.3.5.11.6 The two configurations are equally acceptable. The components can be arranged in either of the arrangements shown in Figure A.5.1.3.5.11.6.

A.5.1.3.6 See Figure A.5.1.3.6.

A.5.1.3.7 A functioning WAGD system will permit the facility to comply with occupational safety requirements by preventing the accumulation of waste anesthetic gases in the work environment.

WAGD using an HVAC (i.e., heating, ventilation, and air conditioning) system are not within the scope of Chapter 5.

Flammable and nonflammable gases are known to be incompatible with some seals and piping used in medical–surgical vacuum systems. If waste anesthetic gas disposal is to be included as part of the medical–surgical vacuum system, it should be recognized that this activity might cause deterioration of the vacuum system. The station inlet performance tests outlined in 5.1.12.3.10 are extremely important in maintaining the integrity of the medical–surgical vacuum system, and they should be made at more frequent intervals if waste anesthetic gas disposal is included in the vacuum system.

A.5.1.3.7.1 Interfaces are provided with overpressure, underpressure, overflow, and underflow compensation to ensure the breathing circuit is isolated from the WAGD system.

A.5.1.3.8 See Figure A.5.1.3.8.

A.5.1.3.8.5 Drawing intake air from outside in compliance with 5.1.3.5.13 is recommended.

A.5.1.4 See Figure A.5.1.4.

Area alarms are required in critical care locations (examples include intensive care units, coronary care units, angiography laboratories, cardiac catherization laboratories, postanesthesia recovery rooms, and emergency rooms) and anesthetizing locations (examples include operating rooms and delivery rooms). Refer to definitions for these areas.

A.5.1.4.5 The presence of a main line shutoff valve is optional where the source valve can equally or more effectively perform the same function. An example is a case where the source is within the building or just on the outside of the building and therefore there would be no great distance separating the two valves. A source that was physically separate from the building would require both valves to assure the intervening piping could be controlled.

A.5.1.5 Station outlets/inlets should be located at an appropriate height above the floor to prevent physical damage to equipment attached to the outlet.

A.5.1.6 Manufactured assembly examples include headwalls, columns, ceiling columns, ceiling hung pendants, movable track systems, and so forth. See Figure A.5.1.6.

A.5.1.7 It is the intent that surface-mounted medical gas rail systems would be permitted in individual patient rooms but would not be allowed to go directly through room walls to adjacent patient rooms. However, it is the intent to allow surface-mounted medical gas rails to be used in a given critical care area where there can be a partition separating certain patient care functions, essentially leaving the system within the given critical care area. As an example, two adjacent patient rooms outside of a critical care unit would not be permitted to have a surface-mounted medical gas rail interconnect between the two rooms through the wall. However, in a nursery where there might be one or two segregated areas for isolation, a medical gas rail system supplying more than one isolation room, but within the nursery area, would be permitted to be interconnected with the nursery system.

A.5.1.7.9 Typical plating would be nickel plating over copper or brass per Federal Specification QQ-N290, Class I, Type 7.

A.5.1.9 See Figure A.5.1.4.

A.5.1.9.2 See Table A.5.1.9.2.

Copyright National Fire Protection Association
Provided by IHS under license with NFPA
No reproduction or networking permitted without license from IHS
Not for Resale

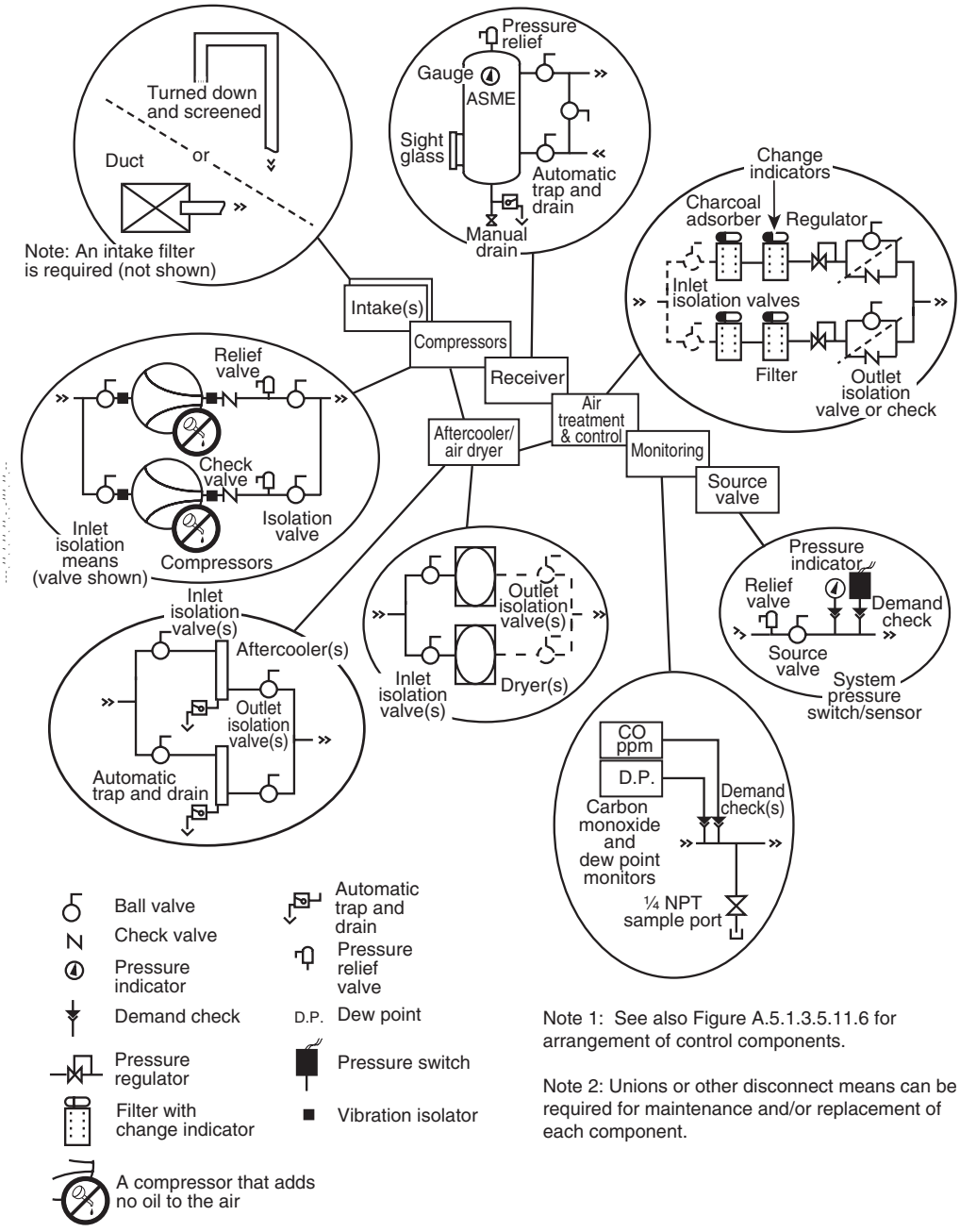

Note 1: See also Figure A.5.1.3.5.11.6 for arrangement of control components.

Note 2: Unions or other disconnect means can be required for maintenance and/or replacement of each component.

FIGURE A.5.1.3.5 Elements of a Typical Duplex Medical Air Compressor Source System (Level 1 Gas Systems).

Copyright National Fire Protection Association
Provided by IHS under license with NFPA
No reproduction or networking permitted without license from IHS
Not for Resale

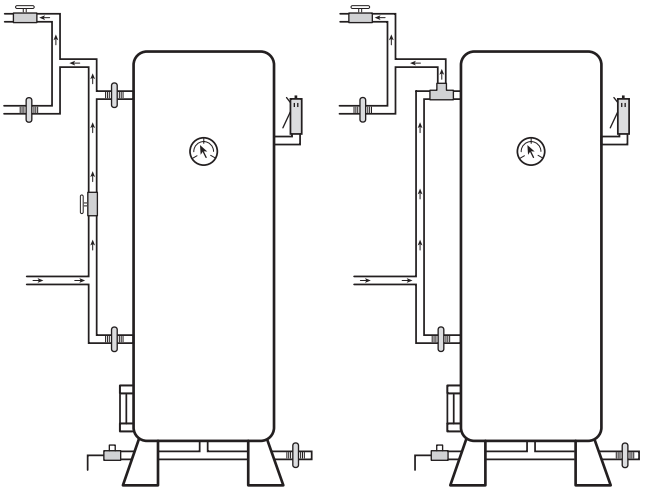

FIGURE A.5.1.3.5.11.4 Receiver Valving Arrangement.

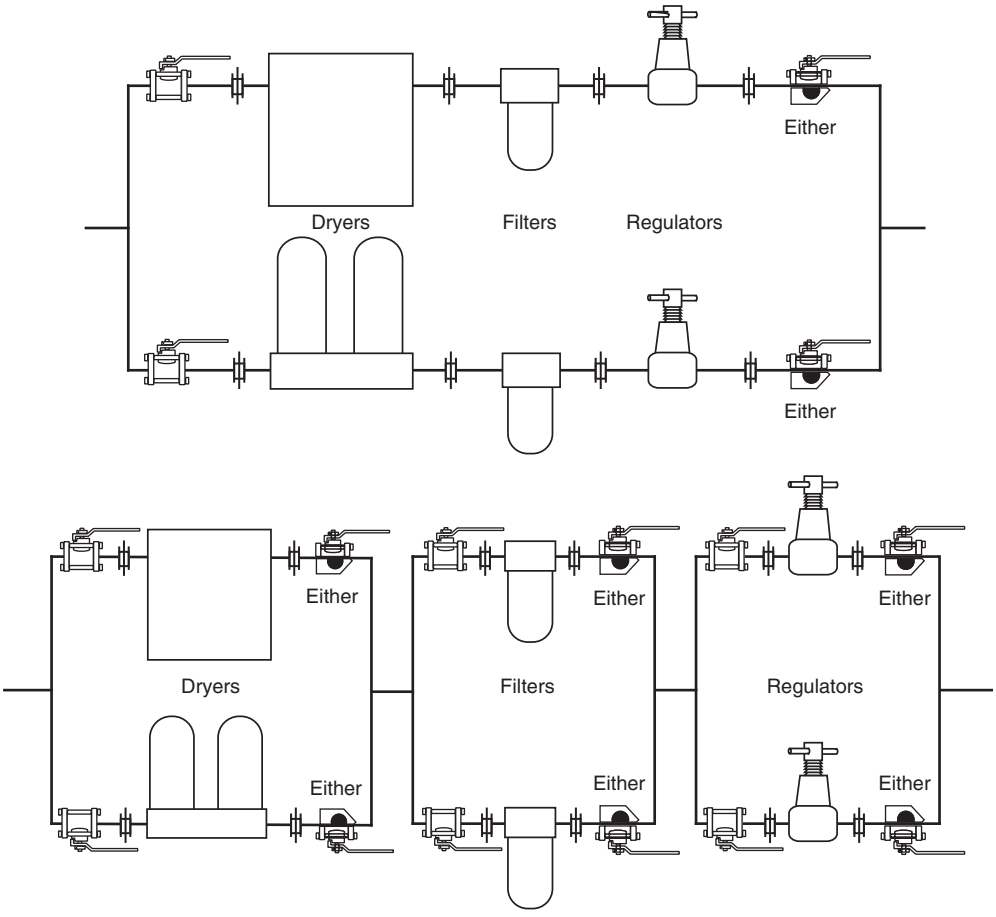

FIGURE A.5.1.3.5.11.6 Alternate Valving Sequences for Line Controls in Medical Air.

Copyright National Fire Protection Association
Provided by IHS under license with NFPA
No reproduction or networking permitted without license from IHS
Not for Resale

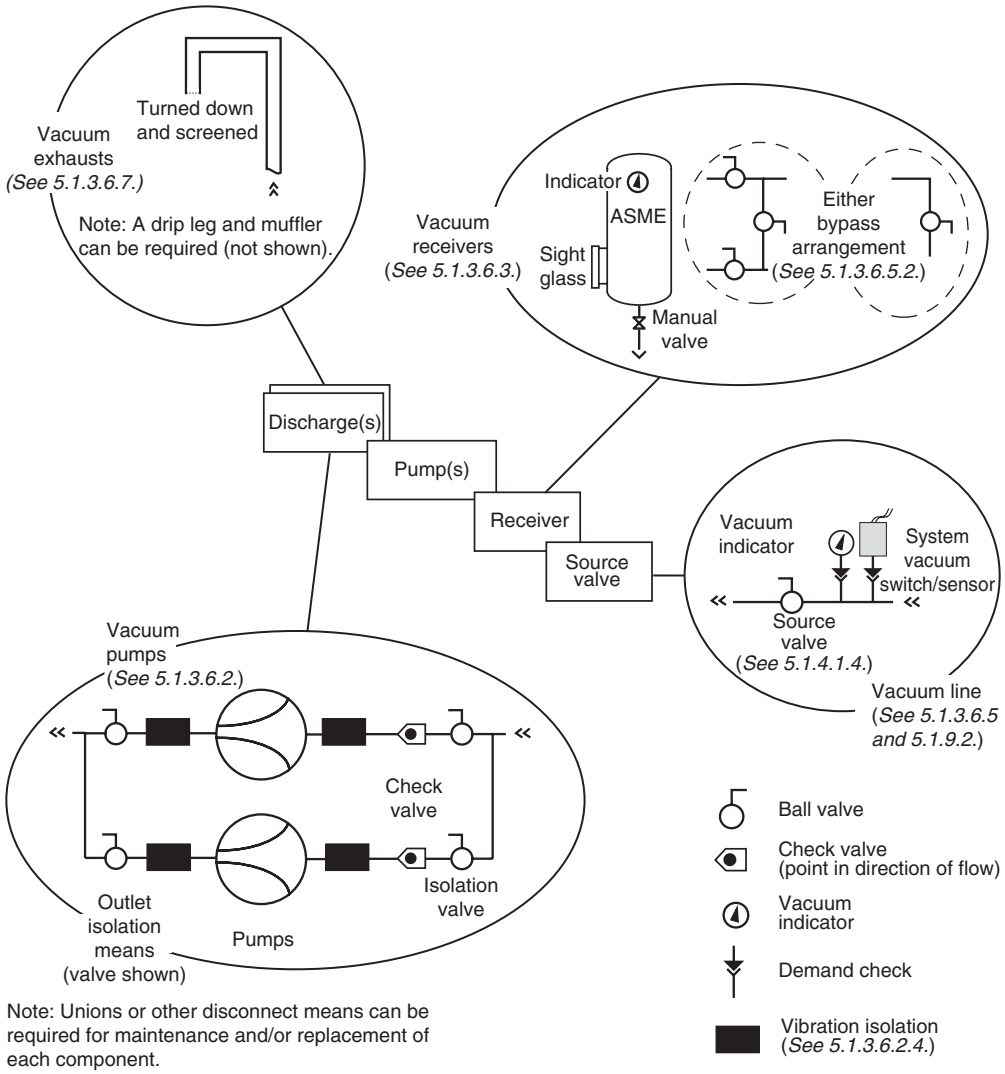

FIGURE A.5.1.3.6 Elements of a Typical Duplex Vacuum Source System (Level 1 Vacuum Systems).

Copyright National Fire Protection Association
Provided by IHS under license with NFPA
No reproduction or networking permitted without license from IHS
Not for Resale

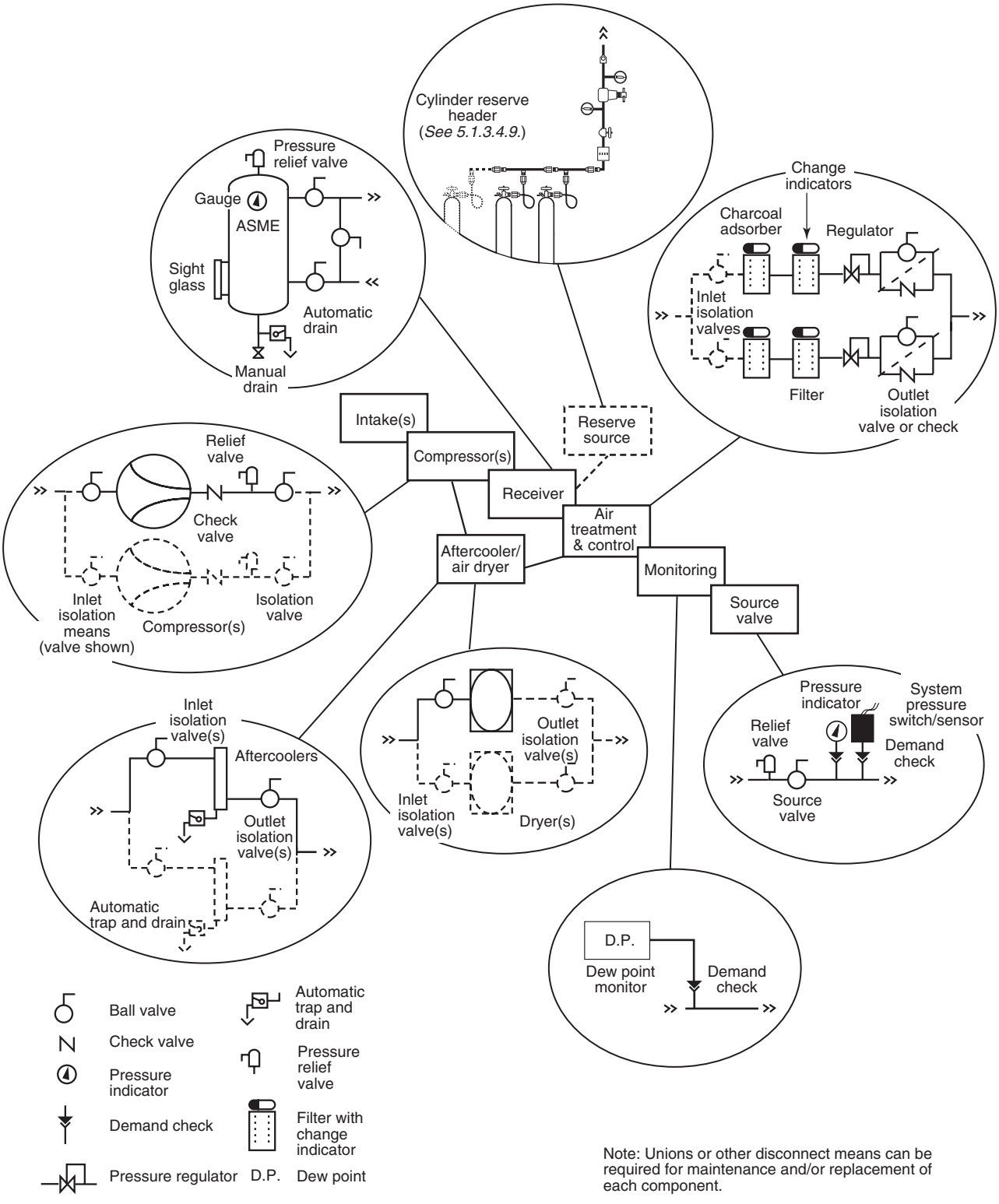

FIGURE A.5.1.3.8 Elements of Typical Instrument Air Source.

Copyright National Fire Protection Association
Provided by IHS under license with NFPA
No reproduction or networking permitted without license from IHS
Not for Resale

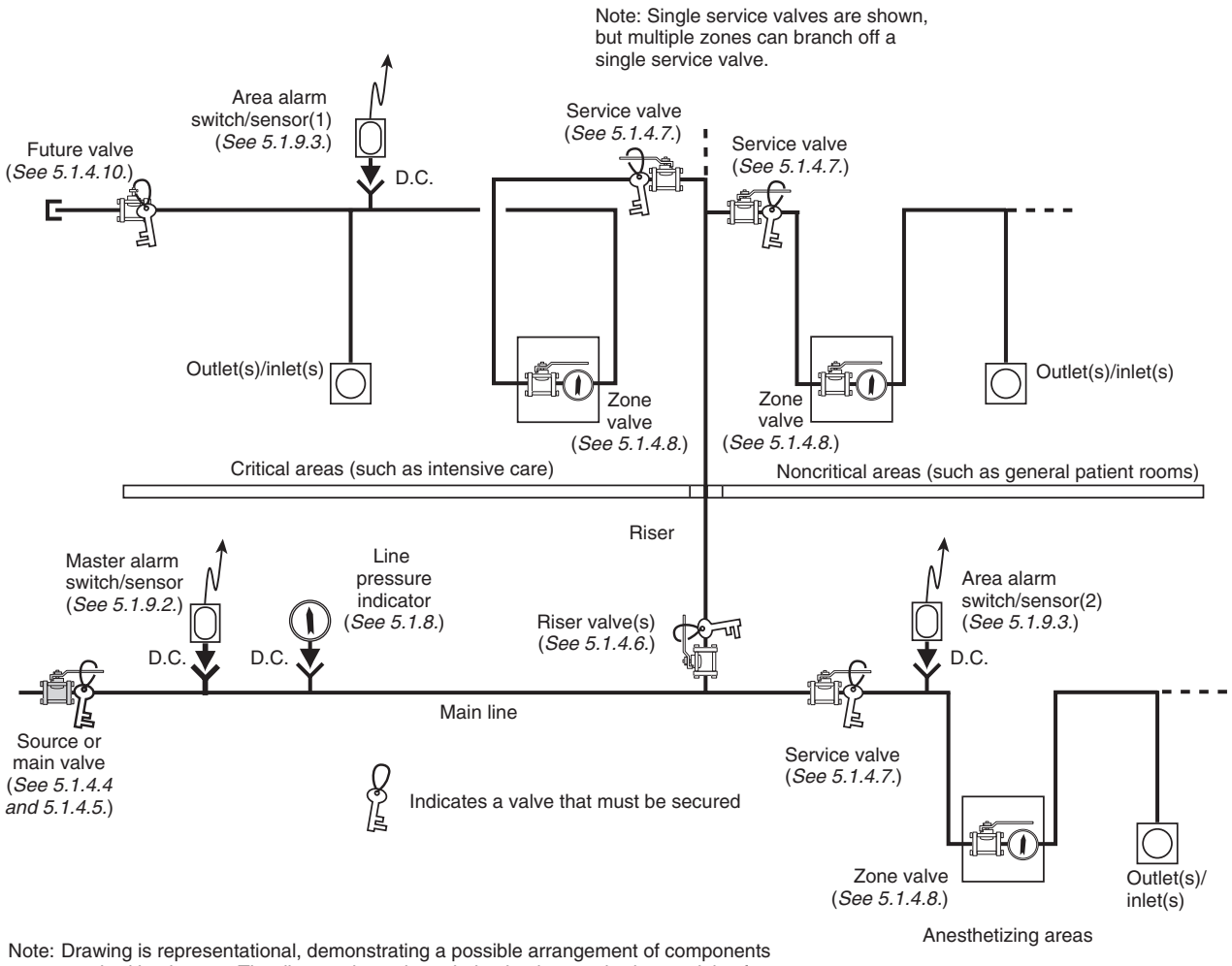

Note: Drawing is representational, demonstrating a possible arrangement of components required by the text. The diagram is not intended to imply a method, materials of construction, or more than one of many possible and equally compliant arrangements. Alternative arrangements are permitted if they meet the intent of the text. Listed paragraphs may not be the only paragraphs that apply.

1. Area alarms are required in critical care locations (examples may include intensive care units, coronary care units, angiography laboratories, cardiac catheterization laboratories, post anesthesia recovery rooms, and emergency rooms) and anesthetizing locations (examples may include operating rooms and delivery rooms). Refer to definitions for these areas.

2. Locations for switches/sensors are not affected by the presense of service or in-line valves (5.1.4.7.5, 5.1.4.9.2).

FIGURE A.5.1.4 Arrangement of Pipeline Components.

--`,,```,,,,````-`-`,,`,,`,`,,`---
Copyright National Fire Protection Association
Provided by IHS under license with NFPA
No reproduction or networking permitted without license from IHS
Not for Resale

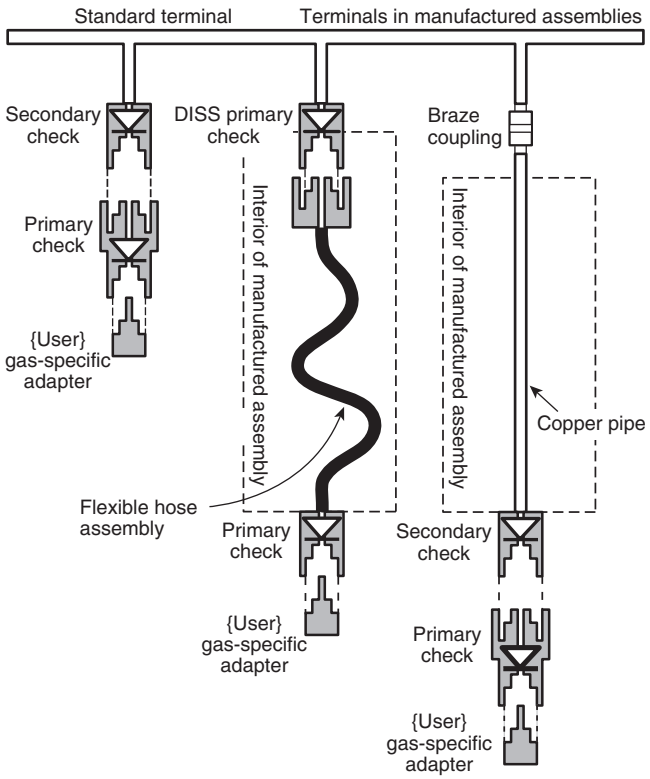

FIGURE A.5.1.6 Terminals in Manufactured Assemblies.

Table A.5.1.9.2 Requirements for Level 1 Master Alarms for Gas and Vacuum Systems

Alarm Condition	Manifold for Gas Cylinders w/o Reserve (5.1.3.4.10)	Manifold for Cryogenic Liquid Cylinders w/ Reserve (5.1.3.4.12)	Cryogenic Bulk w/Cryogenic Reserve (5.1.3.4.13)	Cryogenic Bulk w/Cylinder Reserve (5.1.3.4.13)	Medical Air Compressors (5.1.3.5)	Instrument Air Compressors (5.1.3.8)	Medical–Surgical Vacuum Pumps (5.1.3.6)	WAGD Producers (5.1.3.7)
Nitrogen main line pressure high	5.1.9.2.4(7)							
Nitrogen main line pressure low	5.1.9.2.4(7)							
Nitrogen changeover to secondary supply	5.1.3.4.10.6 5.1.9.2.4(1)							
Carbon dioxide main line pressure high	5.1.9.2.4(7)							
Carbon dioxide main line pressure low	5.1.9.2.4(7)							
Carbon dioxide changeover to secondary supply	5.1.3.4.10.6 5.1.9.2.4(1)							
Medical air main line pressure high	5.1.9.2.4(7)				5.1.9.2.4(7)			
Medical air main line pressure low	5.1.9.2.4(7)				5.1.9.2.4(7)			
Medical air changeover to secondary supply	5.1.3.4.10.6 5.1.9.2.4(1)							
Medical air dew point high					5.1.3.5.15(1) 5.1.9.2.4(10)			

Copyright National Fire Protection Association
Provided by IHS under license with NFPA
No reproduction or networking permitted without license from IHS
Not for Resale

Table A.5.1.9.2 *Continued*

Alarm Condition	Manifold for Gas Cylinders w/o Reserve (5.1.3.4.10)	Manifold for Cryogenic Liquid Cylinders w/ Reserve (5.1.3.4.12)	Cryogenic Bulk w/Cryogenic Reserve (5.1.3.4.13)	Cryogenic Bulk w/Cylinder Reserve (5.1.3.4.13)	Medical Air Compressors (5.1.3.5)	Instrument Air Compressors (5.1.3.8)	Medical–Surgical Vacuum Pumps (5.1.3.6)	WAGD Producers (5.1.3.7)
Oxygen main line pressure high	5.1.9.2.4(7)	5.1.9.2.4(7)	5.1.9.2.4(7)	5.1.9.2.4(7)				
Oxygen main line pressure low	5.1.9.2.4(7)	5.1.9.2.4(7)	5.1.9.2.4(7)	5.1.9.2.4(7)				
Oxygen changeover to secondary supply	5.1.3.4.10.6 5.1.9.2.4(1)	5.1.3.4.12.9(1) 5.1.9.2.4(1)	5.1.3.4.13.6(5) 5.1.9.2.4(1)	5.1.3.4.13.6(5) 5.1.9.2.4(1)				
Oxygen main supply less than one day (low contents)			5.1.3.4.13.6(1) 5.1.9.2.4(2)	5.1.3.4.13.6(1) 5.1.9.2.4(2)				
Oxygen reserve in use		5.1.3.4.12.9(3) 5.1.3.4.15.5 5.1.9.2.4(3)	5.1.3.4.13.6(2) 5.1.9.2.4(3)	5.1.3.4.13.6(2) 5.1.3.4.15.5 5.1.9.2.4(3)				
Oxygen reserve supply less than one day (low contents)		5.1.3.4.12.9(4) 5.1.9.2.4(5)	5.1.3.4.13.6(3) 5.1.9.2.4(5)					
Oxygen reserve pressure low (not functional)			5.1.3.4.11.6(4) 5.1.9.2.4(6)					
Nitrous oxide main line pressure high	5.1.9.2.4(7)	5.1.9.2.4(7)	5.1.9.2.4(7)	5.1.9.2.4(7)				
Nitrous oxide main line pressure low	5.1.9.2.4(7)	5.1.9.2.4(7)	5.1.9.2.4(7)	5.1.9.2.4(7)				
Nitrous oxide changeover to secondary supply	5.1.3.4.10.6 5.1.9.2.4(1)	5.1.3.4.12.9(1) 5.1.9.2.4(1)	5.1.3.4.13.6(5) 5.1.9.2.4(1)	5.1.3.4.13.6(5) 5.1.9.2.4(1)				
Nitrous oxide main supply less than one day (low contents)			5.1.3.4.13.6(1) 5.1.9.2.4(2)	5.1.3.4.13.6(1) 5.1.9.2.4(2)				
Nitrous oxide reserve in use		5.1.3.4.12.9(3) 5.1.3.4.15.5 5.1.9.2.4(3)	5.1.3.4.13.6(2) 5.1.9.2.4(3)	5.1.3.4.13.6(2) 5.1.3.4.15.5 5.1.9.2.4(3)				
Nitrous oxide reserve supply less than one day (low contents)		5.1.3.4.12.9(4) 5.1.9.2.4(5)	5.1.3.4.13.6(3) 5.1.9.2.4(5)					
Nitrous oxide reserve pressure low (not functional)			5.1.3.4.13.6(4) 5.1.9.2.4(6)					
Medical–surgical main line vacuum low							5.1.9.2.4(8)	
WAGD main line vacuum low								5.1.9.2.4(8)
Local alarm					5.1.3.5.14 5.1.9.2.4(9) 5.1.9.5.2	5.1.3.8.10 5.1.9.2.4(9) 5.1.9.5.2	5.1.3.6.8 5.1.9.2.4(9) 5.1.9.5.2	5.1.3.7.4 5.1.9.2.4(9) 5.1.9.5.2
Instrument air main line pressure high						5.1.9.2.4(7)		
Instrument air main line pressure low						5.1.9.2.4(7)		
Instrument air dew point high						5.1.3.8.10.1 5.1.9.2.4(12)		
Instrument air cylinder reserve in use (if provided)						5.1.3.8.10.2(1)		
Instrument air cylinder reserve less than one hour supply						5.1.3.8.10.2(2)		

Copyright National Fire Protection Association
Provided by IHS under license with NFPA
No reproduction or networking permitted without license from IHS
Not for Resale

Table A.5.1.9.3 Requirements for Level 1 Area Alarms

Alarm Condition	Paragraph Number of Requirement
High line pressure	5.1.9.3
(for each gas piped to the area)	5.1.9.3.1
	5.1.9.3.2
	5.1.9.3.4
Low line pressure	5.1.9.3
(for each gas piped to the area)	5.1.9.3.1
	5.1.9.3.2
	5.1.9.3.4
Low medical–surgical vacuum	5.1.9.3
(if piped to the area)	5.1.9.3.1
	5.1.9.3.3
	5.1.9.3.4
Low WAGD vacuum	5.1.9.3
(if piped to the area)	5.1.9.3.1
	5.1.9.3.3
	5.1.9.3.4

A.5.1.9.3 See Table A.5.1.9.3.

A.5.1.9.3.4(1) This signal is intended to provide immediate warning for loss of, or increase in, system pressure for each individual vital life support and critical care area.

A.5.1.9.3.4(2) This signal is intended to provide immediate warning for loss of, or increase in, system pressure for all anesthetizing locations supplied from a single branch line — not for each individual operating or delivery room.

A.5.1.9.5 Activation of any of the warning signals should immediately be reported to the department of the facility responsible for the medical gas piping system involved. If the medical gas is supplied from a bulk supply system, the owner or the organization responsible for the operation and maintenance of that system, usually the supplier, should also be notified. As much detail as possible should be provided. See Table A.5.1.9.5.

A.5.1.10.1.4 Operation of piped medical gas systems at gauge pressures in excess of 1280 kPa (185 psi) involves certain restrictions because of the limitations in materials.

A.5.1.10.3.1 A distinction is made between deep-socket solder-joint fittings (ASME B16.22) and those having shallow sockets for brazing (ASME B16.50). The use of shallow-socket brazing fittings improves the quality of the brazement without decreasing its strength, particularly in larger sizes, which are difficult to heat. See Table A.5.1.10.3.1 for socket depths conforming to ASME B16.50. The installer can use ASME B16.50 fittings (if available) or have the sockets on ASME B16.22 fittings cut down to ASME B16.50 depths. Where shallow-socket fittings are used for the medical gas piping, care should be taken to avoid their use in other piping systems where joints could be soldered instead of brazed.

A.5.1.10.5.5 The intent is to provide an oxygen-free atmosphere within the tubing and to prevent the formation of copper oxide scale during brazing. This is accomplished by filling the piping with a low-volume flow of low-pressure inert gas.

A.5.1.10.5.5.12 This is to assure a quality joint and to prevent the formation of copper oxide on the inside and outside surfaces of the joint.

A.5.1.10.6.5 Gas mixtures are commonly used in GTAW autogenous fusion welding. The identification of a gas mixture as "75He 25Ar" is a common industry term to define a commercially available grade from gas suppliers. Should test welding results lead to questions about the mixture percentage or gas quality, another bottle should be substituted and test welds performed.

A.5.1.12 All testing should be completed before putting a new piping system, or an addition to an existing system, into service. Test procedures and the results of all tests should be made part of the permanent records of the facility of which the piping system forms a part. They should show the room and area designations, dates of the tests, and name(s) of persons conducting the tests.

A.5.1.12.3.2 This is the final pressure test of the completely installed system and is intended to locate any leaks that would be more likely to occur at lower pressure, for example, leaks in station outlet valve seals.

A.5.1.12.3.11(3) The committee recognizes that current clinical practice is to use analyzers that might not be able to analyze oxygen to current U.S.P. requirements of 99 percent, and that these analyzers frequently have an error of up to 3 percent.

A.5.1.13 All cylinders containing compressed gases, such as anesthetic gases, oxygen, or other gases used for medicinal purposes, whether these gases are flammable or not, should comply with the specifications and be maintained in accordance with regulations of the U.S. Department of Transportation.

Cylinder and container temperatures greater than 52°C (125°F) can result in excessive pressure increase. Pressure relief devices are sensitive to temperature and pressure. When relief devices actuate, contents are discharged.

A.5.1.13.1.4 Vacuum systems from station inlets to the exhaust discharge should be considered contaminated unless proven otherwise. Methods exist to disinfect the system or portions thereof.

Clogging of regulators, for example, with lint, debris, or dried body fluids, reduces vacuum system performance.

A.5.2.1 Section 5.1 covers requirements for Level 1 piped gas and vacuum systems; Section 5.2 covers Level 2 piped gas and vacuum systems; Section 5.3 covers Level 3 piped gas and vacuum systems. Laboratory systems are no longer covered by Chapter 5 (2002 edition).

A.5.3 A Level 3 vacuum system is not intended for Level 1 medical–surgical vacuum applications. A Level 3 wet piping system is designed to accommodate liquid, air–gas, and solids through the service inlet. A Level 3 dry piping system is designed to accommodate air–gas only through the service inlet, with liquids and solids being trapped before entering the system.

A.5.3.1 Section 5.1 covers requirements for Level 1 piped gas and vacuum systems; Section 5.2 covers Level 2 piped gas and vacuum systems; Section 5.3 covers Level 3 piped gas and vacuum systems. Laboratory systems are no longer covered by Chapter 5 (2002 edition).

--`,,```,,,,````-`-`,,`,,`,`,,`---

Copyright National Fire Protection Association
Provided by IHS under license with NFPA
No reproduction or networking permitted without license from IHS
Not for Resale

Table A.5.1.9.5 Requirements for Level 1 Local Alarms

Alarm Condition	Medical Air Compressors					
	Oil-less (Sealed bearing) 5.1.3.5.4.1(1)	Oil-Free (separated) 5.1.3.5.4.1(2)	Liquid Ring (water-sealed) 5.1.3.5.4.1(1)	Instrument Air Compressors	Medical–Surgical Vacuum Pumps	WAGD Producers
Backup (lag) compressor in operation	5.1.3.5.14.5 5.1.9.5.4(1)	5.1.3.5.14.5 5.1.9.5.4(1)	5.1.3.5.14.5 5.1.9.5.4(1)			
Backup (lag) medical–surgical vacuum pump in operation					5.1.3.6.8 5.1.9.5.4(4)	
Backup (lag) WAGD producer in operation						5.1.3.7.4.1 5.1.3.7.4.4 5.1.9.5.4(5)
Backup (lag) instrument air compressor in operation				5.1.3.8.10.1(1) 5.1.9.5.4(1)		
Carbon monoxide high	5.1.3.5.15(2) 5.1.9.5(2)	5.1.3.5.15(2) 5.1.9.5(2)	5.1.3.5.15(2) 5.1.9.5(2)			
High discharge air temperature	5.1.3.5.14.3 5.1.9.5.4(9)	5.1.3.5.14.4(1) 5.1.9.5.4(9)				
High water in receiver	5.1.3.5.14.1 5.1.9.5.4(7)	5.1.3.5.14.1 5.1.9.5.4(7)	5.1.3.5.14.1 5.1.9.5.4(7)			
High water in separator			5.1.3.5.14.2 5.1.9.5.4(8)			
Medical air dew point high	5.1.3.5.15(1) 5.1.9.5.4(3)	5.1.3.5.15(1) 5.1.9.5.4(3)	5.1.3.5.15(1) 5.1.9.5.4(3)			
Instrument air dew point high				5.1.3.8.10.1(2) 5.1.9.5.4(6)		

Table A.5.1.10.3.1 Socket Depths for ASME B16.50 Brazing Fittings

Tube Size (in.)	Socket Depth (in.)
¼ (⅜ O.D.)	0.17
⅜ (½ O.D.)	0.2
½ (⅝ O.D.)	0.22
¾ (⅞ O.D.)	0.25
1 (1⅛ O.D.)	0.28
1¼ (1⅜ O.D.)	0.31
1½ (1⅝ O.D.)	0.34
2 (2⅛ O.D.)	0.40
2½ (2⅝ O.D.)	0.47
3 (3⅛ O.D.)	0.53
4 (4⅛ O.D.)	0.64
5 (5⅛ O.D.)	0.73
6 (6⅛ O.D.)	0.83

A.5.3.3.2 When the storage/supply enclosure is remote from the single treatment facility, it should be locked for security reasons to prevent tampering. Access should be only via authorized staff or fire department. When the enclosure is within the single treatment facility, it is left to the discretion of the single treatment facility management as to whether greater benefit is achieved by immediate access or by security. An enclosure with direct access from a public hallway should be locked. If the door to the enclosure opens onto an exit access corridor, see 5.1.3.3.3.1(F). See Figure A.5.3.3.2.

A.5.3.3.4.4 See Figure A.5.3.3.4.4 for an illustration of single treatment locations.

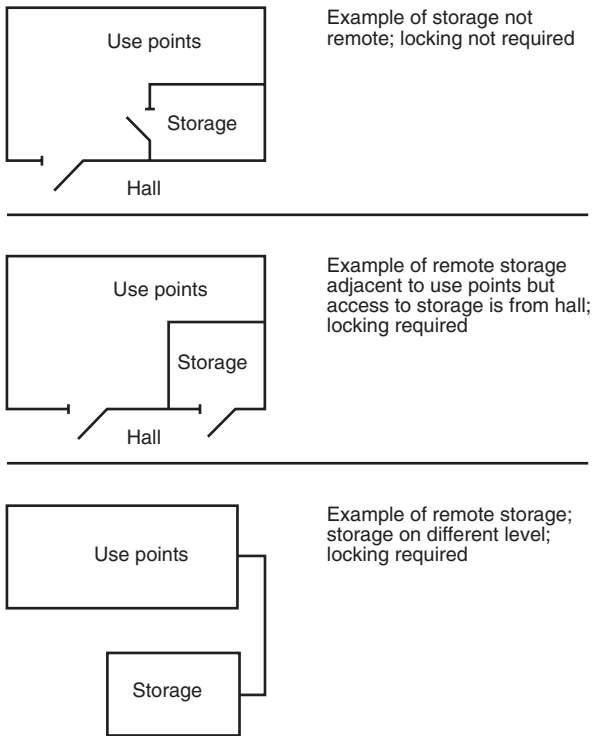

FIGURE A.5.3.3.2 Examples of Storage/Supply Enclosures.

Copyright National Fire Protection Association
Provided by IHS under license with NFPA
No reproduction or networking permitted without license from IHS
Not for Resale

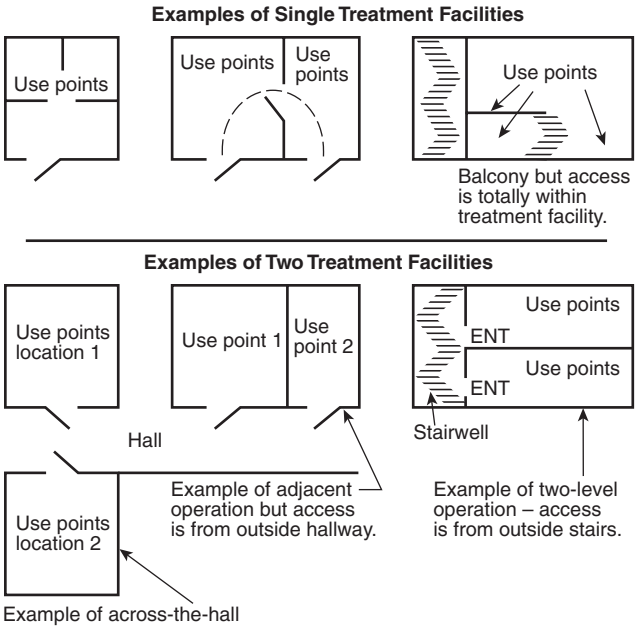

FIGURE A.5.3.3.4.4 Examples of Single Treatment Locations.

A.5.3.3.4.4.2 If the supply system is within the confines of a single treatment facility, a simple manual transfer is permissible. Only high/low pressure alarms are required. The gases are to be manifolded so a quick manual transfer is possible without life-threatening consequences.

However, if the supply system is remote, a prompt transfer of gases becomes more difficult. It could require transcending one or more flights of stairs and/or going to a remote location on the same floor. Under these situations an automatic system is required.

A.5.3.3.4.4.4 The installation of a supply serving more than one single treatment facility creates by its very nature a remote location relative to the other facility. Because more than one practice could be involved, the transfer of oxygen and nitrous oxide gases is to be automatically achieved.

A.5.3.3.5 Level 3 compressed air and nitrogen gas systems are used primarily to drive gas-powered power devices. See Figure A.5.3.3.5 for an illustration of this type of system. Similar applications are in podiatry and plastic surgery. Examples of these are air used to drive turbine-powered drills and air used to dry teeth and gums. Some dental hand pieces have an internal self-contained air return system, while other hand pieces discharge air into the atmosphere. Some discharge a mixture of air and water. Nitrogen is often piped as an alternate or reserve supply to the compressor system.

The application of dental compressed air is not used for life-support purposes such as respirators, IPPB machines, analgesia, anesthesia, and so forth. Air discharged into the oral cavity is incidental and not a primary source of air to sustain life. However, if there is a coincident use of dental air for providing respiratory support, the requirements of dental air will be superseded by those of the respiratory support, and the compressed air system has to produce the higher quality, medical compressed air as defined in Chapter 3. This could affect the selection of a compressor.

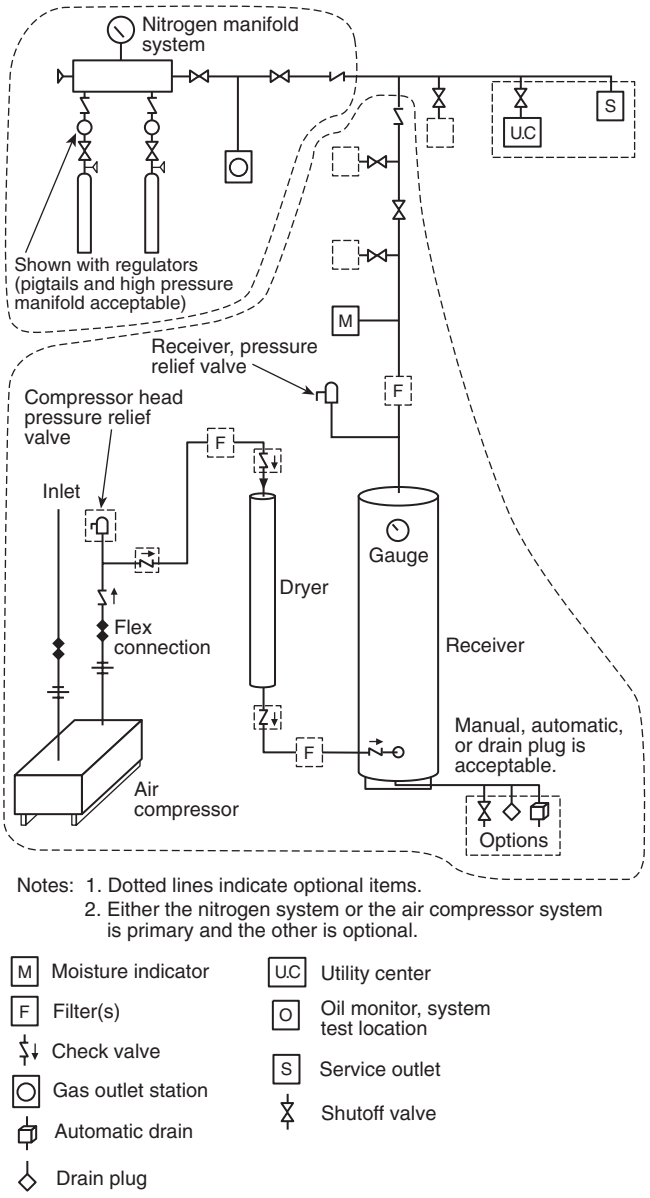

FIGURE A.5.3.3.5 Level 3 Gas-Powered Devices Supply System.

A dental compressed air system should not be used to provide power for an air-powered evacuation system without specific attention paid to the discharge of the evacuated gases and liquids. An open discharge of evacuated gases into the general environment of an operatory could compromise the quality of breathing air in the treatment facility. Air discharge should be vented to the outside of the building through a dedicated vent.

An air-powered evacuation system might require significant quantities of air to operate.

Manufacturer's recommendations should be followed regarding proper sizing of the air compressor. Inadequate sizing can result in overheating, premature compressor failures, and inadequate operating pressures and flows.

--`,,`,,,`-`-`,,`,,`,`,,`---
Copyright National Fire Protection Association
Provided by IHS under license with NFPA
No reproduction or networking permitted without license from IHS
Not for Resale

A.5.3.3.5.2 Compressed-air quality can be compromised and expected life of system components can be shortened if an undersized system is installed. Manufacturer's recommendations should be followed regarding proper sizing of the air compressor(s).

A.5.3.3.5.5 A color dew point monitor downstream of the receiver indicating the quality of air coming into the receiver is desirable.

A color dew point monitor in the main treatment facility is appropriate to help the staff promptly identify when the system is being degraded with air of a dew point higher than is acceptable.

The design of the color monitor should be such that the normal tolerance of variations will limit the maximum moisture at 39°F at a gauge pressure of 100 psi (3.9°C at 690 kPa) at activation.

A.5.3.3.5.7 The environmental air source for the compressor inlet should take into consideration possible contamination by particulates, concentrations of biological waste contaminants, ozone from nearby brush-type electric motors, and exhaust fumes from engines.

Air taken from an outside atmosphere could cause harmful condensation problems in the compressor. Long runs of inlet tube should also be avoided as it will degrade compressor performance. The compressor manufacturer's recommendations should be followed regarding appropriate pipe size to prevent possible degradation of system performance.

A dental air compressor and dental vacuum system can be in the same equipment room as long as the inlet for the dental air compressor does not draw air from a room or space containing an open discharge for the dental vacuum system.

Atmospheric air in an operatory can have traces of mercury vapor and other contaminants. A compressor inlet location that would draw its supply directly from an operatory should be avoided.

A.5.3.3.5.8 If nitrogen is used as a backup supply to a compressed gas system, the nitrogen operating pressure should be regulated so as not to exceed the operating pressure of the Level 3 compressed air system.

A.5.3.3.5.8.6 The cubic feet (or cubic meters) of stored nitrogen gas is not restricted.

A.5.3.3.6 A Level 3 vacuum system is not intended for Level 1 vacuum applications. A wet piping system is designed to accommodate liquid, air–gas, and solids through the service inlet. A dry piping system is designed to accommodate air–gas only through the service inlet. [Liquid(s) and solid(s) are trapped before entering the service inlet.] See Figure A.5.3.3.6(a) through Figure A.5.3.3.6(d).

A.5.3.3.6.3 Improper design will permit gas pressure to build up in the ventilation system and might blow the trap on liquid seals. See Figure A.5.3.3.6.3(a) and Figure A.5.3.3.6.3(b).

A.5.3.3.6.4.8 Care should be taken to ensure the dual exhaust systems do not develop excessive back pressure when using a common exhaust line.

A.5.3.4 See Figure A.5.3.4 for diagrams showing emergency shutoff valve locations. Should a fire occur at night or when the facility is not in use, fire fighters should not be confronted with a potential pressurized gas source that could feed the fire and cause extensive damage and risk of life. Good economics also dictate that when the system is not in use, the leakage of gas through hose, couplings, and so forth, can be minimized if the system is shut off and portable equipment disconnected.

A.5.3.5 Service outlets can be recessed or otherwise protected from damage.

A.5.3.5.2 This configuration will ensure that the required pressure and flow meet the secondary equipment manufacturer's requirements.

A.5.3.10.7.5 The intent is to provide an oxygen-free atmosphere within the tubing and to prevent the formation of copper oxide scale during brazing. This is accomplished by filling the piping with a low-volume flow of low-pressure inert gas.

A.5.3.10.10.3 One of the major concerns is the cross-connection of piping systems of different gases. The reason for different sizes is to prevent cross-connections, not for capacity concerns.

A.5.3.12.3.10(3)(b) The committee recognizes that current clinical practice is to use analyzers that might not be able to analyze oxygen to current U.S.P. requirements of 99 percent, and that these analyzers frequently have an error of up to 3 percent.

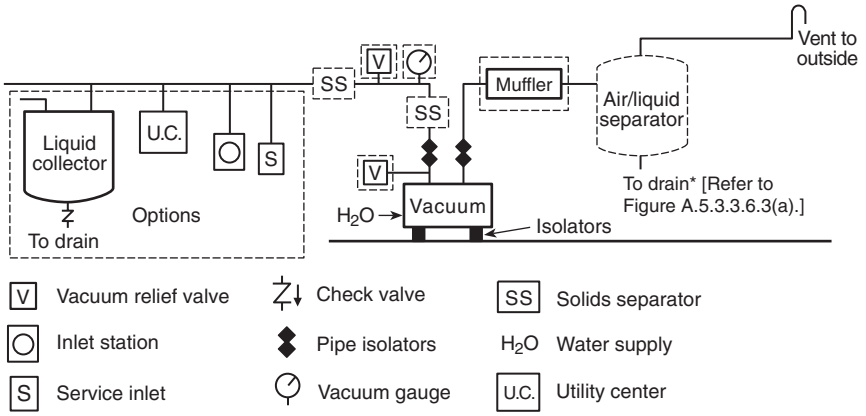

Note: Dotted lines indicate optional items.
*Does not have to be below floor.

FIGURE A.5.3.3.6(a) Typical Level 3 Wet or Dry Piping Systems with Single Vacuum Pump Source.

Copyright National Fire Protection Association
Provided by IHS under license with NFPA
No reproduction or networking permitted without license from IHS
Not for Resale

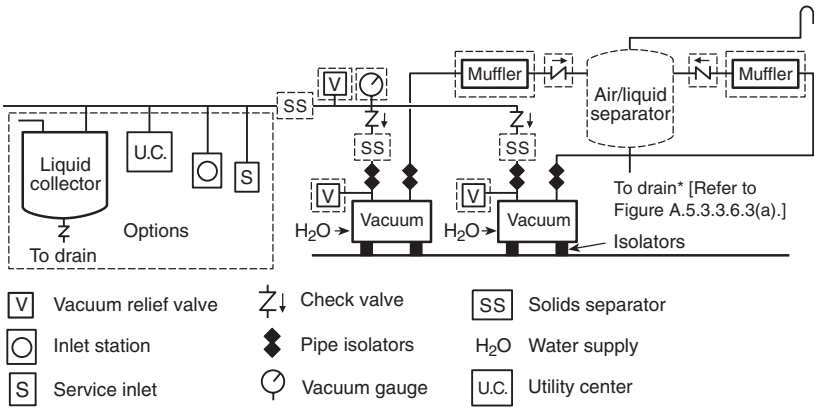

Note: Dotted lines indicate optional items.
*Does not have to be below floor.

FIGURE A.5.3.3.6(b) Typical Level 3 Wet or Dry Piping System with Duplex Vacuum Source with Air/Liquid Separator.

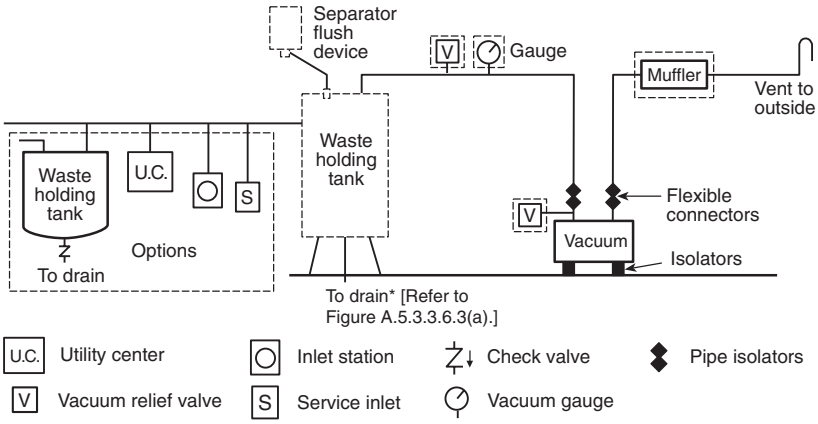

Note: Dotted lines indicates optional items.
*Does not have to be below floor.

FIGURE A.5.3.3.6(c) Typical Level 3 Wet or Dry Piping System with Single Vacuum Source.

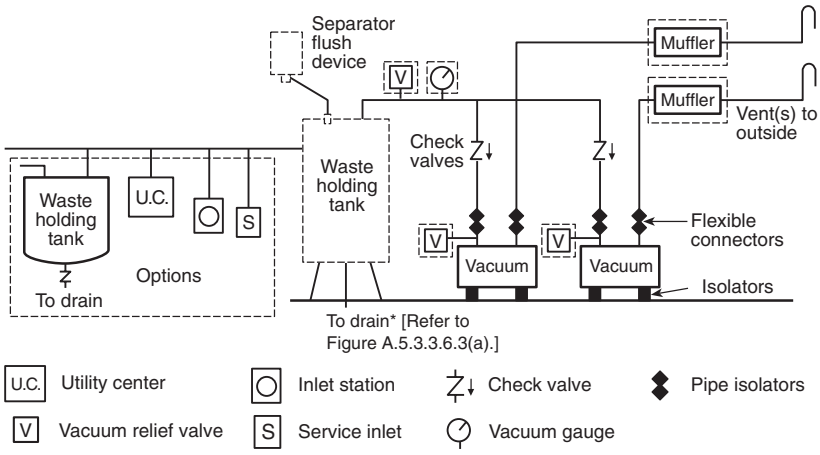

Note: Dotted lines indicates optional items.
*Does not have to be below floor.

FIGURE A.5.3.3.6(d) Typical Level 3 Wet or Dry Piping System with Duplex Vacuum Source with Waste Holding Tank.

Copyright National Fire Protection Association
Provided by IHS under license with NFPA
No reproduction or networking permitted without license from IHS
Not for Resale

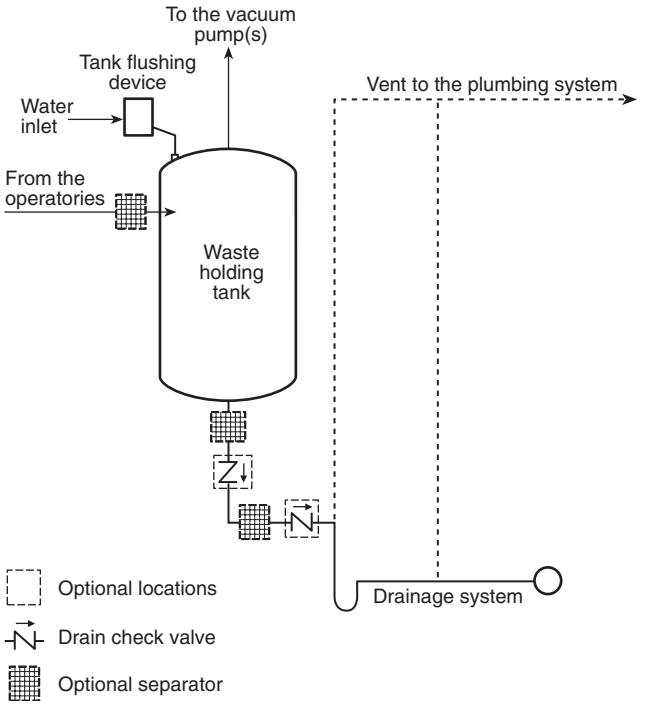

FIGURE A.5.3.3.6.3(a) Drainage from a Gravity Drained Liquid Collector Tank.

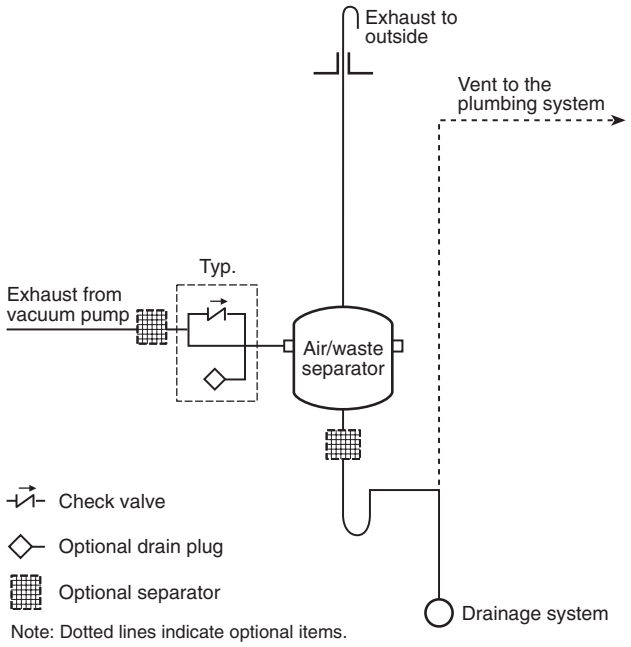

FIGURE A.5.3.3.6.3(b) Drainage from a Positive Discharge Vacuum Pump through an Air/Liquid Separator.

A.6.1 The application of requirements contained in this chapter for specific types of health care facilities can be found in Chapters 13 through 19.

A.11.1 The application of requirements contained in this chapter for specific types of health care facilities can be found in Chapters 6, 13, 14, 17, and 18.

Some considerations in determining which document (NFPA 99 or NFPA 45) should be consulted first when designing or operating a laboratory in a health care facility (i.e., those laboratories under the jurisdiction of a health care facility as defined in Chapter 3 of NFPA 99) are shown in Table A.11.1 (Table A.1.3.2 in NFPA 45-1996, *Standard on Fire Protection for Laboratories Using Chemicals*, and Sections 1.1 and 11.1 in NFPA 99-2002). Sections 1.1 and 11.1 in NFPA 99–2002 should be reviewed in conjunction with the table.

A.11.1.1 Before a hazardous chemical is ordered, controls should be established to ensure that adequate facilities and procedures are available for receiving, storing, using, and disposing of the material. Information sources include the following:

NFPA 49, *Hazardous Chemicals Data*

NFPA 325, *Guide to Fire Hazard Properties of Flammable Liquids, Gases, and Volatile Solids*

NFPA 491, *Guide to Hazardous Chemical Reactions*

Note that NFPA 49 and NFPA 325 are available in the NFPA publication *Fire Protection Guide to Hazardous Materials*, 12th edition, 1997.

Class IA and IB flammable liquids in glass containers larger than the 1 qt (0.91 L) size should be transported in suitable containers of sufficient size to hold the contents of the glass containers.

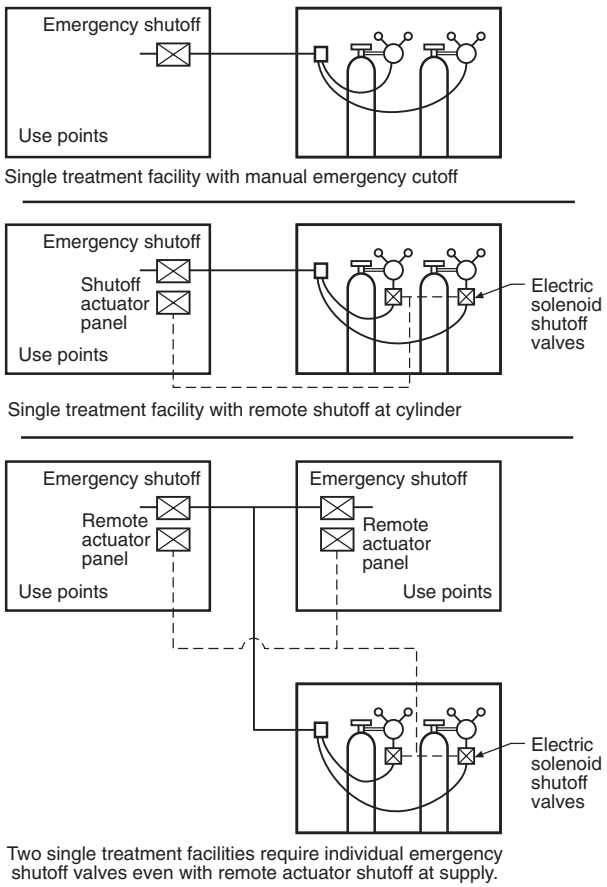

FIGURE A.5.3.4 Valves in Level 3 Facilities.

Copyright National Fire Protection Association
Provided by IHS under license with NFPA
No reproduction or networking permitted without license from IHS
Not for Resale

Table A.11.1 Using NFPA Documents for Laboratories in Health Care Facilities

Location of Laboratory	Primary Reference Document
Laboratory in bldg. with inpatients	99
Laboratory in bldg. with outpatients incapable of self-preservation	99
Laboratory in a bldg. with outpatients capable of self-preservation	45

A.11.1.3 Although NFPA 45 provides basic requirements and guidance for laboratory design, fire separation and sprinkler requirements are more stringent for laboratories in health care facilities. In addition, NFPA 99 has more stringent and realistic limitations of quantities of flammable liquids in laboratories, requires hood discharge above the roof, allows valves on emergency water supplies, encourages laboratory safety program activities, and recommends placement of flammable gas cylinders outside of the laboratory.

A.11.11.2.1 Piping systems supplying medical gases to patients should be reserved exclusively for that purpose so as to protect the patients from administration of gas other than that intended for their use. Therefore laboratory gas piping systems should not be used to pipe gas for use by hospital patients. This warning is also intended to apply to piping systems intended to supply gas to patients within a laboratory facility. Such a system should not be used to supply laboratory equipment other than that directly involved with the patient procedure.

A.11.11.3.2 Any laboratory (such as for analysis, research, or teaching) in a hospital that is used for purposes other than direct support of patient therapy should preferably have its own self-supporting vacuum system, independent of the medical–surgical vacuum system. A small laboratory in patient care areas used in direct support of patient therapy should not be required to be connected directly to the receiver or have fluid traps, scrubbers, and so forth, separate from the rest of the medical–surgical vacuum system.

A.13.3.5.1(3)(c) It is the intent to provide a simple, safe piping system for small facilities. Although the number of use points could be a consideration, it was felt that actual gas use is a more accurate indicator of complexity. Applications involving a storage in excess of 85 m^3 (3000 ft^3) would have a complexity warranting installation in accordance with the provisions of Level 1 patient gas distribution systems.

Although the principal intent is to provide simple installations for single treatment facilities, numerous applications exist where a remote use point creates essentially a second treatment facility or where the supply system might be shared by another health care professional such as other dentist, podiatrist, oral surgeon, or general medicine practitioner. The addition of another treatment facility requires incremental safety precautions.

A maximum of two single treatment facilities also approximates the limit with which a 85 m^3 (3000 ft^3) supply system can provide [143 m^3 (5000 ft^3) when liquid oxygen is used].

It is acknowledged that older user analgesia equipment has offered a nitrous oxide lockout device that requires a minimum of 3 L/min oxygen flow. However, a reasonable percentage of older equipment without this safety feature is in daily use. The storage and piping system is based upon the potential use, either initially or subsequently, of one of the older style analgesia equipment in one of the single treatment facilities. The quantity of 85 m^3 (3000 ft^3), or 143 m^3 (5000 ft^3) if liquid oxygen storage, is to be taken as the total combined storage of gases if there is more than one supply system in the single treatment facility.

A.13.3.11 NFPA 45, *Standard on Fire Protection for Laboratories Using Chemicals*, establishes basic requirements for all laboratories using chemicals, but important additional requirements are contained in Chapter 11 and in Chapters 5, 6, and 8.

A.14.3.5.1(3)(c) It is the intent to provide a simple, safe piping system for small facilities. Although the number of use points could be a consideration, it was felt that actual gas use is a more accurate indicator of complexity. Applications involving a storage in excess of 85 m^3 (3000 ft^3) would have a complexity warranting installation in accordance with the provisions of Level 1 patient gas distribution systems.

Although the principal intent is to provide simple installations for single treatment facilities, numerous applications exist where a remote use point creates essentially a second treatment facility or where the supply system might be shared by another health care professional such as other dentist, podiatrist, oral surgeon, or general medicine practitioner. The addition of another treatment facility requires incremental safety precautions.

A maximum of two single treatment facilities also approximates the limit with which a 85 m^3 (3000 ft^3) supply system can provide [143 m^3 (5000 ft ^{3}) when liquid oxygen is used].

It is acknowledged that older user analgesia equipment has offered a nitrous oxide lockout device that requires a minimum of 3 L/min oxygen flow. However, a reasonable percentage of older equipment without this safety feature is in daily use. The storage and piping system is based upon the potential use, either initially or subsequently, of one of the older style analgesia equipment in one of the single treatment facilities. The quantity of 85 m^3 (3000 ft^3), or 143 m^3 (5000 ft^3) if liquid oxygen storage, is to be taken as the total combined storage of gases if there is more than one supply system in the single treatment facility.

A.17.3.5.1(3)(c) It is the intent to provide a simple, safe piping system for small facilities. Although the number of use points could be a consideration, it was felt that actual gas use is a more accurate indicator of complexity. Applications involving a storage in excess of 85 m^3 (3000 ft^3) would have a complexity warranting installation in accordance with the provisions of Level 1 patient gas distribution systems.

Although the principal intent is to provide simple installations for single treatment facilities, numerous applications exist where a remote use point creates essentially a second treatment facility or where the supply system might be shared by another health care professional such as other dentist, podiatrist, oral surgeon, or general medicine practitioner. The addition of another treatment facility requires incremental safety precautions.

A maximum of two single treatment facilities also approximates the limit with which a 85 m^3 (3000 ft^3) supply system can provide [143 m^3 (5000 ft^3) when liquid oxygen is used].

It is acknowledged that older user analgesia equipment has offered a nitrous oxide lockout device that requires a minimum of 3 L/min oxygen flow. However, a reasonable percentage of older equipment without this safety feature is in daily

--`,,`,,,-`-`,,`,,`,`,,`---
Copyright National Fire Protection Association
Provided by IHS under license with NFPA
No reproduction or networking permitted without license from IHS
Not for Resale

use. The storage and piping system is based upon the potential use, either initially or subsequently, of one of the older style analgesia equipment in one of the single treatment facilities. The quantity of 85 m^3 (3000 ft^3), or 143 m^3 (5000 ft^3) if liquid oxygen storage, is to be taken as the total combined storage of gases if there is more than one supply system in the single treatment facility.

A.17.3.11 This is in addition to other nursing home requirements listed in Section 17.3 of NFPA 99.

A.18.3.5.1(3)(c) It is the intent to provide a simple, safe piping system for small facilities. Although the number of use points could be a consideration, it was felt that actual gas use is a more accurate indicator of complexity. Applications involving a storage in excess of 85 m^3 (3000 ft^3) would have a complexity warranting installation in accordance with the provisions of Level 1 patient gas distribution systems.

Although the principal intent is to provide simple installations for single treatment facilities, numerous applications exist where a remote use point creates essentially a second treatment facility or where the supply system might be shared by another health care professional such as other dentist, podiatrist, oral surgeon, or general medicine practitioner. The addition of another treatment facility requires incremental safety precautions.

A maximum of two single treatment facilities also approximates the limit with which a 85 m^3 (3000 ft^3) supply system can provide ([143 m^3 (5000 ft ^{3}) when liquid oxygen is used].

It is acknowledged that older user analgesia equipment has offered a nitrous oxide lockout device that requires a minimum of 3 L/min oxygen flow. However, a reasonable percentage of older equipment without this safety feature is in daily use. The storage and piping system is based upon the potential use, either initially or subsequently, of one of the older style analgesia equipment in one of the single treatment facilities. The quantity of 85 m^3 (3000 ft^3), or 143 m^3 (5000 ft^3) if liquid oxygen storage, is to be taken as the total combined storage of gases if there is more than one supply system in the single treatment facility.

A.18.3.11 This is in addition to other limited care facility requirements listed in Section 18.3 of NFPA 99.

Annex B Nature of Hazards

This annex is not a part of the requirements of this NFPA document but is included for informational purposes only.

B.2 Gas and Vacuum System Hazards.

B.2.1 Gas Systems. Oxygen and nitrous oxide, the gases normally used for relative analgesia and as components of general anesthesia, are strong oxidizing gases, and individually or as a mixture, support combustion quite readily.

Inhalation gases or vapors introduce fire, chemical, mechanical, and electrical hazards that are all interrelated. Any mixture of inhalation gases will support combustion. In an oxygen-enriched atmosphere, materials that are flammable and combustible in air ignite more easily and burn more vigorously. Combustible materials that could be found near patients who are to receive respiratory therapy include hair oils, oil-based lubricants, skin lotions, facial tissues, clothing, bed linen, tent canopies, rubber and plastic articles, gas supply and suction tubing, ether, alcohols, and acetone.

A particular hazard exists when oxygen or nitrous oxide equipment becomes contaminated with oil, grease, or other combustible materials. Such contaminants will ignite readily and burn more rapidly in the presence of high oxygen concentrations and make it easier to ignite less combustible materials with which they come in contact.

Any mixture of breathing gases used in respiratory therapy will support combustion. In an oxygen-enriched atmosphere, materials that are combustible and flammable in air ignite more easily and burn more vigorously. Materials not normally considered to be combustible can be so in an oxygen-enriched atmosphere.

An oxygen-enriched atmosphere normally exists in an oxygen tent, croup tent, incubator, and similar devices when supplemental oxygen is being employed in them. These devices are designed to maintain a concentration of oxygen higher than that found in the atmosphere.

A hazard exists if either oxygen or nitrous oxide leaks into a closed space, creating an oxygen-enriched atmosphere.

Oxygen-enriched atmospheres can exist in the immediate vicinity of all oxygen administration equipment. *(See Chapter 3 for the definition of Site of Intentional Expulsion.)*

The transfer of liquid oxygen from one container to another container can create an oxygen-enriched atmosphere within the vicinity of the containers. If oxygen is supplied by a container that stores the oxygen as a liquid, there will be a small amount of oxygen vented into the vicinity of the container after a period of nonuse of the equipment. Larger amounts of oxygen will be vented if the container is accidentally tipped over or placed on its side. This venting can create an oxygen-enriched atmosphere if the container is stored in a confined space.

A hazard exists if improper components are employed to connect equipment containing pressurized oxygen or nitrous oxide during respiratory therapy administration.

The occurrence of a fire requires the presence of combustible or flammable materials, an atmosphere of oxygen or other oxidizing agents, and a source of ignition. Combustible materials can be unavoidably present when oxygen is being administered, but flammable liquids and gases and ignition sources are avoidable.

Sources of ignition include not only the usual ones in ordinary atmospheres, but others that become significant hazards in oxygen-enriched atmospheres such as the following:

(1) Open flames, burning tobacco, and electric radiant heaters are sources of ignition.
(2) The discharge of a cardiac defibrillator can serve as a source of ignition.
(3) Arcing and excessive temperatures in electrical equipment are sources of ignition. Electrically powered oxygen apparatus and electrical equipment intended for use in an oxygen-enriched atmosphere are sources of ignition if electrical defects are present.
(4) Electrical equipment not conforming to the requirements of 8.5.2.4.1 of NFPA 99, which can include, but is not limited to, electric razors, electric bed controls, hair dryers, remote television controls, and telephone handsets, can create a source of ignition if introduced into an oxygen-enriched atmosphere.

Copyright National Fire Protection Association
Provided by IHS under license with NFPA
No reproduction or networking permitted without license from IHS
Not for Resale

(5) A static discharge having an energy content that can be generated under normal conditions in respiratory therapy will not constitute an ignition source as long as easily ignited substances (such as alcohols, acetone, oils, greases, or lotions) are not present.
(6) Rapid opening of cylinder valves can cause sudden increase in downstream gas pressure and temperature caused by the adiabatic heat of recompression with consequent ignition of combustible materials in contact with the hot gas downstream, including the valve seat. Sudden compression or recompression of a gas to high pressure can generate large increase in temperature [up to 1093°C (2000°F)] that can ignite any organic material present, including grease. *(See also* NFPA 53, *Recommended Practice on Materials, Equipment, and Systems Used in Oxygen-Enriched Atmospheres.)*

B.2.2 Medical–Surgical Vacuum Systems. There are potential fire and explosion hazards associated with medical gas central piping systems and medical–surgical vacuum systems. The various components are usually not independent isolated components, but are parts of a larger system dedicated to total patient care and safety.

Many of these components are covered by existing standards to minimize the fire, explosive, and patient safety hazard. The potential for mistaken interconnection with oxidizing gases and for under-capacity requiring extended overheated operation all present potential hazards or compound other hazardous conditions that should be properly addressed. Although the potential for these problems exists, the Piping Committee on Medical Gas and Vacuum Systems is unaware of the actual occurrence of any significant fire-related hazards with medical–surgical vacuum systems.

There are also potential hazards to patients in the unplanned shutdown or failure of the systems secondary to a fire and/or the inability of the system to provide adequate levels of performance under normal or emergency situations. There is also the potential for mistaken interconnection with pressurized nonflammable medical gas systems.

B.2.3 Waste Anesthetic Gas Disposal. There are potential fire and explosion hazards associated with the gases that are removed from the anesthesia machine by the WAGD system. These gases typically include oxygen, nitrous oxide, and halogenated anesthetics. There are also potential hazards to patients and staff resulting from exposure to these gases or from improper interface between the very low pressures in the breathing circuit and the high vacuum present in some WAGD systems. There is also the hazard of interconnection between the WAGD system and the other medical gas systems, and especially the medical–surgical vacuum system.

Any mixture of breathing gases used in respiratory therapy will support combustion. In an oxygen-enriched atmosphere, materials that are combustible and flammable in air ignite more easily and burn more vigorously. Materials not normally considered to be combustible can be so in an oxygen-enriched atmosphere.

B.2.3.1 Toxicity During Respiratory Therapy Administration. Chemical hazards can be associated with the presence of residual sterilant in high-pressure equipment.

Some breathing mixtures can decompose in contact with hot surfaces and produce toxic or flammable substances.

Smoldering combustion of flammable substances can occur with the production of significant amounts of toxic gases and fumes.

B.2.3.2 Safety (Mechanical Injury, Cross-Connection, and So Forth). A large amount of energy is stored in a cylinder of compressed gas. If the valve of a cylinder is struck (or strikes something else) hard enough to break off the valve, the contents of the cylinder could be discharged with sufficient force to impart dangerous reactive movement to the cylinder.

B.2.3.3 Mechanical Hazards During Respiratory Therapy Administration. Cylinders and containers can be heavy and bulky and can cause personal injury or property damage (including to the cylinder or container) if improperly handled. In cold climates, cylinders or containers stored outdoors or in unheated ventilated rooms can become extremely cold. A hazardous situation could develop if these cylinders or containers are heated.

Improper maintenance, handling, or assembly of equipment can result in personal injury, property damage, or fire.

A hazardous condition exists if cylinders or containers are improperly located so that they can become overheated or tipped over. If a container is tipped over or placed on its side, liquid oxygen could be spilled. The liquid can cause frostbite on contact with skin.

A hazardous condition exists if there is improper labeling of cylinders or containers or inattention to the manufacturer's label or instructions.

A hazardous condition exists if care is not exercised in making slip-on and other interchangeable connections when setting up equipment.

Safety features, including relief devices, valves, and connections, are provided in equipment and gas supply systems. Altering or circumventing these safety features by means of adapters creates a hazardous condition.

Extreme danger to life and property can result when compressed gases are mixed or transferred from one cylinder to another. A hazardous condition exists if devices, such as fixed or adjustable orifices and metering valves, are directly connected to cylinders or systems without a pressure-reducing regulator.

Hazardous conditions are created when pressure-reducing regulators or gauges are defective.

B.2.3.4 Manufactured Assemblies. Specific hazards associated with manufactured assemblies are the same as those listed above as well as additional hazards resulting from improper assembly, separation and leakage resulting from hidden semipermanent connections, improper connection resulting in cross-connection, and blockage and flow problems resulting from damage to hose, and so forth.

Annex C Additional Explanatory Notes to Chapters 1–20

This annex is not a part of the requirements of this NFPA document but is included for informational purposes only.

C.5 Additional Information on Chapter 5. Numbers in brackets refer to paragraphs in Chapter 5 of text.

C.5.1 Initial Testing of Nonflammable Medical Piped Gas Systems (Level 1 Systems).

C.5.1.1 [5.1.3.4.6.1] The pressure relief valve, set at 50 percent above normal line pressure, should be tested to assure proper function prior to use of the system for patient care.

--`,,`,,,-`-`,,`,,`,`,,`---

Copyright National Fire Protection Association
Provided by IHS under license with NFPA
No reproduction or networking permitted without license from IHS
Not for Resale

C.5.1.2 [5.1.3.5.2] The proper functioning of the safety valve, automatic drain, pressure gauge, and high-water-level sensor should be verified before the system is put into service.

C.5.1.3 [5.1.9.2.4; 5.1.3.4.10, 5.1.3.4.12, and 5.1.3.4.13] Changeover Warning Signal.

(1) Start a flow of gas from an outlet of the piping system.
(2) Close the shutoff valve or cylinder valves on the primary supply of the manifold *[see Figure A.5.1.3.4.9(a) and Figure A.5.1.3.4.9(b)]*, or the primary unit of the alternating bulk supply to simulate its depletion *(see Figure A.5.1.3.4.13)*. Changeover should be made to the secondary supply or the alternate bulk unit.
(3) Check main-line pressure gauge to ensure maintenance of the desired pressure.
(4) Check signal panels for activation of the proper changeover signal.
(5) Silence the audible signal; visual signal should remain.
(6) Open the valves closed in Step (2). Close the valve on the secondary supply or alternate bulk unit. When changeover back to original primary supply has occurred, reopen the valve. This will reinstate system to its original status.
(7) Check signal panels for deactivation of warning signals.
(8) Stop flow of gas from the piping system.

C.5.1.4 [5.1.9.2.4; 5.1.3.4.10, 5.1.3.4.12, and 5.1.3.4.13] Reserve-In-Use Warning Signal.

(1) Start a flow of gas from the piping system.
(2) Close the proper shutoff valves to simulate depletion of the operating supply. Reserve should begin to supply the piping system.
(3) Check the main-line pressure gauge. Pressure should remain at the desired level.
(4) Check the master signal panels to determine that the reserve-in-use signals have been activated.
(5) Silence the audible signal. Visual signal should remain.
(6) Open the shutoff valves closed in Step (2).
(7) Check master signal panels for deactivation of the warning signals.
(8) Stop the flow of gas from the piping system.

C.5.1.5 [5.1.9.2.4; 5.1.3.4.12, 5.1.3.4.13, 5.1.3.4.15, and 5.1.3.8.2.3] Reserve Supply Low.

(1) Start a flow of gas from the piping system.
(2) Close all operating supply shutoff valves (to use pressure from the reserve).
(3) Close the reserve supply shutoff valve or, if necessary, the reserve cylinder valves, depending on the exact location of the actuating switch (to reduce pressure on the actuating switch, simulating loss of reserve).
(4) Open the operating supply valves closed in Step (2) (so that only the "reserve low" signal should be activated).
(5) Check the master signal panels for activation of the proper signal.
(6) Silence the audible signal. Visual signal should remain.
(7) Open reserve supply valve or cylinder valves closed in Step (3).
(8) Check master signal panels for deactivation of the warning signals.
(9) Stop flow of gas from the piping system.

Note on Liquid Bulk Reserves. This type of reserve requires an actuating switch on the contents gauge and another actuating switch for the gas pressure being maintained in the reserve unit. Reduced contents or gas pressure in the reserve unit would indicate less than a day's supply in reserve.

Simulation of these conditions requires the assistance of the owner or the organization responsible for the operation and maintenance of the supply system as it will vary for different styles of storage units.

C.5.1.6 [5.1.9.2.4] High or Low Pressure in Piping System. Initial test of the area alarms covered in 5.1.9.3 can be done at the same time.

(1) Increase the pressure in the piping system to the high-pressure signal point (20 percent above normal pressure).
(2) Check all master signal panels (and area signals) to ensure that the properly labeled warning signal is activated; also check main-line pressure gauge and area gauges to ensure their function.
(3) Silence the audible signal. Visual signal should remain.
(4) Reduce piping system pressure to the normal. A flow from the system is required to lower the pressure and permit readjustment of the line regulator.
(5) Check all signal panels for deactivation of the signals.
(6) Close main-line shutoff valve.
(7) Continue the flow from the system until pressure is reduced to the low-pressure signal point (20 percent below normal).
(8) Check all signal panels for activation of the properly labeled warning signal; also check main-line gauge and area pressure gauges to ensure their function.
(9) Silence the audible signal. Visual signal should remain.
(10) Open main-line shutoff valve.
(11) Check main-line gauge for proper line pressure.
(12) Check all signal panels for deactivation of warning signals.

C.5.1.7 [5.1.9.3] This signal should be initially tested at the time the tests of C.5.1.6 are performed.

C.5.2 Retesting and Maintenance of Nonflammable Medical Piped Gas Systems (Level 1 Systems).

C.5.2.1 [5.1.3.4.10] These systems should be checked daily to assure that proper pressure is maintained and that the changeover signal has not malfunctioned. Periodic retesting of the routine changeover signal is not necessary as it will normally be activated on a regular basis.

C.5.2.2 [5.1.3.4.12] These systems should be checked daily to assure that proper pressure is maintained and that the changeover signal has not malfunctioned. Periodic retesting of the routine changeover signal is not required. Annual retesting of the operation of the reserve and activation of the reserve-in-use signal should be performed.

C.5.2.3 [5.1.3.4.12] If the system has an actuating switch and signal to monitor the contents of the reserve, it should be retested annually.

C.5.2.4 [5.1.3.4.13] Maintenance and periodic testing of the bulk system is the responsibility of the owner or the organization responsible for the operation and maintenance of that system.

The staff of the facility should check the supply system daily to ensure that medical gas is ordered when the contents gauge drops to the reorder level designated by the supplier. Piping system pressure gauges and other gauges designated by the supplier should be checked regularly, and gradual variation,

Copyright National Fire Protection Association
Provided by IHS under license with NFPA
No reproduction or networking permitted without license from IHS
Not for Resale

either increases or decreases, from the normal range should be reported to the supplier. These variations might indicate the need for corrective action.

Periodic testing of the master signal panel system, other than the routine changeover signal, should be performed. Request assistance from the supplier or detailed instruction if readjustment of bulk supply controls is necessary to complete these tests.

C.5.2.5 [5.1.8.2.3] The main-line pressure gauge should be checked daily to ensure the continued presence of the desired pressure. Variation, either increases or decreases, should be investigated and corrected.

C.5.2.6 [5.1.3.5.15] Quarterly rechecking of the location of the air intake should be made to ensure that it continues to be a satisfactory source for medical compressed air.

C.5.2.7 [5.1.3.5.14] Proper functioning of the pressure gauge and high-water-level sensor should be checked at least annually. Check the receiver drain daily to determine if an excessive quantity of condensed water has accumulated in the receiver.

C.5.2.8 [5.1.3.5] An important item required for operation of any medical compressed air supply system is a comprehensive preventive maintenance program. Worn parts on reciprocating compressors can cause high discharge temperatures resulting in an increase of contaminants in the discharge gas. Adsorber beds, if not changed at specified time intervals, can become saturated and lose their effectiveness. It is important that all components of the system be maintained in accordance with the manufacturers' recommendations. It is important that any instrumentation, including analytical equipment, be calibrated routinely and maintained in operating order. Proper functioning of the dew point sensor should be checked at least annually.

C.5.2.9 [5.1.9] When test buttons are provided with signal panels, activation of the audible and visual signals should be performed on a regular basis (monthly).

C.5.2.10 [5.1.9.2.4] Changeover Warning Signals. As these are routine signals that are activated and deactivated at frequent intervals, there is no need for retesting UNLESS they fail. If the reserve-in-use signal is activated because both units of the operating supply are depleted without the prior activation of the changeover signal, it should be repaired and retested.

C.5.2.11 [5.1.9.2.4] Reserve-In-Use Warning Signal. All components of this warning signal system should be retested annually in accordance with Steps (2) through (7) of the procedure given in C.5.1.4. Audible and visual signals should be tested periodically during the year (monthly).

C.5.2.12 [5.1.9.2.4] Reserve Supply Low (Down to an Average One-Day Supply) High-Pressure Cylinder or Liquid Reserve. All components of these signal warning systems should be retested annually in accordance with Steps (2) through (8) of the procedure given in C.5.1.5. If test buttons are provided, audible and visual signals should be periodically tested throughout the year (monthly).

C.5.2.13 [5.1.9.2.4] The medical compressed air system alarms in 5.1.3.5.14 should be checked at least annually.

C.5.2.14 [5.1.8.2.2(1)] This pressure gauge should be checked on a daily basis to ensure proper piping system pressure. A change, increase or decrease, if noted, can give evidence that maintenance is required on the line pressure regulator and could thus avoid a problem.

C.5.2.15 [5.1.9] Annual retesting of all components of warning systems, if it can be done without changing piping system line pressure, should be performed.

C.5.2.16 [5.1.9] If test buttons are provided, the retesting of audible and visual alarm indicators should be performed monthly.

C.5.2.17 [5.1.4] Shutoff valves should be periodically checked for external leakage by means of a test solution or other equally effective means of leak detection safe for use with oxygen.

C.5.2.18 [5.1.5] Station outlets should be periodically checked for leakage and flow. Instructions of the manufacturer should be followed in making this examination.

C.5.3 Oxygen Service–Related Documents. The following publications can be used for technical reference:

(1) ASTM G 63, *Standard Guide for Evaluating Nonmetallic Materials for Oxygen Service*
(2) ASTM G 88, *Standard Guide for Designing Systems for Oxygen Service*
(3) ASTM G 93, *Practice for Cleaning Methods and Cleanliness Levels for Material and Equipment Used in Oxygen-Enriched Environments*
(4) ASTM G 94, *Standard Guide for Evaluating Metals for Oxygen Service*

Annex F Sample Ordinance Adopting NFPA 99

This annex is not a part of the requirements of this NFPA document but is included for informational purposes only.

F.1 The following sample ordinance is provided to assist a jurisdiction in the adoption of this code and is not part of this code.

ORDINANCE NO. _____

An ordinance of the *[jurisdiction]* adopting the *[year]* edition of NFPA *[document number]*, *[complete document title]*, and documents listed in Chapter 2 of that *[code, standard]*; prescribing regulations governing conditions hazardous to life and property from fire or explosion; providing for the issuance of permits and collection of fees; repealing Ordinance No. _____ of the *[jurisdiction]* and all other ordinances and parts of ordinances in conflict therewith; providing a penalty; providing a severability clause; and providing for publication; and providing an effective date.

BE IT ORDAINED BY THE *[governing body]* OF THE *[jurisdiction]*:

SECTION 1 That the *[complete document title]* and documents adopted by Chapter 2, three (3) copies of which are on file and are open to inspection by the public in the office of the *[jurisdiction's keeper of records]* of the *[jurisdiction]*, are hereby adopted and incorporated into this ordinance as fully as if set out at length herein, and from the date on which this ordinance shall take effect, the provisions thereof shall be controlling within the limits of the *[jurisdiction]*. The same are hereby adopted as the *[code, standard]* of the *[jurisdiction]* for the purpose of prescribing regulations governing conditions hazardous to life and property from fire or explosion and providing for issuance of permits and collection of fees.

Copyright National Fire Protection Association
Provided by IHS under license with NFPA
No reproduction or networking permitted without license from IHS
Not for Resale

SECTION 2 Any person who shall violate any provision of this code or standard hereby adopted or fail to comply therewith; or who shall violate or fail to comply with any order made thereunder; or who shall build in violation of any detailed statement of specifications or plans submitted and approved thereunder; or fail to operate in accordance with any certificate or permit issued thereunder; and from which no appeal has been taken; or who shall fail to comply with such an order as affirmed or modified by a court of competent jurisdiction, within the time fixed herein, shall severally for each and every such violation and noncompliance, respectively, be guilty of a misdemeanor, punishable by a fine of not less than $ _____ nor more than $_____ or by imprisonment for not less than _____ days nor more than _____ days or by both such fine and imprisonment. The imposition of one penalty for any violation shall not excuse the violation or permit it to continue; and all such persons shall be required to correct or remedy such violations or defects within a reasonable time; and when not otherwise specified the application of the above penalty shall not be held to prevent the enforced removal of prohibited conditions. Each day that prohibited conditions are maintained shall constitute a separate offense.

SECTION 3 Additions, insertions, and changes — that the *[year]* edition of NFPA *[document number]*, *[complete document title]* is amended and changed in the following respects:

List Amendments

SECTION 4 That ordinance No. _____ of *[jurisdiction]* entitled *[fill in the title of the ordinance or ordinances in effect at the present time]* and all other ordinances or parts of ordinances in conflict herewith are hereby repealed.

SECTION 5 That if any section, subsection, sentence, clause, or phrase of this ordinance is, for any reason, held to be invalid or unconstitutional, such decision shall not affect the validity or constitutionality of the remaining portions of this ordinance. The *[governing body]* hereby declares that it would have passed this ordinance, and each section, subsection, clause, or phrase hereof, irrespective of the fact that any one or more sections, subsections, sentences, clauses, and phrases be declared unconstitutional.

SECTION 6 That the *[jurisdiction's keeper of records]* is hereby ordered and directed to cause this ordinance to be published. [NOTE: An additional provision may be required to direct the number of times the ordinance is to be published and to specify that it is to be in a newspaper in general circulation. Posting may also be required.]

SECTION 7 That this ordinance and the rules, regulations, provisions, requirements, orders, and matters established and adopted hereby shall take effect and be in full force and effect *[time period]* from and after the date of its final passage and adoption.

Annex G Informational References

G.1 Referenced Publications. The following documents or portions thereof are referenced within this standard for informational purposes only and are thus not part of the requirements of this document unless also listed in Chapter 2.

G.1.1 NFPA Publications. National Fire Protection Association, 1 Batterymarch Park, Quincy, MA 02169-7471.

NFPA 53, *Recommended Practice on Materials, Equipment, and Systems Used in Oxygen-Enriched Atmospheres*, 2004 edition.

NFPA 70, *National Electrical Code®*, 2005 edition.

NFPA 80, *Standard for Fire Doors and Fire Windows*, 1999 edition.

NFPA *101®*, *Life Safety Code®*, 2003 edition.

NFPA 220, *Standard on Types of Building Construction*, 1999 edition.

G.1.2 Other Publications. The following publications are available from the addresses listed.

G.1.2.1 ASME Publication. American Society of Mechanical Engineers, Three Park Avenue, New York, NY 10016–5990.

ASME *Boiler and Pressure Vessel Code*, Section IX, Welding and Brazing Qualifications, 1998.

G.1.2.2 ASTM Publications. American Society for Testing and Materials, 100 Barr Harbor Drive, West Conshohocken, PA 19428.

ASTM D 56, *Standard Test Method for Flash Point by Tag Closed Tester* (ANSI), 1998.

ASTM D 93, *Standard Test Methods for Flash Point by Pensky-Martens Closed Cup Tester* (ANSI), 1999.

ASTM D 2240, *Standard Test Method for Rubber Property — Durometer Hardness*, 1997.

ASTM G 63, *Standard Guide for Evaluating Nonmetallic Materials for Oxygen Service*, 1998.

ASTM G 88, *Standard Guide for Designing Systems for Oxygen Service*, 1990.

ASTM G 93, *Standard Practice for Cleaning Methods and Cleanliness Levels for Material and Equipment Used in Oxygen-Enriched Environments*, 1996.

ASTM G 94, *Standard Guide for Evaluating Metals for Oxygen Service*, 1992.

G.1.2.3 CGA Publications. Compressed Gas Association, Inc., 4221 Walney Road, 5th Floor, Chantilly, VA 20151–2923.

CGA E-10, *Maintenance of Medical Gas and Vacuum Systems in Health Care Facilities*, 2001.

CGA G-8.1, *Standard for Nitrous Oxide Systems at Consumer Sites*, 1990.

CGA P-1, *Safe Handling of Compressed Gases in Containers*, 1991.

CGA P-2, *Characteristics and Safe Handling of Medical Gases*, 1996.

CGA V-1, *Standard for Compressed Gas Cylinder Valve Outlet and Inlet Connections* (ANSI B57.1), 1994.

G.1.2.4 U.S. Government Publications. U.S. Government Printing Office, Washington, DC 20402.

Code of Federal Regulations, Title 49.

Title 29, Code of Federal Regulations, Part 1910, Subpart 1030, *Bloodborne Pathogens*.

Title 29, Code of Federal Regulations, Part 910, Subpart 1910, *Occupational Exposures to Chemical Laboratories*.

Title 49, Code of Federal Regulations, Parts 171 through 190 (U.S. Dept. of Transportation, Specifications for Transportation of Explosives & Dangerous Articles). (In Canada, the regulations of the Board of Transport Commissioners, Union Station, Ottawa, Canada, apply.)

Commercial Standard 223-59, *Casters, Wheels, and Glides for Hospital Equipment*.

National Research Council Publication 1132, *Diesel Engines for Use with Generators to Supply Emergency and Short Term Electric Power*. (Also available as Order No. O.P.52870 from University Microfilms, P.O. Box 1366, Ann Arbor, MI 48106.)

G.1.2.5 U.S. Pharmacopeia Publication. U.S. Pharmacopeia, 12601 Twinbrook Parkway, Rockville, MD 20852.

USP *Standard for Compressed Air*, Document No. XXII/NFXVII.

Copyright National Fire Protection Association
Provided by IHS under license with NFPA
No reproduction or networking permitted without license from IHS
Not for Resale

Index

© 2005 National Fire Protection Association. All Rights Reserved.

The copyright in this index is separate and distinct from the copyright in the document that it indexes. The licensing provisions set forth for the document are not applicable to this index. This index may not be reproduced in whole or in part by any means without the express written permission of NFPA.

-A-

Absolute atmosphere (definition) 3.3.14.2
Absolute pressure (definition) 3.3.148.1
ACFM (actual cubic feet per minute)(definition) 3.3.1
Active electrode .....*see* Electrode, active
Adiabatic heating
  Definition 3.3.2
Aerosols
  Definition 3.3.3
Aftercoolers 5.1.3.5.5, 5.1.3.5.11.3, 5.1.3.5.11.8
Air
  Compressors .*see also* Compressed air system (Level 3); Medical air compressors
    Hyperbaric chambers 20.2.4.2
  Medical .....*see* Medical air
Alarm systems
  Area ..... 5.1.9, 5.1.12.3.5.3, 5.1.14.8.3, A.5.1.9, C.5.1.3, C.5.2.9 to C.5.2.13, C.5.2.15, C.5.2.16
    Definition 3.3.4.1
  Changeover signals 5.1.9.2.4, C.5.1.3, C.5.2.10, C.5.2.13
  Labeling 5.1.11.4
  Level 1 ..... 5.1.3.4.8, 5.1.9, A.5.1.9, C.5.1.3, C.5.2.9 to C.5.2.13, C.5.2.15, C.5.2.16; *see also subheads:* Area, Master
    Instrument air 5.1.3.8.10
    Labeling 5.1.11.4
    Medical air compressors 5.1.3.5.10, 5.1.3.5.14, A.5.1.3.5.10
    Medical–surgical vacuum system 5.1.3.6.4, 5.1.3.6.8
    Support gases 5.1.14.8
    Tests 5.1.12.3.5
    Waste anesthetic gas disposal (WAGD) 5.1.3.7.4
  Level 2 ..... 5.2.9
  Level 3 ..... 5.3.9
    Definition 3.3.4.2
    Tests 5.3.12.3.4, 5.3.13.7.5
  Local 5.1.3.4.8, 5.1.3.5.10, 5.1.3.5.14, 5.1.3.6.4, 5.1.9.1, 5.1.9.5, 5.1.14.8.3, A.5.1.3.5.10, A.5.1.9.5
    Definition 3.3.4.3
  Master ..... 5.1.9, 5.1.12.3.5.2, 5.1.14.8.2, A.5.1.9, C.5.1.3, C.5.2.9 to C.5.2.13, C.5.2.15, C.5.2.16
    Computer systems as substitutes for 5.1.9.4
    Definition 3.3.4.4
  Medical air compressors 5.1.3.5.14, A.5.1.3.5.10
  Medical–surgical vacuum system 5.1.3.6.8
Alternate power sources
  Definition 3.3.5
Ambient atmosphere (definition) 3.3.14.1
Ambient pressure (definition) 3.3.148.2
Ambulatory health care centers ...*see also* Other health care facilities
  Definition 3.3.6
Ampacity (definition) 3.3.7
Analgesia, relative (definition) 3.3.158
Anesthetics .....*see also specific gases*
  Definition 3.3.8
  Flammable 5.1.13.1.1, 5.3.13.5.1
  Waste .....*see also* Waste anesthetic gas disposal (WAGD) systems
Anesthetizing locations .....*see also* Hospitals
  Definition 3.3.9, A.3.3.9
  Gases .... 13.4.1.2.7; *see also* Waste anesthetic gas disposal (WAGD) systems
  Ventilation 6.6.1
Anoxia (definition) 3.3.10
Apparatus .....*see* Equipment
Appliances .....*see also* Electrical equipment; Equipment
  Definition 3.3.11
  Double-insulated
    Definition 3.3.36, A.3.3.36
Application of standard 1.3
Applicator (definition) 3.3.12, A.3.3.12
Approved (definition) 3.2.1, A.3.2.1
Area of administration (definition) 3.3.13
Atmosphere
  Absolute (definition) 3.3.14.2
  Ambient (definition) 3.3.14.1
  Chamber (definition) 3.3.14.4
  Definition 3.3.14, A.3.3.14
  Of increased burning rate (definition) ..... 3.3.14.3, A.3.3.14.3, Fig. A.3.3.14.3
  Oxygen-enriched .....*see* Oxygen-enriched atmosphere
Attachment plugs .....*see* Plugs (attachment plugs, caps)
Authority having jurisdiction
  Definition 3.2.2, A.3.2.2
Automatic (definition) 3.3.15

-B-

Bends (definition) ..... 3.3.16, A.3.3.16; *see also* Decompression sickness
Birthing centers ..... Chap. 21
Branch circuits
  Definition 3.3.17
Branch (lateral) lines, piping
  Definition 3.3.145.1
  Takeoffs 5.1.10.10.6, 5.3.10.10.9
Brazing 5.1.10.5, 5.1.10.10.12, 5.3.10.10.1.3, 5.3.10.10.15
Bulk systems ..... 5.1.3.5.1(1), A.5.1.3.3
  Cryogenic liquids 5.1.3.4.13, 5.1.9.2.4, A.5.1.3.4.13, C.5.2.4, C.5.2.13
  Definition 3.3.19
  Nitrous oxide (definition) 3.3.19.1
  Oxygen (definition) 3.3.19.2

-C-

Cannula, nasal (definition) 3.3.114
Carbon dioxide
  Designation colors/operating pressures ..... Table 5.1.11
  Supply systems 5.1.3.3.1.8, 5.1.3.4.2, A.5.1.3.4.2
Cardiac defibrillators .....*see* Defibrillators
Catheters
  Nasal (definition) 3.3.117
Central supply system, Level 1
  Components ..... 5.1.3.4, A.5.1.3.4, C.5.2.1 to C.5.2.4
  Headers 5.1.3.4.9, A.5.1.3.4.9
  Identification and labeling 5.1.3.1, A.5.1.3.1.1
  Locations 5.1.3.3, A.5.1.3.3
  Operations 5.1.3.2
  Reserves
    Bulk cryogenic liquid systems 5.1.3.4.13.6
    In-building emergency reserves 5.1.3.4.15
    Warning signals 5.1.9.2.4, C.5.1.4, C.5.1.5, C.5.2.11, C.5.2.12, C.5.2.13

Copyright National Fire Protection Association
Provided by IHS under license with NFPA
No reproduction or networking permitted without license from IHS
Not for Resale

Central supply system, Level 2 ..... 5.2.3.1 to 5.2.3.4
Chamber atmosphere (definition) 3.3.14.4
Chemicals .....*see* Hazardous chemicals
Circuits
Branch .....*see* Branch circuits
Clinics .....*see* Other health care facilities
Code (definition) 3.2.3, A.3.2.3
Cold room (definition) ..... 3.3.20; *see also* Refrigerating equipment
Combustible (definition) 3.3.21
Combustible liquids .....*see* Flammable and combustible liquids
Combustible materials .....*see* Fire hazard
Combustion (definition) 3.3.23, A.3.3.23
Combustion products
Definition 3.3.24
Communication systems .....*see also* Alarm systems
Compressed air system (Level 3) ... 5.3.3.3.2.2, 5.3.3.3.7, 5.3.3.5.3; *see also* Instrument air; Medical air compressors
Definition 3.3.93, A.3.3.93
Conductive surfaces, exposed .....*see* Exposed conductive surfaces
Connections, valves for future 5.1.4.10
Connectors, flexible 5.1.10.10.7, 5.3.3.4.3, 5.3.10.10.11
Construction
Central supply systems and storage, gas 5.1.3.3.2, A.5.1.3.3.2
Hyperbaric facilities 20.2, A.20.2
Containers .....*see also* Cylinders
Connections 5.3.13.2
Definition 3.3.25
Handling 5.1.3.2.2
Labeling ... 5.1.3.1.1 to 5.1.3.1.7, 5.3.3.1.1 to 5.3.3.1.4, A.5.1.3.1.1
Storage 5.3.13.4
Critical branch
Definition 3.3.26
Critical care areas .....*see also* Patient care areas
Definition 3.3.138.1, A.3.3.138.1
Critical equipment (definition) 3.3.28
Critical system
Definition 3.3.29
Cross-connection test 5.1.12.2.4, 5.1.12.3.3, 5.3.12.2.5, 5.3.12.3.3, 5.3.12.4.4, B.2.3.2
Cryogenic liquids ..... 5.1.3.2.9, 5.1.3.2.10, 5.1.3.3.1.1, 5.1.3.3.1.2(3), 5.1.3.4(3)
Bulk systems ... 5.1.3.4.13, 5.1.9.2.4, A.5.1.3.4.13, C.5.2.4, C.5.2.13
Manifolds, cylinder ... 5.1.3.4.12, Fig. A.5.1.3.4.12, C.5.2.2, C.5.2.3
Cylinders
Connections 5.3.3.4.1, 5.3.13.2
Definition 3.3.30
Handling ..... 5.1.3.2.2, 5.1.3.2.7, 5.1.3.2.8, 5.1.3.2.10 to 5.3.2.12, 5.1.3.3.1.7, 5.3.3.2.7 to 5.3.3.2.11, B.2.1, B.2.3.2,
Headers 5.1.3.4.9, A.5.1.3.4.9
Labeling ..... 5.1.3.1.1 to 5.1.3.1.7, 5.3.3.1.1 to 5.3.3.1.4
Management 5.3.3.2, 5.3.3.3.1, 5.3.13.1, 5.3.13.2, 5.3.13.4, A.5.3.3.2
Manifolds for .....*see* Manifolds
Reserves 5.1.9.2.4, 5.3.3.5.8, A.5.3.3.5.8, C.5.1.4, C.5.1.5, C.5.2.11, C.5.2.12, C.5.2.13
Storage ..... 5.1.3.2.3 to 5.1.3.2.7, 5.1.3.2.10 to 5.3.2.1.13, 5.1.3.3.1.7, 5.1.3.3.4, 5.3.3.2.2 to 5.3.3.2.12, 5.3.3.3.1, 5.3.13.4
Supply systems ..... 5.1.3.5.1(1), 5.3.3.4.4, 5.3.3.4.5, A.5.3.3.4.4
Gas supply, shutting off 5.3.13.5.4

-D-

Decompression sickness
Definition 3.3.31
Defibrillators B.2.1
Definitions ..... Chap. 3
Dental office .....*see* Medical/dental office
Detonation (definition) 3.3.32
Direct electrical pathway to heart
Definition 3.3.33, A.3.3.33
Disasters .....*see also* Emergency management
Causes A.3.3.34
Definition 3.3.34, A.3.3.34
Dispersive electrode
Definition 3.3.38.3, A.3.3.38.3
D.I.S.S. connector (definition) 3.3.35
Documentation
Gas systems, records of 5.3.13.7
Vacuum systems, records of 5.3.13.7
Double-insulated appliances
Definition 3.3.36, A.3.3.36
Drains, Level 3 vacuum source 5.3.3.6.3, A.5.3.3.6.3

-E-

Electrical attachment plugs .....*see* Plugs (attachment plugs, caps)
Electrical currents .....*see* Electrical systems
Electrical equipment
Hazards of B.2.1
Life support
Definition 3.3.37
Patient-care-related appliances
Definition 3.3.139
Electrical systems .....*see also* Essential electrical systems
Medical air systems 5.1.3.5.12
Medical–surgical vacuum supply systems 5.1.3.6.6
Sources of power
Alternate .....*see* Alternate power sources
Instrument air supply systems 5.1.3.8.11
Waste anesthetic gas disposal (WAGD) systems 5.1.3.7.5
Electrode
Active (definition) 3.3.38.1
Bipolar (definition) 3.3.38.2
Definition 3.3.38
Dispersive
Definition 3.3.38.3, A.3.3.38.3
Emergency management
Definition 3.3.39
Emergency oxygen supply connection 5.1.3.4.14, A.5.1.3.4.14
Definition 3.3.40
Emergency procedures .....*see* Emergency management
Emergency systems
Definition 3.3.41
Employees
Medical gas and vacuum system installers 5.1.10.10.11, 5.1.10.10.12, 5.1.12.2, 5.3.10.10.1
Enclosures
Gas systems 5.3.3.3.6
Endotracheal tube
Definition 3.3.178.1, A.3.3.178.1
Environmental systems ..... Chap. 6
Equipment .....*see also* Electrical equipment
Critical (definition) 3.3.28
Hyperbaric 20.2
Equipment grounding bus (definition) 3.3.42
Equipment system (definition) 3.3.43
Equivalency to standard 1.4
Essential electrical systems
Definition 3.3.44
Evacuation, waste gas .....*see* Waste anesthetic gas disposal (WAGD) systems
Exhaust systems .....*see also* Ventilation
Medical–surgical vacuum source . 5.1.3.6.7, 5.3.3.6.4, A.5.3.3.6.4.8
Waste anesthetic gas disposal (WAGD) systems 5.1.3.7.6
Explosion hazard
Laboratories ..... Chap. 11
Exposed conductive surfaces
Definition 3.3.46
Extension cords .....*see also* Power cords

Copyright National Fire Protection Association
Provided by IHS under license with NFPA
No reproduction or networking permitted without license from IHS
Not for Resale

-F-

Failure
Definition 3.3.47, A.3.3.47
Fault currents (definition) 3.3.48
Fault hazard current (definition) 3.3.66.1
Feeder (definition) 3.3.49
Filters, air A.5.1.3.5.1
Instrument air 5.1.3.8.7
Medical air 5.1.3.5.8, 5.1.3.5.11.5, 5.1.3.5.11.6, 5.1.3.5.11.9, A.5.1.3.5.11.6
Fire alarm system .....*see* Alarm systems
Fire hazard
Gas systems 5.1.2, 5.3.2, B.2.1
Laboratories ..... Chap. 11
Oxygen-enriched atmosphere ...*see* Oxygen-enriched atmosphere
Flame resistant (definition) 3.3.50, A.3.3.50
Flammable (definition) 3.3.51, A.3.3.51
Flammable and combustible liquids .....*see also* Hazardous materials
Definition 3.3.22, 3.3.53, A.3.3.22
Flammable gases .....*see also* Cylinders; Gases
Definition 3.3.52
Storage 20.3.4.1
Flammable liquids .....*see* Flammable and combustible liquids
Flash point
Definition 3.3.54
Flexible connectors 5.1.10.10.7, 5.3.3.4.3, 5.3.10.10.11
Flow-control valve
Definition 3.3.55
Flowmeter
Definition 3.3.56
Pressure compensated (definition) 3.3.56.1
Formulas 1.5
Freestanding birthing centers ..... Chap. 21
Definition 3.3.57
Frequency
Definition 3.3.58, A.3.3.58
Fume hoods
Definition 3.3.59, A.3.3.59

-G-

Gas cylinders .....*see* Cylinders
Gas equipment
Level 3 gas-powered devices, final testing of 5.3.12.4
Source 5.3.12.4.8
Gases .....*see also specific gases*
Anesthetizing locations .... 13.4.1.2.7; *see also* Waste anesthetic gas disposal (WAGD) systems
Flammable .....*see* Flammable gases
Medical .....*see* Medical gases
Nonflammable .....*see also* Medical gases
Oxidizing (definition) 3.3.130, A.3.3.130
Gas-powered systems 5.3.3.5, 5.3.10.1.2, A.5.3.3.5
Definition 3.3.60
Gas systems .....*see* Medical gas systems
General care areas .....*see also* Patient care areas
Definition 3.3.138.2, A.3.3.138.2
Governing body
Definition 3.3.62
Ground-fault circuit interrupters (GFCIs)
Definition 3.3.63
Grounding .....*see also* Grounding systems
Piping system 5.1.13.1.3, 5.3.13.5.2
Quiet grounds .....*see* Quiet grounds
Grounding point
Patient equipment (definition) 3.3.141
Reference
Definition 3.3.156
Grounding systems
Definition 3.3.65, A.3.3.65
Guide (definition) 3.2.4

-H-

Halogenated agents 13.3.5.2, 14.3.5.2
Hazard current
Definition 3.3.66
Fault (definition) 3.3.66.1
Monitor (definition) 3.3.66.2
Total (definition) 3.3.66.3
Hazardous chemicals B.2.3.1
Definition 3.3.67, A.3.3.67
Hazardous materials .....*see also* Hazardous chemicals
Storage, hyperbaric facilities 20.3.4.1
Hazards .....*see* specific type such as Electrical hazards
Headers
Central supply system 5.1.3.4.9, A.5.1.3.4.9
Instrument air standby 5.1.3.8.5, A.5.1.3.8.5
Health care facilities (definition) 3.3.68, A.3.3.68
Heart, direct electrical pathway to .....*see* Direct electrical pathway to heart
Heating
Adiabatic .....*see* Adiabatic heating
High pressure .....*see* Pressure, high
Home care
Definition 3.3.69
Hoods
Fume .....*see* Fume hoods
Oxygen (definition) 3.3.134
Hose 5.1.10.10.7, 5.3.10.10.11
Hospital-based (definition) 3.3.71
Hospitals ..... Chap. 13
Definition 3.3.70
Gas system ..... 13.3.5, A.13.3.5.1(3)(c)
Governing body
Definition 3.3.62
Vacuum systems ..... 13.3.5, A.13.3.5.1(3)(c)
Humidification
Anesthetizing locations 6.6.1
Humidifiers
Definition 3.3.72
Hyperbaric (definition) 3.3.73
Hyperbaric facilities ..... Chap. 20
Administration and maintenance 20.3
Noncombustible (definition) 3.3.123
Safe practices 20.3, A.20.3
Ventilation of chambers 20.2.4
Hyperbaric oxygenation (definition) 3.3.74
Hypobaric
Definition 3.3.75
Noncombustible (definition) 3.3.124
Hypoxia (definition) 3.3.76

-I-

Identification .....*see* Labeling and identification
Ignition sources .....*see also* Explosion hazard; Fire hazard
Oxygen-enriched atmospheres B.2.1
Immediate restoration of service (definition) 3.3.77
Impedance
Definition 3.3.78, A.3.3.78
Incident command system (ICS)
Definition 3.3.79
Inhalation anesthetics, use of .....*see also* Anesthetics; Anesthetizing locations
Hazards B.2.1
In-line valves 5.1.4.9
Instrument air
Definition 3.3.80
Supply systems ..... 5.1.3.8, Table 5.1.11, Fig. A.5.1.3.8; *see also* Compressed air system (Level 3)
Alarms 5.1.9.5, A.5.1.9.5
Level 2 piped gas and vacuum systems 5.2.3.8
Intentional expulsion, site of .....*see* Site of intentional expulsion

Copyright National Fire Protection Association
Provided by IHS under license with NFPA
No reproduction or networking permitted without license from IHS
Not for Resale

Intermittent positive-pressure breathing (IPPB) A.5.1.3.5.2
Definition 3.3.81, C.9.2.15
Intrinsically safe
Definition 3.3.82, A.3.3.82
Invasive procedure (definition) 3.3.83
IPPB .....*see* Intermittent positive-pressure breathing (IPPB)
Isolated patient leads
Definition 3.3.84
Isolated power systems
Definition 3.3.85, A.3.3.85
Isolation transformer
Definition 3.3.86

-J-

Joints
Brazed 5.1.10.5, 5.1.10.10.12, 5.3.10.7, 5.3.10.10.15, A.5.1.10.5.5, A.5.3.10.7.5
Prohibited 5.1.10.8
Soldered 5.3.10.5
Solvent-cemented 5.3.10.6
Special 5.3.10.8, 5.3.10.9
Special fittings 5.1.10.7
Threaded 5.1.10.4, 5.3.10.4
In WAGD networks 5.1.10.9
Welded 5.1.10.6, A.5.1.10.6.5

-L-

Labeled (definition) 3.2.5
Labeling and identification
Cylinders and containers ..... 5.1.3.1, 5.3.3.1.1 to 5.3.3.1.4, A.5.1.3.1.1
Gas equipment 5.3.12.4.7
Gas/vacuum systems 5.1.11.1, 5.1.13.2, 5.2.11, 5.3.3.1, 5.3.11, 5.3.13.6
Alarm panels 5.1.11.4
Shutoff valves 5.1.11.2
Station outlets and inlets 5.1.11.3
Verification of 5.1.12.3.13, 5.3.12.3.11, 5.3.12.4.7
Support gas 5.1.14.10
Laboratories ..... Chap. 11
Definitions 3.3.87, A.3.3.87
Gas systems, piped 11.11, A.11.11.2.1
Hospital 13.3.11, A.13.3.11
Limited care facilities 18.3.11, A.18.3.11
Nursing homes 17.3.11, A.17.3.11
Other health care facilities 14.3.11
Laboratory hoods .....*see* Hoods
Laboratory work area (definition) 3.3.88, A.3.3.88
Leakage current .....
Definition 3.3.89
Level 3 compressed air system .....*see* Compressed air system (Level 3)
Level 1 medical piped gas and vacuum systems ..... 5.1, A.5.1; *see also* Vacuum systems
Alarms .....*see* Alarm systems
Definition 3.3.90
Designation colors/operating pressures ..... Table 5.1.11
Distribution 5.1.10, A.5.1.10
Hazards, nature of 5.1.2
Labeling and identification 5.1.11
Maintenance C.5.2
Manufactured assemblies 5.1.6, A.5.1.6
Operation and management 5.1.13, A.5.1.13
Other health care facilities 14.3.5.1
Performance criteria 5.1.12
Pressure and vacuum indicators 5.1.8, C.5.2.5
Retesting C.5.2
Sources ..... 5.1.3, A.5.1.3; *see also* Central supply system, Level 1
Instrument air supply systems ..... 5.1.3.8, Fig. A.5.1.3.8
Medical air supply systems 5.1.3.5, A.5.1.3.5, C.5.1.2, C.5.2.8
Medical–surgical vacuum supply systems 5.1.3.6, A.5.1.3.6
Reserves
Bulk cryogenic liquid systems 5.1.3.4.13.6, A.5.1.3.4.13, C.5.2.4
In-building emergency reserves 5.1.3.4.15
Warning signals 5.1.9.2.4, C.5.1.4, C.5.1.5, C.5.2.11, C.5.2.12, C.5.2.13
Verification of equipment 5.1.12.3.14
Waste anesthetic gas disposal (WAGD) 5.1.3.7, A.5.1.3.7
Station outlets/inlets 5.1.5, 5.1.11.3, A.5.1.5, C.5.2.18
Support gases 5.1.14
Surface-mounted medical gas rails 5.1.7, A.5.1.7
Valves ..... 5.1.4, 5.1.12.3.4, A.5.1.4, Fig. A.5.1.4, C.5.2.17
Level 2 medical piped gas and vacuum systems 5.2, A.5.2.1
Definition 3.3.92
Other health care facilities 14.3.5.1
Level 3 piped gas systems 5.3, A.5.3
Alarms .....*see* Alarm systems
Definition 3.3.94
Distribution 5.3.10, A.5.3.10.7.5, A.5.3.10.10.3
Gas-powered devices
Piping 5.3.10.1.2
Supply systems 5.3.3.5, A.5.3.3.5
Hazards, nature of 5.3.2
Labeling and identification 5.3.11, 5.3.12.3.11
Operation and management 5.3.3.2, 5.3.13, A.5.3.3.2
Other health care facilities ..... 14.3.5.1(3), A.14.3.5.1(3)(c)
Performance criteria ..... 5.3.12, A.5.3.12.3.10(3)(b)
Sources 5.3.3
Gas-powered devices supply systems 5.3.3.5
Identification and labeling 5.3.3.1
Locations 5.3.3.3.2
Medical gas supply systems 5.3.3.4, A.5.3.3.4.4
Operations 5.3.3.2, A.5.3.3.2
Reserves 5.1.9.2.4, 5.3.3.5.8, A.5.3.3.5.8, C.5.1.4, C.5.1.5, C.5.2.11, C.5.2.12, C.5.2.13
Systems 5.3.3.3
Vacuum sources 5.3.3.6, A.5.3.3.6
Verification of equipment 5.3.12.3.12
Station and service outlets/inlets 5.3.5, 5.3.11.3, A.5.3.5
Valves 5.3.4, A.5.3.4
Warning systems 5.3.9
Level 1 vacuum systems .....*see* Vacuum systems
Level 3 vacuum systems .....*see* Vacuum systems
Life safety branch
Definition 3.3.96
Life support equipment, electrical
Definition 3.3.37
Limited care facility ..... Chap. 18
Definition 3.3.97
Limited-combustible material (definition) 3.3.98, A.3.3.98
Line isolation monitor
Definition 3.3.99
Liquids
Definition 3.3.100, A.3.3.100
Flammable and combustible .....*see* Flammable and combustible liquids
Listed (definition) 3.2.6, A.3.2.6
Local signal (definition) 3.3.101, A.3.3.101
Lubricants 20.3.2.4

-M-

mA (definition) 3.3.102
Main lines, piping
Definition 3.3.145.2
Valves 5.1.4.5, 5.1.11.2.4, A.5.1.4.5
Manifolds ..... 5.1.3.3.1.1, 5.1.3.3.1.2, 5.1.3.4(1), 5.1.3.4(2), 5.3.13.1, 9.7.2
Cryogenic liquid cylinders ..... 5.1.3.4.12, Fig. A.5.1.3.4.12, C.5.2.2, C.5.2.3
Cylinders without reserve supply, for ..... 5.1.3.4.10, Fig. A.5.1.3.4.10, C.5.2.1

--`,,`,,-`-`,,`,,`,`,,`---

Copyright National Fire Protection Association
Provided by IHS under license with NFPA
No reproduction or networking permitted without license from IHS
Not for Resale

Cylinders with reserve supply, for 5.1.3.4.11
Definition 3.3.103
Manufactured assemblies B.2.3.4
Definition 3.3.104, A.3.3.104
Level 1 piped gas and vacuum systems 5.1.6, A.5.1.6
Support gases 5.1.14.6
Level 2 piped gas and vacuum systems 5.2.6
Manufacturer's requirements
Piping system installation 5.1.10.10.9, 5.3.10.10.13
Mask
Definition 3.3.105
Materials ..... Chap. 7
Measurement, units of 1.5, A.1.5.1
Mechanical hazards
Respiratory therapy administration, during B.2.3.3
Waste anesthetic gas disposal B.2.3.2, B.2.3.3
Medical air
Alarms 5.1.3.5.10, 5.1.3.5.14, A.5.1.3.5.10
Area ..... 5.1.9.3, A.5.1.9.3.4(1), Table A.5.1.9.3, C.5.1.7
Master ..... 5.1.9.2.4, C.5.1.4 to C.5.1.6, C.5.2.10 to C.5.2.13
Definition 3.3.106, A.3.3.106
Designation colors/operating pressures ..... Table 5.1.11
Dryers 5.1.3.5.7, 5.1.3.5.11.5, 5.1.3.5.11.6, 5.1.3.5.11.9, A.5.1.3.5.11.6
Filters 5.1.3.5.8, 5.1.3.5.11.5, 5.1.3.5.11.6, 5.1.3.5.11.9, A.5.1.3.5.11.6
Level 1 supply systems 5.1.3.5, A.5.1.3.5, C.5.1.2, C.5.2.8
Level 2 supply systems 5.2.3.5
Purity test 5.1.12.3.12
Quality monitoring 5.1.3.5.15, C.5.2.6
Receivers 5.1.3.5.6, 5.1.3.5.11.4, 5.3.3.5.4, A.5.1.3.5.11.4
Regulators 5.1.3.5.9, 5.1.3.5.11.5, 5.1.3.5.11.6, 5.1.3.5.11.9, A.5.1.3.5.11.6
Medical air compressors ..... 5.1.3.4(4), 5.1.3.5.1, 5.1.3.5.3, 5.1.3.5.4, 5.1.3.5.8.1, 5.1.3.5.11.2, A.5.1.3.5.1 to A.5.1.3.5.4.1, C.5.1.2; *see also* Compressed air system (Level 3)
Alarms 5.1.9.5, A.5.1.9.5
Definition 3.3.107
Electrical power and control 5.1.3.5.12
Filters A.5.1.3.5.1
Instrument 5.1.3.8.3.3, 5.1.3.8.4
Intake 5.1.3.5.13, 5.1.3.8.6, 5.3.3.5.7, 20.2.4.2, A.5.1.3.5.1, A.5.3.3.5.7
Multiple pressures ..... 5.1.3.7(1)
Tests 5.1.12.3.14.3
Medical/dental office ..... *see also* Other health care facilities
Definition 3.3.108, A.3.3.108
Medical gases ..... *see also specific gases*
Concentration test ..... 5.1.12.3.11, A.5.1.12.3.11(3)
Definition 3.3.109
Prohibited uses 5.1.3.4.2, A.5.1.3.4.2
Medical gas rails (MGRs) ..... *see* Surface-mounted medical gas rail systems
Medical gas systems ..... Chap. 5, 13.4.1.2.7.2; *see also* Cylinders; Gas equipment; Medical gases; Vacuum systems; Waste anesthetic gas disposal (WAGD) systems
Birthing centers 21.3.5
Changes in system use 5.1.10.10.10, 5.3.10.10.14
Cross-connection ..... *See* Cross-connection test
Definition 3.3.110
Distribution, piped ..... *see* Piped distribution system
Hazards of B.2
Hospital ..... 13.3.5, A.13.3.5.1(3)(c)
Installers, qualification of 5.1.10.10.11, 5.1.10.10.12, 5.3.10.10.1
Labeling 5.1.13.2, 5.3.13.6
Level 1 ..... *see* Level 1 medical piped gas and vacuum systems
Level 2 ..... 5.2, A.5.2.1
Definition 3.3.92
Level 3 ..... *see* Level 3 piped gas systems
Limited care facilities ..... 18.3.5, A.18.3.5.1(3)(c)
Maintenance 5.3.13.7
Manufactured assemblies to use with ..... *see* Manufactured assemblies
Nitrous oxide ..... *see* Nitrous oxide
Nursing homes ..... 17.3.5, A.17.3.5.1(3)(c)
Other health care facilities ..... 14.3.5, A.14.3.5.1(3)(c)
Record keeping 5.3.13.7
Special precautions 5.1.13.1, 5.3.10.10.10, 5.3.13.5
Standard designation colors and operating pressures ..... Table 5.1.11
Storage ..... 5.1.3.1.8, 5.1.3.1.9, 5.1.3.2.3, 5.3.3.3.2 to 5.3.3.3.6
Medical support gas (definition) 3.3.11
Medical–surgical vacuum (definition) 3.3.112
Medical–surgical vacuum systems ..... *see* Vacuum systems, medical–surgical
Moisture indicators 5.3.3.5.5, A.5.3.3.5.5
Monitor hazard current ..... *see* Hazard current, monitor
Multiple treatment facility (definition) 3.3.114
mV (definition) 3.3.115

-N-

Nasal cannula (definition) 3.3.116
Nasal catheter (definition) 3.3.117
Nebulizers
Definition 3.3.118
Negative pressure (definition) 3.3.119
Nitrogen ..... *see also* Medical gases; Support gases
Definition 3.3.120
Joints, purging of 5.1.10.5.5, 5.3.10.7.5, A.5.3.10.7.5, A.5.10.5.5
Oil-free, dry ..... 5.1.3.5.1(1), 5.1.12.2.2, 5.1.12.3.1.2, 5.3.10.7.5.1, 5.3.12.3.4.5, 5.3.12.3.6, 5.3.12.3.7, 5.3.12.3.9.1
Definition 3.3.120.1
Nitrogen narcosis
Definition 3.3.121
Nitrous oxide
Definition 3.3.122
Hazards B.2.1
Nitrous oxide systems
Bulk (definition) 3.3.19.1
Designation colors/operating pressures ..... Table 5.1.11
Indoor locations for 5.1.3.3.1.6
Other health care facilities 14.3.5.2
Supply systems ..... 5.1.3.3.1.8, 5.1.3.3.1.10, 5.1.3.4.2, 5.1.3.4.4(2), A.5.1.3.4.2
WAGD for 13.3.5.2
Noncombustible (hyperbaric) (definition) 3.3.123
Noncombustible (hypobaric) (definition) 3.3.124
Noncombustible material (definition) 3.3.125, A.3.3.125
Nonflammable (definition) 3.3.126
Nonflammable anesthetic agent ..... *see also* Anesthetics; Inhalation anesthetics, use of
Definition 3.3.127, A.3.3.127
Nonflammable anesthetizing location ..... *see* Anesthetizing locations
Nonflammable gases ..... 9.4; *see also* Medical gases
Nonflammable medical gas system ..... *see* Medical gas systems; Vacuum systems, medical–surgical
Nursing homes ..... Chap. 17
Definition 3.3.129

-O-

Oil indicator 5.3.3.5.6
Operating supply (definition) 3.3.173.1
Other health care facilities ..... Chap. 14, A.14.3.5.1(3)(c); *see also* Anesthetizing locations; Inhalation anesthetics, use of
Oxidizing gas (definition) 3.3.130, A.3.3.130
Oxygen ..... *see also* Medical air; Medical gases
Definition 3.3.131, A.3.3.131
Designation colors/operating pressures ..... Table 5.1.11

Copyright National Fire Protection Association
Provided by IHS under license with NFPA
No reproduction or networking permitted without license from IHS
Not for Resale

Gaseous (definition) 3.3.131.1
Hazards B.2.1
Liquid
Definition 3.3.131.2, A.3.3.131.2
Storage 5.1.3.1.9
Therapy ..... *see* Hyperbaric facilities
Toxicity
Hyperbaric (definition) 3.3.136
In hyperbaric treatments (definition) A.3.3.136
Transferring B.2.1
Oxygen cylinders ..... *see* Cylinders
Oxygen delivery equipment ..... *see also* Cylinders; Pipe and piping, gas
Definition 3.3.132, A.3.3.132
Oxygen-enriched atmosphere
Definition 3.3.133
Hazards of B.2.1
Oxygen hoods (definition) 3.3.134
Oxygen index (definition) 3.3.135
Oxygen systems ..... *see also* Oxygen delivery equipment
Bulk (definition) 3.3.19.2, A.3.3.19.2
Indoor locations for 5.1.3.3.1.6
Supply systems ..... 5.1.3.3.1.9, 5.1.3.4.2, 5.1.3.4.4(2), A.5.1.3.4.2
Emergency oxygen supply connection (EOSC) 5.1.3.4.14, A.5.1.3.4.14

-P-

Partial pressure ..... *see* Pressure, partial
Patient bed location (definition) 3.3.137
Patient care areas ..... *see also* Electrical systems
Definition 3.3.138, A.3.3.138
Patient-care–related electrical appliances
Definition 3.3.139
Patient care vicinity (definition) 3.3.140
Patient equipment grounding point (definition) 3.3.141
Patient leads
Definition 3.3.142, A.3.3.142
Isolated
Definition 3.3.84
Patient medical gas (definition) ..... 3.3.143; *see also* Medical air; Nitrous oxide; Oxygen
Pipe and piping, gas
Branch (lateral) line (definition) 3.3.145.1
Branch takeoffs 5.1.10.10.6, 5.3.10.10.9
Definitions 3.3.145
Ground, use as 5.1.13.1.3, 5.3.13.5.2
Hyperbaric facilities 20.3.4.1.3
Installation 5.1.10.10, 5.3.10.10
Instrument air systems 5.1.3.8.9
Interconnections, prohibited 5.1.10.10.8, 5.3.10.10.12
Labeling 5.1.11.1, 5.3.11.1
Laboratories 11.11, A.11.11.2.1
Level 1 ... 5.1.3.5.11, 5.1.12, A.5.1.3.5.11.4, A.5.1.3.5.11.6, A.5.1.12
Distribution 5.1.10, A.5.1.10
Supply 5.1.3.5.11, 5.1.3.6.5, 5.1.3.8.9, A.5.1.3.5.11.4, A.5.1.3.5.11.6
Support gas 5.1.14.9
Level 2 ..... 5.2.10
Level 3, distribution 5.3.10, A.5.3.10.7.5, A.5.3.10.10.3
Main line (definition) 3.3.145.2
Manufacturer's instructions 5.1.10.10.9
Nonflammable medical gases 13.4.1.2.7.2
Special precautions 5.1.13.1, 5.3.10.10.10
Support 5.1.10.10.4, 5.3.10.10.6
Tests ..... 5.1.12, 5.3.12, 5.3.12.4.2 to 5.3.12.4.8, A.5.1.12, A.5.3.12.3.10(3)(b)
Installer performed tests 5.1.12.2
System verification ..... 5.1.12.3, 5.3.12.3, 5.3.12.4.8.2, A.5.1.12.3.11(3), A.5.3.12.3.10(3)(b)
Underground piping outside of buildings . 5.1.10.10.5, 5.3.10.10.8
Underground piping within buildings/within floor slabs 5.3.10.10.7
Piped distribution system ..... 5.1.10, 5.3.10, A.5.1.10, A.5.3.10.7.5, A.5.3.10.10.3; *see also* Central supply system, Level 1; Central supply system, Level 2
Definition 3.3.144
Piped gas systems ..... *see* Medical gas systems
Plugs (attachment plugs, caps)
Definition 3.3.146
Positive-negative pressure breathing (definition) 3.3.147
Positive pressure
Change in system 5.1.10.10.10.1
Definition 3.3.148.6
Initial piping purge test 5.3.12.2.6
Initial pressure test 5.3.12.2.3
Initial standing pressure test 5.3.12.2.7
Labeling of systems ..... 5.1.11.1.1(3), 5.1.11.2.2
Standing pressure test 5.1.12.2.6
Power systems ..... *see* Electrical systems
Pressure
Absolute (definition) 3.3.148.1
Ambient (definition) 3.3.148.2
Gauge (definition) 3.3.148.3
High (definition) 3.3.148.4
Multiple, central supply system 5.1.3.4.7
Negative (definition) 3.3.119
Partial (definition) 3.3.148.5, A.3.3.148.5
Positive ..... *see* Positive pressure
Standard operating pressures, gas and vacuum systems ..... Table 5.1.11
Working (definition) 3.3.148.7, A.3.3.148.7
Pressure indicators 5.1.8, 5.1.14.7, 5.2.8, C.5.2.5, C.5.2.14
Pressure-reducing regulators
Definition 3.3.149, A.3.3.149
Pressure regulators, final line 5.1.3.4.5
Pressure relief valves 5.1.3.4.6, 5.3.3.4.2.2, 5.3.3.4.2.3, 20.3.4.1, C.5.1.1
Medical air system 5.1.3.5.11.10
Pressure testing
Individual pressurization 5.1.12.3.3.1
Initial pressure test 5.1.12.2.3, 5.3.12.2.3
Operational pressure 5.1.12.3.10
Pressure differential 5.1.12.3.3.2
Standing pressure tests 5.1.12.2.6, 5.1.12.3.2, 5.3.12.2.7, 5.3.12.3.2, 5.3.12.4.2, A.5.1.12.3.2
Verifier operational pressure test 5.3.12.3.9
Pressure vessels ..... *see* Hyperbaric facilities
Procedure room (definition) 3.3.150
Psia (pounds per square inch absolute)
Definition 3.3.151
Psig (pounds per square inch gauge)
Definition 3.3.152, A.3.3.152
Pumps, vacuum ..... *see* Vacuum pumps
Purge test, piping 5.1.12.2.5, 5.3.12.2.6, 5.3.12.4.5
Purpose of standard 1.2

-Q-

Quiet grounds
Definition 3.3.153

-R-

Reactance (definition) 3.3.154
Reactive material (definition) 3.3.155, A.3.3.155
Reference grounding point
Definition 3.3.156
References ..... Chap. 2, Annex G
Refrigerating equipment
Definition 3.3.157, A.3.3.157

Copyright National Fire Protection Association
Provided by IHS under license with NFPA
No reproduction or networking permitted without license from IHS
Not for Resale

Regulators
Medical air 5.1.3.5.9, 5.1.3.5.11.5, 5.1.3.5.11.6, 5.1.3.5.11.9, A.5.1.3.5.11.6
Relative analgesia (definition) 3.3.158
Remote (definition) 3.3.159, A.3.3.159
Reserve supply (definition) 3.3.160
Respiratory therapy
Fire hazards B.2.1
Mechanical hazards B.2.3.3
Toxicity during B.2.3.1
Risers, piping
Definition 3.3.145.3
Valves 5.1.4.6, 5.1.11.2.5

-S-

Safety can (definition) 3.3.161
Safety mechanisms 5.3.13.3, 9.7.4
Scavenging .....*see also* Waste anesthetic gas disposal
Definition 3.3.162
SCFM (standard cubic feet per minute)
Definition 3.3.163
Scope of standard ..... 1.1, A.1.1.11.1(3), A.1.1.12, A.1.1.20
Selected receptacles (definition) 3.3.164
Self-extinguishing (definition) 3.3.165
Semipermanent connection (definition) 3.3.166
Service inlets 5.3.5, 5.3.11.3, A.5.3.5
Definition 3.3.167
Service outlets 5.3.5, 5.3.11.3, A.5.3.5
Definition 3.3.168
Service valves 5.1.4.7, 5.1.11.2.6
Shall (definition) 3.2.7
Shock hazard .....*see* Electric shock (electrostatic) hazard
Should (definition) 3.2.8
Shutoff valves 5.3.13.5.4
Accessibility 5.1.4.2
Emergency 5.3.4.1
Gas ..... 5.1.4.1 to 5.1.4.5, 5.3.3.4.2.1, 5.3.4.1, A.5.1.4.5, A.5.3.4
Labeling 5.1.11.2, 5.3.11.2
Types 5.1.4.3
Vacuum ..... 5.1.4.1 to 5.1.4.5, A.5.1.4.5
Signs .....*see* Labeling and identification
Single treatment facilities (definition) 3.3.169, A.3.3.169
Site of intentional expulsion (definition) 3.3.170, A.3.3.170
Source valves 5.1.4.4, 5.1.11.2.3
Staff .....*see* Employees
Standard
Adoption
Requirements 1.6
Sample ordinance ..... Annex F
Definition 3.2.9
Enforcement 1.6.2
Station inlets 5.1.5, 5.1.11.3, 5.2.5, 5.3.5, A.5.1.5, A.5.3.5, C.5.2.18
Definition 3.3.171
Station outlets .. 5.1.5, 5.1.11.3, 5.2.5, 5.3.5, A.5.1.5, A.5.3.5, C.5.2.18
Definition 3.3.172
Storage
Containers .....*see* Containers
Cylinders .....*see* Cylinders
Gas systems .....*see* Medical gas systems
Oxygen 5.1.3.1.9
Supply source .....*see also* Level 1 medical piped gas and vacuum systems; Level 3 piped gas systems
Operating supply (definition) 3.3.173.1
Primary supply (definition) 3.3.173.2
Reserve supply (definition) 3.3.173.3
Secondary supply (definition) 3.3.173.4
Supply systems .....*see* Central supply system, Level 1; Central supply system, Level 2; Level 1 medical piped gas and vacuum systems; Level 2 medical piped gas and vacuum systems; Level 3 piped gas systems; Pipe and piping, gas; Piped distribution system
Support gases .....*see also* Instrument air; Nitrogen
Central supply system for 5.1.3.4.3
Definition 3.3.174
Level 1 ..... 5.1.3.4.3, 5.1.14
Medical (definition) 3.3.111
Surface-mounted medical gas rail systems 5.1.7, 5.2.7, A.5.1.7
Definition 3.3.175, A.3.3.175

-T-

Task illumination (definition) 3.3.176
Terminals
Definition 3.3.177, A.3.3.177
Inlets .....*see* Station inlets
Total hazard current .....*see* Hazard current, total
Toxicity
Oxygen .....*see* Oxygen, toxicity
Tracheotomy tube (definition) 3.3.178.2, A.3.3.178.2
Transformer, isolation .....*see* Isolation transformer
Tube .....*see* Endotracheal tube; Tracheotomy tube

-U-

Unattended laboratory operation
Definition 3.3.179, A.3.3.179
Units of measurement 1.5, A.1.5.1
Use point (definition) 3.3.180
Utility center (J box) (definition) 3.3.181, A.3.3.181

-V-

Vacuum indicators 5.1.8, 5.2.8, C.5.2.5, C.5.2.14
Vacuum pumps
Alarms 5.1.9.5, A.5.1.9.5
Level 1 systems ..... 5.1.3.6.2, 5.1.3.6.6.1 to 5.1.3.6.6.5
Level 3 systems 5.3.3.3.2.2, 5.3.3.3.7
Vacuum receivers 5.1.3.6.3
Vacuum systems, medical–surgical ..... Chap. 5
Alarms
Area ..... 5.1.9.3, A.5.1.9.3.4(1), Table A.5.1.9.3, C.5.1.7
Local 5.1.9.1, 5.1.9.5, A.5.1.9.5
Master .... 5.1.9.2, Table A.5.1.9.2, C.5.1.3, C.5.2.10 to C.5.2.13
Birthing centers 21.3.5
Definition 3.3.113
Exhaust 5.1.3.6.7, 5.3.3.6.4, A.5.3.3.6.4.8
Hazards of B.2.2
Hospitals ..... 13.3.5, A.13.3.5.1(3)(c)
Installers, qualification of 5.1.10.10.11, 5.1.10.10.12, 5.3.10.10.1
Labeling 5.1.13.2, 5.3.13.6
Level 1 ..... 5.1.3.6, 5.1.9.2, 5.1.9.3, 5.1.10.2, 5.1.12, 5.1.13.1.4, 5.1.13.1.5, 5.1.13.2, A.5.1.3.6, A.5.1.5, A.5.1.9.2, A.5.1.9.3, A.5.1.9.5, A.5.1.12, C.5.1.3, C.5.2.10 to C.5.2.13
Conversion to gas system 5.1.10.10.10.2
Definition 3.3.91
Designation colors ..... Table 5.1.11
Electrical power and control 5.1.3.6.6
Maintenance 5.3.13.7
Operating pressures ..... Table 5.1.11
Piping 5.1.3.6.5, 5.1.10.2
Record keeping 5.3.13.7
Shutoff valves 5.1.4.1
Standard designation colors and operating pressures ..... Table 5.1.11
Station outlets/inlets 5.1.5
Level 2 ..... 5.2.3.6
Level 3 ..... 5.3.3.6.4, 5.3.10.2, 5.3.12, 5.3.13.5, A.5.3.3.6.4.8, A.5.3.12.3.10(3)(b)
Definition 3.3.95, A.3.3.95
Drains 5.3.3.6.3, A.5.3.3.6.3
Piping 5.3.10.2
Testing 5.3.12.4
Limited care facilities ..... 18.3.5, A.18.3.5.1(3)(c)

--`,,`,,,`-`-`,,`,,`,`,,`---
Copyright National Fire Protection Association
Provided by IHS under license with NFPA
No reproduction or networking permitted without license from IHS
Not for Resale

Manufactured assemblies
to use with .....*see* Manufactured assemblies
Nursing homes ..... 17.3.5, A.17.3.5.1(3)(c)
Other health care facilities ..... 14.3.5, A.14.3.5.1(3)(c)
Piping
Level 1 systems 5.1.3.6.5, 5.1.10.2
Level 3 systems 5.3.10.2
Special precautions 5.1.13.1.4, 5.1.13.1.5, 5.3.13.5
Tests .....*see also* Cross-connection test
Final standing vacuum test 5.3.12.4.3
Initial leak tests 5.3.12.2.4
Initial pressure test 5.3.12.2.3
Initial standing vacuum test 5.3.12.2.8
Standing vacuum test 5.1.12.2.7
Vacuum terminals .....*see* Station inlets
Valves .....*see also specific type, such as* Shutoff valves
Level 1 ..... 5.1.4, 5.1.12.3.4, A.5.1.4, Fig. A.5.1.4, C.5.2.17
Level 2 ..... 5.2.4
Level 3 ..... 5.3.3.4.2, 5.3.4, 5.3.10.1.1, 5.3.11.2, A.5.3.4
Vaporizers 5.1.3.4.13.10
Definition 3.3.182
Ventilation .....*see also* Exhaust systems
Anesthetizing locations 6.6.1
Central supply systems and storage, gas 5.1.3.3.3
Enclosures, medical gas systems 5.3.3.3.6
Hyperbaric chambers 20.2.4,
Laboratories .....*see* Laboratories
Manifolds, locations for 5.1.3.3.3.1
Venting .....*see* Ventilation

-W-

Warning signs .....*see* Labeling and identification
Warning systems .....*see* Alarm systems
Waste anesthetic gas disposal (WAGD) systems ..... 5.1.3.4(6)
Alarms 5.1.3.7.4
Area ..... 5.1.9.3, A.5.1.9.3.4(1) and (2), Table A.5.1.9.3
Local 5.1.9.5, A.5.1.9.5
Definition 3.3.184
Designation colors ..... Table 5.1.11
Electrical power and control 5.1.3.7.5
Exhaust 5.1.3.7.6
Hazards of B.2.3
Hospitals 13.3.5.2
Interface (definition) 3.3.183, A.3.3.183
Joints in 5.1.10.9
Level 1 piped gas and vacuum systems ..... 5.1.3.3.1.3(3), 5.1.3.7, 5.1.12, A.5.1.3.7, A.5.1.12
Level 2 piped gas and vacuum systems 5.2.3.7
Operating pressures ..... Table 5.1.11
Other health care facilities ..... 14.3.5.1, A.14.3.5.1(3)(c)
Producers 5.1.3.7.2
Sources 5.1.3.7.1, A.5.1.3.7.1
Wet locations
Definition 3.3.185, A.3.3.185
Working pressure .....*see* Pressure, working

-Z-

Zone valves 5.1.4.8

Copyright National Fire Protection Association
Provided by IHS under license with NFPA
No reproduction or networking permitted without license from IHS
Not for Resale

Sequence of Events Leading to Publication of an NFPA Committee Document

Call goes out for proposals to amend existing document or for recommendations on new document.

▼

Committee meets to act on proposals, to develop its own proposals, and to prepare its report.

▼

Committee votes on proposals by letter ballot. If two-thirds approve, report goes forward. Lacking two-thirds approval, report returns to committee.

▼

Report — *Report on Proposals* (ROP) — is published for public review and comment.

▼

Committee meets to act on each public comment received.

▼

Committee votes on comments by letter ballot. If two-thirds approve, supplementary report goes forward. Lacking two-thirds approval, supplementary report returns to committee.

▼

Supplementary report — *Report on Comments* (ROC) — is published for public review.

▼

NFPA membership meets (Annual or Fall Meeting) and acts on committee report (ROP or ROC).

▼

Committee votes on any amendments to report approved at NFPA Annual or Fall Meeting.

▼

Appeals to Standards Council on Association action must be filed within 20 days of the NFPA Annual or Fall Meeting.

▼

Standards Council decides, based on all evidence, whether or not to issue standard or to take other action, including upholding any appeals.

Committee Membership Classifications

The following classifications apply to Technical Committee members and represent their principal interest in the activity of the committee.

M *Manufacturer:* A representative of a maker or marketer of a product, assembly, or system, or portion thereof, that is affected by the standard.

U *User:* A representative of an entity that is subject to the provisions of the standard or that voluntarily uses the standard.

I/M *Installer/Maintainer:* A representative of an entity that is in the business of installing or maintaining a product, assembly, or system affected by the standard.

L *Labor:* A labor representative or employee concerned with safety in the workplace.

R/T *Applied Research/Testing Laboratory:* A representative of an independent testing laboratory or independent applied research organization that promulgates and/or enforces standards.

E *Enforcing Authority:* A representative of an agency or an organization that promulgates and/or enforces standards.

I *Insurance:* A representative of an insurance company, broker, agent, bureau, or inspection agency.

C *Consumer:* A person who is, or represents, the ultimate purchaser of a product, system, or service affected by the standard, but who is not included in the *User* classification.

SE *Special Expert:* A person not representing any of the previous classifications, but who has a special expertise in the scope of the standard or portion thereof.

NOTES:

1. "Standard" connotes code, standard, recommended practice, or guide.
2. A representative includes an employee.
3. While these classifications will be used by the Standards Council to achieve a balance for Technical Committees, the Standards Council may determine that new classifications of members or unique interests need representation in order to foster the best possible committee deliberations on any project. In this connection, the Standards Council may make such appointments as it seems appropriate in the public interest, such as the classification of "Utilities" in the National Electrical Code Committee.
4. Representatives of subsidiaries of any group are generally considered to have the same classification as the parent organization.

Copyright National Fire Protection Association
Provided by IHS under license with NFPA
No reproduction or networking permitted without license from IHS
Not for Resale

NFPA Technical Committee Document Proposal Form

Note: All proposals must be received by 5:00 p.m. EST/EDST on the published proposal closing date.

For further information on the standards-making process, please contact Codes and Standards Administration at 617-984-7249. For technical assistance, please call NFPA at 617-770-3000.

FOR OFFICE USE ONLY
Log #: _____
Date Rec'd: _____

Please indicate in which format you wish to receive your ROP/ROC: ☐ **CD ROM** ☐ **paper** ☐ **download**
(Note: In choosing the download option you intend to view the ROP/ROC from our Website. No copy will be sent to you.)

Date 12/18/02 **Name** John B. Smith **Telephone** 617-555-1212
Company _____
Address 9 Seattle St. **City** Seattle **State** WA **Zip** 02255
Please indicate organization represented (if any) Fire Marshals Assn. of North America

1. **a) NFPA Document Title** National Fire Alarm Code
   b) NFPA No. & Edition NFPA 72, 2002 ed. **c) Section/Paragraph** 4.4.7.1.1
2. **Proposal Recommends:** *(check one)* ☐ **new text** ☐ **revised text** ☒ **deleted text**
3. **Proposal.** *(Include proposed new or revised wording, or identification of wording to be deleted.)* Note: Proposed text should be in legislative format, that is, use underscore to denote wording to be inserted (inserted wording) and strike-through to denote wording to be deleted (~~deleted wording~~). Delete exception.
4. **Statement of Problem and Substantiation for Proposal.** Note: State the problem that will be resolved by your recommendation. Give the specific reason for your proposal including copies of tests, research papers, fire experience, etc. If more than 200 words, it may be abstracted for publication. A properly installed and maintained system should be free of ground faults. The occurrence of one or more ground faults should be required to cause a "trouble" signal because it indicates a condition that could contribute to future malfunction of the system. Ground fault protection has been widely available on these systems for years and its cost is negligible. Requiring it on all systems will promote better installations, maintenance and reliability.
5. ☒ **This Proposal is Original Material.** Note: Original material is considered to be the submitter's own idea based on or as a result of his/her own experience, thought, or research and, to the best of his/her knowledge, is not copied from another source.

   ☐ **This Proposal is Not Original Material; Its Source** ***(if known)*** **is as Follows:** _____

Sample

I hereby grant the NFPA all and full rights in copyright to this proposal, and I understand that I acquire no rights in any publication of NFPA in which this proposal in this or another similar or analogous form is used.

Signature ***(Required)*** John B. Smith

PLEASE USE SEPARATE FORM FOR EACH PROPOSAL • NFPA FAX (617) 770-3500

Mail to: Secretary, Standards Council • NFPA • 1 Batterymarch Park • PO Box 9101 • Quincy, MA 02269-9101

Copyright National Fire Protection Association
Provided by IHS under license with NFPA
No reproduction or networking permitted without license from IHS
Not for Resale

NFPA Technical Committee Document Proposal Form

Note: All proposals must be received by 5:00 p.m. EST/EDST on the published proposal closing date.

For further information on the standards-making process, please contact Codes and Standards Administration at 617-984-7249. For technical assistance, please call NFPA at 617-770-3000.

FOR OFFICE USE ONLY
Log #: _____
Date Rec'd: _____

Please indicate in which format you wish to receive your ROP/ROC: ☐ **CD ROM** ☐ **paper** ☐ **download**
(Note: In choosing the download option you intend to view the ROP/ROC from our Website. No copy will be sent to you.)

Date _____ **Name** _____ **Telephone** _____
Company _____
Address _____ **City** _____ **State** _____ **Zip** _____
Please indicate organization represented (if any) _____

1. **a) NFPA Document Title** _____
   b) NFPA No. & Edition _____ **c) Section/Paragraph** _____

2. **Proposal Recommends:** *(check one)* ☐ **new text** ☐ **revised text** ☐ **deleted text**

3. **Proposal.** *(Include proposed new or revised wording, or identification of wording to be deleted.)* Note: Proposed text should be in legislative format, that is, use underscore to denote wording to be inserted (inserted wording) and strike-through to denote wording to be deleted (~~deleted wording~~). _____

4. **Statement of Problem and Substantiation for Proposal.** Note: State the problem that will be resolved by your recommendation. Give the specific reason for your proposal including copies of tests, research papers, fire experience, etc. If more than 200 words, it may be abstracted for publication. _____

5. ☐ **This Proposal is Original Material.** Note: Original material is considered to be the submitter's own idea based on or as a result of his/her own experience, thought, or research and, to the best of his/her knowledge, is not copied from another source.

   ☐ **This Proposal is Not Original Material; Its Source *(if known)* is as Follows:** _____

I hereby grant the NFPA all and full rights in copyright to this proposal, and I understand that I acquire no rights in any publication of NFPA in which this proposal in this or another similar or analogous form is used.

Signature *(Required)* _____

PLEASE USE SEPARATE FORM FOR EACH PROPOSAL • NFPA FAX (617) 770-3500

Mail to: Secretary, Standards Council • NFPA • 1 Batterymarch Park • PO Box 9101 • Quincy, MA 02269-9101

Copyright National Fire Protection Association
Provided by IHS under license with NFPA
No reproduction or networking permitted without license from IHS
Not for Resale