Errata

NFPA 99

Standard for Health Care Facilities

2005 Edition

Reference: Various
Errata No.: 99-05-1

The Committee on Health Care Facilities notes the following errors in the 2005 edition of NFPA 99, *Standard for Health Care Facilities*.

1. In Chapter 2, Referenced Publications, modify as follows:

a. *Delete the reference to* NFPA 50
b. *Update the reference date on* NFPA 70 *to* "2005"
c. *Update the reference date on* NFPA 72 *to* "2002"
d. *Update the reference date on* NFPA 110 *to* "2005"
e. *Update the reference date on* NFPA 326 *to* "2005"

2. Revise 4.4.2.1.3 as follows:

4.4.2.1.3 Automatic Transfer Switch. Transfer of all loads shall be accomplished using automatic transfer switch (es). Each automatic transfer switch 600 volts or below shall be listed for the purpose and approved for emergency electrical service (see NFPA 70, *National Electrical Code*, Article 700.3) as a complete assembly.

3. In section 5.1.9.2.2, change the reference from: "…complies with 5.1.9.5." to "…complies with 5.1.9.4."

4. In table 5.1.12.3.11 change the oxygen concentration from "≥97%" *to* "≥99%".

5. Revise paragraphs in 9.6.2.3 to read as follows:

9.6.2.3 Transferring Liquid Oxygen. Transferring of liquid oxygen from one container to another shall comply with 9.6.2.3.1 or 9.6.2.3.2, as applicable.

9.6.2.3.1 Transfer to reservoirs or portable units over 50 psi (344.74 kPa) shall include the following:
1) A designated area separated from any portion of a facility wherein patients are housed, examined, or treated by a fire barrier of 1 hour fire-resistive construction; and
2) The area is mechanically ventilated, is sprinklered, and has ceramic or concrete flooring; and

--`,,```,,,,````-`-`,,`,,`,`,,`---
Copyright National Fire Protection Association
Provided by IHS under license with NFPA
No reproduction or networking permitted without license from IHS
Not for Resale

3) The area is posted with signs indicating that transferring is occurring, and that smoking in the immediate area is not allowed.
4) The individual filling the portable container has been properly trained in the filling procedures.

9.6.2.3.2 Transfer to portable containers at 50 psi (344.74.kPa) and under shall include the following:
1) The area is well-ventilated, and has noncombustible flooring; and
2) The area is posted with signs indicating that smoking in the area is not allowed; and
3) The individual filling the portable container has been properly trained in the filling procedure; and
4) The guidelines of CGA Pamphlet P-2.6, *Transfilling of Low-Pressure Liquid Oxygen to be Used for Respiration*, and CGA Pamphlet P-2.7, *Guide for the Safe Storage, Handling and Use of Portable Liquid Oxygen Systems in Health Care Facilities,* are met.

Issue Date: May 23, 2005

Copyright © 2005 All Rights Reserved
NATIONAL FIRE PROTECTION ASSOCIATION

Copyright National Fire Protection Association
Provided by IHS under license with NFPA
No reproduction or networking permitted without license from IHS
Not for Resale

NFPA 99

Standard for Health Care Facilities

2005 Edition



NFPA, 1 Batterymarch Park, Quincy, MA 02169-7471
An International Codes and Standards Organization

Copyright National Fire Protection Association
Provided by IHS under license with NFPA
No reproduction or networking permitted without license from IHS

Not for Resale

IMPORTANT NOTICES AND DISCLAIMERS CONCERNING NFPA DOCUMENTS

NOTICE AND DISCLAIMER OF LIABILITY CONCERNING THE USE OF NFPA DOCUMENTS

NFPA codes, standards, recommended practices, and guides, of which the document contained herein is one, are developed through a consensus standards development process approved by the American National Standards Institute. This process brings together volunteers representing varied viewpoints and interests to achieve consensus on fire and other safety issues. While the NFPA administers the process and establishes rules to promote fairness in the development of consensus, it does not independently test, evaluate, or verify the accuracy of any information or the soundness of any judgments contained in its codes and standards.

The NFPA disclaims liability for any personal injury, property or other damages of any nature whatsoever, whether special, indirect, consequential or compensatory, directly or indirectly resulting from the publication, use of, or reliance on this document. The NFPA also makes no guaranty or warranty as to the accuracy or completeness of any information published herein.

In issuing and making this document available, the NFPA is not undertaking to render professional or other services for or on behalf of any person or entity. Nor is the NFPA undertaking to perform any duty owed by any person or entity to someone else. Anyone using this document should rely on his or her own independent judgment or, as appropriate, seek the advice of a competent professional in determining the exercise of reasonable care in any given circumstances.

The NFPA has no power, nor does it undertake, to police or enforce compliance with the contents of this document. Nor does the NFPA list, certify, test or inspect products, designs, or installations for compliance with this document. Any certification or other statement of compliance with the requirements of this document shall not be attributable to the NFPA and is solely the responsibility of the certifier or maker of the statement.

--`,,```,,,,````-`-`,,`,,`,`,,`---

Copyright National Fire Protection Association
Provided by IHS under license with NFPA
No reproduction or networking permitted without license from IHS

Not for Resale

ADDITIONAL NOTICES AND DISCLAIMERS

Updating of NFPA Documents

Users of NFPA codes, standards, recommended practices, and guides should be aware that these documents may be superseded at any time by the issuance of new editions or may be amended from time to time through the issuance of Tentative Interim Amendments. An official NFPA document at any point in time consists of the current edition of the document together with any Tentative Interim Amendments and any Errata then in effect. In order to determine whether a given document is the current edition and whether it has been amended through the issuance of Tentative Interim Amendments or corrected through the issuance of Errata, consult appropriate NFPA publications such as the National Fire Codes® Subscription Service, visit the NFPA website at www.nfpa.org, or contact the NFPA at the address listed below.

Interpretations of NFPA Documents

A statement, written or oral, that is not processed in accordance with Section 6 of the Regulations Governing Committee Projects shall not be considered the official position of NFPA or any of its Committees and shall not be considered to be, nor be relied upon as, a Formal Interpretation.

Patents

The NFPA does not take any position with respect to the validity of any patent rights asserted in connection with any items which are mentioned in or are the subject of NFPA codes, standards, recommended practices, and guides, and the NFPA disclaims liability for the infringement of any patent resulting from the use of or reliance on these documents. Users of these documents are expressly advised that determination of the validity of any such patent rights, and the risk of infringement of such rights, is entirely their own responsibility.

NFPA adheres to applicable policies of the American National Standards Institute with respect to patents. For further information contact the NFPA at the address listed below.

Law and Regulations

Users of these documents should consult applicable federal, state, and local laws and regulations. NFPA does not, by the publication of its codes, standards, recommended practices, and guides, intend to urge action that is not in compliance with applicable laws, and these documents may not be construed as doing so.

Copyrights

This document is copyrighted by the NFPA. It is made available for a wide variety of both public and private uses. These include both use, by reference, in laws and regulations, and use in private self-regulation, standardization, and the promotion of safe practices and methods. By making this document available for use and adoption by public authorities and private users, the NFPA does not waive any rights in copyright to this document.

Use of NFPA documents for regulatory purposes should be accomplished through adoption by reference. The term "adoption by reference" means the citing of title, edition, and publishing information only. Any deletions, additions, and changes desired by the adopting authority should be noted separately in the adopting instrument. In order to assist NFPA in following the uses made of its documents, adopting authorities are requested to notify the NFPA (Attention: Secretary, Standards Council) in writing of such use. For technical assistance and questions concerning adoption of NFPA documents, contact NFPA at the address below.

For Further Information

All questions or other communications relating to NFPA codes, standards, recommended practices, and guides and all requests for information on NFPA procedures governing its codes and standards development process, including information on the procedures for requesting Formal Interpretations, for proposing Tentative Interim Amendments, and for proposing revisions to NFPA documents during regular revision cycles, should be sent to NFPA headquarters, addressed to the attention of the Secretary, Standards Council, NFPA, 1 Batterymarch Park, P.O. Box 9101, Quincy, MA 02269-9101.

For more information about NFPA, visit the NFPA website at www.nfpa.org.

Copyright National Fire Protection Association
Provided by IHS under license with NFPA
No reproduction or networking permitted without license from IHS
Not for Resale

Copyright © 2005, National Fire Protection Association, All Rights Reserved

NFPA 99

Standard for

Health Care Facilities

2005 Edition

This edition of NFPA 99, *Standard for Health Care Facilities*, was prepared by the Technical Committees on Administration, Electrical Equipment, Electrical Systems, Gas Delivery Equipment, Health Care Emergency Management, Hyperbaric and Hypobaric Facilities, Laboratories, and Piping Systems, released by the Technical Correlating Committee on Health Care Facilities, and acted on by NFPA at its November Association Technical Meeting held November 13–17, 2004, in Miami Beach, FL. It was issued by the Standards Council on January 14, 2005, with an effective date of February 7, 2005, and supersedes all previous editions.

A tentative interim amendment (TIA) to subsection 5.1.5.16 was issued on January 14, 2005. For further information on tentative interim amendments see Section 5 of the NFPA Regulations Governing Committee Projects available at <http://www.nfpa.org/Codes/NFPADirectory.asp#Regs&Procedures>.

This edition of NFPA 99 was approved as an American National Standard on February 7, 2005.

Origin and Development of NFPA 99

The idea for this document grew as the number of documents under the original NFPA Committee on Hospitals grew. By the end of 1980, there existed 12 documents on a variety of subjects, 11 directly addressing fire-related problems in and about health care facilities. These documents covered health care emergency preparedness, inhalation anesthetics, respiratory therapy, laboratories in health-related institutions, hyperbaric facilities, hypobaric facilities, inhalation anesthetics in ambulatory care facilities, home use of respiratory therapy, medical–surgical vacuum systems in hospitals, essential electrical systems for health care facilities, safe use of electricity in patient care areas of health care facilities, and safe use of high-frequency electricity in health care facilities.

A history on the documents that covered these topics can be found in the "Origin and Development of NFPA 99" in the 1984 edition of NFPA 99.

What was then the Health Care Facilities Correlating Committee reviewed the matter beginning in late 1979 and concluded that combining all the documents under its jurisdiction would be beneficial to those who used those documents, for the following reasons:

(1) The referenced documents were being revised independently of each other. Combining all the individual documents into one document would place all of them on the same revision cycle.
(2) It would place in one unit many documents that referenced each other.
(3) It would be an easier and more complete reference for the various users of the document (e.g., hospital engineers, medical personnel, designers and architects, and the various types of enforcing authorities).

To learn if this proposal was desired or desirable to users of the individual documents, the Committee issued a request for public comments in the spring of 1981, asking whether purchasers of the individual documents utilized more than one document in the course of their activities and whether combining these individual documents would be beneficial. Seventy-five percent of responses supported such a proposal, with 90 percent of health care facilities and organizations supportive of it. Based on this support, the Correlating Committee proceeded with plans to combine all the documents under its jurisdiction into one document.

In January, 1982, a compilation of the latest edition of each of the 12 individual documents under the jurisdiction of the Correlating Committee was published. It was designated NFPA 99, *Health Care Facilities Code*. The Correlating Committee also entered the document into the revision cycle reporting to the 1983 Fall Meeting for the purpose of formally adopting the document.

For the 1984 edition of NFPA 99, in addition to technical changes, administrative and organizational changes were made.

--`,,```,,,,````-`-`,,`,,`,`,,`---

Copyright National Fire Protection Association
Provided by IHS under license with NFPA
No reproduction or networking permitted without license from IHS
Not for Resale

For the 1987 edition of NFPA 99, the third and final step in the process of combining the previous individual documents took place — that of integrating the content of these individual documents into a cohesive document. In addition, there were again technical changes made. The 1987 edition also saw the incorporation of NFPA 56F, *Standard on Nonflammable Medical Piped Gas Systems*, into NFPA 99.

For the 1990 edition of NFPA 99, some structural changes were made and some modifiers were added to make it easier to determine where requirements are applicable. Technical changes made included the following: correlation with NFPA *101®*, *Life Safety Code®*; changes for compressed medical air systems on the use of gas-powered medical devices operating at a gauge pressure of 200 psi, and piped gas systems in general; changes in leakage current limits for patient care electrical appliances; clarification that patient care areas and wet locations are mutually exclusive; and further guidance on the effects of a disaster on staff.

For the 1993 edition of NFPA 99 there were further efforts to make the document more user-friendly (e.g., placing all "recommended" guidance either in notes or in the appendix). Significant technical changes included the following: adding requirements and recommendations to further prevent or minimize fires in operating rooms; making major changes to requirements in Chapter 4 for installing, testing, inspecting, verifying, and maintaining nonflammable medical piped gas systems; adding new sections on dental compressed air and dental vacuum requirements in Chapter 4; changing leakage current limits of patient care–related electrical appliances to correlate more closely with an international document on the subject; revising laboratory requirements to correlate more closely with NFPA 45, *Standard for Laboratories Using Chemicals*; changing essential electrical system requirements in ambulatory health care clinics and medical/dental offices; and extensively revising hyperbaric chamber requirements (Chapter 19).

For the 1996 edition of NFPA 99, further changes to make the document more user-friendly were made. These included restructuring Chapters 3 and 4 so that all requirements for a Type 1, 2, or 3 essential electrical system, or a Level 1, 2, 3, or 4 piped gas or vacuum system, were contained in one section.

Other technical changes included the following:

(1) Moving requirements on flammable anesthetizing locations and the use of flammable inhalation anesthetics to a new Appendix 2
(2) Upgrading the subject of emergency preparedness from guidance to a new chapter containing requirements
(3) Adding a new chapter (Chapter 18) on home health care
(4) Revising Section 1-1 to reflect the intent that NFPA 99 applies only to facilities treating human beings
(5) In Chapter 3, revising load testing requirements for emergency generators to reference NFPA 110, *Standard for Emergency and Standby Power Systems,* and revising emergency lighting criteria for operating rooms
(6) In Chapter 4, revising requirements for medical compressed air systems, dental compressed air systems, waste anesthetic gas disposal systems, and dental piped gas/vacuum systems; adding a new section on "headwall units" ("manufactured assemblies"); and clarifying and moving requirements for transfilling containers of liquid oxygen to Chapter 8
(7) In Chapter 8, adding requirements for storage rooms containing cylinders and containers totaling less than 3000 ft^3
(8) In Chapters 12 to 17, revising criteria for gas and vacuum systems
(9) In Chapter 19, in addition to many technical changes, adding criteria for mobile hyperbaric facilities

For the 1999 edition, significant technical and structural changes included the following:

(1) Chapters 13, 14, and 15 (on ambulatory health care centers, clinics, and medical/dental offices, respectively) were replaced completely by new Chapter 13 covering health care facilities other than hospitals, nursing homes, and limited care facilities as defined in Chapter 2.
(2) Requirements for Level 2 gas and vacuum systems were developed (Section 4.4 in Chapter 4).
(3) Subsections 12.3.4, 16.3.4, and 7.3.4 were revised to correlate with the two significant changes in (1) and (2).
(4) In Chapter 3, load testing requirements for emergency power supplies of the essential electrical system were changed through reference, and the testing interval ("monthly") was reworded to be more responsive to needs of health care facilities.
(5) Clarification of transfer switches and branches of the emergency system was made.
(6) Clarification on the use of emergency power supplies other than for emergency power was made in 3.4.1.1.5.
(7) Paragraph 4.3.1.2, Distribution Requirements for Level 1 Gas Systems, was completely revised and restructured.
(8) Chapter 4 was made more user-friendly by reducing the number of internal cross-references between Sections 4.3 and 4.5.
(9) The order of installation and testing requirements for piped gas and vacuum systems was revised.
(10) Emphasis on emergency preparedness was made in Chapter 11 and its appendix material.
(11) Chapter 19, "Hyperbaric Facilities," was extensively revised in the areas of electrical wiring, air quality, ventilation lighting, equipment, communication, and safety management.
(12) A new chapter (Chapter 20) on freestanding birthing centers was added.

Copyright National Fire Protection Association
Provided by IHS under license with NFPA
No reproduction or networking permitted without license from IHS
Not for Resale

The 2002 edition included format and technical revisions. The *Manual of Style for NFPA Technical Committee Documents*, April 2000 edition, was applied to this document, resulting in changes to its structure and format. Introductory material in Chapter 1 was formatted for consistency among all NFPA documents. Referenced publications that apply to the document were relocated from the last chapter to Chapter 2, resulting in the renumbering of chapters. Informational references remained in the last annex. Appendices were designated as annexes. Definitions in Chapter 3 were reviewed for consistency with definitions in other NFPA documents, were systematically aligned, and were individually numbered. Paragraph structuring was revised with the intent of one mandatory requirement per section, subsection, or paragraph. Information that often accompanied many of the requirements was moved to Annex A, Explanatory Material. Exceptions were deleted or rephrased in mandatory text, unless the exception represented an allowance or required alternate procedure to a general rule when limited specified conditions exist. The reformatted appearance and structure provided continuity among NFPA documents, clarity of mandatory text, and greater ease in locating specific mandatory text.

The document scope and individual chapter scopes defining the intent of each chapter and document as a whole were located in Chapter 1.

The occupancy Chapters 13–21 stated what is required, while Chapters 4–12 prescribed how those requirements are achieved. Each chapter began with a section explaining applicability. Information concerning the nature of hazards was moved to Annex B. Annexes A and C retained explanatory information, and Annexes 1 and 2 became Annexes D and E. Informational references were in Annex F.

The changes in Chapter 4, Electrical Systems, addressed electrical wiring, transfer switches, inspection, and application.

Chapter 5 on Piping Systems was realigned so that Level 1 requirements were found in Section 5.1, and concurrently Level 2 in Section 5.2 and Level 3 in Section 5.3. Level 4 associated with laboratories was deleted, with requirements realigned in Chapter 11 on laboratories. Definitions were developed for vacuum systems and Levels 1, 2, and 3 gas systems in Chapter 3. Revisions were made to compressed gas cylinder identification and restraint; valve venting; ventilation of storage rooms; alarms; connection of the electrical supply for central supply systems with the essential electrical system; allowance of a three-way full port ball valve to isolate one branch or component; provisions for a monitored and audible low-content alarm on the surge gas while brazing; the allowance of medical air systems for application with human respiration; and deletion of 20-year-old appendix information.

Gas Delivery, Chapter 8, included a new section on the storage of compressed gas cylinders in patient care areas.

Chapter 11, Laboratories, clarified the structural protection of exits, and intent of portable fire extinguishers. Revisions were made concerning flammable and combustible liquids handling requirements.

An increased focus on the total process of maintaining services during a disaster, mitigating damage from a disaster, and recovery from a disaster was reflected in Chapter 12, Emergency Management. Annexed security program information was expanded.

Chapter 20, Hyperbaric Facilities, contained revised emergency depressurization requirements, safety director responsibilities, and emergency procedure performance.

The changes made to the 2005 edition are mainly for clarity, and are editorial in nature. In Chapter 3, the definitions for medical gas, patient medical gas, and medical support gas have been modified to differentiate between the different types of gases.

In Chapter 4, the requirements for switches and receptacles in anesthetizing locations have been moved to Chapter 13, Hospital Requirements. The extracted material from NFPA 110, *Standard for Emergency and Standby Power Systems*, has been updated.

In Chapter 5, the requirements for construction materials for filters, dryers, regulators, vacuum pumps, and after coolers have been changed to allow the manufacturers to choose the materials.

A centralized computer is now allowed to be used in lieu of one of the master alarms. Cylinders are allowed to be fitted with a means to slow the initial opening pressure. The requirement to individually secure the cylinders has been changed to no longer require the cylinders to be secured individually. Two new methods for making joints have been added to the requirements. Stainless steel tubing has been added as an approved material for vacuum systems. The requirement to braze a joint within 1 hour after cleaning has been changed to 8 hours. Vacuum joints must be leak tested, and operational pressure testing can now be conducted with the source gas.

Chapters 6, 7, 8, 9, 10, and 11 have undergone minor changes for clarity or for editorial reasons.

Chapter 12 has been revised to update the techniques used in emergency management in health care facilities.

In Chapters 13, 14, 15, 16, 17, 18, and 19 editorial corrections have been made.

Chapter 20 has been revised to heating and ventilation changes in the chamber. Additional restrictions to the types of materials that are allowed in the chamber have been added.

Copyright National Fire Protection Association
Provided by IHS under license with NFPA
No reproduction or networking permitted without license from IHS
Not for Resale

Technical Correlating Committee on Health Care Facilities (HEA-AAC)

Douglas S. Erickson, *Chair*
American Society for Healthcare Engineering, VI [U]
Rep. American Society for Healthcare Engineering

Constance Bobik, B&E Fire Safety Equipment Inc., FL [IM]
Wayne L. Brannan, Medical University of South Carolina, SC [U]
Rep. American Society of Safety Engineers
Michael A. Crowley, The RJA Group, Inc., TX [U]
Rep. NFPA Health Care Section
Richard E. Cutts, U.S. Air Force, TX [E]
Joshua W. Elvove, U.S. Department of Veterans Affairs, CO [U]
Rep. U.S. Department of Veterans Affairs
Marvin J. Fischer, Monroe Township, NJ [U]
Thomas W. Gardner, Schirmer Engineering Corporation, GA [I]
James R. Grimm, CDi Engineers, WA [SE]
William E. Koffel, Koffel Associates, Inc., MD [SE]
George F. Stevens, U.S. Department of Health and Human Services, AZ [E]
Rep. U.S. Department of Health and Human Services/IHS
Mayer D. Zimmerman, U.S. Department of Health and Human Services, MD [E]
Rep. U.S. Department of Health & Human Services/HCFA

Alternates

Eugene Phillips, Risk Management Resources, AZ [SE]
(Alt. to W. L. Brannan)
W. Thomas Schipper, Kaiser Foundation Health Plan, CA [U]
(Alt. to D. S. Erickson)
Sharon Stone Gilyeat, Koffel Associates, Inc., MD [SE]
(Alt. to W. E. Koffel)

Richard P. Bielen, NFPA Staff Liaison

This list represents the membership at the time the Committee was balloted on the final text of this edition. Since that time, changes in the membership may have occurred. A key to classifications is found at the back of the document.

NOTE: Membership on a committee shall not in and of itself constitute an endorsement of the Association or any document developed by the committee on which the member serves.

Committee Scope: This Committee shall have primary responsibility for documents that contain criteria for safeguarding patients and health care personnel in the delivery of health care services within health care facilities, as follows:

(1) From fire, explosion, electrical, and related hazards resulting either from the use of anesthetic agents, medical gas equipment, electrical apparatus, and high frequency electricity, or from internal or external incidents that disrupt normal patient care
(2) From fire and explosion hazards associated with laboratory practices
(3) In connection with the use of hyperbaric and hypobaric facilities (NFPA 99B) for medical purposes
(4) Through performance, maintenance, and testing criteria for electrical systems, both normal and essential
(5) Through performance, maintenance and testing, and installation criteria, as follows:
  (a) For vacuum systems for medical or surgical purposes
  (b) For medical gas systems

--`,,```,,,,````-`-`,,`,,`,`,,`---
Copyright National Fire Protection Association
Provided by IHS under license with NFPA
No reproduction or networking permitted without license from IHS
Not for Resale

Technical Committee on Administration (HEA-ADM)
(Chapters 1, 2, 3, and 7, and related paragraphs in Chapters 4–14 and 17–21)

Michael A. Crowley, *Chair*
The RJA Group, Inc., TX [SE]

James S. Davidson, Jr., Davidson Associates, DE [SE]
August F. DiManno, Jr., Fireman's Fund Insurance Company, NY [I]
William C. McPeck, State of Maine Employee Health and Safety, ME [E]
Mark A. Trudzinski, U.S. Army Medical Command, TX [U]

Alternate

William M. Dorfler, The RJA Group, Inc., IL [SE]
(Alt. to M. A. Crowley)

Richard P. Bielen, NFPA Staff Liaison

This list represents the membership at the time the Committee was balloted on the final text of this edition. Since that time, changes in the membership may have occurred. A key to classifications is found at the back of the document.

NOTE: Membership on a committee shall not in and of itself constitute an endorsement of the Association or any document developed by the committee on which the member serves.

Committee Scope: This Committee shall have primary responsibility for documents or portions of documents on the scope, application, and intended use of documents under the Health Care Facilities Project, as well as definitions not assigned to other committees in the Health Care Facilities Project.

Technical Committee on Electrical Equipment (HEA-ELE)
(Chapters 8, 10, and related paragraphs in Chapters 13, 14, 17, 18, 19, 21, and Annex D)

Lawrence S. Sandler, *Chair*
V.A. Medical Center, CA [U]

Saul Aronow, Waban, MA [SE]
Yadin David, Texas Childrens Hospital, TX [U]
Albert G. Garlatti, Intertek Testing Services NA Inc., MN [RT]
Alan Lipschultz, Christiana Care-Health Services, DE [SE]
Rep. Association for the Advancement of Medical Instrumentation
James A. Meyer, Pettis Memorial VA Hospital, CA [C]
Rep. American Society of Anesthesiologists
Joseph P. Murnane, Underwriters Laboratories Inc., NY [RT]
Lawrence S. Sandler, U.S. Department of Veterans Affairs, CA [U]
George F. Stevens, U.S. Department of Health and Human Services, AZ [E]
Michael Velvikis, High Voltage Maintenance Corporation, WI [IM]
Rep. InterNational Electrical Testing Association Inc.
Robert F. Willey, III, Siemens Medical Systems, Inc., NJ [M]
Rep. Health Industry Manufacturers Association

Alternates

Ralph E. Patterson, SETA-AC Testing, NC [IM]
(Alt. to M. Velvikis)
Dale Woodin, American Society for Healthcare Engineering, IL [U]
(Alt. to ASHE Rep.)

Richard P. Bielen, NFPA Staff Liaison

This list represents the membership at the time the Committee was balloted on the final text of this edition. Since that time, changes in the membership may have occurred. A key to classifications is found at the back of the document.

NOTE: Membership on a committee shall not in and of itself constitute an endorsement of the Association or any document developed by the committee on which the member serves.

Committee Scope: This Committee shall have primary responsibility for documents or portions of documents covering the maintenance, performance, and testing of equipment for the purpose of safeguarding patients and staff within patient care areas of health care facilities from the hazards of fire, explosion, electricity, nonionizing radiation, heat, and electrical interference.

--`,,```,,,,````-`-`,,`,,`,`,,`---
Copyright National Fire Protection Association
Provided by IHS under license with NFPA
No reproduction or networking permitted without license from IHS
Not for Resale

Technical Committee on Electrical Systems (HEA-ELS)
(Chapter 4 and related paragraphs in Chapters 13, 14, 17, 18, and 21)

Hugh O. Nash, Jr., *Chair*
Nash Lipsey Burch, LLC, TN [SE]

Scott C. Brockman, Post Glover LifeLink, KY [M]
Dan Chisholm, Healthcare Engineering Network, FL [IM]
James H. Costley, Jr., Newcomb & Boyd, GA [SE]
Rep. NFPA Health Care Section
Richard E. Cutts, U.S. Air Force, TX [E]
Herbert Daugherty, Electric Generating Systems Association, NJ [U]
Rep. Electrical Generating Systems Association
James R. Iverson, Onan Corporation, MN [M]
Larry Lau, U.S. Department of Veterans Affairs, DC [U]
Rep. U.S. Department of Veterans Affairs
Edward A. Lobnitz, TLC Engineering for Architecture, FL [SE]
James E. Meade, U.S. Army Corps of Engineers, MD [U]
Joseph P. Murnane, Underwriters Laboratories Inc., NY [RT]
Ronald M. Smidt, Carolinas HealthCare System, NC [U]
Rep. American Society for Healthcare Engineering
Michael Velvikis, High Voltage Maintenance Corporation, WI [IM]
Rep. InterNational Electrical Testing Association Inc.
Walter N. Vernon, IV, Mazzetti & Associates Inc., CA [SE]

Alternates

Lawrence A. Bey, Cummins West Hawaii Division, HI [M]
(Alt. to J. R. Iverson)
Douglas S. Erickson, American Society for Healthcare Engineering, VI [U]
(Alt. to R. M. Smidt)
Donald R. Morelli, TLC Engineering for Architecture, FL [SE]
(Alt. to E. A. Lobnitz)
Jeffrey L. Steplowski, U.S. Department of Veterans Affairs, DC [E]
(Alt. to L. Lau)
Howard Stickley, U.S. Army Corps of Engineers, DC [U]
(Alt. to J. E. Meade)
Herbert V. Whittall, Electrical Generating Systems Association, FL [U]
(Alt. to H. Daugherty)

Richard P. Bielen, NFPA Staff Liaison

This list represents the membership at the time the Committee was balloted on the final text of this edition. Since that time, changes in the membership may have occurred. A key to classifications is found at the back of the document.

NOTE: Membership on a committee shall not in and of itself constitute an endorsement of the Association or any document developed by the committee on which the member serves.

Committee Scope: This Committee shall have primary responsibility for documents or portions of documents covering performance, maintenance, and testing of electrical systems for the purpose of safeguarding patients, staff, and visitors within health care facilities.

Technical Committee on Gas Delivery Equipment (HEA-GAS)
(Chapter 9 and related paragraphs in Chapters 6, 13, 14, 17, 18, 19, 21, and Annex E)

Yadin David, *Chair*
Texas Childrens Hospital, TX [U]

Jay Crowley, U.S. Department of Health and Human Services, MD [E]
Richard E. Hoffman, Hoffman & Associates, Inc., KS [M]
Rep. Allied Healthcare Products, Inc.
Alan Lipschultz, Christiana Care-Health Services, DE [SE]
Rep. Association for the Advancement of Medical Instrumentation
George Mills, MM EC, Ltd., IL [U]
Rep. American Society for Healthcare Engineering
Dwight R. (DAK) Quarles, Institute of Exercise and Environmental Medicine, TX [U]
Jay R. Sommers, Kimberly-Clark Corporation, GA [M]
Robert M. Sutter, BOC Gases, NJ [M]
Rep. Compressed Gas Association
Gerald L. Wolf, SUNY/HSCB, Brooklyn, NY [C]
Rep. American Society of Anesthesiologists

Richard P. Bielen, NFPA Staff Liaison

This list represents the membership at the time the Committee was balloted on the final text of this edition. Since that time, changes in the membership may have occurred. A key to classifications is found at the back of the document.

NOTE: Membership on a committee shall not in and of itself constitute an endorsement of the Association or any document developed by the committee on which the member serves.

Committee Scope: This Committee shall have primary responsibility for documents or portions of documents on the performance and maintenance criteria for safeguarding patients and health care personnel from fire, explosion, electrical, and related hazards in anesthetizing locations involving the administration of both flammable and nonflammable anesthetics, including equipment and facilities ancillary thereto; and the performance, maintenance, and testing of patient-related gas equipment for the purpose of safeguarding patients and staff within health care facilities.

Copyright National Fire Protection Association
Provided by IHS under license with NFPA
No reproduction or networking permitted without license from IHS
Not for Resale

Technical Committee on Health Care Emergency Management (HEA-HCE)
(Chapter 12 and related paragraphs in Chapters 13, 14, 17, and 18)

Russell Phillips, *Chair*
Russell Phillips & Associates, Inc., NY [SE]

Pete Brewster, U.S. Deptartment of Veterans Affairs, IN [U]
Rep. U.S. Department of Veterans Affairs
Steve Ennis, The Reciprocal Group, VA [I]
Curt Fogel, North Dakota Department of Health, ND [I]
James C. Kendig, Jr., Health First, FL [U]
David J. Kitchin, Milcare, AZ [M]
William C. McPeck, State of Maine Employee Health and Safety, ME [E]
Thomas A. Salamone, Health Care & Life Safety Concepts, NY [SE]
W. Thomas Schipper, Kaiser Foundation Health Plan, CA [U]
Rep. American Society for Healthcare Engineering
Michael L. Sinsigalli, Windsor Locks Fire Department, CT [E]
Gregory E. Spahr, Loss Prevention Services, Inc., CA [SE]
Steven Vargo, Raritan Bay Medical Center, NJ [U]
Ronald W. Woodfin, TetraTek, Inc. Fire Safety Technologies, TX [SE]

Alternates

Monte Engel, North Dakota Department of Health, ND [E]
(Alt. to C. Fogel)
A. Richard Fasano, Russell Phillips & Associates, Inc., CA [SE]
(Alt. to R. Phillips)
David M. Hope, TetraTek Inc. Fire Safety Technologies, TN [SE]
(Alt. to R. W. Woodfin)
Robert L. Hutchinson, Jr. U.S. Department of Veterans Affairs, NY [U]
(Alt. to P. Brewster)
Susan B. McLaughlin, SBM Consulting Limited, IL [U]
(Alt. to W. T. Schipper)

Richard P. Bielen, NFPA Staff Liaison

This list represents the membership at the time the Committee was balloted on the final text of this edition. Since that time, changes in the membership may have occurred. A key to classifications is found at the back of the document.

NOTE: Membership on a committee shall not in and of itself constitute an endorsement of the Association or any document developed by the committee on which the member serves.

Committee Scope: This Committee shall have primary responsibility for documents or portions of documents covering the performance of health care facilities under diaster conditions.

Technical Committee on Hyperbaric and Hypobaric Facilities (HEA-HYP)
(Chapter 20 and NFPA 99B)

Wilbur T. Workman, *Chair*
Undersea & Hyperbaric Medical Society, TX [U]
Rep. Undersea & Hyperbaric Medical Society

Peter Atkinson, Hyperbaric Technical & Nurses Association Inc., Australia [U]
Richard C. Barry, Diversified Therapy, FL [SE]
Harold D. Beeson, U.S. National Aeronautics and Space Administration, NM [RT]
William H. L. Dornette, Kensington, MD [SE]
Christy Foreman, U.S. Department of Health and Human Services, MD [E]
W. T. Gurnée, OxyHeal Health Group, CA [M]
Robert W. Hamilton, Hamilton Research Ltd., NY [M]
Eric P. Kindwall, Medical College of Wisconsin, WI [U]
Michael D. Martin, Ford Motor Company, MI [U]
Barry Newton, Wandell Hull & Associates, NM [SE]
Russell E. Peterson, Environmental Tectonics Corporation, PA [M]
Stephen D. Reimers, Reimers Systems, Inc., VA [M]
Eric A. Schinazi, Duke University Medical Center, NC [U]
Robert F. Schumacher, Nth Systems Incorporated, NC [M]
J. Ronald Sechrist, Sechrist Industries, CA [M]
Paul J. Sheffield, International ATMO, Inc., TX [U]
Harry G. Vincent, Total Wound Treatment Center, TX [C]
Rep. Baromedical Nurses Association

--`,,```,,,,````-`-`,,`,,`,`,,`---

Copyright National Fire Protection Association
Provided by IHS under license with NFPA
No reproduction or networking permitted without license from IHS
Not for Resale

Alternates

Michael W. Allen, Environmental Tectonics Corporation, PA [M]
(Alt. to R. E. Peterson)
Glenn J. Butler, Life Support Technologies, Inc., NY [M]
(Alt. to R. W. Hamilton)
Ruben D. Campuzano, Undersea & Hyperbaric Medical Society, CA [U]
(Alt. to W. T. Workman)
Greg Godfrey, Sechrist Industries, Inc., CA [M]
(Alt. to J. R. Sechrist)
Robert B. Sheffield, International ATMO, Inc., TX [U]
(Alt. to P. J. Sheffield)
Ellen C. Smithline, Baystate Medical Center, MA [C]
(Alt. to H. G. Vincent)
Joanna H. Weitershausen, U.S. Department of Health and Human Services, MD [E]
(Alt. to C. Foreman)
Harry T. Whelan, Medical College of Wisconsin, WI [U]
(Alt. to E. P. Kindwall)
Larry L. Wischhoefer, Reimers Systems, Inc., WA [M]
(Alt. to S. D. Reimers)

Richard P. Bielen, NFPA Staff Liaison

This list represents the membership at the time the Committee was balloted on the final text of this edition. Since that time, changes in the membership may have occurred. A key to classifications is found at the back of the document.

NOTE: Membership on a committee shall not in and of itself constitute an endorsement of the Association or any document developed by the committee on which the member serves.

Committee Scope: This Committee shall have primary responsibility for documents or portions of documents covering the construction, installation, testing, performance, and maintenance of hyperbaric and hypobaric facilities for safeguarding staff and occupants of chambers.

Technical Committee on Laboratories (HEA-LAB)
(Chapter 11 and related paragraphs in Chapters 6, 13, 14, 17, and 18)

Susan B. McLaughlin, *Chair*
SBM Consulting, Ltd., IL [U]
Rep. American Society for Healthcare Engineering

James F. Barth, FIREPRO, Incorporated, MA [SE]
John Francis Capron, III, The Cleveland Clinic Foundation, OH [U]
John P. McCabe, U.S. National Institutes of Health, MD [E]
Josephine Simmons, U.S. Department of Health and Human Services, MD [E]
James O. Wear, U.S. Department of Veterans Affairs, AR [U]
Rep. NFPA Health Care Section

Alternates

Carol Jacobson, Ohio State University Medical Center, OH [U]
(Alt. to S. B. McLaughlin)
Judith A. Yost, U.S. Department of Health and Human Services, MD [E]
(Alt. to J. Simmons)

Richard P. Bielen, NFPA Staff Liaison

This list represents the membership at the time the Committee was balloted on the final text of this edition. Since that time, changes in the membership may have occurred. A key to classifications is found at the back of the document.

NOTE: Membership on a committee shall not in and of itself constitute an endorsement of the Association or any document developed by the committee on which the member serves.

Committee Scope: This Committee shall have primary responsibility for documents or portions of documents covering the maintenance of equipment and environment for the purpose of safeguarding patients, visitors, and staff within laboratories in health care facilities.

--`,,```,,,,````-`-`,,`,,`,`,,`---

Copyright National Fire Protection Association
Provided by IHS under license with NFPA
No reproduction or networking permitted without license from IHS
Not for Resale

Technical Committee on Piping Systems (HEA-PIP)
(Chapter 5 and related paragraphs in Chapters 13, 14, 17, 18, and 21)
(Sections in Chapter 5 covering gas systems are submitted to the Technical Committee on Industrial and Medical Gases for concurrence before submittal to the Association for action)

David B. Mohile, *Chair*
Medical Engineering Services, Inc., VA [SE]

Mark W. Allen, Beacon Medical, NC [M]
Christopher Bernecker, H. T. Lyons, Incorporated, PA [IM]
David L. Brittain, PROVAC, OH [M]
Richard E. Cutts, U.S. Air Force, TX [E]
James S. Davidson, Jr., Davidson Associates, DE [SE]
Douglas S. Erickson, American Society for Healthcare Engineering, VI [U]
Rep. American Society for Healthcare Engineering
Peter Esherick, Patient Instrumentation Corporation, PA [SE]
P. L. Fan, American Dental Association, IL [U]
Michael Frankel, Utility Systems Consultants, NJ [SE]
Rep. American Society of Plumbing Engineers
Edward D. Golla TRI/Airtesting, TX [RT]
Burton R. Klein, Burton Klein Associates, MA [SE]
David Eric Lees, Georgetown University Medical Center, DC [C]
Rep. American Society of Anesthesiologists
Michael T. Massey, National ITC Corporation, CA [L]
Richard L. Miller, Medical Gas Technology Inc., NC [SE]
Thomas J. Mraulak, Metro Detroit Plumbing Industry Training Center, MI [L]
Rep. American Society of Sanitary Engineering
Fred C. Quarnstrom, Seattle, WA [U]
Rep. American Dental Association
E. Daniel Shoemaker, Matrx, AZ [M]
Ronald M. Smidt, Carolinas HealthCare System, NC [U]
Rep. NFPA Health Care Section
Edward K. Stevenson, Liberty Mutual Property Insurance Company , MA [I]
Rep. Alliance of American Insurers
Robert M. Sutter, BOC Gases, NJ [M]
Rep. Compressed Gas Association
J. Richard Wagner, Poole & Kent Company, MD [IM]
Rep. Mechanical Contractors Association of America, Inc.
Craig B. Williams, Life Medical Networks Inc., GA [SE]

Alternates

David D. Eastman, Metro Detroit Plumbing Industry Training Center, MI [L]
(Alt. to T. J. Mraulak)
David Esherick, Patient Instrumentation Corporation, PA [SE]
(Alt. to P. Esherick)
Keith Ferrari, Praxair, NC [M]
(Alt. to R. M. Sutter)
James A. Meyer, Pettis Memorial VA Hospital, CA [C]
(Alt. to D. E. Lees)
Curtis L. Mezzic, National ITC Corporation, LA [L]
(Alt. to M.T. Massey)
Daniel N. Miller, Medical Gas Technology Inc., NC [SE]
(Alt. to R. L. Miller)
Kenneth J. Muzal, Liberty Mutual Insurance Company, MA [I]
(Alt. to E. K. Stevenson)
Sharon Stanford, American Dental Association, IL [U]
(Alt. to P. L. Fan)
Christopher Swayze, The Sherman Engineering Company, PA [M]
(Alt. to M. W. Allen)
Dale Woodin, American Society for Healthcare Engineering, IL [U]
(Alt. to D. S. Erickson)

Richard P. Bielen, NFPA Staff Liaison

This list represents the membership at the time the Committee was balloted on the final text of this edition. Since that time, changes in the membership may have occurred. A key to classifications is found at the back of the document.

NOTE: Membership on a committee shall not in and of itself constitute an endorsement of the Association or any document developed by the committee on which the member serves.

Committee Scope: This Committee shall have primary responsibility for documents or portions of documents covering the performance, maintenance, installation, and testing of medical and dental related gas piping systems and medical and dental related vacuum piping systems.

Copyright National Fire Protection Association
Provided by IHS under license with NFPA
No reproduction or networking permitted without license from IHS
Not for Resale

Contents

Chapter 1 Administration **99–** 12
1.1 Scope **99–** 12
1.2 Purpose **99–** 13
1.3 Application **99–** 13
1.4 Equivalency **99–** 13
1.5 Units and Formulas **99–** 13
1.6 Standard Adoption Requirements **99–** 13

Chapter 2 Referenced Publications **99–** 13
2.1 General **99–** 13
2.2 NFPA Publications **99–** 13
2.3 Other Publications **99–** 14

Chapter 3 Definitions **99–** 15
3.1 General **99–** 15
3.2 NFPA Official Definitions **99–** 15
3.3 General Definitions **99–** 15

Chapter 4 Electrical Systems **99–** 22
4.1 Applicability **99–** 22
4.2 Nature of Hazards **99–** 22
4.3 Electrical System Requirements **99–** 22
4.4 Essential Electrical System Requirements — Type 1 ..... **99–** 26
4.5 Essential Electrical System Requirements — Type 2 ..... **99–** 33
4.6 Essential Electrical System Requirements — Type 3 ..... **99–** 35

Chapter 5 Gas and Vacuum Systems **99–** 35
5.1 Level 1 Piped Gas and Vacuum Systems **99–** 35
5.2 Level 2 Piped Gas and Vacuum Systems **99–** 66
5.3 Level 3 Piped Gas and Vacuum Systems **99–** 66

Chapter 6 Environmental Systems **99–** 82
6.1 Applicability **99–** 82
6.2 Nature of Hazards **99–** 82
6.3 Source **99–** 82
6.4 Distribution **99–** 82
6.5 Performance Criteria and Testing. (Reserved) **99–** 83
6.6 Administration **99–** 83

Chapter 7 Materials **99–** 83
7.1 Applicability **99–** 83
7.2 Nature of Hazards **99–** 83
7.3 Source. (Reserved) **99–** 83
7.4 Distribution. (Reserved) **99–** 83
7.5 Performance Criteria and Testing. (Reserved) **99–** 83
7.6 Administration. (Reserved) **99–** 83

Chapter 8 Electrical Equipment **99–** 83
8.1 Applicability **99–** 83
8.2 Nature of Hazards **99–** 83
8.3 Electrical System **99–** 83
8.4 Performance Criteria and Testing **99–** 83
8.5 Administration **99–** 86

Chapter 9 Gas Equipment **99–** 88
9.1 Applicability **99–** 88
9.2 Nature of Hazards **99–** 88
9.3 Cylinder and Container Source **99–** 88
9.4 Cylinder and Container Storage Requirements **99–** 89
9.5 Performance Criteria and Testing **99–** 89
9.6 Administration **99–** 90
9.7 Operation and Management of Cylinders **99–** 91
9.8 Gas/Vacuum Systems Maintenance and Record Keeping **99–** 93
9.9 Policies and Procedures **99–** 93

Chapter 10 Manufacturer Requirements **99–** 93
10.1 Applicability **99–** 93
10.2 Patient-Care–Related Electrical Appliances **99–** 93

Chapter 11 Laboratories **99–**102
11.1 Applicability **99–**102
11.2 Nature of Hazards **99–**102
11.3 Structure **99–**103
11.4 Equipment **99–**103
11.5 Fire Protection **99–**103
11.6 Emergency Shower **99–**103
11.7 Flammable and Combustible Liquids **99–**104
11.8 Maintenance and Inspection **99–**104
11.9 Transfer of Gases **99–**105
11.10 Laboratory Gas Cylinder Storage for Nonpiped Use **99–**105
11.11 Piped Gas Systems **99–**106

Chapter 12 Health Care Emergency Management **99–**106
12.1 Applicability **99–**106
12.2 Responsibilities **99–**106
12.3 General Requirements **99–**107

Chapter 13 Hospital Requirements **99–**107
13.1 Applicability **99–**107
13.2 Responsibilities **99–**107
13.3 General Requirements **99–**108
13.4 Specific Area Requirements **99–**109

--`,,```,,,,````-`-`,,`,,`,`,,`---

Copyright National Fire Protection Association
Provided by IHS under license with NFPA
No reproduction or networking permitted without license from IHS
Not for Resale

Chapter 14 Other Health Care Facilities **99**–111
14.1 Applicability **99**–111
14.2 Responsibilities **99**–111
14.3 General Requirements **99**–111
14.4 Specific Area Requirements **99**–111

Chapter 15 Reserved **99**–112

Chapter 16 Reserved **99**–112

Chapter 17 Nursing Home Requirements **99**–112
17.1 Applicability **99**–112
17.2 Responsibilities **99**–112
17.3 General Requirements **99**–112

Chapter 18 Limited Care Facility Requirements ... **99**–113
18.1 Applicability **99**–113
18.2 Responsibilities **99**–113
18.3 General Requirements **99**–113

Chapter 19 Electrical and Gas Equipment for Home Care **99**–113
19.1 Applicability **99**–113
19.2 Responsibilities **99**–113
19.3 Equipment **99**–113

Chapter 20 Hyperbaric Facilities **99**–114
20.1 Applicability **99**–114
20.2 Construction and Equipment **99**–114
20.3 Administration and Maintenance **99**–121

Chapter 21 Freestanding Birthing Centers **99**–124
21.1 Applicability **99**–124
21.2 Responsibilities. (Reserved) **99**–124
21.3 General Requirements **99**–124

Annex A Explanatory Material **99**–124

Annex B Nature of Hazards **99**–171

Annex C Additional Explanatory Notes to Chapters 1–20 ..... **99**–177

Annex D The Safe Use of High-Frequency Electricity in Health Care Facilities **99**–206

Annex E Flammable Anesthetizing Locations **99**–219

Annex F Sample Ordinance Adopting NFPA 99 .... **99**–234

Annex G Informational References **99**–235

Index **99**–239

Copyright National Fire Protection Association
Provided by IHS under license with NFPA
No reproduction or networking permitted without license from IHS
Not for Resale

NFPA 99

Standard for

Health Care Facilities

2005 Edition

IMPORTANT NOTE: This NFPA document is made available for use subject to important notices and legal disclaimers. These notices and disclaimers appear in all publications containing this document and may be found under the heading "Important Notices and Disclaimers Concerning NFPA Documents." They can also be obtained on request from NFPA or viewed at www.nfpa.org/disclaimers.

NOTICE: An asterisk (*) following the number or letter designating a paragraph indicates that explanatory material on the paragraph can be found in Annex A.

Changes other than editorial are indicated by a vertical rule beside the paragraph, table, or figure in which the change occurred. These rules are included as an aid to the user in identifying changes from the previous edition. Where one or more complete paragraphs have been deleted, the deletion is indicated by a bullet (•) between the paragraphs that remain.

A reference in brackets [ ] following a section or paragraph indicates material that has been extracted from another NFPA document. As an aid to the user, the complete title and edition of the source documents for mandatory extracts are given in Chapter 2 and those for nonmandatory extracts are given in Annex G. Editorial changes to extracted material consist of revising references to an appropriate division in this document or the inclusion of the document number with the division number when the reference is to the original document. Requests for interpretations or revisions of extracted text shall be sent to the technical committee responsible for the source document.

Information on referenced publications can be found in Chapter 2 and Annex G.

Further explanatory information on Chapters 1 through 20 can be found in Annex C.

Chapter 1 Administration

1.1 Scope.

1.1.1 The scope of this document is to establish criteria to minimize the hazards of fire, explosion, and electricity in health care facilities providing services to human beings.

1.1.2 Annex D covers principles of design and use of electrical and electronic appliances generating high-frequency currents for medical treatment in hospitals, clinics, ambulatory care facilities, and dental offices, whether fixed or mobile.

1.1.2.1 Areas Not Addressed. The following areas are not addressed:

(1) Communication equipment, resuscitation equipment (e.g., defibrillators), or physiological stimulators (e.g., used for anesthesia, acupuncture)
(2) Experimental or research apparatus built to order, or under development, provided such apparatus is used under qualified supervision and provided the builder demonstrates to the authority having jurisdiction that the apparatus has a degree of safety equivalent to that described in Annex D

1.1.3 Annex E retains the established requirements that would be necessary for the safe use of flammable inhalation anesthetics should the use of this type of anesthetic be reinstituted.

1.1.4 Chapter 4, Electrical Systems, covers the performance, maintenance, and testing of electrical systems (both normal and essential) used within health care facilities.

1.1.4.1 Areas Not Addressed in Chapter 4. The following areas are not addressed in NFPA 99, but are addressed in other NFPA documents:

(1) Specific requirements for wiring and installation on equipment are covered in NFPA 70, *National Electrical Code*.
(2) Requirements for illumination and identification of means of egress in health care facilities are covered in NFPA *101*, *Life Safety Code*.
(3) Requirements for fire protection signaling systems.
(4) Requirements for fire pumps are covered in NFPA 20, *Standard for the Installation of Stationary Pumps for Fire Protection*, except that the alternate source of power shall be permitted to be the essential electrical system.
(5) Requirements for the installation of stationary engines and gas turbines are covered in NFPA 37, *Standard for the Installation and Use of Stationary Combustion Engines and Gas Turbines*.

1.1.5 Chapter 5, Gas and Vacuum Systems, covers the performance, maintenance, installation, and testing of the following:

(1) Nonflammable medical gas systems with operating pressures below a gauge pressure of 2068 kPa (300 psi)
(2) Vacuum systems used within health care facilities
(3) Waste anesthetic gas disposal (WAGD) systems, also referred to as scavenging
(4) Manufactured assemblies that are intended for connection to the medical gas, vacuum, or WAGD systems (also referred to as scavenging)

1.1.5.1 Areas Not Addressed in Chapter 5. Requirements for portable compressed gas systems are covered in Chapter 9, Gas Equipment.

1.1.6 Chapter 6, Environmental Systems, covers the performance, maintenance, and testing of the environmental systems used within health care facilities.

1.1.7 Chapter 7, Materials, covers the hazards associated with the use of flammable and combustible materials used within health care facilities.

1.1.8 Chapter 8, Electrical Equipment, covers the performance, maintenance, and testing of electrical equipment used within health care facilities.

1.1.9 Chapter 9, Gas Equipment, covers the performance, maintenance, and testing of gas equipment used within health care facilities.

1.1.10 Chapter 10, Manufacturer Requirements, covers the performance, maintenance, and testing, with regard to safety, required of manufacturers of equipment used within health care facilities.

1.1.11 Chapter 11, Laboratories, establishes criteria to minimize the hazards of fire and explosions in laboratories, as defined in Chapter 3.

1.1.11.1 Areas Not Addressed in Chapter 11. Subsection 1.1.11 is not intended to cover hazards resulting from any of the following:

Copyright National Fire Protection Association
Provided by IHS under license with NFPA
No reproduction or networking permitted without license from IHS
Not for Resale

(1) Chemicals
(2) Radioactive materials
(3)*Biological materials that will not result in fires or explosions

1.1.12* Chapter 12, Health Care Emergency Management, establishes minimum criteria for health care facility emergency management in the development of a program for effective disaster preparedness, response, mitigation, and recovery.

1.1.13 Chapter 13, Hospital Requirements, addresses safety requirements of hospitals.

1.1.14 Chapter 14, Other Health Care Facilities, addresses safety requirements for facilities, or portions thereof, that provide diagnostic and treatment services to patients in health care facilities. Requirements for specific health care facilities are addressed in the following chapters:

(1) Hospitals — Chapter 13
(2) Nursing homes — Chapter 17
(3) Limited care facilities — Chapter 18

1.1.15 Reserved.

1.1.16 Reserved.

1.1.17 Chapter 17, Nursing Home Requirements, addresses safety requirements of nursing homes.

1.1.18 Chapter 18, Limited Care Facility Requirements, covers safety requirements of limited care facilities.

1.1.19 Chapter 19, Electrical and Gas Equipment for Home Care, addresses the requirements for the safe use of electrical and gas equipment used for home care medical treatment.

1.1.20* Chapter 20, Hyperbaric Facilities, covers the recognition of and protection against hazards of an electrical, explosive, or implosive nature, as well as fire hazards associated with hyperbaric chambers and associated facilities that are used, or intended to be used, for medical applications and experimental procedures at gauge pressures from 0 to 690 kPa (0 to 100 psi). Chapter 20 applies to both single- and multiple-occupancy hyperbaric chambers; to animal chambers, the size of which precludes human occupancy; and to those in which the chamber atmosphere contains an oxygen partial pressure greater than an absolute pressure of 21.3 kPa (3.09 psi) (0.21 atmospheres).

1.1.21 Chapter 21, Freestanding Birthing Centers, addresses the requirements for the safe use of electrical and gas equipment, and for electrical, gas, and vacuum systems used for the delivery and care of infants in freestanding birthing centers.

1.2 Purpose.

1.2.1 The purpose of this standard is to provide minimum requirements for the performance, maintenance, testing, and safe practices for facilities, material, equipment, and appliances, including other hazards associated with the primary hazards.

1.3 Application.

1.3.1 This document shall apply to all health care facilities.

1.3.2 Construction and equipment requirements shall be applied only to new construction and new equipment, except as modified in individual chapters. Only the altered, renovated, or modernized portion of an existing system or individual component shall be required to meet the installation and equipment requirements stated in this standard. If the alteration, renovation, or modernization adversely impacts existing performance requirements of a system or component, additional upgrading shall be required.

1.3.3 Chapters 13 through 19 specify the conditions under which the requirements of Chapters 4 through 12 shall apply in Chapters 13 through 19.

1.3.4 This document is intended for use by those persons involved in the design, construction, inspection, and operation of health care facilities and in the design, manufacture, and testing of appliances and equipment used in patient care areas of health care facilities. Nonflammable piped medical gases covered by this document include, but are not limited to, oxygen, nitrogen, nitrous oxide, medical air, carbon dioxide, and helium.

1.4 Equivalency.

1.4.1 The authority having jurisdiction for the enforcement of this document shall be permitted to grant exceptions to its requirements.

1.4.2 Nothing in this standard is intended to prevent the use of systems, methods, or devices of equivalent or superior quality, strength, fire resistance, effectiveness, durability, and safety to those prescribed by this standard. Technical documentation shall be submitted to the authority having jurisdiction to demonstrate equivalency. The system, method, or device shall be approved for the intended purpose by the authority having jurisdiction.

1.5 Units and Formulas.

1.5.1* Primary units will be trade units, secondary will be the conversion. Although it is common practice for medical appliances to have metric units on their dials, gauges, and controls, many components of systems within the scope of this document, which are manufactured and used in the United States, employ nonmetric dimensions. Since these dimensions (such as nominal pipe sizes) are not established by the National Fire Protection Association, the Technical Correlating Committee on Health Care Facilities cannot independently change them. Accordingly, this document uses dimensions that are presently in common use by the building trades in the United States.

1.6 Standard Adoption Requirements.

1.6.1 The effective date of application of any provision of this document is not determined by the National Fire Protection Association. All questions related to applicability shall be directed to the authority having jurisdiction.

1.6.2 Enforcement. This standard shall be administered and enforced by the authority having jurisdiction designated by the governing authority. *(See Annex F for a sample wording for enabling legislation.)*

Chapter 2 Referenced Publications

2.1 General. The documents or portions thereof listed in this chapter are referenced within this standard and shall be considered part of the requirements of this document.

2.2 NFPA Publications. National Fire Protection Association, 1 Batterymarch Park, Quincy, MA 02169-7471.

NFPA 10, *Standard for Portable Fire Extinguishers,* 2002 edition.

NFPA 13, *Standard for the Installation of Sprinkler Systems,* 2002 edition.

NFPA 30, *Flammable and Combustible Liquids Code,* 2003 edition.

NFPA 37, *Standard for the Installation and Use of Stationary Combustion Engines and Gas Turbines,* 2002 edition.

--`,,```,,,,````-`-`,,`,,`,`,,`---

Copyright National Fire Protection Association
Provided by IHS under license with NFPA
No reproduction or networking permitted without license from IHS
Not for Resale

NFPA 45, *Standard on Fire Protection for Laboratories Using Chemicals,* 2004 edition.

NFPA 50, *Standard for Bulk Oxygen Systems at Consumer Sites,* 2001 edition.

NFPA 51, *Standard for the Design and Installation of Oxygen–Fuel Gas Systems for Welding, Cutting, and Allied Processes,* 2002 edition.

NFPA 54, *National Fuel Gas Code,* 2002 edition.

NFPA 55, *Standard for the Storage, Use, and Handling of Compressed Gases and Cryogenic Fluids in Portable and Stationary Containers, Cylinders, and Tanks,* 2005 edition.

NFPA 58, *Liquefied Petroleum Gas Code,* 2004 edition.

NFPA 70, *National Electrical Code®,* 2002 edition.

NFPA 72®, National Fire Alarm Code®, 1999 edition.

NFPA 99B, *Standard for Hypobaric Facilities,* 2005 edition.

NFPA *101®, Life Safety Code®,* 2003 edition.

NFPA 110, *Standard for Emergency and Standby Power Systems,* 2002 edition.

NFPA 111, *Standard on Stored Electrical Energy Emergency and Standby Power Systems,* 2005 edition.

NFPA 220, *Standard on Types of Building Construction,* 1999 edition.

NFPA 255, *Standard Method of Test of Surface Burning Characteristics of Building Materials,* 2000 edition.

NFPA 326, *Standard for the Safeguarding of Tanks and Containers for Entry, Cleaning, or Repair,* 1999 edition.

NFPA 701, *Standard Methods of Fire Tests for Flame Propagation of Textiles and Films,* 2004 edition.

NFPA 704, *Standard System for the Identification of the Hazards of Materials for Emergency Response,* 2001 edition.

NFPA 1600, *Standard on Disaster/Emergency Management and Business Continuity Programs,* 2004 edition.

2.3 Other Publications.

2.3.1 ANSI Publication. American National Standards Institute, Inc., 22 West 43rd Street, 4th floor, New York, NY 10036.

ANSI C84.1, *Electric Power Systems and Equipment — Voltage Ratings*, 1995.

ANSI Z66.1, *Specifications for Paints and Coatings Accessible to Children to Minimize Dry Film Toxicity*, 1964.

ANSI/NEMA WD 6, *Wiring Devices — Dimensional Requirements*, 2002.

2.3.2 ASME Publications. American Society of Mechanical Engineers, Three Park Avenue, New York, NY 10016-5990.

ANSI/ASME PVHO-1-1990, *Safety Standard for Pressure Vessels for Human Occupancy.*

ASME *Boiler and Pressure Vessel Code*, Sections VIII and IX, 2001.

ASME B1.20.1, *Pipe Threads, General Purpose*, 2001.

ANSI/ASME B16.50, *Wrought Copper and Copper Alloy Braze-Joint Pressure Fittings*, 2001.

ASME B31.3, *Pressure Process Piping*, 2002.

ASME B40.100, *Pressure Gauges and Gauge Attachments*, 1998.

ASME B16.22, *Wrought Copper and Copper Alloy Solder-Joint Pressure Fittings*, 2001.

2.3.3 ASSE Publications. American Society of Sanitary Engineering, 28901 Clemens Road, Suite 100, Westlake, OH 44145.

ASSE 6010, *Professional Qualifications Standard for Medical Gas Systems Installers*, 2001.

ASSE 6030, *Professional Qualifications Standard for Medical Gas Systems Verifiers*, 2001.

2.3.4 ASTM Publications. American Society for Testing and Materials, 100 Barr Harbor Drive, West Conshohocken, PA 19428-2959.

ASTM A 53, *Standard Specification for Pipe, Steel, Black and Hot-Dipped, Zinc-Coated, Welded and Seamless*, 1994.

ASTM B 32, *Standard Specification for Solder Metal*, 1996.

ASTM B 88, *Standard Specification for Seamless Copper Water Tube*, 2002.

ASTM B 280, *Standard Specification for Seamless Copper Tubing for Air Conditioning and Refrigeration Field Service*, 2002.

ASTM B 819, *Standard Specification for Seamless Copper Tube for Medical Gas Systems*, 2000.

ASTM B 828, *Standard Practice for Making Capillary Joints by Soldering of Copper and Copper Alloy Tube and Fittings*, 2002.

ASTM D 5, *Standard Test Method for Penetration of Bituminous Materials*, 1997.

ASTM D 2855, *Standard Practice for Making Solvent-Cemented Joints with Poly(Vinyl Chloride) (PVC) Pipe and Fittings*, 1996 (2002).

ASTM D 2863, *Standard Test Method for Measuring the Minimum Oxygen Concentration to Support Candle-like Combustion of Plastics (Oxygen Index)* (ANSI D2863), 1997.

ASTM E 136, *Standard Test Method for Behavior of Materials in a Vertical Tube Furnace at 750°C*, 1998.

2.3.5 AWS Publications. American Welding Society, 550 N.W. LeJeune Road, Miami, FL 33126.

ANSI/AWS A5.8, *Specification for Filler Metals for Brazing and Braze Welding*, 1992.

AWS B2.2, *Standard for Brazing Procedure and Performance Qualification*, 1991.

2.3.6 CDA Publication. Copper Development Association Inc., 260 Madison Avenue, New York, NY 10016.

Copper Tube Handbook.

2.3.7 CGA Publications. Compressed Gas Association, 4221 Walney Road, 5th Floor, Chantilly, VA 20151-2923.

GCA C-7, *Guide to the Preparation of Precautionary Labeling and Marking of Compressed Gas Containers*, 2004.

CGA G-4, *Oxygen*, 1996.

CGA G-4.1, *Cleaning Equipment for Oxygen Service*, 2004.

CGA G-6.1, *Standard for Insulated Carbon Dioxide Systems at Consumer Sites*, 2002.

CGA G-6.5, *Standard for Small, Stationary Insulated Carbon Dioxide Supply Systems*, 2001.

CGA G-8.1, *Standard for Nitrous Oxide Systems at Consumer Sites*, 1990.

CGA M-1, *Guide for Medical Gas Installations at Consumer Sites*, 2003.

CGA O2-DIR, *Directory of Cleaning Agents for Oxygen Service*, Edition 4.

CGA P-2.5, *Transfilling of High Pressure Gaseous Oxygen to be Used for Respiration*, 2000.

Copyright National Fire Protection Association
Provided by IHS under license with NFPA
No reproduction or networking permitted without license from IHS
Not for Resale

CGA P-2.6, *Transfilling of Liquid Oxygen to be Used for Respiration*, 1995.

CGA P-2.7, *Guide for the Safe Storage, Handling, and Use of Portable Liquid Oxygen Systems in Healthcare Facilities*, 2000.

CGA V-1, *Compressed Gas Association Standard for Compressed Gas Cylinder Valve Outlet and Inlet Connections* (ANSI B57.1), 2003.

CGA V-5, *Diameter-Index Safety System (Noninterchangeable Low Pressure Connections for Medical Gas Applications)*, 2000.

CGA V-6, *Standard Cryogenic Liquid Transfer Connection*, 2000.

2.3.8 IEC Publication. Electrotechnical Commission, 3 rue de Varembé, P.O. Box 131, CH-1211 Geneva 20, Switzerland.

IEC 60601-1-2, *Medical Electrical Equipment — Part 1–2: General Requirements for Safety — Collateral Standard: Electromagnetic Compatibility — Requirements and Tests*, 2004.

2.3.9 ISA Publications. The Instrumentation, Systems, and Automation Society (ISA), 67 Alexander Drive, Research Triangle Park, NC 27709.

ANSI/ISA S-7.0.01, *Quaility Standard for Instrument Air*, 1996.

RP 12.6, *Installation of Intrinsically Safe Systems in Hazardous Locations*, 1995.

2.3.10 MSS Publications. Manufacturer's Standardization Society of the Valve and Fittings Industry, Inc., 127 Park Street NE, Vienna, VA 22180.

SP-58, *Pipe Hangers and Supports — Materials, Design, and Manufacture*, 2002.

SP-69, *Pipe Hangers and Supports — Selection and Application*, 2002.

2.3.11 UL Publication. Underwriters Laboratories Inc., 333 Pfingsten Road, Northbrook, IL 60062-2096.

UL 94, *Test for Flammability of Plastic Materials for Parts in Devices and Appliances*, 2001.

2.3.12 U.S. Government Publications. Document Automation and Production Service (DAPS), Building 4D, 700 Robbins Avenue, Philadelphia, PA 19111-5094, www.dodssp.daps.mil.

MIL-Standard 104C, *Limit for Electrical Insulation Color.*

U.S. Government Commercial Standard 223-59, *Casters, Wheels, and Glides for Hospital Equipment.*

Chapter 3 Definitions

3.1 General. The definitions contained in this chapter shall apply to the terms used in this standard. Where terms are not defined in this chapter or within another chapter, they shall be defined using their ordinarily accepted meanings within the context in which they are used. *Merriam-Webster's Collegiate Dictionary*, 11th edition, shall be the source for the ordinarily accepted meaning.

3.2 NFPA Official Definitions.

3.2.1* Approved. Acceptable to the authority having jurisdiction.

3.2.2* Authority Having Jurisdiction (AHJ). An organization, office, or individual responsible for enforcing the requirements of a code or standard, or for approving equipment, materials, an installation, or a procedure.

3.2.3* Code. A standard that is an extensive compilation of provisions covering broad subject matter or that is suitable for adoption into law independently of other codes and standards.

3.2.4 Guide. A document that is advisory or informative in nature and that contains only nonmandatory provisions. A guide may contain mandatory statements such as when a guide can be used, but the document as a whole is not suitable for adoption into law.

3.2.5 Labeled. Equipment or materials to which has been attached a label, symbol, or other identifying mark of an organization that is acceptable to the authority having jurisdiction and concerned with product evaluation, that maintains periodic inspection of production of labeled equipment or materials, and by whose labeling the manufacturer indicates compliance with appropriate standards or performance in a specified manner.

3.2.6* Listed. Equipment, materials, or services included in a list published by an organization that is acceptable to the authority having jurisdiction and concerned with evaluation of products or services, that maintains periodic inspection of production of listed equipment or materials or periodic evaluation of services, and whose listing states that either the equipment, material, or service meets appropriate designated standards or has been tested and found suitable for a specified purpose.

3.2.7 Shall. Indicates a mandatory requirement.

3.2.8 Should. Indicates a recommendation or that which is advised but not required.

3.2.9 Standard. A document, the main text of which contains only mandatory provisions using the word "shall" to indicate requirements and which is in a form generally suitable for mandatory reference by another standard or code or for adoption into law. Nonmandatory provisions shall be located in an appendix or annex, footnote, or fine-print note and are not to be considered a part of the requirements of a standard.

3.3 General Definitions.

3.3.1 ACFM. Actual cubic feet per minute. (PIP)

3.3.2 Adiabatic Heating. The heating of a gas caused by its compression. (HYP)

3.3.3 Aerosol. An intimate mixture of a liquid or a solid in a gas; the liquid or solid, called the dispersed phase, is uniformly distributed in a finely divided state throughout the gas, which is the continuous phase or dispersing medium. (GAS)

3.3.4 Alarm Systems.

3.3.4.1 ***Area Alarm System.*** A warning system within an area of use that provides continuous visible and audible surveillance of Level 1 and Level 2 medical gas and vacuum systems. (PIP)

3.3.4.2 ***Level 3 Alarm System.*** A warning system within an area of use that provides continuous visible and audible surveillance of Level 3 medical gas systems. (PIP)

3.3.4.3 ***Local Alarm System.*** A warning system that provides continuous visible and audible surveillance of medical gas and vacuum system source equipment at the equipment site. (PIP)

3.3.4.4 ***Master Alarm System.*** A warning system that monitors the operation and condition of the source of supply, the reserve source (if any), and the pressure in the main lines of each medical gas and vacuum piping system. (PIP)

Copyright National Fire Protection Association
Provided by IHS under license with NFPA
No reproduction or networking permitted without license from IHS
Not for Resale

3.3.5 Alternate Power Source. One or more generator sets, or battery systems where permitted, intended to provide power during the interruption of the normal electrical service; or the public utility electrical service intended to provide power during interruption of service normally provided by the generating facilities on the premises. (ELS)

3.3.6 Ambulatory Health Care Center. A building or portion thereof used to provide services or treatment simultaneously to four or more patients that (1) provides, on an outpatient basis, treatment for patients that renders the patients incapable of taking action for self-preservation under emergency conditions without the assistance of others; or (2) provides, on an outpatient basis, anesthesia that renders the patients incapable of taking action for self-preservation under emergency conditions without the assistance of others. (ADM)

3.3.7 Ampacity. The current, in amperes, that a conductor can carry continuously under the conditions of use without exceeding its temperature rating. (ELS)

3.3.8 Anesthetic. As used in this standard, applies to any inhalation agent used to produce relative analgesia or general anesthesia. (GAS)

3.3.9* Anesthetizing Location. Any area of a facility that has been designated to be used for the administration of nonflammable inhalation anesthetic agents in the course of examination or treatment, including the use of such agents for relative analgesia. *(See also 3.3.158, Relative Analgesia.)* (GAS)

3.3.10 Anoxia. A state of markedly inadequate oxygenation of the tissues and blood, of more marked degree than hypoxia. (HYP)

3.3.11 Appliance. Utilization equipment, generally other than industrial, normally built in standardized sizes or types, that is installed or connected as a unit to perform one or more functions. (ELE)

3.3.12* Applicator. A means of applying high-frequency energy to a patient other than by an electrically conductive connection. (ELE)

3.3.13 Area of Administration. Any point within a room within 4.3 m (15 ft) of oxygen equipment or an enclosure containing or intended to contain an oxygen-enriched atmosphere. (GAS)

3.3.14* Atmosphere. The pressure exerted by, and gaseous composition of, an environment. (HYP)

3.3.14.1 ***Ambient Atmosphere.*** The pressure and composition of the environment surrounding a chamber. (HYP)

3.3.14.2 ***Atmosphere Absolute (ATA).*** The pressure of the earth's atmosphere, 760.0 mmHg, 101.325 kPa, or 14.7 psia. Two ATA = two atmospheres. *(See also 3.3.14, Atmosphere.)* (HYP)

3.3.14.3* ***Atmosphere of Increased Burning Rate.*** Any atmosphere containing a percentage of oxygen or oxygen and nitrous oxide greater than the quotient of 23.45 divided by the square root of the total pressure in atmospheres. (HYP)

3.3.14.4 ***Chamber Atmosphere.*** The environment inside a chamber. (HYP)

3.3.15 Automatic. Providing a function without the necessity of human intervention. (ELS)

3.3.16* Bends. Decompression sickness; caisson worker's disease. (HYP)

3.3.17 Branch Circuit. The circuit conductors between the final overcurrent device protecting the circuit and the outlet(s). [**70,** 2005] (ELS)

3.3.18 Branch Line. See 3.3.145, Piping.

3.3.19 Bulk System. An assembly of equipment, such as storage containers, pressure regulators, pressure relief devices, vaporizers, manifolds, and interconnecting piping, that terminates at the source valve of oxygen or 1452 kg (3200 lb) of nitrous oxide including unconnected reserves on the site. (PIP)

3.3.19.1 ***Bulk Nitrous Oxide System.*** An assembly of equipment as described in the definition of bulk oxygen system that has a storage capacity of more than 3200 lb (1452 kg) [approximately 28,000 ft^3 (793 m^3) (at normal temperature and pressure)] of nitrous oxide. (PIP)

3.3.19.2* ***Bulk Oxygen System.*** An assembly of equipment such as oxygen storage containers, pressure regulators, pressure relief devices, vaporizers, manifolds, and interconnecting piping that has a storage capacity of more than 566 m^3 (20,000 ft^3) of oxygen (at normal temperature and pressure) including unconnected reserves on hand at the site. (PIP)

3.3.20 Cold Room. A refrigerated area large enough for personnel to enter. (LAB)

3.3.21 Combustible. Capable of undergoing combustion. (GAS)

3.3.22* Combustible Liquid. A liquid having a flash point at or above 37.8°C (100°F). Combustible liquids shall be subdivided as follows: (a) Class II liquids shall include those having flash points at or above 37.8°C (100°F) and below 60°C (140°F); (b) Class IIIA liquids shall include those having flash points at or above 60°C (140°F) and below 93°C (200°F); (c) Class IIIB liquids shall include those having flash points at or above 93°C (200°F). (LAB)

3.3.23* Combustion. A chemical process (such as oxidation) accompanied by the rapid evolution of heat and light. (GAS)

3.3.24 Combustion Products. The gases, volatilized liquids and solids, particulate matter, and ash generated by combustion. (GAS)

3.3.25 Container. A low-pressure, vacuum-insulated vessel containing gases in liquid form. (GAS)

3.3.26 Critical Branch. A subsystem of the emergency system consisting of feeders and branch circuits supplying energy to task illumination, special power circuits, and selected receptacles serving areas and functions related to patient care and that are connected to alternate power sources by one or more transfer switches during interruption of normal power source. (ELS)

3.3.27 Critical Care Area. See 3.3.138, Patient Care Area.

3.3.28 Critical Equipment. That equipment essential to the safety of the occupants of the facility. (HYP)

3.3.29 Critical System. A system of feeders and branch circuits in nursing homes and custodial care facilities arranged for connection to the alternate power source to restore service to certain critical receptacles, task illumination, and equipment. (ELS)

3.3.30 Cylinder. A supply tank containing high-pressure gases or gas mixtures at pressures that can be in excess of 2000 psi gauge (13.8 kPa gauge). (GAS)

Copyright National Fire Protection Association
Provided by IHS under license with NFPA
No reproduction or networking permitted without license from IHS
Not for Resale

3.3.31 Decompression Sickness. A syndrome due to evolved gas in the tissues resulting from a reduction in ambient pressure. (HYP)

3.3.32 Detonation. An exothermic reaction wherein the reaction propagates through the unreacted material at a rate exceeding the velocity of sound, hence the explosive noise. (GAS)

3.3.33* Direct Electrical Pathway to the Heart. An externalized conductive pathway, insulated except at its ends, one end of which is in direct contact with heart muscle while the other is outside the body and is accessible for inadvertent or intentional contact with grounded objects or energized, ground-referenced sources. (ELE)

3.3.34* Disaster. Within the context of this document, a disaster is defined as any unusual occurrence or unforeseen situation that seriously overtaxes or threatens to seriously overtax the routine capabilities of a health care facility. (HCE)

3.3.35 D.I.S.S. Connector. A system of noninterchangeable medical gas and vacuum connectors complying with CGA V-5, *Diameter-Index Safety System (Noninterchangeable Low Pressure Connections for Medical Gas Applications).* (PIP)

3.3.36* Double-Insulated Appliances. Appliances where the primary means of protection against electrical shock is not grounding. The primary means is by the use of combinations of insulation and separation spacings in accordance with an approved standard. (ELE)

3.3.37 Electrical Life Support Equipment. Electrically powered equipment whose continuous operation is necessary to maintain a patient's life. (ELS)

3.3.38 Electrode. An electrically conductive connection to a patient. (ELE)

3.3.38.1 ***Active Electrode.*** An electrode intended to generate a surgical or physiological effect at its point of application to the patient. (ELE)

3.3.38.2 ***Bipolar Electrode.*** An electrode consisting of adjacent contacts (e.g., the two legs of a forceps) such that the current passes between the pair of contacts generating the intended effect. (ELE)

3.3.38.3* ***Dispersive Electrode.*** An electrode, intended to complete the electrical path between patient and appliance and at which no surgical effect is intended. (ELE)

3.3.39 Emergency Management. The act of developing procedures and plans to create effective preparedness, mitigation, response, and recovery during a disaster affecting a health care facility. (HCE)

3.3.40 Emergency Oxygen Supply Connection. An assembly of equipment which permits a gas supplier to make a temporary connection to supply oxygen to a building which has had its normal source of oxygen disconnected. (PIP)

3.3.41 Emergency System. A system of circuits and equipment intended to supply alternate power to a limited number of prescribed functions vital to the protection of life and safety. (ELS)

3.3.42 Equipment Grounding Bus. A grounding terminal bus in the feeder circuit of the branch circuit distribution panel that serves a particular area. (ELE)

3.3.43 Equipment System. A system of feeders and branch circuits arranged for delayed, automatic, or manual connection the alternate power source and that serves primarily 3-phase power equipment. (ELS)

3.3.44 Essential Electrical System. A system comprised of alternate sources of power and all connected distribution systems and ancillary equipment, designed to ensure continuity of electrical power to designated areas and functions of a health care facility during disruption of normal power sources, and also to minimize disruption within the internal wiring system. (ELS)

3.3.45 Evacuation — Waste Gas. See 3.3.184, Waste Anesthetic Gas Disposal.

3.3.46 Exposed Conductive Surfaces. Those surfaces that are capable of carrying electric current and that are unprotected, uninsulated, unenclosed, or unguarded, permitting personal contact. (ELE)

3.3.47* Failure. An incident that increases the hazard to personnel or patients or that affects the safe functioning of electric appliances or devices. (ELE)

3.3.48 Fault Current. A current in an accidental connection between an energized and a grounded or other conductive element resulting from a failure of insulation, spacing, or containment of conductors. (ELS)

3.3.49 Feeder. All circuit conductors between the service equipment, the source of a separately derived system, or other power supply source and the final branch-circuit overcurrent device. (ELS)

3.3.50* Flame Resistant. The property of a material that passes the small-scale test in NFPA 701, *Standard Methods of Fire Tests for Flame Propagation of Textiles and Films.* (HYP)

3.3.51* Flammable. A combustible that is capable of easily being ignited and rapidly consumed by fire. (LAB)

3.3.52 Flammable Gas. Any substance that exists in the gaseous state at normal atmospheric temperature and pressure and is capable of being ignited and burned when mixed with proper proportion of air, oxygen, or other oxidizers. (HYP)

3.3.53 Flammable Liquid. A liquid that has a closed-cup flash point that is below 37.8°C (100°F) and a maximum vapor pressure of 2068 mm Hg (40 psi absolute) at 37.8°C (100°F). (LAB)

3.3.54* Flash Point. The minimum temperature at which a liquid gives off vapor in sufficient concentration to form an ignitable mixture with air near the surface of the liquid within the vessel, as specified by appropriate test procedures and apparatus. (LAB)

3.3.55 Flow-Control Valve. A valve, usually a needle valve, that precisely controls flow of gas. (GAS)

3.3.56 Flowmeter. A device for measuring volumetric flow rates of gases and liquids. (GAS)

3.3.56.1 ***Pressure Compensated Flowmeter.*** A flowmeter indicating accurate flow of gas whether the gas is discharged into ambient pressure or into a system at nonambient pressure. (GAS)

3.3.57 Freestanding Birthing Center. A facility in which low-risk births are expected following normal, uncomplicated pregnancies, and in which professional midwifery care is provided to women during pregnancy, birth, and postpartum. (ADM)

3.3.58* Frequency. The number of oscillations, per unit time, of a particular current or voltage waveform. The unit of frequency is the hertz. (ELE)

Copyright National Fire Protection Association
Provided by IHS under license with NFPA
No reproduction or networking permitted without license from IHS
Not for Resale

3.3.59* Fume Hood. An enclosure designed to draw air inward by means of mechanical ventilation. (LAB)

3.3.60 Gas-Powered System. A Level 3 gas distribution system comprised of component parts including but not limited to cylinders, manifolds, air compressor, motor, receivers, controls, filters, dryers, valves, and piping that delivers compressed air or nitrogen at pressures less than 1100 kPa (less than 160 psi) gauge to power devices (e.g., hand pieces, syringes, cleaning devices) as a power source. (PIP)

3.3.61 General Care Area. See 3.3.138, Patient Care Area.

3.3.62 Governing Body. The person or persons who have the overall legal responsibility for the operation of a health care facility. (ADM)

3.3.63 Ground-Fault Circuit Interrupter (GFCI). A device intended for the protection of personnel that functions to deenergize a circuit or portion thereof within an established period of time when a current to ground exceeds some predetermined value that is less than that required to operate the overcurrent protective device of the supply circuit. (ELS)

3.3.64 Grounding. See 3.3.65, Grounding System.

3.3.65* Grounding System. A system of conductors that provides a low-impedance return path for leakage and fault currents. (ELS)

3.3.66 Hazard Current. For a given set of connections in an isolated power system, the total current that would flow through a low impedance if it were connected between either isolated conductor and ground. (ELS)

3.3.66.1 ***Fault Hazard Current.*** The hazard current of a given isolated power system with all devices connected except the line isolation monitor. (ELS)

3.3.66.2 ***Monitor Hazard Current.*** The hazard current of the line isolation monitor alone. (ELS)

3.3.66.3 ***Total Hazard Current.*** The hazard current of a given isolated system with all devices, including the line isolation monitor, connected. (ELS)

3.3.67* Hazardous Chemical. A chemical with one or more of the following hazard ratings as defined in NFPA 704, *Standard System for the Identification of the Hazards of Materials for Emergency Response:* Health — 2, 3, or 4; Flammability — 2, 3, or 4; Reactivity — 2, 3, or 4. (LAB)

3.3.68* Health Care Facilities. Buildings or portions of buildings in which medical, dental, psychiatric, nursing, obstetrical, or surgical care are provided. (ADM)

3.3.69 Home Care. Medical services (equipment) provided in residential occupancies. (ADM)

3.3.70 Hospital. A building or portion thereof used on a 24-hour basis for the medical, psychiatric, obstetrical, or surgical care of four or more inpatients. [***101***, 2003] (ADM)

3.3.71 Hospital-Based. In the interpretation and application of this document, physically connected to a hospital. (GAS)

3.3.72 Humidifier. A device used for adding water vapor to inspired gas. (GAS)

3.3.73 Hyperbaric. Facility, building, or structure used to house chambers and all auxiliary service equipment for medical applications and procedures at pressures above normal atmospheric pressures. (HYP)

3.3.74 Hyperbaric Oxygenation. The application of pure oxygen or an oxygen-enriched gaseous mixture to a subject at elevated pressure. (HYP)

3.3.75 Hypobaric. Facility, building, or structure used to house chambers and all auxiliary service equipment for medical applications and procedures at pressures below atmospheric pressures. (HYP)

3.3.76 Hypoxia. A state of inadequate oxygenation of the blood and tissue sufficient to cause impairment of function. [**99B,** 2005] (HYP)

3.3.77 Immediate Restoration of Service. Automatic restoration of operation with an interruption of not more than 10 seconds. (ELS)

3.3.78* Impedance. Impedance is the ratio of the voltage drop across a circuit element to the current flowing through the same circuit element. The unit of impedance is the ohm. (ELE)

3.3.79 Incident Command System (ICS). The combination of facilities, equipment, personnel, procedures, and communications operating within a common organizational structure that has responsibility for the management of assigned resources to effectively accomplish stated objectives pertaining to an incident or training exercise. [**1670,** 2004] (HCE)

3.3.80 Instrument Air. For the purposes of this standard, instrument air is air intended for the powering of medical devices unrelated to human respiration (e.g., surgical tools, ceiling arms). Medical air and instrument air are distinct systems for mutually exclusive applications. Instrument air is a medical support gas that falls under the general requirements for medical gases. (PIP)

3.3.81 Intermittent Positive-Pressure Breathing (IPPB). Ventilation of the lungs by application of intermittent positive pressure to the airway. (GAS)

3.3.82* Intrinsically Safe. As applied to equipment and wiring, equipment and wiring that are incapable of releasing sufficient electrical energy under normal or abnormal conditions to cause ignition of a specific hazardous atmospheric mixture. (HYP)

3.3.83 Invasive Procedure. Any procedure that penetrates the protective surfaces of a patient's body (i.e., skin, mucous membrane, cornea) and that is performed with an aseptic field (procedural site). [Not included in this category are placement of peripheral intravenous needles or catheters used to administer fluids and/or medications, gastrointestinal endoscopies (i.e., sigmoidoscopies), insertion of urethral catheters, and other similar procedures.] (ELS)

3.3.84 Isolated Patient Lead. A patient lead whose impedance to ground or to a power line is sufficiently high that connecting the lead to ground, or to either conductor of the power line, results in current flow below a hazardous limit in the lead. (ELE)

3.3.85* Isolated Power System. A system comprising an isolating transformer or its equivalent, a line isolation monitor, and its ungrounded circuit conductors. (ELS)

3.3.86 Isolation Transformer. A transformer of the multiple-winding type, with the primary and secondary windings physically separated, that inductively couples its ungrounded secondary winding to the grounded feeder system that energizes its primary winding. (ELS)

3.3.87* Laboratory. A building, space, room, or group of rooms intended to serve activities involving procedures for

Copyright National Fire Protection Association
Provided by IHS under license with NFPA
No reproduction or networking permitted without license from IHS
Not for Resale

investigation, diagnosis, or treatment in which flammable, combustible, or oxidizing materials are to be used. (LAB)

3.3.88* Laboratory Work Area. A room or space for testing, analysis, research, instruction, or similar activities that involve the use of chemicals. This work area may or may not be enclosed. (LAB)

3.3.89 Leakage Current. Any current, including capacitively coupled current, not intended to be applied to a patient, that is conveyed from exposed conductive parts of an appliance to ground or to other accessible parts of an appliance. (ELE)

3.3.90 Level 1 Medical Piped Gas and Vacuum Systems. Systems serving occupancies where interruption of the piped medical gas and vacuum system would place patients in imminent danger of morbidity or mortality. (PIP)

3.3.91 Level 1 Vacuum System. A system consisting of central-vacuum-producing equipment with pressure and operating controls, shutoff valves, alarm warning systems, gauges, and a network of piping extending to and terminating with suitable station inlets at locations where patient suction could be required. (PIP)

3.3.92 Level 2 Medical Piped Gas and Vacuum Systems. Systems serving occupancies where interruption of the piped medical gas and vacuum system would place patients at manageable risk of morbidity or mortality. (PIP)

3.3.93* Level 3 Compressed Air System. A system of component parts, including, but not limited to, air compressor, motor, receiver, controls, filters, dryers, valves, and piping, that delivers compressed air <1100 kPa (<160 psi gauge) to power devices (hand pieces, syringe, cleaning devices, etc.) as a power source. (PIP)

3.3.94 Level 3 Piped Gas Systems. Systems serving occupancies where interruption of the piped medical gas would terminate procedures but would not place patients at risk of morbidity or mortality. (PIP)

3.3.95* Level 3 Piped Vacuum System. A Level 3 vacuum distribution system that can be either a wet system designed to remove liquids, air–gas, or solids from the treated area; or a dry system designed to trap liquid and solids before the service inlet and to accommodate air–gas only through the service inlet. (PIP)

3.3.96 Life Safety Branch. A subsystem of the emergency system consisting of feeders and branch circuits, meeting the requirements of Article 700 of NFPA 70, *National Electrical Code*, and intended to provide adequate power needs to ensure safety to patients and personnel, and that is automatically connected to alternate power sources during interruption of the normal power source. (ELS)

3.3.97 Limited Care Facility. A building or portion of a building used on a 24-hour basis for the housing of four or more persons who are incapable of self-preservation because of age; physical limitations due to accident or illness; or limitations such as mental retardation/developmental disability, mental illness, or chemical dependency. (ADM)

3.3.98* Limited-Combustible Material. A material (as defined in NFPA 220, *Standard on Types of Building Construction*) not complying with the definition of noncombustible material that, in the form in which it is used, has a potential heat value not exceeding 8141 kJ/kg (3500 Btu/lb) and complies with one of the following: (a) materials having a structural base of noncombustible material, with a surfacing not exceeding a thickness of 3.2 mm (⅛ in.) and having a flame-spread rating not greater than 50 or (b) materials, in the form and thickness used, other than as described in (a), having neither a flame-spread rating greater than 25 nor evidence of continued progressive combustion and of such composition that surfaces that would be exposed by cutting through the material on any plane would have neither a flame-spread rating greater than 25 nor evidence of continued progressive combustion. (PIP)

3.3.99 Line Isolation Monitor. A test instrument designed to continually check the balanced and unbalanced impedance from each line of an isolated circuit to ground and equipped with a built-in test circuit to exercise the alarm without adding to the leakage current hazard. (ELS)

3.3.100* Liquid. Any material that has a fluidity greater than that of 300 penetration asphalt when tested in accordance with ASTM D 5, *Standard Test Method for Penetration of Bituminous Materials*. [**30,** 2003] (LAB)

3.3.101* Local Signal. A visible indication of the operating status of equipment. (PIP)

3.3.102 mA. Milliampere.

3.3.103 Manifold. A device for connecting the outlets of one or more gas cylinders to the central piping system for that specific gas. (PIP)

3.3.104* Manufactured Assembly. A factory-assembled product designed for aesthetics or convenience that contains medical gas or vacuum outlets, piping, or other devices related to medical gases. (PIP)

3.3.105 Mask. A device that fits over the mouth and nose (oronasal) or nose (nasal), used to administer gases to a patient. (GAS)

3.3.106* Medical Air. For purposes of this standard, medical air is air supplied from cylinders, bulk containers, medical air compressors, or has been reconstituted from oxygen USP and oil-free, dry nitrogen NF.

3.3.107 Medical Air Compressor. A compressor that is designed to exclude oil from the air stream and compression chamber and that does not under normal operating conditions or any single fault add any toxic or flammable contaminants to the compressed air. (PIP)

3.3.108* Medical/Dental Office. A building or part thereof in which the following occur: (1) Examinations and minor treatments/procedures are performed under the continuous supervision of a medical/dental professional; (2) Only sedation or local anesthesia is involved and treatment or procedures do not render the patient incapable of self-preservation under emergency conditions; (3) Overnight stays for patients or 24-hour operation are not provided. (ADM)

3.3.109 Medical Gas. A patient medical gas or medical support gas. *(See also 3.3.143, Patient Medical Gas and 3.3.111, Medical Support Gas.)* (PIP)

3.3.110 Medical Gas System. An assembly of equipment and piping for the distribution of nonflammable medical gases such as oxygen, nitrous oxide, compressed air, carbon dioxide, and helium. (PIP)

3.3.111 Medical Support Gas. Piped gases such as nitrogen and instrument air that are used to support medical procedures by operating medical–surgical tools, equipment booms, pendants, and similar medical support applications.

Copyright National Fire Protection Association
Provided by IHS under license with NFPA
No reproduction or networking permitted without license from IHS
Not for Resale

3.3.112 Medical–Surgical Vacuum. A method used to provide a source of drainage, aspiration, and suction in order to remove body fluids from patients. (PIP)

3.3.113 Medical–Surgical Vacuum System. An assembly of central vacuum producing equipment and a network of piping for patient suction in medical, medical–surgical, and waste anesthetic gas disposal (WAGD) applications. (PIP)

3.3.114 Multiple Treatment Facility. A diagnostic or treatment complex under a single management comprising a number of single treatment facilities, which can be accessed one from the other without exiting the facility (i.e., does not involve widely separated locations or separate distinct practices). (ADM)

3.3.115 mV. Millivolt.

3.3.116 Nasal Cannula. Device consisting of two short tubes to be inserted into the nostrils to administer oxygen or other therapeutic gases. (GAS)

3.3.117 Nasal Catheter. A flexible tube for insertion through the nose into the nasopharynx to administer oxygen or other therapeutic gases. (GAS)

3.3.118 Nebulizer. A device used for producing an aerosol of water and/or medication within inspired gas supply. (GAS)

3.3.119 Negative Pressure. Pressure less than atmospheric. (GAS)

3.3.120 Nitrogen. An element that, at atmospheric temperatures and pressures, exists as a clear, colorless, and tasteless gas; it comprises approximately four-fifths of the earth's atmosphere. (GAS)

3.3.120.1 ***Nitrogen NF (Oil-Free, Dry).*** Nitrogen complying as a minimum with oil-free, dry nitrogen NF. (PIP)

3.3.121* Nitrogen Narcosis. A condition resembling alcoholic inebriation, which results from breathing nitrogen in the air under significant pressure. (HYP)

3.3.122 Nitrous Oxide. An inorganic compound, one of the oxides of nitrogen. It exists as a gas at atmospheric pressure and temperature, possesses a sweetish smell, and is used for inducing anesthesia when inhaled. The oxygen in the compound will be released under conditions of combustion, creating an oxygen-enriched atmosphere. (GAS)

3.3.123 Noncombustible (Hyperbaric). An adjective describing a substance that will not burn in 95 ± 5 percent oxygen at pressures up to 3 ATA (44.1 psia). (HYP)

3.3.124 Noncombustible (Hypobaric). An adjective describing a substance that will not burn in 95 percent, plus or minus 5 percent oxygen at pressures of 101.325 kPa (760 mm Hg). (HYP)

3.3.125* Noncombustible Material. A material (as defined in NFPA 220, *Standard on Types of Building Construction*) that, in the form in which it is used and under the conditions anticipated, will not ignite, burn, support combustion, or release flammable vapors when subjected to fire or heat. (PIP)

3.3.126 Nonflammable. An adjective describing a substance that will not burn under the conditions set forth in the definition of flame resistant. (HYP)

3.3.127* Nonflammable Anesthetic Agent. Refers to those inhalation agents that, because of their vapor pressure at 37°C (98.6°F) and at atmospheric pressure, cannot attain flammable concentrations when mixed with air, oxygen, or mixtures of oxygen and nitrous oxide. (GAS)

3.3.128* Nonflammable Medical Gas System. See 3.3.110, Medical Gas System.

3.3.129 Nursing Home. A building or portion of a building used on a 24-hour basis for the housing and nursing care of four or more persons who, because of mental or physical incapacity, might be unable to provide for their own needs and safety without the assistance of another person. (ADM)

3.3.130* Oxidizing Gas. A gas that supports combustion. (HYP)

3.3.131* Oxygen. An element that, at atmospheric temperatures and pressures, exists as a colorless, odorless, tasteless gas. (GAS)

3.3.131.1 ***Gaseous Oxygen.*** A colorless, odorless, and tasteless gas; also, the physical state of the element at atmospheric temperature and pressure. (GAS)

3.3.131.2* ***Liquid Oxygen.*** Exists at cryogenic temperature, approximately –184.4°C (–300°F) at atmospheric pressure. It retains all of the properties of gaseous oxygen, but, in addition, when allowed to warm to room temperature at atmospheric pressure, it will evaporate and expand to fill a volume 860 times its liquid volume. (GAS)

3.3.132* Oxygen Delivery Equipment. Any device used to transport and deliver an oxygen-enriched atmosphere to a patient. (GAS)

3.3.133 Oxygen-Enriched Atmosphere. For the purpose of this standard, and only for the purpose of this standard, an atmosphere in which the concentration of oxygen exceeds 23.5 percent by volume. (HYP)

3.3.134 Oxygen Hood. A device encapsulating a patient's head and used for a purpose similar to that of a mask. *(See also 3.3.105, Mask.)* (HYP)

3.3.135 Oxygen Index. The minimum concentration of oxygen, expressed as percent by volume, in a mixture of oxygen and nitrogen that will just support combustion of a material under conditions of ASTM D 2863, *Standard Test Method for Measuring the Minimum Oxygen Concentration to Support Candle-Like Combustion of Plastics (Oxygen Index).* (HYP)

3.3.136* Oxygen Toxicity (Hyperbaric). Physical impairment resulting from breathing gaseous mixtures containing oxygen-enriched atmospheres at elevated partial pressures for extended periods of time. (HYP)

3.3.137 Patient Bed Location. The location of a patient sleeping bed, or the bed or procedure table of a critical care area. (ELS)

3.3.138* Patient Care Area. Any portion of a health care facility wherein patients are intended to be examined or treated. (ELE)

3.3.138.1* ***Critical Care Areas.*** Those special care units, intensive care units, coronary care units, angiography laboratories, cardiac catheterization laboratories, delivery rooms, operating rooms, postanesthesia recovery rooms, emergency departments, and similar areas in which patients are intended to be subjected to invasive procedures and connected to line-operated, patient-care–related electrical appliances.

3.3.138.2* ***General Care Areas.*** Patient bedrooms, examining rooms, treatment rooms, clinics, and similar areas in which it is intended that the patient will come in contact with ordinary appliances such as a nurse-call system, electric beds, examining lamps, telephones, and entertainment devices. (ELE)

Copyright National Fire Protection Association
Provided by IHS under license with NFPA
No reproduction or networking permitted without license from IHS
Not for Resale

3.3.139 Patient-Care-Related Electrical Appliance. An electrical appliance that is intended to be used for diagnostic, therapeutic, or monitoring purposes in a patient care vicinity. (ELE)

3.3.140 Patient Care Vicinity. A space, within a location intended for the examination and treatment of patients, extending 1.8 m (6 ft) beyond the normal location of the bed, chair, table, treadmill, or other device that supports the patient during examination and treatment and extending vertically to 7 ft 6 in. (2.3 m) above the floor. (ELE)

3.3.141 Patient Equipment Grounding Point. A jack or terminal that serves as the collection point for redundant grounding of electric appliances serving a patient care vicinity or for grounding other items in order to eliminate electromagnetic interference problems. (ELE)

3.3.142* Patient Lead. Any deliberate electrical connection that can carry current between an appliance and a patient. (ELE)

3.3.143 Patient Medical Gas. Piped gases such as oxygen, nitrous oxide, helium, carbon dioxide, and medical air that are used in the application of human respiration and the calibration of medical devices used for human respiration. (PIP)

3.3.144 Piped Distribution System. A pipeline network assembly of equipment that starts at and includes the source valve, warning systems (master, area, local alarms), bulk gas system signal actuating switch wiring, interconnecting piping, and all other components up to and including the station outlets/inlets. (PIP)

3.3.145 Piping. The tubing or conduit of the system. The three general classes of piping are main lines, risers. and branch (lateral) lines. (PIP)

3.3.145.1 ***Branch (Lateral) Lines.*** Those sections or portions of the piping system that serve a room or group of rooms on the same story of the facility. (PIP)

3.3.145.2 ***Main Lines.*** The piping that connects the source (pumps, receivers, etc.) to the risers or branches, or both. (PIP)

3.3.145.3 ***Risers.*** The vertical pipes connecting the system main line(s) with the branch lines on the various levels of the facility. (PIP)

3.3.146 Plug (Attachment Plug, Cap). A device that, by insertion in a receptacle, establishes connection between the conductors of the attached flexible cord and the conductors connected permanently to the receptacle. (ELE)

3.3.147 Positive-Negative Pressure Breathing. Ventilation of the lungs by the application of intermittent positive-negative pressure to the airway. (GAS)

3.3.148 Pressure.

3.3.148.1 ***Absolute Pressure.*** The total pressure in a system with reference to zero pressure. (HYP)

3.3.148.2 ***Ambient Pressure.*** Refers to total pressure of the environment referenced. (HYP)

3.3.148.3 ***Gauge Pressure.*** Refers to total pressure above (or below) atmospheric. (HYP)

3.3.148.4 ***High Pressure.*** A pressure exceeding 200 psig (1.38 kPa gauge) (215 psia). (GAS)

3.3.148.5* ***Partial Pressure.*** The pressure, in absolute units, exerted by a particular gas in a gas mixture. (HYP)

3.3.148.6 ***Positive Pressure.*** Pressure greater than ambient atmospheric. (GAS)

3.3.148.7* ***Working Pressure.*** A pressure not exceeding 11.6 kg/cm^2 (200 psig). (GAS)

3.3.149* Pressure-Reducing Regulator. A device that automatically reduces gas under high pressure to a usable lower working pressure. (GAS)

3.3.150 Procedure Room. Where the proceduralist is using instrumentation that requires constant observation and control.

3.3.151 psia. Pounds per square inch absolute, a unit of pressure measurement with zero pressure as the base or reference pressure. (HYP)

3.3.152* psig. Pounds per square inch gauge, a unit of pressure measurement with atmospheric pressure as the base or reference pressure. (HYP)

3.3.153 Quiet Ground. A system of grounding conductors, insulated from portions of the conventional grounding of the power system, that interconnects the grounds of electric appliances for the purpose of improving immunity to electromagnetic noise. (ELS)

3.3.154 Reactance. The component of impedance contributed by inductance or capacitance. The unit of reactance is the ohm. (ELE)

3.3.155* Reactive Material. A material that, by itself, is readily capable of detonation, explosive decomposition, or explosive reaction at normal or elevated temperatures and pressures. [**45**, 2004] (LAB)

3.3.156 Reference Grounding Point. The ground bus of the panelboard or isolated power system panel supplying the patient care area. (ELE)

3.3.157* Refrigerating Equipment. Any mechanically operated equipment used for storing, below normal ambient temperature, hazardous materials having flammability ratings of 3 or 4. (LAB)

3.3.158 Relative Analgesia. A state of sedation and partial block of pain perception produced in a patient by the inhalation of concentrations of nitrous oxide insufficient to produce loss of consciousness (conscious sedation). (GAS)

3.3.159* Remote. A Level 3 source of supply that is accessed by exiting the single or multiple treatment facility. (PIP)

3.3.160 Reserve Supply. Where existing, that portion of the supply equipment that automatically supplies the system in the event of failure of the operating supply. The reserve supply only functions in an emergency and not as a normal operating procedure. (PIP)

3.3.161 Safety Can. An approved container, of not more than 18.9 L (5 gal) capacity, having a spring-closing lid and spout cover and so designed that it will safely relieve internal pressure when subjected to fire exposure. (LAB)

3.3.162 Scavenging. An alternate term for WAGD often applied in Level 3. (PIP)

3.3.163 SCFM. Standard cubic feet per minute. (PIP)

3.3.164 Selected Receptacles. A minimal number of receptacles selected by the governing body of a facility as necessary to provide essential patient care and facility services during loss of normal power. (ELS)

Copyright National Fire Protection Association
Provided by IHS under license with NFPA
No reproduction or networking permitted without license from IHS
Not for Resale

3.3.165 Self-Extinguishing. A characteristic of a material such that, once the source of ignition is removed, the flame is quickly extinguished without the fuel or oxidizer being exhausted. (HYP)

3.3.166 Semipermanent Connection. A noninterchangeable connection, usually a D.I.S.S. connector, which is the termination of the pipeline and that is intended to be detached only for service. It is not the point at which the user makes connections or disconnections. (PIP)

3.3.167 Service Inlet. The pneumatic terminus of a Level 3 piped vacuum system. (PIP)

3.3.168 Service Outlet. The pneumatic terminus of a piped gas system for other than critical, continuous duty, nonflammable medical life support type gases such as oxygen, nitrous oxide, or medical air. (PIP)

3.3.169* Single Treatment Facility. A diagnostic or treatment complex under a single management comprising a number of use points, but confined to a single contiguous group of use points (i.e., does not involve widely separated locations or separate distinct practices). (PIP)

3.3.170* Site of Intentional Expulsion. All points within 0.3 m (1 ft) of a point at which an oxygen-enriched atmosphere is intentionally vented to the atmosphere. (GAS)

3.3.171 Station Inlet. An inlet point in a piped medical/surgical vacuum distribution system at which the user makes connections and disconnections. (PIP)

3.3.172 Station Outlet. An outlet point in a piped medical gas distribution system at which the user makes connections and disconnections. (PIP)

3.3.173 Supply Source.

3.3.173.1 ***Operating Supply.*** The portion of the supply system that normally supplies the piping systems. The operating supply consists of a primary supply or a primary and secondary supply. (PIP)

3.3.173.2 ***Primary Supply.*** That portion of the source equipment that actually supplies the system. (PIP)

3.3.173.3 ***Reserve Supply.*** Where provided, that portion of the source equipment that automatically supplies the system in the event of failure of the primary and secondary operating supply. (PIP)

3.3.173.4 ***Secondary Supply.*** Where provided, that portion of the source equipment that automatically supplies the system when the primary supply becomes exhausted. (PIP)

3.3.174 Support Gas. Nitrogen or instrument air that is used to support medical procedures by operating medical–surgical tools, equipment booms, pendants, and similar devices, and are not respired as part of any treatment. (PIP)

3.3.175* Surface-Mounted Medical Gas Rail Systems. A surface-mounted gas delivery system intended to provide ready access for two or more gases through a common delivery system to provide multiple gas station outlet locations within a single patient room or critical care area. (PIP)

3.3.176 Task Illumination. Provisions for the minimum lighting required to carry out necessary tasks in the areas described in Chapter 4, including safe access to supplies and equipment and access to exits. (ELS)

3.3.177 Terminal. The end of a flexible hose or tubing used in a manufactured assembly where the user is intended to make connection and disconnection. (PIP)

3.3.178 Tube.

3.3.178.1* ***Endotracheal Tube.*** A tube for insertion through the mouth or nose into the upper portion of the trachea (windpipe). (GAS)

3.3.178.2* ***Tracheotomy Tube.*** A curved tube for insertion into the trachea (windpipe) below the larynx (voice box) during the performance of an appropriate operative procedure (tracheotomy). (GAS)

3.3.179* Unattended Laboratory Operation. A laboratory procedure or operation at which there is no person present who is knowledgeable regarding the operation and emergency shutdown procedures. [**45**, 2004] (LAB)

3.3.180 Use Point. A location with any number of station outlets and inlets arranged for access by a practitioner during treatment of a patient. (PIP)

3.3.181* Utility Center (J box). A type of terminal enclosure for utilities (e.g., gas power, vacuum, water, electrical power) used in office-based occupancies. (PIP)

3.3.182 Vaporizer. A heat exchange unit designed to convert cryogenic liquid into the gaseous state. (PIP)

3.3.183* WAGD Interface. A device provided on the anesthesia gas machine that connects the WAGD network to the patient breathing circuit. (PIP)

3.3.184 Waste Anesthetic Gas Disposal (WAGD). The process of capturing and carrying away gases vented from the patient breathing circuit during the normal operation of gas anesthesia or analgesia equipment. (PIP)

3.3.185* Wet Locations. The area in a patient care area where a procedure is performed that is normally subject to wet conditions while patients are present including standing fluids on the floor or drenching of the work area, either of which condition is intimate to the patient or staff. (ADM)

Chapter 4 Electrical Systems

4.1* Applicability. This chapter applies to health care facilities as referenced in other chapters.

4.2 Nature of Hazards. See Section B.1.

4.2.1* Fire and Explosions.

4.2.2 Shock.

4.2.2.1 General.

4.2.2.2 Control. See B.1.2.2.2.

4.2.3 Thermal. (Reserved)

4.2.4 Interruption of Power. See B.1.4.1.

4.3 Electrical System Requirements.

4.3.1 Sources. Each appliance of a hospital requiring electrical line power for operation shall be supported by power sources and distribution systems that provide power adequate for each service.

4.3.1.1 Power/Utility Company. (Reserved)

Copyright National Fire Protection Association
Provided by IHS under license with NFPA
No reproduction or networking permitted without license from IHS
Not for Resale

4.3.1.2 On-Site Generator Set. (Reserved)

4.3.2 Distribution.

4.3.2.1 Electrical Installation. Installation shall be in accordance with NFPA 70, *National Electrical Code*.

4.3.2.2* All Patient Care Areas.

4.3.2.2.1* Regular voltage wiring shall comply with the requirements in 4.3.2.2.1.1 through 4.3.2.2.1.3.

4.3.2.2.1.1* Circuits. Branch circuits serving a given patient bed location shall be fed from not more than one normal branch circuit distribution panel. When required, branch circuits serving a given patient bed location shall be permitted to be fed from more than one emergency branch circuit distribution panel.

4.3.2.2.1.2 Critical Care Areas. These areas shall be served by circuits from critical branch panel(s) served from a single automatic transfer switch and a minimum of one circuit served by the normal power distribution system or by a system originating from a second critical branch transfer switch.

4.3.2.2.1.3 Special Purpose Outlets. Branch circuits serving only special-purpose outlets or receptacles (e.g., portable X-ray receptacles) shall not be required to conform to the requirements of 4.3.2.2.1.2.

4.3.2.2.2 Grounding requirements shall comply with the requirements in 4.3.2.2.2.1 through 4.3.2.2.2.4.

4.3.2.2.2.1 Grounding Circuitry Integrity. Grounding circuits and conductors in patient care areas shall be installed in such a way that the continuity of other parts of those circuits cannot be interrupted nor the resistance raised above an acceptable level by the installation, removal, and replacement of any installed equipment, including power receptacles.

4.3.2.2.2.2* Reliability of Grounding. Where used, the reliability of installed grounding circuits to a power receptacle in all patient care areas shall be at least equivalent to that provided by an electrically continuous copper conductor of appropriate ampacity run from the receptacle to a grounding bus in the distribution panel. The grounding conductor shall conform to NFPA 70, *National Electrical Code*.

4.3.2.2.2.3 Separate Grounding Conductor. When existing construction does not use a separate grounding conductor, the continued use of the system shall be permitted to be used, provided it meets the performance requirements in 4.3.3.1, Grounding System in Patient Care Areas.

4.3.2.2.2.4 Metal Receptacle Boxes. Where metal receptacle boxes are used, the performance of the connection between the receptacle grounding terminal and the metal box shall be equivalent to the performance provided by copper wire no smaller than 12 AWG.

4.3.2.2.3* Grounding Interconnects. In patient care areas supplied by the normal distribution system and any branch of the essential electrical system, the grounding system of the normal distribution system and that of the essential electrical system shall be interconnected.

4.3.2.2.4 Circuit Protection.

4.3.2.2.4.1* The main and downstream ground-fault protective devices (where required) shall be coordinated as required in 4.3.2.5.

4.3.2.2.4.2* If used, ground-fault circuit interrupters (GFCIs) shall be listed and approved for the purpose.

4.3.2.2.5 Low-voltage wiring shall comply with either of the following:

(1) Fixed systems of 30 V (dc or ac rms) or less shall be ungrounded, provided the insulation between each ungrounded conductor and the primary circuit, which is supplied from a conventionally grounded distribution system, is the same protection as required for the primary voltage.
(2) A grounded low-voltage system shall be permitted provided that load currents are not carried in the grounding conductors.

4.3.2.2.5.1 Wiring for low-voltage control systems and nonemergency communications and signaling systems shall not be required to be installed in metal raceways in anesthetizing locations.

4.3.2.2.6* Receptacles.

4.3.2.2.6.1* Types of Receptacles. Each power receptacle shall provide at least one separate, highly dependable grounding pole capable of maintaining low-contact resistance with its mating plug despite electrical and mechanical abuse. Special receptacles such as the following shall be permitted:

(1) Four-pole units providing an extra pole for redundant grounding or ground continuity monitoring
(2) Locking-type receptacles
(3) Where required for reduction of electrical noise on the grounding circuit, receptacles in which the grounding terminals are purposely insulated from the receptacle yoke

4.3.2.2.6.2 Minimum Number of Receptacles. The number of receptacles shall be determined by the intended use of the patient care areas in accordance with 4.3.2.2.6.2(A) through 4.3.2.2.6.2(D).

(A) Receptacles for Patient Bed Locations in General Care Areas. Each patient bed location shall be provided with a minimum of four receptacles (or two duplex receptacles).

(B) Receptacles for Patient Bed Locations in Critical Care Areas. Each patient bed location shall be provided with a minimum of six receptacles (or three duplex receptacles).

(C) Receptacles for Bathrooms or Toilets. Receptacles shall not be required in bathrooms or toilet rooms.

(D) Receptacles for Special Areas. Receptacles shall not be required in areas where medical requirements mandate otherwise (e.g., certain psychiatric, pediatric, or hydrotherapy areas).

4.3.2.2.6.3 Polarity of Receptacles. Each receptacle shall be wired in accordance with NFPA 70, *National Electrical Code*, to ensure correct polarity.

4.3.2.2.6.4 Receptacles and Amperage. Receptacles for use with 250 V, 50 A, and 60 A ac service shall be designed for use in anesthetizing locations and shall be so designed that the 60 A receptacle will accept either the 50 A or the 60 A plug. Fifty-ampere receptacles shall be designed so as not to accept the 60 A attachment plug. These receptacles shall be of the two-pole, three-wire design with the third contact connecting to the grounding wire (green or green with yellow stripe) of the electrical system.

Copyright National Fire Protection Association
Provided by IHS under license with NFPA
No reproduction or networking permitted without license from IHS
Not for Resale

4.3.2.2.6.5 Other Services Receptacles. Receptacles provided for other services having different voltages, frequencies, or types on the same premises shall be of such design that attachment plugs and caps used in such receptacles cannot be connected to circuits of a different voltage, frequency, or type, but shall be interchangeable within each classification and rating required for two-wire, 125 V, single-phase ac service.

4.3.2.2.7 Special Grounding.

4.3.2.2.7.1* Use of Quiet Grounds. A quiet ground, if used, shall not defeat the purposes of the safety features of the grounding systems detailed herein.

4.3.2.2.7.2 Patient Equipment Grounding Point. A patient equipment grounding point comprising one or more grounding terminals or jacks shall be permitted in an accessible location in the patient care vicinity.

4.3.2.2.7.3* Special Grounding in Patient Care Areas. In addition to the grounding required to meet the performance requirements of 4.3.3.1, additional grounding shall be permitted where special circumstances so dictate.

4.3.2.2.8 Wet Locations.

4.3.2.2.8.1* Wet location patient care areas shall be provided with special protection against electric shock. This special protection shall be provided as follows:

(1) A power distribution system that inherently limits the possible ground-fault current due to a first fault to a low value, without interrupting the power supply
(2) A power distribution system in which the power supply is interrupted if the ground-fault current does, in fact, exceed a value of 6 mA

4.3.2.2.8.2 Patient beds, toilets, bidets, and wash basins shall not be required to be considered wet locations.

4.3.2.2.8.3 In existing construction, the requirements of 4.3.2.2.8.1 are not required when written inspection procedure, acceptable to the authority having jurisdiction, is continuously enforced by a designated individual at the hospital, to indicate that equipment-grounding conductors for 120 V, single-phase, 15 A and 20 A receptacles, equipment connected by cord and plug, and fixed electrical equipment are installed and maintained in accordance with NFPA 70, *National Electrical Code*, and applicable performance requirements of this chapter.

(A) The procedure shall include electrical continuity tests of all required equipment, grounding conductors, and their connections.

(B) Fixed receptacles, equipment connected by cord and plug, and fixed electrical equipment shall be tested as follows:

(1) When first installed
(2) Where there is evidence of damage
(3) After any repairs
(4) At intervals not exceeding 6 months

4.3.2.2.8.4 The use of an isolated power system (IPS) shall be permitted as a protective means capable of limiting ground fault current without power interruption. When installed, such a power system shall conform to the requirements of 4.3.2.6.

4.3.2.2.8.5 Where power interruption under first fault condition (line-to-ground fault) is tolerable, the use of a ground-fault circuit interrupter (GFCI) shall be permitted as the protective means that monitors the actual ground-fault current and interrupts the power when that current exceeds 6 mA.

4.3.2.2.9 Isolated Power. An isolated power system shall not be required to be installed in any patient care area except as specified in 4.3.2.2.8. The system shall be permitted to be installed where it conforms to the performance requirements specified in 4.3.2.6.

4.3.2.3 Laboratories. Outlets with two to four receptacles, or an equivalent power strip, shall be installed every 0.5 m to 1.0 m (1.6 ft to 3.3 ft) in instrument usage areas, and either installation is to be at least 8 cm (3.15 in.) above the countertop.

4.3.2.4 Other Nonpatient Areas. (Reserved)

4.3.2.5 Ground-Fault Protection.

4.3.2.5.1 Applicability. The requirements of 4.3.2.5.2 shall apply to hospitals and other buildings housing critical care areas or utilizing life support equipment, and buildings that provide essential utilities or services for the operation of critical care areas or electrical life support equipment.

4.3.2.5.2 When ground-fault protection is provided for operation of the service or feeder disconnecting means, an additional step of ground-fault protection shall be provided in the next level of feeder downstream toward the load. Ground-fault protection for operation of the service and feeder disconnecting means shall be fully selective such that the downstream device and not the upstream device shall open for downstream ground faults.

4.3.2.6* Isolated Power Systems.

4.3.2.6.1 Isolation Transformer.

4.3.2.6.1.1 The isolation transformer shall be listed and approved for the purpose.

4.3.2.6.1.2 The primary winding shall be connected to a power source so that it is not energized with more than 600 V (nominal). The neutral of the primary winding shall be grounded in an approved manner. If an electrostatic shield is present, it shall be connected to the reference grounding point.

4.3.2.6.1.3 Wiring of isolated power systems shall be in accordance with Section 517.62 of NFPA 70, *National Electrical Code*.

4.3.2.6.2 Impedance of Isolated Wiring.

4.3.2.6.2.1* The impedance (capacitive and resistive) to ground of either conductor of an isolated system shall exceed 200,000 ohms when installed. The installation at this point shall include receptacles but is not required to include lighting fixtures or components of fixtures. This value shall be determined by energizing the system and connecting a low-impedance ac milliammeter (0 mA to 1 mA scale) between the reference grounding point and either conductor in sequence. This test shall be permitted to be performed with the line isolation monitor *(see 4.3.2.6.3)* connected, provided the connection between the line isolation monitor and the reference grounding point is open at the time of the test. After the test is made, the milliammeter shall be removed and the grounding connection of the line isolation monitor shall be restored. When the installation is completed, including permanently connected fixtures, the reading of the meter on the line isolation monitor, which corresponds to the unloaded line condition, shall be made. This meter reading shall be recorded as a reference for subsequent line-impedance evaluation. This test shall be conducted with no phase conductors grounded.

4.3.2.6.2.2 An approved capacitance suppressor shall be permitted to be used to improve the impedance of the perma-

Copyright National Fire Protection Association
Provided by IHS under license with NFPA
No reproduction or networking permitted without license from IHS
Not for Resale

nently installed isolated system; however, the resistive impedance to ground of each isolated conductor of the system shall be at least 1 megohm prior to the connection of the suppression equipment. Capacitance suppressors shall be installed so as to prevent inadvertent disconnection during normal use.

4.3.2.6.3 Line Isolation Monitor.

4.3.2.6.3.1* In addition to the usual control and protective devices, each isolated power system shall be provided with an approved continually operating line isolation monitor that indicates possible leakage or fault currents from either isolated conductor to ground.

4.3.2.6.3.2 The monitor shall be designed such that a green signal lamp, conspicuously visible in the area where the line isolation monitor is utilized, remains lighted when the system is adequately isolated from ground; and an adjacent red signal lamp and an audible warning signal (remote if desired) shall be energized when the total hazard current (consisting of possible resistive and capacitive leakage currents) from either isolated conductor to ground reaches a threshold value of 5.0 mA under normal line voltage conditions. The line isolation monitor shall not alarm for a fault hazard current of less than 3.7 mA.

4.3.2.6.3.3* The line isolation monitor shall comply with either of the following:

(1) It shall have sufficient internal impedance such that, when properly connected to the isolated system, the maximum internal current that will flow through the line isolation monitor, when any point of the isolated system is grounded, shall be 1 mA.
(2) It shall be permitted to be of the low-impedance type such that the current through the line isolation monitor, when any point of the isolated system is grounded, will not exceed twice the alarm threshold value for a period not exceeding 5 msec.

4.3.2.6.3.4* An ammeter connected to indicate the total hazard current of the system (contribution of the fault hazard current plus monitor hazard current) shall be mounted in a plainly visible place on the line isolation monitor with the "alarm on" zone (total hazard current = 5.0 mA) at approximately the center of the scale. It is desirable to locate the ammeter such that it is conspicuously visible to persons in the anesthetizing location.

4.3.2.6.3.5 Means shall be provided for shutting off the audible alarm while leaving the red warning lamp activated. When the fault is corrected and the green signal lamp is reactivated, the audible alarm silencing circuit shall reset automatically, or an audible or distinctive visual signal shall indicate that the audible alarm is silenced.

4.3.2.6.3.6 A reliable test switch shall be mounted on the line isolation monitor to test its capability to operate (i.e., cause the alarms to operate and the meter to indicate in the "alarm on" zone). This switch shall transfer the grounding connection of the line isolation monitor from the reference grounding point to a test impedance arrangement connected across the isolated line; the test impedance(s) shall be of the appropriate magnitude to produce a meter reading corresponding to the rated total hazard current at the nominal line voltage, or to a lesser alarm hazard current if the line isolation monitor is so rated. The operation of this switch shall break the grounding connection of the line isolation monitor to the reference grounding point before transferring this grounding connector to the test impedance(s), so that making this test will not add to the hazard of a system in actual use, nor will the test include the effect of the line to ground stray impedance of the system. The test switch shall be of a self-restoring type.

4.3.2.6.3.7 The line isolation monitor shall not generate energy of sufficient amplitude or frequency, as measured by a physiological monitor with a gain of at least 10^4 with a source impedance of 1000 ohms connected to the balanced differential input of the monitor, to create interference or artifact on human physiological signals. The output voltage from the amplifier shall not exceed 30 mV when the gain is 10^4. The 1000 ohms impedance shall be connected to the ends of typical unshielded electrode leads that are a normal part of the cable assembly furnished with physiological monitors. A 60 Hz notch filter shall be used to reduce ambient interference as is typical in physiological monitor design.

4.3.2.6.4 Identification of Conductors for Isolated (Ungrounded) Systems. The isolated conductors shall be identified in accordance with Section 517.160(a)(5) of NFPA 70, *National Electrical Code*.

4.3.3 Performance Criteria and Testing.

4.3.3.1 Grounding System in Patient Care Areas.

4.3.3.1.1* Grounding System Testing. The effectiveness of the grounding system shall be determined by voltage measurements and impedance measurements.

4.3.3.1.1.1 For new construction, the effectiveness of the grounding system shall be evaluated before acceptance.

4.3.3.1.1.2 Small, wall-mounted conductive surfaces, not likely to become energized, such as surface-mounted towel and soap dispensers, mirrors, and so forth, shall not be required to be intentionally grounded or tested.

4.3.3.1.1.3 Large, metal conductive surfaces not likely to become energized, such as windows, door frames, and drains, shall not be required to be intentionally grounded or periodically tested.

4.3.3.1.1.4* Whenever the electrical system has been altered or replaced, that portion of the system shall be tested.

4.3.3.1.2 Reference Point. The voltage and impedance measurements shall be taken with respect to a reference point. The reference point shall be one of the following:

(1) A reference grounding point *(see Chapter 3, Definitions)*
(2) A grounding point, in or near the room under test, that is electrically remote from receptacles, for example, an all-metal cold-water pipe
(3) The grounding contact of a receptacle that is powered from a different branch circuit from the receptacle under test

4.3.3.1.3* Voltage Measurements. The voltage measurements shall be made under no-fault conditions between a reference point and exposed fixed electrical equipment with conductive surfaces in a patient care vicinity. The voltage measurements shall be made with an accuracy of ±20 percent. Voltage measurements for faceplates of wiring devices shall not be required.

4.3.3.1.4* Impedance Measurements. The impedance measurement shall be made with an accuracy of ±20 percent. For new construction, the impedance measurement shall be made between the reference point and the grounding contact of 10 percent of all receptacles in each patient care vicinity. The impedance measurement shall be the ratio of voltage developed (either

Copyright National Fire Protection Association
Provided by IHS under license with NFPA
No reproduction or networking permitted without license from IHS
Not for Resale

60 Hz or dc) between the point under test and the reference point to the current applied between these two points.

4.3.3.1.5 Test Equipment. Electrical safety test instruments shall be tested periodically, but not less than annually, for acceptable performance.

4.3.3.1.5.1 Voltage measurements specified in 4.3.3.1.3 shall be made with an instrument having an input resistance of 1000 ohms ±10 percent at frequencies of 1000 Hz or less.

4.3.3.1.5.2 The voltage across the terminals (or between any terminal and ground) of resistance-measuring instruments used in occupied patient care areas shall not exceed 500 mV rms or 1.4 dc or peak to peak.

4.3.3.1.6 Criteria for Acceptability for New Construction.

4.3.3.1.6.1 Voltage limit shall be 20 mV.

4.3.3.1.6.2 Impedance limit shall be 0.2 ohms for quiet ground systems, and 0.1 ohms for all others.

4.3.3.2 Receptacle Testing in Patient Care Areas.

4.3.3.2.1 The physical integrity of each receptacle shall be confirmed by visual inspection.

4.3.3.2.2 The continuity of the grounding circuit in each electrical receptacle shall be verified.

4.3.3.2.3 Correct polarity of the hot and neutral connections in each electrical receptacle shall be confirmed.

4.3.3.2.4 The retention force of the grounding blade of each electrical receptacle (except locking-type receptacles) shall be not less than 115 g (4 oz).

4.3.3.3 Isolated Power Systems.

4.3.3.3.1 Patient Care Areas. If installed, the isolated power system shall be tested in accordance with 4.3.3.3.2.

4.3.3.3.2 Line Isolation Monitor Tests.

4.3.3.3.2.1 The Line Isolation Monitor (LIM) circuit shall be tested after installation, and prior to being placed in service, by successively grounding each line of the energized distribution system through a resistor of 200 × V ohms, where V equals measured line voltage. The visual and audible alarms *(see 4.3.2.6.3.2)* shall be activated.

4.3.3.4 Ground-Fault Protection Testing. When equipment ground-fault protection is first installed, each level shall be performance-tested to ensure compliance with 4.3.2.5.

4.3.4* Administration of Electrical System.

4.3.4.1 Maintenance and Testing of Electrical System.

4.3.4.1.1 Testing for hospital grade receptacles required at patient bed locations and in anesthetizing locations shall be performed after initial installation, replacement, or servicing of the device.

4.3.4.1.2 Additional testing of receptacles in patient care areas shall be performed at intervals defined by documented performance data.

4.3.4.1.3 Receptacles at patient bed locations and in anesthetizing locations not listed as hospital-grade shall be tested at intervals not exceeding 12 months.

4.3.4.1.4 The LIM circuit shall be tested at intervals of not more than 1 month by actuating the LIM test switch *(see 4.3.2.6.3.6)*. For a LIM circuit with automated self-test and self-calibration capabilities, this test shall be performed at intervals of not more than 12 months. Actuation of the test switch shall activate both visual and audible alarm indicators.

4.3.4.1.5 After any repair or renovation to an electrical distribution system, the LIM circuit shall be tested in accordance with 4.3.3.3.2.1.

4.3.4.2 Recordkeeping.

4.3.4.2.1* General. A record shall be maintained of the tests required by this chapter and associated repairs or modification. At a minimum, this record shall contain the date, the rooms or areas tested, and an indication of which items have met or have failed to meet the performance requirements of this chapter.

4.3.4.2.2 Isolated Power System (Where Installed). A permanent record shall be kept of the results of each of the tests.

4.4 Essential Electrical System Requirements — Type 1.

4.4.1 Sources (Type 1 EES).

4.4.1.1 On-Site Generator Set.

4.4.1.1.1* Design Considerations. Dual sources of normal power shall be considered but shall not constitute an alternate source of power as described in this chapter.

4.4.1.1.1.1 Distribution system arrangements shall be designed to minimize interruptions to the electrical systems due to internal failures by the use of adequately rated equipment.

4.4.1.1.1.2 The following factors shall be considered in the design of the distribution system:

(1) Abnormal voltages such as single phasing of three-phase utilization equipment, switching and/or lightning surges, voltage reductions, and so forth
(2) Capability of achieving the fastest possible restoration of any given circuit(s) after clearing a fault
(3) Effects of future changes, such as increased loading and/or supply capacity
(4) Stability and power capability of the prime mover during and after abnormal conditions
(5)*Sequence reconnection of loads to avoid large current inrushes that trip overcurrent devices or overload the generator(s)
(6) Bypass arrangements to permit testing and maintenance of system components that could not otherwise be maintained without disruption of important hospital functions
(7) Effects of any harmonic currents on neutral conductors and equipment

4.4.1.1.2 Current-sensing devices, phase and ground, shall be selected to minimize the extent of interruption to the electrical system due to abnormal current caused by overload and/or short circuits.

4.4.1.1.3 Generator load-shed circuits designed for the purpose of load reduction or for load priority systems shall not shed life safety branch loads, critical branch loads serving critical care areas, medical air compressors, medical–surgical vacuum pumps, pressure maintenance (jockey) pump(s) for water-based fire protection systems, generator fuel pumps, or other generator accessories.

4.4.1.1.4 Essential electrical systems shall have a minimum of two independent sources of power: a normal source generally supplying the entire electrical system and one or more alternate sources for use when the normal source is interrupted.

Copyright National Fire Protection Association
Provided by IHS under license with NFPA
No reproduction or networking permitted without license from IHS
Not for Resale

4.4.1.1.5 Where the normal source consists of generating units on the premises, the alternate source shall be either another generating set or an external utility service.

4.4.1.1.6 General. Generator sets installed as an alternate source of power for essential electrical systems shall be designed to meet the requirements of such service.

4.4.1.1.6.1 Type 1 and Type 2 essential electrical system power sources shall be classified as Type 10, Class X, Level 1 generator sets per NFPA 110, *Standard for Emergency and Standby Power Systems*.

4.4.1.1.6.2 Type 3 essential electrical system power sources shall be classified as Type 10, Class X, Level 2 generator sets per NFPA 110, *Standard for Emergency and Standby Power Systems*.

4.4.1.1.7 Uses for Essential Electrical System.

4.4.1.1.7.1 The generating equipment used shall be either reserved exclusively for such service or normally used for other purposes of peak demand control, internal voltage control, load relief for the external utility, or cogeneration. If normally used for the other purposes listed above, two or more sets shall be installed, such that the maximum actual demand likely to be produced by the connected load of the emergency system as well as medical air compressors, medical–surgical vacuum pumps, electrically operated fire pumps, jockey pumps, fuel pumps, and generator accessories shall be met with the largest single generator set out-of-service. The alternate source of emergency power for illumination and identification of means of egress shall be the essential electrical system. The alternate power source for fire protection signaling systems shall be the essential electrical systems.

4.4.1.1.7.2 A single generator set that operates the essential electrical system shall be permitted to be part of the system supplying the other purposes as listed in 4.4.1.1.7.1, provided any such use will not decrease the mean period between service overhauls to less than three years.

4.4.1.1.7.3* Optional loads shall be permitted to be served by the essential electrical system generating equipment. Optional loads shall be served by their own transfer means, such that these loads shall not be transferred onto the generating equipment if the transfer will overload the generating equipment and shall be shed upon a generating equipment overload. Use of the generating equipment to serve optional loads shall not constitute "other purposes" as described in 4.4.1.1.7.1 and therefore shall not require multiple generator sets.

4.4.1.1.7.4 Where optional loads include contiguous or same-site facilities not covered in Chapters 12 through 20, provisions shall be made to meet the requirements of NFPA *101*, *Life Safety Code*, Article 700 of NFPA 70, *National Electrical Code* , and other applicable NFPA requirements for emergency egress under load-shed conditions.

4.4.1.1.8 Work Space or Room.

4.4.1.1.8.1 The EPS shall be installed in a separate room for Level 1 installations. EPSS equipment shall be permitted to be installed in this room. [**110:**7.2.1]

(A) The room shall have a minimum 2-hour fire rating or be located in an adequate enclosure located outside the building capable of resisting the entrance of snow or rain at a maximum wind velocity required by local building codes. [**110:**7.2.1.1]

4.4.1.1.8.2 The rooms, shelters, or separate buildings housing Level 1 or Level 2 EPSS equipment shall be designed and located to minimize the damage from flooding, including that caused by the following:

(1) Flooding resulting from fire fighting
(2) Sewer water backup
(3) Similar disasters or occurrences [**110:**7.2.3]

4.4.1.1.8.3 The EPS equipment shall be installed in a location that permits ready accessibility and a minimum of 76 cm (30 in.) from the skid rails' outermost point in the direction of access for inspection, repair, maintenance, cleaning, or replacement. This requirement shall not apply to units in outdoor housings. [**110:**7.2.5]

4.4.1.1.9* Capacity and Rating. The generator set(s) shall have sufficient capacity and proper rating to meet the maximum actual demand likely to be produced by the connected load of the essential electrical system(s) at any one time.

4.4.1.1.10 Load Pickup. The energy converters shall have the required capacity and response to pick up and carry the load within the time specified in Table 4.1(b) of NFPA 110, *Standard for Emergency and Standby Power Systems*, after loss of primary power.

4.4.1.1.11 Maintenance of Temperature. The EPS shall be heated as necessary to maintain the water jacket temperature determined by the EPS manufacturer for cold start and load acceptance for the type of EPSS. [**110:**5.3.1]

4.4.1.1.12 Heating, Cooling, and Ventilating.

4.4.1.1.12.1* With the EPS running at rated load, ventilation airflow shall be provided to limit the maximum air temperature in the EPS room to the maximum ambient air temperature required by the EPS manufacturer. [**110:**7.7.1]

(A) Consideration shall be given to all the heat rejected to the EPS equipment room by the energy converter, uninsulated or insulated exhaust pipes, and other heat-producing equipment. [**110:**7.7.1.1]

4.4.1.1.12.2 Air shall be supplied to the EPS equipment for combustion. [**110:**7.7.2]

(A) For EPS supplying Level 1 EPSS, ventilation air shall be supplied directly from a source outside of the building by an exterior wall opening or from a source outside the building by a 2-hour fire-rated air transfer system. [**110:**7.7.2.1]

(B) For EPS supplying Level 1 EPSS, discharge air shall be directed outside of the building by an exterior wall opening or to an exterior opening by a 2-hour fire-rated air transfer system. [**110:**7.7.2.2]

(C) Fire dampers, shutters, or other self-closing devices shall not be permitted in ventilation openings or ductwork for supply or return/discharge air to EPS equipment for Level 1 EPSS. [**110:**7.7.2.3]

4.4.1.1.12.3 Ventilation air supply shall be from outdoors or from a source outside of the building by an exterior wall opening or from a source outside the building by a 2-hour fire-rated air transfer system. [**110:**7.7.3]

4.4.1.1.12.4 Ventilation air shall be provided to supply and discharge cooling air for radiator cooling of the EPS when running at rated load. [**110:**7.7.4]

(A) Ventilation air supply and discharge for radiator cooled EPS shall have a maximum static restriction of 125 Pa (0.5 in.) of water column in the discharge duct at the radiator outlet. [**110:**7.7.4.1]

--`,,```,,,,````-`-`,,`,,`,`,,`---
Copyright National Fire Protection Association
Provided by IHS under license with NFPA
No reproduction or networking permitted without license from IHS
Not for Resale

(B) Radiator air discharge shall be ducted outdoors or to an exterior opening by a 2-hour fire-rated air transfer switch. [**110:**7.7.4.2]

4.4.1.1.12.5 Motor operated dampers, when used, shall be spring-operated to open and motor-closed. Fire dampers, shutters, or other self-closing devices shall not be permitted in ventilation openings or ductwork for supply or return/discharge air to EPS equipment for Level 1 EPSS. [**110:**7.7.5]

4.4.1.1.12.6 The ambient air temperature in the EPS equipment room or outdoor housing containing Level 1 rotating equipment shall be not less than 4.5°C (40°F). [**110:**7.7.6]

4.4.1.1.12.7 Units housed outdoors shall be heated as specified in 5.3.3 of NFPA 110, *Standard for Emergency and Standby Power Systems.* [**110:**7.7.7]

4.4.1.1.12.8 Design of the heating, cooling, and ventilation system for the EPS equipment room shall include provision for factors including, but not limited to, the following:

(1) Heat
(2) Cold
(3) Dust
(4) Humidity
(5) Snow and ice accumulations around housings
(6) Louvers
(7) Remote radiator fans
(8) Prevailing winds blowing against radiator fan discharge air [**110:**7.7.8]

4.4.1.1.13 Cranking Batteries. Internal combustion engine cranking batteries shall be in accordance with the battery requirements of NFPA 110, *Standard for Emergency and Standby Power Systems.*

4.4.1.1.14 Compressed Air Starting Devices. Other types of stored energy starting systems (except pyrotechnic) shall be permitted to be used where recommended by the manufacturer of the prime mover and subject to approval of the authority having jurisdiction, under the following conditions:

(1) Where two complete periods of cranking cycles are completed without replacement of the stored energy
(2) Where a means for automatic restoration from the emergency source of the stored energy is provided
(3) Where the stored energy system has the cranking capacity specified in 5.6.4.2.1 of NFPA 110, *Standard for Emergency and Standby Power Systems*
(4) Where the stored energy system has a "black start" capability in addition to normal discharge capability [**110:**5.6.4.1.2]

4.4.1.1.15 Fuel Supply. The fuel supply for the generator set shall comply with Sections 5.5 and 7.9 of NFPA 110, *Standard for Emergency and Standby Power Systems.*

4.4.1.1.16 Requirements for Safety Devices.

4.4.1.1.16.1 Internal Combustion Engines. Internal combustion engines serving generator sets shall be equipped with the following:

(1) A sensor device plus visual warning device to indicate a water-jacket temperature below those required in 4.4.1.1.11
(2) Sensor devices plus visual prealarm warning device to indicate the following:
    (a) High engine temperature (above manufacturer's recommended safe operating temperature range)
    (b) Low lubricating oil pressure (below manufacturer's recommended safe operating range)
    (c) Low water coolant level
(3) An automatic engine shutdown device plus visual device to indicate that a shutdown took place due to the following:
    (a) Overcrank (failed to start)
    (b) Overspeed
    (c) Low lubricating oil pressure
    (d) Excessive engine temperature
(4) A common audible alarm device to warn that any one or more of the prealarm or alarm conditions exist

4.4.1.1.16.2 Safety indications and shutdowns shall be in accordance with Table 4.4.1.1.16.2.

4.4.1.1.17 Alarm Annunciator. A remote annunciator, storage battery–powered, shall be provided to operate outside of the generating room in a location readily observed by operating personnel at a regular work station *(see Section 700.12 of* NFPA 70, *National Electrical Code).* The annunciator shall be hard-wired to indicate alarm conditions of the emergency or auxiliary power source as follows:

(1) Individual visual signals shall indicate the following:
    (a) When the emergency or auxiliary power source is operating to supply power to load
    (b) When the battery charger is malfunctioning
(2) Individual visual signals plus a common audible signal to warn of an engine-generator alarm condition shall indicate the following:
    (a) Low lubricating oil pressure
    (b) Low water temperature (below those required in 4.4.1.1.11)
    (c) Excessive water temperature
    (d) Low fuel — when the main fuel storage tank contains less than a 4-hour operating supply
    (e) Overcrank (failed to start)
    (f) Overspeed

4.4.1.1.17.1* A remote, common audible alarm shall be provided as specified in 4.4.1.1.17.4 that is powered by the storage battery and located outside of the EPS service room at a work site observable by personnel. [**110:**5.6.6]

4.4.1.1.17.2 An alarm-silencing means shall be provided, and the panel shall include repetitive alarm circuitry so that, after the audible alarm has been silenced, it reactivates after the fault condition has been cleared and has to be restored to its normal position to be silenced again. [**110:**5.6.6.1]

4.4.1.1.17.3 In lieu of the requirement of 5.6.6.1 of NFPA 110, a manual alarm-silencing means shall be permitted that silences the audible alarm after the occurrence of the alarm condition, provided such means do not inhibit any subsequent alarms from sounding the audible alarm again without further manual action. [**110:**5.6.6.2]

4.4.1.1.17.4 Individual alarm indication to annunciate any of the conditions listed in Table 4.4.1.1.16.2 shall have the following characteristics:

(1) Battery-powered
(2) Visually indicated
(3) Have additional contacts or circuits for a common audible alarm that signals locally and remotely when any of the itemized conditions occurs
(4) Have a lamp test switch(es) to test the operation of all alarm lamps

--`,,```,,,,````-`-`,,`,,`,`,,`---
Copyright National Fire Protection Association
Provided by IHS under license with NFPA
No reproduction or networking permitted without license from IHS
Not for Resale

Table 4.4.1.1.16.2 Safety Indications and Shutdowns

Indicator Function (at Battery Voltage)	Level 1		
	C.V.	S.	R.A.
(a) Overcrank	X	X	X
(b) Low water temperature	X		X
(c) High engine temperature prealarm	X		X
(d) High engine temperature	X	X	X
(e) Low lube oil pressure prealarm	X		X
(f) Low lube oil pressure	X	X	X
(g) Overspeed	X	X	X
(h) Low fuel main tank	X		X
(i) Low coolant level	X	O	X
(j) EPS supplying load	X		
(k) Control switch not in automatic position	X		X
(l) High battery voltage	X		
(m) Low cranking voltage	X		X
(n) Low voltage in battery	X		
(o) Battery charger ac failure	X		
(p) Lamp test	X		
(q) Contacts for local and remote common alarm	X		X
(r) Audible alarm silencing switch			X
(s) Low starting air pressure	X		
(t) Low starting hydraulic pressure	X		
(u) Air shutdown damper when used	X	X	X
(v) Remote emergency stop		X	

C.V.: Control panel–mounted visual. S.: Shutdown of EPS indication. R.A.: Remote audible. X: Required. O: Optional.

Notes:

1. Item (p) shall be provided, but a separate remote audible signal shall not be required when the regular work site in 5.6.6 of NFPA 110 is staffed 24 hours a day.
2. Item (b) is not required for combustion turbines.
3. Item (r) or (s) shall apply only where used as a starting method.
4. Item (j): EPS ac ammeter shall be permitted for this function.
5. All required C.V. functions shall be visually annunciated by a remote, common visual indicator.
6. All required functions indicated in the R.A. column shall be annunciated by a remote, common audible alarm as required in 5.6.5.2(4) of NFPA 110.
7. Item (i) on gaseous systems shall require a low gas pressure alarm.
8. Item (b) shall be set at 11°C (20°F) below the regulated temperature determined by the EPS manufacturer as required in 5.3.1 of NFPA 110.

4.4.1.2 Battery. Battery systems shall meet all requirements of Article 700 of NFPA 70, *National Electrical Code.*

4.4.2* Distribution (Type 1 EES).

4.4.2.1 General Requirements.

4.4.2.1.1 Electrical characteristics of the transfer switches shall be suitable for the operation of all functions and equipment they are intended to supply.

4.4.2.1.2 Switch Rating. The rating of the transfer switches shall be adequate for switching all classes of loads to be served and for withstanding the effects of available fault currents without contact welding.

4.4.2.1.3 Automatic Transfer Switch Classification. Each automatic transfer switch 600 volts or below shall be listed for the purpose and approved for emergency electrical service *(see Section 700.3 of* NFPA 70, *National Electrical Code)* as a complete assembly.

4.4.2.1.4 Automatic Transfer Switch Features.

4.4.2.1.4.1 Source Monitoring.

(A)* Undervoltage-sensing devices shall be provided to monitor all ungrounded lines of the primary source of power as follows:

(1) When the voltage on any phase falls below the minimum operating voltage of any load to be served, the transfer switch shall automatically initiate engine start and the process of transfer to the emergency power supply (EPS).
(2) *When the voltage on all phases of the primary source returns to within specified limits for a designated period of time, the process of transfer back to primary power shall be initiated. [**110:**6.2.2.1]

(B) Both voltage-sensing and frequency-sensing equipment shall be provided to monitor one ungrounded line of the EPS power. [**110:**6.2.2.2]

(C) Transfer to the EPS shall be inhibited until the voltage and frequency are within a specified range to handle loads to be served. [**110:**6.2.2.3]

--`,,```,,,,````-`-`,,`,,`,`,,`---

Copyright National Fire Protection Association
Provided by IHS under license with NFPA
No reproduction or networking permitted without license from IHS
Not for Resale

(D) Sensing equipment shall not be required in the transfer switch, provided it is included with the engine control panel. [**110:**6.2.2.3(A)]

(E) Frequency-sensing equipment shall not be required for monitoring the public utility source where used as an EPS, as permitted by 5.1.4 of NFPA 110, *Standard for Emergency and Standby Power Systems.* [**110:**6.2.2.3(B)]

4.4.2.1.4.2 Interlocking. Mechanical interlocking or an approved alternate method shall prevent the inadvertent interconnection of the primary power supply and the EPS, or any two separate sources of power. [**110:**6.2.3]

4.4.2.1.4.3* Manual Operation.

(A) Instruction and equipment shall be provided for safe manual nonelectric transfer in the event the transfer switch malfunctions. [**110:**6.2.4.1]

(B) An automatic transfer switch shall visually annunciate when "not-in-automatic." [**110:**6.2.4.2]

4.4.2.1.4.4* Time Delay on Starting of EPS. A time-delay device shall be provided to delay starting of the EPS. The timer shall prevent nuisance starting of the EPS and possible subsequent load transfer in the event of harmless momentary power dips and interruptions of the primary source. [**110:**6.2.5]

4.4.2.1.4.5 Time Delay at Engine Control Panel. Time delays shall be permitted to be located at the engine control panel in lieu of in the transfer switches. [**110:**6.2.6]

4.4.2.1.4.6 Time Delay on Transfer to EPS. An adjustable time-delay device shall be provided to delay transfer and sequence load transfer to the EPS to avoid excessive voltage drop when the transfer switch is installed for Level 1 use. [**110:**6.2.7]

(A) Time Delay Commencement. The time delay shall commence when proper EPS voltage and frequency are achieved. [**110:**6.2.7.1]

(B) Time Delay at Engine Control Panel. Time delays shall be permitted to be located at the engine control panel in lieu of in the transfer switches. [**110:**6.2.7.2]

4.4.2.1.4.7* Time Delay on Retransfer to Primary Source. An adjustable time-delay device with automatic bypass shall be provided to delay retransfer from the EPS to the primary source of power, and allow the primary source to stabilize before retransfer of the load. [**110:**6.2.8]

4.4.2.1.4.8 Time Delay Bypass If EPS Fails. The time delay shall be automatically bypassed if the EPS fails. [**110:**6.2.9]

(A) The transfer switch shall be permitted to be programmed for a manually initiated retransfer to the primary source to provide for a planned momentary interruption of the load. [**110:**6.2.9.1]

(B) If used, the arrangement in 6.2.9.1 of NFPA 110, *Standard for Emergency and Standby Power Systems*, shall be provided with a bypass feature to allow automatic retransfer in the event that the EPS fails and the primary source is available. [**110:**6.2.9.2]

4.4.2.1.4.9 Time Delay on Engine Shutdown. A minimum time delay of 5 minutes shall be provided for unloaded running of the EPS prior to shutdown to allow for engine cooldown. [**110:**6.2.10]

(A) The minimum 5-minute delay shall not be required on small (15 kW or less) air-cooled prime movers. [**110:**6.2.10.1]

(B) A time-delay device shall not be required, provided it is included with the engine control panel, or if a utility feeder is used as an EPS. [**110:**6.2.10.2]

4.4.2.1.4.10 Engine Generator Exercising Timer. A program timing device shall be provided to exercise the EPS as described in Chapter 8 of NFPA 110, *Standard for Emergency and Standby Power Systems.* [**110:**6.2.11]

(A) Transfer switches for Level 1 and Level 2 shall transfer the connected load to the EPS and immediately return to primary power automatically in case of the EPS failure. [**110:**6.2.11.1]

(B) Exercising timers shall be permitted to be located at the engine control panel in lieu of in the transfer switches. [**110:**6.2.11.2]

(C) A program timing device shall not be required in health care facilities that provide scheduled testing in accordance with NFPA 99, *Standard for Health Care Facilities.* [**110:**6.2.11.3]

4.4.2.1.4.11 Test Switch. A test means shall be provided on each automatic transfer switch (ATS) that simulates failure of the primary power source and then transfers the load to the EPS. [**110:**6.2.12]

4.4.2.1.4.12* Indication of Switch Position. Two pilot lights with identification nameplates or other approved position indicators shall be provided to indicate the transfer switch position. [**110:**6.2.13]

4.4.2.1.4.13 Motor Load Transfer. Provisions shall be included to reduce currents resulting from motor load transfer if such currents could damage EPSS equipment or cause nuisance tripping of EPSS overcurrent protective devices. [**110:**6.2.14]

4.4.2.1.4.14* Isolation of Neutral Conductors. Provisions shall be included for ensuring continuity, transfer, and isolation of the primary and the EPS neutral conductors wherever they are separately grounded to achieve ground-fault sensing. [**110:**6.2.15]

4.4.2.1.4.15* Nonautomatic Transfer Switch Features. Switching devices shall be mechanically held and shall be operated by direct manual or electrical remote manual control. [**110:**6.2.16]

(A) Interlocking. Reliable mechanical interlocking, or an approved alternate method, shall prevent the inadvertent interconnection of the primary power source and the EPS. [**110:**6.2.16.1]

(B) Indication of Switch Position. Two pilot lights with identification nameplates, or other approved position indicators, shall be provided to indicate the switch position. [**110:**6.2.16.2]

4.4.2.1.5 Nonautomatic Transfer Device Classification. Nonautomatic transfer devices 600 volts or below shall be listed for the purpose and approved.

4.4.2.1.6 Nonautomatic Transfer Device Features.

4.4.2.1.6.1 General. Switching devices shall be mechanically held and shall be operated by direct manual or electrical remote manual control. [**110:**6.2.16]

4.4.2.1.6.2 Interlocking. Reliable mechanical interlocking, or an approved alternate method, shall prevent the inadvertent interconnection of the primary power source and the EPS. [**110:**6.2.16.1]

4.4.2.1.6.3 Indication of Switch Position. Two pilot lights with identification nameplates, or other approved position indicators, shall be provided to indicate the switch position. [**110:**6.2.16.2]

Copyright National Fire Protection Association
Provided by IHS under license with NFPA
No reproduction or networking permitted without license from IHS
Not for Resale

4.4.2.1.7 Bypass-Isolation Switches. Bypass-isolation switches shall be permitted for bypassing and isolating the transfer switch and installed in accordance with 4.4.2.1.7.1 through 4.4.2.1.7.4. [**110:**6.4.1]

4.4.2.1.7.1 Bypass-Isolation Switch Rating. The bypass-isolation switch shall have a continuous current rating and a current rating compatible with that of the associated transfer switch. [**110:**6.4.2]

4.4.2.1.7.2 Bypass-Isolation Switch Classification. Each bypass-isolation switch shall be listed for emergency electrical service as a completely factory-assembled and factory-tested apparatus. [**110:**6.4.3]

4.4.2.1.7.3* Operation. With the transfer switch isolated or disconnected, the bypass-isolation switch shall be designed so it can function as an independent nonautomatic transfer switch and allow the load to be connected to either power source. [**110:**6.4.4]

4.4.2.1.7.4 Reconnection of Transfer Switch. Reconnection of the transfer switch shall be possible without a load interruption greater than the maximum time, in seconds, specified by the type of system. [**110:**6.4.5]

4.4.2.2 Specific Requirements.

4.4.2.2.1* General.

4.4.2.2.1.1 The emergency system shall be limited to circuits essential to life safety and critical patient care and are designated the life safety branch and the critical branch.

4.4.2.2.1.2 The equipment system shall supply major electrical equipment necessary for patient care and basic Type 1 operation.

4.4.2.2.1.3 Both systems shall be arranged for connection, within time limits specified in this chapter, to an alternate source of power following a loss of the normal source.

4.4.2.2.1.4 The number of transfer switches to be used shall be based upon reliability, design, and load considerations. Each branch of the emergency system and each equipment system shall have one or more transfer switches. One transfer switch shall be permitted to serve one or more branches or systems in a facility with a continuous load on the switch of 150 kVA (120 kW) or less.

4.4.2.2.2 Emergency System.

4.4.2.2.2.1 General. Those functions of patient care depending on lighting or appliances that shall be permitted to be connected to the emergency system are divided into two mandatory branches, described in 4.4.2.2.2.2 and 4.4.2.2.2.3.

4.4.2.2.2.2 Life Safety Branch. The life safety branch of the emergency system shall supply power for the following lighting, receptacles, and equipment:

(1) Illumination of means of egress as required in NFPA *101*, *Life Safety Code*
(2) Exit signs and exit direction signs required in NFPA *101*, *Life Safety Code*
(3) Alarm and alerting systems including the following:
    (a) Fire alarms
    (b) Alarms required for systems used for the piping of nonflammable medical gases as specified in Chapter 5, Gas and Vacuum Systems
(4)*Hospital communication systems, where used for issuing instruction during emergency conditions
(5) Generator set location: Task illumination, battery charger for emergency battery-powered lighting unit(s), and selected receptacles at the generator set location and essential electrical system transfer switch locations
(6) Elevator cab lighting, control, communication, and signal systems
(7) Automatically operated doors used for building egress
(8) The auxiliary functions of fire alarm combination systems complying with *NFPA 72, National Fire Alarm Code*

No function other than those listed in items 4.4.2.2.2.2(1) through 4.4.2.2.2.2(8) shall be connected to the life safety branch.

4.4.2.2.2.3* Critical Branch. The critical branch shall be permitted to be subdivided into two or more branches. The critical branch of the emergency system shall supply power for task illumination, fixed equipment, selected receptacles, and selected power circuits serving the following areas and functions related to patient care:

(1) Critical care areas that utilize anesthetizing gases, task illumination, selected receptacles, and fixed equipment
(2) The isolated power systems in special environments
(3) Task illumination and selected receptacles in the following:
    (a) Patient care areas, including infant nurseries, selected acute nursing areas, psychiatric bed areas (omit receptacles), and ward treatment rooms
    (b) Medication preparation areas
    (c) Pharmacy dispensing areas
    (d) Nurses' stations (unless adequately lighted by corridor luminaires)
(4) Additional specialized patient care task illumination and receptacles, where needed
(5) Nurse call systems
(6) Blood, bone, and tissue banks
(7)*Telephone equipment rooms and closets
(8) Task illumination, selected receptacles, and selected power circuits for the following areas:
    (a) General care beds with at least one duplex receptacle per patient bedroom, and task illumination as required by the governing body of the health care facility
    (b) Angiographic labs
    (c) Cardiac catheterization labs
    (d) Coronary care units
    (e) Hemodialysis rooms or areas
    (f) Emergency room treatment areas (selected)
    (g) Human physiology labs
    (h) Intensive care units
    (i) Postoperative recovery rooms (selected)
(9) Additional task illumination, receptacles, and selected power circuits needed for effective facility operation. Single-phase fractional horsepower motors shall be permitted to be connected to the critical branch.

4.4.2.2.3 Equipment System.

4.4.2.2.3.1 General. The equipment system shall be connected to equipment described in 4.4.2.2.3.3 through 4.4.2.2.3.5.

4.4.2.2.3.2 Connection to Alternate Power Source. The equipment system shall be installed and connected to the alternate power source, such that equipment described in 4.4.2.2.3.4 is automatically restored to operation at appropriate time-lag intervals following the energizing of the emergency system. Its arrangement shall also provide for the subsequent connection of equipment described in 4.4.2.2.3.5.

Copyright National Fire Protection Association
Provided by IHS under license with NFPA
No reproduction or networking permitted without license from IHS
Not for Resale

4.4.2.2.3.3 AC Equipment for Nondelayed Automatic Connection. Generator accessories, including, but not limited to, the transfer fuel pump, electrically operated louvers, and other generator accessories essential for generator operation, shall be arranged for automatic connection to the alternate power source.

4.4.2.2.3.4* Equipment for Delayed-Automatic Connection. The following equipment shall be permitted to be arranged for delayed-automatic connection to the alternate power source:

(1) Central suction systems serving medical and surgical functions, including controls. It shall be permitted to place such suction systems on the critical branch.
(2) Sump pumps and other equipment required to operate for the safety of major apparatus, including associated control systems and alarms.
(3) Compressed air systems serving medical and surgical functions, including controls. It shall be permitted to place such air systems on the critical branch.
(4) Smoke control and stair pressurization systems.
(5) Kitchen hood supply and/or exhaust systems, if required to operate during a fire in or under the hood.
(6) Supply, return, and exhaust ventilating systems for airborne infectious/isolation rooms, protective environment rooms, exhaust fans for laboratory fume hoods, nuclear medicine areas where radioactive material is used, ethylene oxide evacuation, and anesthetic evacuation. Where delayed automatic connection is not appropriate, such ventilation systems shall be permitted to be placed on the critical branch.

4.4.2.2.3.5* Equipment for Delayed-Automatic or Manual Connection. The following equipment shall be permitted to be arranged for either delayed-automatic or manual connection to the alternate power source *(also see A.4.4.2.2.3.4)*:

(1) Heating equipment to provide heating for operating, delivery, labor, recovery, intensive care, coronary care, nurseries, infection/isolation rooms, emergency treatment spaces, and general patient rooms; and pressure maintenance (jockey or make-up) pump(s) for water-based fire protection systems.
(2)*Heating of general patient rooms during disruption of the normal source shall not be required under any of the following conditions:
   (a) The outside design temperature is higher than –6.7°C (+20°F).
   (b) The outside design temperature is lower than –6.7°C (+20°F) and a selected room(s) is provided for the needs of all confined patients [then only such room(s) need be heated].
   (c) The facility is served by a dual source of normal power as described in 4.3.2.1.
(3) Elevator(s) selected to provide service to patient, surgical, obstetrical, and ground floors during interruption of normal power.
(4) Supply, return, and exhaust ventilating systems for surgical and obstetrical delivery suites, intensive care, coronary care, nurseries, and emergency treatment spaces.
(5) Hyperbaric facilities.
(6) Hypobaric facilities.
(7) Autoclaving equipment shall be permitted to be arranged for either automatic or manual connection to the alternate source.
(8) Controls for equipment listed in 4.4.2.2.3.
(9)*Other selected equipment shall be permitted to be served by the equipment system.

4.4.2.2.4 Wiring Requirements.

4.4.2.2.4.1* Separation from Other Circuits. The life safety branch and critical branch of the emergency system shall be kept entirely independent of all other wiring and equipment.

4.4.2.2.4.2 Receptacles. The requirements for receptacles shall comply with 4.4.2.2.4.2(A) and 4.4.2.2.4.2(B).

(A) The number of receptacles on a single branch circuit for areas described in 4.4.2.2.2.3(8) shall be minimized to limit the effects of a branch circuit outage. Branch circuit overcurrent devices shall be readily accessible to authorized personnel.

(B)* The electrical receptacles or the cover plates for the electrical receptacles supplied from the emergency system shall have a distinctive color or marking so as to be readily identifiable.

4.4.2.2.4.3 Switches. Switches installed in the lighting circuits connected to the essential electrical system shall comply with Article 700, Section V, of NFPA 70, *National Electrical Code*.

4.4.2.2.4.4 Mechanical Protection of the Emergency System. The wiring of the emergency system shall be mechanically protected by raceways, as defined in NFPA 70, *National Electrical Code*.

4.4.2.2.4.5 Flexible power cords of appliances or other utilization equipment connected to the emergency system shall not be required to be enclosed in raceways.

4.4.2.2.4.6 Secondary circuits of transformer-powered communication or signaling systems shall not be required to be enclosed in raceways unless otherwise specified by Chapters 7 or 8 of NFPA 70, *National Electrical Code*.

4.4.3 Performance Criteria and Testing (Type 1 EES).

4.4.3.1 Source. The branches of the emergency system shall be installed and connected to the alternate power source specified in 4.4.1.1.4 and 4.4.1.1.5 so that all functions specified herein for the emergency system shall be automatically restored to operation within 10 seconds after interruption of the normal source.

4.4.3.2 Transfer Switches.

4.4.3.2.1 All ac-powered support and accessory equipment necessary to the operation of the EPS shall be supplied from the load side of the automatic transfer switch(es), or the output terminals of the EPS, ahead of the main EPS overcurrent protection, as necessary, to ensure continuity of the EPSS operation and performance. [**110:**7.12.5]

4.4.3.2.2 The essential electrical system shall be served by the normal power source except when the normal power source is interrupted or drops below a predetermined voltage level. Settings of the sensors shall be determined by careful study of the voltage requirements of the load.

4.4.3.2.3 Failure of the normal source shall automatically start the alternate source generator after a short delay as described in 4.4.2.1.4.4. When the alternate power source has attained a voltage and frequency that satisfies minimum operating requirements of the essential electrical system, the load shall be connected automatically to the alternate power source.

4.4.3.2.4 Upon connection of the alternate power source, the loads comprising the emergency system shall be automatically re-energized. The load comprising the equipment system shall be connected either automatically after a time

Copyright National Fire Protection Association
Provided by IHS under license with NFPA
No reproduction or networking permitted without license from IHS
Not for Resale

delay as described in 4.4.2.1.4.6 or nonautomatically and in such a sequential manner as not to overload the generator.

4.4.3.2.5 When the normal power source is restored, and after a time delay as described in 4.4.2.1.4.7, the automatic transfer switches shall disconnect the alternate source of power and connect the loads to the normal power source. The alternate power source generator set shall continue to run unloaded for a preset time delay as described in 4.4.2.1.4.9.

4.4.3.2.6 If the emergency power source fails and the normal power source has been restored, retransfer to the normal source of power shall be immediate, bypassing the retransfer delay timer.

4.4.3.2.7 If the emergency power source fails during a test, provisions shall be made to immediately retransfer to the normal source.

4.4.3.2.8 Nonautomatic transfer switching devices shall be restored to the normal power source as soon as possible after the return of the normal source or at the discretion of the operator.

4.4.4 Administration (Type 1 EES).

4.4.4.1 Maintenance and Testing of Essential Electrical System.

4.4.4.1.1 Maintenance and Testing of Alternate Power Source and Transfer Switches.

4.4.4.1.1.1 Maintenance of Alternate Power Source. The generator set or other alternate power source and associated equipment, including all appurtenant parts, shall be so maintained as to be capable of supplying service within the shortest time practicable and within the 10-second interval specified in 4.4.1.1.10 and 4.4.3.1. Maintenance shall be performed in accordance with NFPA 110, *Standard for Emergency and Standby Power Systems*, Chapter 8.

4.4.4.1.1.2 Inspection and Testing. Criteria, conditions, and personnel requirements shall be in accordance with 4.4.4.1.1.2(A) through 4.4.4.1.1.2(C).

(A)* Test Criteria. Generator sets shall be tested 12 times a year with testing intervals between not less than 20 days or exceeding 40 days. Generator sets serving emergency and equipment systems shall be tested in accordance with NFPA 110, *Standard for Emergency and Standby Power Systems*, Chapter 8.

(B) Test Conditions. The scheduled test under load conditions shall include a complete simulated cold start and appropriate automatic and manual transfer of all essential electrical system loads.

(C) Test Personnel. The scheduled tests shall be conducted by competent personnel. The tests are needed to keep the machines ready to function and, in addition, serve to detect causes of malfunction and to train personnel in operating procedures.

4.4.4.1.2 Maintenance and Testing of Circuitry.

4.4.4.1.2.1* Circuit Breakers. Main and feeder circuit breakers shall be inspected annually and a program for periodically exercising the components shall be established according to manufacturer's recommendations.

4.4.4.1.2.2 Insulation Resistance. The resistance readings of main feeder insulation shall be taken prior to acceptance and whenever damage is suspected.

4.4.4.1.3 Maintenance of Batteries. Batteries for on-site generators shall be maintained in accordance with NFPA 110, *Standard for Emergency and Standby Power Systems.*

4.4.4.2 Recordkeeping. A written record of inspection, performance, exercising period, and repairs shall be regularly maintained and available for inspection by the authority having jurisdiction.

4.5 Essential Electrical System Requirements — Type 2.

4.5.1 Sources (Type 2 EES). The requirements for sources for Type 2 essential electrical systems shall conform to those listed in 4.4.1.

4.5.2 Distribution (Type 2 EES).

4.5.2.1 General. The distribution requirements for Type 2 essential electrical systems shall conform to those listed in 4.4.2.1.

4.5.2.2 Specific Requirements.

4.5.2.2.1* General. The number of transfer switches to be used shall be based upon reliability, design, and load considerations. Each branch of the emergency system and each critical system shall have one or more transfer switches. One transfer switch shall be permitted to serve one or more branches or systems in a facility with a continuous load on the switch of 150 kVA (120 kW) or less.

4.5.2.2.2 Emergency System. The emergency system shall supply power for lighting, receptacles, and equipment as follows:

(1) Illumination of means of egress in accordance with NFPA *101, Life Safety Code*
(2) Exit signs and exit directional signs in accordance with NFPA *101, Life Safety Code*
(3) Alarm and alerting systems, including the following:
    (a) Fire alarms
    (b) Alarms required for systems used for the piping of nonflammable medical gases as specified in Chapter 5, Gas and Vacuum Systems
(4)*Communication systems, where used for issuing instructions during emergency conditions
(5) Sufficient lighting in dining and recreation areas to provide illumination to exit ways of a minimum of 5 ft-candles
(6) Task illumination and selected receptacles at the generator set location
(7) Elevator cab lighting, control, communication, and signal systems

No function other than those listed in 4.5.2.2.2(1) through 4.5.2.2.2(7) shall be connected to the emergency system.

4.5.2.2.3 Critical System.

4.5.2.2.3.1 General. The critical system shall be so installed and connected to the alternate power source that equipment listed in 4.5.2.2.3.2 shall be automatically restored to operation at appropriate time-lag intervals following the restoration of the emergency system to operation. Its arrangement shall also provide for the additional connection of equipment listed in 4.5.2.2.3.3.

4.5.2.2.3.2 AC Equipment for Nondelayed Automatic Connection. Generator accessories, including but not limited to, the transfer fuel pump, electrically operated louvers, and other generator accessories essential for generator operation, shall be arranged for automatic connection to the alternative power source.

Copyright National Fire Protection Association
Provided by IHS under license with NFPA
No reproduction or networking permitted without license from IHS
Not for Resale

4.5.2.2.3.3 Delayed-Automatic Connections to Critical System. The following equipment shall be permitted to be connected to the critical system and be arranged for delayed-automatic connection to the alternate power source:

(1) Task illumination and selected receptacles in the following:
   (a) Patient care areas
   (b) Medication preparation areas
   (c) Pharmacy dispensing areas
   (d) Nurses' stations (unless adequately lighted by corridor luminaires)
(2) Supply, return, and exhaust ventilating systems for airborne infectious isolation rooms
(3) Sump pumps and other equipment required to operate for the safety of major apparatus and associated control systems and alarms
(4) Smoke control and stair pressurization systems
(5) Kitchen hood supply and/or exhaust systems, if required to operate during a fire in or under the hood

4.5.2.2.3.4* Delayed-Automatic or Manual Connections to Critical System. The equipment in 4.5.2.2.3.4(A) and 4.5.2.2.3.4(B) shall be permitted to be connected to the critical system and be arranged for either delayed-automatic or manual connection to the alternate power source.

(A) Heating Equipment to Provide Heating for General Patient Rooms. Heating of general patient rooms during disruption of the normal source shall not be required under any of the following conditions:

(1)*The outside design temperature is higher than −6.7°C (+20°F).
(2) The outside design temperature is lower than −6.7°C (+20°F) and, where a selected room(s) is provided for the needs of all confined patients, then only such room(s) need be heated.
(3) The facility is served by a dual source of normal power as described in A.4.4.1.1.1.

(B)* Elevator Service. In instances where interruptions of power would result in elevators stopping between floors, throw-over facilities shall be provided to allow the temporary operation of any elevator for the release of passengers.

(C) Optional Connections to the Critical System. Additional illumination, receptacles, and equipment shall be permitted to be connected only to the critical system.

(D) Multiple Systems. Where one switch serves multiple systems as permitted under 4.5.2.2, transfer for all loads shall be nondelayed automatic.

4.5.2.2.4 Wiring Requirements.

4.5.2.2.4.1* Separation from Other Circuits. The emergency system shall be kept entirely independent of all other wiring and equipment.

4.5.2.2.4.2* Receptacles. The electrical receptacles or the cover plates for the electrical receptacles supplied from the emergency system shall have a distinctive color or marking so as to be readily identifiable.

4.5.3 Performance Criteria and Testing (Type 2 EES).

4.5.3.1 Source. The emergency system shall be installed and connected to the alternate source of power specified in 4.4.1.1.4 and 4.4.1.1.5 so that all functions specified herein for the emergency system will be automatically restored to operation within 10 seconds after interruption of the normal source.

4.5.3.2 Transfer Switches.

4.5.3.2.1 The essential electrical system shall be served by the normal power source until the normal power source is interrupted or drops below a predetermined voltage level. Settings of the sensors shall be determined by careful study of the voltage requirements of the load.

4.5.3.2.2 Failure of the normal source shall automatically start the alternate source generator, after a short delay as described in 4.4.2.1.4.4. When the alternate power source has attained a voltage and frequency that satisfies minimum operating requirements of the essential electrical system, the load shall be connected automatically to the alternate power source.

4.5.3.2.2.1 All ac-powered support and accessory equipment necessary to the operation of the EPS shall be supplied from the load side of the automatic transfer switch(es), or the output terminals of the EPS, ahead of the main EPS overcurrent protection to ensure continuity of the EPSS operation and performance.

4.5.3.2.3 Upon connection of the alternate power source, the loads comprising the emergency system shall be automatically reenergized. The loads comprising the critical system shall be connected either automatically after a time delay as described in 4.4.2.1.4.6 or nonautomatically and in such a sequential manner as not to overload the generator.

4.5.3.2.4 When the normal power source is restored, and after a time delay as described in 4.4.2.1.4.7, the automatic transfer switches shall disconnect the alternate source of power and connect the loads to the normal power source. The alternate power source generator set shall continue to run unloaded for a preset time delay as described in 4.4.2.1.4.9.

4.5.3.2.5 If the emergency power source fails and the normal power source has been restored, retransfer to the normal source of power shall be immediate, bypassing the retransfer delay timer.

4.5.3.2.6 If the emergency power source fails during a test, provisions shall be made to immediately retransfer to the normal source.

4.5.3.2.7 Nonautomatic transfer switching devices shall be restored to the normal power source as soon as possible after the return of the normal source or at the discretion of the operator.

4.5.4 Administration (Type 2 EES).

4.5.4.1 Maintenance and Testing of Essential Electrical System.

4.5.4.1.1 Maintenance and Testing of Alternate Power Source and Transfer Switches.

4.5.4.1.1.1 Maintenance of Alternate Power Source. The generator set or other alternate power source and associated equipment, including all appurtenant parts, shall be so maintained as to be capable of supplying service within the shortest time practicable and within the 10-second interval specified in 4.4.1.1.7 and 4.4.3.1.

4.5.4.1.1.2 Inspection and Testing. Generator sets shall be inspected and tested in accordance with 4.4.4.1.1.2.

4.5.4.1.2 Maintenance and Testing of Circuitry. Circuitry shall be maintained and tested in accordance with 4.4.4.1.2.

4.5.4.1.3 Maintenance of Batteries. Batteries shall be maintained in accordance with 4.4.4.1.3.

Copyright National Fire Protection Association
Provided by IHS under license with NFPA
No reproduction or networking permitted without license from IHS
Not for Resale

4.5.4.2 Recordkeeping. A written record of inspection, performance, exercising period, and repairs shall be regularly maintained and available for inspection by the authority having jurisdiction.

4.6 Essential Electrical System Requirements — Type 3.

4.6.1 Sources (Type 3 EES). The alternate source of power for the system shall be specifically designed for this purpose and shall be either a generator, battery system, or self-contained battery integral with the equipment.

4.6.1.1 Generators shall conform to 4.4.1.1 and 4.4.1.1.6.2.

4.6.1.2 Battery systems shall conform to 4.4.1.2.

4.6.2 Distribution (Type 3 EES).

4.6.2.1 General. The distribution requirements for Type 3 essential electrical systems shall conform to those listed in 4.4.2.1.

4.6.2.2 Specific Requirements.

4.6.2.2.1* General.

4.6.2.2.2 Connection to the Essential Electrical System. The system shall supply power for task illumination that is related to the safety of life and that is necessary for the safe cessation of procedures in progress.

4.6.2.2.3 Wiring Requirements.

4.6.2.2.3.1 General. The design, arrangement, and installation of the system shall be in accordance with NFPA 70, *National Electrical Code*.

4.6.2.2.3.2* Receptacles. The cover plates for the electrical receptacles or the electrical receptacles themselves supplied from the emergency system shall have a distinctive color or marking so as to be readily identifiable.

4.6.3 Performance Criteria and Testing (Type 3 EES).

4.6.3.1 Source.

4.6.3.1.1 The emergency system shall have an alternate source of power separate and independent from the normal source that will be effective for a minimum of 1½ hours after loss of the normal source.

4.6.3.1.2 The emergency system shall be so arranged that, in the event of failure of normal power source, the alternate source of power shall be automatically connected to the load within 10 seconds.

4.6.3.2 Transfer Switches with Engine Generator Sets.

4.6.3.2.1 The operation of the equipment shall be arranged such that the load will be served by the normal source until the normal source is interrupted, or when the voltage drops below the setting of the voltage-sensing device. The settings of the voltage-sensing relays shall be determined by careful study of the voltage requirements of the load.

4.6.3.2.2 When the normal source is restored, and after a time delay as described in 4.4.2.1.4.7, the automatic transfer switch shall disconnect the alternate source of power and connect the loads to the normal power source.

4.6.3.2.3 If the alternate power source fails and the normal power source has been restored, retransfer to the normal source of power shall be immediate.

4.6.3.3 Transfer Switches with Battery System.

4.6.3.3.1 Failure of the normal source shall automatically transfer the load to the battery system.

4.6.3.3.2 Retransfer to the normal source shall be automatic upon restoration of the normal source.

4.6.4 Administration (Type 3 EES).

4.6.4.1 Maintenance and Testing.

4.6.4.1.1 Maintenance and Testing of Alternate Power Source and Transfer Switches.

4.6.4.1.1.1 Maintenance of Alternate Power Source. The generator set or other alternate power source and associated equipment, including all appurtenant parts, shall be so maintained as to be capable of supplying service within the shortest time practicable and within the 10-second interval specified in 4.4.1.1.10 and 4.6.3.1.2.

4.6.4.1.1.2 Inspection and Testing. Generator sets shall be inspected and tested in accordance with 4.4.4.1.1.2.

4.6.4.1.1.3 Stored Energy Power Source. Maintenance and testing of stored emergency power supply systems shall be in accordance with NFPA 111, *Standard on Stored Electrical Energy Emergency and Standby Power Systems*, Section 6.1 through 6.4.5.

4.6.4.1.2 Maintenance and Testing Circuitry. Circuitry shall be maintained and tested in accordance with 4.4.4.1.2.

4.6.4.1.3 Maintenance of Batteries. Batteries shall be maintained in accordance with 4.4.4.1.3.

4.6.4.2 Recordkeeping. A written record of inspection, performance, exercising period, and repairs shall be regularly maintained and available for inspection by the authority having jurisdiction.

Chapter 5 Gas and Vacuum Systems

5.1 Level 1 Piped Gas and Vacuum Systems.

5.1.1* Applicability.

5.1.1.1 These requirements shall apply to health care facilities that require Level 1 systems as referenced in Chapters 13 through 21.

5.1.1.2* Wherever the terms *medical gas* or *vacuum* occur, the provisions shall apply to all piped systems for oxygen, nitrous oxide, medical air, carbon dioxide, helium, medical–surgical vacuum, waste anesthetic gas disposal, and mixtures thereof. Wherever the name of a specific gas or vacuum service occurs, the provision shall apply only to that gas.

5.1.1.3 Wherever the term *medical–surgical vacuum* occurs, the provisions shall apply to systems for piped medical–surgical vacuum and piped waste anesthetic gas disposal (WAGD). Wherever the name of a specific vacuum service occurs, the provision shall apply only to that vacuum service.

5.1.1.4 An existing system that is not in strict compliance with the provisions of this standard shall be permitted to be continued in use as long as the authority having jurisdiction has determined that such use does not constitute a distinct hazard to life.

5.1.2 Nature of Hazards of Gas and Vacuum Systems. Potential fire and explosion hazards associated with positive pressure gas central piping systems and medical–surgical vacuum

Copyright National Fire Protection Association
Provided by IHS under license with NFPA
No reproduction or networking permitted without license from IHS
Not for Resale

systems shall be considered in the design, installation, testing, operation, and maintenance of these systems.

5.1.3* Level 1 Sources.

5.1.3.1 Central Supply System Identification and Labeling.

5.1.3.1.1* Only cylinders and containers constructed, tested, and maintained in accordance with U.S. Department of Transportation specifications and regulations shall be permitted to be used.

5.1.3.1.2 Cylinder contents shall be identified by attached labels or stencils naming the contents in accordance with CGA C-7, *Guide to the Preparation of Precautionary Labeling and Marking of Compressed Gas Containers.*

5.1.3.1.3 Liquid containers shall have additional product identification visible from all directions with a minimum of 51 mm (2 in.) high letters such as a 360 degree wraparound tape for medical liquid containers.

5.1.3.1.4 Cryogenic liquid containers shall be provided with gas-specific outlet connections in accordance with CGA V-5, *Diameter-Index Safety System (Noninterchangeable Low Pressure Connections for Medical Gas Applications)*, or CGA V-1, *Compressed Gas Association Standard for Compressed Gas Cylinder Valve Inlet and Outlet Connections.*

5.1.3.1.5 Cylinder and cryogenic liquid container outlet connections shall be affixed in such a manner as to be integral to the valve(s), unremovable with ordinary tools or so designed as to render the attachment point unusable when removed.

5.1.3.1.6 Contents of cylinders and cryogenic liquid containers shall be verified prior to use.

5.1.3.1.7 Labels shall not be defaced, altered, or removed, and connecting fittings shall not be modified.

5.1.3.1.8 Locations containing positive pressure gases other than oxygen and medical air shall have their door(s) labeled substantially as follows:

CAUTION

Positive Pressure Gases

NO Smoking or Open Flame

Room May Have Insufficient Oxygen

Open Door and Allow Room to Ventilate Before Entering

5.1.3.1.9 Locations containing central supply systems or cylinders containing only oxygen or medical air shall have their door(s) labeled as follows:

CAUTION

Medical Gases

NO Smoking or Open Flame

5.1.3.2 Central Supply System Operations.

5.1.3.2.1 The use of adapters or conversion fittings to adapt one gas-specific fitting to another shall be prohibited.

5.1.3.2.2 Cylinders and containers shall be handled in strict accordance with 5.1.13.

5.1.3.2.3 Only gas cylinders, reusable shipping containers, and their accessories shall be permitted to be stored in rooms containing central supply systems or gas cylinders.

5.1.3.2.4 No flammable materials, cylinders containing flammable gases, or containers containing flammable liquids shall be stored in rooms with gas cylinders.

5.1.3.2.5 Wooden racks for cylinder storage shall be permitted.

5.1.3.2.6 If cylinders are wrapped when received, the wrappers shall be removed prior to storage.

5.1.3.2.7 Cylinders not in use shall have their valve protection caps secured tightly in place.

5.1.3.2.8 Cylinders without correct markings or whose markings and gas-specific fittings do not match shall not be used.

5.1.3.2.9 Cryogenic liquid storage units intended to supply gas to the facility shall not be used to transfill other liquid storage vessels.

5.1.3.2.10 Care shall be exercised when handling cylinders that have been exposed to freezing temperatures or containers that contain cryogenic liquids to prevent injury to the skin.

5.1.3.2.11 Cylinders containing compressed gases and containers for volatile liquids shall be kept away from radiators, steam piping, and like sources of heat.

5.1.3.2.12 When cylinder valve protection caps are supplied, they shall be secured tightly in place unless the cylinder is connected for use.

5.1.3.2.13 Containers shall not be stored in a tightly closed space.

5.1.3.3* Central Supply System Locations.

5.1.3.3.1 Central supply systems shall be located to meet the criteria in 5.1.3.3.1.1 through 5.1.3.3.1.12.

5.1.3.3.1.1 Any of the following systems shall be permitted to be located together in the same outdoor enclosure:

(1) Manifolds for gas cylinders without reserve supply *(See 5.1.3.4.10.)*
(2) Manifolds for gas cylinders with reserve supply
(3) Manifolds for cryogenic liquid containers *(See 5.1.3.4.12.)*
(4) Bulk cryogenic liquid systems *(See 5.1.3.4.13.)*

5.1.3.3.1.2 Any of the following systems shall be permitted to be located together in the same indoor enclosure:

(1) Manifolds for gas cylinders without reserve supply *(See 5.1.3.4.10.)*
(2) Manifolds for gas cylinders with reserve supply
(3) Manifolds for cryogenic liquid containers *(See 5.1.3.4.12.)*
(4) In-building emergency reserves *(See 5.1.3.4.15.)*
(5) Instrument air standby headers *(See 5.1.3.8.5.)*

5.1.3.3.1.3 Any of the following systems shall be permitted to be located together in the same room:

(1) Medical air compressor supply sources *(See 5.1.3.5.3.)*
(2) Medical–surgical vacuum sources *(See 5.1.3.6.)*
(3) Waste anesthetic gas disposal (WAGD) sources *(See 5.1.3.7.)*
(4) Instrument air compressor sources *(See 5.1.3.8.)*
(5) Any other compressor, vacuum pump, or electrically powered machinery

5.1.3.3.1.4 Any system listed under 5.1.3.3.1.3 shall not be located in the same room with any system listed under 5.1.3.3.1.1 or 5.1.3.3.1.2, except instrument air reserve headers complying with 5.1.3.3.1.7 and 5.1.3.8.5 shall be allowed to be in the same room as an instrument air compressor.

Copyright National Fire Protection Association
Provided by IHS under license with NFPA
No reproduction or networking permitted without license from IHS
Not for Resale

5.1.3.3.1.5 Locations shall be chosen to permit access by delivery vehicles and management of cylinders (e.g., proximity to loading docks, access to elevators, passage of cylinders through public areas).

5.1.3.3.1.6 Indoor locations for oxygen, nitrous oxide, and mixtures of these gases shall not communicate with the following:

(1) Areas involved in critical patient care
(2) Anesthetizing locations
(3) Locations storing flammables
(4) Rooms containing open electrical contacts or transformers
(5) Storage tanks for flammable or combustible liquids
(6) Engines
(7) Kitchens
(8) Areas with open flames

5.1.3.3.1.7 Cylinders in use and in storage shall be prevented from reaching temperatures in excess of 54°C (130°F).

5.1.3.3.1.8 Central supply systems for nitrous oxide and carbon dioxide using cylinders or portable containers shall be prevented from reaching temperatures lower than the recommendations of the central supply system's manufacturer, but shall never be lower than –7°C (20°F) or greater than 54°C (130°F).

5.1.3.3.1.9 Central supply systems for oxygen with a total capacity connected and in storage of 566,335 L (20,000 ft^3) or more at standard temperature and pressure (STP) shall comply with NFPA 50, *Standard for Bulk Oxygen Systems at Consumer Sites*.

5.1.3.3.1.10 Central supply systems for nitrous oxide with a total capacity connected and in storage of 1451 kg (3200 lb) or more shall comply with CGA G-8.1, *Standard for Nitrous Oxide Systems at Consumer Sites*.

5.1.3.3.1.11 Central supply systems for carbon dioxide using permanently installed containers with product capacities greater than 454 kg (1000 lb) shall comply with CGA G-6.1, *Standard for Insulated Carbon Dioxide Systems at Consumer Sites*.

5.1.3.3.1.12 Central supply systems for carbon dioxide using permanently installed containers with product capacities of 454 kg (1000 lb) or less shall comply with CGA G-6.5, *Standard for Small, Stationary, Insulated Carbon Dioxide Supply Systems*.

5.1.3.3.2* Design and Construction. Locations for central supply systems and the storage of positive pressure gases shall meet the following requirements:

(1) Be constructed with access to move cylinders, equipment, and so forth, in and out of the location on hand trucks complying with 9.5.3.1.1
(2) Be secured with lockable doors or gates or otherwise secured
(3) If outdoors, be provided with an enclosure (wall or fencing) constructed of noncombustible materials
(4) If indoors, be constructed and use interior finishes of noncombustible or limited-combustible materials such that all walls, floors, ceilings and doors are of a minimum 1-hour fire resistance rating
(5) Be compliant with NFPA 70, *National Electrical Code*, for ordinary locations, with electrical devices located at or above 1520 mm (5 ft) above finished floor to avoid physical damage
(6) Be heated by indirect means (e.g., steam, hot water), if heat is required
(7) Be provided with racks, chains, or other fastenings to secure all cylinders, whether connected, unconnected, full, or empty, from falling
(8) Be supplied with electrical power compliant with the requirements for essential electrical systems as described in Chapter 4 of this document
(9) Have racks, shelves, and supports, where provided, constructed of noncombustible materials or limited-combustible materials

5.1.3.3.3 Ventilation.

5.1.3.3.3.1 Ventilation of Locations for Manifolds. Locations containing central supply systems or used for storing medical gas containers shall be ventilated to prevent the accumulation of medical gases from leaks and operation of cylinder or manifold overpressure safety devices in accordance with 5.1.3.3.3.1(A) through 5.1.3.3.3.1(G).

(A) Indoor supply systems shall have all relief valves vented per 5.1.3.4.6.1(4) through 5.1.3.4.6.1(9).

(B) Where the total volume of medical gases connected and in storage is greater than 84,950 L (3000 ft^3) at STP, indoor supply locations shall be provided with dedicated mechanical ventilation systems that draw air from within 300 mm (1 ft) of the floor and operate continuously. A means of makeup air shall be provided.

(C) The power supply for mechanical ventilation fans shall conform to the requirements of an essential electrical system as described in Chapter 4 of this document.

(D) Where the total volume of medical gases connected and in storage is less than 84,950 L (3000 ft^3) at STP or the only compressed gas in the room is medical air, natural ventilation shall be permitted to be employed.

(E) Where natural ventilation is permitted, it shall consist of two louvered openings, each having a minimum free area of 46,500 mm^2 (72 $in.^2$), with one located within 300 mm (1 ft) of the floor and one located within 300 mm (1 ft) of the ceiling.

(F) Louvered natural ventilation openings shall not be located in an exit access corridor.

(G) Mechanical ventilation shall be provided if the requirements of 5.1.3.3.3.1(F) cannot be met.

5.1.3.3.3.2 Ventilation for Motor Driven Equipment. The following source locations shall be adequately ventilated to prevent accumulation of heat:

(1) Medical air sources *(See 5.1.3.5.)*
(2) Medical–surgical vacuum sources *(See 5.1.3.6.)*
(3) Waste anesthetic gas disposal (WAGD) sources *(See 5.1.3.7.1.)*
(4) Instrument air sources *(See 5.1.3.8.)*

5.1.3.3.3.3 Ventilation for Outdoor Locations. Outdoor locations surrounded by impermeable walls shall have protected ventilation openings located at the base of each wall to allow free circulation of air within the enclosure. Walls that are shared with other enclosures or with buildings shall be permitted to not have openings.

5.1.3.3.4 Storage.

5.1.3.3.4.1 Full or empty medical gas cylinders, when not connected, shall be stored in locations complying with 5.1.3.3.2 through 5.1.3.3.3 and shall be permitted to be in the same rooms or enclosures as their respective central supply systems.

5.1.3.3.4.2 Cylinders, whether full or empty, shall not be stored in enclosures containing medical air compressor

Copyright National Fire Protection Association
Provided by IHS under license with NFPA
No reproduction or networking permitted without license from IHS
Not for Resale

sources, medical vacuum supply systems, or WAGD supply systems. Only cylinders intended for instrument air reserve headers complying with 5.1.3.8.5 shall be permitted to be stored in enclosures containing instrument air compressors.

5.1.3.4* Central Supply Systems. Central supply systems shall be permitted to consist of the following:

(1) Cylinder manifolds for gas cylinders per 5.1.3.4.10
(2) Manifolds for cryogenic liquid containers per 5.1.3.4.12
(3) Bulk cryogenic liquid systems per 5.1.3.4.13
(4) Medical air compressor systems per 5.1.3.5
(5) Medical–surgical vacuum producers per 5.1.3.6
(6) WAGD producers per 5.1.3.7
(7) Instrument air compressor systems per 5.1.3.8

5.1.3.4.1 Central supply systems shall be obtained from a supplier or manufacturer familiar with their proper construction and use and installed in accordance with the manufacturer's instructions.

5.1.3.4.2* Central supply systems for oxygen, medical air, nitrous oxide, carbon dioxide, and all other patient medical gases shall not be piped to, or used for, any purpose except patient care application. Medical air shall be used only in the application of human respiration, and calibration of medical devices for respiratory application.

5.1.3.4.3 Central supply systems for support gases shall not be piped to, or used for, any purpose except medical support application.

5.1.3.4.4* Materials used in central supply systems shall meet the following requirements:

(1) In those portions of systems intended to handle oxygen at gauge pressures greater than 2070 kPa (300 psi), interconnecting hose shall contain no polymeric materials.
(2) In those portions of systems intended to handle oxygen or nitrous oxide at gauge pressures of less than 2070 kPa (300 psi), material construction shall be compatible with oxygen under the temperatures and pressures to which the components can be exposed in the containment and use of oxygen, nitrous oxide, mixtures of these gases, or mixtures containing more than 23.5 percent oxygen.
(3) If potentially exposed to cryogenic temperatures, materials shall be designed for low temperature service.
(4) If intended for outdoor installation, materials shall be installed per the manufacturer's requirements.

5.1.3.4.5 Final Line Pressure Regulators.

5.1.3.4.5.1 All positive pressure central supply systems shall be provided with duplex final line pressure regulators, installed in parallel with isolation valves before each regulator, and an isolation or check valve after each regulator permitting service to either regulator without interruption of supply.

5.1.3.4.5.2 The line pressure regulators required under 5.1.3.4.5.1 when used for bulk cryogenic liquid systems shall be of a balanced design.

5.1.3.4.5.3 A pressure indicator(s) shall be located downstream (patient or use side) of each regulator or immediately downstream of the isolating valves for the regulators.

5.1.3.4.6 Relief Valves.

5.1.3.4.6.1 All pressure relief valves shall meet the following requirements:

(1) Be of brass, bronze, or stainless steel construction
(2) Be designed for the specific gas service
(3) Have a relief pressure setting not higher than the maximum allowable working pressure (MAWP) of the component with lowest working pressure rating in the portion of the system being protected
(4) Be vented to the outside of the building, except that relief valves for compressed air systems having less than 84,950 L (3000 ft^3) at STP shall be permitted to be diffused locally by means that will not restrict the flow
(5) Have a vent discharge line that is not smaller than the size of the relief valve outlet
(6) Where two or more relief valves discharge into a common vent line, its internal cross-sectional area shall be not less than the aggregate cross-sectional area of all relief valve vent discharge lines served
(7) Shall not discharge into locations creating potential hazards
(8) Have the discharge terminal turned down and screened to prevent the entry of rain, snow, or vermin
(9) Shall be designed in accordance with ASME B31.3, *Pressure Process Piping*

5.1.3.4.6.2 When vented to outdoors, materials and construction for relief valve discharge lines shall be the same as required for positive pressure gas distribution *(see 5.1.10.1)*.

5.1.3.4.6.3 Central supply systems for positive pressure gases shall include one or more relief valves, all meeting the following requirements:

(1) Be located between each final line regulator and the source valve
(2) Have a relief setting that is 50 percent above the normal system operating pressure, as indicated in Table 5.1.11

5.1.3.4.6.4 When vented outside, relief valve vent lines shall be labeled in accordance with 5.1.11.1, in any manner that will distinguish them from the medical gas pipeline.

5.1.3.4.7 Multiple Pressures. Where a single central supply system supplies separate piped distribution networks operating at different pressures, each piped distribution network shall comply with the following:

(1) Medical air compressor systems: 5.1.3.5.9 (pressure regulators) and 5.1.9.2.4(7) (master alarm)
(2) All central supply systems: 5.1.3.4.5 (pressure regulators), 5.1.3.4.6 (relief valves), 5.1.4.4 (source valve), 5.1.9.2.4(7) (master alarm)

5.1.3.4.8 Local Signals.

5.1.3.4.8.1 The following systems shall have local signals located at the source equipment:

(1) Manifolds for gas cylinders without reserve supply *(See 5.1.3.4.10.)*
(2) Manifolds for gas cylinders with reserve supply
(3) Manifolds for cryogenic liquid containers *(See 5.1.3.4.12.)*
(4) Bulk cryogenic liquid systems *(See 5.1.3.4.13.)*
(5) In-building emergency reserves *(See 5.1.3.4.15.)*
(6) Instrument air headers *(See 5.1.3.4.9.)*

5.1.3.4.8.2 The local signals shall meet the following requirements:

(1) Provide visual indication only
(2) Be labeled for the service and condition being monitored
(3) If intended for outdoor installation, be installed per manufacturer's requirements

--`,,```,,,,````-`-`,,`,,`,`,,`---

Copyright National Fire Protection Association
Provided by IHS under license with NFPA
No reproduction or networking permitted without license from IHS
Not for Resale

5.1.3.4.9* Headers. In central supply systems using cylinders containing either gas or liquid, each header shall include the following:

(1) *Cylinder connections in the number required for the header's application
(2) A cylinder lead for each cylinder constructed of materials complying with 5.1.3.4.4 and provided with end fittings permanently attached to the cylinder lead complying with CGA V-1, *Standard for Compressed Gas Cylinder Valve Outlet and Inlet Connections* (ANSI B57.1)
(3) A filter of a material complying with 5.1.3.4.4 to prevent the intrusion of debris into the manifold controls
(4) A header shutoff valve downstream of the nearest cylinder connection, but upstream of the point at which the header connects to the central supply system
(5) A pressure indicator indicating the pressure of header contents
(6) A check valve to prevent backflow into the header and to permit service to the header
(7) If intended for gas cylinder service, a check valve at each connection for the cylinder lead in 5.1.3.4.9(2) to prevent loss of gas in the event of damage to the cylinder lead or operation of an individual cylinder relief valve
(8) If intended for gas cylinder service, a pressure regulator to reduce the cylinder pressure to an intermediate pressure to permit the proper operation of the primary and secondary headers
(9) If intended for service with cryogenic liquid containers, a pressure relief valve
(10) Vent valves, if fitted on a header, shall be vented outside of the building per 5.1.3.4.6.1(5) through 5.1.3.4.6.1(9) and 5.1.3.4.6.2.

5.1.3.4.10* Manifolds for Gas Cylinders without Reserve Supply.

5.1.3.4.10.1 The manifolds in this category shall be located in accordance with 5.1.3.3.1 and the following:

(1) If located outdoors, be installed in an enclosure used only for this purpose and sited to comply with minimum distance requirements in Figure 5.1.3.4.10.1
(2) If located indoors, be installed within a room used only for this purpose

5.1.3.4.10.2 The manifold locations in this category shall be constructed in accordance with 5.1.3.3.2.

5.1.3.4.10.3 The manifold locations in this category shall be ventilated in accordance with 5.1.3.3.3.

5.1.3.4.10.4 The manifolds in this category shall consist of the following:

(1) Two equal headers in accordance with 5.1.3.4.9, each with a sufficient number of gas cylinder connections for an average day's supply, but not fewer than two connections, and with the headers connected to the final line pressure regulator assembly in such a manner that either header may supply the system
(2) Vent valves, if fitted on a header, vented outside of the building per 5.1.3.4.6.1(5) through 5.1.3.4.6.1(9) and 5.1.3.4.6.2
(3) An intermediate relief valve(s), piped to the outside in accordance with 5.1.3.4.6.1(5) through 5.1.3.4.6.1(9), that protects the piping between the header pressure regulator and the line pressure regulator assembly, and protects the line pressure regulators from overpressure in the event of a header regulator failure

5.1.3.4.10.5 The manifolds in this category shall include an automatic means of alternating the two headers to accomplish the following in normal operation:

(1) One header is the primary and the other is the secondary, with either being capable of either role.
(2) When the primary header is supplying the system, the secondary header is prevented from supplying the system.
(3) When the primary header is depleted, the secondary header automatically begins to supply the system.

5.1.3.4.10.6 The manifolds in this category shall actuate a local signal and shall activate an indicator at all master alarm panels when or at a predetermined set point before the secondary header begins to supply the system, indicating changeover has occurred or is about to occur.

5.1.3.4.10.7 If manifolds are located out of doors, they shall be installed per the manufacturer's requirements.

5.1.3.4.11 Manifolds for Gas Cylinders with Reserve Supply. See Figure 5.1.3.4.10.1.

5.1.3.4.11.1 The manifolds in this category shall be located in accordance with 5.1.3.3.1 and the following:

(1) If located outdoors, be installed in an enclosure used only for this purpose and sited to comply with minimum distance requirements in Figure 5.1.3.4.10.1
(2) If located indoors, be installed within a room used only for this purpose

5.1.3.4.11.2 The manifolds in this category shall have their primary and secondary headers located in the same enclosure.

5.1.3.4.11.3 The reserve header shall be permitted to be located in the same enclosure as the primary and secondary headers or in another enclosure compliant with 5.1.3.4.11.1.

5.1.3.4.11.4 The manifold locations in this category shall be constructed in accordance with 5.1.3.3.2.

5.1.3.4.11.5 The manifold locations in this category shall be ventilated in accordance with 5.1.3.3.3.

5.1.3.4.11.6 The manifolds in this category shall consist of the following:

(1) Two equal headers per 5.1.3.4.9 each having sufficient number of gas cylinder connections for an average day's supply, but not fewer than two connections, and with the headers connected to the final line pressure regulator assembly in such a manner that either header may supply the system
(2) A reserve header per 5.1.3.4.9 having sufficient number of gas cylinder connections for an average day's supply, but not fewer than three connections, and connected downstream of the primary/secondary headers and upstream of the final line pressure regulators
(3) An intermediate relief valve(s), piped to the outside in accordance with 5.1.3.4.6.1(5) through 5.1.3.4.6.1(9), that protects the line pressure regulators from overpressure in the event of a header regulator failure

5.1.3.4.11.7 The manifolds in this category shall include an automatic means of controlling the three headers to accomplish the following during normal operation:

(1) One gas cylinder header is the primary and the other is the secondary, with either capable of either role.
(2) When the primary header is supplying the system, the secondary header is prevented from supplying the system.
(3) When the primary header is depleted, the secondary header automatically begins to serve the system.

Copyright National Fire Protection Association
Provided by IHS under license with NFPA
No reproduction or networking permitted without license from IHS
Not for Resale

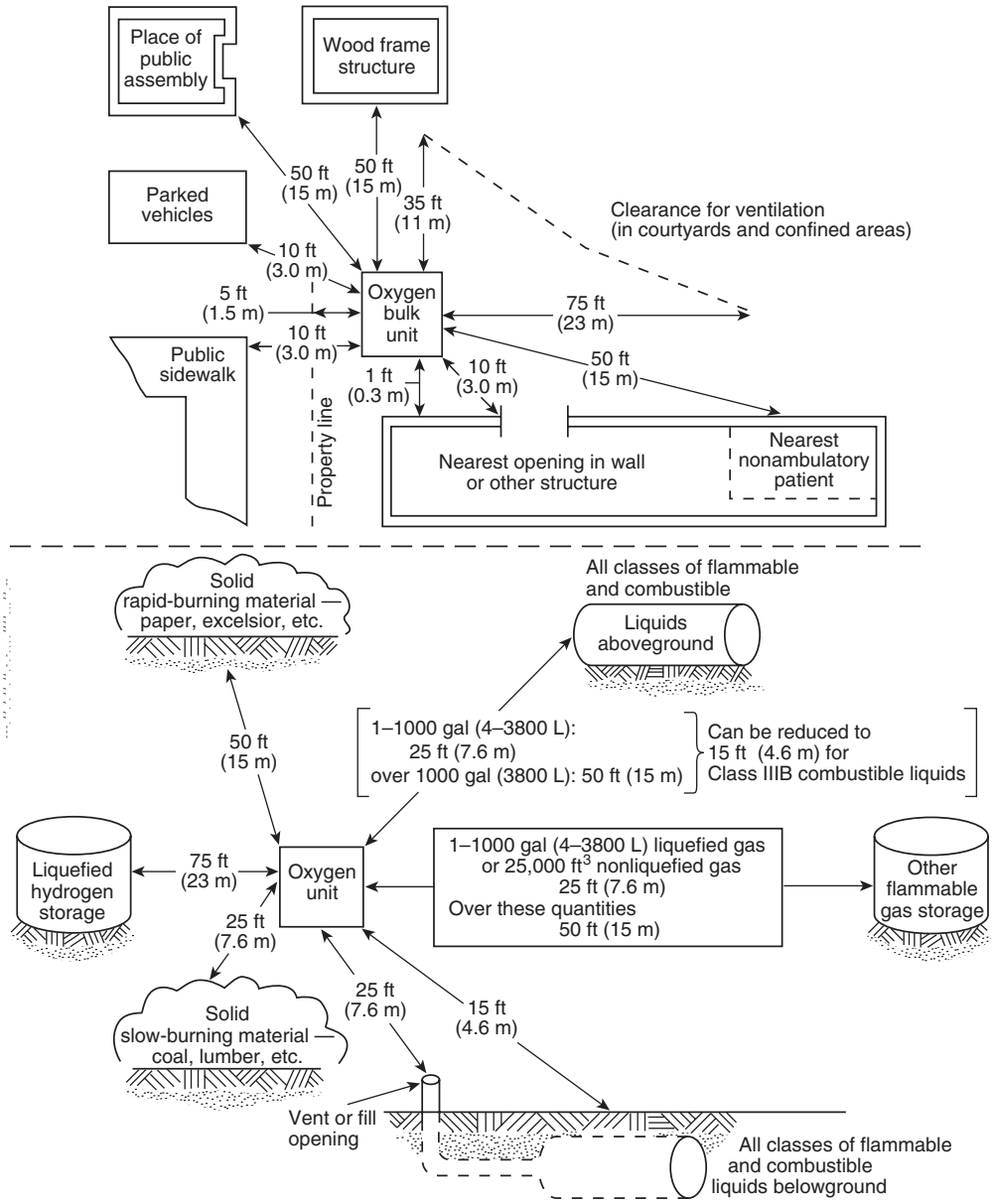

FIGURE 5.1.3.4.10.1 Distance Between Bulk Oxygen Systems and Exposures.

5.1.3.4.11.8 The manifolds in this category shall include a manual or automatic means to place either header into the role as primary header and the other in the role of secondary header.

5.1.3.4.11.9 The manifolds in this category shall include a means to automatically activate the reserve header if for any reason the primary and secondary headers cannot supply the system.

5.1.3.4.11.10 The manifolds in this category shall actuate a local signal and shall activate an indicator at all master alarms under the following conditions:

(1) When or at a predetermined set point before the secondary header begins to supply the system, indicating changeover
(2) When or at a predetermined set point before the reserve header begins to supply the system, indicating reserve is in use
(3) When or at a predetermined set point before the reserve header contents fall to one day's supply, indicating reserve low

5.1.3.4.11.11 If manifolds in this category are located outdoors, they shall be installed per manufacturer's requirements.

5.1.3.4.12* Manifolds for Cryogenic Liquid Containers.

5.1.3.4.12.1 The manifolds in this category shall be located in accordance with 5.1.3.3.1 and the following:

(1) If located outdoors, be installed in an enclosure used only for this purpose and sited to comply with minimum distance requirements in Figure 5.1.3.4.10.1
(2) If located indoors, be installed within a room used only for this purpose

Copyright National Fire Protection Association
Provided by IHS under license with NFPA
No reproduction or networking permitted without license from IHS
Not for Resale

5.1.3.4.12.2 The manifolds in this category shall have their primary and secondary headers located in the same enclosure.

5.1.3.4.12.3 The reserve header shall be permitted to be located in the same enclosure as the primary and secondary headers or in another enclosure compliant with 5.1.3.4.12.1.

5.1.3.4.12.4 The manifolds in this category shall consist of the following:

(1) Two equal headers, per 5.1.3.4.9, each having sufficient number of liquid container connections for an average day's supply, and with the headers connected to the final line pressure regulator assembly in such a manner that either header may supply the system
(2) A reserve header, per 5.1.3.4.9, having sufficient number of gas cylinder connections for an average day's supply, but not fewer than three connections, and connected downstream of the primary/secondary headers and upstream of the final line pressure regulators
(3) A pressure relief installed downstream of the connection of the reserve header and upstream of the final line pressure regulating assembly and set at 50 percent above the nominal inlet pressure

5.1.3.4.12.5 The manifolds in this category shall include an automatic means of controlling the three headers to accomplish the following during normal operation:

(1) If provided with two liquid container headers, one cryogenic liquid header is the primary and the other is the secondary, with either being capable of either role.
(2) If provided with one liquid container header and one gas cylinder header (a hybrid arrangement), the liquid header is the primary and the gas cylinder header is the secondary.
(3) When the primary header is supplying the system, the secondary header is prevented from supplying the system.
(4) When the primary header is depleted, the secondary header automatically begins to supply the system.

5.1.3.4.12.6 The manifolds in this category shall be equipped with a means to conserve the gas produced by evaporation of the cryogenic liquid in the secondary header (when so provided). This mechanism shall discharge the conserved gas into the system upstream of the final line regulator assembly.

5.1.3.4.12.7 The manifolds in this category shall include a manual or automatic means to place either header into the role as primary header and the other in the role of secondary header, except where a liquid/gas hybrid manifold is employed.

5.1.3.4.12.8 The manifolds in this category shall include a means to automatically activate the reserve header if for any reason the primary and secondary headers cannot supply the system.

5.1.3.4.12.9 The manifolds in this category shall actuate a local signal and shall activate an indicator at all master alarms under the following conditions:

(1) When or at a predetermined set point before the secondary header begins to supply the system, indicating changeover
(2) Where a hybrid arrangement is employed, when or at a predetermined set point before the secondary (cylinder) header contents fall to one day's average supply, indicating secondary low
(3) When or at a predetermined set point before the reserve header begins to supply the system, indicating reserve is in use
(4) When or at a predetermined set point before the reserve header contents fall to one day's average supply, indicating reserve low

5.1.3.4.12.10 A variant on the cryogenic liquid container manifold shall be permitted having three headers of cylinders. Such a variant shall comply with all requirements of 5.1.3.4.12, except:

(1) The minimum number of cylinder connections required for each header under 5.1.3.4.12.4(1) shall be two.
(2) Paragraph 5.1.3.4.12.6 shall not apply.

5.1.3.4.13* Bulk Cryogenic Liquid Systems.

5.1.3.4.13.1 Bulk cryogenic liquid systems shall have the following protections:

(1) Oxygen systems compliant with NFPA 50, *Standard for Bulk Oxygen Systems at Consumer Sites*; NFPA 55, *Standard for the Storage, Use, and Handling of Compressed Gases and Cryogenic Fluids in Portable and Stationary Containers, Cylinders, and Tanks*; or Chapter 9, Bulk Oxygen Systems, of NFPA 50, 1996 edition.
(2) Location in an enclosure constructed per 5.1.3.3.2(1) through 5.1.3.3.2(3) and 5.1.3.3.2(5), 5.1.3.3.2(8), and 5.1.3.3.2(9)
(3) Location in an enclosure ventilated per 5.1.3.3.3.3
(4) Location in compliance with CGA M-1, *Guide for Medical Gas Installations at Consumer Sites*
(5) Design such that the items noted in 5.1.3.4.13.2 and items located in trailer unloading area are readily visible to delivery personal during filling operations
(6) Protection against overpressurization of the pressure vessel during filling operations
(7) Installation per 5.1.10.1 through 5.1.10.5.7
(8) Installation by personnel qualified to meet CGA M-1, *Guide for Medical Gas Installations at Consumer Sites*
(9) Installation in compliance with Food and Drug Administration (FDA) Current Good Manufacturing Practices as found in 21 CFR 210 and 21 CFR 211

5.1.3.4.13.2 The following components of the bulk system shall be readily accessible to delivery personnel:

(1) Fill connection
(2) Top and bottom fill valves
(3) Hose purge valve
(4) Vent valve
(5) Full try/cock
(6) Liquid level gauge
(7) Tank pressure gauge

5.1.3.4.13.3 Bulk cryogenic liquid system sites shall include the following:

(1) A poured concrete pad, designed for the weight, dynamic loads, wind loads, and surface loading, and complying with local seismic requirements
(2) Permanent anchors holding the components to the pad in accordance with the design requirements
(3) A complete enclosure as per 5.1.3.3.2(3)
(4) Concrete or crushed stone completely filling the enclosed space.
(5) A vehicle pad for the delivery vehicle that is compliant with NFPA 50, *Standard for Bulk Oxygen Systems at Consumer Sites*, and readily accessible for refilling supply as stated in CGA M-1, *Guide for Medical Gas Installations at Consumer Sites*

Copyright National Fire Protection Association
Provided by IHS under license with NFPA
No reproduction or networking permitted without license from IHS
Not for Resale

(6) Allowance for at least 1 m (3 ft) of clearance around storage container, vaporizer(s), and pressure-regulating manifold for system maintenance and operation

5.1.3.4.13.4 The equipment pad and vehicle pad shall:

(1) Be sloped to provide that all drainage run away from any building, parked vehicles, or combustible materials.
(2) Have no drain located within the pad or closer than 2450 mm (8 ft) from the edge of the pad.

5.1.3.4.13.5 Bulk cryogenic liquid sources shall consist of the following:

(1) One or more main supply vessel(s), whose capacity shall be determined after consideration of the customer usage requirements, delivery schedules, proximity of the facility to alternate supplies, and the emergency plan
(2) A contents gauge on each of the main vessel(s)
(3) A reserve supply sized for greater than an average day's supply, with the appropriate size of vessel or number of cylinders being determined after consideration of delivery schedules, proximity of the facility to alternate supplies, and the facility's emergency plan
(4) At least two main vessel relief valves and rupture discs installed downstream of a three-way (three-port) valve
(5) A check valve located in the primary supply piping upstream of the intersection with a secondary supply or reserve supply

5.1.3.4.13.6 Bulk cryogenic liquid sources shall include a reserve supply, as follows:

(1) A second cryogenic liquid vessel or a cylinder header per 5.1.3.4.9 having sufficient gas cylinder connections for an average day's supply, but not fewer than three
(2) An actuating switch/sensor monitoring internal pressure of the reserve cryogenic liquid vessel (if provided)
(3) A contents gauge monitoring liquid level in the reserve cryogenic liquid vessel (if provided)
(4) A check valve to prevent backflow into the reserve system
(5) A pressure switch monitoring the pressure in the cylinder header (if provided)

5.1.3.4.13.7 Bulk cryogenic liquid sources shall include a fill circuit consisting of the following components:

(1) A nonremovable product-specific fill connection in compliance with CGA V-6, *Standard Cryogenic Liquid Transfer Connection*
(2) A means to cap and secure the fill connection inlet
(3) A minimum 100 mesh strainer of Monel® or brass construction
(4) A check valve to prevent product backflow from the fill inlet
(5) A fill hose purge valve
(6) Supports that hold the fill piping off the ground
(7) A secure connection between the bulk tank and the fill piping
(8) Supports as necessary to hold the fill line in position during all operations associated with the filling procedure

5.1.3.4.13.8 Bulk cryogenic liquid sources shall include automatic means to provide the following functions:

(1) When the main supply is supplying the system, the reserve supply shall be prevented from supplying the system until the main supply is reduced to a level at or below the reserve activation pressure.
(2) When the main supply cannot supply the system, the reserve supply shall automatically begin to supply the system.
(3) Where there is more than one main supply vessel, the system shall operate as described in 5.1.3.4.12 for primary, secondary, and reserve operation.
(4) Where there are two or more cryogenic vessels, they shall be permitted to alternate (e.g., on a timed basis) in the roles of primary, secondary, and reserve, providing an operating cascade (primary–secondary–reserve) as required in 5.1.3.4.12.4 is maintained at all times.
(5) Where a cryogenic vessel is used as the reserve, the reserve vessel shall include a means to conserve the gas produced by evaporation of the cryogenic liquid in the reserve vessel and to discharge the gas into the line upstream of the final line regulator assembly as required by 5.1.3.4.12.6.

5.1.3.4.13.9 The bulk systems shall actuate a local signal and an indicator at all master alarms under the following conditions:

(1) When or at a predetermined set point before the main supply reaches an average day's supply, indicating low contents
(2) When or at a predetermined set point before the reserve supply begins to supply the system, indicating reserve is in use
(3) When or at a predetermined set point before the reserve supply contents fall to one day's average supply, indicating reserve low
(4) If the reserve is a cryogenic vessel, when or at a predetermined set point before the reserve internal pressure falls too low for the reserve to operate properly, indicating reserve failure
(5) Where there is more than one main supply vessel, when or at a predetermined set point before the secondary vessel begins to supply the system, indicating changeover

5.1.3.4.13.10 Where vaporizers are required to convert cryogenic liquid to the gaseous state, the vaporizer units shall conform to the following:

(1) Be permitted to operate by either ambient heat transfer or external thermal source (e.g. electric heater, hot water, steam)
(2) Be designed to provide adequate capacity for the customer's peak and average flowrates under local conditions, seasonal conditions for weather and humidity, and structures that obstruct air circulation flow and sunlight
(3) Have piping and manual/automatic valving configured in such a manner that operating vaporizer(s) or sections of the vaporizer can be switched to nonoperating vaporizer or section of the vaporizer to de-ice through a valving configuration that assures continuous flow to the facility through either or both vaporizers and/or sections of the vaporizer if valving switchover partially hangs up or fails

5.1.3.4.13.11 Where a vaporizer requires an external thermal source, the flow from the source of supply shall be unaffected by the loss of the external thermal source through either of the following:

(1) Reserve ambient heat transfer vaporizers of sufficient capacity for at least one day's average supply and piped so as to be unaffected by flow stoppage through the main vaporizer
(2) A reserve noncryogenic source capable of providing at least one day's average supply

5.1.3.4.14* Emergency Oxygen Supply Connection (EOSC). EOSCs shall be installed to permit connection of a temporary auxiliary source of supply for emergency or maintenance situations under the following conditions:

Copyright National Fire Protection Association
Provided by IHS under license with NFPA
No reproduction or networking permitted without license from IHS
Not for Resale

(1) Where the bulk cryogenic liquid central supply system is outside of and remote from the building that the oxygen supply serves
(2) Where there is not in the building a connected oxygen reserve sufficient for an average day's supply *(See 5.1.3.4.15 for requirements for such reserves.)*
(3) Where multiple freestanding buildings are served from a single oxygen source such that damage to the interconnecting oxygen line could result in one or more buildings losing oxygen supply. In this situation, each building shall be provided with a separate emergency connection.

5.1.3.4.14.1 EOSCs shall be located as follows:

(1) On the exterior of the building being served in a location accessible by emergency supply vehicles at all times in all weather conditions
(2) Connected to the main supply line immediately downstream of the main shutoff valve

5.1.3.4.14.2 EOSCs shall consist of the following:

(1) Physical protection to prevent unauthorized tampering
(2) A female DN (NPS) inlet for connection of the emergency oxygen source that is sized for 100 percent of the system demand at the emergency source gas pressure
(3) A manual shutoff valve to isolate the EOSC when not in use
(4) Two check valves, one downstream of the EOSC and one downstream of the main line shutoff valve, with both upstream from the tee connection for the two pipelines
(5) A relief valve sized to protect the downstream piping system and related equipment from exposure to pressures in excess of 50 percent higher than normal line pressure
(6) Any valves necessary to allow connection of an emergency supply of oxygen and isolation of the piping to the normal source of supply

5.1.3.4.15 In-Building Emergency Reserves.

5.1.3.4.15.1 In-building emergency reserves shall not be used as substitutes for the bulk gas reserves that are required in 5.1.3.4.13.4.

5.1.3.4.15.2 If a reserve is provided inside the building as a substitute for the EOSC, it shall be located in accordance with 5.1.3.3 as follows:

(1) In a room or enclosure constructed per 5.1.3.3.2
(2) In a room or enclosure ventilated per 5.1.3.3.3

5.1.3.4.15.3 In-building emergency reserves shall consist of either of the following:

(1) A gas cylinder header per 5.1.3.4.9 with sufficient cylinder connections to provide for at least an average day's supply
(2) A manifold for gas cylinders complying with 5.1.3.4.10

5.1.3.4.15.4 In-building emergency reserves shall include a check valve in the main line placed on the distribution system side of the ordinary source's main line valve to prevent flow of gas from the emergency reserve to the ordinary source.

5.1.3.4.15.5 In-building emergency reserves shall actuate a local signal and an alarm at all master alarms when or just before it begins to serve the system.

5.1.3.5* Level 1 Medical Air Supply Systems.

5.1.3.5.1* Quality of Medical Air. Medical air shall be required to have the following characteristics:

(1) Be supplied from cylinders, bulk containers, medical air compressor sources, or be reconstituted from oxygen USP and oil-free, dry Nitrogen NF
(2) Meet the requirements of medical air USP
(3) Have no detectable liquid hydrocarbons
(4) Have less than 25 ppm gaseous hydrocarbons
(5) Have equal to or less than 5 mg/m^3 of permanent particulates sized 1 micron or larger in the air at normal atmospheric pressure

5.1.3.5.2* Medical air sources shall be connected to the medical air distribution system only and shall be used only for air in the application of human respiration, and calibration of medical devices for respiratory application.

5.1.3.5.3* Medical Air Compressor Sources.

5.1.3.5.3.1 Medical air compressor systems shall be located per 5.1.3.3 as follows:

(1) Indoors in a dedicated mechanical equipment area, adequately ventilated and with any required utilities (e.g., electricity, drains, lighting, etc.)
(2) In a room constructed per 5.1.3.3.2
(3) In a room ventilated per 5.1.3.3.3.2
(4) For air-cooled equipment, in a room designed to maintain the ambient temperature range as recommended by the manufacturer

5.1.3.5.3.2 Medical air compressor systems shall consist of the following:

(1) Components complying with 5.1.3.5.4 through 5.1.3.5.10, arranged per 5.1.3.5.11
(2) An automatic means to prevent backflow from all on-cycle compressors through all off-cycle compressors
(3) A manual shutoff valve to isolate each compressor from the centrally piped system and from other compressors for maintenance or repair without loss of pressure in the system
(4) Intake filter–muffler(s) of the dry type
(5) Pressure relief valve(s) set at 50 percent above line pressure
(6) Piping and components between the compressor and the source shutoff valve, that do not contribute to contaminant levels
(7) Except as defined in 5.1.3.5.3.2(1) through 5.1.3.5.3.2(6), materials and devices used between the medical air intake and the medical air source valve shall be permitted to be of any design or construction appropriate for the service as determined by the manufacturer.

5.1.3.5.3.3 Medical air compressor systems shall preclude the condensation of water vapor in the piping distribution system by the selection of the air drying equipment.

5.1.3.5.4 Compressors for Medical Air.

5.1.3.5.4.1* Compressors for medical air shall be designed to prevent the introduction of contaminants or liquid into the pipeline by any of the following methods:

(1) Elimination of oil anywhere in the compressor (e.g., liquid ring and permanently sealed bearing compressors)
(2) Reciprocating compressors provided with a separation of the oil-containing section from the compression chamber by at least two seals creating an area open to atmosphere that allows the following:
    (a) Direct and unobstructed visual inspection of the interconnecting shaft through vent and inspection openings no smaller than 1.5 shaft diameters in size

Copyright National Fire Protection Association
Provided by IHS under license with NFPA
No reproduction or networking permitted without license from IHS
Not for Resale

(b) The facility operators to confirm proper seal operation by direct visual inspection through the above-shaft opening, without disassembly of the compressor (e.g., extended head compressors with an atmospheric vent between the compression chamber and the crankcase)

(3) Rotating element compressors provided with a compression chamber free of oil that provides the following:

(a) Separation of each oil-containing section from the compression chamber by at least one seal having atmospheric vents on each side with the vent closest to the oil-containing section supplied with a gravity drain to atmosphere

(b) Unobstructed visualization of the atmospheric vent(s), closest to each oil-containing section, that is accessible for inspection without disassembling the compressor

(c) Entry of the rotating shaft into each compression chamber at a point that is above atmospheric pressure

(d) The facility operators to confirm proper seal operation by direct visual inspection of the atmospheric vents

5.1.3.5.4.2 For liquid ring compressors, service water and seal water of a quality recommended by the compressor manufacturer shall be used.

5.1.3.5.4.3 Compressors shall be constructed of materials deemed suitable by the manufacturer.

5.1.3.5.4.4 Anti-vibration mountings shall be installed for compressors as required by equipment dynamics or location and in accordance with the manufacturer's recommendations.

5.1.3.5.4.5 Flexible connectors shall connect the air compressors with their intake and outlet piping.

5.1.3.5.5 Aftercoolers. Aftercoolers, where required, shall be provided with individual condensate traps. The receiver shall not be used as an aftercooler or aftercooler trap.

5.1.3.5.5.1 Aftercoolers shall be constructed of materials deemed suitable by the manufacturer.

5.1.3.5.5.2 Anti-vibration mountings shall be installed for aftercoolers as required by equipment dynamics or location and in accordance with the manufacturer's recommendations.

5.1.3.5.6 Medical Air Receivers. Receivers for medical air shall meet the following requirements:

(1) Be made of corrosion-resistant materials or otherwise be made corrosion-resistant
(2) Comply with Section VIII, Unfired Pressure Vessels, of the ASME *Boiler and Pressure Vessel Code*
(3) Be equipped with a pressure relief valve, automatic drain, manual drain, sight glass, and pressure indicator
(4) Be of a capacity sufficient to prevent the compressors from short-cycling

5.1.3.5.7 Medical Air Dryers. Medical air dryers shall meet the following requirements:

(1) Be designed to provide air at a maximum dew point that is below the frost point [0°C (32°F)] at any level of demand
(2) Be sized for 100 percent of the system peak calculated demand at design conditions
(3) Be constructed of materials deemed suitable by the manufacturer
(4) Be provided with anti-vibration mountings installed as required by equipment dynamics or location and in accordance with the manufacturer's recommendations

5.1.3.5.8 Medical Air Filters. Medical air filters shall meet the following requirements:

(1) Be appropriate for the intake air conditions
(2) Be located upstream (source side) of the final line regulators
(3) Be sized for 100 percent of the system peak calculated demand at design conditions and be rated for a minimum of 98 percent efficiency at 1 micron or greater
(4) Be equipped with a continuous visual indicator showing the status of the filter element life
(5) Be constructed of materials deemed suitable by the manufacturer

5.1.3.5.8.1 Compressors complying with 5.1.3.5.4.1(2) and 5.1.3.5.4.1(3) shall be provided with the following:

(1) Coalescing filters with element change indicators
(2) Charcoal absorbers with colorimetric hydrocarbon indicators

5.1.3.5.9 Medical Air Regulators. Medical air regulators shall meet the following requirements:

(1) Be sized for 100 percent of the system peak calculated demand at design condition
(2) Be constructed of materials deemed suitable by the manufacturer
(3) Be equipped with a pressure indicator indicating delivery pressure

5.1.3.5.10* Medical Air Local Alarm. A local alarm complying with 5.1.9.5 shall be provided for the medical air compressor source.

5.1.3.5.11 Piping Arrangement and Redundancies.

5.1.3.5.11.1 Component arrangement shall be as follows:

(1) Components shall be arranged to permit service and a continuous supply of medical air in the event of a single fault failure.
(2) Component arrangement shall be permitted to vary as required by the technology(ies) employed, provided an equal level of operating redundancy and medical air quality is maintained.

5.1.3.5.11.2 Medical air compressors shall be sufficient to serve the peak calculated demand with the largest single compressor out of service. In no case shall there be fewer than 2 (two) compressors.

5.1.3.5.11.3 When aftercoolers are provided, they shall be either one of the following:

(1) Arranged as a duplex or multiplex set, sized to serve the peak calculated demand with the largest single aftercooler out of service and provided with valves adequate to isolate any single aftercooler from the system without shutting down supply of medical air
(2) Arranged one per compressor, sized to handle the output of that compressor, and valved as appropriate to permit repair or replacement with that compressor out of service but without shutting down supply of medical air

5.1.3.5.11.4* Medical air receiver(s) shall be provided with proper valves to allow the flow of compressed air to enter and exit out of separate receiver ports during normal operation and allow the receiver to be bypassed during service without shutting down the supply of medical air.

Copyright National Fire Protection Association
Provided by IHS under license with NFPA
No reproduction or networking permitted without license from IHS
Not for Resale

5.1.3.5.11.5 Dryers, filters, and regulators shall be at least duplexed with each component sized to serve the peak calculated demand with the largest of each component out of service.

5.1.3.5.11.6* Dryers, filters, and regulators shall be provided with manual valves upstream and manual valves or check valves downstream to allow service to the components without shutting down the system in either one of the following ways:

(1) Be installed for each component, upstream and downstream of each component, allowing each to be individually isolated
(2) Be installed upstream (source side) and downstream of components in series so as to create redundant parallel branches of components

5.1.3.5.11.7 A three-way valve (three-port), indexed to flow, full port shall be permitted to be used to isolate one branch or component for the purposes of 5.1.3.5.11.3, 5.1.3.5.11.4, 5.1.3.5.11.5, and 5.1.3.5.11.6.

5.1.3.5.11.8 Under normal operation, only one aftercooler shall be open to airflow with the other aftercooler valved off.

5.1.3.5.11.9 Under normal operation, only one dryer–filter(s)–regulator sequence shall be open to airflow with the other sequence valved off.

5.1.3.5.11.10 If the relief valve required in 5.1.3.5.3.2(5) and 5.1.3.5.6(3) can be isolated from the system by the valve arrangement used to comply with 5.1.3.5.11.6, then redundant relief valve(s) shall be installed in the parallel sequence.

5.1.3.5.11.11 A DN8 (NPS ¼) valved sample port shall be provided downstream of the final line pressure regulators, dew point monitor, and carbon monoxide monitor and upstream of the source shutoff valve to allow for sampling of the medical air.

5.1.3.5.11.12 Medical air source systems shall be provided with a source valve per 5.1.4.4.

5.1.3.5.11.13 Where medical air piping systems at different operating pressures are required, the piping shall separate after the filters, but shall be provided with separate line regulators, dew point monitors, relief valves, and source shutoff valves.

5.1.3.5.12 Electrical Power and Control.

5.1.3.5.12.1 Additional compressor(s) shall automatically activate when the compressor(s) in operation is incapable of maintaining the required pressure.

5.1.3.5.12.2 Automatic or manual alternation of compressors shall allow division of operating time. If automatic alternation of compressors is not provided, the facility staff shall arrange a schedule for manual alternation.

5.1.3.5.12.3 Each compressor motor shall be provided with electrical components including, but not limited to, the following:

(1) A dedicated disconnect switch installed in the electrical circuit ahead of each motor starter
(2) Motor starting device
(3) Overload protection
(4) Where compressor systems having two or more compressors employ a control transformer or other voltage control power device, at least two such devices shall be installed
(5) Control circuits arranged in such a manner that the shutdown of one compressor does not interrupt the operation of another compressor
(6) Automatic restart function such that compressor(s) will restart after power interruption without manual intervention

5.1.3.5.12.4 Electrical installation and wiring shall conform to the requirements of NFPA 70, *National Electrical Code*.

5.1.3.5.12.5 Emergency electrical service for the compressors shall conform to the requirements of the essential electrical system as described in Chapter 4 of this document.

5.1.3.5.13 Compressor Intake.

5.1.3.5.13.1 The medical air compressors shall draw their air from a source of clean air located where no contamination is anticipated from engine exhausts, fuel storage vents, medical–surgical vacuum system discharges, particulate matter, or odor of any type.

5.1.3.5.13.2 The compressor air intake shall be located outdoors above roof level, at a minimum distance of 3.05 m (10 ft) from any door, window, exhaust, other intake, or opening in the building and a minimum distance of 6.1 m (20 ft) above the ground.

5.1.3.5.13.3 If an air source equal to or better than outside air (e.g., air already filtered for use in operating room ventilating systems) is available, it shall be permitted to be used for the medical air compressors with the following provisions:

(1) This alternate source of supply air shall be available on a continuous 24-hour-per-day, 7-day-per-week basis.
(2) Ventilating systems having fans with motors or drive belts located in the air stream shall not be used as a source of medical air intake.

5.1.3.5.13.4 Compressor intake piping shall be hard-drawn seamless copper, and one of the following:

(1) ASTM B 819, *Standard Specification for Seamless Copper Tube for Medical Gas Systems*, medical gas tube
(2) ASTM B 88, *Standard Specification for Seamless Copper Water Tube*, water tube (Type K or L)
(3) ASTM B 280, *Standard Specification for Seamless Copper Tubing for Air Conditioning and Refrigeration Field Service*, 280 ACR tube

5.1.3.5.13.5 Air intakes for separate compressors shall be permitted to be joined together to one common intake where the following conditions are met:

(1) The common intake is sized to minimize back pressure in accordance with the manufacturer's recommendations.
(2) Each compressor can be isolated by manual or check valve, blind flange, or tube cap to prevent open inlet piping when compressor(s) are removed for service and consequent backflow of room air into the other compressor(s).

5.1.3.5.13.6 The end of the intake shall be turned down and screened or otherwise be protected against the entry of vermin, debris, or precipitation by screening, fabricated or composed of a noncorroding material.

5.1.3.5.14 Operating Alarms and Local Signals. Medical air systems shall be monitored for conditions that may affect air quality during use or in the event of failure, based on the type of compressor(s) used in the system.

5.1.3.5.14.1 Where liquid ring air compressors, compressors having water-cooled heads, or water-cooled aftercoolers are used, air receivers shall be equipped with a high water level sensor that shuts down the compressor system and activates a local alarm indicator. *[See 5.1.9.5.4(7).]*

Copyright National Fire Protection Association
Provided by IHS under license with NFPA
No reproduction or networking permitted without license from IHS
Not for Resale

5.1.3.5.14.2 Where liquid ring compressors are used, each compressor shall have a liquid level sensor in each air–water separator, which, when the liquid level is above the design level, shuts down its compressor and activates a local alarm indicator. *[See 5.1.9.5.4(8).]*

5.1.3.5.14.3 Where nonliquid ring compressors compliant with 5.1.3.5.4.1(1) are used, the air temperature at the immediate outlet of each compressor cylinder shall be monitored by a high-temperature sensor that shuts down that compressor and activates a local alarm indicator. *[See 5.1.9.5.4(9).]* The temperature setting shall be as recommended by the compressor manufacturer.

5.1.3.5.14.4 Where compressors compliant with 5.1.3.5.4.1(2) and 5.1.3.5.4.1(3) are used, the following requirements shall apply:

(1) The air temperature at the immediate outlet of each compressor chamber shall be monitored by a high-temperature sensor that shuts down that compressor and activates a local alarm indicator. *[See 5.1.9.5.4(9).]* The temperature setting shall be as recommended by the compressor manufacturer.
(2) Coalescing filters with element change indicator shall be provided.
(3) Charcoal filters with colorimetric hydrocarbon indicator shall be provided.
(4) Liquid hydrocarbons shall be monitored on a continuous basis by pigment indicator or other type of instrument permanently installed downstream of each compressor and shall be inspected and documented daily.
(5) Gaseous hydrocarbons shall be monitored on a quarterly basis.

5.1.3.5.14.5 When the backup or lag compressor is running, a local alarm shall activate. *[See 5.1.9.5.4(1).]* This signal shall be manually reset.

5.1.3.5.15 Medical Air Quality Monitoring. Medical air quality shall be monitored downstream of the medical air regulators and upstream of the piping system as follows:

(1) Dew point shall be monitored and shall activate a local alarm and all master alarms when the dew point at system pressure exceeds +4°C (+39°F).
(2) Carbon monoxide shall be monitored and shall activate a local alarm when the CO level exceeds 10 ppm. *[See 5.1.9.5.4(2).]*
(3) Dew point and carbon monoxide monitors shall activate the individual monitor's signal at all master alarm panels if the monitor loses power.

5.1.3.6* Medical–Surgical Vacuum Supply Systems.

5.1.3.6.1 Medical–Surgical Vacuum Sources.

5.1.3.6.1.1 Medical–surgical vacuum sources shall be located per 5.1.3.3 as follows:

(1) Indoors in a dedicated mechanical equipment area, adequately ventilated and with any required utilities
(2) In a room constructed per 5.1.3.3.2
(3) In a room ventilated per 5.1.3.3.3.2
(4) For air-cooled equipment, in a room designed to maintain the ambient temperature range as recommended by the equipment manufacturer

5.1.3.6.1.2 Medical–surgical vacuum sources shall consist of the following:

(1) Two or more vacuum pumps sufficient to serve the peak calculated demand with the largest single vacuum pump out of service
(2) An automatic means to prevent backflow from any on-cycle vacuum pumps through any off-cycle vacuum pumps
(3) A shutoff valve or other isolation means to isolate each vacuum pump from the centrally piped system and other vacuum pumps for maintenance or repair without loss of vacuum in the system
(4) A vacuum receiver
(5) Piping between the vacuum pump(s), discharge(s), receiver(s), and the vacuum source shutoff valve shall be in accordance with 5.1.10.2 except that stainless, galvanized, or black steel pipe shall be permitted to be used.
(6) Except as defined in 5.1.3.6.1.2(1) through 5.1.3.6.1.2(5), materials and devices used between the medical vacuum exhaust and the medical vacuum source shall be permitted to be of any design or construction appropriate for the service as determined by the manufacturer.

5.1.3.6.2 Vacuum Pumps.

5.1.3.6.2.1 Vacuum pumps shall be constructed of materials deemed suitable by the manufacturer.

5.1.3.6.2.2 Anti-vibration mountings shall be installed for vacuum pumps as required by equipment dynamics or location and in accordance with the manufacturer's recommendations.

5.1.3.6.2.3 Flexible connectors shall connect the vacuum pumps with their intake and outlet piping.

5.1.3.6.2.4 For liquid ring vacuum pumps, seal water shall be of a quality recommended by the vacuum pump manufacturer.

5.1.3.6.3 Vacuum Receivers. Receivers for vacuum shall meet the following requirements:

(1) Be made of ferrous and/or nonferrous materials
(2) Comply with Section VIII, Unfired Pressure Vessels, of the ASME *Boiler and Pressure Vessel Code*
(3) Be capable of withstanding a gauge pressure of 415 kPa (60 psi) and 760 mm (29.9 in.) gauge HgV
(4) Be equipped with a manual drain
(5) Be of a capacity based on the technology of the pumps

5.1.3.6.4 Vacuum Local Alarm. A local alarm complying with 5.1.9.5 shall be provided for the vacuum source.

5.1.3.6.5 Piping Arrangement and Redundancies.

5.1.3.6.5.1 Piping arrangement shall be as follows:

(1) Piping shall be arranged to permit service and a continuous supply of medical–surgical vacuum in the event of a single fault failure.
(2) Piping arrangement shall be permitted to vary based on the technology(ies) employed, provided an equal level of operating redundancy is maintained.
(3) Where only one set of vacuum pumps is available for a combined medical–surgical vacuum system and an analysis, research, or teaching laboratory vacuum system, such laboratories shall be connected separate from the medical–surgical system directly to the receiver tank through its own isolation valve and fluid trap located at the receiver. Between the isolation valve and fluid trap, a scrubber shall be permitted to be installed.

5.1.3.6.5.2 The medical–surgical vacuum receiver(s) shall be serviceable without shutting down the medical–surgical vacuum system by any of the following methods:

Copyright National Fire Protection Association
Provided by IHS under license with NFPA
No reproduction or networking permitted without license from IHS
Not for Resale

(1) By providing an isolation valve where the receiver is tee'd into the main line
(2) By piping the receiver at the end of a valved isolation line
(3) By providing a three-valve bypass

5.1.3.6.5.3 Medical–surgical vacuum source systems shall be provided with a source shutoff valve per 5.1.4.4.

5.1.3.6.6 Electrical Power and Control.

5.1.3.6.6.1 Additional pumps shall automatically activate when the pump(s) in operation is incapable of adequately maintaining the required vacuum.

5.1.3.6.6.2 Automatic or manual alternation of pumps shall allow division of operating time. If automatic alternation of pumps is not provided, the facility staff shall arrange a schedule for manual alternation.

5.1.3.6.6.3 Each pump motor shall be provided with electrical components including, but not limited to, the following:

(1) A dedicated disconnect switch installed in the electrical circuit ahead of each motor starter
(2) Motor starting device
(3) Overload protection
(4) Where pump systems having two or more pumps employ a control transformer or other voltage control power device, at least two such devices are required
(5) Control circuits arranged in such a manner that the shutdown of one pump does not interrupt the operation of another pump
(6) Automatic restart function such that pump(s) will restart after power interruption without manual intervention

5.1.3.6.6.4 Electrical installation and wiring shall conform to the requirements of NFPA 70, *National Electrical Code*.

5.1.3.6.6.5 Emergency electrical service for the pumps shall conform to the requirements of the essential electrical system as described in Chapter 4 of this document.

5.1.3.6.7 Medical–Surgical Vacuum Source Exhaust.

5.1.3.6.7.1 The medical–surgical vacuum pumps shall exhaust in a manner and location that will minimize the hazards of noise and contamination to the facility and its environment.

5.1.3.6.7.2 The exhaust shall be located as follows:

(1) Outdoors
(2) At least 3.05 m (10 ft) from any door, window, air intake, or other openings in buildings
(3) At a level different from air intakes
(4) Where prevailing winds, adjacent buildings, topography, or other influences that would not divert the exhaust into occupied areas or prevent dispersion of the exhaust

5.1.3.6.7.3 The end of the exhaust shall be turned down and screened or otherwise be protected against the entry of vermin, debris, or precipitation by screening fabricated or composed of a noncorroding material.

5.1.3.6.7.4 The exhaust shall be piped of materials approved for medical–surgical vacuum piping under 5.1.10.2.

5.1.3.6.7.5 The exhaust shall be free of dips and loops that might trap condensate or oil. Where such low points are unavoidable, a drip leg and valved drain shall be installed.

5.1.3.6.7.6 Vacuum exhausts from multiple pumps shall be permitted to be joined together to one common exhaust where the following conditions are met:

(1) The common exhaust is sized to minimize back pressure in accordance with the pump manufacturer's recommendations.
(2) Each pump can be isolated by manual or check valve, blind flange, or tube cap to prevent open exhaust piping when pump(s) is removed for service and consequent flow of exhaust air into the room.

5.1.3.6.8 Operating Alarms. Medical–surgical vacuum systems shall activate a local alarm when the backup or lag pump is running per 5.1.9.5. This signal shall be manually reset.

5.1.3.7* Waste Anesthetic Gas Disposal (WAGD).

5.1.3.7.1* Sources. WAGD sources shall be chosen in consultation with the medical staff having knowledge of the requirements to determine the type of system, number and placement of terminals, and other required safety and operating devices.

5.1.3.7.1.1 WAGD shall be permitted to be produced by a dedicated producer, through the medical–surgical vacuum source or by venturi.

5.1.3.7.1.2 If WAGD is produced by the medical–surgical vacuum source, the following shall apply:

(1) The medical–surgical vacuum source shall comply with 5.1.3.6.
(2) Flammable anesthetics or other flammable vapors shall be diluted below the lower flammable limit prior to disposal into the medical–surgical vacuum system or the vacuum pumps shall comply with 5.1.3.7.2.1(2).
(3) The medical–surgical vacuum source shall be sized to accommodate the additional volume.

5.1.3.7.1.3 If WAGD is produced by a dedicated WAGD producer with a total power greater than 1 horsepower in total (both producers), the following shall apply:

(1) The WAGD source shall be located in accordance with 5.1.3.3.
(2) The WAGD source shall be indoors in a dedicated mechanical equipment area with any required utilities.
(3) The WAGD source shall be in a room constructed per 5.1.3.3.2.
(4) The WAGD source shall be ventilated per 5.1.3.3.3.2.
(5) For air-cooled equipment, the WAGD source shall be located to maintain the ambient temperature range as recommended by the manufacturer.
(6) The WAGD producers shall comply with 5.1.3.7.2.

5.1.3.7.1.4 If WAGD is produced by a dedicated WAGD producer with a total power less than 1 horsepower in total (both producers), the following shall be permitted to apply:

(1) The WAGD source shall be permitted to be located near the inlet(s) served.
(2) For air-cooled equipment, the WAGD source shall be located to maintain the ambient temperature range as recommended by the manufacturer.

5.1.3.7.1.5 For liquid ring pumps in WAGD service, seal water shall be of a quality as recommended by the pump manufacturer.

5.1.3.7.1.6 The WAGD source shall consist of the following:

(1) Two or more WAGD producers sufficient to serve the peak calculated demand with the largest single WAGD producer out of service
(2) An automatic means to prevent backflow from any on-cycle WAGD producers through any off-cycle WAGD producers

Copyright National Fire Protection Association
Provided by IHS under license with NFPA
No reproduction or networking permitted without license from IHS
Not for Resale

(3) A shutoff valve to isolate each WAGD producer from the centrally piped system and other WAGD producers for maintenance or repair without loss of medical–surgical vacuum in the system
(4) Piping between the WAGD producers and the source shutoff valve compliant with 5.1.10.2, except that stainless steel shall be permitted to be used as a piping material
(5) Anti-vibration mountings shall be installed for WAGD producers as required by equipment dynamics or location and in accordance with the manufacturer's recommendations
(6) Flexible connectors interconnecting the producers with their intake and outlet piping as required by equipment dynamics or location, in accordance with the WAGD producer manufacturer's recommendations

5.1.3.7.1.7 If WAGD is produced by a venturi, the following shall apply:

(1) The venturi shall not be user-adjustable (i.e., shall require the use of special tools).
(2) The venturi shall be driven using water, inert gas, instrument air, or other dedicated air source.
(3) Medical air shall not be used to power the venturi.

5.1.3.7.2 WAGD Producers.

5.1.3.7.2.1 Vacuum pumps used for WAGD service shall be as follows:

(1) Compliant with 5.1.3.6.2
(2) Designed of materials and using lubricants and sealants that are inert in the presence of oxygen, nitrous oxide, and halogenated anesthetics

5.1.3.7.2.2 Vacuum producers (e.g., fans or blowers) designed for operation at vacuums below 130 mm (5 in.) HgV shall be as follows:

(1) Permitted to be made of any materials determined by the manufacturer as suitable for the service
(2) Provided with anti-vibration mountings as required by equipment dynamics or location and in accordance with the manufacturer's recommendation
(3) Connected with their intake and outlet piping through flexible connections
(4) Used only for WAGD service and not employed for other services
(5) Interconnected via piping, ductwork, and so on made of materials determined by the manufacturer as suitable to the service

5.1.3.7.3 If WAGD is joined to vacuum piping, it shall be connected a minimum distance of 1.5 m (5 ft) from any vacuum inlet.

5.1.3.7.4 WAGD Alarms. When the WAGD system is served by a central source(s), a local alarm complying with 5.1.9.5 shall be provided for the WAGD source.

5.1.3.7.4.1 A WAGD source system shall activate a local alarm when the backup or lag producer is running.

5.1.3.7.5 Electrical Power and Control.

5.1.3.7.5.1 Additional producers shall automatically activate when the producer(s) in operation is incapable of maintaining the required vacuum.

5.1.3.7.5.2 Automatic or manual alternation of producers shall allow division of operating time. If automatic alternation of producers is not provided, the facility staff shall arrange a schedule for manual alternation.

5.1.3.7.5.3 Each producer motor shall be provided with electrical components including, but not limited to, the following:

(1) A dedicated disconnect switch installed in the electrical circuit ahead of each motor starter
(2) Motor starting device
(3) Overload protection
(4) Where WAGD systems having two or more producers employ a control transformer or other voltage control power device, at least two such devices
(5) Control circuits arranged in such a manner that the shutdown of one producer does not interrupt the operation of another producer
(6) Automatic restart function such that pump(s) will restart after power interruption without manual intervention

5.1.3.7.5.4 Electrical installation and wiring shall conform to the requirements of NFPA 70, *National Electrical Code*.

5.1.3.7.5.5 Emergency electrical service for the producers shall conform to the requirements of the essential electrical system as described in Chapter 4 of this document.

5.1.3.7.6 WAGD Exhaust. The WAGD pumps shall exhaust in compliance with 5.1.3.6.7.

5.1.3.8* Instrument Air Supply Systems.

5.1.3.8.1 The quality of instrument air shall be as follows:

(1) Compliant with Instrument Air section in ANSI/ISA S-7.0.01, *Quality Standard for Instrument Air*
(2) Filtered to 0.01 micron
(3) Free of liquids (e.g., water, hydrocarbons, solvents, etc.)
(4) Free of hydrocarbon vapors
(5) Dry to a dew point of –40°C (–40°F)

5.1.3.8.2 General.

5.1.3.8.2.1 Instrument air shall be permitted to be used for any medical support purpose (e.g., to operate tools, air driven booms, pendants, or similar applications) and (if appropriate to the procedures) to be used in laboratories.

5.1.3.8.2.2 Instrument air supply systems shall be located per 5.1.3.3 as follows:

(1) Indoors, in a dedicated mechanical equipment area, adequately ventilated and with any required utilities
(2) In a room constructed per 5.1.3.3.2
(3) In a room ventilated per 5.1.3.3.3.2
(4) For air-cooled equipment, in a room designed to maintain the ambient temperature range as recommended by the equipment manufacturer

5.1.3.8.2.3 Instrument air systems shall be prohibited from the following:

(1) Interconnection with medical air systems
(2) Usage for any purpose where the air will be intentionally respired by patients or staff

5.1.3.8.3 Instrument Air Source.

5.1.3.8.3.1 Instrument air sources shall produce air at not less than a gauge pressure of 1380 kPa (200 psi) output pressure.

5.1.3.8.3.2 Instrument air sources shall provide air meeting the definition of Instrument Air in Chapter 3.

Copyright National Fire Protection Association
Provided by IHS under license with NFPA
No reproduction or networking permitted without license from IHS
Not for Resale

5.1.3.8.3.3 Instrument air sources shall be permitted to include at least two compressors or one compressor and a standby header complying with 5.1.3.4.8.

5.1.3.8.3.4 Instrument air sources shall comply with 5.1.3.5.3 with exceptions as specified in 5.1.3.8.

5.1.3.8.4 Instrument Air Compressors. Instrument air compressors shall be permitted to be of any type capable of not less than a gauge pressure of 1380 kPa (200 psi) output pressure and of providing air meeting the definition of Instrument Air in Chapter 3.

5.1.3.8.5* Instrument Air Standby Headers.

5.1.3.8.5.1 Where instrument air systems are provided with a standby header, the header shall meet the following requirements:

(1) Comply with 5.1.3.4.9, except that the number of attached cylinders shall be sufficient for one hour normal operation
(2) Use connectors as for medical air in CGA V-1, *Standard for Compressed Gas Cylinder Valve Outlet and Inlet Connections* (ANSI B57.1)
(3) Enter the system upstream (source side) of the final line filters *(See Figure A.5.1.3.8.)*
(4) Automatically serve the system in the event of a failure of the compressor

5.1.3.8.6 Intake Air. Intake air for instrument air compressors shall be permitted to be drawn from the equipment location.

5.1.3.8.7 Instrument Air Filters.

5.1.3.8.7.1 Instrument air sources shall be filtered with activated carbon filters that meet the following requirements:

(1) Be located upstream (source side) of the final line filters
(2) Be sized for 100 percent of the system peak calculated demand at design conditions
(3) Be constructed of materials deemed suitable by the manufacturer

5.1.3.8.7.2 Final line filters shall meet the following requirements:

(1) Be located upstream (source side) of the final line regulators and downstream of the carbon filters
(2) Be sized for 100 percent of the system peak calculated demand at design conditions
(3) Be rated for a minimum of 98 percent efficiency at 0.01 micron
(4) Be equipped with a continuous visual indicator showing the status of the filter element life
(5) Be constructed of materials deemed suitable by the manufacturer

5.1.3.8.7.3 Filters combining the function of 5.1.3.8.7.1 and 5.1.3.8.7.2 shall be permitted to be used.

5.1.3.8.8 Instrument Air Accessories. Accessories used for instrument air sources shall comply with the following subparagraphs:

(1) 5.1.3.5.5 for aftercoolers
(2) 5.1.3.5.6 for air receivers
(3) 5.1.3.5.7 for air dryers
(4) 5.1.3.5.9 for air regulators

5.1.3.8.9 Instrument Air Piping Arrangement and Redundancies. Instrument air sources shall comply with 5.1.3.5.11 except for the following:

(1) Systems employing a standby header shall be permitted to have simplex aftercoolers and dryers.
(2) Systems employing a standby header shall not require a three-valve receiver bypass.
(3) Standby headers, where provided, shall be isolated from the compressor by a check valve to prevent backflow through the compressor.

5.1.3.8.10 Instrument Air Monitoring and Alarms.

5.1.3.8.10.1 Instrument air sources shall include the following alarms:

(1) A local alarm that activates when or just before the backup compressor (if provided) activates, indicating that the lag compressor is in operation. This signal shall be manually reset.
(2) A local alarm and alarms at all master alarm panels that activate when the dew point at system pressure exceeds –30°C (–22°F), indicating high dew point.

5.1.3.8.10.2 For sources with standby headers, the following additional conditions shall activate a local alarm at the compressor site, a local signal at the header location, and alarms at all master alarm panels:

(1) An alarm that activates when or just before the reserve begins to supply the system, indicating reserve in use
(2) An alarm that activates when or just before the reserve falls below an average hour's supply, indicating reserve low

5.1.3.8.11 Electrical Power and Control.

5.1.3.8.11.1 When multiple compressors are used, additional compressor(s) shall automatically activate when the compressor(s) in operation is incapable of maintaining the required pressure.

5.1.3.8.11.2 When multiple compressors are used, automatic or manual alternation of compressors shall allow division of operating time. If automatic alternation of compressors is not provided, the facility staff shall arrange a schedule for manual alternation.

5.1.3.8.11.3 Each compressor motor shall be provided with electrical components including, but not limited to, the following:

(1) A dedicated disconnect switch installed in the electrical circuit ahead of each motor starter
(2) Motor starting device
(3) Overload protection
(4) Where compressor systems having two or more compressors employ a control transformer or other voltage control power device, at least two such devices shall be installed
(5) Control circuits arranged in such a manner that the shutdown of one compressor does not interrupt the operation of another compressor
(6) Automatic restart function such that compressor(s) will restart after power interruption without manual intervention

5.1.3.8.11.4 Electrical installation and wiring shall conform to the requirements of NFPA 70, *National Electrical Code*.

5.1.3.8.11.5 Emergency electrical service for the compressors shall conform to the requirements of the essential electrical system as described in Chapter 4 of this document.

Copyright National Fire Protection Association
Provided by IHS under license with NFPA
No reproduction or networking permitted without license from IHS
Not for Resale

5.1.4* Valves.

5.1.4.1 Gas and Vacuum Shutoff Valves. Shutoff valves shall be provided to isolate sections or portions of the piped distribution system for maintenance, repair, or planned future expansion need, and to facilitate periodic testing.

5.1.4.2 Accessibility. All valves except valves in zone valve box assemblies shall be located in secured areas such as locked piped chases, or be locked or latched in their operating position, and be labeled as to gas supplied and the area(s) controlled.

5.1.4.2.1 Shutoff valves accessible to other than authorized personnel shall be installed in valve boxes with frangible or removable windows large enough to permit manual operation of valves.

5.1.4.2.2 Shutoff valves for use in certain areas, such as psychiatric or pediatric, shall be permitted to be secured with the approval of the authority having jurisdiction to prevent inappropriate access.

5.1.4.2.3 Valves for nonflammable medical gases shall not be installed in the same zone valve box assembly with flammable gases.

5.1.4.3 Valve Types. New or replacement shutoff valves shall be as follows:

(1) Quarter turn, full ported, ball type
(2) Brass or bronze construction
(3) Have extensions for brazing
(4) Have a handle indicating open or closed
(5) Consist of three-pieces permitting inline serviceability

5.1.4.3.1 Valves for positive pressure gases shall be cleaned for oxygen service by the manufacturer.

5.1.4.3.2 Valves for vacuum or WAGD service shall be permitted to be ball or butterfly type and shall not be required to be cleaned for oxygen service.

5.1.4.4 Source Valve. A shutoff valve shall be placed at the immediate connection of each source system to the piped distribution system to permit the entire source, including all accessory devices (e.g., air dryers, final line regulators, etc.), to be isolated from the facility.

5.1.4.4.1 The source valve shall be located in the immediate vicinity of the source equipment.

5.1.4.4.2 The source valve shall be labeled in accordance with 5.1.11.2.

5.1.4.5* Main Line Valve. A shutoff valve shall be provided in the main supply line inside of the building, except where one or more of the following conditions exist:

(1) The source and source valve are located inside the building served.
(2) The source system is physically mounted to the wall of the building served and the pipeline enters the building in the immediate vicinity of the source valve.

5.1.4.5.1 The main line valve shall be located to permit access by authorized personnel only (i.e., by locating above a ceiling or behind a locked access door).

5.1.4.5.2 The main line valve shall be located on the facility side of the source valve and outside of the source room, enclosure, or where the main line first enters the building.

5.1.4.5.3 The main line valve shall be labeled in accordance with 5.1.11.2.

5.1.4.6 Riser Valve. Each riser supplied from the main line shall be provided with a shutoff valve in the riser adjacent to the main line.

5.1.4.6.1 Riser valves shall be permitted to be located above ceilings, but shall remain accessible and not be obstructed.

5.1.4.6.2 The riser valve shall be labeled in accordance with 5.1.11.2.

5.1.4.7 Service Valves. Service valves shall be installed to allow servicing or modification of lateral branch piping from a main or riser without shutting down the entire main, riser, or facility.

5.1.4.7.1 Only one service valve shall be required for each branch off of a riser regardless of how many zone valve boxes are installed on that lateral.

5.1.4.7.2 Service valves shall be placed in the branch piping prior to any zone valve box assembly on that branch.

5.1.4.7.3 Service valves shall be located according to any one of the following:

(1) Behind a locked access door
(2) Locked open above a ceiling
(3) Locked open in a secure area

5.1.4.7.4 Service valves shall be labeled in accordance with 5.1.11.2.

5.1.4.7.5 Sensors for area alarm panels as required in 5.1.9.3.4 shall be permitted to be placed in any relationship to service valves (if installed).

5.1.4.8 Zone Valve. All station outlets/inlets shall be supplied through a zone valve as follows:

(1) The zone valve shall be placed such that a wall intervenes between the valve and outlets/inlets that it controls.
(2) The zone valve shall serve only outlets/inlets located on that same story.

5.1.4.8.1 Zone valves shall be readily operable from a standing position in the corridor on the same floor they serve.

5.1.4.8.2 Zone valves shall be so arranged that shutting off the supply of medical gas or vacuum to one zone will not affect the supply of medical gas or vacuum to another zone or the rest of the system.

5.1.4.8.3 A pressure/vacuum indicator shall be provided on the station outlet/inlet side of each zone valve.

5.1.4.8.4 Zone valve boxes shall be installed where they are visible and accessible at all times.

5.1.4.8.5 Zone valve boxes shall not be installed behind normally open or normally closed doors, or otherwise hidden from plain view.

5.1.4.8.6 Zone valve boxes shall not be located in closed or locked rooms, areas, or closets.

5.1.4.8.7 A zone valve shall be located immediately outside each vital life-support, critical care, and anesthetizing location in each medical gas and/or vacuum line, and located so as to be readily accessible in an emergency.

5.1.4.8.7.1 All gas-delivery columns, hose reels, ceiling tracks, control panels, pendants, booms, or other special installations shall be located downstream of the zone valve.

Copyright National Fire Protection Association
Provided by IHS under license with NFPA
No reproduction or networking permitted without license from IHS
Not for Resale

5.1.4.8.7.2 Zone valves shall be so arranged that shutting off the supply of gas to any one operating room or anesthetizing location will not affect the others.

5.1.4.8.8 Zone valves shall be labeled in accordance with 5.1.11.2.

5.1.4.9 In-Line Valves. Optional in-line valves shall be permitted to be installed to isolate or shut off piping for servicing of individual rooms or areas.

5.1.4.9.1 In-line shutoff valves intended for use to isolate piping for maintenance or modification shall meet the following requirements:

(1) Be located in a restricted area
(2) Be locked or latched open
(3) Be identified in accordance with 5.1.11.2

5.1.4.9.2 Sensors for area alarm panels as required in 5.1.9.3.4 shall be permitted to be placed in any relationship to in-line valves (if installed).

5.1.4.10 Valves for Future Connections. Shutoff valves provided for the connection of future piping shall meet the following requirements:

(1) Be located in a restricted area
(2) Be locked or latched closed
(3) Be identified in accordance with 5.1.11.2

5.1.4.10.1 Future connection valves shall be labeled as to gas content.

5.1.4.10.2 Downstream piping shall be closed with a brazed cap with tubing allowance for cutting and rebrazing.

5.1.5* Station Outlet/Inlets.

5.1.5.1 Each station outlet/inlet for medical gases or vacuum shall be gas-specific, whether the outlet/inlet is threaded, or is a noninterchangeable quick-coupler.

5.1.5.2 Each station outlet shall consist of a primary and a secondary valve (or assembly).

5.1.5.3 Each station inlet shall consist of a primary valve (or assembly) and shall be permitted to include a secondary valve (or assembly).

5.1.5.4 The secondary valve (or assembly) shall close automatically to stop the flow of gas (or vacuum, if provided) when the primary valve (or assembly) is removed.

5.1.5.5 Each outlet/inlet shall be legibly identified in accordance with 5.1.11.3.

5.1.5.6 Threaded outlets/inlets shall be non-interchangeable connections complying with CGA V-5, *Diameter-Index Safety System (Noninterchangeable Low Pressure Connections for Medical Gas Applications).*

5.1.5.7 Each station outlet/inlet, including those mounted in columns, hose reels, ceiling tracks, or other special installations, shall be designed so that parts or components that are required to be gas-specific for compliance with 5.1.5.1 and 5.1.5.9 cannot be interchanged between station outlet/inlet for different gases.

5.1.5.8 The use of common parts in outlets/inlets, such as springs, O-rings, fasteners, seals, and shutoff poppets, shall be permitted.

5.1.5.9 Components of a vacuum station inlet necessary for the maintenance of vacuum specificity shall be legibly marked to identify them as components or parts of a vacuum or suction system.

5.1.5.10 Components of inlets not specific to vacuum shall not be required to be marked.

5.1.5.11 Factory-installed copper inlet tubes on station outlets extending no further than 205 mm (8 in.) from the body of the terminal shall be not less than DN8 (NPS ¼) (⅜ in. O.D.) size, with 8 mm (0.3 in.) minimum inside diameter.

5.1.5.12 Factory-installed copper inlet tubes on station inlets extending no further than 205 mm (8 in.) from the body of the terminal shall be not less than DN10 (NPS ⅜) (½ in. O.D.) size, with 10 mm (0.4 in.) minimum inside diameter.

5.1.5.13 Station outlets/inlets shall be permitted to be recessed or otherwise protected from damage.

5.1.5.14 When multiple wall outlets/inlets are installed, they shall be spaced to permit the simultaneous use of adjacent outlets/inlets with any of the various types of therapy equipment.

5.1.5.15 Station outlets in systems having non-standard operating pressures shall meet the following additional requirements:

(1) Be gas-specific
(2) Be pressure-specific where a single gas is piped at more than one operating pressure [e.g., a station outlet for oxygen, 550 kPa (80 psi) shall not accept an adapter for oxygen, 345 kPa (50 psi)]
(3) If operated at a pressure in excess of 550 kPa (80 psi), be either D.I.S.S. connectors or comply with 5.1.5.15(4)
(4) If operated at a gauge pressure between 1380 kPa (200 psi) and 2070 kPa (300 psi), the station outlet shall be so designed as to prevent the removal of the adapter until the pressure has been relieved, to prevent the adapter injuring the user or others when removed from the outlet.

5.1.5.16 WAGD networks shall provide a WAGD inlet in all locations where nitrous oxide or halogenated anesthetic gas is intended to be administered.

5.1.5.16.1 Station inlets for WAGD service shall have the following additional characteristics:

(1) They shall not be interchangeable with any other systems, including medical–surgical vacuum.
(2) Components necessary for the maintenance of WAGD specificity shall be legibly marked to identify them as components of a WAGD inlet.
(3) They shall be of a type appropriate for the flow and vacuum level required by the facility's gas anesthetic machines.
(4) They shall be located to avoid physical damage to the inlet.

The text of 5.1.5.16 has been revised by a tentative interim amendment (TIA). See page 1.

5.1.6* Manufactured Assemblies.

5.1.6.1 Manufactured assemblies shall be pre-tested by the manufacturer prior to arrival at the installation site as follows:

(1) Initial blowdown test per 5.1.12.2.2
(2) Initial pressure test per 5.1.12.2.3
(3) Piping purge test per 5.1.12.2.5
(4) Standing pressure test per 5.1.12.2.6 or 5.1.12.2.7, except as permitted under 5.1.6.2

Copyright National Fire Protection Association
Provided by IHS under license with NFPA
No reproduction or networking permitted without license from IHS
Not for Resale

5.1.6.2 The standing pressure test under 5.1.6.1(4) shall be permitted to be performed by any testing method that will assure a pressure decay of less than 1 percent in 24 hours.

5.1.6.3 The manufacturer of the assembly shall provide documentation certifying the performance and successful completion of the tests required in 5.1.6.1.

5.1.6.4 Manufactured assemblies employing flexible hose shall use hose and flexible connectors with a minimum burst gauge pressure of 6895 kPa (1000 psi).

5.1.6.5 Manufactured assemblies shall have a flame spread rating of not greater than 200 when tested in accordance with NFPA 255, *Standard Method of Test of Surface Burning Characteristics of Building Materials*.

5.1.6.6 Manufactured assemblies employing flexible hose or tubing shall be attached to the pipelines using station outlets /inlets.

5.1.6.7 Manufactured assemblies employing hose or flexible connectors, where the station outlet/inlet attached to the piping is not fully and immediately accessible (i.e., cannot be manipulated without the removal of panels, doors, etc.), shall have station outlets/inlets with the following additional characteristics:

(1) Be D.I.S.S. connectors
(2) In pressure gases, be permitted to omit the secondary valve (or assembly) required in 5.1.5.2
(3) In vacuum and WAGD, be permitted to omit both primary and secondary valves (or assemblies) for minimum restriction to flow
(4) Be provided with a second terminal at which the user connects and disconnects complying with 5.1.5

5.1.6.8 Manufactured assemblies connected to the pipeline by brazing shall have station outlets/inlets that comply with 5.1.5 in all respects.

5.1.6.9 The installation of manufactured assemblies shall be tested in accordance with 5.1.12.

5.1.7* Surface-Mounted Medical Gas Rails (MGR).

5.1.7.1 MGR assemblies shall be permitted to be installed where multiple uses of medical gases and vacuum at a single patient location are required or anticipated.

5.1.7.2 MGR assemblies shall be entirely visible in the room, not passing into or through walls, partitions, and so forth.

5.1.7.3 MGR assemblies shall be made of materials with a melting point at least 538°C (1000°F).

5.1.7.4 MGR assemblies shall be cleaned per 5.1.10.1.1.

5.1.7.5 Station outlets or inlets shall not be placed on the ends of MGR assemblies.

5.1.7.6 Openings for station outlets/inlets in the MGR shall be gas-specific.

5.1.7.7 Openings in the MGR not occupied by station outlets/inlets (e.g., for future use) shall be capped or plugged so that a special tool is required for removal (i.e., cannot be removed by a wrench, pliers, screwdriver, or other common tools).

5.1.7.8 MGR assemblies shall connect to the pipeline through fittings that are brazed to the pipeline.

5.1.7.9* Where the pipeline and the MGR assembly are of dissimilar metals, the connections shall be plated or otherwise protected from interaction between the metals.

5.1.7.10 The installation of the MGR shall be tested in accordance with 5.1.12 and 5.1.13.

5.1.8 Pressure and Vacuum Indicators.

5.1.8.1 General.

5.1.8.1.1 Pressure indicators and manometers for medical gas piping systems shall be cleaned for oxygen service.

5.1.8.1.2 Gauges shall comply with ANSI/ASME B40.100, *Pressure Gauges and Gauge Attachments*.

5.1.8.1.3 The scale range of positive pressure analog indicators shall be such that the normal reading falls within the middle 50 percent of the scale.

5.1.8.1.4 The scale range of digital indicators shall be not more than two times the working pressure of the piping system.

5.1.8.1.5 The scale range of vacuum indicators shall be 0 mm to 760 mm (0 in. to 29.9 in.) gauge HgV, except that indicators with a normal range display shall indicate normal only above 300 mm (12 in.) gauge HgV.

5.1.8.1.6 Indicators adjacent to master alarm actuators and area alarms shall be labeled to identify the name of or chemical symbol for the particular piping system that they monitor.

5.1.8.1.7 The rated accuracy of indicators used for testing shall be 1 percent (full scale) or better at the point of reading.

5.1.8.2 Locations.

5.1.8.2.1 Pressure and vacuum indicators shall be readable from a standing position.

5.1.8.2.2 Pressure/vacuum indicators shall be provided at the following locations, as a minimum:

(1) Adjacent to the alarm-initiating device for source main line pressure and vacuum alarms in the master alarm system
(2) At or in area alarm panels to indicate the pressure/vacuum at the alarm activating device for each system that is monitored by the panel
(3) On the station outlet/inlet side of zone valves

5.1.8.2.3 All pressure-sensing devices and mainline pressure gauges downstream of the source valves shall be provided with a gas-specific demand check fitting to facilitate service testing or replacement.

5.1.8.2.3.1 Gas-specific demand check fittings shall not be required on zone valve pressure indicators.

5.1.8.2.4 Demand check fittings shall be provided for all monitors.

5.1.9* Level 1 Warning Systems.

5.1.9.1 General. All master, area, and local alarm systems used for medical gas and vacuum systems shall include the following:

(1) Separate visual indicators for each condition monitored, except as permitted in 5.1.9.5.2 for local alarms that are displayed on master alarm panels
(2) Visual indicators that remain in alarm until the situation that has caused the alarm is resolved
(3) A cancelable audible indication of each alarm condition that produces a sound with a minimum level of 80 dBA at .92 m (3 ft)
(4) A means to visually indicate a lamp or LED failure
(5) Visual and audible indication that the wiring to an alarm initiating device is disconnected

Copyright National Fire Protection Association
Provided by IHS under license with NFPA
No reproduction or networking permitted without license from IHS
Not for Resale

(6) Labeling of each indicator, indicating the condition monitored
(7) Labeling of each alarm panel for its area of surveillance
(8) Re-initiation of the audible signal if another alarm condition occurs while the audible alarm is silenced
(9) Power for master and area alarms from the life safety branch of the emergency electrical system as described in Chapter 4, Electrical Systems
(10) Power for local alarms, dew point sensors, and carbon monoxide sensors permitted to be from the same essential electrical branch as is used to power the air compressor system
(11) Wiring from switches or sensors that is supervised or protected as required by Section 517.30(C)(3) of NFPA 70, *National Electrical Code*, for emergency system circuits
(12) Assurance by the responsible authority of the facility that the labeling of alarms, where room numbers or designations are used, is accurate and up-to-date
(13) Provisions for automatic restart after a power loss of 10 seconds (e.g., during generator startup) without giving false signals or requiring manual reset

5.1.9.2* Master Alarms. A master alarm system shall be provided to monitor the operation and condition of the source of supply, the reserve source (if any), and the pressure in the main lines of each medical gas and vacuum piping system.

5.1.9.2.1 The master alarm system shall consist of two or more alarm panels located in at least two separate locations, as follows:

(1) One master alarm panel shall be located in the office or work space of the on-site individual responsible for the maintenance of the medical gas and vacuum piping systems.
(2) In order to assure continuous surveillance of the medical gas and vacuum systems while the facility is in operation, the second master alarm panel shall be located in an area of continuous observation (e.g., the telephone switchboard, security office, or other continuously staffed location).

5.1.9.2.2 A centralized computer system shall be permitted to be substituted for one of the master alarms required in 5.1.9.2.1, if the computer system complies with 5.1.9.5.

5.1.9.2.3 The master alarm panels required in 5.1.9.2.1 shall connect directly to the alarm initiating devices that they monitor.

5.1.9.2.3.1 Master alarm signals shall not be relayed from one master alarm panel to another.

5.1.9.2.3.2 Where multi-pole alarm relays are used to isolate the alarm initiating signals to master alarm panels, the control power source for the relays shall be independent of any of the master alarm panels.

5.1.9.2.3.3 Multiple master alarms shall be permitted to monitor a single initiating device.

5.1.9.2.4 Master alarm panels for medical gas and vacuum systems shall each include the following signals:

(1) An alarm indication when, or just before, changeover occurs in a medical gas system that is supplied by a manifold or other alternating-type bulk system that has as a part of its normal operation a changeover from one portion of the operating supply to another
(2) An alarm indication for a bulk cryogenic liquid system when the main supply reaches an average day's supply, indicating low contents
(3) An alarm indication when, or just before, the changeover to the reserve supply occurs in a medical gas system that consists of one or more units that continuously supply the piping system while another unit remains as the reserve supply and operates only in the case of an emergency
(4) An alarm indication for cylinder reserve pressure low when the content of a cylinder reserve header is reduced below one average day's supply
(5) For bulk cryogenic liquid systems, an alarm when or at a predetermined set point before the reserve supply contents fall to one day's average supply, indicating reserve low
(6) Where a cryogenic liquid storage unit is used as a reserve for a bulk supply system, an alarm indication when the gas pressure available in the reserve unit is below that required for the medical gas system to function
(7) An alarm indication when the pressure in the main line of each separate medical gas system increases 20 percent or decreases 20 percent from the normal operating pressure
(8) An alarm indication when the medical–surgical vacuum pressure in the main line of each vacuum system drops to or below 300 mm (12 in.) gauge HgV
(9) An alarm indication(s) from the local alarm panel(s) as described in 5.1.9.5.2 to indicate when one or more of the conditions being monitored at a site is in alarm
(10) A medical air dew point high alarm from each compressor site to indicate when the line pressure dew point is greater than +2°C (+35°F)
(11) A WAGD low alarm when the WAGD vacuum level or flow is below effective operating limits
(12) An instrument air dew point high alarm from each compressor site to indicate when the line pressure dew point is greater than –30°C (–22°F)

5.1.9.2.5 The alarm indications required in 5.1.9.2.4(7) and 5.1.9.2.4(8) shall originate from sensors installed in the main lines immediately downstream (on the patient or use side) of the source valves. Where it is necessary to install a main line valve in addition to a source valve *(see 5.1.4.5)*, the sensors shall be located downstream (on the patient or use side) of the main valve.

5.1.9.3* Area Alarms. Area alarm panels shall be provided to monitor all medical gas, medical–surgical vacuum, and piped WAGD systems supplying anesthetizing locations, and other vital life support and critical areas (e.g., post anesthesia recovery, intensive care units, emergency departments, etc.).

5.1.9.3.1 Area alarms shall be located at a nurse's station or other similar location that will provide for surveillance.

5.1.9.3.2 Area alarm panels for medical gas systems shall indicate if the pressure in the lines in the area being monitored increases or decreases by 20 percent from the normal line pressure.

5.1.9.3.3 Area alarm panels for medical–surgical vacuum systems shall indicate if the vacuum in the area drops to or below 300 mm (12 in.) gauge HgV.

5.1.9.3.4 Sensors for area alarms shall be located as follows:

(1)*Vital life support and critical areas shall have the alarm sensors installed on the patient or use side of any of the individual zone valve box assemblies.
(2)*Areas for anesthetizing gas delivery shall have the sensors installed either on the source side of any of the individual room zone valve box assemblies or on the patient or use side of each of the individual zone valve assemblies.

Copyright National Fire Protection Association
Provided by IHS under license with NFPA
No reproduction or networking permitted without license from IHS
Not for Resale

(3) The placement of the sensors shall not be affected by valves located in areas accessible to authorized personnel only, such as service valves *(see 5.1.4.7)* or in-line valves *(see 5.1.4.9)*.

5.1.9.4 Computer systems used as substitute master alarms as required by 5.1.9.2.1(2) shall have the mechanical and electrical characteristics described in 5.1.9.4.1 and the programming characteristics described in 5.1.9.4.2.

5.1.9.4.1 Computer systems used to substitute for alarms shall have the following mechanical and electrical characteristics:

(1) The computer system shall be in continuous uninterrupted operation and provided with power supplies as needed to ensure such reliability.
(2) The computer system shall be continuously attended by responsible individuals or shall provide remote signaling of responsible parties (e.g., through pagers, telephone autodialers, or other such means).
(3) Where computer systems rely on signal interface devices (e.g., electronic interfaces, other alarm panels, 4-20 mA cards, etc.), such interfaces shall be supervised such that failure of the device(s) shall initiate (an) alarm(s).
(4) If the computer system does not power the signaling switches/sensors from the same power supply required in 5.1.9.4.1(1), the power supply for the signaling switches/sensors shall be powered from the life safety branch of the emergency electrical system as described in Chapter 4, Electrical Systems.
(5) Computer systems shall be permitted to connect directly to the sensors/switches in 5.1.9.2.3 in the same manner as an alarm panel if operation of other alarm panel(s) is not impaired.
(6) Wiring from the computer system to the signaling switches or sensors shall comply with 5.1.9.1(11).
(7) Computer systems shall be provided with an audio alert per 5.1.9.1(3) except the audio alert shall be permitted to be only as loud as needed to alert the system operator.
(8) The facility shall assure compliance with 5.1.9.1(12)

5.1.9.4.2 The operating program(s) for computer systems used to substitute for alarms shall include the following:

(1) Medical gas alarms shall be allocated the priority of a life safety signal.
(2) A medical gas alarm signal shall interrupt any other activity of a lesser priority to run the alarm algorithm(s).
(3) The alarm algorithm shall include activation of an audible alert, activation of any remote signaling protocol, and display of the specific condition in alarm.
(4) The alarm algorithm shall provide for compliance with 5.1.9.1(1), 5.1.9.1(2), 5.1.9.1(3), 5.1.9.1(5), 5.1.9.1(6), and 5.1.9.1(8).

5.1.9.5* Local Alarms. Local alarms shall be installed to monitor the function of the air compressor system(s), medical–surgical vacuum pump system(s), WAGD systems, and instrument air systems.

5.1.9.5.1 The signals referenced in 5.1.9.5.4 shall be permitted to be located as follows:

(1) On or in the control panel(s) for the machinery being monitored
(2) Within a monitoring device (e.g., dew point monitor or carbon monoxide monitor)
(3) On a separate alarm panel(s)

5.1.9.5.2 The master alarm shall include at least one signal from the source equipment to indicate a problem with the source equipment at this location. This master alarm signal shall activate when any of the required local alarm signals for this source equipment activates.

5.1.9.5.3 If there is more than one medical air compressor system, instrument air compressor system, WAGD system, and/or more than one medical–surgical vacuum pump system at different locations in the facility, or if the compressors and/or vacuum sources are in different locations in the facility, then it shall be necessary for each location to have separate alarms at the master panels.

5.1.9.5.4 The following functions shall be monitored at each local alarm site:

(1) Backup or lag compressor in operation to indicate when the primary or lead air compressor is incapable of satisfying the demand of the requirements of the system, except when the medical air system consists of three or more compressors, then the backup or lag signal shall be permitted to energize when the last compressor has been signaled to start.
(2) High carbon monoxide level to indicate when the carbon monoxide level in the medical air system is 10 ppm or higher.
(3) Medical air dew point high to indicate when the line pressure dew point is greater than +4°C (+39°F).
(4) Backup or lag vacuum pump in operation to indicate when the primary or lead vacuum pump is incapable of satisfying the demand of the requirements of the system, except when the vacuum pump system consists of three or more pumps, then the backup or lag signal shall be permitted to energize when the last pump has been signaled to start.
(5) When a central dedicated WAGD producer is provided per 5.1.3.7.1.3, WAGD lag in use. The signal shall be manually reset.
(6) Instrument air dew point high to indicate when the line pressure dew point is greater than –30°C (–22°F).
(7) For compressor systems using liquid ring compressors or compressors with water-cooled components, high water in the receiver tank to indicate when the water level in the receiver tank has reached a level determined to be detrimental to the operation of the system.
(8) For compressor systems using liquid ring compressors, high water in the separators.
(9) For compressor systems using other than liquid ring compressors, high discharge air temperature.

5.1.10 Level 1 Distribution.

5.1.10.1 Piping Materials for Field-Installed Positive Pressure Medical Gas Systems.

5.1.10.1.1 Tubes, valves, fittings, station outlets, and other piping components in medical gas systems shall have been cleaned for oxygen service by the manufacturer prior to installation in accordance with CGA G-4.1, *Cleaning Equipment for Oxygen Service*, except that fittings shall be permitted to be cleaned by a supplier or agency other than the manufacturer.

5.1.10.1.2 Each length of tube shall be delivered plugged or capped by the manufacturer and kept sealed until prepared for installation.

5.1.10.1.3 Fittings, valves, and other components shall be delivered sealed, labeled, and kept sealed until prepared for installation.

Copyright National Fire Protection Association
Provided by IHS under license with NFPA
No reproduction or networking permitted without license from IHS
Not for Resale

5.1.10.1.4* Tubes shall be hard-drawn seamless copper ASTM B 819, *Standard Specification for Seamless Copper Tube for Medical Gas Systems*, medical gas tube, Type L, except that where operating pressures are above a gauge pressure of 1275 kPa (185 psi) Type K shall be used for sizes larger than DN80 (NPS 3) (3⅛ in. O.D.).

5.1.10.1.5 ASTM B 819, *Standard Specification for Seamless Copper Tube for Medical Gas Systems*, medical gas tube shall be identified by the manufacturer's markings "OXY," "MED," "OXY/MED," "OXY/ACR," or "ACR/MED" in blue (Type L) or green (Type K).

5.1.10.1.6 The installer shall furnish documentation certifying that all installed piping materials comply with the requirements of 5.1.10.1.1.

5.1.10.2 Piping Materials for Field-Installed Medical–Surgical Vacuum and WAGD Systems.

5.1.10.2.1 Piping for vacuum systems shall be constructed of any of the following:

(1) Hard-drawn seamless copper tube:
   (a) ASTM B 88, *Standard Specification for Seamless Copper Water Tube*, copper tube (Types K, L, M)
   (b) ASTM B 280, *Standard Specification for Seamless Copper Tubing for Air Conditioning and Refrigeration Field Service*, copper ACR tube
   (c) ASTM B 819, *Standard Specification for Seamless Copper Tube for Medical Gas Systems*, copper medical gas tubing (Type K or L)
(2) Stainless steel tube

5.1.10.2.2 Vacuum Tubing Marking.

5.1.10.2.2.1 If copper vacuum tubing is installed along with any medical gas tubing, the vacuum tubing shall, prior to installation, be prominently labeled or otherwise identified to preclude using materials or installation procedures in the medical gas system that are not suitable for oxygen service.

5.1.10.2.2.2 If medical gas tube (ASTM B 819, *Standard Specification for Seamless Copper Tube for Medical Gas Systems*) is used for vacuum piping, such special marking shall not be required, provided that the vacuum piping installation meets all other requirements for medical gas piping, including the prohibition of flux on copper-to-copper joints and the use of a nitrogen purge while brazing.

5.1.10.2.3 WAGD systems shall be piped as follows:

(1) Using materials compliant with 5.1.10.2.1 or 5.1.10.2.2
(2) In systems operated under 130 mm (5 in.) HgV maximum vacuum only, using any noncorroding tube or ductwork

5.1.10.3 Fittings.

5.1.10.3.1* Turns, offsets, and other changes in direction in welded or brazed medical gas and vacuum piping shall be made with wrought copper capillary fittings complying with ASME B16.22, *Wrought Copper and Copper Alloy Solder-Joint Pressure Fittings*, or brazed fittings complying with ASME B16.50, *Wrought Copper and Copper Alloy Braze-Joint Pressure Fittings*.

5.1.10.3.2 Cast copper alloy fittings shall not be permitted.

5.1.10.3.3 Branch connections in vacuum piping systems shall be permitted to be made using mechanically formed, drilled, and extruded tee-branch connections that are formed in accordance with the tool manufacturer's instructions, and brazed.

5.1.10.4 Threaded Joints. Threaded joints in medical gas and vacuum distribution piping shall meet the following requirements:

(1) Be limited to connections to pressure/vacuum indicators, alarm devices, check valves, and source equipment
(2) Be tapered pipe threads complying with ASME B1.20.1, *Pipe Threads, General Purpose, Inch*
(3) Be made up with polytetrafluoroethylene (such as Teflon™) tape or other thread sealant recommended for oxygen service, with the sealant applied to the male threads only

5.1.10.5 Brazed Joints.

5.1.10.5.1 General Requirements.

5.1.10.5.1.1 Brazed joints shall be made using a brazing alloy that exhibits a melting temperature in excess of 538°C (1000°F) to retain the integrity of the piping system in the event of fire exposure.

5.1.10.5.1.2 Brazed tube joints shall be the socket type.

5.1.10.5.1.3 Filler metals shall bond with and be metallurgically compatible with the base metals being joined.

5.1.10.5.1.4 Filler metals shall comply with ANSI/AWS A5.8, *Specification for Filler Metals for Brazing and Braze Welding*.

5.1.10.5.1.5 Copper-to-copper joints shall be brazed using a copper–phosphorus or copper–phosphorus–silver brazing filler metal (BCuP series) without flux.

5.1.10.5.1.6 Brazing performed between bulk cryogenic liquid vessels and their vaporizers (i.e., subject to cryogenic exposure) shall be permitted to be brazed using BAg brazing alloy with flux by a brazer qualified to CGA M-1, *Guide for Medical Gas Installations at Consumer Sites*.

5.1.10.5.1.7 Joints to be brazed in place shall be accessible for necessary preparation, assembly, heating, filler application, cooling, cleaning, and inspection.

5.1.10.5.1.8 Braze joints shall be continuously purged with Nitrogen NF.

5.1.10.5.2 Cutting Tube Ends.

5.1.10.5.2.1 Tube ends shall be cut square using a sharp tubing cutter to avoid deforming the tube.

5.1.10.5.2.2 The cutting wheels on tubing cutters shall be free from grease, oil, or other lubricant not suitable for oxygen service.

5.1.10.5.2.3 The cut ends of the tube shall be deburred with a sharp, clean deburring tool, taking care to prevent chips from entering the tube.

5.1.10.5.3 Cleaning Joints for Brazing.

5.1.10.5.3.1 The interior surfaces of tubes, fittings, and other components that are cleaned for oxygen service shall be stored and handled to avoid contamination prior to assembly and brazing.

5.1.10.5.3.2 The exterior surfaces of tube ends shall be cleaned prior to brazing to remove any surface oxides.

5.1.10.5.3.3 When cleaning the exterior surfaces of tube ends, no matter shall be permitted to enter the tube.

5.1.10.5.3.4 If the interior surfaces of fitting sockets become contaminated prior to brazing, they shall be recleaned for

Copyright National Fire Protection Association
Provided by IHS under license with NFPA
No reproduction or networking permitted without license from IHS
Not for Resale

oxygen in accordance with 5.1.10.5.3.10 and be cleaned for brazing with a clean, oil-free wire brush.

5.1.10.5.3.5 Clean, nonshedding, abrasive pads shall be used to clean the exterior surfaces of the tube ends.

5.1.10.5.3.6 The use of steel wool or sand cloth shall be prohibited.

5.1.10.5.3.7 The cleaning process shall not result in grooving of the surfaces to be joined.

5.1.10.5.3.8 After being abraded, the surfaces shall be wiped using a clean, lint-free white cloth.

5.1.10.5.3.9 Tubes, fittings, valves, and other components shall be visually examined internally before being joined to verify that they have not become contaminated for oxygen service and that they are free of obstructions or debris.

5.1.10.5.3.10 The interior surfaces of tube ends, fittings, and other components that were cleaned for oxygen service by the manufacturer, but became contaminated prior to being installed, shall be permitted to be recleaned on-site by the installer by thoroughly scrubbing the interior surfaces with a clean, hot water–alkaline solution, such as sodium carbonate or trisodium phosphate 450 g to 11 L (1 lb to 3 gal) of potable water and thoroughly rinsing them with clean, hot, potable water.

5.1.10.5.3.11 Other aqueous cleaning solutions shall be permitted to be used for on-site recleaning permitted in 5.1.10.5.3.10 provided that they are as recommended in CGA G-4.1, *Cleaning Equipment for Oxygen Service*, and are listed in CGA O2-DIR, *Directory of Cleaning Agents for Oxygen Service*.

5.1.10.5.3.12 Material that has become contaminated internally and is not clean for oxygen service shall not be installed.

5.1.10.5.3.13 Joints shall be brazed within eight hours after the surfaces are cleaned for brazing.

5.1.10.5.4 Brazing Dissimilar Metals.

5.1.10.5.4.1 Flux shall only be used when brazing dissimilar metals such as copper and bronze or brass, using a silver (BAg series) brazing filler metal.

5.1.10.5.4.2 Surfaces shall be cleaned for brazing in accordance with 5.1.10.5.3.

5.1.10.5.4.3 Flux shall be applied sparingly to minimize contamination of the inside of the tube with flux.

5.1.10.5.4.4 The flux shall be applied and worked over the cleaned surfaces to be brazed using a stiff bristle brush to ensure complete coverage and wetting of the surfaces with flux.

5.1.10.5.4.5 Where possible, short sections of copper tube shall be brazed onto the noncopper component and the interior of the subassembly shall be cleaned of flux prior to installation in the piping system.

5.1.10.5.4.6 On joints DN20 (NPS ¾) (⅞ in. O.D.) size and smaller, flux-coated brazing rods shall be permitted to be used in lieu of applying flux to the surfaces being joined.

5.1.10.5.5* Nitrogen Purge.

5.1.10.5.5.1 When brazing, joints shall be continuously purged with oil-free, dry Nitrogen NF to prevent the formation of copper oxide on the inside surfaces of the joint.

5.1.10.5.5.2 The source of the purge gas shall be monitored and the installer shall be audibly alerted when the source content is low.

5.1.10.5.5.3 The purge gas flow rate shall be controlled by the use of a pressure regulator and flow meter or combination thereof.

5.1.10.5.5.4 Pressure regulators alone shall not be used to control purge gas flow rates.

5.1.10.5.5.5 In order to assure that all ambient air has been removed from the pipeline prior to brazing, an oxygen analyzer shall be used to verify the effectiveness of the purge. The oxygen analyzer shall read below 1 percent oxygen concentration before brazing is to begin.

5.1.10.5.5.6 During and after installation, openings in the piping system shall be kept sealed to maintain a nitrogen atmosphere within the piping to prevent debris or other contaminants from entering the system.

5.1.10.5.5.7 While a joint is being brazed, a discharge opening shall be provided on the opposite side of the joint from where the purge gas is being introduced.

5.1.10.5.5.8 The flow of purge gas shall be maintained until the joint is cool to the touch.

5.1.10.5.5.9 After the joint has cooled, the purge discharge opening shall be sealed to prevent contamination of the inside of the tube and maintain the nitrogen atmosphere within the piping system.

5.1.10.5.5.10 The final connection of new piping to an existing, in-use pipeline shall be permitted to be made without the use of a nitrogen purge.

5.1.10.5.5.11 After a final connection in a positive pressure medical gas pipeline is made without a nitrogen purge, an outlet in the immediate downstream zone of the affected portion(s) of both the new and existing in-use piping shall be tested in accordance with 5.1.12.3.9, Final Tie-In Test.

5.1.10.5.5.12* When using the autogenous orbital welding process, joints shall be continuously purged inside and outside with inert gas(es) in accordance with the qualified welding procedure.

5.1.10.5.6 Assembly and Heating Joints.

5.1.10.5.6.1 Tube ends shall be inserted fully into the socket of the fitting.

5.1.10.5.6.2 Where flux is permitted, the joint shall be heated slowly until the flux has liquefied.

5.1.10.5.6.3 After flux is liquefied, or where flux is not permitted to be used, the joint shall be heated quickly to the brazing temperature, taking care not to overheat the joint.

5.1.10.5.6.4 Techniques for heating the joint, applying the brazing filler metal, and making horizontal, vertical, and large-diameter joints shall be as stated in sections on "Applying Heat and Brazing" and "Horizontal and Vertical Joints" in Chapter VII, "Brazed Joints," in the CDA *Copper Tube Handbook*.

5.1.10.5.7 Inspection of Brazed Joints.

5.1.10.5.7.1 After brazing, the outside of all joints shall be cleaned by washing with water and a wire brush to remove any residue and permit clear visual inspection of the joint.

Copyright National Fire Protection Association
Provided by IHS under license with NFPA
No reproduction or networking permitted without license from IHS
Not for Resale

5.1.10.5.7.2 Where flux has been used, the wash water shall be hot.

5.1.10.5.7.3 Each brazed joint shall be visually inspected after cleaning the outside surfaces.

5.1.10.5.7.4 Joints exhibiting the following conditions shall not be permitted:

(1) Flux or flux residue (when flux or flux-coated BAg series rods are used with dissimilar metals)
(2) Base metal melting or erosion
(3) Unmelted filler metal
(4) Failure of the filler metal to be clearly visible all the way around the joint at the interface between the socket and the tube
(5) Cracks in the tube or component
(6) Cracks in the braze filler metal
(7) Failure of the joint to hold the test pressure under the installer-performed initial pressure test (5.1.12.2.3) and standing pressure test (5.1.12.2.6 or 5.1.12.2.7)

5.1.10.5.7.5 Brazed joints that are identified as defective under conditions 5.1.10.5.7.4(2) or 5.1.10.5.7.4(5) shall be replaced.

5.1.10.5.7.6 Brazed joints that are identified as defective under conditions 5.1.10.5.7.4(1), 5.1.10.5.7.4(3), 5.1.10.5.7.4(4), 5.1.10.5.7.4(6), or 5.1.10.5.7.4(7) shall be permitted to be repaired, except that no joint shall be reheated more than once before being replaced.

5.1.10.6 Welded Joints.

5.1.10.6.1 Welded joints for medical gas and medical–surgical vacuum systems shall be permitted to be made using a gas tungsten arc welding (GTAW) autogenous orbital procedure.

5.1.10.6.2 The GTAW autogenous orbital procedure and the welder qualification procedure shall be qualified in accordance with ASME Section IX, Welding and Brazing Qualifications of the ASME *Boiler and Pressure Vessel Code*.

5.1.10.6.3 Welder qualification procedures shall include a "bend test" and a "tensile test" per ASME Section IX on each tube size diameter.

5.1.10.6.4 Each welder shall qualify to a welding procedure specification (WPS) for each tube diameter.

5.1.10.6.5* GTAW autogenous orbital welded joints shall be purged during welding with a commercially available mixture (± 5 percent) of 75 percent helium and 25 percent argon.

5.1.10.6.6 The shield gas shall be as required in 5.1.10.6.5.

5.1.10.6.7 Test coupons shall be welded and inspected, as a minimum, at start of work and every 4 hours thereafter, or when the machine is idle for more than 30 minutes, and at the end of the work period.

5.1.10.6.8 Test coupons shall be inspected on the I.D. and O.D. by a qualified quality control inspector.

5.1.10.6.9 Test coupons shall also be welded at change of operator, weld head, welding power supply or gas source.

5.1.10.6.10 All production welds shall be visually inspected on the O.D. by the operator and any obvious weld failures shall be cut out and re-welded.

5.1.10.7 Special Fittings. The following special fittings shall be permitted to be used in lieu of brazed joints:

(1) Memory-metal couplings having temperature and pressure ratings joints not less than that of a brazed joint
(2) Listed or approved metallic gas tube fittings that, when made up, provide a permanent joint having the mechanical, thermal, and sealing integrity of a brazed joint
(3) Dielectric fittings where required by the manufacturer of special medical equipment to electrically isolate the equipment from the piping distribution system
(4) Axially swaged, elastic strain preload fittings providing metal to metal seal having pressure and temperature ratings not less than that of a brazed joint and when complete are permanent and nonseparable

5.1.10.8 Prohibited Joints. The following joints shall be prohibited throughout medical gas and vacuum distribution pipeline systems:

(1) Flared and compression-type connections, including connections to station outlets and inlets, alarm devices, and other components
(2) Other straight-threaded connections, including unions
(3) The use of pipe-crimping tools to permanently stop the flow of medical gas and vacuum piping shall be prohibited.

5.1.10.9 Joints in WAGD networks.

5.1.10.9.1 WAGD networks designed for operation at vacuum in excess of 130 mm (5 in.) HgV shall be permitted to be joined by any method usable for medical vacuum under 5.1.10.5.

5.1.10.9.2 WAGD networks designed for operation at vacuum below 130 mm (5 in.) HgV shall be joined by any method usable for medical vacuum under 5.1.10.5 or by any method that will result in a leak-free network when tested per 5.1.12.3.2.

5.1.10.10 Installation of Piping and Equipment.

5.1.10.10.1 Pipe Sizing.

5.1.10.10.1.1 Piping systems shall be designed and sized to deliver the required flow rates at the utilization pressures.

5.1.10.10.1.2 Mains and branches in medical gas piping systems shall be not less than DN15 (NPS ½) (⅝ in. O.D.) size.

5.1.10.10.1.3 Mains and branches in medical–surgical vacuum systems shall be not less than DN20 (NPS ¾) (⅞ in. O.D.) size.

5.1.10.10.1.4 Drops to individual station outlets and inlets shall be not less than DN15 (NPS ½) (⅝ in. O.D.) size.

5.1.10.10.1.5 Runouts to alarm panels and connecting tubing for gauges and alarm devices shall be permitted to be DN8 (NPS ¼) (⅜ in. O.D.) size.

5.1.10.10.2 Protection of Piping. Piping shall be protected against freezing, corrosion, and physical damage.

5.1.10.10.2.1 Piping exposed in corridors and other areas where subject to physical damage from the movement of carts, stretchers, portable equipment, or vehicles shall be protected.

5.1.10.10.2.2 Piping underground within buildings or embedded in concrete floors or walls shall be installed in a continuous conduit.

5.1.10.10.3 Location of Piping.

5.1.10.10.3.1 Piping risers shall be permitted to be installed in pipe shafts if protected from physical damage, effects of excessive heat, corrosion, or contact with oil.

Copyright National Fire Protection Association
Provided by IHS under license with NFPA
No reproduction or networking permitted without license from IHS
Not for Resale

5.1.10.10.3.2 Piping shall not be installed in kitchens, elevator shafts, elevator machine rooms, areas with open flames, electrical service equipment over 600 volts, and areas prohibited under NFPA 70, *National Electrical Code*, except for the following locations:

(1) Room locations for medical air compressor supply systems and medical–surgical vacuum pump supply systems
(2) Room locations for secondary distribution circuit panels and breakers having a maximum voltage rating of 600 volts.

5.1.10.10.3.3 Medical gas piping shall be permitted to be installed in the same service trench or tunnel with fuel gas lines, fuel oil lines, electrical lines, steam lines, and similar utilities provided that the space is ventilated (naturally or mechanically) and the ambient temperature around the medical gas piping is limited to 54°C (130°F) maximum.

5.1.10.10.3.4 Medical gas piping shall not be located where subject to contact with oil, including a possible flooding area in the case of a major oil leak.

5.1.10.10.4 Pipe Support.

5.1.10.10.4.1 Piping shall be supported from the building structure in accordance with MSS SP-69, *Pipe Hangers and Supports — Selection and Application.*

5.1.10.10.4.2 Hangers and supports shall comply with MSS SP-58, *Pipe Hangers and Supports — Materials, Design, and Manufacture.*

5.1.10.10.4.3 Hangers for copper tube shall have a copper finish and be sized for copper tube.

5.1.10.10.4.4 In potentially damp locations, copper tube hangers or supports that are in contact with the tube shall be plastic-coated or otherwise be insulated from the tube.

5.1.10.10.4.5 Maximum support spacing shall be in accordance with Table 5.1.10.10.4.5.

Table 5.1.10.10.4.5 Maximum Pipe Support Spacing

Pipe Size	Hanger Spacing mm	Hanger Spacing ft
DN8 (NPS ¼) (⅜ in. O.D.)	1520	5
DN10 (NPS ⅜) (½ in. O.D.)	1830	6
DN15 (NPS ½) (⅝ in. O.D)	1830	6
DN20 (NPS ¾) (⅞ in. O.D.)	2130	7
DN25 (NPS 1) (1⅛ in. O.D.)	2440	8
DN32 (NPS 1¼) (1⅜ in. O.D.)	2740	9
DN40 (NPS 1½) (1⅝ in. O.D.) and larger	3050	10
Vertical risers, all sizes		
Every floor but not to exceed:	4570	15

5.1.10.10.4.6 Where required, medical gas and vacuum piping shall be seismically restrained against earthquakes in accordance with the applicable building code.

5.1.10.10.5 Underground Piping Outside of Buildings.

5.1.10.10.5.1 Buried piping outside of buildings shall be installed below the local level of frost penetration.

5.1.10.10.5.2 The installation procedure for underground piping shall protect the piping from physical damage while being backfilled.

5.1.10.10.5.3 If underground piping is protected by a conduit, cover, or other enclosure, the following requirements shall be met:

(1) Access shall be provided at the joints for visual inspection and leak testing.
(2) The conduit, cover, or enclosure shall be self-draining and not retain groundwater in prolonged contact with the pipe.

5.1.10.10.5.4 Buried piping that will be subject to surface loads shall be buried at a depth that will protect the piping or its enclosure from excessive stresses.

5.1.10.10.5.5 The minimum backfilled cover above the top of the pipe or its enclosure for buried piping outside of buildings shall be 900 mm (36 in.), except that the minimum cover shall be permitted to be reduced to 450 mm (18 in.) where physical damage is otherwise prevented.

5.1.10.10.5.6 Trenches shall be excavated so that the pipe or its enclosure has firm, substantially continuous bearing on the bottom of the trench.

5.1.10.10.5.7 Backfill shall be clean and compacted so as to protect and uniformly support the pipe or its enclosure.

5.1.10.10.5.8 A continuous tape or marker placed immediately above the pipe or its enclosure shall clearly identify the pipeline by specific name.

5.1.10.10.5.9 A continuous warning means shall also be provided above the pipeline at approximately one-half the depth of bury.

5.1.10.10.5.10 Where underground piping is installed through a wall sleeve, the ends of the sleeve shall be sealed to prevent the entrance of ground water into the building.

5.1.10.10.6 Branch Takeoffs. Runouts from horizontal piping shall be taken off above the centerline of the main or branch pipe and rise vertically or at an angle of not more than 45 degrees from vertical.

5.1.10.10.7 Hose and Flexible Connectors.

5.1.10.10.7.1 Hose and flexible connectors, both metallic and nonmetallic, shall be no longer than necessary and shall not penetrate or be concealed in walls, floors, ceilings, or partitions.

5.1.10.10.7.2 Flexible connectors, metallic or nonmetallic, shall have a minimum burst pressure, with a gauge pressure of 6895 kPa (1000 psi).

5.1.10.10.8 Prohibited System Interconnections.

5.1.10.10.8.1 Two or more medical gas or vacuum piping systems shall not be interconnected for installation, testing, or any other reason.

5.1.10.10.8.2 Leak testing shall be accomplished by separately charging and testing each individual piping system.

5.1.10.10.9 Manufacturer's Instructions.

5.1.10.10.9.1 The installation of individual components shall be made in accordance with the instructions of the manufacturer.

5.1.10.10.9.2 Such instructions shall include directions and information deemed by the manufacturer to be adequate for

Copyright National Fire Protection Association
Provided by IHS under license with NFPA
No reproduction or networking permitted without license from IHS
Not for Resale

attaining proper operation, testing, and maintenance of the medical gas and vacuum systems.

5.1.10.10.9.3 Copies of manufacturer's instructions shall be left with the system owner.

5.1.10.10.10 Changes in System Use.

5.1.10.10.10.1 Where a positive pressure medical gas piping distribution system originally used or constructed for the use at one pressure and for one gas is converted for operation at another pressure or for another gas, all provisions of 5.1.10 shall apply as if the system were new.

5.1.10.10.10.2 A vacuum system shall not be permitted to be converted for use as a gas system.

5.1.10.10.11 Qualification of Installers.

5.1.10.10.11.1 The installation of medical gas and vacuum systems shall be made by qualified, competent technicians who are experienced in making such installations.

5.1.10.10.11.2 Installers of medical gas and vacuum systems shall meet the requirements of ASSE 6010, *Professional Qualification Standard for Medical Gas Systems Installers*.

5.1.10.10.11.3 Brazing shall be performed by individuals who are qualified under the provisions of 5.1.10.10.12.

5.1.10.10.11.4 Prior to any installation work, the installer of medical gas and vacuum piping shall provide and maintain documentation on the job site for the qualification of brazing procedures and individual brazers that is required under 5.1.10.10.12.

5.1.10.10.11.5 Health care organization personnel shall be permitted to install piping systems if all of the requirements of 5.1.10.10.11 are met during the installation.

5.1.10.10.12 Qualification of Brazing Procedures and Brazing.

5.1.10.10.12.1 Brazing procedures and brazer performance for the installation of medical gas and vacuum piping shall be qualified in accordance with either Section IX, Welding and Brazing Qualifications, of the ASME *Boiler and Pressure Vessel Code*, or AWS B2.2, *Standard for Brazing Procedure and Performance Qualification*, both as modified by 5.1.10.10.12.2 through 5.1.10.10.12.5.

5.1.10.10.12.2 Brazers shall be qualified by visual examination of the test coupon followed by sectioning.

5.1.10.10.12.3 The brazing procedure specification shall address cleaning, joint clearance, overlap, internal purge gas, purge gas flow rate, and filler metal.

5.1.10.10.12.4 The brazing procedure qualification record and the record of brazer performance qualification shall document filler metal used, cleaning, joint clearance, overlap, internal purge gas and flow rate during brazing of coupon, and the absence of internal oxidation in the completed coupon.

5.1.10.10.12.5 Brazing procedures qualified by a technically competent group or agency shall be permitted under the following conditions:

(1) The brazing procedure specification and the procedure qualification record meets the requirements of this standard.
(2) The employer obtains a copy of both the brazing procedure specification and the supporting qualification records from the group or agency and signs and dates these records, thereby accepting responsibility for the qualifications that were performed by the group or agency.
(3) The employer qualifies at least one brazer following each brazing procedure specification used.

5.1.10.10.12.6 An employer shall be permitted to accept brazer qualification records of a previous employer under the following conditions:

(1) The brazer has been qualified following the same or an equivalent procedure that the new employer uses.
(2) The new employer obtains a copy of the record of brazer performance qualification tests from the previous employer and signs and dates these records, thereby accepting responsibility for the qualifications performed by the previous employer.

5.1.10.10.12.7 Performance qualifications of brazers shall remain in effect indefinitely unless the brazer does not braze with the qualified procedure for a period exceeding 6 months, or there is a specific reason to question the ability of the brazer.

5.1.11 Labeling and Identification. See Table 5.1.11.

5.1.11.1 Pipe Labeling.

5.1.11.1.1 Piping shall be labeled by stenciling or adhesive markers that identify the patient medical gas, the support gas, or vacuum system, and include:

(1) The name of the gas/vacuum system or the chemical symbol per Table 5.1.11
(2) The gas or vacuum system color code per Table 5.1.11
(3) Where positive pressure gas piping systems operate at pressures other than the standard gauge pressure in Table 5.1.11, the pipe labeling shall include the operating pressure in addition to the name of the gas

5.1.11.1.2 Pipe labels shall be located as follows:

(1) At intervals of not more than 6.1 m (20 ft)
(2) At least once in or above every room
(3) On both sides of walls or partitions penetrated by the piping
(4) At least once in every story height traversed by risers

5.1.11.1.3 Medical gas pipeline shall not be painted.

5.1.11.2 Shutoff Valves.

5.1.11.2.1 Shutoff valves shall be identified as follows:

(1) The name or chemical symbol for the specific medical gas or vacuum system
(2) The room or areas served
(3) A caution to not close or open the valve except in emergency

5.1.11.2.2 Where positive pressure gas piping systems operate at pressures other than the standard gauge pressure of 345 kPa to 380 kPa (50 psi to 55 psi) or a gauge pressure of 1100 kPa to 1275 kPa (160 psi to 185 psi) for nitrogen or instrument air, the valve identification shall also include the nonstandard operating pressure.

5.1.11.2.3 Source valves shall be labeled in substance as follows:

SOURCE VALVE

FOR THE (SOURCE NAME).

Copyright National Fire Protection Association
Provided by IHS under license with NFPA
No reproduction or networking permitted without license from IHS
Not for Resale

Table 5.1.11 Standard Designation Colors and Operating Pressures for Gas and Vacuum Systems

Gas Service	Abbreviated Name	Colors (Background/ Text)	Standard Gauge Pressure
Medical air	Med Air	Yellow/black	345–380 kPa (50–55 psi)
Carbon dioxide	CO_2	Gray/black or gray/white	345–380 kPa (50–55 psi)
Helium	He	Brown/white	345–380 kPa (50–55 psi)
Nitrogen	N_2	Black/white	1100–1275 kPa (160–185 psi)
Nitrous oxide	N_2O	Blue/white	345–380 kPa (50–55 psi)
Oxygen	O_2	Green/white or white/green	345–380 kPa (50–55 psi)
Oxygen/carbon dioxide mixtures	O_2/CO_2 n% (n is % of CO_2)	Green/white	345–380 kPa (50–55 psi)
Medical–surgical vacuum	Med Vac	White/black	380 mm to 760 mm (15 in. to 30 in.) HgV
Waste anesthetic gas disposal	WAGD	Violet/white	Varies with system type
Other mixtures	Gas A%/Gas B%	Colors as above Major gas for background/ minor gas for text	None
Nonmedical air (Level 3 gas-powered device)		Yellow and white diagonal stripe/black	None
Nonmedical and level 3 vacuum		White and black diagonal stripe/black boxed	None
Laboratory air		Yellow and white checkerboard/black	None
Laboratory vacuum		White and black checkerboard/black boxed	None
Instrument air		Red/white	1100–1275 kPa (160–185 psi)

5.1.11.2.4 Main line valves shall be labeled in substance as follows:

MAIN LINE VALVE FOR THE
(GAS/VACUUM NAME) SERVING THE
(NAME OF THE BUILDING).

5.1.11.2.5 Riser valve(s) shall be labeled in substance as follows:

RISER FOR THE (GAS/VACUUM NAME)
SERVING (NAME OF THE AREA/BUILDING
SERVED BY THE PARTICULAR RISER).

5.1.11.2.6 Service valve(s) shall be labeled in substance as follows:

SERVICE VALVE FOR THE
(GAS/VACUUM NAME) SERVING
(NAME OF THE AREA/BUILDING
SERVED BY THE PARTICULAR VALVE).

5.1.11.3 Station Outlets and Inlets.

5.1.11.3.1 Station outlets and inlets shall be identified as to the name or chemical symbol for the specific medical gas or vacuum provided.

5.1.11.3.2 Where medical gas systems operate at pressures other than the standard gauge pressure of 345 kPa to 380 kPa (50 psi to 55 psi) or a gauge pressure of 1100 kPa to 1275 kPa (160 psi to 185 psi) for nitrogen, the station outlet identification shall include the nonstandard operating pressure in addition to the name of the gas.

5.1.11.4 Alarm Panels. Labeling of alarm panels shall comply with the requirements of 5.1.9.1(6) and 5.1.9.1(7).

5.1.12* Performance Criteria and Testing—Level 1 (Gases, Medical–Surgical Vacuum, and WAGD).

5.1.12.1 General.

5.1.12.1.1 Inspection and testing shall be performed on all new piped gas systems, additions, renovations, temporary installations, or repaired systems, to assure the facility, by a docu-

Copyright National Fire Protection Association
Provided by IHS under license with NFPA
No reproduction or networking permitted without license from IHS
Not for Resale

mented procedure, that all applicable provisions of this document have been adhered to and system integrity has been achieved or maintained.

5.1.12.1.2 Inspection and testing shall include all components of the system or portions thereof, including, but not limited to, gas bulk source(s), manifolds, compressed air source systems (e.g., compressors, dryers, filters, regulators), source alarms and monitoring safeguards, master alarms, pipelines, isolation valves, area alarms, zone valves, and station inlets (vacuum) and outlets (pressure gases).

5.1.12.1.3 All systems that are breached and components that are subject to additions, renovations, or replacement (e.g., new gas sources: bulk, manifolds, compressors, dryers, alarms) shall be inspected and tested.

5.1.12.1.4 Systems shall be deemed breached at the point of pipeline intrusion by physical separation or by system component removal, replacement, or addition.

5.1.12.1.5 Breached portions of the systems subject to inspection and testing shall be confined to only the specific altered zone and components in the immediate zone or area that is located upstream for vacuum systems and downstream for pressure gases at the point or area of intrusion.

5.1.12.1.6 The inspection and testing reports shall be submitted directly to the party that contracted for the testing, who shall submit the report through channels to the responsible facility authority and any others that are required.

5.1.12.1.7 Reports shall contain detailed listings of all findings and results.

5.1.12.1.8 The responsible facility authority shall review these inspection and testing records prior to the use of all systems to assure that all findings and results of the inspection and testing have been successfully completed.

5.1.12.1.9 All documentation pertaining to inspections and testing shall be maintained on-site within the facility.

5.1.12.1.10 Before piping systems are initially put into use, the facility authority shall be responsible for ascertaining that the gas/vacuum delivered at the outlet/inlet is that shown on the outlet/inlet label and that the proper connecting fittings are installed for the specific gas/vacuum service.

5.1.12.1.11 Acceptance of the verifier's report shall be permitted to satisfy the requirements in 5.1.12.1.10.

5.1.12.1.12 The removal of components within a source system for repair and re-installation, or the replacement of components like for like shall be treated as new work for the purposes of testing whenever such work involves cutting and/or brazing new piping.

5.1.12.1.12.1 Where no piping is changed, functional testing shall be performed as follows:

(1) To verify the function of the replaced device
(2) To assure no other equipment in the system has been adversely impacted

5.1.12.1.12.2 Where no piping is changed, in addition to tests of general function required by 5.1.12.1.12.1, testing shall be performed as follows:

(1) Pressure gas sources shall be tested for compliance with 5.1.12.3.14.2 as applicable to the equipment type.
(2) Medical air and instrument air sources shall be tested to 5.1.12.3.14.3.
(3) Vacuum and WAGD systems shall be tested to 5.1.12.3.14.4.
(4) Alarm systems shall be tested to 5.1.12.3.5.2 and 5.1.12.3.5.3.
(5) All affected components shall be tested as appropriate to that specific component (e.g., a replaced dew point monitor would be tested to 5.1.3.5.15).

5.1.12.2 Installer Performed Tests.

5.1.12.2.1 General.

5.1.12.2.1.1 The tests required by 5.1.12.2 shall be performed and documented by the installer prior to the tests listed in 5.1.12.3, System Verification.

5.1.12.2.1.2 The test gas shall be oil-free, dry Nitrogen NF.

5.1.12.2.1.3 Where manufactured assemblies are to be installed, the tests required by 5.1.12.2 shall be performed as follows:

(1) After completion of the distribution piping but before the standing pressure test
(2) Prior to installation of manufactured assemblies supplied through flexible hose or flexible tubing
(3) At all station outlets/inlets on installed manufactured assemblies supplied through copper tubing

5.1.12.2.2 Initial Blow Down. Piping in medical gas and vacuum distribution systems shall be blown clear by means of oil-free, dry Nitrogen NF as follows:

(1) After installation of the distribution piping
(2) Before installation of station outlets/inlets and other system components (e.g., pressure/vacuum alarm devices, pressure/vacuum indicators, pressure relief valves, manifolds, source equipment)

5.1.12.2.3 Initial Pressure Test.

5.1.12.2.3.1 Each section of the piping in medical gas and vacuum systems shall be pressure tested.

5.1.12.2.3.2 Initial pressure tests shall be conducted as follows:

(1) After installation of station outlets/inlets rough-in assemblies. Test caps shall be permitted to be used.
(2) Prior to the installation of components of the distribution piping system that would be damaged by the test pressure (e.g., pressure/vacuum alarm devices, pressure/vacuum indicators, line pressure relief valves, manufactured assemblies with flexible hose, hose, etc.).

5.1.12.2.3.3 The source shutoff valve shall remain closed during these tests.

5.1.12.2.3.4 The test pressure for pressure gases shall be 1.5 times the system working pressure but not less than a gauge pressure of 1035 kPa (150 psi).

5.1.12.2.3.5 The test pressure for vacuum shall be not less than a gauge pressure of 415 kPa (60 psi).

5.1.12.2.3.6 The test pressure shall be maintained until each joint has been examined for leakage by means of soapy water or other equally effective means of leak detection that is safe for use with oxygen.

Copyright National Fire Protection Association
Provided by IHS under license with NFPA
No reproduction or networking permitted without license from IHS
Not for Resale

5.1.12.2.3.7 Leaks, if any, shall be located, repaired (if permitted), replaced (if required), and retested.

5.1.12.2.4 Cross-Connection Test. It shall be determined that no cross-connections exist between the various medical gas and vacuum piping systems.

5.1.12.2.4.1 All piping systems shall be reduced to atmospheric pressure.

5.1.12.2.4.2 Sources of test gas shall be disconnected from all piping systems except for the one system being tested.

5.1.12.2.4.3 The system under test shall be charged with oil-free, dry Nitrogen NF to a gauge pressure of 345 kPa (50 psi).

5.1.12.2.4.4 After the installation of the individual faceplates with appropriate adapters matching outlet/inlet labels, each individual outlet/inlet in each installed medical gas and vacuum piping system shall be checked to determine that the test gas is being dispensed only from the piping system being tested.

5.1.12.2.4.5 The cross-connection test referenced in 5.1.12.2.4 shall be repeated for each installed medical gas and vacuum piping system.

5.1.12.2.4.6 The proper labeling and identification of system outlets/inlets shall be confirmed during these tests.

5.1.12.2.5 Piping Purge Test. The outlets in each medical gas piping system shall be purged to remove any particulate matter from the distribution piping.

5.1.12.2.5.1 Using appropriate adapters, each outlet shall be purged with an intermittent high-volume flow of test gas until the purge produces no discoloration in a clean white cloth.

5.1.12.2.5.2 This purging shall be started at the closest outlet/inlet to the zone valve and continue to the furthest outlet/inlet within the zone.

5.1.12.2.6 Standing Pressure Test for Positive Pressure Medical Gas Piping. After successful completion of the initial pressure tests under 5.1.12.2.3, medical gas distribution piping shall be subject to a standing pressure test.

5.1.12.2.6.1 Tests shall be conducted after the final installation of station outlet valve bodies, face plates, and other distribution system components (e.g., pressure alarm devices, pressure indicators, line pressure relief valves, manufactured assemblies, hose, etc.).

5.1.12.2.6.2 The source valve shall be closed during this test.

5.1.12.2.6.3 The piping systems shall be subjected to a 24-hour standing pressure test using oil-free, dry Nitrogen NF.

5.1.12.2.6.4 Test pressures shall be 20 percent above the normal system operating line pressure.

5.1.12.2.6.5 At the conclusion of the tests, there shall be no change in the test pressure other than that attributed to changes of ambient temperature, as permitted under 5.1.12.2.7.6.

5.1.12.2.6.6 Leaks, if any, shall be located, repaired (if permitted) or replaced (if required), and retested.

5.1.12.2.7 Standing Vacuum Test for Vacuum System. After successful completion of the initial pressure tests under 5.1.12.2.3, vacuum distribution piping shall be subjected to a standing vacuum test.

5.1.12.2.7.1 Tests shall be conducted after installation of all components of the vacuum system.

5.1.12.2.7.2 The piping systems shall be subjected to a 24-hour standing vacuum test.

5.1.12.2.7.3 Test pressure shall be between 300 mm (12 in.) HgV and full vacuum.

5.1.12.2.7.4 During the test, the source of test vacuum shall be disconnected from the piping system.

5.1.12.2.7.5 At the conclusion of the test, there shall be no change in the vacuum other than that attributed to changes of ambient temperature, as permitted under 5.1.12.2.7.6.

5.1.12.2.7.6 Test vacuum changes due to expansion or contraction shall be permitted to be determined by means of the following pressure–temperature relationship:

(1) The calculated final absolute pressure equals the initial absolute pressure times the final absolute temperature, divided by the initial absolute temperature.
(2) Absolute pressure is the gauge pressure reading plus 101.4 kPa (14.7 psi).
(3) Absolute temperature is the temperature reading plus 238°C (460°F).
(4) The final allowable gauge pressure reading equals the final allowable absolute pressure minus a gauge pressure of 101.4 kPa (14.7 psi).

5.1.12.2.7.7 Leaks, if any, shall be located, repaired (if permitted) or replaced (if required), and retested.

5.1.12.3 System Verification.

5.1.12.3.1 General.

5.1.12.3.1.1 Verification tests shall be performed only after all tests required in 5.1.12.2, Installer Performed Tests, have been completed.

5.1.12.3.1.2 The test gas shall be oil-free, dry Nitrogen NF or the system gas where permitted.

5.1.12.3.1.3 Testing shall be conducted by a party technically competent and experienced in the field of medical gas and vacuum pipeline testing and meeting the requirements of ASSE 6030, *Professional Qualifications Standard for Medical Gas Systems Verifiers.*

5.1.12.3.1.4 Testing shall be performed by a party other than the installing contractor.

5.1.12.3.1.5 When systems have not been installed by in-house personnel, testing shall be permitted by personnel of that organization who meet the requirements of 5.1.12.3.1.3.

5.1.12.3.1.6 All tests required under 5.1.12.3 shall be performed after installation of any manufactured assemblies supplied through flexible hose or tubing.

5.1.12.3.1.7 Where there are multiple possible connection points for terminals, each possible position shall be tested independently.

5.1.12.3.1.8 The gas of system designation shall be permitted to be used for all tests, regardless of the size of the system. This includes:

(1) Standing pressure (5.1.12.3.2)
(2) Cross-connection (5.1.12.3.3)
(3) Alarms (5.1.12.3.5)
(4) Piping purge (5.1.12.3.6)
(5) Piping particulates (5.1.12.3.7)

--`,,```,,,,````-`-`,,`,,`,`,,`---

Copyright National Fire Protection Association
Provided by IHS under license with NFPA
No reproduction or networking permitted without license from IHS
Not for Resale

5.1.12.3.2* Standing Pressure Test. Piping systems shall be subjected to a 10-minute standing pressure test at operating line pressure using the following procedure:

(1) After the system is filled with nitrogen or source gas, the source valve and all zone valves shall be closed.
(2) The piping system shall show no decrease in pressure after 10 minutes.
(3) Any leaks found shall be located, repaired, and retested per 5.1.12.2.6.

5.1.12.3.3 Cross-Connection Test. After closing of walls and completion of requirements of 5.1.12.2, Installer Performed Tests, it shall be determined that no cross-connection of piping systems exists by either of the methods detailed in 5.1.12.3.3.1 or 5.1.12.3.3.2.

5.1.12.3.3.1 Individual Pressurization.

(A) All medical gas and vacuum piping systems shall be reduced to atmospheric pressure.

(B) All sources of test gas from all of the medical gas and vacuum systems, with the exception of the one system to be checked, shall be disconnected.

(C) The system being checked shall be pressurized to a gauge pressure of 345 kPa (50 psi).

(D) With adapters matching outlet labels, each individual station outlet/inlet of all medical gas and vacuum systems installed shall be checked to determine that test gas is being dispensed only from the outlets/inlets of the piping system being tested.

(E) The source of test gas shall be disconnected and the system tested reduced to atmospheric pressure.

(F) Proceed to test each additional piping system until all medical gas and vacuum piping systems are free of cross-connections.

5.1.12.3.3.2 Pressure Differential.

(A) The pressure in all medical gas systems shall be reduced to atmospheric.

(B) The test gas pressure in all medical gas piping systems shall be increased to the values indicated in Table 5.1.12.3.3.2, simultaneously maintaining these nominal pressures throughout the test.

Table 5.1.12.3.3.2 Alternate Test Pressures

Medical Gas	Pressure (Gauge)
Gas mixtures	140 kPa (20 psi)
Nitrogen/instrument air	210 kPa (30 psi)
Nitrous oxide	275 kPa (40 psi)
Oxygen	345 kPa (50 psi)
Medical air	415 kPa (60 psi)
Systems at nonstandard pressures	70 kPa (10 psi) greater or less than any other system HgV Vacuum
Vacuum	510 mm (20 in.) HgV
WAGD	380 mm (15 in.) HgV (if so designed)

(C) Systems with nonstandard operating pressures shall be tested at a gauge pressure of at least 70 kPa (10 psi) higher or lower than any other system being tested.

(D) Any vacuum systems shall be in operation so that these vacuum systems are tested at the same time the medical gas systems are tested.

(E) Following the adjustment of pressures in accordance with 5.1.12.3.3.2(B) and 5.1.12.3.3.2(C), each station outlet for each medical gas system shall be tested using the gas-specific connection for each system with test gauge attached to verify that the correct test pressure/vacuum is present at each outlet/inlet of each system as listed in Table 5.1.12.3.3.2.

(F) Each test gauge used in performing this test shall be calibrated with the pressure indicator used for the line pressure regulator used to provide the source pressure.

(G) Each station outlet shall be identified by label (and color marking, if used), and the pressure indicated on the test gauge shall be that listed in Table 5.1.12.3.3.2 for the system being tested.

5.1.12.3.4 Valve Test. Valves installed in each medical gas and vacuum piping system shall be tested to verify proper operation and rooms or areas of control.

5.1.12.3.4.1 Records shall be made listing the rooms or areas controlled by each valve for each gas.

5.1.12.3.4.2 The information shall be utilized to assist and verify the proper labeling of the valves.

5.1.12.3.5 Alarm Test.

5.1.12.3.5.1 General.

(A) All warning systems for each medical gas and vacuum system(s) shall be tested to ensure that all components function properly prior to placing the system in service.

(B) Permanent records of these tests shall be maintained.

(C) Warning systems that are part of an addition to an existing piping system shall be tested prior to the connection of the new piping to the existing system.

(D) Tests of warning systems for new installations (initial tests) shall be performed after the cross-connection testing (5.1.12.3.3), but before purging the piping (5.1.12.3.6) and performing the remaining verification tests (5.1.12.3.7 through 5.1.12.3.14).

(E) Initial tests of warning systems that can be included in an addition or extension to an existing piping system shall be completed before connection of the addition to the existing system.

(F) Test gases for the initial tests shall be oil-free, dry Nitrogen NF, the gas of system designation, or operating vacuum.

(G) Where computer systems are used as substitutes for a required alarm panel as allowed under 5.1.9.2.2, the computer system shall be included in the alarm tests as modified in 5.1.9.4.

5.1.12.3.5.2 Master Alarms.

(A) The master alarm system tests shall be performed for each of the medical gas and vacuum piping systems.

(B) Permanent records of these tests shall be maintained with those required under 5.1.12.1.7.

--`,,```,,,,````-`-`,,`,,`,`,,`---

Copyright National Fire Protection Association
Provided by IHS under license with NFPA
No reproduction or networking permitted without license from IHS
Not for Resale

(C) The audible and noncancelable visual signals of 5.1.9.1 shall indicate if the pressure in the main line increases or decreases 20 percent from the normal operating pressure.

(D) The operation of all master alarm signals referenced in 5.1.9.2.4 shall be verified.

5.1.12.3.5.3 Area Alarms. The warning signals for all medical gas piping systems supplying anesthetizing locations and other vital life-support and critical care areas, such as post-anesthesia recovery, intensive care units, coronary care units, emergency suites, and operating rooms shall be tested to verify an alarm condition if the pressure in the piping system increases or decreases 20 percent from the normal operating pressure for positive-pressure gases, or when the vacuum system(s) drop below a gauge pressure of 300 mm (12 in.) HgV.

5.1.12.3.6 Piping Purge Test. In order to remove any traces of particulate matter deposited in the pipelines as a result of construction, a heavy, intermittent purging of the pipeline shall be done.

5.1.12.3.6.1 The appropriate adapter shall be obtained from the facility or manufacturer, and high purge rates of at least 225 Nl/min (8 SCFM) shall be put on each outlet.

5.1.12.3.6.2 After the purge is started, it shall be rapidly interrupted several times until the purge produces no discoloration in a white cloth loosely held over the adapter during the purge.

5.1.12.3.6.3 In order to avoid possible damage to the outlet and its components, this test shall not be conducted using any implement other than the proper adapter.

5.1.12.3.7 Piping Particulate Test. For each positive-pressure gas system, the cleanliness of the piping system shall be verified.

5.1.12.3.7.1 A minimum of 1000 L (35 ft^3) of gas shall be filtered through a clean, white 0.45-micron filter at a minimum flow rate of 100 Nl/min (3.5 SCFM).

5.1.12.3.7.2 Twenty-five percent of the zones shall be tested at the outlet most remote from the source.

5.1.12.3.7.3 The filter shall accrue no more than 0.001 g (1 mg) of matter from any outlet tested.

5.1.12.3.7.4 If any outlet fails this test, the most remote outlet in every zone shall be tested.

5.1.12.3.7.5 The test shall be performed with the use of oil-free, dry Nitrogen NF.

5.1.12.3.8 Piping Purity Test. For each patient medical gas system, the purity of the piping system shall be verified.

5.1.12.3.8.1 These tests shall be performed with oil-free, dry Nitrogen NF or the gas of system designation.

5.1.12.3.8.2 The tests shall be for total nonmethane hydrocarbons (as methane), and halogenated hydrocarbons, and compared with the source gas.

5.1.12.3.8.3 This test shall be performed at the outlet most remote from the source.

5.1.12.3.8.4 The difference between the two tests shall in no case exceed the following:

(1) Total hydrocarbons (excluding methane), 5 ppm
(2) Halogenated hydrocarbons, 5 ppm

5.1.12.3.8.5 A test for dew point shall be conducted at the outlet most remote from the source and the dew point shall not exceed 500 ppm or −12°C (10°F) at 345 kPa (50 psig).

5.1.12.3.9 Final Tie-In Test.

5.1.12.3.9.1 Prior to the connection of any work or any extension or addition to an existing piping system, the tests in 5.1.12.3.1 through 5.1.12.3.8 shall be successfully performed on the new work.

5.1.12.3.9.2 Each joint in the final connection between the new work and the existing system shall be leak-tested with the gas of system designation at the normal operating pressure by means of soapy water or other means safe for use with oxygen. Vacuum joints shall be tested using an ultrasonic leak detector or other means that will permit detection of leaks in an active vacuum system.

5.1.12.3.9.3 For pressure gases, immediately after the final connection is made and leak-tested, the specific altered zone and components in the immediate zone or area that is downstream from the point or area of intrusion shall be purged per 5.1.12.3.6.

5.1.12.3.9.4 Before the new work is used for patient care, positive-pressure gases shall be tested for operational pressure, and gas concentration in accordance with 5.1.12.3.10 and 5.1.12.3.11.

5.1.12.3.9.5 Permanent records of these tests shall be maintained in accordance with 9.8.1.

5.1.12.3.10 Operational Pressure Test. Operational pressure tests shall be performed at each station outlet/inlet or terminal where the user makes connections and disconnections.

5.1.12.3.10.1 Tests shall be performed with the gas of system designation or the operating vacuum.

5.1.12.3.10.2 All gas outlets with a gauge pressure of 345 kPa (50 psi), including, but not limited to, oxygen, nitrous oxide, medical air, and carbon dioxide, shall deliver 100 SLPM (3.5 SCFM) with a pressure drop of not more than 35 kPa (5 psi) and static pressure of 345 kPa to 380 kPa (50 psi to 55 psi).

5.1.12.3.10.3 Support gas outlets shall deliver 140 SLPM (5.0 SCFM) with a pressure drop of not more than 35 kPa (5 psi) gauge and static pressure of 1100 kPa to 1275 kPa (160 psi to 185 psi) gauge.

5.1.12.3.10.4 Medical–surgical vacuum inlets shall draw 85 Nl/min (3 SCFM) without reducing the vacuum pressure below 300 mm (12 in.) gauge HgV at any adjacent station inlet.

5.1.12.3.10.5 Oxygen and medical air outlets serving critical care areas shall permit a transient flow rate of 170 SLPM (6 SCFM) for 3 seconds.

5.1.12.3.11 Medical Gas Concentration Test. After purging each system with the gas of system designation, the following shall be performed:

(1) Each pressure gas source and outlet shall be analyzed for concentration of gas, by volume.
(2) Analysis shall be conducted with instruments designed to measure the specific gas dispensed.
(3)*Allowable concentrations shall be as indicated in Table 5.1.12.3.11.

5.1.12.3.12 Medical Air Purity Test (Compressor System).

5.1.12.3.12.1 The medical air source shall be analyzed for concentration of contaminants by volume prior to the source valve being opened.

Copyright National Fire Protection Association
Provided by IHS under license with NFPA
No reproduction or networking permitted without license from IHS
Not for Resale

Table 5.1.12.3.11 Gas Concentrations

Medical Gas	Concentration
Oxygen	≥97% oxygen
Nitrous oxide	≥99% nitrous oxide
Nitrogen	≤1% oxygen or ≥99% nitrogen
Medical air	19.5–23.5% oxygen
Other gases	Concentration as specified by ±1% unless otherwise specified.

5.1.12.3.12.2 Sample(s) shall be taken for the air system test at the system sample port.

5.1.12.3.12.3 The test results shall not exceed the parameters in Table 5.1.12.3.12.3.

Table 5.1.12.3.12.3 Contaminant Parameters for Medical Air

Parameter	Limit Value
Pressure dew point	4°C (39°F)
Carbon monoxide	10 ppm
Carbon dioxide	500 ppm
Gaseous hydrocarbons	25 ppm (as methane)
Halogenated hydrocarbons	2 ppm

5.1.12.3.13 Labeling. The presence and correctness of labeling required by this standard for all components (e.g., station outlets/inlets, shutoff valves, and alarm panels) shall be verified.

5.1.12.3.14 Source Equipment Verification.

5.1.12.3.14.1 General. Source equipment verification shall be performed following the installation of the interconnecting pipelines, accessories, and source equipment.

5.1.12.3.14.2 Gas Supply Sources.

(A) The system apparatus shall be tested for proper function, including the changeover from primary to secondary supply (with its changeover signal) and the operation of the reserve (with its reserve-in-use signal), before the system is put into service.

(B) If the system has an actuating switch and signal to monitor the contents of the reserve, its function shall be tested before the system is put into service.

(C) If the system has an actuating switch and signal to monitor the pressure of the reserve unit, its function shall be tested before the system is put into service.

(D) Testing of the bulk supply signal and the master signal panel installations shall be arranged with the owner or the organization responsible for the operation and maintenance of the supply system for the testing of the bulk supply signals to ensure proper identification and activation of the master signal panels to be sure the facility can monitor the status of that supply system.

(E) The tests required in 5.1.12.3.14.2(D) shall also be conducted when the storage units are changed or replaced.

5.1.12.3.14.3 Medical Air Compressor Systems.

(A) Tests of the medical air compressor system shall include the purity test for air quality, and the test of the alarm sensors after calibration and setup per the manufacturer's instructions, as well as lead-lag controls.

(B) Tests shall be conducted at the sample port of the medical air system.

(C) The operation of the system control sensors, such as dew point, air temperature, and all other air quality monitoring sensors and controls, shall be checked for proper operation and function before the system is put into service.

(D) The quality of medical air as delivered by the compressor air supply shall be verified after installation of new components prior to use by patients.

(E) The air quality tests in 5.1.12.3.14.3(D) shall be performed after a minimum of 24 hours of operation in accordance with 5.1.12.3.14.3(F) of the machinery.

(F) A demand of approximately 25 percent of the rated compressor capacity shall be created to cause the compressors to cycle on and off continuously and the dryers to operate for the 24-hour period.

5.1.12.3.14.4 Medical–Surgical Vacuum Systems. The proper functioning of the medical–surgical vacuum source system(s) shall be tested before it is put into service.

5.1.13* Level 1 Operation and Management.

5.1.13.1 Special Precautions — Piped Patient Gas/Vacuum Systems.

5.1.13.1.1 Piping systems shall not be used for the distribution of flammable anesthetic gases.

5.1.13.1.2 Nonflammable medical gas systems used to supply gases for respiratory therapy shall be installed in accordance with 5.1.1 through 5.1.11 of this chapter.

5.1.13.1.3 Piping systems for gases shall not be used as a grounding electrode.

5.1.13.1.4* Liquid or debris shall not be introduced into the medical–surgical vacuum system for disposal.

5.1.13.1.5 The medical–surgical vacuum system shall not be used for vacuum steam condensate return or other nonmedical or nonsurgical applications.

5.1.13.2 Gas/Vacuum Systems Information and Warning Signs.

5.1.13.2.1 The gas content of medical gas and vacuum piping systems shall be labeled in accordance with 5.1.11.1.

5.1.13.2.2 Labels for shutoff valves shall be in accordance with 5.1.11.2, and updated when modifications are made changing the areas served.

5.1.14 Level 1 Support Gases.

5.1.14.1 Applicability. Support gases (nitrogen and instrument air) shall be gases that are not used for respiration, but are used for powering pneumatic devices (medical–surgical tools, equipment booms, pendants) related to patient care.

5.1.14.2 Nature of Hazards. Support gas systems are subject to the same hazards as are present in any piped medical gas system with the additional hazard of operating at higher pressures.

Copyright National Fire Protection Association
Provided by IHS under license with NFPA
No reproduction or networking permitted without license from IHS
Not for Resale

5.1.14.3 Sources. Requirements for support gas sources shall be in accordance with the following:

(1) Paragraphs 5.1.3.1 through 5.1.3.4 for nitrogen
(2) Paragraph 5.1.3.8 for instrument air

5.1.14.4 Valves. Requirements for support gas shall be in accordance with 5.1.4.1 through 5.1.4.10.

5.1.14.5 Outlets.

5.1.14.5.1 Requirements for nitrogen support gas outlets shall be in accordance with 5.1.5.1, 5.1.5.2, 5.1.5.4 through 5.1.5.8, 5.1.5.11, and 5.1.5.13 through 5.1.5.15.

5.1.14.5.2 Requirements for other support gas outlets shall be in accordance with 5.1.5.1, 5.1.5.2, 5.1.5.4, 5.1.5.5, 5.1.5.7, 5.1.5.8, 5.1.5.11 and 5.1.5.13 through 5.1.5.15.

5.1.14.6 Manufactured Assemblies. Requirements for support gases in manufactured assemblies shall be in accordance with 5.1.6.1 through 5.1.6.9.

5.1.14.7 Pressure Indicators. Requirements for support gas pressure indicators shall be in accordance with 5.1.8.1.1 through 5.1.8.1.4, 5.1.8.1.6, 5.1.8.1.7, and 5.1.8.2.

5.1.14.8 Warning Systems.

5.1.14.8.1 General requirements for support gas warning systems shall be in accordance with 5.1.9.1.

5.1.14.8.2 Master alarm requirements for support gas shall be in accordance with 5.1.9.2.

5.1.14.8.3 Area alarm requirements for support gas shall be in accordance with 5.1.9.3.

5.1.14.8.4 Local alarm requirements for support gas shall be in accordance with 5.1.9.4.

5.1.14.9 Distribution. Requirements for support gas piping shall be in accordance with 5.1.10.1, 5.1.10.3, 5.1.10.4, 5.1.10.5.1 through 5.1.10.5.6, 5.1.10.7, 5.1.10.7(1), 5.1.10.7(2), 5.1.10.7(3), and 5.1.10.10.

5.1.14.10 Labeling and Identification. Requirements for support gas labeling shall be in accordance with 5.1.11.1 through 5.1.11.4.

5.1.14.11 Performance Testing. Requirements for support gas performance testing shall be in accordance with 5.1.12 with the following exceptions:

(1) The piping purity test (5.1.12.3.8) shall be permitted to be omitted.
(2) The medical gas concentration test (5.1.12.3.11) shall be permitted to be omitted.

5.2 Level 2 Piped Gas and Vacuum Systems.

5.2.1* Applicability. These requirements shall apply to health care facilities that qualify for Level 2 systems as referenced in Chapters 13 through 21.

5.2.2 Nature of Hazards of Gas and Vacuum Systems. See Section B.2.

5.2.3 Level 2 Sources.

5.2.3.1 Central Supply System Identification and Labeling. Level 2 systems shall comply with 5.1.3.1.

5.2.3.2 Central Supply Operations. Level 2 systems shall comply with 5.1.3.2.

5.2.3.3 Central Supply System Locations. Level 2 systems shall comply with 5.1.3.3.

5.2.3.4 Central Supply Systems. Level 2 systems shall comply with 5.1.3.4.

5.2.3.5 Level 2 Medical Air Supply Systems. Level 2 systems shall comply with 5.1.3.5, except as follows:

(1) Medical air compressors, dryers, aftercoolers, filters, and regulators shall be permitted to be simplex.
(2) The facility staff shall develop their emergency plan to deal with the loss of medical air.

5.2.3.6 Level 2 Medical–Surgical Vacuum. Level 2 systems shall comply with 5.1.3.6, except as follows:

(1) Medical–surgical vacuum systems shall be permitted to be simplex.
(2) The facility staff shall develop their emergency plan to deal with the loss of medical–surgical vacuum.

5.2.3.7 Level 2 Waste Anesthetic Gas Disposal (WAGD). Level 2 systems shall comply with 5.1.3.7, except as follows:

(1) Medical WAGD pumps shall be permitted to be simplex.
(2) The facility staff shall develop their emergency plan to deal with the loss of WAGD.

5.2.3.8 Instrument Air Supply Systems. Level 2 systems shall comply with 5.1.3.8.

5.2.4 Valves. Level 2 systems shall comply with 5.1.4.

5.2.5 Station Outlets/Inlets. Level 2 systems shall comply with 5.1.5.

5.2.6 Manufactured Assemblies. Level 2 systems shall comply with 5.1.6.

5.2.7 Surface-Mounted Medical Gas Rails. Level 2 systems shall comply with 5.1.7.

5.2.8 Pressure and Vacuum Indicators. Level 2 systems shall comply with 5.1.8.

5.2.9 Warning Systems (Level 2). Warning systems associated with Level 2 systems shall provide the master, area, and local alarm functions of a Level 1 system as required in 5.1.8, except as follows:

(1) Warning systems shall be permitted to be a single alarm panel.
(2) The alarm panel shall be located in an area of continuous surveillance while the facility is in operation.
(3) Pressure and vacuum switches/sensors shall be mounted at the source equipment with a pressure indicator at the master alarm panel.

5.2.10 Level 2 Distribution. Level 2 systems shall comply with 5.1.10.

5.2.11 Labeling and Identification. Level 2 systems shall comply with 5.1.11.

5.2.12 Performance Criteria and Testing — Level 2 (Gas, Medical–Surgical Vacuum, and WAGD). Level 2 systems shall comply with 5.1.12.

5.2.13 Level 2 Operation and Management. Level 2 systems shall comply with 5.1.13.

5.3* Level 3 Piped Gas and Vacuum Systems.

5.3.1* Applicability.

5.3.1.1 These requirements shall apply to health care facilities that qualify to install Level 3 systems as referenced in Chapters 13 through 21.

Copyright National Fire Protection Association
Provided by IHS under license with NFPA
No reproduction or networking permitted without license from IHS
Not for Resale

5.3.1.2 Wherever the term *medical gas* occurs in Level 3, the term shall apply to all piped systems of nitrous oxide and oxygen only.

5.3.1.3 Wherever the term *vacuum* occurs, the provisions shall apply to all piped systems for vacuum.

5.3.1.4 An existing Level 3 system that is not in strict compliance with the provisions of this standard shall be permitted to be continued in use as long as the authority having jurisdiction has determined that such use does not constitute a distinct hazard to life.

5.3.2 Nature of Hazards of Gas and Vacuum Systems. Potential fire and explosion hazards associated with medical gas systems and vacuum systems shall be considered in the design, installation, testing, operation, and maintenance of these systems. *(See Annex B.2.)*

5.3.3 Level 3 Sources.

5.3.3.1 Medical Gas Supply System Identification and Labeling.

5.3.3.1.1 Only cylinders and containers constructed, tested, and maintained in accordance with U.S. Department of Transportation specifications and regulations shall be permitted to be used.

5.3.3.1.2 Cylinder contents shall be identified by attached labels or stencils naming the contents in accordance with CGA C-7, *Guide to the Preparation of Precautionary Labeling and Marking of Compressed Gas Containers.*

5.3.3.1.3 Contents of cylinders and containers shall be verified prior to use.

5.3.3.1.4 Labels shall not be defaced, altered, or removed, and connecting fittings shall not be modified.

5.3.3.1.5 Locations containing medical gases other than oxygen shall have their door(s) labeled substantially as follows:

CAUTION

Medical Gases

NO Smoking or Open Flame

Room May Have Insufficient Oxygen

Open Door and Allow Room to Ventilate before Entering

5.3.3.2* Supply System Operations.

5.3.3.2.1 The use of adapters or conversion fittings to adapt one gas-specific fitting to another shall be prohibited.

5.3.3.2.2 Only medical gas cylinders, reusable shipping containers, and their accessories shall be permitted to be stored in rooms containing medical gas supply systems or medical gas cylinders.

5.3.3.2.3 No flammable materials, cylinders containing flammable gases, or containers containing flammable liquids shall be stored in rooms with medical gas cylinders.

5.3.3.2.4 Wooden racks for cylinder storage shall be permitted.

5.3.3.2.5 If cylinders are wrapped when received, the wrappers shall be removed prior to storage.

5.3.3.2.6 Cylinders not in use shall have their valve protection caps secured tightly in place.

5.3.3.2.7 Cylinders without correct markings or whose markings and gas-specific fittings do not match shall not be used.

5.3.3.2.8 Cryogenic liquid storage units intended to supply gas to the facility shall not be used to transfill other liquid storage vessels.

5.3.3.2.9 Care shall be exercised when handling cylinders that have been exposed to freezing temperatures or containers that contain cryogenic liquids to prevent injury to the skin.

5.3.3.2.10 Cylinders containing compressed gases and containers for volatile liquids shall be kept away from radiators, steam piping, and like sources of heat.

5.3.3.2.11 When cylinder valve protection caps are supplied, they shall be secured tightly in place unless the cylinder is connected for use.

5.3.3.2.12 Containers shall not be stored in a tightly closed space such as a closet.

5.3.3.3 Source Systems — Level 3.

5.3.3.3.1 Cylinders in service and in storage shall be individually secured and located to prevent falling or being knocked over.

5.3.3.3.2 Locations for Medical Gas Supply Systems.

5.3.3.3.2.1 Medical gas supply systems shall be permitted to be located indoors or outdoors.

5.3.3.3.2.2 Air compressors and vacuum pumps shall be located separately from medical gas (i.e., oxygen and nitrous oxide) cylinder storage enclosures.

5.3.3.3.2.3 Locations for supply systems shall not be used for storage purposes other than for containers of nonflammable gases except that storage of full or empty containers shall be permitted.

5.3.3.3.2.4 Other nonflammable medical gas supply systems or storage locations shall be permitted to be in the same location with oxygen or nitrous oxide, or both, provided adequate ventilation to prevent the development of oxygen-deficient atmospheres in the event of functioning of cylinder or manifold pressure-relief devices is provided.

5.3.3.3.2.5 Enclosures shall not be located in close proximity to open electrical conductors and transformers.

5.3.3.3.2.6 Enclosures shall not be located adjacent to storage tanks for flammable or combustible liquids.

5.3.3.3.3 Indoor Locations.

5.3.3.3.3.1 Enclosures for medical gases shall serve no other purpose.

5.3.3.3.3.2 Enclosures shall be constructed of an assembly of building materials with a fire resistance rating of at least 1 hour.

5.3.3.3.3.3 Enclosures shall not communicate directly with anesthetizing or storage locations for flammable anesthetizing agents.

5.3.3.3.3.4 Other nonflammable (inert) medical gases shall be permitted to be stored in the enclosure.

5.3.3.3.3.5 Flammable gases shall not be stored with oxidizing agents.

5.3.3.3.3.6 Storage of full and/or empty cylinders is permitted in the same enclosure.

Copyright National Fire Protection Association
Provided by IHS under license with NFPA
No reproduction or networking permitted without license from IHS
Not for Resale

5.3.3.3.4 Outdoor Locations.

5.3.3.3.4.1 Storage facilities that are adjacent to a building wall shall be located such that the distance to any window of the adjacent building is greater than 7.62 m (25 ft).

5.3.3.3.5 Doors and Gates. Enclosures for medical gas supply systems shall be provided with doors or gates.

5.3.3.3.5.1 If the enclosure is outside and/or remote from the single treatment facility, it shall be kept locked.

5.3.3.3.5.2 If the storage area is within the single treatment facility (i.e., is not remote), it shall be permitted to be locked.

5.3.3.3.6 Ventilation. Enclosures for medical gas systems (i.e., oxygen and nitrous oxide) shall be ventilated.

5.3.3.3.6.1 Where the total volume of Level 3 medical gases (i.e., oxygen and nitrous oxide) connected and in storage is greater than 84,950 L (3000 ft^3) at STP, indoor supply locations shall be provided with dedicated mechanical ventilation systems that draw air from within .3 m (1 ft) of the floor and operate continuously.

5.3.3.3.6.2 The power supply for mechanical ventilation fans shall conform to the requirements of an essential electrical system as described in Chapter 4 of this document.

5.3.3.3.6.3 Where the total volume of Level 3 medical gases (i.e., oxygen and nitrous oxide) connected and in storage is less than 84,950 L (3000 ft^3) at STP, natural ventilation shall be permitted to be employed.

5.3.3.3.6.4 Where natural ventilation is permitted, it shall consist of two louvered openings, each having a minimum free area of 46,500 mm^2 (72 $in.^2$), with one located within .3 m (1 ft) of the floor and one located within .3 m (1 ft) of the ceiling.

5.3.3.3.6.5 Louvered natural ventilation openings shall not be located in an exit access corridor.

5.3.3.3.6.6 Mechanical ventilation shall be provided if the requirements of 5.3.3.3.6.5 cannot be met.

5.3.3.3.6.7 Heating (where required) shall be by steam, hot water, or other indirect means.

5.3.3.3.6.8 Where enclosures (interior or exterior) for medical gas supply systems are located near sources of heat, such as furnaces, incinerators, or boiler rooms, they shall be of construction that protects cylinders from reaching temperatures 54°C (130°F).

5.3.3.3.7 Locations for Air Compressors and Vacuum Pumps.

5.3.3.3.7.1 Air compressors and vacuum pumps shall be installed in a designated mechanical equipment area, ventilated and with required utilities (e.g., electricity, drains, lighting, etc.).

5.3.3.4 Medical Gas Supply Systems — Level 3.

5.3.3.4.1 Mechanical means shall be provided to ensure the connection of cylinders containing the correct gas to the piping system.

5.3.3.4.1.1 Cylinder valve outlets for nonflammable gases and gas mixtures for medical purposes shall comply with CGA V-1, *Compressed Gas Association Standard for Compressed Gas Cylinder Valve Outlet and Inlet Connections* (ANSI B57.1; CSA B96).

5.3.3.4.1.2 Threaded connections between the regulators and the piping system shall comply with CGA V-5, *Diameter-Index Safety System (Noninterchangeable Low Pressure Connections for Medical Gas Applications).*

5.3.3.4.2 Level 3 medical gas supply systems shall include the components designated in 5.3.3.4.2.1 through 5.3.3.4.2.3.

5.3.3.4.2.1 A shutoff valve or check valve shall be installed downstream of each pressure regulator.

5.3.3.4.2.2 A pressure relief valve set at 50 percent above normal line pressure shall be installed downstream of the shutoff valve or check valve required in 5.3.3.4.2.1.

5.3.3.4.2.3 Pressure relief valves shall be of brass, bronze, or stainless steel and designed for oxygen service.

5.3.3.4.3 Flexible connectors of other than all-metal construction used to connect outlets of pressure regulators to fixed piping shall not exceed 1.52 m (5 ft) in length and shall not penetrate walls, floors, ceilings, or partitions.

5.3.3.4.3.1 Flexible connectors shall comply with the provisions of 5.3.3.4.1.2.

5.3.3.4.3.2 Flexible connectors shall have a pressure rating of at least a gauge pressure of 6895 kPa (1000 psi).

5.3.3.4.4* Supply systems supplying only a single treatment facility shall contain the following: a minimum of two banks of cylinders of oxygen and a minimum of two cylinders of nitrous oxide (if used), each containing the greater of either at least an average day's supply, or one of the following:

(1) When storage is not remote, two cylinders of oxygen and one cylinder of nitrous oxide (if used)
(2) When storage is remote, two cylinders of oxygen, minimum, and two cylinders of nitrous oxide, minimum (if used)

5.3.3.4.4.1 The cylinders for each gas service shall be manifolded so that the cylinders can alternately supply the piping system.

5.3.3.4.4.2* When the primary cylinder is unable to supply the system, the secondary cylinder shall be capable of being switched to supply the system.

5.3.3.4.4.3 When storage is not remote, either manual or automatic switchover shall be permitted to be used.

5.3.3.4.4.4* When the supply system is remote, automatic switchover shall be provided.

5.3.3.4.5 Supply systems supplying multiple treatment facilities shall contain the following: two banks of cylinders each containing at least the greater of an average day's supply or at least two cylinders of oxygen and two cylinders of nitrous oxide (if used).

5.3.3.4.5.1 The cylinders for each gas service shall be manifolded so that the cylinders can alternately supply the piping system.

5.3.3.4.5.2 When the primary bank cylinder(s) is unable to supply the system, the secondary cylinder(s) shall automatically operate to supply the piping system.

5.3.3.5* Level 3 Gas-Powered Devices Supply Systems.

5.3.3.5.1 Level 3 gas-powered devices supply systems shall be used where compressed air is required to drive dynamic devices used for patient treatment.

5.3.3.5.1.1 A gas-powered devices supply system shall be permitted to be used to supply power to gas-driven devices for

Copyright National Fire Protection Association
Provided by IHS under license with NFPA
No reproduction or networking permitted without license from IHS
Not for Resale

scavenging, but only where the exhaust of the scavenging device is a closed vent to the outside of the building.

5.3.3.5.2* Level 3 gas-powered devices supply systems shall be obtained from and be installed under the supervision of a manufacturer(s) or supplier(s) familiar with proper practices for its construction and use.

5.3.3.5.3 Level 3 gas-powered devices supply systems shall include the following:

(1) Disconnect switch(es)
(2) Motor-starting device(s)
(3) Motor overload protection device(s)
(4) One or more compressors
(5) For single, duplex, or multiple compressor systems, a means for activation/deactivation of each individual compressor
(6) When multiple compressors are used, manual or automatic means to alternate individual compressors
(7) When multiple compressors are used, manual or automatic means to activate the additional unit(s) should the in-service unit(s) be incapable of maintaining adequate pressure
(8) Intake filter–muffler(s) of the dry type
(9) Receiver(s) with drain plug or a manual drain or an automatic drain
(10) Shutoff valves
(11) Air dryer(s) that maintain 40 percent relative humidity at operating pressure and temperature
(12) In-line final particulate filters rated at 5 microns, 98 percent efficiency, with filter status indicator to ensure the delivery of compressed air with a maximum allowable 0.05 ppm liquid oil
(13) Pressure regulator(s)
(14) Pressure relief valve
(15) Pressure indicator
(16) Moisture indicator
(17) Oil indicator

5.3.3.5.3.1 A reserve for cylinders shall be permitted to be used to supplement or act as a reserve for the compressor source.

5.3.3.5.4 Receiver.

5.3.3.5.4.1 Receiver(s) shall have the capacity to prevent short cycling of the compressor(s).

5.3.3.5.4.2 Receiver(s) shall comply with Section VIII, Unfired Pressure Vessels, of the ASME *Boiler and Pressure Vessel Code.*

5.3.3.5.5* Moisture Indicator.

5.3.3.5.5.1 The moisture indicator shall be located in the active airstream prior to or after the receiver and upstream of any system pressure regulators.

5.3.3.5.5.2 The moisture indicator shall indicate (i.e., by color change, digital readout, or other method understood by the user) when the relative humidity of the compressed air exceeds 40 percent at line pressure and temperature.

5.3.3.5.6 Oil Indicator.

5.3.3.5.6.1 The oil indicator shall be located downstream of the receiver.

5.3.3.5.6.2 The oil indicator shall measure (i.e., by color change, digital readout, or other method understood by the user) an oil concentration of 0.05 ppm ± 0.03 ppm in air at a gauge pressure of 550 kPa to 690 kPa (80 psi to 100 psi).

5.3.3.5.7* Source of Intake Air.

5.3.3.5.7.1 Air sources for a compressor(s) located inside the building shall meet the following requirements:

(1) Be located within a room where no chemical-based material is stored or used and that is not an operatory
(2) Not be taken from a room or space in which there is an open or semi-open discharge from a Level 3 vacuum or scavenging system

5.3.3.5.7.2 Air sources for a compressor(s) located outside the building shall be drawn from locations where no contamination from vacuum or scavenging system discharges or particulate matter is anticipated.

5.3.3.5.8* Cylinder Gas Reserves/Supplements to Compressor Sources.

5.3.3.5.8.1 When used, cylinder reserves/supplements for compressor sources shall be a system of cylinders and necessary supply equipment that will permit supplying the required supply gas as an alternative to the compressor supplied air.

5.3.3.5.8.2 When the content of one primary cylinder is unable to supply the normal operating pressures, the secondary cylinder(s) shall be activated manually or automatically.

5.3.3.5.8.3 When used, cylinder gas reserves/supplements to compressor sources shall be piped into the system through a check valve and shutoff valve located in each supply line prior to the tee connection to the main line.

5.3.3.5.8.4 The designed operating pressure shall be below a gauge pressure of 1100 kPa (160 psi).

5.3.3.5.8.5 Reserves/supplements to compressor source systems shall either have regulator(s) mounted on the individual cylinder(s) or the cylinder(s) may be connected to a manifold via pigtail with pressure regulated at the manifold.

5.3.3.5.8.6* When nitrogen is used as the gas in a reserves/supplement to a compressor source, the following shall be permitted to apply:

(1) The volume of nitrogen connected and in storage shall not be considered in the limit of 84,950 L (3000 ft^3) of medical gases (i.e., oxygen and nitrous oxide) for classification as Level 3 and the ventilation of enclosures.
(2) Nitrogen gas cylinders shall be permitted to be stored in compressor rooms.
(3) The gas used shall be oil-free, dry Nitrogen NF.

5.3.3.6* Level 3 Vacuum Sources.

5.3.3.6.1 Level 3 vacuum sources shall be obtained from and be installed under the supervision of a manufacturer(s) or supplier(s) familiar with its installation and use.

5.3.3.6.2 Level 3 vacuum sources shall include the following:

(1) Pump or pumps suited for wet or dry service as intended in the design
(2) If intended for wet service, a liquid/air separator

5.3.3.6.3* Drains. None of the following provisions are intended to supersede provisions of local codes.

5.3.3.6.3.1 Liquids drained from a Level 3 vacuum source shall be directly connected to a sanitary drainage system through a trapped and vented drain.

--`,,```,,,,````-`-`,,`,,`,`,,`---

Copyright National Fire Protection Association
Provided by IHS under license with NFPA
No reproduction or networking permitted without license from IHS
Not for Resale

5.3.3.6.3.2 Where the drainage is from a waste holding tank on the suction side of the vacuum source, the following requirements shall be met:

(1) A check valve shall be installed in the drain line from the holding tank.
(2) The trap in the building drainage system shall be the deep-seal type that is conventionally vented within the plumbing system.
(3) An additional vent shall be installed between the holding tank drain check valve and the drain trap, on the inlet side of the trap, to close and seal the check valve while the holding tank is operating under vacuum and collecting waste.
(4) The additional vent described in 5.3.3.6.3.2(3) shall be permitted to be connected to the plumbing system vents.
(5) Both of the vents in 5.3.3.6.3.2(3) and 5.3.3.6.3.2(4) shall extend vertically to not less than 152 mm (6 in.) above the top of the holding tank before turning horizontal.
(6) The trap and drain branch shall be not less than two pipe sizes larger than the waste pipe from the separator, but not less than DN50 (NPS 2).
(7) The trap seal shall be not less than 100 mm (4 in.) deep.
(8) The vent for the vacuum check valve shall be not less than the size of the check valve.
(9) The vent for the trap shall be not less than one-half the size of the trap and drain branch.

5.3.3.6.3.3 Where the drainage is at a positive pressure from an air/waste separator on the discharge side of the vacuum source, the following requirements shall be met:

(1) The trap in the building drainage system shall be the deep-seal type that is conventionally vented within the plumbing system.
(2) The trap vent shall extend vertically to not less than 152 mm (6 in.) above the top of the separator before turning horizontal.
(3) The trap and drain branch shall be not less than two pipe sizes larger than the waste pipe from the separator, but not less than DN40 (NPS 1½).
(4) The vent shall be the full size of the trap and drain.
(5) The trap seal shall be at least two times the exhaust back pressure in the separator, but not less than 100 mm (4 in.) deep.

5.3.3.6.4 Exhausts.

5.3.3.6.4.1 The gas discharge from a Level 3 vacuum source shall be piped to the outside.

5.3.3.6.4.2 The discharge point shall be chosen to minimize the hazards of noise.

5.3.3.6.4.3 The discharge point shall be located remote from any door, window, or other opening in the building.

5.3.3.6.4.4 The discharge point shall be located at a different level than air intakes.

5.3.3.6.4.5 The discharge point shall not be located where affected by prevailing winds, adjacent buildings, topography, or other obstacles to the rapid dispersion of the exhaust gases.

5.3.3.6.4.6 The discharge point shall be protected against the entry of insects, vermin, debris, and precipitation.

5.3.3.6.4.7 The discharge piping shall be sized to prevent back pressure greater than the pump manufacturer's recommendations.

5.3.3.6.4.8* Where multiple pumps discharge through a common pipe, each pump shall be fitted with a check valve, a manual isolation valve, or shall be arranged to permit capping the individual pump exhausts when a pump is removed for service.

5.3.3.6.4.9 Where multiple pumps discharge through a common pipe, piping shall be arranged following the pump manufacturer's recommendations.

5.3.4* Level 3 Valves.

5.3.4.1 Emergency Shutoff Valves.

5.3.4.1.1 Where the central supply is remote from the medical gas system use points, the main supply line shall be provided with a shutoff valve so located in the single treatment facility as to be accessible from use-point locations in an emergency.

5.3.4.1.2 Where the supply is remote from a single treatment facility, the main supply line shall be provided with a shutoff valve so located in the single treatment facility as to be accessible from use-point locations in an emergency. Such valves shall be labeled to indicate the gas controlled and shall shut off only the gas to that single treatment facility. A remotely activated shutoff at the supply cylinder shall not be used for emergency shutoff. For clinical purposes, such a remote actuator shall not fail-close in the event of a loss of electric power. If remote actuators are the type that fail-open, it shall be mandatory that cylinder shutoff valves be closed whenever the system is not in use.

5.3.4.1.3 Where the central supply system supplies two single treatment facilities, each facility shall be provided with a shutoff valve so located in each treatment facility as to be accessible from the use-point locations in an emergency. Such valves shall be labeled to indicate the gas controlled and shall shut off only the gas to that single treatment facility. A remotely activated shutoff at the supply manifold shall not be used for emergency shutoff valves for dual treatment facility installations. For clinical purposes, such a remote actuator shall not fail-close in the event of a loss of electric power. If remote actuators are the type that fail-open, it shall be mandatory that cylinder shutoff valves be closed whenever the system is not in use.

5.3.4.1.4 Each riser supplied from the main line shall be provided with a shutoff valve adjacent to the riser connection. Riser valves shall remain accessible and shall not be obstructed.

5.3.5* Station and Service Inlets and Outlets.

5.3.5.1 Factory installed tubes on station outlets used for medical gases (i.e., oxygen and nitrous oxide) extending no more than 205 mm (8 in.) from the body of the terminal shall be not less than DN8 (NPS ¼) (⅜ in. O.D.) size with 8 mm (0.3 in.) minimum inside diameter.

5.3.5.2* The service outlet/inlet for Level 3 medical gas (i.e., oxygen and nitrous oxide) shall not be interchangeable with other service outlets/inlets [e.g., source for gas-powered devices (i.e., air or nitrogen), vacuum, or water].

5.3.5.3 The service inlet for Level 3 vacuum shall be permitted to be either a shutoff valve with a threaded female pipe connector or a quick-connect fitting with a single check valve.

5.3.6 Level 3 Manufactured Assemblies. (Reserved)

5.3.7 Level 3 Surface Mounted Medical Gas Rails. (Reserved)

5.3.8 Level 3 Pressure and Vacuum Indicators. (Reserved)

5.3.9 Level 3 Warning Systems.

5.3.9.1 Warning systems for medical gases (i.e., oxygen and nitrous oxide) in Level 3 facilities shall conform to the alarm functions of a Level 1 facility as required in 5.1.9, except as follows:

Copyright National Fire Protection Association
Provided by IHS under license with NFPA
No reproduction or networking permitted without license from IHS
Not for Resale

(1) Area and local alarms shall not be required.
(2) Warning systems shall be permitted to have a single alarm panel.
(3) The alarm panel shall be located in an area of continuous surveillance while the facility is in operation.
(4) Pressure switches/sensors that monitor main line pressure shall be mounted at the source equipment with a pressure indicator(s) (lamp or LED) at the alarm panel. The audible and noncancelable alarm visual signals shall indicate if the pressure in the main line increases or decreases 20 percent from the normal operating pressure. Visual indicators shall remain until the situation that caused the alarm is resolved.
(5) When automatic changeover of source gases is required, the changeover alarm shall have a secondary indicator to suit the arrangement of the source equipment.
(6) A cancelable audible indication of each alarm condition that produces a sound at the alarm panel shall re-initiate the audible signal if another alarm condition occurs while the audible is silenced.
(7) Pressure switches/senses shall be installed downstream from any emergency shutoff valves required by 5.3.4.1 and shall comply with 5.3.9.1(4) and 5.3.9.1(5)

5.3.9.2 Systems for gases such as compressed air or nitrogen used to power devices, as well as Level 3 vacuum systems, shall not be required to have warning systems.

5.3.10 Level 3 Distribution.

5.3.10.1 Piping Materials for Field-Installed Level 3 Positive-Pressure Gas Systems.

5.3.10.1.1 Piping for Medical Gases. Piping for Level 3 positive-pressure nonflammable medical gases (i.e., oxygen and nitrous oxide) shall meet the requirements in 5.3.10.1.1.1 through 5.3.10.1.1.5.

5.3.10.1.1.1 Tubes, valves, fittings, station outlets, and other piping components in medical gas systems shall have been cleaned for oxygen service by the manufacturer prior to installation in accordance with CGA G-4.1 *Cleaning Equipment for Oxygen Service*.

5.3.10.1.1.2 Each length of tube shall be delivered plugged or capped by the manufacturer and kept sealed until prepared for installation.

5.3.10.1.1.3 Fittings, valves, and other components shall be delivered sealed and labeled by the manufacturer and kept sealed until prepared for installation.

5.3.10.1.1.4 Tubes shall be hard-drawn seamless copper ASTM B 819, *Standard Specification for Seamless Copper Tube for Medical Gas Systems*, medical gas tube, Type L or K.

5.3.10.1.1.5 ASTM B 819, *Standard Specification for Seamless Copper Tube for Medical Gas Systems*, medical gas tube shall be identified by the manufacturer's markings "OXY," "MED," "OXY/MED," "OXY/ACR," or "ACR/MED" in blue (Type L) or green (Type K).

5.3.10.1.2 Piping for Level 3 Gas-Powered Devices. Tubes shall be hard-drawn seamless copper and one of the following:

(1) ASTM B 819, *Standard Specification for Seamless Copper Tube for Medical Gas Systems*, medical gas tube (Type K or L)
(2) ASTM B 88, *Standard Specification for Seamless Copper Water Tube*, water tube (Type K or L)
(3) ASTM B 280, *Standard Specification for Seamless Copper Tubing for Air Conditioning and Refrigeration Field Service*, ACR tube (O.D. size), except that tube installed underground or within floor slabs shall be permitted to be soft annealed temper.

5.3.10.2 Piping Materials for Field-Installed Level 3 Vacuum Systems.

5.3.10.2.1 In copper piping systems, the tubes shall be hard-drawn seamless copper and one of the following:

(1) ASTM B 819, *Standard Specification for Seamless Copper Tube for Medical Gas Systems*, medical gas tube (Type K or L)
(2) ASTM B 88, *Standard Specification for Seamless Copper Water Tube*, water tube (Type K, L, or M)
(3) ASTM B 280, *Standard Specification for Seamless Copper Tubing for Air Conditioning and Refrigeration Field Service*, ACR tube (O.D. size), except that tube installed underground or within floor slabs shall be permitted to be soft annealed temper.

5.3.10.2.2 Copper tube installed underground or within floor slabs shall be permitted to be soft annealed temper.

5.3.10.2.3 In plastic piping systems, the pipe shall be polyvinylchoride (PVC) plastic, Schedule 40 minimum.

5.3.10.3 Fittings.

5.3.10.3.1 Turns, offsets, and other changes in direction in medical gas piping, copper Level 3 vacuum piping, and piping for gas-powered devices shall be made with brazed wrought copper capillary fittings complying with ASME B16.22, *Wrought Copper and Copper Alloy Solder-Joint Pressure Fittings*, or brazing fittings complying with ASME B16.50, *Wrought Copper and Copper Alloy Braze-Joint Pressure Fittings*.

5.3.10.3.2 Cast copper alloy fittings shall not be used where joints are brazed.

5.3.10.3.3 Branch connections in copper vacuum piping systems shall be permitted to be made using mechanically formed, drilled, and extruded tee-branch connections that are formed in accordance with the tool manufacturer's instructions, and brazed.

5.3.10.3.4 Turns, offsets, and other changes in direction in plastic Level 3 vacuum piping shall be made with solvent-cemented PVC plastic pressure fittings, Schedule 40 minimum.

5.3.10.4 Threaded Joints. Threaded joints in Level 3 gas-powered systems and vacuum distribution piping shall meet the following requirements:

(1) Be limited to connections to pressure/vacuum indicators, alarm devices, and source equipment
(2) Have tapered threads complying with ASME B1.20.1, *Pipe Threads, General Purpose, Inch*
(3) Be made up with polytetrafluoroethylene (such as Teflon™) tape or other thread sealant recommended for oxygen service, with the sealant applied to the male threads only

5.3.10.5 Soldered Joints. Soldered joints in copper Level 3 vacuum and Level 3 gas-powered systems piping shall be made in accordance with ASTM B 828, *Standard Practice for Making Capillary Joints by Soldering of Copper and Copper Alloy Tube and Fittings*, using a "lead-free" solder filler metal containing not more than 0.2 percent lead by volume.

5.3.10.6 Solvent-Cemented Joints. Solvent-cemented joints in plastic Level 3 vacuum piping shall be in accordance with

--`,,```,,,,````-`-`,,`,,`,`,,`---
Copyright National Fire Protection Association
Provided by IHS under license with NFPA
No reproduction or networking permitted without license from IHS
Not for Resale

ASTM D 2855, *Standard Practice for Making Solvent-Cemented Joints with Poly(Vinyl Chloride) (PVC) Pipe and Fittings*.

5.3.10.7 Brazed Joints.

5.3.10.7.1 General Requirements.

5.3.10.7.1.1 Brazed joints shall be made using a brazing alloy that exhibits a melting temperature in excess of 538°C (1000°F) to retain the integrity of the piping system in the event of fire exposure.

5.3.10.7.1.2 Brazed tube joints shall be the socket type.

5.3.10.7.1.3 Filler metals shall bond with and be metallurgically compatible with the base metals being joined.

5.3.10.7.1.4 Filler metals shall comply with ANSI/AWS A5.8, *Specification for Filler Metals for Brazing and Braze Welding*.

5.3.10.7.1.5 Copper-to-copper joints shall be brazed using a copper–phosphorus or copper–phosphorus–silver brazing filler metal (BCuP series) without flux.

5.3.10.7.1.6 Joints to be brazed in place shall be accessible for necessary preparation, assembly, heating, filler application, cooling, cleaning, and inspection.

5.3.10.7.2 Cutting Tube Ends.

5.3.10.7.2.1 Tube ends shall be cut square using a sharp tubing cutter to avoid deforming the tube.

5.3.10.7.2.2 The cutting wheels on tubing cutters shall be free from grease, oil, or other lubricant not recommended for oxygen service.

5.3.10.7.2.3 The cut ends of the tube shall be deburred with a sharp, clean deburring tool, taking care to prevent chips from entering the tube.

5.3.10.7.3 Cleaning Joints for Brazing.

5.3.10.7.3.1 The interior surfaces of tubes, fittings, and other components that are cleaned for oxygen service shall be stored and handled to avoid contamination prior to assembly and brazing.

5.3.10.7.3.2 The exterior surfaces of tube ends shall be cleaned prior to brazing to remove any oxides and surface dirt and to roughen the surfaces to prepare them for brazing.

5.3.10.7.3.3 If the interior surfaces of fitting sockets that were cleaned for oxygen become contaminated prior to brazing, they shall be re-cleaned for oxygen in accordance with 5.3.10.7.3.9 and be cleaned for brazing with a clean, oil-free wire brush.

5.3.10.7.3.4 Nonabrasive pads shall be used to clean the exterior surfaces of tube ends.

5.3.10.7.3.5 The use of steel wool or sand cloth shall be prohibited.

5.3.10.7.3.6 The cleaning process shall not result in grooving of the surfaces to be joined.

5.3.10.7.3.7 After being abraded, the surfaces shall be wiped using a clean, lint-free white cloth.

5.3.10.7.3.8 Tubes, fittings, valves, and other components shall be visually examined internally before being joined to verify that they have not become contaminated for oxygen service (if so required) and that they are free of obstructions or debris.

5.3.10.7.3.9 The interior surfaces of tube ends, fittings, and other components that were cleaned for oxygen service by the manufacturer, but become contaminated prior to being installed, shall be permitted to be re-cleaned on-site by the installer by thoroughly scrubbing the interior surfaces with a clean, hot water/alkaline solution, such as sodium carbonate or trisodium phosphate, mixed 450 g to 11 L (1 lb to 3 gal) of potable water and thoroughly rinsing them with clean, hot potable water.

5.3.10.7.3.10 Other aqueous cleaning solutions shall be permitted to be used for the on-site re-cleaning permitted in 5.3.10.7.3.9, provided that they are as recommended in CGA G-4.1, *Cleaning Equipment for Oxygen Service*, and are listed in CGA O2-DIR, *Directory of Cleaning Agents for Oxygen Service*.

5.3.10.7.3.11 Material that has become contaminated internally and is not clean for oxygen service (if so required) shall not be installed.

5.3.10.7.3.12 Joints shall be brazed within 1 hour after the surfaces are cleaned for brazing.

5.3.10.7.4 Brazing Dissimilar Metals.

5.3.10.7.4.1 Flux shall only be used when brazing dissimilar metals, such as copper and bronze or brass, using a silver (BAg series) brazing filler metal.

5.3.10.7.4.2 Surfaces shall be cleaned for brazing in accordance with 5.3.10.7.3.

5.3.10.7.4.3 Flux shall be applied sparingly to minimize contamination of the inside of the tube with flux.

5.3.10.7.4.4 The flux shall be applied and worked over the cleaned surfaces to be brazed using a stiff, stainless steel bristle brush to ensure complete coverage and wetting of the surfaces with flux.

5.3.10.7.4.5 Where possible, short sections of copper tube shall be brazed onto the noncopper component and the interior of the subassembly shall be cleaned of flux prior to installation in the piping system.

5.3.10.7.4.6 On joints DN20 (NPS ¾) (⅞ in. O.D.) size and smaller, flux-coated brazing rods shall be permitted to be used in lieu of applying flux to the surfaces being joined.

5.3.10.7.5* Nitrogen Purge.

5.3.10.7.5.1 While being brazed, joints shall be continuously purged with oil-free, dry Nitrogen NF to prevent the formation of copper oxide on the inside surfaces of the joint.

5.3.10.7.5.2 The source of the purge gas shall be monitored and the installer shall be audibly alerted when the content is low.

5.3.10.7.5.3 The purge gas flow rate shall not produce a positive pressure in the piping system.

5.3.10.7.5.4 The purge gas flow rate shall be controlled by the use of a pressure regulator and flowmeter, or combination thereof.

5.3.10.7.5.5 Pressure regulators alone shall not be used to control purge gas flow rates.

5.3.10.7.5.6 During and after installation, openings in the piping system shall be kept capped or plugged to maintain a nitrogen atmosphere within the piping and to prevent debris or other contaminants from entering the system.

Copyright National Fire Protection Association
Provided by IHS under license with NFPA
No reproduction or networking permitted without license from IHS
Not for Resale

5.3.10.7.5.7 While a joint is being brazed, a discharge opening shall be provided on the opposite side of the joint from where the purge gas is being introduced.

5.3.10.7.5.8 The flow of purge gas shall be maintained until the joint is cool to the touch.

5.3.10.7.5.9 After the joint has cooled, the purge discharge opening shall be plugged or capped to prevent contamination of the inside of the tube and maintain the nitrogen atmosphere within the piping system.

5.3.10.7.5.10 The final connection of new piping to an existing in-use pipeline shall be permitted to be made without the use of a nitrogen purge.

5.3.10.7.5.11 After a final connection in a Level 3 positive-pressure gas pipeline is made without a nitrogen purge, an outlet in the immediate downstream zone of the affected portion(s) of both the new and existing in-use piping shall be tested in accordance with 5.3.12.3.8, Verifier Final Tie-In Test.

5.3.10.7.6 Assembling and Heating Joints.

5.3.10.7.6.1 Tube ends shall be inserted fully into the socket of the fitting.

5.3.10.7.6.2 Where flux is permitted, the joint shall be heated slowly until the flux has liquefied.

5.3.10.7.6.3 After flux is liquefied, or where flux is not permitted to be used, the joint shall be heated quickly to the brazing temperature, taking care not to overheat the joint.

5.3.10.7.6.4 Techniques for heating the joint; applying the brazing filler metal; and making horizontal, vertical, and large-diameter joints shall be as stated in sections on Applying Heat and Brazing and Horizontal and Vertical Joints in Chapter VII, Brazed Joints in the CDA *Copper Tube Handbook*.

5.3.10.7.7 Inspection of Brazed or Soldered Joints.

5.3.10.7.7.1 After brazing or soldering, the outside of all joints shall be cleaned by washing with water and a wire brush to remove any residue and permit clear visual inspection of the joint.

5.3.10.7.7.2 Where flux has been used, the wash water shall be hot.

5.3.10.7.7.3 Each joint shall be visually inspected after cleaning the outside surfaces.

5.3.10.7.7.4 Joints exhibiting the following conditions shall not be permitted:

(1) Flux or flux residue (when flux or flux-coated BAg rods are used with dissimilar metals)
(2) Base metal melting or erosion
(3) Unmelted filler metal
(4) Failure of the filler metal to be clearly visible all the way around the joint at the interface between the socket and the tube
(5) Cracks in the tube or component
(6) Cracks in the braze or solder filler metal
(7) Failure of the joint to hold the test pressure or vacuum under the installer-performed initial pressure or vacuum test (5.3.12.2.3 or 5.3.12.2.4) and standing pressure or vacuum test (5.3.12.2.7 or 5.3.12.2.8).

5.3.10.7.7.5 Joints that are identified as defective under conditions 5.3.10.7.7.4(2) or 5.3.10.7.7.4(5) shall be replaced.

5.3.10.7.7.6 Joints that are found to be defective under conditions 5.3.10.7.7.4(1), 5.3.10.7.7.4(3), 5.3.10.7.7.4(4), 5.3.10.7.7.4(6), or 5.3.10.7.7.4(7) shall be permitted to be repaired, except that no joint shall be reheated more than once before being replaced.

5.3.10.8 Special Joints.

5.3.10.8.1 The following joints shall be prohibited throughout Level 3 medical gas (i.e., oxygen and nitrous oxide) pipeline systems:

(1) Flared and compression connections, including connections to station outlets and inlets, alarm devices, and other components
(2) Other straight-threaded connections, including unions

5.3.10.8.2 Flared and compression connections shall be permitted in piping for Level 3 gas-powered devices and Level 3 vacuum in junction boxes, and where exposed at station outlets/inlets and source equipment.

5.3.10.9 Special Fittings. The following special fittings shall be permitted to be used in lieu of brazed joints:

(1) Memory-metal couplings having temperature and pressure ratings joints not less than that of a brazed joint
(2) Listed or approved metallic gas tube fittings that, when made up, provide a permanent joint having the mechanical, thermal, and sealing integrity of a brazed joint
(3) Axially swaged, elastic strain preload fittings providing metal to metal seal having pressure and temperature ratings not less than that of a brazed joint and when complete are permanent and nonseparable.

5.3.10.10 Installation of Level 3 Piping and Equipment.

5.3.10.10.1 Qualification of Installers.

5.3.10.10.1.1 The installation of Level 3 gas and vacuum systems shall be made by qualified, competent technicians who are experienced in making such installations.

5.3.10.10.1.2 The installers of Level 3 medical gas systems (i.e., oxygen and nitrous oxide) shall be qualified under the requirements of ASSE 6010, *Professional Qualifications Standard for Medical Gas Systems Installers*.

5.3.10.10.1.3 Brazing on medical gas system pipelines shall be performed by individuals who are qualified under the provisions of 5.3.10.10.15.

5.3.10.10.1.4 Prior to any installation work involving brazing, the installer of Level 3 medical gas piping shall provide documentation for the qualification of brazing procedures and individual brazers that is required under 5.3.10.10.15.

5.3.10.10.2 Pipe Sizing. Piping systems shall be designed and sized to deliver the required flow rates at the utilization pressures.

5.3.10.10.3* Minimum Pipe Sizes.

5.3.10.10.3.1 Mains, branches, and drops to individual service outlets in Level 3 oxygen piping systems shall be not less than DN10 (NPS ⅜ in.) (½ in. O.D.) size, but at least one size larger than the piping for nitrous oxide.

5.3.10.10.3.2 Mains, branches, and drops to individual service outlets in Level 3 nitrous oxide and inlets in the following piping systems shall be not less than DN8 (NPS ¼ in.) (⅜ in. O.D.) size.

--`,,```,,,,````-`-`,,`,,`,`,,`---
Copyright National Fire Protection Association
Provided by IHS under license with NFPA
No reproduction or networking permitted without license from IHS
Not for Resale

5.3.10.10.3.3 Mains, branches, and drops to individual service outlets/inlets in Level 3 piping systems for gas powered devices and vacuum shall not be the same as the sizes used for oxygen and nitrous oxide.

5.3.10.10.3.4 Runouts to alarm panels and connecting tubing for pressure/vacuum indicators and alarm devices shall be permitted to be DN8 (NPS ⅛) (¼ in. O.D.) size.

5.3.10.10.4 Protection of Piping. Piping shall be protected against freezing, corrosion, and physical damage.

5.3.10.10.4.1 Piping exposed in corridors and other areas where subject to physical damage from the movement of carts, stretchers, portable equipment, or vehicles shall be protected.

5.3.10.10.4.2 Tubing for Level 3 medical gas (i.e., oxygen and nitrous oxide) tubing that is underground within buildings or embedded in concrete floors or walls shall be installed in a continuous conduit.

5.3.10.10.5 Location of Piping.

5.3.10.10.5.1 Piping for Level 3 medical gases (i.e., oxygen and nitrous oxide) shall be located in accordance with 5.3.10.10.5.1(A) through 5.3.10.10.5.1(C):

(A) Piping shall be permitted to be installed overhead wherever possible.

(B) Piping shall not be installed in electrical switchgear rooms, elevator shafts, and areas having open flames.

(C) Medical gas piping (i.e., oxygen and nitrous oxide) shall not be located where subject to contact with oil.

5.3.10.10.5.2 Piping for Level 3 gas-powered devices, and Level 3 vacuum systems shall be located in accordance with 5.3.10.10.5.2(A) and 5.3.10.10.5.2(B):

(A) Piping shall be permitted to be installed at the following locations:

(1) Under floor or underground
(2) Underground within buildings
(3) Aboveground, within walls, within ceilings

(B) Piping shall not be installed in electrical switchgear rooms, elevator shafts, and areas having open flames, except for the following locations:

(1) Room locations for Level 3 gas-powered devices and Level 3 vacuum systems.
(2) Room locations for secondary distribution circuit panels and breakers having a maximum voltage rating of 600 volts.

5.3.10.10.6 Pipe Support.

5.3.10.10.6.1 Piping shall be supported from the building structure in accordance with MSS SP-69, *Pipe Hangers and Supports — Selection and Application.*

5.3.10.10.6.2 Hangers and supports shall comply with MSS SP-58, *Pipe Hangers and Supports — Materials, Design, and Manufacture.*

5.3.10.10.6.3 Hangers for copper tube shall be sized for copper tube and have a copper finish.

5.3.10.10.6.4 In potentially damp locations, copper tube hangers and supports that are in contact with the tube shall be plastic-coated or otherwise be electrically insulated from the tube.

5.3.10.10.6.5 Maximum support spacing for copper tubing shall be in accordance with Table 5.3.10.10.6.5.

Table 5.3.10.10.6.5 Maximum Pipe Support Spacing

Pipe Size	Hanger Spacing mm	Hanger Spacing ft
DN8 (NPS ¼) (⅜ in. O.D.)	1520	5
DN10 (NPS ⅜) (½ in. O.D.)	1830	6
DN15 (NPS ½) (⅝ in. O.D.)	1830	6
DN20 (NPS ¾) (⅞ in. O.D.)	2130	7
DN25 (NPS 1) (1⅛ in. O.D.)	2440	8
DN 32 (NPS 1¼) (1⅜ in. O.D.)	2740	9
DN40 (NPS 1½) (1⅝ in. O.D.) and larger	3050	10
Vertical risers, all sizes Every floor, but not to exceed:	4570	15

5.3.10.10.6.6 PVC plastic piping for Level 3 vacuum systems shall be supported at a maximum spacing of 1.22 m (4 ft), except that vertical piping shall be supported at every floor and with mid-story guides.

5.3.10.10.6.7 Where required, Level 3 gas and vacuum piping shall be seismically restrained against earthquakes in accordance with the applicable building code.

5.3.10.10.7 Piping Within Floor Slabs and Underground Within Buildings.

5.3.10.10.7.1 The tube(s) shall be installed in one (or more) continuous conduits that are of sufficient size to permit subsequent installation, removal, and replacement of the gas and/or vacuum lines.

5.3.10.10.7.2 Each tube pulled into the conduit shall be a continuous length having no joints within the conduit.

5.3.10.10.8 Underground Piping Outside of Buildings.

5.3.10.10.8.1 Buried piping outside of buildings shall be installed below the local level of frost penetration.

5.3.10.10.8.2 The installation procedure for underground piping shall protect the piping from physical damage while being backfilled.

5.3.10.10.8.3 If underground piping is protected by a conduit, cover, or other enclosure, the following requirements shall be met:

(1) Access during construction shall be provided at the joints for visual inspection and leak testing.
(2) The conduit, cover, or enclosure shall be self-draining and not retain groundwater in prolonged contact with the pipe.

5.3.10.10.8.4 Buried piping that will be subject to surface loads shall be buried at a depth that will protect the piping and or its enclosure from excessive stresses.

5.3.10.10.8.5 The minimum backfilled cover above the top of the pipe or its enclosure for buried piping outside of buildings shall be 900 mm (36 in.), except that the minimum cover shall be permitted to be reduced to 450 mm (18 in.) where physical damage is otherwise prevented.

5.3.10.10.8.6 Trenches shall be excavated so that the pipe or its enclosure has firm, substantially continuous bearing on the bottom of the trench.

Copyright National Fire Protection Association
Provided by IHS under license with NFPA
No reproduction or networking permitted without license from IHS
Not for Resale

5.3.10.10.8.7 Backfill shall be clean and compacted so as to protect and uniformly support the pipe or its enclosure.

5.3.10.10.8.8 A continuous tape or marker placed immediately above the pipe or its enclosure shall clearly identify the pipeline by specific name.

5.3.10.10.8.9 A continuous warning means shall also be provided above the pipeline at approximately one-half the depth of bury.

5.3.10.10.8.10 Where buried piping is installed through a wall sleeve, the ends of the sleeve shall be sealed to prevent the entrance of ground water into the building.

5.3.10.10.9 Branch Takeoffs. Runouts from horizontal piping for medical gas (i.e., oxygen and nitrous oxide) shall be taken off above the centerline of the main or branch pipe and rise vertically at an angle of not more than 45 degrees from vertical.

5.3.10.10.10 Special Requirements for Level 3 Vacuum Piping.

5.3.10.10.10.1 Horizontal piping in Level 3 vacuum systems shall be sloped a minimum of 7 mm per 3.05 m (¼ in. per 10 ft) toward the vacuum source equipment.

5.3.10.10.10.2 Horizontal piping shall include no sags or low points that will permit fluids or debris to accumulate.

5.3.10.10.10.3 Accessible cleanouts that are limited to vertical downflow shall be provided where necessary to clear the piping of obstructions.

5.3.10.10.11 Hose and Flexible Connectors.

5.3.10.10.11.1 Hose and flexible connectors, both metallic and nonmetallic, shall be no longer than necessary and shall not penetrate or be concealed in walls, floors, ceilings, or partitions.

5.3.10.10.11.2 Flexible connectors, metallic or nonmetallic, shall have a minimum burst pressure, with a gauge pressure of 6895 kPa (1000 psi).

5.3.10.10.12 Prohibited System Interconnections.

5.3.10.10.12.1 Two or more piping systems for medical gases, gas-powered devices, and Level 3 vacuum shall not be interconnected for testing or any other reason.

5.3.10.10.12.2 Leak testing shall be accomplished by separately charging and testing each individual piping system.

5.3.10.10.13 System Manufacturer's Instructions.

5.3.10.10.13.1 The installation of individual components shall be made in accordance with the instructions of the system manufacturer.

5.3.10.10.13.2 Such instructions shall include directions and information deemed by the system manufacturer to be necessary for attaining proper operation, testing, and maintenance of the system.

5.3.10.10.13.3 Copies of system manufacturer's instructions shall be left with the system owner.

5.3.10.10.14 Changes in System Use.

5.3.10.10.14.1 Where a Level 3 positive-pressure gas piping distribution system originally used or constructed for use at one pressure or for one gas is converted for operation at another pressure or for another gas, all provisions of 5.3.10 shall apply as if the system were new.

5.3.10.10.14.2 Piping for Level 3 gas-powered devices or Level 3 vacuum shall not be permitted to be converted for use as a medical gas piping system (i.e., oxygen or nitrous oxide).

5.3.10.10.15 Qualification of Brazing Procedures and Brazing.

5.3.10.10.15.1 Brazing procedures and brazer performance for the installation of Level 3 brazed piping shall be qualified the same as for Level 1 piping, in accordance with either Section IX, Welding and Brazing Qualifications, of the ASME *Boiler and Pressure Vessel Code*, or AWS B2.2, *Standard for Brazing Procedure and Performance Qualification*, both as modified by 5.3.10.10.15.2 through 5.3.10.10.15.5.

5.3.10.10.15.2 Brazers shall be qualified by visual examination of the test coupon followed by sectioning.

5.3.10.10.15.3 The brazing procedure specification shall address cleaning, joint clearance, overlap, internal purge gas, purge gas flow rate, and filler metal.

5.3.10.10.15.4 The brazing procedure qualification record and the record of brazer performance qualification shall document filler metal used, cleaning, joint clearance, overlap, internal purge gas and flow rate during brazing of coupon, and the absence of internal oxidation in the completed coupon.

5.3.10.10.15.5 Brazing procedures qualified by a technically competent group or agency shall be permitted under the following conditions:

(1) The brazing procedure specification and the procedure qualification record meet the requirements of this standard.
(2) The employer obtains a copy of both the brazing procedure specification and the supporting qualification records from the group or agency and signs and dates these records, thereby accepting responsibility for the qualifications that were performed by the group or agency.
(3) The employer qualifies at least one brazer following each brazing procedure specification used.

5.3.10.10.15.6 An employer shall be permitted to accept brazer qualification records of a previous employer under the following conditions:

(1) The brazer has been qualified following the same or an equivalent procedure that the new employer uses.
(2) The new employer obtains a copy of the record of brazer performance qualification tests from the previous employer and signs and dates these records, thereby accepting responsibility for the qualifications performed by the previous employer.

5.3.10.10.15.7 Performance qualifications of brazers shall remain in effect indefinitely unless the brazer does not braze with the qualified procedure for a period exceeding 6 months, or there is a specific reason to question the ability of the brazer.

5.3.11 Labeling and Identification.

5.3.11.1 Pipe Labeling.

5.3.11.1.1 Piping shall be labeled by stenciling or adhesive markers that identify the system.

5.3.11.1.2 Pipe labels shall show the name of the gas/vacuum system or the chemical symbol.

5.3.11.1.3 Where positive-pressure gas piping systems operate at pressures other than the standard gauge pressure of 345 kPa to 380 kPa (50 psi to 55 psi) or gauge pressure of 1100 kPa

Copyright National Fire Protection Association
Provided by IHS under license with NFPA
No reproduction or networking permitted without license from IHS
Not for Resale

to 1275 kPa (160 psi to 185 psi) for nitrogen, the pipe labels shall include the nonstandard operating pressure in addition to the name or symbol of the gas.

5.3.11.1.4 Pipe labels shall be located as follows:

(1) At intervals of not more than 6.1 m (20 ft)
(2) At least once in or above every room
(3) On both sides of walls or partitions penetrated by the piping
(4) At least once in every story height traversed by risers

5.3.11.2 Shutoff Valves.

5.3.11.2.1 Shutoff valves shall be identified as to the following:

(1) The name or chemical symbol for the specific system
(2) The name of the room(s) or area(s) served
(3) A caution to not close (or open) the valve except in an emergency

5.3.11.2.2 Where positive-pressure gas systems operate at pressures other than the standard gauge pressure of 345 kPa to 380 kPa (50 psi to 55 psi) or gauge pressure of 1100 kPa to 1275 kPa (160 psi to 185 psi) for nitrogen, the valve identification shall also include the nonstandard operating pressure.

5.3.11.3 Service Outlets and Inlets.

5.3.11.3.1 Service outlets and inlets shall be identified as to the name or chemical symbol for the specific gas or vacuum provided.

5.3.11.3.2 Where positive-pressure gas systems operate at pressures other than the standard gauge pressure of 345 kPa to 380 kPa (50 psi to 55 psi) or gauge pressure of 1100 kPa to 1275 kPa (160 psi to 185 psi) for nitrogen, the station outlet identification shall include the nonstandard operating pressure.

5.3.12 Performance Criteria and Testing — Level 3 (Medical Gas, Gas-Powered Devices, Vacuum).

5.3.12.1 General.

5.3.12.1.1 Inspection and testing shall be performed on all new piped gas systems, additions, renovations, temporary installations, or repaired systems, to assure the facility, by a documented procedure, that all applicable provisions of this document have been adhered to and system integrity has been achieved or maintained.

5.3.12.1.2 Inspection and testing shall include all components of the system or portions thereof including, but not limited to, medical gas source(s), compressed air source systems (e.g., compressors, dryers, filters, regulators), alarms and monitoring safeguards, pipelines, isolation valves, and service outlets and inlets.

5.3.12.1.3 All systems that are breached and components that are subjected to additions, renovations, or replacement (e.g., new medical gas sources, compressors, dryers, alarms) shall be inspected and tested.

5.3.12.1.4 Systems shall be deemed breached at the point of pipeline intrusion by physical separation or by system component removal, replacement, or addition.

5.3.12.1.5 Breached portions of the systems subject to inspection and testing shall be confined to only the specific altered zone and components in the immediate zone or area that is located upstream for vacuum systems and downstream for pressure gases at the point or area of intrusion.

5.3.12.1.6 The inspection and testing reports shall be submitted directly to the party that contracted for the testing, who shall submit the report through channels to the responsible authority and any others that are required.

5.3.12.1.7 Reports shall contain detailed listings of all findings and results.

5.3.12.1.8 The responsible facility authority shall review these inspection and testing records prior to the use of any systems to assure that all findings and results of the inspection and testing have been successfully completed.

5.3.12.1.9 All documentation pertaining to inspections and testing shall be maintained on-site within the facility.

5.3.12.1.10 Before piping systems are initially put into use, the Level 3 health care facility authority shall be responsible for ascertaining that the gas/vacuum delivered at each outlet/inlet is that shown on the outlet/inlet label and that the proper connecting fittings are installed for the specific gas/vacuum. *(See 5.3.12.1.11.)*

5.3.12.1.11 Acceptance of the verifier's reports required under 5.3.12.3, System Verification, shall be permitted to satisfy the requirements of 5.3.12.1.10.

5.3.12.2 Initial Tests.

5.3.12.2.1 General.

5.3.12.2.1.1 The tests required by 5.3.12.3.1 through 5.3.12.3.12 shall be performed prior to the tests listed in 5.3.12.3, System Verification, by one or more of the following:

(1) The installer
(2) A representative of the system supplier
(3) A representative of the system manufacturer

5.3.12.2.1.2 The test gas for positive-pressure gas systems shall be oil-free, dry Nitrogen NF.

5.3.12.2.1.3 Where manufactured assemblies are to be installed, the tests required under 5.3.12.2 shall be performed as follows:

(1) After completion of the distribution piping
(2) Prior to installation or connection of manufactured assemblies supplied through flexible hoses or flexible tubing
(3) At all station outlets/inlets on manufactured assemblies supplied through copper tubing

5.3.12.2.2 Initial Blow Down. Piping in Level 3 positive-pressure gas distribution systems shall be blown clear by means of oil-free, dry Nitrogen NF as follows:

(1) After installation of the distribution piping
(2) Before installation of station outlets and other system components (i.e., pressure alarm devices, pressure indicators, pressure relief valves, manifolds, source equipment)

5.3.12.2.3 Initial Pressure Test for Positive-Pressure Gas Systems and Copper Level 3 Vacuum Piping.

5.3.12.2.3.1 Each section of the piping in Level 3 positive-pressure gas piping systems and copper Level 3 vacuum systems shall be pressure tested using oil-free, dry Nitrogen NF.

5.3.12.2.3.2 Initial pressure tests shall be conducted as follows:

(1) After installation of station outlets/inlets rough-in assemblies. Test caps shall be permitted to be used.

Copyright National Fire Protection Association
Provided by IHS under license with NFPA
No reproduction or networking permitted without license from IHS
Not for Resale

(2) Prior to the installation of components of the distribution piping system that would be damaged by the test pressure (i.e., pressure/vacuum alarm devices, pressure/vacuum indicators, line pressure relief valves).

5.3.12.2.3.3 Where Level 3 vacuum piping systems include plastic piping, they shall be inspected to assure that there are no visible cross-connections to positive-pressure gas piping systems prior to applying test pressures to the positive-pressure systems.

5.3.12.2.3.4 The source shutoff valves for all piping systems shall remain closed during these tests.

5.3.12.2.3.5 The test pressure for positive-pressure gas piping shall be 1.5 times the system working pressure, but not less than a gauge pressure of 1035 kPa (150 psi).

5.3.12.2.3.6 The test pressure for copper Level 3 vacuum piping shall be a gauge pressure of 105 kPa (15 psi).

5.3.12.2.3.7 The test pressure shall be maintained until each joint has been examined for leakage by means of soapy water or other equally effective means of leak detection.

5.3.12.2.3.8 Leaks, if any, shall be located, replaced (if permitted) or repaired (if required), and retested.

5.3.12.2.4 Initial Leak Tests — PVC Level 3 Vacuum Piping. Plastic Level 3 vacuum piping shall be leak-tested under vacuum conditions.

5.3.12.2.4.1 Plastic Level 3 vacuum piping shall not be tested with compressed gas.

5.3.12.2.4.2 Leak tests shall be conducted after installation of station inlets.

5.3.12.2.4.3 The piping being tested shall be subjected to a vacuum of not less than 485 mm (19 in.) gauge HgV, using either the vacuum source equipment or a vacuum test pump.

5.3.12.2.4.4 The test vacuum shall be maintained until each joint has been examined for leakage.

5.3.12.2.5 Initial Cross-Connection Test. The installer shall determine that no cross-connections exist between the various Level 3 gas and vacuum piping systems.

5.3.12.2.5.1 All Level 3 gas and vacuum piping systems shall be at atmospheric pressure.

5.3.12.2.5.2 Face plates for outlets/inlets shall be installed.

5.3.12.2.5.3 Level 3 vacuum piping systems shall be subjected to a vacuum of not less than 485 mm (19 in.) gauge HgV, using either the vacuum source equipment or a test pump.

5.3.12.2.5.4 Each individual system gas outlet and vacuum inlet in each piping system shall be checked to determine that the vacuum is present only at the inlets for the vacuum system being tested.

5.3.12.2.5.5 The vacuum piping system shall be relieved to atmospheric pressure.

5.3.12.2.5.6 The test gas for all positive-pressure gas piping systems shall be oil-free, dry Nitrogen NF.

5.3.12.2.5.7 Sources of test gas and vacuum shall be disconnected from all piping systems except for the one system being tested.

5.3.12.2.5.8 The positive-pressure gas system being tested shall be pressurized to a gauge pressure of 345 kPa (50 psi) with oil-free, dry Nitrogen NF.

5.3.12.2.5.9 Each individual system gas outlet and vacuum inlet in each installed piping system shall be checked to determine that the test gas is being dispensed only from the outlets in the piping system being tested.

5.3.12.2.5.10 The cross-connection test shall be repeated for each installed positive-pressure gas piping system.

5.3.12.2.5.11 The proper labeling and identification of system outlets/inlets shall be confirmed during these tests.

5.3.12.2.6 Initial Piping Purge Test. The outlets in each Level 3 positive-pressure gas piping system shall be purged to remove any particulate matter from the distribution piping.

5.3.12.2.6.1 The test gas shall be oil-free, dry Nitrogen NF.

5.3.12.2.6.2 Using appropriate adapters, each outlet shall be purged with an intermittent high-volume flow of test gas until the purge produces no discoloration in a clean white cloth.

5.3.12.2.6.3 The purging shall be started at the furthest outlet in the system and proceed towards the source equipment.

5.3.12.2.7 Initial Standing Pressure Test for Positive-Pressure Gas Piping. After successful completion of the initial pressure tests under 5.3.12.2.3, Level 3 positive-pressure gas distribution piping shall be subjected to a standing pressure test.

5.3.12.2.7.1 Tests shall be conducted after the installation of station outlet valve bodies and face plates, and other distribution system components (i.e., pressure alarm devices, pressure indicators, and line pressure relief valves).

5.3.12.2.7.2 The source valve shall be closed during this test.

5.3.12.2.7.3 The piping systems shall be subjected to a 24-hour standing pressure test using oil-free, dry Nitrogen NF.

5.3.12.2.7.4 Test pressures shall be 20 percent above the normal system operating line pressure.

5.3.12.2.7.5 At the conclusion of the tests, there shall be no change in the test pressure greater than a gauge pressure of 35 kPa (5 psi).

5.3.12.2.7.6 Leaks, if any, shall be located, repaired (if permitted), replaced (if required), and retested.

5.3.12.2.8 Initial Standing Vacuum Test for Vacuum Systems. Level 3 vacuum systems, with either plastic or copper piping, shall be subjected to a standing vacuum test.

5.3.12.2.8.1 The piping system shall be subjected to a vacuum of not less than 485 mm (19 in.) gauge HgV for 24 hours, using either the vacuum source equipment or a test source.

5.3.12.2.8.2 During the test, the source of test vacuum shall be disconnected from the piping system.

5.3.12.2.8.3 At the conclusion of the test, the vacuum shall not have reduced to less than 300 mm (12 in.) HgV.

5.3.12.2.8.4 Leaks, if any, shall be located, repaired (if permitted), replaced (if required), and retested.

5.3.12.3 System Verification.

5.3.12.3.1 General.

5.3.12.3.1.1 Verification tests shall be conducted on Level 3 medical gases (e.g., oxygen and nitrous oxide).

5.3.12.3.1.2 Verification tests shall be performed only after all tests required in 5.3.12.2, Initial Tests, have been completed on all positive-pressure and vacuum piping systems.

Copyright National Fire Protection Association
Provided by IHS under license with NFPA
No reproduction or networking permitted without license from IHS
Not for Resale

5.3.12.3.1.3 The test gas shall be oil-free, dry Nitrogen NF or the system gas where permitted.

5.3.12.3.1.4 Verification testing shall be conducted by a party technically competent and experienced in the field of medical gas and vacuum system verification and meeting the requirements of ASSE 6030, *Professional Qualifications Standard for Medical Gas Systems Verifiers.*

5.3.12.3.1.5 Verification testing shall be performed by a party other than the installing contractor.

5.3.12.3.1.6 All verification tests required under 5.3.12.3 shall be performed after installation of any manufactured assemblies supplied through flexible hose or tubing.

5.3.12.3.1.7 Where manufactured assemblies include multiple possible connection points for terminals, each possible position shall be tested independently.

5.3.12.3.1.8 For small projects affecting a limited number of areas where the use of nitrogen is impractical, the system gas shall be permitted to be used for the following tests:

(1) Standing pressure (5.3.12.3.2)
(2) Cross-connection (5.3.12.3.3)
(3) Warning system (5.3.12.3.4)
(4) Piping purge (5.3.12.3.5)
(5) Piping particulate (5.3.12.3.6)
(6) Piping purity (5.3.12.3.7)
(7) Operational pressure (5.3.12.3.9)

5.3.12.3.1.9 All verification test results shall be reported as required in 5.3.12.1.

5.3.12.3.2 Verifier Standing Pressure Test. Level 3 medical gas piping systems (i.e., oxygen and nitrous oxide) shall be subjected to a 10-minute standing pressure test at operating line pressure using the following procedures:

(1) After the system is filled with oil-free, dry Nitrogen NF or the system gas, the source valve and any zone valves shall be closed.
(2) The piping system downstream of the valves shall show no decrease in pressure after 10 minutes.
(3) Any leaks found shall be located, repaired (if permitted), replaced (if required), and retested.

5.3.12.3.3 Verifier Cross-Connection Test. After closing of walls and completion of the requirements of 5.3.12.2, Initial Tests, it shall be determined that no cross-connections exist between the Level 3 medical gas systems and any of the other positive-pressure and vacuum piping systems by use of the following method:

(1) Shut off the source of test gas for all positive-pressure gas piping systems and reduce systems to atmospheric pressure.
(2) Using oil-free, dry Nitrogen NF, or the system gas, pressurize one of the Level 3 medical gas piping systems to a gauge pressure of 345 kPa (50 psi).
(3) Test each positive-pressure gas outlet and Level 3 vacuum inlet using appropriate adapters to verify that the test gas pressure is present only at the outlets in the Level 3 medical gas piping system being tested.
(4) After it has been verified that a Level 3 medical gas piping system is free of cross-connections, disconnect the source of test gas and reduce the piping to atmospheric pressure.
(5) Proceed to test each Level 3 medical gas piping system until each is verified to be free of cross-connections.

5.3.12.3.4 Verifier Level 3 Warning System Tests.

5.3.12.3.4.1 All warning systems that are installed for Level 3 medical gases shall be verified to ensure that all components function correctly prior to placing the system into service.

5.3.12.3.4.2 Permanent records of these tests shall be maintained.

5.3.12.3.4.3 Warning systems that are part of an addition to an existing piping system shall be tested prior to connection of the new piping to the existing system.

5.3.12.3.4.4 Tests of warning systems for new installations shall be performed after the verifier's cross-connection testing (5.3.12.3.3), but before purging the piping (5.3.12.3.5) and performing the remaining verification tests (5.3.12.3.6 through 5.3.12.3.12).

5.3.12.3.4.5 Test gases shall be either oil-free, dry Nitrogen NF, or the gas of system designation.

5.3.12.3.4.6 The audible and noncancelable alarm signals in each single treatment facility shall be checked to verify that they are in a location that will be continuously attended while the facility is in operation.

5.3.12.3.4.7 The operation of the Level 3 line pressure alarms required by 5.3.9.1(4) shall be verified.

5.3.12.3.4.8 Audible and noncancelable visual signals in each single treatment facility shall indicate if the pressure in the Level 3 medical gas main line being monitored increases or decreases 20 percent from the normal operating pressure.

5.3.12.3.4.9 The operation of the Level 3 changeover alarms required by 5.3.9.1(5) shall be verified.

5.3.12.3.4.10 Audible and noncancelable visual signals shall indicate whenever automatic changeover occurs or is about to occur.

5.3.12.3.4.11 Where Level 3 medical gas systems include other alarm features that are not mandatory under 5.3.9, they shall be functionally tested in accordance with their intended purpose and the equipment manufacturer's recommendations.

5.3.12.3.5 Verifier Piping Purge Test. In order to remove any traces of particulate matter deposited in the pipelines as a result of construction, a heavy, intermittent purging of each Level 3 medical gas (i.e., oxygen and nitrous oxide) pipeline shall be done.

5.3.12.3.5.1 The appropriate adapter shall be obtained from the facility or manufacturer, and high purge rates of at least 230 SLPM (8 SCFM) shall be put on each outlet.

5.3.12.3.5.2 After the purge is started, it shall be rapidly interrupted several times until the purge produces no discoloration in a white cloth loosely held over the adapter during the purge.

5.3.12.3.5.3 In order to avoid possible damage to the outlet and its components, this test shall not be conducted using any implement other than the correct adapter.

5.3.12.3.6 Verifier Piping Particulate Test. The cleanliness of the piping in each Level 3 medical gas (i.e., oxygen and nitrous oxide) system shall be verified as follows:

(1) The test shall be performed using oil-free, dry Nitrogen NF or the system gas.

Copyright National Fire Protection Association
Provided by IHS under license with NFPA
No reproduction or networking permitted without license from IHS
Not for Resale

(2) A minimum of 1000 L (35 ft^3) of gas shall be filtered through a clean, white 0.45-micron filter at a minimum flow rate of 100 SLPM (3.5 SCFM).
(3) Each zone shall be tested at the outlet most remote from the source.
(4) The filter shall accrue no more than 0.001 g (1 mg) of matter from any outlet tested.

5.3.12.3.7 Verifier Piping Purity Test. For each Level 3 medical gas (i.e., oxygen and nitrous oxide) system, the purity of the piping system shall be verified as follows:

(1) These tests shall be performed with oil-free, dry Nitrogen NF or the system gas.
(2) The tests shall be for total hydrocarbons (as methane) and halogenated hydrocarbons, and compared with the source gas.
(3) This test shall be performed at the outlet most remote from the source.
(4) The difference between the two tests shall in no case exceed the following:
    (a) Total hydrocarbons, 1 ppm
    (b) Halogenated hydrocarbons, 2 ppm
(5) A test shall be conducted at the outlet most remote from the source and the moisture concentration shall not exceed 500 ppm or an equivalent pressure dew point of −12°C (10°F) at 345 kPa (50 psig).

5.3.12.3.8 Verifier Final Tie-In Test.

5.3.12.3.8.1 Prior to the connection of any new Level 3 medical gas piping to its source of supply, including extensions or additions to an existing piping system, the verification tests in 5.3.12.3.1 through 5.3.12.3.7 shall be successfully performed on the new work.

5.3.12.3.8.2 Each joint in the final connection between the new work and the existing system shall be leak-tested with the gas of system designation by means of soapy water or other means effective for use with oxygen.

5.3.12.3.8.3 For Level 3 medical gases, immediately after the final connection is made and leak-tested, the specific altered zone and components in the immediate zone or area that is downstream from the point or area of intrusion shall be purged per 5.3.12.3.5.

5.3.12.3.8.4 Before the new work is used for patient care, the following tests shall be performed for all Level 3 medical gas (i.e., oxygen and nitrous oxide) systems:

(1) Operational pressure (5.3.12.3.9)
(2) Gas concentration (5.3.12.3.10)

5.3.12.3.8.5 Permanent records of these tests shall be maintained in accordance with 5.3.13.7.1.

5.3.12.3.9 Verifier Operational Pressure Test. Operational pressure tests shall be performed at each station outlet in Level 3 medical gas piping systems (i.e., oxygen and nitrous oxide) where the user makes connections and disconnections.

5.3.12.3.9.1 Tests shall be performed using either oil-free, dry Nitrogen NF or the gas of system designation.

5.3.12.3.9.2 Medical gas outlets (i.e., oxygen and nitrous oxide) shall deliver 100 SLPM (3.5 SCFM) with a pressure drop of no more than 35 kPa (5 psi) and static pressure of 345 kPa to 380 kPa (50 psi to 55 psi).

5.3.12.3.10 Verifier Gas Concentration Test. After purging each Level 3 medical gas piping system with the gas of system designation, the following shall be performed:

(1) Each medical gas outlet (i.e., oxygen and nitrous oxide) shall be analyzed for concentration of gas, by volume.
(2) Analysis shall be conducted with instruments designed to measure the specific gas dispensed.
(3) Allowable concentrations shall be as follows:
    (a) Oxygen ≥ 99 percent oxygen
    (b)*Nitrous oxide ≥ 99 percent nitrous oxide

5.3.12.3.11 Labeling. The presence and correctness of labeling required by this standard for all Level 3 medical gas components (i.e., station outlets/inlets, shutoff valves, and alarm panels) shall be verified.

5.3.12.3.12 Source Equipment Verification.

5.3.12.3.12.1 General. Source equipment verification for Level 3 medical gases shall be performed following the installation of the interconnecting pipelines, accessories, and source equipment.

5.3.12.3.12.2 Use of Source Equipment for Pipeline Verification Tests. Where the source equipment and system gas is used for verification testing of the distribution piping, the source equipment shall be verified prior to verification of the distribution piping.

5.3.12.3.12.3 Source Equipment for Level 3 Medical Gases (Oxygen and Nitrous Oxide). The system apparatus shall be tested for proper function, including the changeover from primary to secondary supply (with its changeover signal), before the system is put into service.

5.3.12.4 Final Testing of Level 3 Systems for Gas-Powered Devices and Vacuum.

5.3.12.4.1 General.

5.3.12.4.1.1 Final testing of gas-powered device systems and vacuum systems shall be performed only after all tests required by 5.3.12.2, Initial Tests, have been performed.

5.3.12.4.1.2 The tests required by 5.3.12.4.2 through 5.3.12.4.8 shall be performed by one or more of the following:

(1) The installer
(2) A representative of the system supplier
(3) A representative of the system manufacturer
(4) A system verifier per 5.3.12.3.1.5

5.3.12.4.1.3 The test gas shall be oil-free, dry Nitrogen NF or the system gas where permitted.

5.3.12.4.2 Final Standing Pressure Test (Level 3 Gas-Powered Devices). Each gas-powered device piping system shall be subjected to a 10-minute standing pressure test at operating line pressure using the following procedures:

(1) After the system is filled with oil-free, dry Nitrogen NF or the system gas, the source valve and any zone valves shall be closed.
(2) The piping system downstream of the valves shall show no decrease in pressure after 10 minutes.
(3) Any leaks found shall be located, repaired (if permitted), replaced (if required), and retested.

--`,,```,,,,````-`-`,,`,,`,`,,`---
Copyright National Fire Protection Association
Provided by IHS under license with NFPA
No reproduction or networking permitted without license from IHS
Not for Resale

5.3.12.4.3 Final Standing Vacuum Test (Level 3 Vacuum). Each Level 3 vacuum piping system shall be subjected to a 10-minute standing vacuum test at operating line vacuum using the following procedures:

(1) After the system has stabilized at the operating line vacuum, the source valve and any zone valves shall be closed.
(2) The piping system upstream of the valves shall show no decrease in vacuum after 10 minutes.
(3) Leaks, if any, shall be located, repaired (if permitted), replaced (if required), and retested.

5.3.12.4.4 Final Cross-Connection Test (Level 3 Gas-Powered Devices and Vacuum). After closing of walls and completion of the requirements of 5.3.12.2, Initial Tests, it shall be determined that no cross-connections exist between the piping systems for gas-powered devices and Level 3 vacuum using the following method:

(1) Where facilities have more than one gas or vacuum system, test each system separately.
(2) Shut off the source of test gas for all gas-powered device piping systems and reduce them to atmospheric pressure.
(3) Operate each Level 3 vacuum system at the normal system vacuum, using the source equipment.
(4) Each gas-powered device gas outlet and Level 3 vacuum inlet shall be tested with appropriate adapters to verify that vacuum is present only at the vacuum inlets in the system being tested and not at any gas-powered device gas outlets or inlets of other vacuum systems.
(5) Shut down the vacuum source equipment and slowly break the vacuum in the vacuum piping system, increasing its pressure to atmospheric.
(6) Test each Level 3 vacuum system until all are determined to be free of cross-connections.
(7) Using oil-free, dry Nitrogen NF or the system gas, pressurize the gas-powered device piping system to a gauge pressure of 345 kPa (50 psi).
(8) Test each gas-powered device gas outlet using appropriate adapters to verify that the test gas pressure is present only at the outlets in the gas-powered device system being tested.
(9) After it has been determined that a gas-powered device piping system is free of cross-connections, disconnect the source of test gas and reduce the piping to atmospheric pressure.
(10) Proceed to test each gas-powered device piping system until all are determined to be free of cross-connections.

5.3.12.4.5 Final Piping Purge Test (for Level 3 Gas-Powered Devices). In order to remove any traces of particulate matter deposited in the pipelines as a result of construction, a heavy, intermittent purging of each gas-powered device pipeline shall be done.

5.3.12.4.5.1 The appropriate adapter shall be obtained from the facility or manufacturer, and high purge rates shall be put on each outlet.

5.3.12.4.5.2 After the purge is started, it shall be rapidly interrupted several times until the purge produces no discoloration in a white cloth loosely held over the adapter during the purge.

5.3.12.4.5.3 In order to avoid possible damage to the outlet and its components, this test shall not be conducted using any implement other than the correct adapter.

5.3.12.4.6 Final Tie-In Test (Piping for Gas-Powered Devices and Level 3 Vacuum).

5.3.12.4.6.1 Prior to the connection of any new piping to its source of supply, including extensions or additions to an existing piping system, the final tests in 5.3.12.4.1 through 5.3.12.4.5 shall be successfully performed on the new work.

5.3.12.4.6.2 Each joint in the final connection between new work and an existing system shall be leak-tested with the gas of system designation or vacuum at the normal operating pressure by means of soapy water or other means effective for use with oxygen.

5.3.12.4.6.3 For gas-powered device piping, immediately after the final connection is made and leak-tested, the specific altered zone and components in the immediate zone or area that is downstream from the point or area of intrusion shall be purged per 5.3.12.4.5.

5.3.12.4.7 Labeling. The presence and correctness of labeling required by this standard for all Level 3 gas-powered device and vacuum system components (e.g., station outlets/inlets and shutoff valves) shall be checked.

5.3.12.4.8 Source Equipment Testing.

5.3.12.4.8.1 General. Source equipment checks for Level 3 gas-powered devices and Level 3 vacuum shall be performed following the installation of the interconnecting pipelines, accessories, and source equipment.

5.3.12.4.8.2 Use of Source Equipment for Pipeline Verification Tests. Where the source equipment and system gas or vacuum is used for final testing of the distribution piping, the source equipment shall be checked out and placed in operation prior to testing the distribution piping.

5.3.12.4.8.3 Level 3 Gas-Powered Devices Source Equipment. The source equipment for Level 3 gas-powered device system(s) shall be checked out and placed in operation according to the manufacturer's instructions.

5.3.12.4.8.4 Level 3 Vacuum Source Equipment. The source equipment for Level 3 vacuum systems shall be checked out and placed in operation according to the manufacturer's instructions.

5.3.13 Level 3 Operation and Management.

5.3.13.1 Special Precautions for Handling Oxygen Cylinders and Manifolds. Handling of oxygen cylinders and manifolds shall be based on CGA G-4, *Oxygen*.

5.3.13.1.1 Oxygen cylinders, containers, and associated equipment shall be protected from contact with oil or grease. Specific precautions shall include the following:

(1) Oil, grease, or readily flammable materials shall never be permitted to come in contact with oxygen cylinders, valves, regulators, gauges, or fittings.
(2) Regulators, fittings, or gauges shall never be lubricated with oil or any other flammable substance.
(3) Oxygen cylinders or apparatus shall never be handled with oily or greasy hands, gloves, or rags.

5.3.13.1.2 Equipment associated with oxygen shall be protected from contamination. Specific precautions shall include the following:

(1) Particles of dust and dirt shall be cleared from cylinder valve openings by slightly opening and closing the valve before applying any fitting to the cylinder.

Copyright National Fire Protection Association
Provided by IHS under license with NFPA
No reproduction or networking permitted without license from IHS
Not for Resale

(2) The high-pressure valve on the oxygen cylinder shall be opened before bringing the apparatus to the patient or the patient to the apparatus.
(3) An oxygen cylinder shall never be draped with any materials such as hospital gowns, masks, or caps.
(4) Cylinder-valve protection caps, where provided, shall be kept in place and be hand-tightened, except when cylinders are in use or connected for use.
(5) Valves shall be closed on all empty cylinders in storage.

5.3.13.1.3 Cylinders shall be protected from damage. Specific procedures shall include the following:

(1) Oxygen cylinders shall be protected from abnormal mechanical shock, which is liable to damage the cylinder, valve, or safety device.
(2) Oxygen cylinders shall not be stored near elevators, gangways, or in locations where heavy moving objects will strike them or fall on them.
(3) Cylinders shall be protected from the tampering of unauthorized individuals.
(4) Cylinders or cylinder valves shall not be repaired, painted, or altered.
(5) Safety relief devices in valves or cylinders shall never be tampered with.
(6) Valve outlets clogged with ice shall be thawed with warm — not boiling — water.
(7) A torch flame shall never be permitted under any circumstances to come in contact with cylinder valves or safety devices.
(8) Sparks and flame shall be kept away from cylinders.
(9) Even if they are considered to be empty, cylinders shall never be used as rollers, supports, or for any purpose other than that for which the supplier intended them.
(10) Large cylinders (exceeding size E) and containers larger than 45 kg (100 lb) weight shall be transported on a proper hand truck or cart complying with Chapter 9.
(11) Freestanding cylinders shall be properly chained or supported in a proper cylinder stand or cart.
(12) Cylinders shall not be supported by radiators, steam pipes, or heat ducts.

5.3.13.1.4 Cylinders and their contents shall be handled with care. Specific procedures shall include the following:

(1) Oxygen fittings, valves, regulators, or gauges shall never be used for any service other than that of oxygen.
(2) Gases of any type shall never be mixed in an oxygen cylinder or any other cylinder.
(3) Oxygen shall always be dispensed from a cylinder through a pressure regulator.
(4) The cylinder valve shall be opened slowly, with the face of the gauge on the regulator pointed away from all persons.
(5) Oxygen shall be referred to by its proper name, oxygen, not air, and liquid oxygen referred to by its proper name, not liquid air.
(6) Oxygen shall never be used as a substitute for compressed air.
(7) The markings stamped on cylinders shall not be tampered with because it is against federal statutes to change these markings without written authority from the Bureau of Explosives.
(8) Markings used for the identification of contents of cylinders shall not be defaced or removed, including decals, tags, stenciled marks, and the upper half of shipping tag.
(9) The owner of the cylinder shall be notified if any condition has occurred that might permit any foreign substance to enter a cylinder or valve, giving details and cylinder number.
(10) Neither cylinders nor containers shall be placed in proximity to radiators, steam pipes, heat ducts, or other sources of heat.
(11) Very cold cylinders or containers shall be handled with care to avoid injury.

5.3.13.1.5 Oxygen equipment that is defective shall not be used until one of the following has been performed:

(1) It has been repaired by competent in-house personnel.
(2) It has been repaired by the manufacturer or his or her authorized agent.
(3) It has been replaced.

5.3.13.1.6 Regulators that are in need of repair or cylinders having valves that do not operate properly shall never be used.

5.3.13.2 Special Precautions for Making Cylinder and Container Connections.

5.3.13.2.1 Wrenches and tools used to connect equipment shall be manufactured of material of adequate strength.

5.3.13.2.2 Cylinder valves shall be opened and connected in accordance with the following procedure:

(1) Make certain that apparatus and cylinder valve connections and cylinder wrenches are free of foreign materials.
(2) Turn the cylinder valve outlet away from personnel. Stand to the side — not in front and not in back. Before connecting the apparatus to cylinder valve, momentarily open cylinder valve to eliminate dust.
(3) Make connection of apparatus to cylinder valve. Tighten connection nut securely with a wrench.
(4) Release the low-pressure adjustment screw of the regulator completely.
(5) Slowly open cylinder valve to full open position.
(6) Slowly turn in the low-pressure adjustment screw on the regulator until the proper working pressure is obtained.
(7) Open the valve to the utilization apparatus.

5.3.13.2.3 Connections for containers shall be made in accordance with the container manufacturer's operating instructions.

5.3.13.3 Special Precautions for the Care of Safety Mechanisms.

5.3.13.3.1 Personnel using cylinders and containers and other equipment covered in this chapter shall be familiar with the Pin-Index Safety System *(see Chapter 9)* and the Diameter-Index Safety System *(see Chapter 9)*; both are designed to prevent utilization of the wrong gas.

5.3.13.3.2 Safety relief mechanisms, noninterchangeable connectors, and other safety features shall not be removed or altered.

5.3.13.4 Special Precautions — Storage of Cylinders and Containers.

5.3.13.4.1 Storage shall be planned so that cylinders can be used in the order in which they are received from the supplier.

5.3.13.4.2 If stored within the same enclosure, empty cylinders shall be segregated from full cylinders.

5.3.13.4.3 Empty cylinders shall be marked to avoid confusion and delay if a full cylinder is needed in a rapid manner.

Copyright National Fire Protection Association
Provided by IHS under license with NFPA
No reproduction or networking permitted without license from IHS
Not for Resale

5.3.13.4.4 Cylinders stored in the open shall be protected against the following conditions:

(1) Extremes of weather and from the ground beneath to prevent rusting
(2) Accumulations of ice or snow during winter
(3) Continuous exposure to direct rays of the sun in those localities where extreme temperatures prevail in summer

5.3.13.5 Special Precautions — Piped Patient Gas/Vacuum Systems.

5.3.13.5.1 Piping systems shall not be used for the distribution of flammable anesthetic gases.

5.3.13.5.2 Piping systems for gases shall not be used as a grounding electrode.

5.3.13.5.3 The vacuum system shall not be used for vacuum steam condensate return or other nonmedical applications.

5.3.13.5.4 Special Precautions.

5.3.13.5.4.1 Every facility shall establish a procedure for manually turning off the gas supply at the cylinder valves at the end of the work day, or when the facility is not in use.

5.3.13.5.4.2 No other method such as emergency shutoff valves or remote actuators (*see 5.3.4.1*) shall be used to turn off the gas supply.

5.3.13.6 Gas/Vacuum Systems Information and Warning Signs.

5.3.13.6.1 The gas content of medical gas piping systems shall be labeled according to 5.3.11.1.

5.3.13.7 Gas/Vacuum Systems Maintenance and Record Keeping.

5.3.13.7.1 Permanent records of all tests required by Section 5.3 shall be maintained in the organization's files.

5.3.13.7.2 A periodic testing procedure for nonflammable medical gas/vacuum and related alarm systems shall be implemented.

5.3.13.7.3 Whenever modifications are made or maintenance is performed that breaches the system, the tests specified in 5.3.12 shall be conducted on the downstream portions of the medical gas piping system.

5.3.13.7.4 A maintenance program shall be established for the following:

(1) Relief valves in accordance with applicable codes or manufacturer's recommendation
(2) The medical air compressor supply system in accordance with the manufacturer's recommendations
(3) The vacuum source and accessories in accordance with the manufacturer's recommendations
(4) Both the vacuum piping system and the secondary equipment attached to vacuum station inlets to ensure the continued good performance of the entire vacuum system
(5) The scavenger system to assure performance

5.3.13.7.5 Audible and visual alarm indicator(s) shall meet the following requirements:

(1) Be periodically tested to determine that they are functioning properly
(2) Have the records of the test maintained until the next test is performed

Chapter 6 Environmental Systems

6.1* Applicability. This chapter is applicable to health care facility laboratories and anesthetizing locations.

6.2 Nature of Hazards. See B.4.2 and B.6.2.

6.3 Source. Air exhausted from laboratory areas shall not be recirculated to other parts of the facility.

6.4* Distribution.

6.4.1 Ventilation — Anesthetizing Locations.

6.4.1.1* The mechanical ventilation system supplying anesthetizing locations shall have the capability of controlling the relative humidity at a level of 35 percent or greater.

6.4.1.2 Supply and exhaust systems for windowless anesthetizing locations shall be arranged to automatically vent smoke and products of combustion.

6.4.1.3 Ventilating systems for anesthetizing locations shall be provided that automatically (1) prevent recirculation of smoke originating within the surgical suite and (2) prevent the circulation of smoke entering the system intake, without in either case interfering with the exhaust function of the system.

6.4.1.4 The electric supply to the ventilating system shall be served by the equipment system of the essential electrical system specified in Chapter 4, Electrical Systems.

6.4.1.5 Window-type temperature regulating units (air conditioners) are permitted to be installed in exterior windows or exterior walls of anesthetizing locations *(see also E.3.4 and E.3.5)*. Where such units are employed, the provisions of 6.4.1.1 shall be met.

6.4.1.6 Systems that capture or dispose of waste anesthetic gases, if installed, shall prevent their reentry into the facility. *(See 5.3.3.2 for further requirements on WAGD systems.)*

6.4.2 Ventilation — Laboratories.

6.4.2.1* Laboratories provided with mechanical ventilation throughout or employing fume hoods as a fixed part of the exhaust system shall have the air supply and exhaust balanced to provide a negative pressure with respect to surrounding hospital occupancies.

Exception: Laboratories for procedures requiring maximum protection against contamination and not involving infectious or noxious materials are permitted to be arranged for slight positive pressure when the safety of the arrangement is affirmed by a responsible laboratory official.

6.4.2.2 Exit corridors shall not be used as plenums to supply or exhaust air from laboratory areas.

6.4.2.3* Exhaust systems for laboratory ventilation shall be arranged with motors and fans located at the discharge end of the systems, and with the exhaust air discharged above the roof in such a manner that it will not be drawn into any air intake or blown into windows.

6.4.3 Hood — Laboratories.

6.4.3.1* Fume hood and biological safety cabinet requirements shall comply with NFPA 45, *Standard on Fire Protection for Laboratories Using Chemicals.*

Copyright National Fire Protection Association
Provided by IHS under license with NFPA
No reproduction or networking permitted without license from IHS
Not for Resale

6.4.3.2 Fume hoods shall be located in areas of minimum air turbulence, away from doors and windows, and in a manner that will not impede access to egress.

6.4.3.3* Fume hoods intended for use with radioactive isotopes shall be constructed of stainless steel or other material suitable for the particular exposure.

6.4.3.4 Fume Hood Ventilation.

6.4.3.4.1 Fume hood ventilating controls shall be so arranged that shutting off the ventilation of one fume hood will not reduce the exhaust capacity or create an imbalance between exhaust and supply for any other hood connected to the same system.

6.4.3.4.2* The operation of fume hood ventilating controls shall be tested annually by a qualified person who shall certify the result of the test.

6.4.3.5 Fume hoods shall be so designed that the face velocity ventilation is adequate to prevent the backflow of contaminants into the room, especially in the presence of cross drafts or the rapid movements of an operator working at the face of the hood.

6.4.3.6 Shutoff valves for services, including gas, air, vacuum, and electricity, shall be outside of the hood enclosure in a location where they will be readily accessible in the event of fire in the hood. The location of such shutoffs shall be legibly lettered in a related location on the exterior of the hood.

6.5 Performance Criteria and Testing. (Reserved)

6.6 Administration.

6.6.1 Anesthetizing Locations.

6.6.1.1 Ventilating and humidifying equipment for anesthetizing locations shall be kept in operable condition and be continually operating during surgical procedures *(see E.3.5)*.

6.6.1.2 All gas storage locations or manifold enclosures shall be routinely inspected to ensure that the ventilation requirements stated in 5.1.3.3.3.1 are not obstructed.

6.6.2* Laboratories. Warning signs describing the nature of any hazardous effluent content shall be posted at fume hoods' discharge points, access points, and filter locations.

Chapter 7 Materials

7.1* Applicability. This chapter is applicable to any health care facility using flammable and combustible materials.

7.2 Nature of Hazards.

7.2.1 Flammability. (Reserved)

7.2.2 Combustible Loading.

7.2.2.1 Flammable Agents. Facility administrative authorities, in consultation with the medical staff and others with training and expertise, shall determine the adequacy of storage space for disinfecting agents and medicaments and shall provide and enforce regulations for the storage and handling of containers of such agents. Said regulations also shall provide for the periodic inspection and maintenance of said storage locations.

7.2.2.2 Flammable Materials.

7.2.2.2.1 Flammable Hand Cleaning Materials.

7.2.2.2.1.1* Flammable liquids, gels, or other similar materials shall be limited to patient care rooms and other approved locations.

7.2.2.2.1.2 The storage and handling of flammable liquids shall be in accordance with NFPA 30, *Flammable and Combustible Liquids Code*.

7.2.3 Toxicity of Products of Combustion. See B.4.2.

7.2.4 Chemical Burns. (Reserved)

7.2.5 Safety. (Reserved)

7.2.6 Radioactivity. (Reserved)

7.3 Source. (Reserved)

7.4 Distribution. (Reserved)

7.5 Performance Criteria and Testing. (Reserved)

7.6 Administration. (Reserved)

Chapter 8 Electrical Equipment

8.1* Applicability. This chapter is applicable to any health care facility as referenced in other chapters, and in consideration of the scope.

8.1.1 An appliance that yields erroneous data or functions poorly is potentially harmful. Quality and assurance of full appliance performance is not covered except as it relates to direct electrical or fire injury to patients or personnel.

8.1.2 Experimental or research apparatus built to order or under development shall be used under qualified supervision and shall have a degree of safety equivalent to that described herein or have a degree of safety that has been deemed acceptable by the facility.

8.2 Nature of Hazards. See B.5.2 for related electrical hazards.

8.2.1 Fire and Explosion. See B.5.1.

8.2.2 Electrical Shock. Personnel shall be trained to recognize the shock hazards created by the use of defective or improperly used electrical equipment. See B.5.2.

8.2.3 Burns. See B.5.3.

8.2.4 Interruption of Power. (Reserved)

8.2.5 RF Interference. See B.5.5.

8.3 Electrical System. See Chapter 4, Electrical Systems.

8.4 Performance Criteria and Testing.

8.4.1 Patient-Care–Related Electrical Appliances and Equipment.

8.4.1.1 Permanently Connected — Fixed Equipment. Patient-connected electric appliances shall be grounded to the equipment grounding bus in the distribution panel by an insulated grounding conductor run with the power conductors.

8.4.1.2 Cord- and Plug-Connected — Portable Equipment. All patient-care–related electrical equipment supplied by a flexible cord and plug, carrying 20 V or more, shall meet the requirements of 8.4.1.2.

8.4.1.2.1 Grounding of Appliances.

8.4.1.2.1.1 All cord-connected electrically powered appliances that are not double insulated and are used in the patient care vicinity shall be provided with a three-wire power cord and a three-pin grounding-type plug.

Copyright National Fire Protection Association
Provided by IHS under license with NFPA
No reproduction or networking permitted without license from IHS
Not for Resale

8.4.1.2.1.2 Double-insulated appliances shall be permitted to have two conductor cords.

8.4.1.2.2 Attachment Plugs. Attachment plugs installed by the facility shall meet the requirements of 10.2.2.1.

8.4.1.2.3 Power Cords. Power cords installed by the facility shall meet the requirements of 10.2.2.2.

8.4.1.2.4 Line Voltage Equipment — Anesthetizing Locations. Flexible cord for portable lamps or portable electric appliances operating at more than 12 V between conductors, intended for use in anesthetizing locations, shall meet all of the following requirements:

(1) Cords shall be continuous.
(2) Cords shall be without switches from the appliance to the attachment plug.
(3) Cords shall be of a type designated for extra-hard usage in accordance with NFPA 70, *National Electrical Code*.
(4) Cords shall be protected at the entrance to equipment by an insulating grommet.
(5) Cords shall be of sufficient length to reach any position in which the portable device is to be used.
(6) The attachment plug shall be inserted only in a fixed approved receptacle.
(7) Adapters shall be used and maintained in accordance with 8.5.2.1.7.

8.4.1.2.4.1 Foot-treadle–operated controllers shall be permitted in any anesthetizing location if appended to portable electric appliances in an approved manner. Foot-treadle–operated controllers and their connector shall be splashproof.

8.4.1.2.4.2 Two or more power receptacles supplied by a flexible cord shall be permitted to be used to supply power to plug-connected components of a movable equipment assembly that is rack-, table-, or pedestal-mounted, provided all of the following conditions are met:

(1) The receptacles are an integral part of the equipment assembly, permanently attached.
(2)*The sum of the ampacity of all appliances connected to the receptacles shall not exceed 75 percent of the ampacity of the flexible cord supplying the receptacles.
(3) The ampacity of the flexible cord shall be in accordance with NFPA 70, *National Electrical Code*.
(4)*The electrical and mechanical integrity of the assembly shall be regularly verified and documented through an ongoing maintenance program.

8.4.1.2.4.3 Overhead power receptacles shall be permitted to be supplied by a flexible cord with strain relief (ceiling drop) that is connected at a ceiling-mounted junction box in either of the following ways:

(1) Permanently
(2)*Utilizing a locking-type attachment plug cap and receptacle combination, or other method of retention

8.4.1.2.5 Adapters and Extension Cords. Adapters and extension cords shall meet the following requirements:

(1) Attachment plugs shall meet the requirements of 10.2.2.1.
(2)*Power cords shall meet the requirements of 10.2.2.2.

8.4.1.3 Testing Requirements — Fixed and Portable.

8.4.1.3.1 Physical Integrity. The physical integrity of the power cord assembly composed of the power cord, attachment plug, and cord-strain relief shall be confirmed by visual inspection or other applicable tests.

8.4.1.3.2* Resistance. For appliances that are used in the patient care vicinity the resistance between the appliance chassis, or any exposed conductive surface of the appliance, and the ground pin of the attachment plug shall be less than 0.50 ohm under the following conditions:

(1) The cord shall be flexed at its connection to the attachment plug or connector.
(2) The cord shall be flexed at its connection to the strain relief on the chassis during the resistance measurement.

Exception: The requirement shall not apply to escutcheons or nameplates, small screws, and so forth, that are unlikely to become energized.

8.4.1.3.3* Leakage Current Tests — General. The requirements in 8.4.1.3.3.1 through 8.4.1.3.3.4 shall apply to all tests. Power switch position shall be in accordance with Table 8.4.1.3.3.

Table 8.4.1.3.3 Leakage Current Tests — Power Switch Setting

Paragraph Number	Power Switch Setting	
	On and Off	On
8.4.1.3.4	X	
8.4.1.3.5	X	
8.4.1.3.6.1		X
8.4.1.3.6.2		X
8.4.1.3.6.3	X	
8.4.1.3.6.4		X
8.4.1.3.6.5		X

8.4.1.3.3.1 Resistance Test. The resistance tests of 8.4.1.3.2 shall be conducted before undertaking any leakage current measurements.

8.4.1.3.3.2* Techniques of Measurement. Test shall not be made on the load side of an isolated power system or isolation transformer.

8.4.1.3.3.3* Frequency of Leakage Current. The leakage current limits stated in 8.4.1.3.4, 8.4.1.3.5, and 8.4.1.3.6 shall be rms values for sinusoidal waveforms up to 1 kHz. For frequencies above 1 kHz, the leakage current limits shall be the values given in 8.4.1.3.4, 8.4.1.3.5, and 8.4.1.3.6 multiplied by the frequency, in kHz, up to a maximum of 10 mA.

8.4.1.3.3.4 Leakage Current in Relation to Polarity. Leakage current measurements shall be made as follows:

(1) With the polarity of the power line normal
(2) With the power switch of the appliance in the position shown in Table 8.4.1.3.3
(3) With all operating controls in the position to cause maximum leakage current readings

8.4.1.3.4 Chassis Leakage Current — Fixed Equipment.

8.4.1.3.4.1 Permanently wired appliances in the patient care vicinity shall be tested prior to installation while the equipment is temporarily insulated from ground.

Copyright National Fire Protection Association
Provided by IHS under license with NFPA
No reproduction or networking permitted without license from IHS
Not for Resale

8.4.1.3.4.2 The leakage current from frame to ground of permanently wired appliances installed in general or critical patient care areas shall not exceed 5.0 mA with all grounds lifted.

8.4.1.3.5 Chassis Leakage Current — Portable Equipment.

8.4.1.3.5.1* Leakage Current Limits. The leakage current for cord-connected appliances shall not exceed 300 μA.

8.4.1.3.5.2 Chassis leakage current between 300 μA and 500 μA shall be permitted on existing or special equipment (such as mobile X-ray machines) under the following conditions:

(1) The grounding conductor is intact.
(2) A documented maintenance schedule is established to ensure the integrity of the grounding connection. The health care facility shall be permitted to establish a protocol with shortened or lengthened time intervals, depending on the intensity of the use of the appliance and prior test data.

8.4.1.3.5.3 If multiple devices are connected together and one power cord supplies power, the leakage current shall be measured as an assembly.

8.4.1.3.5.4 When multiple devices are connected together and more than one power cord supplies power, the devices shall be separated into groups according to their power supply cord and the leakage current shall be measured independently for each group as an assembly.

8.4.1.3.5.5 Chassis Leakage Test Procedure. Measurements shall be made using the circuit, as illustrated in Figure 8.4.1.3.5.5, with the appliance ground broken in two modes of appliance operation as follows:

(1) Power plug connected normally with the appliance on
(2) Power plug connected normally with the appliance off (if equipped with an on/off switch)

(A) If the appliance has fixed redundant grounding (e.g., permanently fastened to the grounding system), the chassis leakage current test shall be conducted with the redundant grounding intact.

(B) Test shall be made with Switch A in Figure 8.4.1.3.5.5 closed.

8.4.1.3.5.6 If there is no exposed conductive surface, measurement shall be made with a simulated surface, as described in 10.2.13.4.2, that is also temporarily grounded.

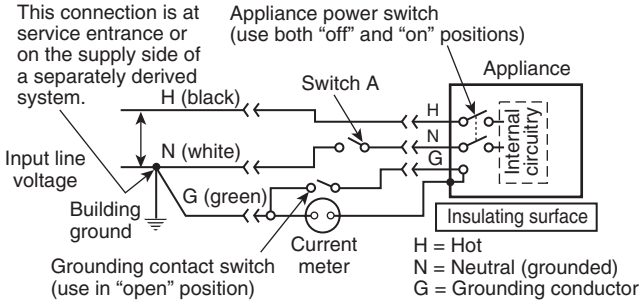

FIGURE 8.4.1.3.5.5 Test Circuit for Measuring Chassis Leakage Current.

8.4.1.3.6 Lead Leakage Current Tests and Limits — Portable Equipment.

8.4.1.3.6.1* Lead to Ground — Nonisolated Input. The leakage current between all patient leads connected together and ground shall be measured with the power plug connected normally and the device on. An acceptable test configuration shall be as illustrated in Figure 8.4.1.3.6.1. The leakage current shall not exceed 100 μA for ground wire open and closed.

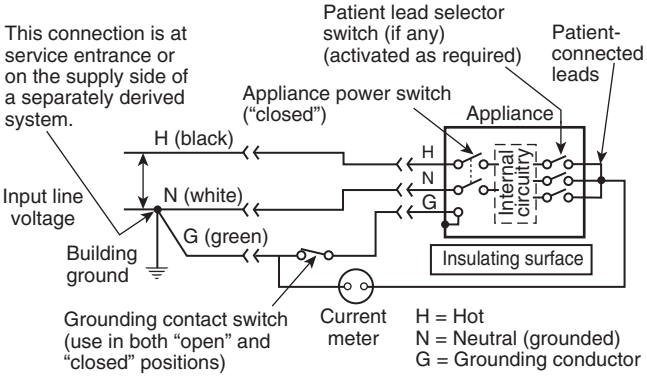

FIGURE 8.4.1.3.6.1 Test Circuit for Measuring Leakage Current Between Patient Leads and Ground — Nonisolated.

8.4.1.3.6.2 Lead to Ground — Isolated Input. The leakage current between each patient lead and ground for an appliance with isolated leads shall be measured with the power plug connected normally and the device on. An acceptable test configuration shall be as illustrated in Figure 8.4.1.3.6.2. The leakage current shall not exceed 10 μA with the ground intact and 50 μA with the ground open.

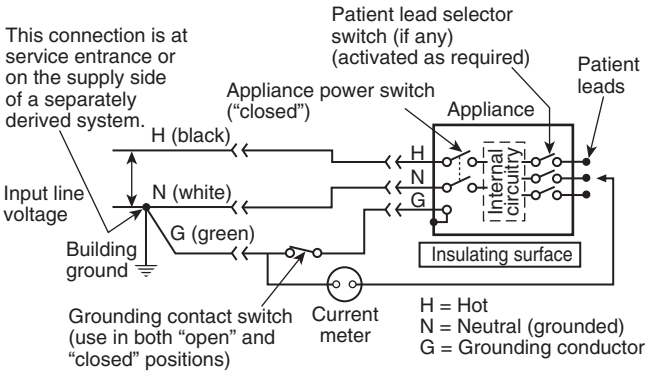

FIGURE 8.4.1.3.6.2 Test Circuit for Measuring Leakage Current Between Patient Leads and Ground — Isolated.

8.4.1.3.6.3 Isolation Test — Isolated Input. Only isolated patient leads shall be connected to intracardiac catheters or electrodes. The current driven into the leads of an appliance that has isolated leads, when an external power source at line voltage and frequency is applied between each lead and ground, shall be measured in accordance with Figure 8.4.1.3.6.3. The leakage current shall not exceed 50 μA in each case. The test shall be made with the appliance's normal patient cables.

Copyright National Fire Protection Association
Provided by IHS under license with NFPA
No reproduction or networking permitted without license from IHS
Not for Resale

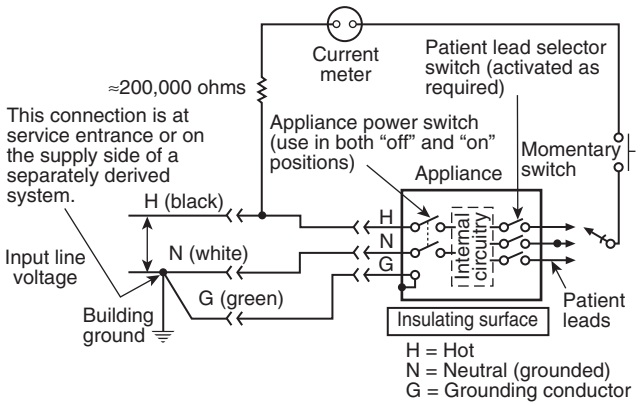

FIGURE 8.4.1.3.6.3 Test Circuit for Measuring the Electrical Isolation of Isolated Patient Leads.

(A) Safety precautions (such as including a resistance in series to limit the current, insulation of the meter, and a momentary switch) shall be taken to protect the operator.

(B) In appliances without a power cord with ungrounded, exposed conductive surfaces, measurements shall be made with the exposed conductive surfaces temporarily grounded.

(C) If there is no exposed conductive surface, measurement shall be made with a simulated surface, as described in 10.2.13.4.2, that is also temporarily grounded.

8.4.1.3.6.4 Between Leads — Nonisolated Input. The leakage current between any one lead (not ground) and each other lead shall be measured. An acceptable test configuration shall be as illustrated in Figure 8.4.1.3.6.4. The leakage current shall not exceed 50 μA for the ground wire open and closed.

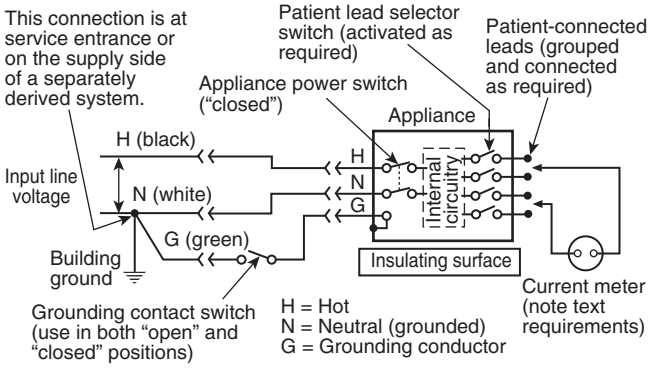

FIGURE 8.4.1.3.6.4 Test Circuit for Measuring Leakage Current Between Patient Leads — Nonisolated and Isolated.

8.4.1.3.6.5 Between Leads — Isolated Input. The leakage current between any one lead (not ground) and each other lead shall be measured. An acceptable test configuration shall be as illustrated in Figure 8.4.1.3.6.4. The leakage current shall not exceed 10 μA with the ground intact and 50 μA with the ground open.

8.4.2 Nonpatient Electrical Appliances and Equipment.

8.4.2.1 Permanently Connected — Fixed. (Reserved)

8.4.2.2 Cord- and Plug-Connected — Portable Equipment.

8.4.2.2.1 Patient Care Area.

8.4.2.2.1.1 The leakage current for facility-owned appliances (e.g., housekeeping or maintenance appliances) shall not exceed 500 μA in the following situations:

(1) When they are used in a patient care vicinity
(2) When they will, in normal use, contact patients

Tests shall be made with Switch A in Figure 8.4.1.3.5.5 in the open position for two-wire equipment that is not double-insulated.

8.4.2.2.1.2 Household or office appliances not commonly equipped with grounding conductors in their power cords shall be permitted provided they are not located within the patient care vicinity. Double-insulated appliances shall be permitted in the patient care vicinity.

8.4.2.2.2* Laboratory.

8.4.2.2.2.1 Portable equipment intended for laboratory use shall be provided with an approved method to protect personnel against shock.

8.4.2.2.2.2 All electrical heating equipment to be used for laboratory procedures shall be equipped with overtemperature-limit controls so arranged that thermostatic failure will not result in hazardous temperatures.

8.4.2.2.2.3 When electrical heating equipment is intended for use with flammable or combustible liquids, its electrical components shall be at least one of the following:

(1) Explosionproof
(2) Intrinsically safe
(3) Ventilated

8.4.2.2.2.4 Electrical heating equipment equipped with fans shall be arranged with an interlock that will disconnect the heating elements when the fan is inoperative, unless the fan is not essential to safe operation.

8.4.2.2.2.5* Electrical equipment intended for use in laboratories shall meet the requirements of NFPA 45, *Standard on Fire Protection for Laboratories Using Chemicals.*

8.5 Administration.

8.5.1 Responsibilities of Governing Body. (Reserved)

8.5.2 Policies.

8.5.2.1 General.

8.5.2.1.1 Medical and surgical electrical instrumentation and monitoring devices, as well as all electric appliances used for the care and entertainment of the patient, acquired for use by the facility (e.g., purchased, leased, donated, constructed onsite, loaned, etc.), shall meet the safety performance criteria of Chapter 10.

8.5.2.1.2 Testing Intervals.

8.5.2.1.2.1 The facility shall establish policies and protocols for the type of test and intervals of testing for each appliance.

8.5.2.1.2.2 All appliances used in patient care areas shall be tested in accordance with 8.4.1.3 or 8.4.2.2.1.1 before being put into service for the first time and after repair or modification. Patient-care–related electrical appliances shall be retested at intervals determined by their normal location or area of normal use, but not exceeding the intervals listed below:

(1) General care areas — 12 months
(2) Critical care areas — 6 months
(3) Wet locations — 6 months

Copyright National Fire Protection Association
Provided by IHS under license with NFPA
No reproduction or networking permitted without license from IHS
Not for Resale

Exception No. 1: The testing intervals listed are intended to be nominal values, and facilities shall be permitted to adopt a protocol using either longer or shorter intervals provided that there is a documented justification based on previous safety testing records for the equipment in question, unusually light or heavy utilization, or similar considerations.

Exception No. 2: Facility-owned household or other appliances that are used in the patient care vicinity, but that are not intended to contact the patient, shall be tested at intervals deemed appropriate by the facility. The facility shall be permitted to structure a testing protocol and frequency for some equipment that might be more limited than that prescribed in 8.4.1.3.

8.5.2.1.3 The tests specified in 8.4.1.3.6 shall be required only for incoming inspections and following repairs and modifications that might have compromised the patient lead leakage current.

8.5.2.1.4* After fixed equipment is installed, it shall be tested periodically in accordance with 4.3.3.1.3 and meet the following criteria:

(1) 500 mV for general care areas
(2) 40 mV for critical care areas

8.5.2.1.5 Protection of Patients with Direct Electrical Pathways to the Heart.

8.5.2.1.5.1 Only equipment that is specifically designed for the purpose, that is, provided with suitable isolated patient leads or connections, shall be connected directly to electrically conductive pathways to a patient's heart.

8.5.2.1.5.2 The facility shall have a policy that prohibits the use of external cardiac pacemakers and pacing leads with external terminals that are not properly protected from potentially hazardous contact with conductive surfaces.

8.5.2.1.6 Controls. Electrical appliance controls (such as bed, pillow speakers, television, and nurse-call controls) that do not meet the minimum requirements of Section 10.2, Patient-Care–Related Electrical Appliances, shall be mounted so that they cannot be taken into the bed. Existing low-voltage controls used in general patient care areas shall be permitted.

8.5.2.1.7 Adapters and Extension Cords.

8.5.2.1.7.1 Adapters and extension cords meeting the requirements of 8.4.1.2.5 shall be permitted to be used.

8.5.2.1.7.2 Three-to-two-prong adapters shall not be permitted.

8.5.2.1.7.3 The wiring shall be tested for all of the following:

(1) Physical integrity
(2) Polarity
(3) Continuity of grounding at the time of assembly and periodically thereafter

8.5.2.1.8* Appliances Intended to Deliver Electrical Energy. Electrical-energy–delivering appliances shall conform to the leakage, grounding, and other requirements of this chapter when powered but not delivering energy.

8.5.2.1.9 Specification of Conditions of Purchase. The procurement authority shall include in its purchasing documents requirements or conditions specifically related to the facility's use of the appliance. These requirements and conditions shall include, but not be limited to, the following:

(1) The type of appliance listing or certification required, if any
(2) The delivery of manufacturer's test data, where pertinent
(3) Special conditions of use (such as in anesthetizing or other locations with special hazards)
(4) Unusual environmental conditions (such as high humidity, moisture, salt spray, etc.)
(5)*The type of electric power system (i.e., grounded or isolated) intended to energize the appliance
(6) The nature of the overcurrent devices
(7) The use of auxiliary emergency power

8.5.2.1.10* Manuals for Appliances. Purchase specifications shall require the vendor to supply the following manuals for operators or users upon delivery of the appliance:

(1) Installation and operating instructions
(2) Inspection and testing procedures
(3) Maintenance details *(see 10.2.8.1.1)*

8.5.2.1.11 System Demonstration.

8.5.2.1.11.1 Any system consisting of several electric appliances shall be demonstrated as a complete system, after installation, by the vendor designated to assume system responsibility, and prior to acceptance of the system by the facility. The vendor shall demonstrate the operation of the system and provide initial instruction to operators and maintenance personnel.

8.5.2.1.11.2 Paragraph 8.5.2.1.11.1 shall not apply to facilities that assemble their own systems.

8.5.2.1.12 Electrical Equipment Systems. Purchase contracts for electrical equipment systems, such as nurse call and signaling, that consist of interconnected elements, shall require all of the following:

(1) That the elements be listed to function together
(2) That the manufacturers provide documentation for such interconnection
(3) That the systems be installed by personnel qualified to do such installations

8.5.2.1.13 Appliances Not Provided by the Facility. Policies shall be established for the control of appliances not supplied by the facility.

8.5.2.2 Servicing and Maintenance of Equipment.

8.5.2.2.1 Service manuals, instructions, and procedures provided by the manufacturer shall be used in the maintenance of equipment.

8.5.2.2.2 A scheduled preventive maintenance program shall be followed.

8.5.2.2.3 Areas designated for the servicing of oxygen equipment shall be clean, free of oil and grease, and not used for the repair of other equipment.

8.5.2.2.4 Defective electrical apparatus shall be tagged and repaired or discarded.

8.5.2.2.5 The health care facility shall monitor the use of appliances and portable electrical equipment, such as drills, that can cause electrical interference during operative procedures.

8.5.2.3 During Surgery.

8.5.2.3.1 Active electrodes or other applicators of electrosurgical, surgical laser, or fiber optic devices shall be secured as recommended by the manufacturer of the device, when not in active use.

--`,,```,,,,````-`-`,,`,,`,`,,`---
Copyright National Fire Protection Association
Provided by IHS under license with NFPA
No reproduction or networking permitted without license from IHS
Not for Resale

8.5.2.3.2 The cable that provides power from the electrosurgical generator to the active electrode shall be disconnected from the generator when contamination occurs.

8.5.2.4 During Administration of Respiratory Therapy.

8.5.2.4.1* Electrical equipment used within the site of intentional expulsion shall have no hot surfaces.

8.5.2.4.2 When only the remote control or signal leads of a device are to be used in the site of intentional expulsion, only the control or signal leads shall be required to comply with 8.5.2.4.1.

8.5.2.4.3 Subparagraphs 8.5.2.4.1 and 8.5.2.4.2 shall not apply to small (less than 2 W), hermetically sealed heating elements such as light bulbs.

8.5.2.4.4 Electrical equipment sold with the intent to be used in oxygen-enriched atmospheres shall be listed for use in oxygen-enriched atmospheres.

8.5.2.4.5* Electrical equipment used within oxygen delivery equipment shall be listed for use in oxygen-enriched atmospheres.

8.5.2.4.6* High-energy–delivering probes (such as defibrillator paddles) or other electrical devices that do not comply with 8.5.2.4.1 and 8.5.2.4.2 that are deemed essential to the care of an individual patient and must be used within an administration site or within oxygen-delivery equipment, shall be permitted.

8.5.2.5 Laboratory.

8.5.2.5.1* The laboratory shall establish policies and protocols for the type of test and intervals of testing for each appliance.

8.5.2.5.2* The physical integrity of the power cord, attachment plug, and cord strain-relief shall be confirmed at least annually by visual inspection and other appropriate tests.

8.5.3 Record Keeping.

8.5.3.1 Patient Care Appliances.

8.5.3.1.1 Instruction Manuals.

8.5.3.1.1.1 A permanent file of instruction and maintenance manuals as described in 10.2.8.1.1 shall be maintained and be accessible.

8.5.3.1.1.2 The file of manuals shall be in the custody of the engineering group responsible for the maintenance of the appliance.

8.5.3.1.1.3 Duplicate instruction and maintenance manuals shall be available to the user.

8.5.3.1.1.4 Any safety labels and condensed operating instructions on an appliance shall be maintained in legible condition.

8.5.3.1.2* Documentation.

8.5.3.1.2.1 A record shall be maintained of the tests required by this chapter and associated repairs or modifications.

8.5.3.1.2.2 At a minimum, this record shall contain all of the following:

(1) Date
(2) Unique identification of the equipment tested
(3) Indication of which items have met or have failed to meet the performance requirements of 8.5.3.1.2

8.5.3.1.3 Test Logs. A log of test results and repairs shall be maintained and kept for a period of time in accordance with a health care facility's record retention policy.

8.5.4 Use. (Reserved)

8.5.5 Qualification and Training of Personnel.

8.5.5.1* Personnel concerned for the application or maintenance of electric appliances shall be trained on the risks associated with their use.

8.5.5.1.1 The health care facilities shall provide programs of continuing education for its personnel.

8.5.5.1.2 Continuing education programs shall include periodic review of manufacturers' safety guidelines and usage requirements for electrosurgical units and similar appliances.

8.5.5.2 Personnel involved in the use of energy-delivering devices including, but not limited to, electrosurgical, surgical laser, and fiberoptic devices, shall receive periodic training in fire suppression.

8.5.5.3 Equipment shall be serviced by qualified personnel only.

Chapter 9 Gas Equipment

9.1* Applicability.

9.1.1* This chapter applies to the use, at normal atmospheric pressure, of all of the following:

(1) Nonflammable medical gases
(2) Vapors and aerosols
(3) Equipment required for their administration

9.1.2 When used in this chapter, the term *oxygen* is intended to mean 100 percent oxygen as well as mixtures of oxygen and air.

9.1.3* This chapter does not apply to special atmospheres, such as those encountered in hyperbaric chambers.

9.2 Nature of Hazards. See Section B.6.

9.3 Cylinder and Container Source.

9.3.1 Cylinders shall be permitted to be fitted with valves that include a means to slow the initial opening pressurization.

9.3.2 Cylinders and containers shall comply with 5.1.3.1.

9.3.3 Cylinder valve outlet connections shall conform to CGA V-1, *Standard for Compressed Gas Cylinder Valve Outlet and Inlet Connections* (ANSI B57.1) (includes Pin-Index Safety System for medical gases). *(See 5.1.3.1.)*

9.3.4 When low-pressure threaded connections are employed, they shall be in accordance with the Compressed Gas Association standard for noninterchangeable, low-pressure connections for medical gases, air, and suction, CGA V-5, *Diameter-Index Safety System (Noninterchangeable Low Pressure Connections for Medical Gas Applications).*

9.3.5 Low-pressure quick-coupler connections shall be noninterchangeable between gas services.

9.3.6 Regulators and gauges intended for use in high-pressure service shall be listed for such service.

9.3.7 Pressure-reducing regulators shall be used on high-pressure cylinders to reduce the pressure to working pressures.

Copyright National Fire Protection Association
Provided by IHS under license with NFPA
No reproduction or networking permitted without license from IHS
Not for Resale

9.3.8 Approved regulators or other gas-flow control devices shall be used to reduce the cylinder pressure of every cylinder used for medical purposes. All such devices shall have connections so designed that they attach only to cylinders of gas for which they are designated.

9.3.9* Equipment that will permit the intermixing of different gases, either through defects in the mechanism or through error in manipulation in any portion of the high-pressure side of any system in which these gases might flow, shall not be used for coupling cylinders containing compressed gases.

9.3.10 Cylinder valve outlet connections for oxygen shall be Connection No. 540 as described in CGA V-1, *Standard for Compressed Gas Cylinder Valve Outlet and Inlet Connections* (ANSI B57.1).

9.3.11 Cylinder valve outlet connections for nitrous oxide shall be Connection No. 326 as described in CGA V-1, *Standard for Compressed Gas Cylinder Valve Outlet and Inlet Connections* (ANSI B57.1).

9.4 Cylinder and Container Storage Requirements.

9.4.1 Storage for nonflammable gases equal to or greater than 85 m^3 (3000 ft^3) compressed shall comply with 5.1.3.3.2 and 5.1.3.3.3.

9.4.2 Storage for nonflammable gases greater than 8.5 m^3 (300 ft^3) but less than 85 m^3 (3000 ft^3) compressed shall comply with the requirements in 9.4.2.1 through 9.4.2.3.

9.4.2.1 Storage locations shall be outdoors in an enclosure or within an enclosed interior space of noncombustible or limited-combustible construction, with doors (or gates outdoors) that can be secured against unauthorized entry.

9.4.2.2 Oxidizing gases, such as oxygen and nitrous oxide, shall not be stored with any flammable gas, liquid, or vapor.

9.4.2.3 Oxidizing gases such as oxygen and nitrous oxide shall be separated from combustibles or materials by one of the following:

(1) A minimum distance of 6.1 m (20 ft)
(2) A minimum distance of 1.5 m (5 ft) if the entire storage location is protected by an automatic sprinkler system designed in accordance with NFPA 13, *Standard for the Installation of Sprinkler Systems*
(3) An enclosed cabinet of noncombustible construction having a minimum fire protection rating of ½ hour

9.4.2.4 Liquefied gas container storage shall comply with 5.1.3.4.12.

9.4.2.5 Cylinder and container storage locations shall meet 5.1.3.3.1.7 with respect to temperature limitations.

9.4.2.6 Electrical fixtures in storage locations shall meet 5.1.3.3.2(5).

9.4.2.7 Cylinder protection from mechanical shock shall meet 5.3.13.1.3.

9.4.2.8 Cylinder or container restraint shall meet 5.3.13.1.3.

9.4.2.9 Smoking, open flames, electric heating elements, and other sources of ignition shall be prohibited within storage locations and within 6.1 m (20 ft) of outside storage locations.

9.4.2.10 Cylinder valve protection caps shall meet 5.3.13.1.3.

9.4.2.11 Gas cylinder and liquefied gas container storage shall comply with 5.1.3.4.12.

9.4.3 Storage for nonflammable gases with a total volume compressed equal to or less than 8.5 m^3 (300 ft^3) shall comply with the requirements in 9.4.3.1 and 9.4.3.2.

9.4.3.1 Individual cylinder storage associated with patient care areas, not to exceed 2100 m^2 (22,500 ft^2) of floor area, shall not be required to be stored in enclosures.

9.4.3.2 Precautions in handling these cylinders shall be in accordance with 9.7.2.

9.4.3.3 When small-size (A, B, D, or E) cylinders are in use, they shall be attached to a cylinder stand or to a therapy apparatus of sufficient size to render the entire assembly stable.

9.4.3.4 An individual cylinder placed in patient room for immediate use by a patient shall not be required to be stored in an enclosure.

9.4.3.5 Cylinders shall not be chained to portable or movable apparatus such as beds and oxygen tents.

9.4.4 Signs.

9.4.4.1 A precautionary sign, readable from a distance of 1.5 m (5 ft), shall be displayed on each door or gate of the storage room or enclosure.

9.4.4.2 The sign shall include the following wording as a minimum:

CAUTION

OXIDIZING GAS(ES) STORED WITHIN

NO SMOKING

9.5 Performance Criteria and Testing.

9.5.1 Portable Patient Care Gas Equipment.

9.5.1.1* Anesthetic apparatus shall be subject to approval by the authority having jurisdiction.

9.5.1.2* Each yoke on anesthetic apparatus constructed to permit attachment of small cylinders equipped with flush-type valves shall have two pins installed as specified in CGA V-1, *Standard for Compressed Gas Cylinder Valve Outlet and Inlet Connections* (ANSI B57.1).

9.5.1.3 Testing.

9.5.1.3.1 Interventions requiring testing shall include, but not be limited to, the following:

(1) Alteration of pipeline hose or fittings
(2) Alteration of internal piping
(3) Adjustment of selector switches or flush valves
(4) Replacement or repair of flowmeters or bobbins

9.5.1.3.2 After any adjustment or repair involving use of tools, or any modification of the gas piping supply connections or the pneumatic power supply connections for the anesthesia ventilator, or other pneumatically powered device if one is present, and before use on patients, the gas anesthesia apparatus shall be tested at the final common path to the patient to determine that oxygen and only oxygen is delivered from the oxygen flowmeters and the oxygen flush valve, if any.

9.5.1.3.3 Before the gas anesthesia apparatus is returned to service, each fitting and connection shall be checked to verify its proper indexing to the respective gas service involved.

Copyright National Fire Protection Association
Provided by IHS under license with NFPA
No reproduction or networking permitted without license from IHS
Not for Resale

9.5.1.3.4 Before the gas anesthesia apparatus is returned to service, an oxygen analyzer, or a similar device, shall be used to verify the oxygen concentration.

9.5.1.4* Yoke-type connections between anesthesia apparatus and flush-type cylinder valves (commonly used with anesthetic gas cylinders) shall be Connection No. 860 in accordance with CGA V-1, *Compressed Gas Cylinder Valve Outlet and Inlet Connections* (ANSI B57.1).

9.5.2 Apparatus for Administering Respiratory Therapy.

9.5.2.1 Oxygen-delivery equipment intended to rest on the floor shall be equipped with a base designed to render the entire assembly stable during storage, transport, and use. If casters are used, they shall conform to Class C of U.S. Government Commercial Standard 223-59, *Casters, Wheels, and Glides for Hospital Equipment*.

9.5.2.2 Oxygen enclosures of rigid materials shall be fabricated of noncombustible materials.

9.5.2.3 Equipment supplied from cylinders or containers shall be designed and constructed for service at full cylinder or container pressure, or constructed for use with, or equipped with pressure-reducing regulators.

9.5.2.4 Humidification or reservoir jars containing liquid to be dispersed into a gas stream shall be made of clear, transparent material, impervious to contained solutions and medications, and shall permit observation of the liquid level and consistency.

9.5.2.5 Humidifiers and nebulizers shall be equipped with provisions for overpressure relief or alarm if the flow becomes obstructed.

9.5.2.6 Humidifiers and nebulizers shall be incapable of tipping or shall be mounted so that any tipping or alteration from the vertical shall not interfere with function or accuracy.

9.5.3 Nonpatient Gas Equipment.

9.5.3.1 Carts and Hand Trucks.

9.5.3.1.1 Construction. Carts and hand trucks for cylinders and containers shall be constructed for the intended purpose, be self-supporting, and be provided with appropriate chains or stays to retain cylinders or containers.

9.5.3.1.2 Use. Carts and hand trucks that are intended to be used in anesthetizing locations or cylinder and container storage rooms communicating with anesthetizing locations shall comply with the appropriate provisions of 13.4.1.

9.5.3.2 Gas Equipment — Laboratory. Gas appliances shall be of an approved design and installed in accordance with NFPA 54, *National Fuel Gas Code*. Shutoff valves shall be legibly marked to identify the material they control.

9.6 Administration.

9.6.1 Policies.

9.6.1.1 Elimination of Sources of Ignition.

9.6.1.1.1 Smoking materials (e.g., matches, cigarettes, lighters, lighter fluid, tobacco in any form) shall be removed from patients receiving respiratory therapy.

9.6.1.1.2* No sources of open flame, including candles, shall be permitted in the area of administration.

9.6.1.1.3* Sparking toys shall not be permitted in any patient care area.

9.6.1.1.4 Nonmedical appliances that have hot surfaces or sparking mechanisms shall not be permitted within oxygen-delivery equipment or within the site of intentional expulsion.

9.6.1.2 Misuse of Flammable Substances.

9.6.1.2.1 Flammable or combustible aerosols or vapors, such as alcohol, shall not be administered in oxygen-enriched atmospheres *(see B.6.1.11)*.

9.6.1.2.2 Oil, grease, or other flammable substances shall not be used on/in oxygen equipment.

9.6.1.2.3 Flammable and combustible liquids shall not be permitted within the site of intentional expulsion.

9.6.1.3 Servicing and Maintenance of Equipment.

9.6.1.3.1 Defective equipment shall be immediately removed from service.

9.6.1.3.2 Defective electrical apparatus shall not be used.

9.6.1.3.3 Areas designated for the servicing of oxygen equipment shall be clean, free of oil and grease, and not used for the repair of other equipment.

9.6.1.3.4 Service manuals, instructions, and procedures provided by the manufacturer shall be used in the maintenance of equipment.

9.6.1.3.5 A scheduled preventive maintenance program shall be followed.

9.6.2 Gases in Cylinders and Liquefied Gases in Containers.

9.6.2.1 Qualification and Training of Personnel.

9.6.2.1.1* Personnel concerned with the application and maintenance of medical gases and others who handle medical gases and the cylinders that contain the medical gases shall be trained on the risks associated with their handling and use.

9.6.2.1.2 The health care facilities shall provide programs of continuing education for their personnel.

9.6.2.1.3 Continuing education programs shall include periodic review of safety guidelines and usage requirements for medical gases and the cylinders. *(See Sections B.2 and B.6.)*

9.6.2.1.4 Equipment shall be serviced only by personnel trained in the maintenance and operation of the equipment.

9.6.2.2 Transfilling Cylinders.

9.6.2.2.1 Mixing of compressed gases in cylinders shall be prohibited.

9.6.2.2.2 Transfer of gaseous oxygen from one cylinder to another shall be in accordance with CGA P-2.5, *Transfilling of High Pressure Gaseous Oxygen to be Used for Respiration*.

9.6.2.2.3 Transfer of any gases from one cylinder to another in patient care areas of health care facilities shall be prohibited.

9.6.2.3 Transferring Liquid Oxygen. Transferring of liquid oxygen from one container to another shall be accomplished at a location specifically designated for the transferring that is as follows:

(1) The area is separated from any portion of a facility wherein patients are housed, examined, or treated by a separation of a fire barrier of 1-hour fire-resistive construction.
(2) The area is mechanically ventilated, is sprinklered, and has ceramic or concrete flooring.

Copyright National Fire Protection Association
Provided by IHS under license with NFPA
No reproduction or networking permitted without license from IHS
Not for Resale

(3) The area is posted with signs indicating that transferring is occurring, and that smoking in the immediate area is not permitted.

9.6.2.3.1 Transferring shall be accomplished utilizing equipment designed to comply with the performance requirements and producers of CGA P-2.6, *Transfilling of Liquid Oxygen to be Used for Respiration*, and adhering to those procedures.

9.6.2.3.2 The use and operation of small portable liquid oxygen systems shall comply with the requirements of CGA P-2.7, *Guide for the Safe Storage, Handling, and Use of Portable Liquid Oxygen Systems in Healthcare Facilities*.

9.6.2.4 Ambulatory Patients. Ambulatory patients on oxygen therapy shall be permitted access to all flame and smoke free areas within the health care facility.

9.6.3 Use (Including Information and Warning Signs).

9.6.3.1 Labeling.

9.6.3.1.1 Equipment listed for use in oxygen-enriched atmospheres shall be so labeled.

9.6.3.1.2 Oxygen-metering equipment and pressure-reducing regulators shall be conspicuously labeled:

OXYGEN — USE NO OIL

9.6.3.1.3 Flowmeters, pressure-reducing regulators, and oxygen-dispensing apparatus shall be clearly and permanently labeled, designating the gas or mixture of gases for which they are intended.

9.6.3.1.4 Apparatus whose calibration or function is dependent on gas density shall be labeled as to the proper supply gas gauge pressure (kPa/psi) for which it is intended.

9.6.3.1.5 Oxygen-metering equipment, pressure-reducing regulators, humidifiers, and nebulizers shall be labeled with the name of the manufacturer or supplier.

9.6.3.1.6 Cylinders and containers shall be labeled in accordance with CGA C-7, *Guide to the Preparation of Precautionary Labeling and Marking of Compressed Gas Containers*. Color coding shall not be utilized as a primary method of determining cylinder or container content.

9.6.3.1.7 All labeling shall be durable and withstand cleansing or disinfection.

9.6.3.2* Signs.

9.6.3.2.1 In health care facilities where smoking is not prohibited, precautionary signs readable from a distance of 1.5 m (5 ft) shall be conspicuously displayed wherever supplemental oxygen is in use and in aisles and walkways leading to that area; they shall be attached to adjacent doorways or to building walls or be supported by other appropriate means.

9.6.3.2.2 In health care facilities where smoking is prohibited and signs are prominently (strategically) placed at all major entrances, secondary signs with no-smoking language shall not be required.

9.6.3.2.3 The nonsmoking policies shall be strictly enforced.

9.6.3.3 Transportation, Storage, and Use of Equipment.

9.6.3.3.1 Flow-control valves on administering equipment shall be closed prior to connection and when not in use.

9.6.3.3.2 Apparatus shall not be stored or transported with liquid agents in reservoirs.

9.6.3.3.3 Care shall be observed in attaching connections from gas services to equipment and from equipment to patients.

9.6.3.3.4 Fixed or adjustable orifice mechanisms, metering valves, regulators, and gauges shall not be connected directly to high-pressure cylinders unless specifically listed for such use and provided with appropriate safety devices.

9.6.3.3.5 Equipment shall only be serviced by qualified personnel.

9.7 Operation and Management of Cylinders.

9.7.1 Administration. Administrative authorities of health care organizations shall provide policies and procedures for safe practices.

9.7.1.1 Purchase specifications shall include the following:

(1) Specifications for cylinders
(2) Marking of cylinders, regulators, and valves
(3) Proper connection of cylinders supplied to the facility
(4) Cylinders shall be permitted to be fitted with valves that include a means to slow the initial opening pressurization.

9.7.1.2 Training procedures shall include the following:

(1) Maintenance programs in accordance with the manufacturer's recommendations for the piped gas system
(2) Use and transport of equipment and the proper handling of cylinders, containers, hand trucks, supports, and valve protection caps
(3) Proper uses of the medical–surgical vacuum system in order to eliminate practices that reduce the system's effectiveness, such as leaving suction tips and catheters open when not actually aspirating, and using equipment arrangements that are improperly trapped or are untrapped
(4) Verify gas content and mechanical connection specificity of each cylinder or container prior to placing them into service.
(5) Annual training by the supplier on the operation of a bulk cryogenic system when provided.

9.7.1.3 Policies for enforcement shall include the following:

(1) Regulations for the storage and handling of cylinders and containers of oxygen and nitrous oxide
(2) Regulations for the safe handling of oxygen and nitrous oxide in anesthetizing locations
(3) Prompt evaluation of all signal warnings and all necessary measures taken to re-establish the proper functions of the medical gas and vacuum systems
(4) Organizational capability and resources to cope with a complete loss of any medical gas or vacuum system
(5) All tests required in 5.1.12.3 shall be successfully conducted prior to the use of any medical gas or vacuum piping system for patient care
(6) Locations intended for the delivery vehicle delivering cryogenic liquid to bulk cryogenic liquid systems shall remain open and shall not be used for any other purpose (e.g., vehicle parking, storage of trash containers)

9.7.2 Special Precautions for Handling Oxygen Cylinders and Manifolds. Handling of oxygen cylinders and manifolds shall be based on CGA G-4, *Oxygen*.

9.7.2.1 Oxygen cylinders, containers, and associated equipment shall be protected from contact with oil or grease. Specific precautions shall include the following:

(1) Oil, grease, or readily flammable materials shall never be permitted to come in contact with oxygen cylinders, valves, regulators, gauges, or fittings.

Copyright National Fire Protection Association
Provided by IHS under license with NFPA
No reproduction or networking permitted without license from IHS
Not for Resale

(2) Regulators, fittings, or gauges shall never be lubricated with oil or any other flammable substance.
(3) Oxygen cylinders or apparatus shall never be handled with oily or greasy hands, gloves, or rags.

9.7.2.2 Equipment associated with oxygen shall be protected from contamination. Specific precautions shall include the following:

(1) Particles of dust and dirt shall be cleared from cylinder valve openings by slightly opening and closing the valve before applying any fitting to the cylinder.
(2) The high-pressure valve on the oxygen cylinder shall be opened slowly before bringing the apparatus to the patient or the patient to the apparatus.
(3) An oxygen cylinder shall never be draped with any materials such as hospital gowns, masks, or caps.
(4) Cylinder-valve protection caps, where provided, shall be kept in place and be hand-tightened, except when cylinders are in use or connected for use.
(5) Valves shall be closed on all empty cylinders in storage.

9.7.2.3 Cylinders shall be protected from damage. Specific procedures shall include the following:

(1) Oxygen cylinders shall be protected from abnormal mechanical shock, which is liable to damage the cylinder, valve, or safety device.
(2) Oxygen cylinders shall not be stored near elevators, gangways, or in locations where heavy moving objects will strike them or fall on them.
(3) Cylinders shall be protected from the tampering of unauthorized individuals.
(4) Cylinders or cylinder valves shall not be repaired, painted, or altered.
(5) Safety relief devices in valves or cylinders shall never be tampered with.
(6) Valve outlets clogged with ice shall be thawed with warm — not boiling — water.
(7) A torch flame shall never be permitted under any circumstances to come in contact with cylinder valves or safety devices.
(8) Sparks and flame shall be kept away from cylinders.
(9) Even if they are considered to be empty, cylinders shall never be used as rollers, supports, or for any purpose other than that for which the supplier intended them.
(10) Large cylinders (exceeding size E) and containers larger than 45 kg (100 lb) weight shall be transported on a proper hand truck or cart complying with 9.5.3.1.
(11) Freestanding cylinders shall be properly chained or supported in a proper cylinder stand or cart.
(12) Cylinders shall not be supported by radiators, steam pipes, or heat ducts.

9.7.2.4 Cylinders and their contents shall be handled with care. Specific procedures shall include the following:

(1) Oxygen fittings, valves, regulators, or gauges shall never be used for any service other than that of oxygen.
(2) Gases of any type shall never be mixed in an oxygen cylinder or any other cylinder.
(3) Oxygen shall always be dispensed from a cylinder through a pressure regulator.
(4) The cylinder valve shall be opened slowly, with the face of the indicator on the regulator pointed away from all persons.
(5) Oxygen shall be referred to by its proper name, oxygen, not air, and liquid oxygen referred to by its proper name, not liquid air.
(6) Oxygen shall never be used as a substitute for compressed air.
(7) The markings stamped on cylinders shall not be tampered with because it is against federal statutes to change these markings without written authority from the Bureau of Explosives.
(8) Markings used for the identification of contents of cylinders shall not be defaced or removed, including decals, tags, stenciled marks, and the upper half of the shipping tag.
(9) The owner of the cylinder shall be notified if any condition has occurred that might permit any foreign substance to enter a cylinder or valve, giving details and cylinder number.
(10) Neither cylinders nor containers shall be placed in proximity of radiators, steam pipes, heat ducts, or other sources of heat.
(11) Very cold cylinders or containers shall be handled with care to avoid injury.

9.7.2.5 Oxygen equipment that is defective shall not be used until one of the following tasks has been performed:

(1) It has been repaired by competent in-house personnel.
(2) It has repaired by the manufacturer or his or her authorized agent.
(3) It has been replaced.

9.7.2.6 Regulators that are in need of repair or cylinders having valves that do not operate properly shall never be used.

9.7.3 Special Precautions for Making Cylinder and Container Connections.

9.7.3.1* Wrenches and tools used to connect respiratory therapy equipment shall not be required to be nonsparking.

9.7.3.2 Cylinder valves shall be opened and connected in accordance with the following procedure:

(1) Make certain that apparatus and cylinder valve connections and cylinder wrenches are free of foreign materials.
(2) Turn the cylinder valve outlet away from personnel. Stand to the side — not in front and not in back. Before connecting the apparatus to cylinder valve, momentarily open cylinder valve to eliminate dust.
(3) Make connection of apparatus to cylinder valve. Tighten connection nut securely with a wrench.
(4) Release the low-pressure adjustment screw of the regulator completely.
(5) Slowly open cylinder valve to full open position.
(6) Slowly turn in the low-pressure adjustment screw on the regulator until the proper working pressure is obtained.
(7) Open the valve to the utilization apparatus.

9.7.3.3 Connections for containers shall be made in accordance with the container manufacturer's operating instructions.

9.7.4 Special Precautions for the Care of Safety Mechanisms.

9.7.4.1 Personnel using cylinders and containers and other equipment covered in this chapter shall be familiar with the Pin-Index Safety System and the Diameter-Index Safety System. Both are designed to prevent utilization of the wrong gas.

Copyright National Fire Protection Association
Provided by IHS under license with NFPA
No reproduction or networking permitted without license from IHS
Not for Resale

9.7.4.2 Safety relief mechanisms, noninterchangeable connectors, and other safety features shall not be removed, altered, or replaced.

9.7.5 Special Precautions — Storage of Cylinders and Containers.

9.7.5.1 Storage shall be planned so that cylinders can be used in the order in which they are received from the supplier.

9.7.5.2 If stored within the same enclosure, empty cylinders shall be segregated from full cylinders.

9.7.5.3 Empty cylinders shall be marked to avoid confusion and delay if a full cylinder is needed in a rapid manner.

9.7.5.4 Cylinders stored in the open shall be protected as follows:

(1) Against extremes of weather and from the ground beneath to prevent rusting
(2) During winter, against accumulations of ice or snow
(3) In summer, screened against continuous exposure to direct rays of the sun in those localities where extreme temperatures prevail

9.7.5.5 No cylinders containing oxygen or nitrous oxide, other than those connected to anesthetic apparatus, shall be kept or stored in anesthetizing locations.

9.8 Gas/Vacuum Systems Maintenance and Record Keeping.

9.8.1 Permanent records of all tests required by 5.1.12.3.1 through 5.1.12.3.14 shall be maintained in the organization's files.

9.8.2 The supplier of the bulk cryogenic liquid system shall provide documentation of vaporizer(s) sizing criteria to the facility.

9.8.3 An annual review of bulk system capacity shall be conducted to ensure the source system has sufficient capacity.

9.8.4 Central supply systems for nonflammable medical gases shall conform to the following:

(1) Be inspected annually
(2) Be maintained by a qualified representative of the equipment owner
(3) Have a record of the annual inspection available for review by the authority having jurisdiction

9.8.5 A periodic testing procedure for nonflammable medical gas/vacuum and related alarm systems shall be implemented.

9.8.6 Whenever modifications are made or maintenance is performed that breaches the system, the verification tests specified in 5.1.12.3 shall be conducted on the downstream portions of the medical gas piping system.

9.8.7 A maintenance program shall be established for the following:

(1) The medical air compressor supply system in accordance with the manufacturer's recommendations.
(2) The facility shall establish a testing and calibration procedure that assures carbon monoxide monitors are calibrated at least annually or more often if recommended by the manufacturer.
(3)*Both the medical–surgical vacuum piping system and the secondary equipment attached to medical–surgical vacuum station inlets to ensure the continued good performance of the entire medical–surgical vacuum system.
(4) The WAGD system to assure performance.

9.8.8 Audible and visual alarm indicators shall meet the following requirements:

(1) Be periodically tested to determine that they are functioning properly
(2) Have the records of the test maintained until the next test is performed

9.8.9* Medical–surgical vacuum station inlet terminal performance, as required in 5.1.12.3.10.4, shall be tested as follows:

(1) On a regular preventive maintenance schedule as determined by the facility maintenance staff
(2) Based on flow of free air (Nl/min or SCFM) into a station inlet while simultaneously checking the vacuum level

9.9 Policies and Procedures.

9.9.1 Administration. Administrative authorities of health care organizations shall provide policies and procedures for safe practices.

9.9.1.1 Purchase specifications shall include the following:

(1) Specifications for cylinders
(2) Marking of cylinders, regulators, and valves
(3) Proper connection of cylinders supplied to the facility

9.9.1.2 Training procedures shall include the following:

(1) Maintenance programs in accordance with the manufacturer's recommendations for the piped gas system
(2) Use and transport of equipment and the proper handling of cylinders, containers, hand trucks, supports, and valve protection caps
(3) Proper uses of the medical–surgical vacuum system in order to eliminate practices that reduce the system's effectiveness, such as leaving suction tips and catheters open when not actually aspirating, and using equipment arrangements that are improperly trapped or are untrapped

9.9.1.3 Policies for enforcement shall include the following:

(1) Regulations for the storage and handling of cylinders and containers of oxygen and nitrous oxide
(2) Regulations for the safe handling of oxygen and nitrous oxide in anesthetizing locations
(3) Prompt evaluation of all signal warnings and the performance of all necessary measures to reestablish the proper functions of the medical gas system
(4) The capability and resources of the organization to cope with a complete loss of any medical gas system
(5) All tests required in 5.3.12 successfully conducted prior to the use of any medical gas piping system for patient care

Chapter 10 Manufacturer Requirements

10.1* Applicability. This chapter applies to equipment manufactured for use in the delivery of patient care.

10.2* Patient-Care–Related Electrical Appliances.

10.2.1 Mechanical Construction.

10.2.1.1 Separation of Patient Circuits. Patient-connected circuits within an appliance shall be separated or insulated from

Copyright National Fire Protection Association
Provided by IHS under license with NFPA
No reproduction or networking permitted without license from IHS
Not for Resale

all other circuits within the appliance to prevent accidental contact with hazardous voltages or currents.

10.2.1.2 Mechanical Stability. The appliance shall be mechanically stable in the position of normal use. If the appliance is intended for use in an anesthetizing location, 13.4.1 shall apply.

10.2.2 Electrical Requirements — Appliances Equipped with Power Cords.

10.2.2.1* Attachment Plugs. Attachment plugs listed for the purpose shall be used on all cord-connected appliances.

10.2.2.1.1* Construction and Use. The attachment plug shall be a two-pole, three-wire grounding type.

10.2.2.1.2 Appliances used in special locations or for special purposes shall be equipped with attachment plugs equipped with plugs approved for the location *(e.g., see 4.3.2.2.6)*.

10.2.2.1.3 Power cords of an appliance that do not require and do not contain a grounding conductor shall not be fitted with a grounding-type plug *(see 10.2.2.2.5)*.

10.2.2.1.4 Appliances supplied by other than 120 V single-phase systems shall use the grounding-type plug (cap) appropriate for the particular power system.

10.2.2.1.5 The grounding prong of the plug shall be the first to be connected to and the last to be disconnected from the receptacle.

10.2.2.1.6 If screw terminals are used, the stranded conductor shall be twisted to prevent stray strands, but the bundle shall not be tinned after twisting.

10.2.2.1.7 If the conductor is not twisted, it shall be attached by an approved terminal lug.

10.2.2.1.8 The power-cord conductors shall be arranged so that the conductors are not under tension in the plug.

10.2.2.1.9 The grounding conductor shall be the last one to disconnect when a failure of the plug's strain relief allows the energized conductors to be disrupted.

10.2.2.1.10 Strain Relief. Strain relief shall be provided.

10.2.2.1.10.1 The strain relief shall not cause thinning of the conductor insulation.

10.2.2.1.10.2 The strain relief of replaceable plugs shall be capable of being disassembled.

10.2.2.1.10.3 Plugs shall be permitted to be integrally molded onto the cord jacket if the design is listed for the purpose.

10.2.2.1.11 Testing. The wiring of each cord assembly shall be tested for continuity and polarity at the time of manufacture, when assembled into an appliance, and when repaired.

10.2.2.2 Power Cords.

10.2.2.2.1 Material and Gauge.

10.2.2.2.1.1 The flexible cord, including the grounding conductor, shall be of a type suitable for the particular application, listed for use at a voltage equal to or greater than the rated power line voltage of the appliance, and have an ampacity, as given in Table 400.5(A) of NFPA 70, *National Electrical Code*, equal to or greater than the current rating of the device.

10.2.2.2.1.2* "Hard Service" (SO, ST, or STO) or "Junior Hard Service" (SJO, SJT, or SJTO) or equivalent listed flexible cord shall be used except where an appliance with a cord of another designation has been listed for the purpose.

10.2.2.2.2 Grounding Conductor.

10.2.2.2.2.1 Each electric appliance shall be provided with a grounding conductor in its power cord.

10.2.2.2.2.2 The grounding conductor shall be no smaller than 18 AWG.

10.2.2.2.2.3 The grounding conductor of cords longer than 4.6 m (15 ft) shall be no smaller than 16 AWG.

10.2.2.2.2.4 Grounding conductors shall meet the resistance requirements of 10.2.13.2.

10.2.2.2.2.5 A grounding conductor in the power cord shall not be required for listed double-insulated appliances, but such a grounding conductor shall be permitted to be used to ground exposed conductive surfaces *(see 10.2.3.2)*.

10.2.2.2.3 Separable Cord Sets.

10.2.2.2.3.1 A separable power cord set shall be permitted to be used if it can be shown that an accidental disconnection does not pose a hazard.

10.2.2.2.3.2 Separable power cord sets shall be designed so that the grounding conductor is the first to be connected and the last to be disconnected.

10.2.2.2.3.3 Cord-set plugs and receptacles at the appliance shall be polarized in accordance with ANSI/NEMA WD 6, *Wiring Devices — Dimensional Requirements*. Appliances with separable cord sets shall meet the grounding-wire-resistance requirements of 10.2.13.2, Grounding Circuit Continuity — Measurement of Resistance, when the cord set is connected to the appliance.

10.2.2.2.3.4 Both the cord set and the means of connection to the appliance shall be listed for the purpose.

10.2.2.2.4 Connection to Circuit and Color Codes.

10.2.2.2.4.1* Power cords, regardless of whether intended for use on grounded or isolated power systems, shall be connected in accordance with the conventions of a grounded system.

10.2.2.2.4.2* The circuit conductors in the cord shall be connected to the plug and the wiring in the appliance so that any of the following devices, when used in the primary circuit, are connected to the ungrounded conductor:

(1) The center contact of an Edison base lampholder
(2) A solitary fuseholder
(3) A single-pole, overcurrent-protective device
(4) Any other single-pole, current-interrupting device

10.2.2.2.4.3 A second fuseholder or other overcurrent-protective device provided in the appliance shall be permitted to be placed in the grounded side of the line.

10.2.2.2.5 Cords Without Grounding Conductors. The power cord of an appliance that does not require and does not contain a grounding conductor shall not be fitted with a grounding-type plug.

10.2.2.2.6 Testing. The wiring of each cord assembly shall be tested for continuity and polarity at the time of manufacture, when assembled into an appliance, and when repaired.

--`,,```,,,,````-`-`,,`,,`,`,,`---

Copyright National Fire Protection Association
Provided by IHS under license with NFPA
No reproduction or networking permitted without license from IHS
Not for Resale

10.2.2.2.7 Cord Strain Relief.

10.2.2.2.7.1 Cord strain relief shall be provided at the attachment of the power cord to the appliance so that mechanical stress, either pull, twist, or bend, is not transmitted to internal connections.

10.2.2.2.7.2 A strain relief molded onto the cord shall be bonded to the jacket and shall be of compatible material.

10.2.2.2.8 Storage.

10.2.3 Wiring Within Appliances Equipped with Power Cords.

10.2.3.1 Protection of Wiring in Appliances. Within the appliance, the power conductors of the cord and the associated primary wiring (other than the grounding conductor) shall be mounted and dressed to minimize accidental electrical contact with the frame or exposed conductive parts of the appliance.

10.2.3.2* Grounding of Exposed Conductive Surfaces. All exposed conductive surfaces of an electric appliance that could become energized from internal sources shall be bonded together to provide electric continuity with the connection to the grounding conductor.

10.2.3.3 Replacement Connection. Ready replacement of the power cord shall be permitted except where the power cord is not intended to be replaced by the user.

10.2.3.4 Connection of the Grounding Conductor.

10.2.3.4.1 The grounding conductor shall be connected to the exposed metal or frame of the appliance by a terminal or bolt so that an electrical connection is always maintained.

10.2.3.4.2 The grounding connection shall remain intact during electrical or mechanical repair of the appliance, except during replacement of the power cord.

10.2.3.4.3 The grounding conductor shall be the last conductor to disconnect when a failure of the plug's strain relief at the appliance allows the energized conductors to be disrupted.

10.2.3.4.4 When a grounding conductor is not required and is not provided, the appliance shall be labeled to indicate that fact.

10.2.3.5 Connections with Grounding Conductor. Any component, such as a filter or test circuit, within an appliance that intentionally reduces the impedance between the energized conductors and the grounding conductor shall be in operation when the leakage current tests specified in 10.2.13.4 are performed.

10.2.3.6* Overcurrent Protection.

10.2.3.6.1 An overcurrent protective device shall be permitted to be placed in any of the following locations:

(1) In the attachment plug
(2) In the power cord
(3) In the main body of the appliance

10.2.3.6.2 The overcurrent protective device shall precede any other components within the appliance, including the primary power-control switch.

10.2.3.6.3 Listed insulated terminal blocks or strips, listed connecting devices, and RFI filters for use on power systems shall be permitted to precede the overcurrent device *(see 10.2.3.5)*.

10.2.3.6.4 The use of overcurrent protective devices within the appliance shall be permitted.

10.2.3.6.5 The power-control switch and overcurrent protective device shall be permitted to be combined into one component provided it is identified to indicate the combined function.

10.2.3.7 Primary Power-Control Switch.

10.2.3.7.1 A primary power-control switch when provided on an appliance shall interrupt all primary power conductors, including the neutral conductor.

10.2.3.7.2 The grounding conductor shall not be interrupted by the switch.

10.2.3.7.3 When the primary power wiring of an appliance is polarized, a primary power control switch shall not be required to interrupt the neutral conductor.

10.2.3.7.4 An in-line switch shall be permitted in a primary power cord only if the switch is listed with the appliance with which it is intended to be used.

10.2.3.8 Rack- or Cart-Mounted Equipment.

10.2.3.8.1 Each appliance mounted in an equipment rack or cart, when rated by the manufacturer as a stand-alone appliance, shall independently meet the requirements of 10.2.13.

10.2.3.8.2 When multiple appliances, as designated by the manufacturer, are mounted together in a cart or rack, and one power cord supplies power, the cart or rack shall meet the requirements of 10.2.13.

10.2.4 Connectors and Connections to Devices.

10.2.4.1 Indexing of Receptacles for Patient Leads.

10.2.4.1.1 Receptacles on appliances shall be designed and constructed so that those contacts that deliver electric current in a way and of a magnitude greater than 500 μA, when measured in accordance with 10.2.13.5, are female and indexed.

10.2.4.1.2 Receptacles and plugs shall be polarized if improper orientation can create a hazard.

10.2.4.2* Distinctive Receptacles for Patient Leads. Where reversal or misconnection of patient leads to an appliance constitutes a possible hazard (for example, reversal of active and dispersive electrodes of electrosurgical machines), distinctive, noninterchangeable connections shall be employed.

10.2.4.3 Patient Lead Connections.

10.2.4.3.1 Lead Termination. The connector, distal to the patient, on a patient lead shall be constructed so that the connector cannot be inserted to make contact with the live parts of a power receptacle or to engage any part of the appliance that can introduce a risk of electric shock, fire, or personal injury.

10.2.4.3.2 Isolated Patient Lead. The appliance connector of an isolated patient lead shall be constructed so that, when not inserted properly in the appliance, the end of the conductor of the lead cannot electrically contact any conductive surface.

10.2.5* Line Voltage Variations and Transients — General. All appliances shall be capable of operating within line voltage variations that conform with ANSI C84.1, *Voltage Ratings: Electric Power Systems and Equipment.*

Copyright National Fire Protection Association
Provided by IHS under license with NFPA
No reproduction or networking permitted without license from IHS
Not for Resale

10.2.6 General Design and Manufacturing Requirements.

10.2.6.1 Thermal Standards.

10.2.6.1.1 Electric appliances not designed to supply heat to the patient, and operated within reach of a nonambulatory patient, shall not have exposed surface temperatures in excess of 50°C (122°F).

10.2.6.1.2 Surfaces maintained in contact with the skin of patients and not intended to supply heat shall not be hotter than 40°C (104°F).

10.2.6.2 Toxic Materials.

10.2.6.2.1 Surfaces that contact patients shall be free of materials that commonly cause adverse reactions.

10.2.6.2.2 Coatings used on these surfaces shall conform to ANSI Z66.1, *Specifications for Paints and Coatings Accessible to Children to Minimize Dry Film Toxicity.*

10.2.6.3* Chemical Agents. Electric appliances containing hazardous chemicals shall be designed to facilitate the replenishment of these chemicals without spillage to protect the patient, the operating personnel, and the safety features of the appliance from such chemicals.

10.2.6.4 Electromagnetic Compatibility. All appliances shall be designed so that they are capable of operating in a radio frequency electromagnetic environment where limits are established by IEC 60601-1-2, *Medical Electrical Equipment — General Requirements for Safety — Part 2: Collateral Standard: Electromagnetic Compatibility — Requirements and Tests.*

10.2.6.5 Operation with Essential Electrical System.

10.2.6.5.1 General. Equipment (fixed or appliances) shall be designed to operate normally when energized by a standby power source that conforms to the requirements of Chapter 4.

10.2.6.5.2 Power Transfer.

10.2.6.5.2.1 Following transfer of power between the normal power system and the essential electrical system, a patient-care-related appliance shall resume function in the mode of operation that existed prior to the transfer.

10.2.6.5.2.2 If the appliance cannot maintain its mode of operation in the event of a power transfer, it shall default to a nonhazardous status and clearly indicate by audible or visible signals that its mode of operation has changed.

10.2.6.5.3 Programmable Appliances.

10.2.6.5.3.1 De-energization of the power supply of a programmable appliance shall not result in the loss or change of any part of the program or data required for normal operation.

10.2.6.5.3.2 Subparagraph 10.2.6.5.3.1 shall not apply to computers and programmable appliances that are not directly related to patient care.

10.2.6.5.3.3 Patient-care–related appliances that suffer a loss of program or vital data shall default to a start-up status and clearly indicate by audible or visual signals that their program or data has been altered or lost.

10.2.7 Fire and Explosion Hazards.

10.2.7.1 Materials and Supplies.

10.2.7.1.1 Materials used in the construction of, and supplies for, electric appliances shall be noncombustible or flame retardant and impermeable to liquids (such as water and intravenous solutions) and gases to the extent practicable; or the materials used in the construction of, and supplies for, electric appliances shall not ignite from internal heating or arcing resulting from any and all possible fault conditions.

10.2.7.1.2 Materials used in the construction and operation of electric appliances shall be permitted to be combustible when it is essential to their intended function.

10.2.7.2* Oxygen-Enriched Atmospheres. Electric appliances employing oxygen, or that are intended to be used in oxygen-enriched atmospheres, shall comply with all of the following:

(1) Chapter 9
(2) Chapter 20
(3) All applicable provisions of this chapter

10.2.7.3 Inhalation Anesthetizing Locations. Electric appliances used in inhalation anesthetizing locations shall comply with all of the following:

(1) Chapter 8
(2) Subsection 13.4.1
(3) All applicable provisions of this chapter

10.2.8 Instruction Manuals and Labels.

10.2.8.1 Manuals.

10.2.8.1.1 The manufacturer of the appliance shall furnish operator's, maintenance, and repair manuals with all units.

10.2.8.1.2 These manuals shall include operating instructions, maintenance details, and testing procedures and shall include the following where applicable:

(1) Illustrations that show location of controls
(2) Explanation of the function of each control
(3) Illustrations of proper connection to the patient and other equipment
(4) Step-by-step procedures for proper use of the appliance
(5) Safety considerations in application and in servicing
(6) Difficulties that might be encountered, and care to be taken if the appliance is used on a patient simultaneously with other electric appliances
(7) Schematics, wiring diagrams, mechanical layouts, parts lists, and other pertinent data for the appliance as shipped
(8) Functional description of the circuit
(9) Electrical supply requirements (i.e., volts, frequency, amperes, and watts), heat dissipation, weight, dimensions, output current, output voltage, and other pertinent data
(10) The limits of electrical supply variations — performance specifications of the appliance shall be given for the applicable limits of electrical supply variations
(11) Technical performance specifications including design levels of leakage current
(12) Instructions for unpacking, inspecting, installing, adjusting, and aligning
(13) Comprehensive preventive and corrective maintenance and repair procedures

10.2.8.1.3 The information itemized shall be permitted to be supplied in the form of a separate operating manual and a separate maintenance manual, except that the separate maintenance manual shall also include all the information included in the operating manual.

10.2.8.2 Operating Instructions on Appliances. Condensed operating instructions shall be permanently attached to, or displayed on, any appliance that is intended to be used in emergency situations and that results in injury or death to the operator or patient if improperly used.

Copyright National Fire Protection Association
Provided by IHS under license with NFPA
No reproduction or networking permitted without license from IHS
Not for Resale

10.2.8.3 Labeling.

10.2.8.3.1 The manufacturer shall furnish, for all appliances, labels that are legible and that remain so after being in service for the expected life of the appliance under hospital service and cleaning conditions.

10.2.8.3.2 Controls and indicators shall be labeled to indicate their function.

10.2.8.3.3 Appliances shall be labeled with precautionary statements if applicable.

10.2.8.3.4 All appliance labeling shall include the following:

(1) Model numbers
(2) Date of manufacture
(3) Manufacturer's name
(4) Electrical ratings including voltage, frequency, current, and/or wattage of the device

10.2.8.3.5 Date of manufacture shall be permitted to be a code, if its interpretation is provided to the user.

10.2.8.3.6 Appliances shall be labeled to indicate if they are listed for use as medical equipment and have isolated patient leads.

10.2.8.3.7 Appliances intended for use in anesthetizing locations shall be labeled in an approved manner. *(See 13.4.1.)*

10.2.9 Additional Requirements for Special Appliances.

10.2.9.1 Signal Transmission Between Appliances.

10.2.9.1.1* General. Signal transmission lines from an appliance in a patient location to remote appliances shall employ a signal transmission system designed to prevent hazardous current from flowing in the grounding interconnection of the appliances.

10.2.9.1.2 Outdoor Signal Transmission. Outdoor signal transmission lines from appliances attached to patients shall be equipped with surge protection appropriate to the type of transmission line used. Such appliances or signal transmission lines shall be designed to prevent a hazard to the patient from exposure of the lines to lightning, power contact, power induction, rise in ground potential, radio interference, and so forth.

10.2.9.2 Appliances Intended to Deliver Electrical Energy.

10.2.9.2.1* Conditions for Meeting Safety Requirements. Electrical-energy–delivering appliances shall conform to the leakage, grounding, and other requirements of this chapter when powered but not delivering energy.

10.2.9.2.2 Specific Requirements by Type of Device.

10.2.9.2.2.1* Electrically Powered Transducers. Exposed metal parts of these devices shall be considered electrodes and meet the applicable requirements of 10.2.13.

10.2.9.2.2.2 Connectors shall be designed to prevent inadvertent interchange of leads if interchange constitutes a hazard to the patient or operator.

10.2.9.2.2.3* Patient Impedance Measuring Devices. For a particular application, the combination of frequency and current levels shall limit the applied current to the minimum necessary to achieve the medical purposes, and shall not exceed the limits given in 10.2.13.5. These limits shall be permitted to be exceeded if essential for the intended clinical function.

10.2.9.2.2.4* Electrotherapeutic Devices. Appliances that require specific pulse forms or high power levels shall be designed to protect the operator and attendant personnel from accidental electric shock.

10.2.9.2.2.5* Electrosurgery. Electrosurgical devices shall meet the requirements of 10.2.9.2.1.

10.2.9.2.2.6* Cardiac Defibrillation. Cardiac defibrillators shall be designed to protect the operator and attendant personnel from accidental electric shock.

10.2.9.3 Electrical Equipment in Oxygen-Enriched Atmospheres. Appliances or part(s) of an appliance or system (e.g., pillow speaker, remote control, pulse oximeter probe) to be used in the site of intentional expulsion shall comply with one of the following:

(1) Be listed for use in oxygen-enriched atmospheres
(2) Be sealed so as to prevent an oxygen-enriched atmosphere from reaching electrical components. The sealing material shall be of the type that will still seal even after repeated exposure to water, oxygen, mechanical vibration, and heating from the external circuitry
(3) Be ventilated so as to limit the oxygen concentration surrounding electrical components to below 23.5 percent by volume
(4) Have both of the following characteristics:
    (a) No hot surfaces over 300°C (573°F), except for small (less than 2 W) hermetically sealed heating elements such as light bulbs.
    (b) No exposed switching or sparking points of electrical energy that fall to the right of the curve for the appropriate type of circuit illustrated in Figure 10.2.9.3(a) through Figure 10.2.9.3(f). The dc (or peak ac) open-circuit voltage and short-circuit current shall be used.

10.2.10 Low-Voltage Appliances and Appliances Not Connected to the Electric Power Distribution System.

10.2.10.1 General. Appliances and instruments operating from batteries or their equivalent, or from an external source of low voltage, or that are not connected to the electric power distribution system shall conform to all applicable requirements of Section 10.2. These appliances shall include communication systems except for telephones, signaling systems, entertainment systems, remote-control systems, and low-energy power systems.

10.2.10.2 Rechargeable Appliances. Battery-operated appliances that are rechargeable while in use shall meet all the requirements of 10.2.13.3.

10.2.10.3 Low-Voltage Connectors. Attachment plugs used on low-voltage circuits shall have configurations that do not permit interchangeable connection with circuits of other voltages.

10.2.10.4 Isolation of Low-Voltage Circuits.

10.2.10.4.1 Circuits of 30 V (dc or ac rms) or less shall be electrically isolated from the power distribution system.

10.2.10.4.2 Grounded low-voltage circuits shall be permitted provided that load currents are not carried in the grounding conductor.

10.2.11* Cardiac Monitors and Electrocardiographs. Design of electrocardiographs, cardiac monitors, or blood-pressure monitors intended for use on patients in critical care shall include protection against equipment damage during defibrillation of the patient.

Copyright National Fire Protection Association
Provided by IHS under license with NFPA
No reproduction or networking permitted without license from IHS
Not for Resale

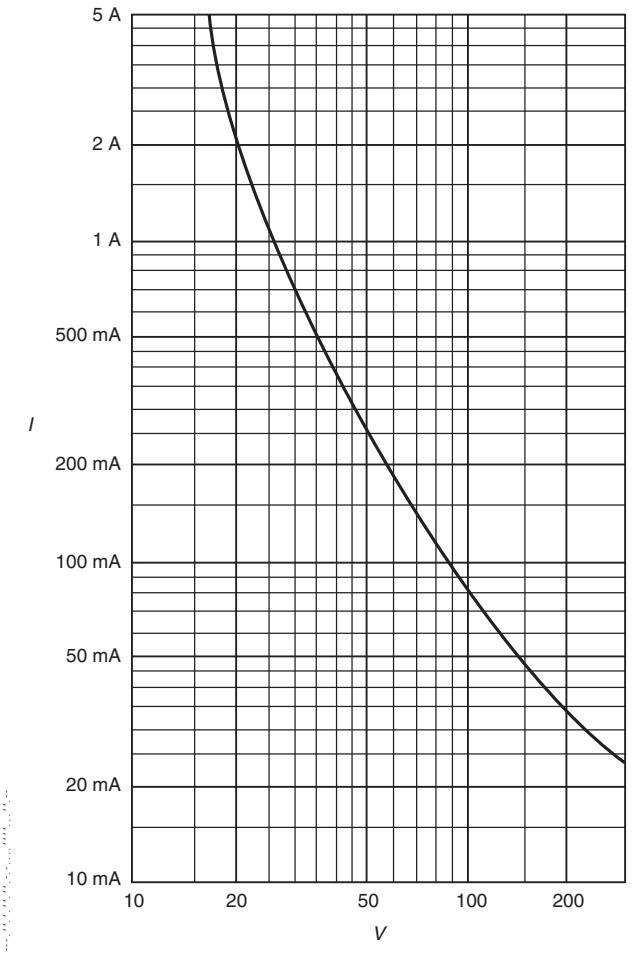

FIGURE 10.2.9.3(a) Resistance Circuits (L < 1 mH). Minimum igniting currents, applicable to all circuits containing cadmium, zinc, or magnesium.

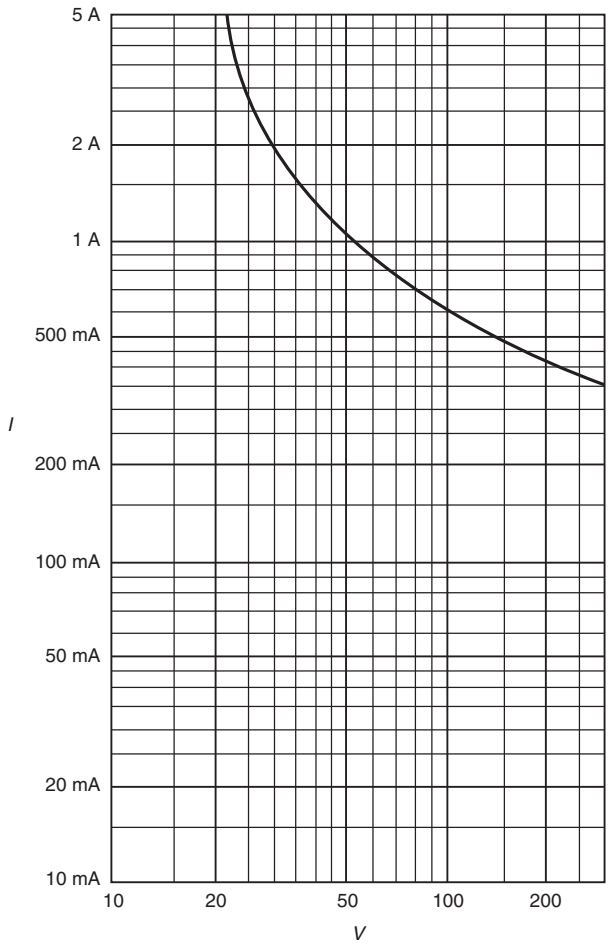

FIGURE 10.2.9.3(b) Resistance Circuits (L < 1 mH). Minimum igniting currents, applicable to circuits where cadmium, zinc, or magnesium can be excluded.

10.2.12* Direct Electrical Pathways to the Heart. The requirements of 10.2.12 shall apply only to manufacturers except where specifically noted.

10.2.12.1 Cardiac Electrodes.

10.2.12.1.1 General. Appliances that have isolated patient leads shall be labeled as having isolated patient leads in accordance with 10.2.13.5.

10.2.12.1.2* Insulation of Cardiac Leads. Pacemaker leads and other wires intended for insertion into the heart, together with their adapters and connections to appliances, shall be insulated except for their sensing or stimulation areas.

10.2.12.1.2.1 Metal stylets or guide wires temporarily introduced into a vein or artery for purposes of positioning a catheter shall not be required to be insulated.

10.2.12.1.2.2 When guide wires are inside the heart, the operator shall exercise extreme care to ensure safe use.

10.2.12.1.2.3 When guide wires are used in conjunction with electrical devices (e.g., positioning catheters by use of ECG recordings), they shall be insulated as required by 10.2.12.1.2.

10.2.12.1.2.4 Insulated wires designed to be introduced through a surgical needle, or other special wires where it is not practicable to maintain insulation, shall not be required to maintain insulation during introduction or manipulation. At such times the operator shall take appropriate safeguards.

10.2.12.1.3 Safety Requirements for Cardiac Electrodes. The electrode catheter, fitting, and associated appliance, when assembled, shall meet the applicable requirements of 10.2.13.5.

10.2.12.1.4 Insulation of Pacemaker Connections. Uninsulated or open-type connectors shall not be used for external cardiac pacemaker terminals.

10.2.12.2 Liquid-Filled Catheters.

10.2.12.2.1* Cardiac Catheter System. Any conductive element of a liquid catheter system that comes in contact with the liquid column shall be insulated from ground and sources of electric energy.

10.2.12.2.2 Nonconductive Cardiac Catheters. A nonconductive catheter containing a conductive liquid, when connected to its transducer, shall meet the applicable requirements of 10.2.13.5, for isolated patient leads, with the patient end of the liquid-filled catheter considered to be an electrode.

Copyright National Fire Protection Association
Provided by IHS under license with NFPA
No reproduction or networking permitted without license from IHS
Not for Resale

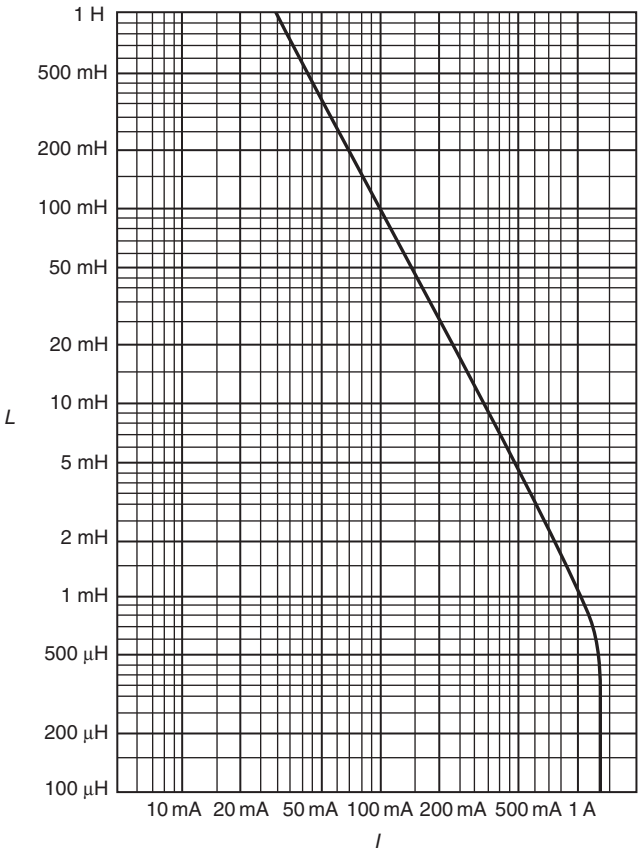

FIGURE 10.2.9.3(c) Inductance Circuits (L > 1 mH). Minimum igniting currents at 24 V, applicable to all circuits containing cadmium, zinc, or magnesium.

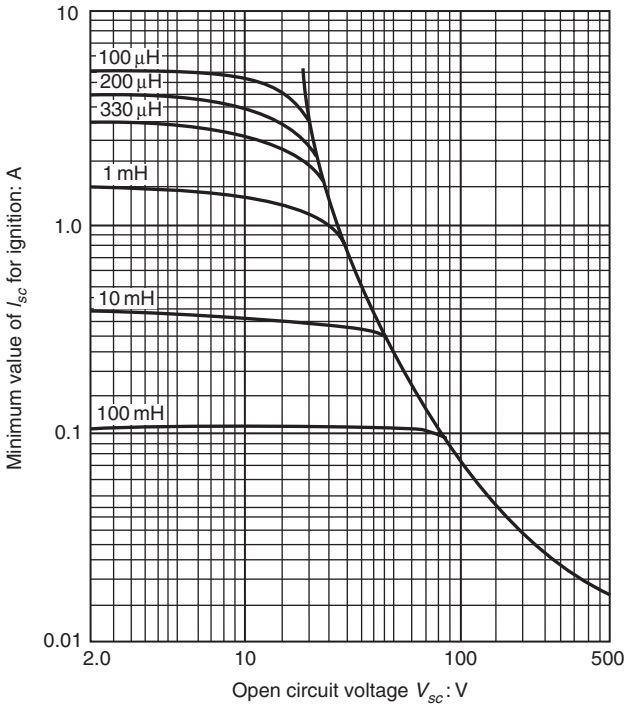

FIGURE 10.2.9.3(d) Inductance Circuits (L > 1 mH). Minimum igniting currents for various voltages, applicable to all circuits containing cadmium, zinc, or magnesium.

10.2.12.2.3 Conductive Cardiac Catheters.

10.2.12.2.3.1 If the liquid column is contained in a catheter made of conductive material having an electrical conductivity approximating that of blood, the system shall not require connection to an isolated patient lead.

10.2.12.2.3.2 Conductive catheters shall be identified.

10.2.12.3* Angiographic Catheters. Appliances used to inject contrast media into the heart or major vessels shall meet the same safety requirements as other liquid-filled catheter systems.

10.2.13 Manufacturers' Tests for Safety of Patient-Care–Related Electrical Appliances.

10.2.13.1* General. The appliance manufacturer shall perform the testing to ensure that each finished appliance will meet the specified test limits of 10.2.13.

10.2.13.2 Grounding Circuit Continuity — Measurement of Resistance. For appliances that are used in the patient care vicinity, the resistance between the appliance chassis or any exposed conductive surface of the appliance and the ground pin of the attachment plug shall be less than 0.15 ohm under the following conditions:

(1) The cord shall be flexed at its connection to the attachment plug or connector.
(2) The cord shall be flexed at its connection to the strain relief on the chassis during the resistance measurement.

10.2.13.3* Leakage Current Tests.

10.2.13.3.1 Techniques of Measurement. Each test shall be performed with the appropriate connection to a grounded ac power system.

10.2.13.3.2* Frequency of Leakage Current.

10.2.13.3.2.1 The leakage current limits stated in 10.2.13.4 and 10.2.13.5 shall be rms values for sinusoidal waveforms up to 1 kHz. For frequencies above 1 kHz, the leakage current limits shall be the values given in 10.2.13.4 and 10.2.13.5 multiplied by the frequency, in kHz, up to a maximum of 10 mA.

10.2.13.3.2.2 This "weighting" shall be achieved by a frequency-response–shaping network that precedes a flat response meter, or by a meter whose own frequency response characteristic matches 10.2.13.3.2.

10.2.13.3.3 Leakage Current in Relation to Polarity. Leakage current measurements shall be made as follows:

(1) With the polarity of the power line normal and reversed
(2) With the power switch of the appliance "on" and "off"
(3) With all operating controls in the positions to cause maximum leakage current readings

The leakage current limits in 10.2.13.4 and 10.2.13.5 shall not be exceeded under any of these conditions.

Copyright National Fire Protection Association
Provided by IHS under license with NFPA
No reproduction or networking permitted without license from IHS
Not for Resale

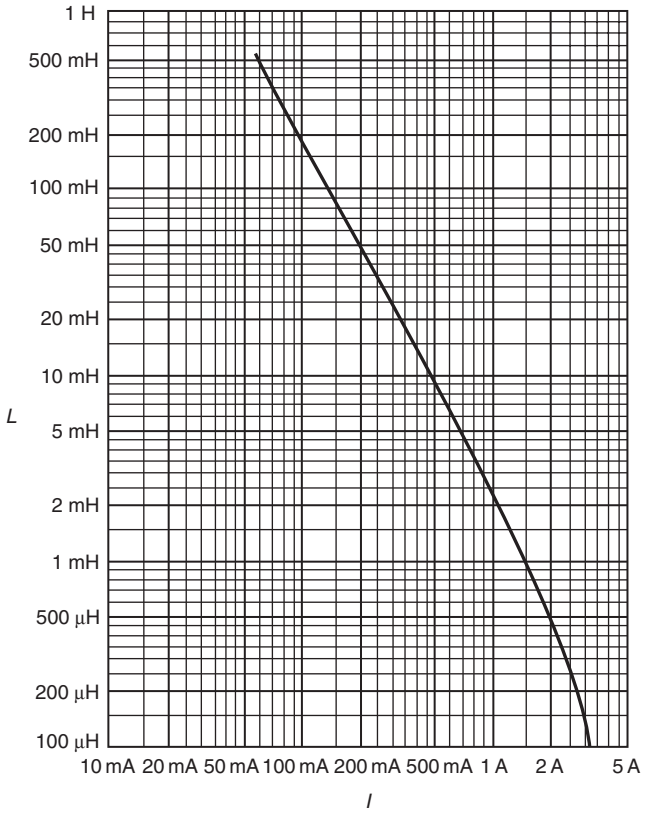

FIGURE 10.2.9.3(e) Inductance Circuits (L > 1 mH). Minimum igniting currents at 24 V, applicable only to circuits where cadmium, zinc, or magnesium can be excluded.

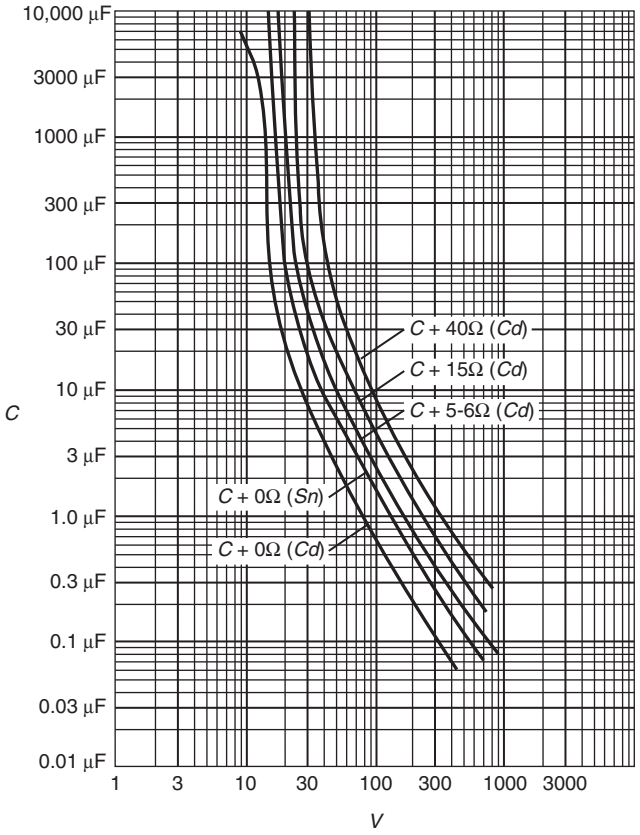

FIGURE 10.2.9.3(f) Capacitance Circuits Minimum Ignition Voltages. The curves correspond to values of current-limiting resistance as indicated. The curve marked *Sn* is applicable only where cadmium, zinc, or magnesium can be excluded.

10.2.13.4 Leakage Current from Appliance to Ground.

10.2.13.4.1 Test Methods. The current shall be measured from the exposed conductive surfaces of the appliance to ground with all grounding conductors open at the end nearest the power receptacle. The appliance shall not be grounded by any other means. The current meter shall be inserted between the exposed conductive surfaces and ground. This test shall be made under the conditions of 10.2.13.3 and shall be made as illustrated in Figure 10.2.13.4.1.

10.2.13.4.2 Appliances with No Exposed Conductive Surfaces. When the appliance has no exposed conductive surface, one shall be simulated by placing a 10 cm × 20 cm (3.9 in. × 7.8 in.) bare metal foil in intimate contact with the exposed surface. This shall be considered the "exposed metal surface" of the appliance, and all appropriate tests shall be performed to the foil.

10.2.13.4.3* Chassis Leakage Current Limits.

10.2.13.4.3.1 Cord-Connected Appliances. Cord-connected appliances that are intended for use in the patient care vicinity shall not exceed 300 µA of chassis leakage current as measured in 10.2.13.4.1.

10.2.13.4.3.2 Permanently Wired Equipment. Permanently wired equipment installed in the patient care vicinity shall not have leakage current from the frame to ground in excess of 5.0 mA. The leakage current shall be measured prior to installation by the installer and verified and accepted by the facility.

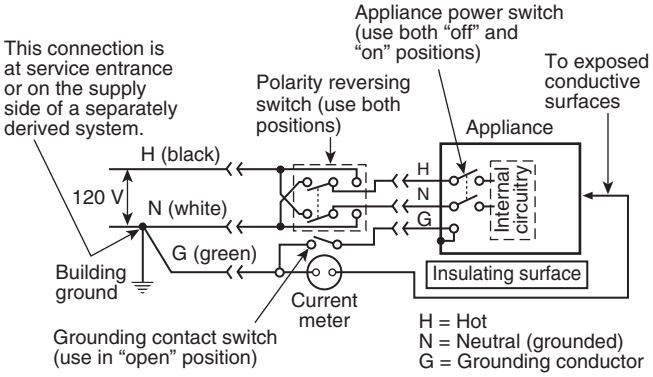

FIGURE 10.2.13.4.1 Test Circuit for Measuring Leakage Current from Exposed Conductive Surfaces.

This measurement shall be made in accordance with 10.2.13.4.1 while the equipment is temporarily insulated from ground.

10.2.13.5 Lead Leakage Current Tests and Limits.

10.2.13.5.1 Lead to Ground (Nonisolated Input).

10.2.13.5.1.1 The lead leakage current to ground shall be measured under the conditions of 10.2.13.3.

Copyright National Fire Protection Association
Provided by IHS under license with NFPA
No reproduction or networking permitted without license from IHS
Not for Resale

10.2.13.5.1.2 The test shall be made between each patient lead and ground and between the combined patient leads and ground.

10.2.13.5.1.3 The test shall be made with the patient leads active (e.g., in the case of a multilead instrument, the lead selector switch shall be advanced through all operating positions).

10.2.13.5.1.4 Each measurement shall be performed with the grounding conductors both opened and closed. For this purpose the grounding conductor shall be interrupted at the plug end of the appliance cord. Acceptable test configuration shall be as illustrated in Figure 10.2.13.5.1.4. The leakage current shall not exceed 100 μA.

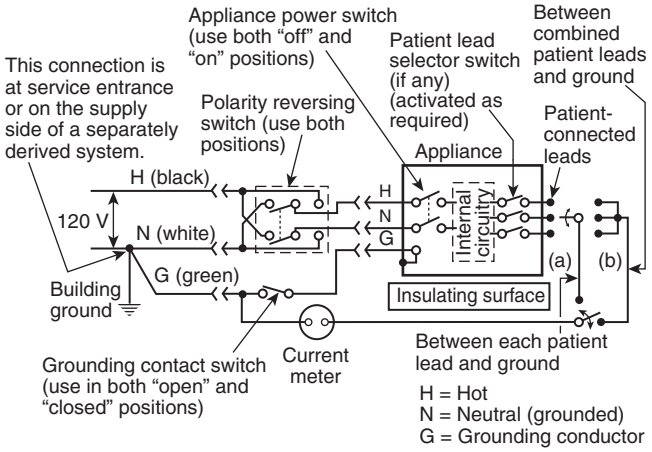

FIGURE 10.2.13.5.1.4 Test Circuit for Measuring Leakage Current Between Patient Leads and Ground (Nonisolated).

10.2.13.5.2 Lead to Ground (Isolated Input).

10.2.13.5.2.1 The leakage current to ground between each patient lead and ground shall be measured under the conditions of 10.2.13.3.

10.2.13.5.2.2 The test shall be made with the patient leads active (e.g., in the case of a multilead instrument, the lead selector switch shall be advanced through all operating positions).

10.2.13.5.2.3 Each measurement shall be performed with the grounding conductors both opened and closed. For this purpose the grounding conductor shall be interrupted at the plug end of the appliance cord. An acceptable test configuration shall be as illustrated in Figure 10.2.13.5.2.3. The leakage current shall not exceed 10 μA with the ground intact and 50 μA with the ground open.

10.2.13.5.3 Isolation Test (Isolated Input).

10.2.13.5.3.1 The isolation between each patient lead and ground for an appliance that has been labeled as having isolated patient leads shall be measured by observing the current produced by applying an external source of power-line frequency and voltage between the lead and ground while the leads are approximately 20 cm (8 in.) from a grounded conductive surface.

10.2.13.5.3.2 The isolation at the apparatus terminals to the patient cables shall be measured. An acceptable test configuration shall be as illustrated in Figure 10.2.13.5.3.2.

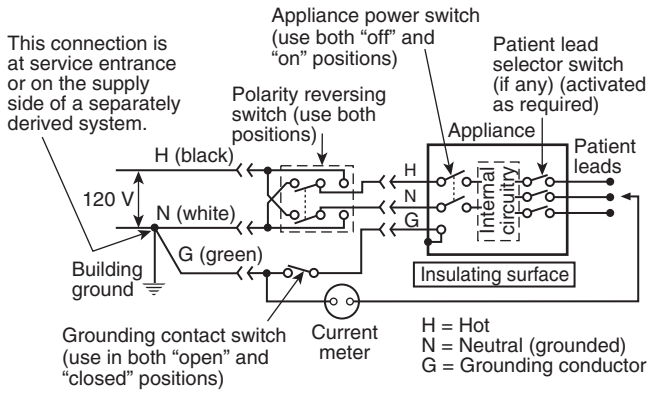

FIGURE 10.2.13.5.2.3 Test Circuit for Measuring Leakage Current Between Patient Leads and Ground (Isolated).

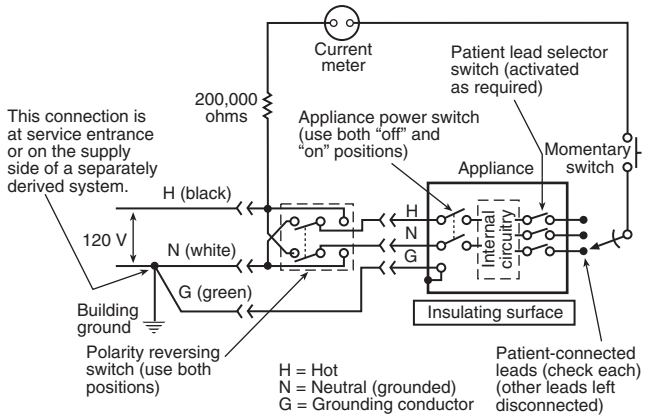

FIGURE 10.2.13.5.3.2 Test Circuit for Measuring the Electrical Isolation of Isolated Patient Leads.

10.2.13.5.3.3 At the patient end of the leads, the leakage current shall not exceed 50 μA and at the apparatus terminals, 25 μA.

10.2.13.5.3.4 Only appliances meeting the requirement of 10.2.13.5.3.3 shall be permitted to be identified as having isolated patient leads.

10.2.13.5.3.5 Safety precautions (such as including a resistance in series to limit the current, insulation of the meter, and a momentary switch) shall be taken to protect the operator. The following test procedures shall be followed for the indicated test conditions:

(1) In appliances without a power cord with ungrounded, exposed conductive surfaces, measurements shall be made with the exposed conductive surfaces temporarily grounded.
(2) If there is no exposed conductive surface, measurement shall be made with a simulated surface, as described in 10.2.13.4.2, that is also temporarily grounded.

Copyright National Fire Protection Association
Provided by IHS under license with NFPA
No reproduction or networking permitted without license from IHS
Not for Resale

10.2.13.5.4 Between Leads (Nonisolated Input).

10.2.13.5.4.1 The current between any pair of leads or any single lead and all others shall be measured under the conditions of 10.2.13.3. Each measurement shall be performed with the grounding conductors both opened and closed. For this purpose the grounding conductor shall be interrupted at the plug end of the appliance cord. An acceptable test configuration shall be as illustrated in Figure 10.2.13.5.4.1. The leakage current shall not exceed 50 μA.

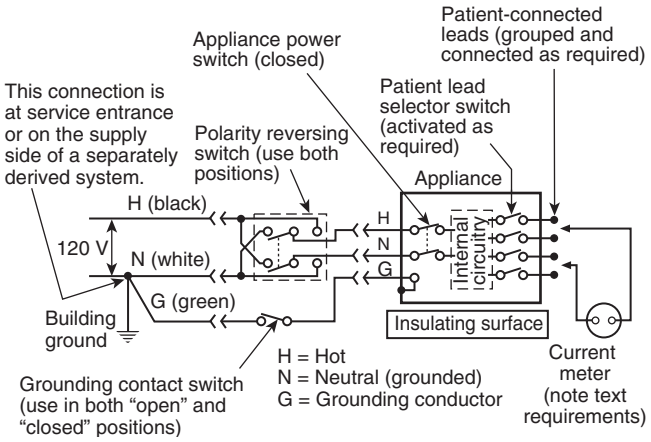

FIGURE 10.2.13.5.4.1 Test Circuit for Measuring Leakage Current Between Patient Leads (Nonisolated and Isolated).

10.2.13.5.4.2 Measuring leakage current between any single lead and all other leads shall be performed only to ensure the approval agency of design compliance.

10.2.13.5.5 Between Leads (Isolated Input).

10.2.13.5.5.1 The current between any pair of leads or any single lead and all others shall be measured under the conditions of 10.2.13.3. Each measurement shall be performed with the grounding conductors both opened and closed. For this purpose the grounding conductor shall be interrupted at the plug end of the appliance cord. An acceptable test configuration shall be as illustrated in Figure 10.2.13.5.4.1. The leakage current shall not exceed 10 μA with the ground intact and 50 μA with the ground open.

10.2.13.5.5.2 Measuring leakage current between any single lead and all other leads shall be performed only to ensure the approval agency of design compliance.

Chapter 11 Laboratories

11.1* Applicability.

11.1.1* This chapter establishes criteria to minimize the hazards of fire and explosions in laboratories, as defined in Chapter 3. This section is not intended to cover hazards resulting from the misuse of chemicals, radioactive materials, or biological materials that will not result in fires or explosions.

11.1.2 Many of the requirements to protect against fire or explosion, such as those for hood exhaust systems, also serve to protect persons from exposure to nonfire health hazards of these materials.

11.1.3* NFPA 45, *Standard on Fire Protection for Laboratories Using Chemicals*, is the basic NFPA standard for laboratories that covers the construction, ventilation systems, and related fire protection of all laboratories in all facilities. However, this chapter (Chapter 11) has more stringent requirements for laboratories located in health care facilities. Where interface with existing NFPA or other consensus codes and standards occurs, reference is made to the appropriate source in the text.

11.1.4 Where necessary, due to the special nature of laboratories, codes and standards are supplemented in this text so as to apply more specifically to buildings or portions of buildings devoted to laboratory usage.

11.2 Nature of Hazards.

11.2.1 Fire Loss Prevention.

11.2.1.1 Hazard Assessment.

11.2.1.1.1 An evaluation shall be made of hazards that may be encountered during laboratory operations before such operations are begun. The evaluation shall include hazards associated with following:

(1) Properties of the chemicals used
(2) Operation of the equipment
(3) Nature of the proposed reactions (e.g., evolution of acid vapors or flammable gases)

11.2.1.1.2 Periodic reviews of laboratory operations and procedures shall be conducted with special attention given to any change in materials, operations, or personnel.

11.2.1.1.3* Unattended operations and automatic laboratory equipment shall be provided with periodic surveillance or with automatic monitoring devices to detect and report abnormal operation.

11.2.1.1.4 When chemicals and reagents are ordered, steps shall be taken to determine the hazards and to transmit that information to those who will receive, store, use, or dispose of the chemicals.

11.2.1.2 Fire Prevention Procedures. Fire prevention procedures shall be established in accordance with Section 11.8.

11.2.1.3 Emergency Procedures.

11.2.1.3.1 Procedures for laboratory emergencies shall be developed, including the following:

(1) Alarm activation
(2) Evacuation
(3) Equipment shutdown

11.2.1.3.2 Procedures shall be developed for control of emergencies that could occur in the laboratory, including detailed plans for control operations by an emergency control group within the organization or a public fire department.

11.2.1.3.3 Emergency procedures shall be established for controlling chemical spills.

11.2.1.3.4* Emergency procedures shall be established for extinguishing clothing fires.

11.2.1.4 Orientation and Training.

11.2.1.4.1 New laboratory personnel shall be taught general safety practices for the laboratory and specific safety practices for the equipment and procedures they will use.

Copyright National Fire Protection Association
Provided by IHS under license with NFPA
No reproduction or networking permitted without license from IHS
Not for Resale

11.2.1.4.2 Continuing safety education and supervision shall be provided, incidents shall be reviewed monthly, and procedures shall be reviewed annually.

11.2.1.4.3* Fire exit drills shall be conducted at least quarterly.

11.2.1.4.4 Fire exit drills shall be so arranged that each person shall be included at least annually.

11.3 Structure.

11.3.1* Construction and Arrangement.

11.3.1.1* Construction of laboratories shall comply with the requirements of NFPA 45, *Standard on Fire Protection for Laboratories Using Chemicals*, NFPA *101*, *Life Safety Code*, and with the additional requirements of 11.3.1.1.1 and 11.3.1.1.2.

11.3.1.1.1 Health care laboratories that are not protected by an automatic extinguishing system and that are not classified by the authority having jurisdiction as a severe hazard shall be separated from surrounding health care areas and from exit access corridors by a fire barrier wall with a minimum 1-hour fire resistant rating, and all openings protected by 1 hour-rated assemblies.

11.3.1.1.2 Openings in a laboratory corridor barrier shall be permitted to be held open only by an automatic release device complying with the applicable requirements in NFPA *101*, *Life Safety Code*.

11.3.1.2 Interior finish in laboratories and means of egress shall comply with the applicable sections of NFPA *101*, *Life Safety Code*.

11.3.2 Exit Details.

11.3.2.1* Any room arranged for laboratory work that has an area in excess of 92.9 m^2 (1000 ft^2) shall have at least two exit access doors remote from each other, one of which shall open directly onto a means of egress.

11.3.2.2 A second means of access to an exit shall be provided for any laboratory work areas in which hazards exist as required by 3.4.1 of NFPA 45, *Standard on Fire Protection for Laboratories Using Chemicals*.

11.3.2.3 Travel distance between any point in a laboratory unit and an exit access door shall not exceed 22.9 m (75 ft).

11.3.2.4 Exit access doors from laboratories shall meet the requirements of NFPA *101*, *Life Safety Code*.

11.3.2.5 Laboratory corridors constituting access to an exit shall meet the requirements of NFPA *101*, *Life Safety Code*.

11.3.2.6 Corridors shall be maintained clear and unobstructed at all times.

11.3.2.7 Laboratory corridors, used for the transporting of patients in beds or litters, and constituting access to an exit, shall be not less than 243.8 cm (96 in.) in clear and unobstructed width.

11.3.3 Exhaust Air. Exhaust air shall conform to Section 6.3.

11.3.4* Ventilation. Ventilation shall comply with 6.4.2 and with the requirements of NFPA 45, *Standard on Fire Protection for Laboratories Using Chemicals*.

11.3.5 Fume Hoods. Fume hoods shall conform to 6.4.3 and 6.6.2.

11.4 Equipment.

11.4.1 General. Laboratory apparatus shall comply with the requirements of NFPA 45, *Standard on Fire Protection for Laboratories Using Chemicals*.

11.4.2 Equipment Employing Liquids.

11.4.2.1* Tissue processors and similar automatic equipment that release ignitable (flammable or combustible) vapors into the ambient workspace shall be operated at least 1.52 m (5 ft) from the storage of combustible materials, unless separated by 1-hour fire-resistive construction.

11.4.2.1.1 All new tissue processors and similar automatic equipment that release ignitable vapors shall be provided with the following safeguards and interlocks as part of a monitored audible and visual alarm:

(1) Low liquid level
(2) High vapor

11.4.2.1.2 The safeguards above shall be connected to an audible alarm in a constantly attended location.

11.4.2.2* Unattended laboratory operations employing flammable or combustible reagents shall be conducted in an area equipped with an automatic fire extinguishing system.

11.5* Fire Protection.

11.5.1* Automatic fire-extinguishing protection shall be provided in all laboratories, including associated storage rooms, under either of the following conditions:

(1) Laboratories are not separated from surrounding areas by at least 1-hour fire-resistive construction with door openings protected by Class C self-closing fire doors, and employ quantities of flammable, combustible, or hazardous materials less than that which would be considered severe.
(2) Laboratories are not separated from surrounding areas by at least 2-hour fire-resistive construction with door openings protected by Class B self-closing doors, and employ quantities of flammable, combustible, or hazardous materials considered severe.

11.5.2 Automatic fire extinguishment and fire detection systems, where required, shall be connected to the facility fire alarm system and shall be arranged to immediately sound an alarm.

11.5.3 Portable fire extinguishers suitable for the particular hazards shall be located so that they will be readily available to personnel in accordance with NFPA 10, *Standard for Portable Fire Extinguishers*.

11.5.4 Clinical laboratories that typically employ quantities of flammable, combustible, or hazardous materials less than that which would be classified by the authority having jurisdiction as severe shall be defined as ordinary hazard per NFPA 10 for purposes of extinguisher placement.

11.6* Emergency Shower. Where the eyes or body of any person can be exposed to injurious corrosive materials, suitable fixed facilities for quick drenching or flushing of the eyes and body shall be provided within the work area for immediate emergency use.

11.6.1 Fixed eye baths shall be designed and installed to avoid injurious water pressure.

Copyright National Fire Protection Association
Provided by IHS under license with NFPA
No reproduction or networking permitted without license from IHS
Not for Resale

11.6.2 If shutoff valves or stops are installed in the branch line leading to safety drenching equipment, the valves shall be as follows:

(1) OS & Y (outside stem and yoke)
(2) Labeled for identification
(3) Sealed in the open position

11.6.3 The installation of wall-mounted portable eye-wash stations shall not preclude the adherence to the provisions of Section 11.6.

11.7 Flammable and Combustible Liquids.

11.7.1 General. Flammable and combustible liquids shall be handled and used with care and with knowledge of their hazardous properties, both individually and in combination with other materials with which they can come in contact.

11.7.2* Storage and Use.

11.7.2.1* Flammable and combustible liquids shall be used from and stored in approved containers in accordance with NFPA 30, *Flammable and Combustible Liquids Code*, and NFPA 45, *Standard on Fire Protection for Laboratories Using Chemicals*.

11.7.2.2 Storage cabinets for flammable and combustible liquids shall be constructed in accordance with Section 4.3 of NFPA 30, *Flammable and Combustible Liquids Code*.

11.7.2.3* In laboratories not classified by the authority having jurisdiction as very small work areas, established laboratory practice shall limit working supplies of flammable or combustible liquids.

11.7.2.3.1 The total volume of Class I, II, and IIIA liquids outside of approved storage cabinets and safety cans shall not exceed 3.78 L (1 gal) per 9.29 m^2 (100 ft^2).

11.7.2.3.2 The total volume of Class I, II, and IIIA liquids, including those contained in approved storage cabinets and safety cans, shall not exceed 7.57 L (2 gal) per 9.29 m^2 (100 ft^2).

11.7.2.3.3 No flammable or combustible liquid shall be stored or transferred from one vessel to another in any exit access corridor or passageway leading to an exit.

11.7.2.3.4 Approved flammable or combustible inside liquid storage area(s) designed, constructed, and operated in accordance with NFPA 30, *Flammable and Combustible Liquids Code*, shall be available within any health care facility regularly maintaining a reserve storage capacity in excess of 1135.5 L (300 gal).

11.7.2.3.5 Quantities of flammable and combustible liquids for disposal shall be included in the total inventory.

11.7.2.4 Venting of storage cabinets shall be permitted.

11.7.2.4.1 Storage cabinets with approved flame arresters shall be permitted to be exhausted through a fume hood exhaust system.

11.7.2.4.2 Construction of the venting duct within the laboratory shall be equal to the rating of the cabinet.

11.7.2.5 Flammable or combustible liquids shall not be positioned as follows:

(1) Near Bunsen burners
(2) Near ovens
(3) Near hot pipes and valves
(4) Near other sources of heat
(5) In corridors

11.7.2.6* Class I flammable liquids shall not be stored in ordinary refrigerators, freezers, or coolers.

11.7.2.6.1 If Class I flammable liquids are stored under refrigeration (e.g., for analytical purposes), the storage devices shall be listed flammable materials storage refrigerators or refrigerators listed for Class I, Division 1, Group C locations in accordance with NFPA 70, *National Electrical Code*.

11.7.2.6.2 The outside doors of refrigerators shall be labeled to denote whether or not they are acceptable for storage of flammable liquids.

11.7.2.6.3 If the refrigerator is not listed for the purpose, the warning shall be worded to prohibit all storage of flammable liquids.

11.7.3 Transfer of Flammable or Combustible Liquids. Transfer from bulk stock containers to smaller containers shall be made in storage rooms as described in NFPA 30, *Flammable and Combustible Liquids Code*, or within a fume hood having a face velocity of at least 30.5 m (100 ft) per minute.

11.7.4 Handling of Flammable and Combustible Liquids.

11.7.4.1 Flammable liquids and combustible liquids with flash points lower than 93.3°C (200°F) (Class I, II, and IIIA liquids) shall be heated in hoods or with special local exhaust ventilation if the quantities exceed 10 mL, or if the liquid is heated to within 16.6°C (30°F) of the flash point of the liquid.

11.7.4.2 Heating Flammable or Combustible Liquids.

11.7.4.2.1 Flammable or combustible liquids shall be heated with hot water, steam, or an electric mantle, depending upon their boiling points.

11.7.4.2.2 Open flames shall not be employed.

11.7.5* Disposal of Hazardous Materials. Disposal of hazardous materials shall be accomplished off the premises by a disposal specialist or at a safe location away from the health care facility by competent personnel using procedures established in concurrence with the authority having jurisdiction.

11.8* Maintenance and Inspection.

11.8.1* Procedures.

11.8.1.1* A safety officer shall be appointed to supervise safe practices in the laboratory.

11.8.1.1.1 Responsibilities shall include ensuring that the equipment and preparation for fire fighting are appropriate for the special fire hazards present.

11.8.1.1.2 These responsibilities shall be in addition to surveillance of hazards attendant to the following:

(1) Caustics
(2) Corrosives
(3) Compressed gases
(4) Electrical installations
(5) Other hazards indigenous to laboratories in health care facilities

11.8.1.1.3 The safety officer shall also supervise the periodic education of laboratory personnel including the following:

(1) New employee orientation
(2) The nature of combustible and flammable liquids and gases
(3) First aid
(4) Fire fighting
(5) The use of protective equipment
(6) Unsafe conditions observed or reported

Copyright National Fire Protection Association
Provided by IHS under license with NFPA
No reproduction or networking permitted without license from IHS
Not for Resale

11.8.1.1.4 The laboratory safety officer shall prepare and supervise the proper completion of a safety checklist that can be preserved for the record.

11.8.1.2* The laboratory safety officer shall supervise operations and equipment related to safe operations and practices, including such items as the following:

(1) Ventilating provisions
(2) Fire protection apparatus
(3) Periodic flushing of sinks, emergency showers, and eye wash units
(4) Shelf stocks and storage of flammable and combustible materials and caustic and corrosive liquids shall be reviewed at appropriate, regular intervals

11.8.1.2.1 A system of prompt reporting of defective equipment and its prompt repair shall be instituted, and periodic inspections shall be made of all electrical and gas equipment.

11.8.1.2.2 Periodic inspection shall be made of all electrical and gas equipment.

11.8.1.3 Periodic safety inspection shall include the testing of all emergency showers, eye baths, and other emergency equipment.

11.8.1.4* There shall be a written procedure for the disposal of hazardous waste in accordance with local, state, and federal hazardous material and waste regulations.

11.8.2 Identification of Hazards.

11.8.2.1* All doors leading to laboratories in health-related facilities shall be marked with signage indicating the fire hazards of materials when significant quantities, as defined below, are intended to be used within the area.

11.8.2.2 For signage purposes, "significant quantities" in an area shall include any of the following:

(1) Hazardous materials in glass containers that are 3.8 L (1 gal) in size or larger
(2) Compressed gases or cryogenic liquids in containers that are greater than 12.7 cm (5 in.) in diameter and 38 cm (15 in.) in length
(3) Dry hazardous chemicals in containers in excess of 2.27 kg (5 lb)
(4) Aggregate quantities of hazardous materials exceeding 91 kg (200 lb), or flammable liquids exceeding 38 L (10 gal)

11.8.2.3* All doors leading to laboratories, laboratory work areas, and laboratory storage areas shall be identified with signs to warn emergency response personnel of unusual or severe hazards that are not directly related to the fire hazards of contents.

11.8.2.4 It shall be the responsibility of the laboratory safety officer to ensure periodically that the signage properly indicates the nature of the materials being used within the identified space.

11.8.2.5 It shall be the duty of the senior person responsible for activities in respective laboratory areas to inform the laboratory safety officer of changes in protocol and procedures that involve variations in the fire and associated hazards of materials used in individual spaces.

11.9 Transfer of Gases.

11.9.1 Transfer of gaseous oxygen shall be in accordance with 9.6.2.2.

11.9.2 Transfer of all other gases from one cylinder to another within the laboratory shall be prohibited.

11.9.3 Transfer of liquid oxygen shall be in accordance with 9.6.2.3.

11.10 Laboratory Gas Cylinder Storage for Nonpiped Use.

11.10.1 Cylinder and Container Management. Requirements shall be in accordance with 5.1.3.1.1.

11.10.2 Storage Requirements (Location, Construction, Arrangement; Any Quantity; Flammable and Nonflammable Gases).

11.10.2.1 Storage shall be in cylinders complying with 5.1.3.1.1.

11.10.2.2 Flammable gas cylinder storage for a laboratory, if inside any health care facility, shall be in a separate room or enclosure with the following characteristics:

(1) Reserved exclusively for that purpose
(2) Having a fire-resistance classification of at least 2 hours
(3) Ventilated *(See E.6.8 of Annex E.)*

11.10.2.2.1 When a laboratory is intended to be routinely and frequently operated with flammable gases supplied from a manifold compressed system, storage shall comply with 11.11.1.1.

11.10.2.2.2 Cylinders in storage shall be kept in racks or secured in position.

11.10.2.3 Rooms or enclosures for storage of cylinders shall be well ventilated.

11.10.2.4 Electrical equipment in flammable-gas storage areas shall comply with NFPA 70, *National Electrical Code*, for Class I, Division 2 locations.

11.10.2.5 Enclosures for storage of nonflammable gases shall have at least 1-hour fire-resistive construction, in accordance with 5.1.3.3.2.

11.10.2.6* Use of Gases. Gases shall be handled and used with care and with knowledge of their hazardous properties, both individually and in combination with other materials with which they can come in contact. *(See NFPA 49, Hazardous Chemicals Data, and NFPA 491, Guide to Hazardous Chemical Reactions.)*

11.10.2.7 Cylinders. In a laboratory, gas cylinders being held for prompt use shall not exceed 2 days' working needs, except as permitted in 11.11.1.1. Cylinders shall be in racks or secured in position.

11.10.2.8 Working Supplies. The aggregate accumulation of cylinders at any one working station shall not exceed one extra cylinder for each cylinder actually connected for use. All cylinders shall be secured in a rack or secured in an upright position.

11.10.3 The total quantity and size of cylinders containing oxygen, flammable gas, liquefied flammable gas, and gas with Health Hazard Ratings of 3 or 4 shall comply with Chapter 8 of NFPA 45, *Standard on Fire Protection for Laboratories Using Chemicals.*

11.10.4 The number of reserve cylinders within general laboratory work areas shall not exceed one week's working supply.

Copyright National Fire Protection Association
Provided by IHS under license with NFPA
No reproduction or networking permitted without license from IHS
Not for Resale

11.11 Piped Gas Systems.

11.11.1 Source.

11.11.1.1 When a laboratory is intended to be routinely and frequently operated with flammable gases supplied from a manifold compressed system, the containers shall meet either of the following requirements:

(1) Be in a separate room having a fire-resistance classification of at least 1 hour and be ventilated in accordance with 5.1.3.3.2, and 5.1.3.3.3
(2) Be located outside of the building and connected to the laboratory equipment by a permanently installed piping system

11.11.1.1.1 Wherever the volume and nature of the gas, in the judgment of the laboratory safety officer or other authority having jurisdiction, do not offer a hazard, the requirement for the remote locations of the cylinder in 11.11.1.1 shall be permitted to be waived.

11.11.1.2 A laboratory intended to be routinely and frequently operated with nonflammable gases supplied from a manifold compressed system shall meet the following requirements:

(1) The manifold within the laboratory shall consist of not more than six cylinders.
(2) Manifolds larger than six cylinders shall conform to 11.11.1.1.
(3) Cylinders shall be secured in position.

11.11.1.3 A pressure-reducing valve shall be connected to each gas cylinder and adjusted to a setting to limit pressure in the piping system at the minimum required gas pressure.

11.11.1.4 Pressure regulators shall be compatible with the gas for which they are used.

11.11.1.5 Piping systems shall not be used for gases other than those for which they are designed and identified.

11.11.1.5.1 If a system is to be converted for use with a gas other than that for which it was originally installed, the following procedure shall be performed:

(1) It shall be inspected for suitability for the proposed gas.
(2) It shall be purged with an inert gas (such as nitrogen).
(3) It shall be cleaned when oil, grease, or other readily oxidizable materials are present.
(4) It shall be pressure tested in accordance with the appropriate piping standard.

11.11.1.5.2 Each outlet of such a system shall be identified by chemical name and specifically converted for use with the successor gas.

11.11.2 Distribution.

11.11.2.1* Piping systems for fuel gases, such as manufactured gas, natural gas, and LP-Gas, shall comply with NFPA 54, *National Fuel Gas Code*, and NFPA 58, *Liquefied Petroleum Gas Code*.

11.11.2.2 Piping systems for gaseous hydrogen shall comply with NFPA 50A, *Standard for Gaseous Hydrogen Systems at Consumer Sites*.

11.11.2.3 Piping systems for nonflammable gases shall comply with Level 1 gas systems as specified in Chapter 5.

11.11.2.4 Piping systems for acetylene shall comply with NFPA 51, *Standard for the Design and Installation of Oxygen–Fuel Gas Systems for Welding, Cutting, and Allied Processes*.

11.11.2.5 Supply and discharge terminals of piping systems shall be legibly and permanently marked at both ends with the name of the gas piping, after testing, to establish their content and continuity.

11.11.3 Piped Vacuum Systems. See 5.1.3.6.

11.11.3.1 Source. (Reserved)

11.11.3.2* Distribution. Where only one set of vacuum pumps is available for a combined medical–surgical vacuum system and an analysis, research, or teaching laboratory vacuum system, such laboratories shall be connected separate from the medical–surgical system directly to the receiver tank through its own isolation valve and fluid trap located at the receiver. Between the isolation valve and fluid trap, a scrubber shall be permitted to be installed.

11.11.4 Piped WAGD Systems. (Reserved)

11.11.5 Performance Criteria and Testing (Gas, Vacuum, WAGD).

11.11.5.1 Piped Gas Systems. Piped gas systems shall be tested in accordance with 5.1.12.

11.11.5.2 Piped Vacuum Systems. (Reserved)

11.11.5.3 WAGD Systems. (Reserved)

11.11.6 Administration. (Reserved)

Chapter 12 Health Care Emergency Management

12.1* Applicability.

12.1.1 This chapter is applicable to any health care facility that is intended to provide medical care during an emergency or maintain services for patients during a disaster and for the protection of visitors and staff.

12.1.2* This chapter provides those with the responsibility for the emergency management program in health care facilities with a framework to assess, mitigate, prepare for, respond to, and recover from disasters of any origin. This chapter is intended to aid in developing, maintaining, and evaluating effective emergency management programs. For additional information on emergency management programs, see NFPA 1600, *Standard on Disaster/Emergency Management and Business Continuity Programs*.

12.2 Responsibilities.

12.2.1* Authority Having Jurisdiction (AHJ). The authority having jurisdiction shall be cognizant of the requirements of a health care facility with respect to its uniqueness for continued operation of the facility in an emergency.

12.2.2 Senior Management. Each health care organization shall have plans necessary to respond to a disaster or an emergency. Each health care organization shall have an individual or group, often known as an emergency management committee, as appropriate, with the authority for developing, implementing, exercising, and evaluating the emergency management program.

12.2.3* Emergency Management Committee.

12.2.3.1* The emergency management committee shall have the responsibility for the emergency management program within the facility, under the supervision of designated leader-

Copyright National Fire Protection Association
Provided by IHS under license with NFPA
No reproduction or networking permitted without license from IHS
Not for Resale

ship. The program shall be based on realistic conceptual events and operating capacity thresholds.

12.2.3.2* The emergency management committee shall model the emergency operations plan on an incident command system (ICS) in coordination with local emergency response agencies.

12.3 General Requirements.

12.3.1* When a facility declares itself in a disaster mode, or when the authority having jurisdiction declares that a state of disaster exists, the emergency operations plan shall be activated.

12.3.2* The decision to activate the emergency operations plan shall be made by the authority designated within the plan, in accordance with the facility's activation criteria. The decision to terminate shall be made by the designated authority in coordination with the authority having jurisdiction and other civil or military authorities involved.

12.3.3 The emergency operations plan, as a minimum, shall include the components detailed in 12.3.3.1 through 12.3.3.8 and training and drills (12.3.3.9 and 12.3.3.10) as necessary for effectiveness.

12.3.3.1* Identification of Emergency Response Personnel. All personnel designated or involved in the emergency operations plan of the health care facility shall be supplied with a means of identification, which shall be worn at all times in a visible location. Specific means of identification for incident command system (ICS) personnel shall be provided, such as vests, baseball caps, or hard hats.

12.3.3.2* Continuity of Essential Building Systems. When designated by the emergency operations plan to provide continuous service in a disaster or emergency, health care facilities shall establish contingency plans for the continuity of essential building systems, as applicable:

(1)*Electricity
(2) Water
(3) Ventilation
(4) Fire protection systems
(5) Fuel sources
(6) Medical gas and vacuum systems (if applicable)
(7)*Communication systems

12.3.3.3* Staff Management. Planning shall include the alerting and managing of all staff and employees in a disaster, as well as consideration of all of the following:

(1) Housing
(2) Transportation of staff and staff family
(3) Critical incident stress management

12.3.3.4* Patient Management. Planning shall include provisions for management of patients, particularly with respect to clinical and administrative issues.

12.3.3.5* Logistics. Planning for disasters shall include as a minimum stockpiling or ensuring immediate or at least uninterrupted access to critical materials such as the following:

(1) Pharmaceuticals
(2) Medical supplies
(3) Food supplies
(4) Linen supplies
(5) Industrial and potable (drinking) waters

12.3.3.6* Security. Security plans shall be developed to meet the needs of the facility.

12.3.3.7* Public Affairs.

12.3.3.7.1 Health care facilities shall have a designated media spokesperson to facilitate news releases.

12.3.3.7.2 An area shall be designated where media representatives can be assembled, where they will not interfere with the operations of the health care facility.

12.3.3.8* Operational Recovery. Plans shall reflect measures needed to restore operational capability to pre-disaster levels. Fiscal aspects shall be considered because of restoration costs and possible cash flow losses associated with the disruption.

12.3.3.9 Staff Education.

12.3.3.9.1 Each health care facility shall implement an educational program. This program shall include an overview of the components of the emergency management program and concepts of the incident command system. Education concerning the staff's specific duties and responsibilities shall be conducted.

12.3.3.9.2 General overview education of the emergency management program and the incident command system shall be conducted at the time of hire. Department/staff specific education shall be conducted upon reporting to their assignments or position and annually thereafter.

12.3.3.10* Drills. Each organizational entity shall implement two or more specific responses of the emergency operations plan during each year, at least one of which shall rehearse mass casualty response for health care facilities with emergency services, disaster receiving stations, or both.

Chapter 13 Hospital Requirements

13.1 Applicability. This chapter applies to hospitals as defined in Chapter 3. As used in this chapter, the term *hospital* (except where it obviously refers to the physical structure) shall mean the entity and that portion of its internal governing structure that has the responsibility for the elements of hospital operation covered by this chapter, including building design, purchasing specifications, inspection procedures, maintenance schedules, and training programs affecting such use.

13.2* Responsibilities. The governing body of hospitals shall have the responsibility of protecting the facilities (for patient care and clinical investigation) and the personnel employed therein.

13.2.1 Governing Body. To achieve the performance criteria of Chapters 1 through 12, the governing body of the hospital shall be permitted to assign responsibility to appropriate hospital personnel, consultants, architects, engineers, or others.

13.2.2 Policies. The hospital shall ensure that policies are established and maintained that permit the attending physician to satisfy the emergency needs of any patient that could supersede the requirements of this chapter. Each such special use shall be clearly documented and reviewed to attempt to have future similar needs met within the requirements of this chapter.

13.2.3 Electricity. It shall be the responsibility of the hospital to provide an environment that is reasonably safe from the shock and burn hazards that are attendant with the use of electricity in patient care areas.

13.2.3.1 The hospital shall establish policies and procedures related to the safe use of electric appliances.

Copyright National Fire Protection Association
Provided by IHS under license with NFPA
No reproduction or networking permitted without license from IHS
Not for Resale

13.2.3.2 Each hospital shall be permitted to select a specific electrical safety program that is appropriate to its particular needs.

13.2.3.3 The physical protection afforded by the installation of an electrical distribution system that meets the requirements of this chapter and the purchase of properly constructed and tested appliances shall be augmented by having designated departments of the facility assume responsibility for the continued functioning of the electrical distribution system *(see Chapter 4)* and the inspection, testing, and maintenance of electrical appliances *(see Chapter 8)*.

13.2.3.3.1 The hospital shall adopt regulations and practices concerning the use of electric appliances and shall establish programs for the training of physicians, nurses, and other personnel who might be involved in the procurement, application, use, inspection, testing, and maintenance of electrical appliances for the care of patients.

13.2.4 Patient Care Areas. Areas of a hospital in which patient care is administered are classified as general care areas or critical care areas, either of which shall be permitted to be classified as a wet location. The governing body of the facility shall designate the following areas in accordance with the type of patient care anticipated and with the following definitions of the area classification *(see definition of Patient Care Area in Chapter 3)*:

(1) General Care Area *(see Chapter 3)*
(2) Critical Care Area *(see Chapter 3)*
(3) Wet Location *(see Chapter 3)*

13.2.5 Anesthesia. It shall be the responsibility of the governing body of the hospital to designate anesthetizing locations.

13.3 General Requirements.

13.3.1 Reserved.

13.3.2 Reserved.

13.3.3 Reserved.

13.3.4 Electrical System Requirements.

13.3.4.1 Electrical Distribution System. The electrical distribution system for patient care areas shall conform to the requirements in Chapter 4, Electrical Systems. These requirements shall apply to new construction. Existing installations shall not need to be modified, provided that they meet the operational safety requirements in 4.3.3.2 and 4.3.3.3.

13.3.4.2 Essential Electrical Distribution System. The essential electrical distribution system shall conform to a Type 1 system, as described in Chapter 4.

13.3.4.3 Hospitals shall be permitted to serve the essential electrical system needs of contiguous or same-site facilities with the generating equipment of the hospital.

13.3.5 Gas and Vacuum System Requirements.

13.3.5.1 General. Where medical gas, instrument air, vacuum, and WAGD systems are installed they shall conform to the requirements for the appropriate level. Systems conforming to different levels within the same building shall be permitted. The appropriate level shall be determined as follows:

(1) All systems shall comply to Level 1 if any part of the systems are Level 1, except where both of the following apply:
   (a) The system(s) is entirely separate from the Level 1 system(s) (i.e., is stand-alone) and is not connected to Level 1 sources or distribution pipelines.
   (b) The occupancy to be served and the function of that occupancy is distinct from other occupancies in the building.
(2) Medical gas and vacuum systems shall be permitted to be Level 2 systems only where the following apply:
   (a) Paragraphs 13.3.5.1(1)(a) and 13.3.5.1(1)(b) apply.
   (b) Patients served by the system(s) are not dependent on mechanical ventilation or assisted mechanical ventilation at any time, including during administration of anesthesia.
(3) Medical gas and vacuum systems shall be permitted to be Level 3 systems only where the following apply:
   (a) Paragraphs 13.3.5.1(1)(a) and 13.3.5.1(1)(b) and 13.3.5.1(2)(b) apply.
   (b) The patient population, during or subsequent to treatment, are not dependent for life on the gases or vacuum system(s), and the treatment(s) that the facility will perform can be completed without detrimental effect on patient outcomes in the event of sudden loss of the gas or vacuum system(s).
   (c) *The total of all gases in cylinders or containers, except nitrogen, connected and in storage at one time does not exceed 85 m^3 (3000 ft^3) at standard temperature and pressure (STP), except that 142 m^3 (5000 ft^3) (STP) shall be permitted if oxygen is stored in a DOT Specification 4L (cryogenic liquid) cylinder.
   (d) The system(s) supplies not more than two adjoining single treatment facilities.

13.3.5.2 Where nitrous oxide or halogenated agents are intended to be administered, a patient WAGD shall be installed and conform to Level 1 WAGD systems in Chapter 5.

13.3.6* Environmental System Requirements. (Reserved)

13.3.7 Material Requirements. (Reserved)

13.3.8 Electrical Equipment Requirements.

13.3.8.1* Patient Care Areas. Electrical appliances shall conform to Chapter 8.

13.3.8.2* Laboratories. Equipment shall conform to the nonpatient electrical equipment requirements in Chapter 8.

13.3.9 Gas Equipment Requirements.

13.3.9.1 Patient. Equipment shall conform to the patient equipment requirements in Chapter 9.

13.3.9.2 Nonpatient. Equipment shall conform to the nonpatient equipment requirements in Chapter 9.

13.3.10 Reserved.

13.3.11* Laboratories. Laboratories in hospitals shall comply with the requirements of Chapter 11 as applicable and the requirements of NFPA 45, *Standard on Fire Protection for Laboratories Using Chemicals*, as applicable.

13.3.12 Emergency Management. Hospitals shall comply with the provisions of Chapter 12 for emergency management planning, as appropriate.

Copyright National Fire Protection Association
Provided by IHS under license with NFPA
No reproduction or networking permitted without license from IHS
Not for Resale

13.4* Specific Area Requirements.

13.4.1 Anesthetizing Locations.

13.4.1.1 General.

13.4.1.1.1 Scope.

13.4.1.1.1.1 The purpose of 13.4.1 is to establish performance and maintenance criteria for anesthetizing locations and for equipment and facilities ancillary thereto in order to safeguard patients and health care personnel from fire, explosion, electrical, and related hazards associated with the administration of inhalation anesthetics.

13.4.1.1.1.2 Subsection 13.4.1 applies to all anesthetizing locations and related storage areas within hospitals in which inhalation anesthetics are administered.

13.4.1.1.1.3 Subsection 13.4.1 is intended to provide requirements to protect against explosions or fires, electric shock, mechanical injury from compressed gases or compressed gas cylinders, or anoxia from erroneous gas connections and similar hazards, without unduly limiting the activities of the surgeon or anesthesiologist. This principle, without minimizing any of the aforementioned dangers, recognizes that the physicians shall be guided by all the hazards to life that are inherent in surgical procedures carried out in anesthetizing locations.

13.4.1.1.1.4 Subsection 13.4.1 does not cover animal operative facilities unless the animal operative facility is integral to a hospital.

13.4.1.1.1.5 The provisions of 13.4.1 do not apply to the manufacture, storage, transportation, or handling of inhalation anesthetics prior to delivery to the consuming health care facility. They do not apply to any use other than in an anesthetizing location and related storage areas.

13.4.1.1.2 Purpose. Subsection 13.4.1 contains the requirements for administration and maintenance that shall be followed as an adjunct to physical precautions specified in 13.4.1.2.

13.4.1.1.3* Recognition of Hazards and Responsibility.

13.4.1.1.3.1 Inasmuch as the ultimate responsibility for the care and safety of patients in a hospital belongs to the governing board of the hospital, that body, in its responsibility for enforcement of requirements contained in this chapter, shall determine that adequate regulations with respect to anesthesia practices and conduct in anesthetizing locations have been adopted by the medical staff of the hospital and that adequate regulations for inspection and maintenance are in use by the administrative, nursing, and ancillary personnel of the hospital.

13.4.1.1.3.2 By virtue of its responsibility for the professional conduct of members of the medical staff of the hospital, the organized medical staff shall adopt regulations with respect to the use of inhalation anesthetic agents and to the prevention of electric shock and burns *(see C.13.3)* and through its formal organization shall ascertain that these regulations are regularly adhered to.

13.4.1.1.3.3 In meeting its responsibilities for safe practices in anesthetizing locations, the hospital administration shall adopt or correlate regulations and standard operating procedures to ensure that both the physical qualities and the operating maintenance methods pertaining to anesthetizing locations meet the standards set in this chapter. The controls adopted shall cover the conduct of professional personnel in anesthetizing locations, periodic inspection to ensure the proper grounding of dead metal *(see 4.3.3.2)*, and inspection of all electrical equipment, including testing of line isolation monitors.

13.4.1.1.4 Rules and Regulations.

13.4.1.1.4.1 Hospital authorities and professional staff shall jointly consider and agree upon necessary rules and regulations for the control of personnel concerned with anesthetizing locations. Upon adoption, rules and regulations shall be prominently posted in the operating room suite. Positive measures shall be necessary to acquaint all personnel with the rules and regulations established and to ensure enforcement.

13.4.1.1.4.2* The hazard symbols contained in NFPA 704, *Standard System for the Identification of the Hazards of Materials for Emergency Response*, shall be employed throughout the hospital, as appropriate.

13.4.1.2 Requirements for ALL Anesthetizing Locations.

13.4.1.2.1 Ventilation. Ventilation of anesthetizing locations shall conform to 6.4.1 and 6.6.1.

13.4.1.2.2 Germicides.

13.4.1.2.2.1 Medicaments, including those dispersed as aerosols, shall be permitted to be used in anesthetizing locations for germicidal purposes, for affixing plastic surgical drape materials, for preparation of wound dressing, or for other purposes.

13.4.1.2.2.2 Liquid germicides used in anesthetizing locations, whenever the use of cautery or electrosurgery is contemplated, shall be nonflammable.

13.4.1.2.2.3* Whenever flammable aerosols are employed, sufficient time shall be allowed to elapse between deposition and application of drapes to permit complete evaporation and dissipation of any flammable vehicle remaining.

13.4.1.2.3 Smoking and Open Flames. Smoking and open flames shall be prohibited in all anesthetizing locations.

13.4.1.2.4* Electrical Safeguards.

13.4.1.2.4.1 Scheduled inspections and written reports shall be maintained.

13.4.1.2.4.2 Rules to require prompt replacement of defective electrical equipment shall be adopted and rigidly enforced.

13.4.1.2.4.3 Personnel working in anesthetizing locations shall be instructed in these electrical safeguards.

13.4.1.2.4.4 Members of the professional staff shall be required to submit for inspection and approval any special equipment they wish to introduce into anesthetizing locations. Such equipment shall meet the requirements for the protection against electric shock as given in Chapter 8 *(see 8.4.1.1)*.

13.4.1.2.4.5 Line-powered equipment that introduces current to the patient's body shall have the output circuit isolated from ground to ensure against an unintentional return circuit through the patient. Equipment whose output circuit is grounded or ground-referenced shall be permitted, provided that the design provides equivalent safety to an isolated output.

13.4.1.2.5 Electric Connections and Testing.

13.4.1.2.5.1 Administrative authorities shall ascertain that electric maintenance personnel are completely familiar with the function and proper operation of ungrounded electric circuits required by E.6.6.2. The significance of the signal lamps and audible alarms installed to indicate accidental grounds shall be explained to all personnel affected. A permanent sign shall be in-

--`,,```,,,,````-`-`,,`,,`,`,,`---

Copyright National Fire Protection Association
Provided by IHS under license with NFPA
No reproduction or networking permitted without license from IHS
Not for Resale

stalled close to the position of the signal lamps to indicate their significance. Circuits in the panel boxes shall be clearly labeled, distinguishing between grounded and ungrounded, emergency and normal circuits, so that immediate recognition is possible.

13.4.1.2.5.2 Extension cords shall not be connected to lighting fixtures in anesthetizing locations under any circumstances.

13.4.1.2.6 Electrical Systems.

13.4.1.2.6.1 Wiring in Anesthetizing Locations.

(A) Wiring. Installed wiring shall be in metal raceway or shall be as required in NFPA 70, *National Electrical Code*, Sections 517.60 through 517.63.

(B) Raceway. Such distribution systems shall be run in metal raceways along with a green grounding wire sized no smaller than the energized conductors.

(C) Grounding to Raceways. Each device connected to the distribution system shall be effectively grounded to the metal raceway at the device.

(D) Installation. Methods of installation shall conform to Articles 250 and 517 of NFPA 70, *National Electrical Code*.

(E) Battery-Powered Emergency Lighting Units. One or more battery-powered emergency lighting units shall be provided as required in Section 700.12(E) of NFPA 70, *National Electrical Code*. Such lights shall be wired to circuits serving general area lighting. Testing shall be in accordance with 4.3.4.2.

(F) If an anesthetizing location is a wet location the provisions of 4.3.2.2.8 shall apply.

13.4.1.2.6.2 High-voltage wiring for X-ray equipment shall be effectively insulated from ground and adequately guarded against accidental contact.

13.4.1.2.6.3 Anesthetizing Location Receptacles. Receptacles for use in anesthetizing locations shall be listed for the use. In anesthetizing locations of new and existing construction having receptacles on isolated and grounded power, all receptacles shall be identified as to whether they are on isolated or grounded power.

13.4.1.2.6.4 Approved permanently installed equipment shall be permitted to be supplied through a grounded single-phase or three-phase distribution system if installed in accordance with E.6.6.3.

13.4.1.2.6.5* Unless the requirements of 13.4.1.2.6.6 are met, an isolation transformer shall not serve more than one operating room except as provided in 13.4.1.2.6.7. If an induction room serves more than one operating room, the isolated circuits of the induction room shall be permitted to be supplied from the isolation transformer of any one of the operating rooms served by that induction room.

13.4.1.2.6.6 The requirements of 13.4.1.2.6.5 shall not apply in existing hospitals where one isolation transformer is serving more than one inhalation anesthetizing location, provided the system has been installed in accordance with requirements previously found in 13.4.1 of NFPA 99 (as taken from former NFPA 56A) where such systems were permitted.

13.4.1.2.6.7 Isolation transformers shall be permitted to serve single receptacles in several patient areas when the receptacles are reserved for supplying power to equipment requiring 150 V or higher (e.g., items such as portable X-ray units) and when the receptacles and mating plugs are not interchangeable with the receptacles on the local isolated power system.

13.4.1.2.6.8 Switches in Anesthetizing Locations. Switches controlling ungrounded circuits within or partially within an inhalation anesthetizing location shall have a disconnecting pole for each conductor.

13.4.1.2.7 Gases.

13.4.1.2.7.1 Storage Locations or Manifold Enclosures for Oxygen and Nitrous Oxide. The location and ventilation of storage rooms or manifold enclosures for oxygen and nitrous oxide shall comply with Chapters 5 and 6.

13.4.1.2.7.2 Nonflammable Medical Gas Piping Systems. Oxygen and nitrous oxide manifolds and piping systems that supply anesthetizing locations shall comply with Chapter 5.

13.4.1.2.8 Anesthetic Apparatus. Anesthetic apparatus shall conform to the requirements in 9.5.1.

13.4.1.2.9 Electrical Equipment. See 13.3.8.1.

13.4.1.2.10 Fire Loss Prevention.

13.4.1.2.10.1 Hazard Assessment.

(A) An evaluation shall be made of hazards that could be encountered during surgical procedures. The evaluation shall include hazards associated with the properties of electricity, hazards associated with the operation of surgical equipment, and hazards associated with the nature of the environment.

(B) Periodic reviews of surgical operations and procedures shall be conducted with special attention given to any change in materials, operations, or personnel.

13.4.1.2.10.2 Fire Prevention Procedures. Fire prevention procedures shall be established.

13.4.1.2.10.3 Emergency Procedures.

(A) Procedures for operating room/surgical suite emergencies shall be developed. Such procedures shall include alarm actuation, evacuation, and equipment shutdown procedures, and provisions for control of emergencies that could occur in the operating room including specific detailed plans for control operations by an emergency control group within the organization or a public fire department.

(B) Emergency procedures shall be established for controlling chemical spills.

(C) Emergency procedures shall be established for extinguishing drapery, clothing, or equipment fires.

13.4.1.2.10.4 Orientation and Training.

(A) New operating room/surgical suite personnel, including physicians and surgeons, shall be taught general safety practices for the area and specific safety practices for the equipment and procedures they will use.

(B) Continuing safety education and supervision shall be provided, incidents shall be reviewed monthly, and procedures shall be reviewed annually.

(C) Fire exit drills shall be conducted periodically.

Copyright National Fire Protection Association
Provided by IHS under license with NFPA
No reproduction or networking permitted without license from IHS
Not for Resale

Chapter 14 Other Health Care Facilities

14.1 Applicability. This chapter applies to other health care facilities not covered in Chapters 13 and 15 through 21.

14.2 Responsibilities. The governing body of these facilities shall have the responsibility of protecting the facilities (for patient care and clinical investigation) and the personnel employed therein.

14.3 General Requirements.

14.3.1 Reserved.

14.3.2 Reserved.

14.3.3 Reserved.

14.3.4 Electrical System Requirements.

14.3.4.1 Electrical Distribution System. For ambulatory health care centers, the electrical distribution system for patient care areas shall conform to the requirements in Chapter 4, Electrical Systems. These requirements shall apply to new construction. Existing installations shall not need to be modified, provided that they meet the operational safety requirements in 4.3.3.2 and 4.3.3.3 *(see 1.3.2)*.

14.3.4.2 Essential Electrical Distribution System. The essential electrical distribution system shall conform to a Type 3 system as described in Chapter 4.

14.3.4.2.1 If electrical life support equipment is required, the essential electrical distribution system shall conform to a Type 1 system as described in Chapter 4.

14.3.4.2.2 If critical care areas are present, the essential electrical distribution system shall conform to a Type 1 system as described in Chapter 4.

14.3.5 Gas and Vacuum System Requirements.

14.3.5.1 General. Where medical gas, instrument air, vacuum, and WAGD systems are installed they shall conform to the requirements for the appropriate level. Systems conforming to different levels within the same building are permitted. The appropriate level shall be determined as follows:

(1) All systems shall comply with Level 1 requirements if any part of the systems are Level 1, except under both of the following conditions:
   (a) The system(s) is entirely separate from the Level 1 system(s) (i.e., is stand-alone) and is not connected to Level 1 sources or distribution pipelines.
   (b) The occupancy to be served and the function of that occupancy is distinct from other occupancies in the building.

(2) Medical gas and vacuum systems shall be permitted to be Level 2 systems only where both of the following conditions exist:
   (a) Paragraphs 14.3.5.1(1)(a) and 14.3.5.1(1)(b) apply.
   (b) Patients served by the system(s) are not dependent on mechanical ventilation or assisted mechanical ventilation at any time, including during administration of anesthesia.

(3) Medical gas and vacuum systems shall be permitted to be Level 3 systems only where both of the following conditions exist:
   (a) Paragraphs 14.3.5.1(1)(a) and 14.3.5.1(1)(b) and 14.3.5.1(2)(b) apply.
   (b) The patient population, during or subsequent to treatment, are not dependent for life on the gases or vacuum system(s), and the treatment(s) that the facility will perform can be completed without detrimental effect on patient outcomes in the event of sudden loss of the gas or vacuum system(s).
   (c)*The total of all gases in cylinders or containers, except nitrogen, connected and in storage at one time does not exceed 85 m^3 (3000 ft^3) STP, except that 142 m^3 (5000 ft^3) at STP shall be permitted if oxygen is stored in a DOT Specification 4L (cryogenic liquid) cylinder.
   (d) The system(s) supplies not more than two adjoining single treatment facilities.

14.3.5.2 Where nitrous oxide or halogenated agents are intended to be administered, a patient WAGD shall be installed and conform to Level 1 WAGD systems in Chapter 5.

14.3.6 Environmental Systems. (Reserved)

14.3.7 Material Requirements. (Reserved)

14.3.8 Electrical Equipment Requirements.

14.3.8.1 Patient Care Areas. If critical care areas are present, electrical appliances shall conform to Chapter 8.

14.3.8.2 Laboratories. Equipment shall conform to 8.4.2.2 and Section 8.5.

14.3.9 Gas Equipment Requirements — Patient. Gas equipment shall conform to the patient equipment requirements in Chapter 8.

14.3.10 Reserved

14.3.11 Laboratories. Laboratories covered in this chapter shall comply with requirements in Chapter 11 as applicable and the requirements of NFPA 45, *Standard on Fire Protection for Laboratories Using Chemicals*, as applicable.

14.3.12 Emergency. Facilities covered by this chapter shall comply with the provisions of Chapter 12 for emergency preparedness planning, as appropriate.

14.4 Specific Area Requirements.

14.4.1 Anesthetizing Locations. If anesthetizing locations are present, they shall comply with the requirements of 13.4.1.

14.4.1.1 Wiring.

14.4.1.1.1 Wiring. Installed wiring shall be in metal raceway or shall be as required in Sections 517.60 through 517.63 of NFPA 70, *National Electrical Code*.

14.4.1.1.2 Raceway. Such distribution systems shall be run in metal raceways along with a green grounding wire sized no smaller than the energized conductors.

14.4.1.1.3 Grounding to Raceways. Each device connected to the distribution system shall be effectively grounded to the metal raceway at the device.

14.4.1.1.4 Installation. Methods of installation shall conform to Articles 250 and 517 of NFPA 70, *National Electrical Code*.

14.4.1.1.5 Battery-Powered Emergency Lighting Units. One or more battery-powered emergency lighting units shall be provided as required in Section 700.12(e) of NFPA 70, *National Electrical Code*. Testing shall be in accordance with 4.3.4.2.

Copyright National Fire Protection Association
Provided by IHS under license with NFPA
No reproduction or networking permitted without license from IHS
Not for Resale

Chapter 15 Reserved

Chapter 16 Reserved

Chapter 17 Nursing Home Requirements

17.1 Applicability. This chapter applies to nursing homes, as defined in Chapter 3.

17.2 Responsibilities. The governing body of nursing homes shall have the responsibility of protecting the facilities (for patient care and clinical investigation) and the personnel employed therein.

17.3 General Requirements.

17.3.1 Reserved.

17.3.2 Reserved.

17.3.3 Reserved.

17.3.4 Electrical System Requirements.

17.3.4.1 Electrical Distribution System. (Reserved)

17.3.4.2 Essential Electrical Distribution System.

17.3.4.2.1 Unless the requirements of 17.3.4.2.2 are met, essential electrical distribution systems shall conform to the Type 2 systems as described in Chapter 4.

17.3.4.2.2 The requirements of 17.3.4.2.1 shall not apply to any freestanding nursing home that performs all of the following:

(1) Maintains admitting and discharge policies that preclude the provision of care for any patient or resident who needs to be sustained by electrical life support equipment
(2) Offers no surgical treatment requiring general anesthesia
(3) Provides an automatic battery-powered system or equipment that will be effective for at least 1½ hours and is otherwise in accordance with NFPA *101*, *Life Safety Code*, and NFPA 70, *National Electrical Code*, and that will be capable of supplying lighting of at least 1 ft-candle to exit lights, exit corridors, stairways, nursing stations, medication preparation areas, boiler rooms, and communication areas. This system shall also supply power to operate all alarm systems.

17.3.4.2.3 Nursing homes that meet the requirement in 17.3.4.2.2 shall be permitted to use a battery system or self-contained battery integral with equipment in lieu of the alternate power source required in 4.4.1.1.4.

17.3.4.2.4 If patients are admitted who need to be sustained by electrical life support equipment, the essential electrical system from the source to that portion of the facility where such patients are treated shall conform to a Type 1 system as described in Chapter 4.

17.3.5 Gas and Vacuum System Requirements.

17.3.5.1 General. Where medical gas, instrument air, vacuum, and WAGD systems are installed, they shall conform to the requirements for the appropriate level. Systems conforming to different levels within the same building are permitted. The appropriate level shall be determined as follows:

(1) All systems shall comply with Level 1 requirements if any part of the systems are Level 1, except under both of the following conditions:
   (a) The system(s) is entirely separate from the Level 1 system(s) (i.e., is stand-alone) and is not connected to Level 1 sources or distribution pipelines.
   (b) The occupancy to be served and the function of that occupancy is distinct from other occupancies in the building.
(2) Medical gas and vacuum systems shall be permitted to be Level 2 systems only where both of the following conditions exist:
   (a) Paragraphs 17.3.5.1(1)(a) and 17.3.5.1(1)(b) apply.
   (b) Patients served by the system(s) are not dependent on mechanical ventilation or assisted mechanical ventilation at any time, including during administration of anesthesia.
(3) Medical gas and vacuum systems shall be permitted to be Level 3 systems only where both of the following conditions exist:
   (a) Paragraphs 17.3.5.1(1)(a) and 17.3.5.1(1)(b) and 17.3.5.1(2)(a) apply.
   (b) The patient population, during or subsequent to treatment, are not dependent for life on the gases or vacuum system(s), and the treatment(s) that the facility will perform can be completed without detrimental effect on patient outcomes in the event of sudden loss of the gas or vacuum system(s).
   (c)*The total of all gases in cylinders or containers, except nitrogen, connected and in storage at one time does not exceed 85 m^3 (3000 ft^3) at STP, except that 142 m^3 (5000 ft^3) at STP shall be permitted if oxygen is stored in a DOT Specification 4L (cryogenic liquid) cylinder.
   (d) The system(s) supplies not more than two adjoining single treatment facilities.

17.3.5.2 Reserved.

17.3.5.3 Reserved.

17.3.6 Environmental Systems. (Reserved)

17.3.7 Material Requirements. (Reserved)

17.3.8 Electrical Equipment Requirements.

17.3.8.1 Patient Care Areas. (Reserved)

17.3.8.2 Laboratories. Equipment shall conform to 8.4.2.2 and Section 8.5.

17.3.9 Gas Equipment Requirements.

17.3.9.1 Patient. Equipment shall conform to requirements for patient equipment in Chapter 9.

17.3.10 Reserved.

17.3.11* Laboratories. Laboratories in nursing homes shall comply with the requirements of Chapter 11, as applicable.

17.3.12 Emergency Management. Nursing homes shall comply with the provisions of Chapter 12 for emergency management planning, as appropriate.

Copyright National Fire Protection Association
Provided by IHS under license with NFPA
No reproduction or networking permitted without license from IHS
Not for Resale

Chapter 18 Limited Care Facility Requirements

18.1 Applicability. This chapter applies to limited care facilities, as defined in Chapter 3.

18.2 Responsibilities. The governing body of limited care facilities shall have the responsibility of protecting the facilities (for patient care and clinical investigation) and the personnel employed therein.

18.3 General Requirements.

18.3.1 Reserved.

18.3.2 Reserved.

18.3.3 Reserved.

18.3.4 Electrical System Requirements.

18.3.4.1 Electrical Distribution System. (Reserved)

18.3.4.2 Essential Electrical Distribution System.

18.3.4.2.1 Unless the requirements of 18.3.4.2.2 are met, essential electrical distribution systems shall conform to the Type 2 systems as described in Chapter 4.

18.3.4.2.2 The requirements of 18.3.4.2.1 shall not apply to any freestanding limited care facility that performs all of the following:

(1) Maintains admitting and discharge policies that preclude the provision of care for any patient or resident who needs to be sustained by electrical life support equipment.
(2) Offers no surgical treatment requiring general anesthesia.
(3) Provides an automatic battery-powered system or equipment that will be effective for at least 1½ hours and is otherwise in accordance with NFPA *101*, *Life Safety Code*, and NFPA 70, *National Electrical Code*, and that will be capable of supplying lighting of at least 1 ft-candle to exit lights, exit corridors, stairways, nursing stations, medication preparation areas, boiler rooms, and communication areas. This system shall also supply power to operate all alarm systems.

18.3.4.2.3 Limited care facilities that meet the requirements in 18.3.4.2.2 shall be permitted to use a battery system or self-contained battery integral with equipment in lieu of the alternate power source required in 4.4.1.1.4.

18.3.5 Gas and Vacuum System Requirements.

18.3.5.1 General. Where medical gas, instrument air, vacuum, and WAGD systems are installed, they shall conform to the requirements for the appropriate level. Systems conforming to different levels within the same building are permitted. The appropriate level shall be determined as follows:

(1) All systems shall comply with Level 1 requirements if any part of the systems are Level 1, except under both of the following conditions:
   (a) The system(s) is entirely separate from the Level 1 system(s) (i.e., is stand-alone) and are not connected to Level 1 sources or distribution pipelines.
   (b) The occupancy to be served and the function of that occupancy is distinct from other occupancies in the building.
(2) Medical gas and vacuum systems shall be permitted to be Level 2 systems only where both of the following conditions exist:
   (a) Paragraphs 18.3.5.1(1)(a) and 18.3.5.1(1)(b) apply.
   (b) Patients served by the system(s) are not dependent on mechanical ventilation or assisted mechanical ventilation at any time, including during administration of anesthesia.
(3) Medical gas and vacuum systems shall be permitted to be Level 3 systems only where all of the following conditions exist:
   (a) Paragraphs 18.3.5.1(1)(a) and 18.3.5.1(1)(b) and 18.3.5.1(2)(b) apply.
   (b) The patient population, during or subsequent to treatment, are not dependent for life on the gases or vacuum system(s), and the treatment(s) that the facility will perform can be completed without detrimental effect on patient outcomes in the event of sudden loss of the gas or vacuum system(s)
   (c)*The total of all gases in cylinders or containers, except nitrogen, connected and in storage at one time does not exceed 85 m^3 (3000 ft^3) at STP, except that 142 m^3 (5000 ft^3) at STP shall be permitted if oxygen is stored in a DOT Specification 4L (cryogenic liquid) cylinder.
   (d) The system(s) supplies not more than two adjoining single treatment facilities

18.3.6 Environmental Systems. (Reserved)

18.3.7 Material Requirements. (Reserved)

18.3.8 Electrical Equipment Requirements.

18.3.8.1 Patient Care Areas. (Reserved)

18.3.8.2 Laboratories. Equipment shall conform to 8.4.2.2 and Section 8.5.

18.3.9 Gas Equipment Requirements. (Reserved)

18.3.10 Reserved.

18.3.11* Laboratories. Laboratories in limited care facilities shall comply with the requirements of Chapter 11, as applicable.

18.3.12 Emergency Management. Limited care facilities shall comply with the provisions of Chapter 12 for emergency management planning, as appropriate.

Chapter 19 Electrical and Gas Equipment for Home Care

19.1* Applicability. This chapter applies to home care, as defined in Chapter 3.

19.2 Responsibilities. It shall be the responsibility of the equipment supplier, which could be a hospital, an equipment rental company, or an equipment sales company, to perform the following:

(1) Appropriately instruct the equipment user to operate the equipment safely. This shall include written instructions, demonstrations, and periodic review of the use.
(2) Provide instruction on user maintenance of the equipment, provide supervision of the maintenance, and provide such higher level maintenance as is appropriate.

19.3 Equipment.

19.3.1 Reserved.

19.3.2 Reserved.

Copyright National Fire Protection Association
Provided by IHS under license with NFPA
No reproduction or networking permitted without license from IHS
Not for Resale

19.3.3 Reserved.

19.3.4 Reserved.

19.3.5 Reserved.

19.3.6 Reserved.

19.3.7 Reserved.

19.3.8 Electrical Equipment Requirements. Electrical equipment used in the home for health care shall conform to such requirements of Chapter 8 as applicable.

19.3.9 Gas Equipment Requirements. Gas equipment used in the home for health care shall conform to such requirements of Chapter 9 as applicable.

Chapter 20 Hyperbaric Facilities

20.1 Applicability.

20.1.1 This chapter shall apply to new facilities.

20.1.2 This chapter shall also apply to the altered, renovated, or modernized portion of an existing system or individual component.

20.1.3 Existing construction or equipment shall be permitted to be continued in use when such use does not constitute a distinct hazard to life.

20.1.4* Scope. The scope of this chapter shall be as specified in 1.1.20.

20.1.5 Classification of Chambers.

20.1.5.1 General. Chambers shall be classified according to occupancy in order to establish appropriate minimum essentials in construction and operation.

20.1.5.2* Occupancy. Hyperbaric chambers shall be classified according to the following criteria:

(1) Class A — Human, multiple occupancy
(2) Class B — Human, single occupancy
(3) Class C — Animal, no human occupancy

20.1.6 Nature of Hazards. See Section B.7.

20.2 Construction and Equipment.

20.2.1 Housing for Hyperbaric Facilities.

20.2.1.1 For Class A chambers located inside a building, the chamber(s) and all ancillary service equipment shall be protected by 2-hour fire-resistant–rated construction.

20.2.1.1.1* Free-standing, dedicated buildings containing only a Class A chamber(s) and ancillary service equipment shall not be required to be protected by 2-hour fire-resistant–rated construction.

20.2.1.1.2 Trailer or vehicle-mounted facilities shall be permitted without a 2-hour fire-resistant–rated perimeter.

20.2.1.1.3 When trailer or vehicle-mounted facilities are located contiguous to a health care facility, or another structure, a 2-hour fire-resistant–rated barrier shall be placed between the facility and the contiguous structure.

20.2.1.1.4 Where building exterior walls form part of the facility boundary, that portion of the facility boundary shall not require 2-hour fire-resistant–rated construction.

20.2.1.1.5* If there are connecting doors through such common walls of contiguity, they shall be at least B-label, 1½-hour fire doors.

20.2.1.1.6 When used for hyperbaric procedures, the room or rooms housing the Class A or Class B chambers shall be for the exclusive use of the hyperbaric operation.

20.2.1.1.7 Service equipment (e.g., compressors) shall be permitted to be located in multi-use spaces meeting the requirements of 20.2.1.1.

20.2.1.1.8 The supporting foundation for any chamber shall be designed to support the chamber.

20.2.1.1.8.1 If on-site hydrostatic testing will be performed, the chamber supporting foundation shall be designed to support an additional water weight.

20.2.1.2 A hydraulically calculated automatic wet pipe sprinkler system meeting the requirements of NFPA 13, *Standard for the Installation of Sprinkler Systems*, shall be installed in the room housing a Class A chamber and in any ancillary equipment rooms.

20.2.1.2.1 Class A chambers not contiguous to a health care facility, and located in a mobile vehicle-mounted facility shall not be required to be protected as specified in 20.2.1.2.

20.2.1.2.2* Chamber room sprinkler heads shall be an approved type equipped with fusible elements.

20.2.1.2.3 The element temperature ratings shall be as low as possible, consistent with the requirements against false operation in NFPA 13.

20.2.1.3 The room or rooms housing Class B and Class C chambers shall be afforded sprinkler protection in accordance with 20.2.1.2.

20.2.1.3.1 Chambers not contiguous to a health care facility, and located in a mobile vehicle-mounted facility shall not be required to have sprinkler protection as specified in 20.2.1.2.

20.2.1.4 Nonflammable gases shall be permitted to be piped into the hyperbaric facility.

20.2.1.4.1 Shutoff valves accessible to facility personnel shall be provided for such piping at the point of entry to the room housing the chamber.

20.2.1.4.2 Storage and handling of nonflammable gases shall meet the applicable requirements of Chapter 5, Gas and Vacuum Systems, of this document and NFPA 50, *Standard for Bulk Oxygen Systems at Consumer Sites*.

20.2.2 Fabrication of the Hyperbaric Chamber.

20.2.2.1* Chambers for human occupancy, and their supporting systems, shall be designed and fabricated to meet ANSI/ASME PVHO-1, *Safety Standard for Pressure Vessels for Human Occupancy*, by personnel qualified to fabricate vessels under such codes.

20.2.2.2 The chamber shall be stamped in accordance with ANSI/ASME PVHO-1, *Safety Standard for Pressure Vessels for Human Occupancy*.

20.2.2.3 As a minimum, animal chambers shall be designed, fabricated, and stamped to meet ANSI/ASME Section VIII, Division 1 code requirements.

Copyright National Fire Protection Association
Provided by IHS under license with NFPA
No reproduction or networking permitted without license from IHS
Not for Resale

20.2.2.4 The floor of a Class A chamber shall be designed to support equipment and personnel necessary for the operation of the chamber according to its expected purpose.

20.2.2.4.1 The floor of Class A chambers shall be noncombustible.

20.2.2.4.2 If the procedures to be carried out in the Class A hyperbaric chamber require antistatic flooring, the flooring shall be installed in accordance with the provisions of 13.4.1.

20.2.2.4.3 If a bilge is installed, access to the bilge shall be provided for cleaning purposes.

20.2.2.4.4 If the interior floor of a Class A chamber consists of removable floor (deck) plates, the plates shall be mechanically secured and electrically bonded to the chamber to ensure a positive electrical ground and to prevent movement of the plate, which could cause injury to personnel.

20.2.2.5 The interior of Class A chambers shall be unfinished or treated with a finish that is one of the following:

(1) Inorganic-zinc–based
(2) High-quality epoxy
(3) Flame resistant

20.2.2.5.1 If the interior of a Class A chamber is treated (painted) with a finish listed in 20.2.2.5, the cure procedure and minimum duration for each coat of finish to off-gas shall be in accordance with the manufacturer's application instructions and material safety data sheets.

20.2.2.5.2* If sound-deadening materials are employed within a hyperbaric chamber, they shall be flame resistant as defined in Chapter 3.

20.2.2.6* Viewing ports, access ports for piping and wiring or monitoring, and related leads shall be installed during initial fabrication of the chamber.

20.2.2.6.1 Access ports in Class A chambers, for monitoring, and other electrical circuits shall be housed in enclosures that are weatherproof both inside and outside the chamber for protection in the event of sprinkler activation.

20.2.2.6.2 Viewports and penetrator plates shall be designed and fabricated according to ANSI/ASME PVHO-1, *Safety Standard for Pressure Vessels for Human Occupancy*.

20.2.3 Illumination.

20.2.3.1 Unless designed for chamber use, sources of illumination shall be mounted outside the pressure chamber and arranged to shine through chamber ports or through chamber penetrators designed for fiberoptic or similar lighting.

20.2.3.1.1 Lighting fixtures used in conjunction with viewports shall be designed so that temperature ratings for the viewport material given in ANSI/ASME PVHO-1 are not exceeded.

20.2.3.1.2 Gasket material shall be of a type that allows the movement of thermal expansion and shall be selected for the temperatures, pressures, and composition of gases involved.

20.2.3.1.2.1 Gaskets or O-rings shall be confined to grooves or enclosures, which will prevent their being blown out or squeezed from the enclosures or compression flanges.

20.2.3.2 Lighting permanently installed inside the chamber and portable lighting for temporary use inside the chamber shall meet the requirements of 20.2.7.3.15.

20.2.3.3 Emergency lighting for the interior of the chamber shall be provided.

20.2.4 Chamber Ventilation.

20.2.4.1 Ventilation of Class A Chambers.

20.2.4.1.1 The minimum ventilation rate for a Class A chamber shall be 0.085 actual m^3 (3 actual ft^3) per minute of air per chamber occupant who is not using a breathing-mask overboard dump system that exhausts exhaled gases.

20.2.4.1.1.1 The minimum threshold rate shall be 0.085 actual m^3 (3 actual ft^3) per minute.

20.2.4.1.1.2 Provision shall be made for ventilation during nonpressurization of Class A chambers as well as during pressurization.

20.2.4.1.2* Ventilation shall not be required when saturation operations are conducted in the chamber, provided that carbon dioxide removal and odor control are accomplished and that the monitoring requirements of 20.2.8.4.1 and 20.2.8.5 are met.

20.2.4.1.3 Individual breathing apparatus shall be available inside a Class A chamber for each occupant for use in the event that the chamber atmosphere is fouled by combustion or otherwise.

20.2.4.1.3.1 The breathing mixture supplied to breathing apparatus shall be independent of chamber atmosphere.

20.2.4.1.3.2 The breathing gas supply shall be designed for simultaneous use of all breathing apparatus.

20.2.4.1.3.3 Breathing apparatus shall function at all pressures that can be encountered in the chamber.

20.2.4.1.3.4 In the event of a fire within a chamber, provision shall be made to switch all breathing apparatus to an air supply that is independent of the chamber atmosphere.

20.2.4.2 Sources of Air for Chamber Atmospheres.

20.2.4.2.1* Sources of air for chamber atmospheres shall be such that toxic or flammable gases are not introduced.

20.2.4.2.2 Compressor intakes shall be located away from air contaminated by exhaust from activities of vehicles, internal combustion engines, stationary engines, or building exhaust outlets.

20.2.4.2.3 Air supply for chamber atmosphere shall be monitored as required in 20.2.8.6.

20.2.4.2.4 The use of conventional oil-lubricated compressors shall be permitted provided they are fitted with air treatment packages designed to produce medical air, and they meet the monitoring requirements of 20.2.8.6.

20.2.4.2.4.1 The air treatment packages shall include automatic safeguards.

20.2.4.2.5 Air compressor installations shall consist of two or more individual compressors with capacities such that required system flow rates can be maintained on a continuous basis with any single compressor out of operation unless 20.2.7.2.4 is satisfied.

20.2.4.2.5.1 Each compressor shall be supplied from separate electrical branch circuits.

20.2.4.2.6 Air compressor installations that supply medical air to piped gas systems as well as to hyperbaric facilities shall

--`,,```,,,,````-`-`,,`,,`,`,,`---

Copyright National Fire Protection Association
Provided by IHS under license with NFPA
No reproduction or networking permitted without license from IHS
Not for Resale

meet the requirements of 5.1.3.5.3 in Chapter 5 and the requirements of this chapter.

20.2.4.2.7 Air compressor installations that are used exclusively for hyperbaric facilities shall meet the requirements of this chapter only.

20.2.4.3 Temperature and Humidity Control.

20.2.4.3.1 Warming or cooling of the atmosphere within a Class A chamber shall be permitted by circulating the ambient air within the chamber over or past coils through which a constant flow of warm or cool water or water/glycol mixture is circulated.

20.2.4.3.2* Class A chambers that are not used in the capacity of an operating room shall maintain a temperature that is comfortable for the occupants [usually 22°±2°C (75°±5°F)].

20.2.4.3.3 Whenever the Class A chamber is used as an operating room, it shall be ventilated and the air supply thereto shall be conditioned according to the minimum requirements for temperature for hospital operating rooms as specified in 13.4.1.

20.2.4.3.3.1 If inhalation anesthetic agents are being utilized (e.g., nitrous oxide, methoxyflurane, halothane), a closed anesthetic system with exhaled-gas scavenging and overboard dumping shall be employed.

20.2.4.3.3.2 Flammable inhalation anesthetics (i.e., cyclopropane, ethyl ether, ethylene, and ethyl chloride) shall not be employed.

20.2.4.3.4 Dehumidification shall be permitted through the use of cold coils.

20.2.4.3.5 Humidification by the use of an air-powered water nebulizer shall be permitted.

20.2.4.3.6 Noncombustible packing and nonflammable lubricant shall be employed on the fan shaft.

20.2.4.4 Ventilation of Class B Chambers.

20.2.4.4.1* The minimum ventilation rate for a Class B chamber shall be 0.0283 m^3/min (1 actual ft^3/min).

20.2.4.4.2 Class B chambers not designed for 100 percent oxygen environment shall comply with the monitoring requirements of 20.2.8.4.

20.2.4.5 Emergency Depressurization and Facility Evacuation Capability.

20.2.4.5.1 Class A chambers shall be capable of depressurizing from 3 ATA (304.0 kPa) to ambient pressure in no more than 6 minutes.

20.2.4.5.2 Class B chambers shall be capable of depressurizing from 3 ATA (304.0 kPa) to ambient pressure in no more than 2 minutes.

20.2.4.5.3* A source of breathable gas allowing unrestricted mobility shall be available outside a Class A or B chamber for use by personnel in the event that the air in the vicinity of the chamber is fouled by smoke or other combustion products of fire.

20.2.5 Fire Protection in Class A Chambers.

20.2.5.1 General Requirements.

20.2.5.1.1 A fire suppression system consisting of independently supplied and operating handline and deluge type water spray systems shall be installed in all Class A chambers.

20.2.5.1.2 Design of the fire suppression system shall be such that failure of components in either the handline or deluge system will not render the other system inoperative.

20.2.5.1.3 System design shall be such that activation of either the handline or the deluge system shall automatically cause the following:

(1) Visual and aural indication of activation shall occur at the chamber operator's console.
(2) All ungrounded electrical leads for power and lighting circuits contained inside the chamber shall be disconnected.
(3) Emergency lighting *(see 20.2.3.3)* and communication, where used, shall be activated.

20.2.5.1.3.1 Intrinsically safe circuits, including sound-powered communications, shall be permitted to remain connected when either the handline or the deluge system is activated.

20.2.5.1.4* A fire alarm signaling device shall be provided at the chamber operator's control console for signaling the emergency fire/rescue network of the institution containing the hyperbaric facility.

20.2.5.1.4.1 Trailer or vehicle-mounted facilities not contiguous to a health care facility shall conform to the requirements of one of the following:

(1) Comply with 20.2.5.1.4 or
(2) Have a means for immediately contacting the local fire department.

20.2.5.1.5* Fire blankets and portable carbon dioxide extinguishers shall not be installed in or carried into the chamber.

20.2.5.1.6 Booster pumps, control circuitry, and other electrical equipment involved in fire suppression system operation shall be powered from a critical branch of the emergency electrical system as specified in 20.2.7.2.2.1.

20.2.5.1.7 Signs prohibiting the introduction of flammable liquids, gases, and other articles not permitted by this chapter into the chamber shall be posted at the chamber entrance(s).

20.2.5.1.8 The fire suppression system shall be permitted to be supplied from the local potable water service.

20.2.5.2 Deluge System Requirements. A fixed water deluge extinguishing system shall be installed in all chamber compartments that are designed for manned operations.

20.2.5.2.1 In chambers that consist of more than one chamber compartment (lock), the design of the deluge system shall meet the requirements of 20.2.5.2 when the chamber compartments are at different depths (pressures).

20.2.5.2.2 The deluge system in different compartments (locks) shall operate independently or simultaneously.

20.2.5.2.3 Fixed deluge systems shall not be required in chamber compartments that are used strictly as personnel transfer compartments (locks), and for no other purposes.

20.2.5.2.4* Manual activation and deactivation deluge controls shall be located at the operator's console and in each chamber compartment (lock) containing a deluge system.

20.2.5.2.4.1 Controls shall be designed to prevent unintended activation.

20.2.5.2.5 Water shall be delivered from the fixed discharge nozzles as specified in 20.2.5.2.7 within 3 seconds of activation of any affiliated deluge control.

Copyright National Fire Protection Association
Provided by IHS under license with NFPA
No reproduction or networking permitted without license from IHS
Not for Resale

20.2.5.2.6* Average spray density at floor level shall be not less than 81.5 L/min/m^2 (2 gpm/ft^2) with no floor area larger than 1 m^2 (10.76 ft^2) receiving less than 40.75 L/min/m^2 (1 gpm/ft^2).

20.2.5.2.7 There shall be water available in the deluge system to maintain the flow specified in 20.2.5.2.6 simultaneously in each chamber compartment (lock) containing the deluge system for 1 minute.

20.2.5.2.7.1 The limit on maximum extinguishment duration shall be governed by the chamber capacity (bilge capacity also, if so equipped) and/or its drainage system.

20.2.5.2.8 The deluge system shall have stored pressure to operate for at least 15 seconds without electrical branch power.

20.2.5.3 Handline System Requirements. A handline extinguishing system shall be installed in all chamber compartments (locks).

20.2.5.3.1 At least two handlines shall be strategically located in treatment compartments (locks).

20.2.5.3.2 At least one handline shall be located in each personnel transfer compartment (lock).

20.2.5.3.3 If any chamber compartment (lock) is equipped with a bilge access panel, at least one handline shall reach the bilge area.

20.2.5.3.4 Handlines shall have a 1.27 cm (0.5 in.) minimum internal diameter and shall have a rated working pressure greater than the highest supply pressure of the supply system.

20.2.5.3.5 Each handline shall be activated by a manual, quick-opening, quarter-turn valve located within the compartment (lock).

20.2.5.3.5.1 Hand-operated, spring-return to close valves at the discharge end of handlines shall be permitted.

20.2.5.3.6 Handlines shall be equipped with override valves that are accessible to personnel outside the chamber.

20.2.5.3.7 The water supply for the handline system shall be designed to ensure a 345 kPa (50 psi) minimum water pressure above the maximum chamber pressure.

20.2.5.3.7.1 The system shall be capable of supplying a minimum of 18.9 L/min (5 gpm) simultaneously to each of any two of the handlines at the maximum chamber pressure for a period of not less than 4 minutes.

20.2.5.4 Automatic Detection System Requirements. Automatic fire detection systems shall not be required.

20.2.5.4.1 Surveillance fire detectors responsive to the radiation from flame shall be employed.

20.2.5.4.1.1 Type and arrangement of detectors shall be such as to respond within 1 second of flame origination.

20.2.5.4.2* The number of detectors employed and their location shall be selected to cover the chamber interior.

20.2.5.4.3 The system shall be powered from the critical branch of the emergency electrical system or shall have automatic battery back-up.

20.2.5.4.4 If used to automatically activate the deluge system, the requirements for manual activation/deactivation in 20.2.5.2.4 and deluge system response time in 20.2.5.2.5 shall still apply.

20.2.5.4.5 The system shall include self-monitoring functions for fault detection and fault alarms and indications.

20.2.5.4.6 Automatic fire detection equipment, when used, shall meet the applicable requirements in 20.2.7.3.

20.2.5.5* Testing Requirements. The deluge and handline systems shall be functionally tested at least semiannually per 20.2.5.2.7 for deluge systems and 20.2.5.3.7 for handline systems. Following the test, all valves shall be placed in their baseline position.

20.2.5.5.1 If a bypass system is used, it shall not remain in the test mode after completion of the test.

20.2.5.5.2 During initial construction, or whenever changes are made to the installed deluge system that will affect the spray pattern, testing of spray coverage to demonstrate conformance to the requirements of 20.2.5.2.6 shall be performed at surface pressure, and at maximum operating pressure. The requirements of 20.2.5.2.6 shall be satisfied under both conditions.

20.2.5.5.3 A detailed record of the test results shall be maintained and a copy sent to the hyperbaric facility safety director.

20.2.6 Fire Protection in Class B and Class C Chambers. Class B and Class C chambers shall not be required to comply with 20.2.5.

20.2.6.1 Signs prohibiting the introduction of flammable liquids, gases, and other articles not permitted by this chapter into the chamber shall be posted at the chamber entrance(s).

20.2.6.2 A fire alarm signaling device shall be provided within the room housing the chamber(s) for signaling the emergency fire/rescue network of the institution containing the hyperbaric facility.

20.2.6.2.1 Trailer or vehicle-mounted facilities not contiguous to a health care facility shall conform to the requirements of one of the following:

(1) Comply with 20.2.6.2
(2) Have a means for immediately contacting the local fire department

20.2.7 Electrical Systems.

20.2.7.1 General.

20.2.7.1.1 The requirements of NFPA 70, *National Electrical Code*, or local electrical codes shall apply to electrical wiring and equipment in hyperbaric facilities within the scope of this chapter, except as such rules are modified in 20.2.7.

20.2.7.1.2 All hyperbaric chamber service equipment, switchboards, panels, or control consoles shall be located outside of, and in the vicinity of, the chamber.

20.2.7.1.3 Console or module spaces containing both oxygen piping and electrical equipment shall be either one of the following:

(1) Mechanically or naturally ventilated
(2) Continuously monitored for excessive oxygen concentrations whenever the electrical equipment is energized

20.2.7.1.4 For the fixed electrical installation, none of the following shall be permitted inside the chamber:

(1) Circuit breakers
(2) Line fuses
(3) Motor controllers

Copyright National Fire Protection Association
Provided by IHS under license with NFPA
No reproduction or networking permitted without license from IHS
Not for Resale

(4) Relays
(5) Transformers
(6) Ballasts
(7) Lighting panels
(8) Power panels

20.2.7.1.4.1* If motors are to be located in the chamber, they shall meet the requirements of 20.2.7.3.14.

20.2.7.1.5 All electrical equipment connected to or used in conjunction with hyperbaric patients shall comply with the requirements of Chapter 8, Electrical Equipment, and with the applicable paragraphs of 20.2.7.3.

20.2.7.1.6 In the event of activation of the room sprinkler system, electrical equipment shall be protected from sprinkler water but need not remain functional if manual means to control and decompress the chamber are provided.

20.2.7.2 Electrical Service.

20.2.7.2.1 All hyperbaric facilities shall contain an electrical service that is supplied from two independent sources of electric power.

20.2.7.2.1.1 All hyperbaric facilities for human occupancies shall contain an electrical service that is supplied from two independent sources of electric power.

20.2.7.2.1.2 For hyperbaric facilities using a prime-mover-driven generator set, it shall be designated as the "emergency system" and shall meet the requirements of Chapter 4 of this standard for hyperbaric systems based in health care facilities.

20.2.7.2.1.3 Article 700, Emergency Systems, of NFPA 70, *National Electrical Code*, shall apply to hyperbaric systems located in facilities other than health care facilities.

20.2.7.2.2 Electrical equipment associated with life support functions of hyperbaric facilities shall be connected to the critical branch of the emergency system; that is, such equipment shall have electrical power restored within 10 seconds of interruption of normal power. Such equipment shall include, but is not limited to the following:

(1) Electrical power outlets located within the chamber
(2) Chamber emergency lighting, whether internally or externally mounted
(3) Chamber intercommunications
(4) Alarm systems, including fire detectors
(5) Chamber fire suppression system equipment and controls
(6) Other electrical controls used for chamber pressurization and ventilation control
(7) A number of chamber room lights (either overhead or local) to ensure continued safe operation of the facility during a normal power outage

20.2.7.2.2.1 Booster pumps in the chamber fire suppression system shall be on separate branch circuits serving no other loads.

20.2.7.2.3 Electric-motor-driven compressors and auxiliary electrical equipment normally located outside the chamber and used for chamber atmospheric control shall be connected to the equipment system *(see Chapter 4)* or the emergency system *(see* NFPA 70, *National Electrical Code, Article 700)*, as applicable.

20.2.7.2.4 Electric-motor–driven compressors and auxiliary electrical equipment shall be arranged for delayed-automatic or manual connection to the alternate power source so as to prevent excessive current draw on the system during restarting.

20.2.7.2.5 When reserve air tanks or non-electric compressor(s) to maintain pressure and ventilation airflow within the chamber and supply air for the chamber pressurization are provided, the compressor(s) and auxiliary equipment shall not be required to have an alternate source of power.

20.2.7.2.6 Electrical control and alarm systems design shall be such that hazardous conditions (e.g., loss of chamber pressure control, deluge activation, spurious alarms) do not occur during power interruption or during power restoration.

20.2.7.3* Wiring and Equipment Inside Class A Chambers. The following general rules shall be satisfied in the use of electrical devices and equipment. The requirements under 20.2.7.3 are intended to protect against the elevated fire risks known to exist in a pressurized air environment and shall not be construed as classifying the chamber interior as a Class I (as defined in NFPA 70, *National Electrical Code*, Article 500) hazardous location.

20.2.7.3.1 Equipment or equipment component installed in or used in the chamber shall not present an explosion or implosion hazard under the conditions of hyperbaric use.

20.2.7.3.2 All equipment shall be rated, or tested and documented, for intended hyperbaric conditions prior to use.

20.2.7.3.3 Only the electrical equipment necessary for the safe operation of the chamber and for required patient care shall be permitted in the chamber.

20.2.7.3.4 Only portable equipment necessary for the logistical and operational support shall be permitted in the chamber during manned pressurization.

20.2.7.3.5 Where conformance with Class I, Division 1 requirements is specified in 20.2.7.3.7, conformance with Class I, Division 2 requirements is permitted to be substituted.

20.2.7.3.6 Conductor Insulation. All conductors inside the chamber shall be insulated with a material classified as flame resistant as defined in Chapter 3.

20.2.7.3.6.1 Insulation classified as flame retardant shall not be required on conductors that form an integral part of electrical equipment approved for use inside the chamber, including patient leads.

20.2.7.3.6.2 Insulation shall not be required on ground conductors inside of a conduit.

20.2.7.3.7 Wiring Methods.

20.2.7.3.7.1 Fixed wiring shall be installed in threaded RMC or IMC conduit utilizing the following waterproof components:

(1) Threaded metal joints
(2) Fittings
(3) Boxes
(4) Enclosures

20.2.7.3.7.2 A continuous ground shall be maintained between all conductive surfaces enclosing electrical circuits and the chamber hull using approved grounding means.

20.2.7.3.7.3 All threaded conduit shall be threaded with an NPT standard conduit cutting die that provides a 1.9 cm taper per 0.3 m (0.75 in. taper per ft).

20.2.7.3.7.4 All threaded conduit shall be made wrenchtight to prevent sparking when fault current flows through the conduit system.

Copyright National Fire Protection Association
Provided by IHS under license with NFPA
No reproduction or networking permitted without license from IHS
Not for Resale

20.2.7.3.7.5 Wiring classified as intrinsically safe for any group location and installed in accordance with Article 504, Intrinsically Safe Systems, of NFPA 70, *National Electrical Code*, shall be permitted.

20.2.7.3.7.6 Threaded, liquidtight flexible metal conduit installed in accordance with Article 351 of NFPA 70, *National Electrical Code*, shall be permitted when protected from damage by physical barriers such as equipment panels.

20.2.7.3.8 Drainage. Means of draining fixed conduit and fixed equipment enclosures shall be provided.

20.2.7.3.9 Flexible Electrical Cords. Flexible cords used to connect portable utilization equipment to the fixed electrical supply circuit shall meet all of the following requirements:

(1) Be of a type approved for extra-hard utilization in accordance with Table 400.4 of NFPA 70, *National Electrical Code*
(2) Include a ground conductor
(3) Meet the requirements of Article 501.11 of NFPA 70, *National Electrical Code*

20.2.7.3.9.1 The normal cord supplied with the device shall be permitted when the portable device is rated at less than 2 A and the cord is positioned out of traffic and protected from physical abuse.

20.2.7.3.10* Receptacles Installed Inside the Chamber.

20.2.7.3.10.1 Receptacles shall be waterproof.

20.2.7.3.10.2 Receptacles shall be of the type providing for connection to the grounding conductor of the flexible cord.

20.2.7.3.10.3 Receptacles shall be supplied from isolated power circuits meeting the requirements of 20.2.7.4.2.

20.2.7.3.10.4 The design of the receptacle shall be such that sparks cannot be discharged into the chamber environment when the plug is inserted or withdrawn under electrical load.

20.2.7.3.10.5 One of the following shall be satisfied to protect against inadvertent withdrawal of the plug under electrical load:

(1) The receptacle-plug combination shall be of a locking type.
(2) The receptacle shall carry a label warning against unplugging under load, and the power cord shall not present a trip hazard for personnel moving in the chamber.

20.2.7.3.11 Switches. Switches in the fixed wiring installation shall be waterproof.

20.2.7.3.11.1* Switch make and break contacts shall be housed in the electrical enclosure so that no sparks from arcing contacts can reach the chamber environment.

20.2.7.3.12* Temperature. No electrical equipment installed or used in the chamber shall have an operating surface temperature in excess of 85°C (185°F).

20.2.7.3.13 Exposed Live Electrical Parts. There shall be no exposed live electrical parts.

20.2.7.3.13.1 Exposed live electrical parts that are intrinsically safe shall be permitted.

20.2.7.3.13.2 Exposed live electrical parts that constitute patient monitoring leads, which are part of electromedical equipment, shall be permitted provided that they meet the requirements of 20.2.7.3.17.

20.2.7.3.14 Motors. Motors shall meet one of the following requirements:

(1) Article 501.8(A)(1) of NFPA 70, *National Electrical Code*, for the chamber pressure and oxygen concentration
(2) Be of the totally enclosed types meeting Article 501.8(A)(2) or 501.8(A)(3) of NFPA 70, *National Electrical Code*.

20.2.7.3.15* Lighting. Lighting installed or used inside the chamber shall be rated for a pressure of 1½ times the chamber working pressure. Permanently installed fixtures shall meet the following requirements:

(1) Be rated and approved for Class I (Division 1 or 2) classified areas
(2) Have lens guards installed
(3) Be located away from areas where they would experience physical damage from the normal movement of people and equipment

20.2.7.3.15.1 Ballasts and other energy storage components that are part of the lighting circuit shall be installed outside the chamber in accordance with 20.2.7.1.4.

20.2.7.3.15.2 Portable fixtures intended for spot illumination shall be shatterproof or protected from physical damage.

20.2.7.3.16 Low-Voltage, Low-Power Equipment. The requirements of 20.2.7.3.16 shall apply to sensors, signaling, alarm, communication, and remote control equipment installed or used in the chamber for operation of the chamber.

20.2.7.3.16.1* Equipment shall be isolated from main power by one of the following means:

(1) Design of the power supply circuit
(2) Opto-isolation
(3) By other electronic isolation means

20.2.7.3.16.2 Circuits such as headset cables, sensor leads, and so forth, not enclosed as required in 20.2.7.3.7, shall meet one of the following requirements:

(1) Be part of approved intrinsically safe equipment
(2) Be limited by circuit design to no more than 28 V and 0.5 A under normal or circuit fault conditions

20.2.7.3.16.3 Chamber speakers shall be of a design in which the electrical circuitry and wiring is completely enclosed.

20.2.7.3.16.4 Electrical rating of chamber speakers shall not exceed 28 V rms and 25 W.

20.2.7.3.16.5 Battery-operated, portable intercom headset units shall meet the requirements of 20.2.7.3.17.5 for battery-operated devices.

20.2.7.3.17* Portable Patient Care–Related Electrical Appliances.

20.2.7.3.17.1 The appliance shall be designed and constructed in accordance with Chapter 10.

20.2.7.3.17.2 The electrical and mechanical integrity of the appliance shall be verified and documented through an ongoing maintenance program as required in Chapter 8.

20.2.7.3.17.3 The appliance shall conform to the requirements of 20.2.7.3.1 and 20.2.7.3.12.

20.2.7.3.17.4 Appliances that utilize oxygen shall not allow oxygen accumulation in the electrical portions of the equipment under normal and abnormal conditions.

Copyright National Fire Protection Association
Provided by IHS under license with NFPA
No reproduction or networking permitted without license from IHS
Not for Resale

20.2.7.3.17.5 Battery-Operated Devices. Battery-operated devices shall meet the following requirements:

(1) Batteries shall be fully enclosed and secured within the equipment enclosure.
(2) Batteries shall not be damaged by the maximum chamber pressure they are exposed to.
(3) Batteries shall be of a sealed type that does not off-gas during normal use.
(4) Batteries or battery-operated equipment shall not undergo charging while located in the chamber.
(5) Batteries shall not be changed on in-chamber equipment while the chamber is in use.
(6) The equipment electrical rating shall not exceed 12 V and 48 W.

20.2.7.3.17.6 Cord-Connected Devices. Cord-connected devices shall meet the following requirements:

(1) All portable, cord-connected equipment shall have an on–off power switch.
(2) The equipment electrical rating shall not exceed 120 V and 2 A unless the electrical portions of the equipment are inert-gas purged.
(3) The plug of cord-connected devices shall not be used to interrupt power to the device.

20.2.7.4 Grounding and Ground Fault Protection.

20.2.7.4.1 All chamber hulls shall be grounded to an electrical ground or grounding system that meets the requirements of Article 250, Grounding, Section III, Grounding Electrode System, of NFPA 70, *National Electrical Code*.

20.2.7.4.1.1 Grounding conductors shall be secured as required by Article 250, Section III, Grounding Conductor Connections, of NFPA 70, *National Electrical Code*.

20.2.7.4.1.2 The material, size, and installation of the grounding conductor shall meet the requirements of Article 250, Section VI, Grounding Conductors, of NFPA 70, *National Electrical Code*, for equipment grounding conductors.

20.2.7.4.1.3 The resistance between the grounded chamber hull and the electrical ground shall not exceed 1 ohm.

20.2.7.4.2 In health care facilities, electrical power circuits located within the chamber shall be supplied from an ungrounded electrical system equipped with a line isolation monitor with signal lamps and audible alarms.

20.2.7.4.2.1 Such circuits shall meet the requirements of Article 517.160, Isolated Power Systems, and 517.160(B), Line Isolation Monitor, of NFPA 70, *National Electrical Code*. Branch circuits shall not exceed 125 V or 15 A.

20.2.7.4.3 Wiring located both inside and outside the chamber, which serves line level circuits and equipment located inside the chamber, shall meet the grounding and bonding requirements of Article 501.16 of NFPA 70, *National Electrical Code*.

20.2.7.5 Wiring Outside the Chamber.

20.2.7.5.1 Those electrical components that must remain functional for the safe termination of a dive following activation of the room sprinkler system shall be enclosed in waterproof housing.

20.2.7.5.1.1 All associated conduits shall meet the following requirements:

(1) Be waterproof
(2) Meet the requirements of NFPA 70, *National Electrical Code*
(3) Be equipped with approved drains

20.2.7.5.2* All other electrical devices outside the chamber shall meet the requirements of NFPA 70.

20.2.7.6 Additional Wiring and Equipment Requirements inside Class B Chambers. The requirements in 20.2.7.6 shall apply to Class B chambers whether they are pressurized with oxygen or with air.

20.2.7.6.1 Electrical equipment inside Class B chambers shall be restricted to communication functions and patient physiological monitoring leads.

20.2.7.6.1.1 Circuits shall be designed to limit the electrical energy to wire leads into the chamber under normal or fault conditions to no more than 28 V and 0.5 W.

20.2.7.6.1.2 Communication wires shall be protected from physical damage and from coming into contact with flammable materials in the chamber by barriers or conduit.

20.2.7.6.1.3 Patient monitoring leads shall be part of approved electromedical apparatus meeting the requirements in 20.2.7.3.17.

20.2.7.6.2 Lighting inside the chamber shall be supplied from external sources.

20.2.7.6.3 No electrical circuit in a Class B chamber shall operate at a temperature exceeding 60°C (140°F).

20.2.8 Communications and Monitoring.

20.2.8.1 General.

20.2.8.1.1 Detectors, sensors, transducers, and communications equipment located inside the chamber shall meet the requirements of 20.2.7.3.16.

20.2.8.1.2 Wiring methods in the chamber shall meet the applicable requirements in 20.2.7.3.

20.2.8.1.3 The following equipment shall be installed outside the chamber or shall meet the requirements of 20.2.7.3.16:

(1) Control equipment
(2) Power amplifiers
(3) Output transformers
(4) Monitors associated with communications and monitoring equipment

20.2.8.2* Intercommunications.

20.2.8.2.1* An intercommunication system shall connect all personnel compartments (locks) and the chamber operator's control console.

20.2.8.2.2 Oxygen mask microphones shall be intrinsically safe at the maximum proposed pressure and 95 ± 5 percent oxygen.

20.2.8.3 Combustible Gas Detection.

20.2.8.3.1 The chamber atmosphere shall be continuously monitored for combustible gas concentrations whenever any volatile agents are used in the chamber *(see 20.2.4.3.3.1)*.

20.2.8.3.1.1 The monitor shall be set to provide audible and visual alarms at 10 percent lower explosive limit (LEL) for the particular gas used.

20.2.8.4 Oxygen Monitoring.

20.2.8.4.1 Oxygen levels shall be continuously monitored in any chamber in which nitrogen or other diluent gas is added

--`,,```,,,,````-`-`,,`,,`,`,,`---

Copyright National Fire Protection Association
Provided by IHS under license with NFPA
No reproduction or networking permitted without license from IHS
Not for Resale

to the chamber to reduce the volumetric concentration of oxygen in the atmosphere.

20.2.8.4.1.1 Oxygen monitors shall be equipped with audible and visual alarms.

20.2.8.4.2 Oxygen levels shall be continuously monitored in Class A chambers when breathing mixtures containing in excess of 21 percent oxygen by volume are being breathed by patients or attendants and/or any flammable agents are present in the chamber.

20.2.8.4.2.1 Audible and visual alarms shall indicate volumetric oxygen concentrations in excess of 23.5 percent.

20.2.8.5 Carbon Dioxide Monitoring. The chamber atmosphere shall be monitored for carbon dioxide levels during saturation operations whenever ventilation is not used.

20.2.8.6* Chamber Gas Supply Monitoring. The air supply of Class A and Class B chambers shall be sampled for concentrations of carbon monoxide.

20.2.8.6.1 Air supplied from oil-lubricated compressors capable of contaminating the compressor output due to wear or failure shall be continuously monitored for volatilized hydrocarbons as well as carbon monoxide at a location downstream from the oil filter when the compressors are running.

20.2.8.6.2* As a minimum, the air supplied to Class A chambers shall meet the requirements for CGA Grade D.

20.2.8.6.3 As a minimum, the air supplied to Class B chambers shall meet the requirements for CGA grade D with the additional limit of no condensable hydrocarbons.

20.2.8.7* Electrical monitoring equipment used inside the chamber shall comply with the applicable requirements of 20.2.7.

20.2.8.8* Closed-circuit TV monitoring of the chamber interior shall be employed for chamber operators who do not have direct visual contact of the chamber interior from their normal operating location.

20.2.9 Other Equipment and Fixtures.

20.2.9.1 All furniture permanently installed in the hyperbaric chamber shall be grounded.

20.2.9.2 Exhaust from all classes of chambers shall be piped outside of the building.

20.2.9.2.1 The point of exhaust shall not create a hazard.

20.2.9.2.2 The point of exhaust shall not allow reentry of gases into the building.

20.2.9.2.3 The point of exhaust shall be protected by the provision of a minimum of 0.3 cm mesh screen and situated to prevent the intrusion of rain, snow or airborne debris.

20.2.9.2.4 The point of exhaust shall be identified as an oxygen exhaust by a sign prohibiting smoking or open flame.

20.2.9.3 The supply piping for all air, oxygen, or other breathing mixtures from certified commercially supplied flasks shall be provided with a particulate filter of at least 10 microns or finer.

20.2.9.3.1 The filter shall meet the construction requirements of ANSI/ASME PVHO-1, *Safety Standard for Pressure Vessels for Human Occupancy*, and be located as close as practical to the source.

20.3 Administration and Maintenance.

20.3.1 General.

20.3.1.1 Purpose. Section 20.3 contains requirements for administration and maintenance that shall be followed as an adjunct to physical precautions specified in Section 20.2.

20.3.1.2* Recognition of Hazards. The nature and recognition of hyperbaric hazards are outlined in Annex B of this document and shall be reviewed by the safety director.

20.3.1.3 Responsibility.

20.3.1.3.1 Personnel having responsibility for the hyperbaric facility, and those responsible for licensing, accrediting, or approving institutions or other facilities in which hyperbaric installations are employed, shall establish and enforce programs to fulfill the provisions of this chapter.

20.3.1.3.2* Each hyperbaric facility shall designate an onsite hyperbaric safety director to be in charge of all hyperbaric equipment and the operational safety requirements of this chapter.

20.3.1.3.2.1 The safety director shall participate with facility management personnel and the hyperbaric physician(s) in developing procedures for operation and maintenance of the hyperbaric facility.

20.3.1.3.2.2 The safety director shall make recommendations for departmental safety policies and procedures.

20.3.1.3.2.3 The safety director shall have the authority to restrict or remove any potentially hazardous supply or equipment items from the chamber.

20.3.1.3.3* The governing board shall be responsible for the care and safety of patients and personnel.

20.3.1.3.4* By virtue of its responsibility for the professional conduct of members of the medical staff of the health care facility, the organized medical staff shall adopt and enforce regulations with respect to the use of hyperbaric facilities located in health care facilities.

20.3.1.3.4.1 The safety director shall participate in the development of these regulations.

20.3.1.3.5* The safety director shall ensure that electrical, monitoring, life support, protection, and ventilating arrangements in the hyperbaric chamber are inspected and tested as part of the routine maintenance program of the facility.

20.3.1.4 Rules and Regulations.

20.3.1.4.1* General. The administrative, technical, and professional staffs shall jointly develop policies for management of the hyperbaric facility.

20.3.1.4.1.1 Upon adoption, policies shall be available in the facility.

20.3.1.4.2 The medical director of hyperbaric medicine and the safety director shall jointly develop the minimum staff qualifications, experience, and complement based on the following:

(1) The number and type of hyperbaric chambers in use
(2) Maximum treatment capacity
(3) The type of hyperbaric therapy normally provided

20.3.1.4.3 All personnel, including those involved in maintenance and repair of the hyperbaric facility, shall be trained on the purpose, application, operation, and limitations of emergency equipment.

Copyright National Fire Protection Association
Provided by IHS under license with NFPA
No reproduction or networking permitted without license from IHS
Not for Resale

20.3.1.4.4 Emergency procedures specific to the hyperbaric facility shall be established.

20.3.1.4.4.1* All personnel shall be trained on emergency procedures.

20.3.1.4.4.2 Personnel shall be trained to control the chamber and decompress occupants when all powered equipment has been rendered inoperative.

20.3.1.4.5* Emergency procedures and fire training drills shall be conducted at least annually and documented by the safety director.

20.3.1.4.6* When an inspection, test, or maintenance procedure of the fire suppression system results in the system being placed OUT OF SERVICE, a protocol shall be followed that notifies appropriate personnel and agencies of the planned or emergency impairment. A sign indicating the fire suppression system is OUT OF SERVICE shall be conspicuously placed on the operating console until the fire suppression system is restored to service.

20.3.1.4.7 During chamber operations with occupant(s) in a chamber, the operator shall be physically present, and shall maintain visual or audible contact with the control panel or the chamber occupant(s).

20.3.1.5 General Requirements.

20.3.1.5.1* Potential Ignition Sources.

20.3.1.5.1.1 The following shall be prohibited from inside the chamber and the immediate vicinity outside the chamber:

(1) Smoking
(2) Open flames
(3) Hot objects

20.3.1.5.1.2 The following shall be prohibited from inside the chamber:

(1) Personal warming devices (i.e., therapeutic chemical heating pads, handwarmers, pocket warmers)
(2) Cell phones and pagers
(3) Sparking toys
(4) Personal entertainment devices

20.3.1.5.2 Flammable Gases and Liquids.

20.3.1.5.2.1 Flammable agents (including devices such as laboratory burners employing bottled or natural gas and cigarette lighters) shall be prohibited inside the chamber and from the proximity of the compressor intake.

20.3.1.5.2.2 For Class A chambers, flammable agents used for patient care, such as alcohol swabs, parenteral alcohol-based pharmaceuticals, and topical creams, shall be permitted in the chamber if the following conditions are met:

(1) Such use is approved by the safety director, or other authority having jurisdiction.
(2)*The quantities of such agents are limited so that they are incapable of releasing sufficient flammable vapor into the chamber atmosphere to exceed the LEL for the material.
(3) A safety factor shall be included to account for the localized concentrations, stratification, and the absence of ventilation.
(4) The oxygen monitoring requirement of 20.2.8.4.2 is observed.

20.3.1.5.2.3 Flammable liquids, gases, or vapors shall not be permitted inside any Class B chamber.

20.3.1.5.3* Personnel.

20.3.1.5.3.1 Antistatic procedures as directed by the safety director shall be employed whenever atmospheres containing more than 23.5 percent oxygen by volume are used.

20.3.1.5.3.2 In Class A and Class B chambers with atmospheres containing more than 23.5 percent oxygen by volume, electrical grounding of the patient shall be ensured by the provision of a high-impedance conductive pathway in contact with the patient's skin.

20.3.1.5.3.3 Shoes having ferrous nails that make contact with the floor shall not be permitted to be worn in Class A chambers.

20.3.1.5.4* Textiles.

20.3.1.5.4.1 Silk, wool, or synthetic textile materials shall not be permitted in Class A or Class B chambers unless the fabric meets the flame resistant requirements of 20.3.1.5.4.5.

20.3.1.5.4.2 Garments fabricated of 100 percent cotton or a blend of cotton and polyester fabric shall be permitted in Class A chambers equipped with fire protection as specified in 20.2.5, and in Class B chambers.

20.3.1.5.4.3 The physician or surgeon in charge, with the concurrence of the safety director, shall be permitted to use prohibited items in the chamber that are one of the following:

(1) Suture material
(2) Alloplastic devices
(3) Bacterial barriers
(4) Surgical dressings
(5) Biological interfaces

20.3.1.5.4.4 Physician and safety director approval to use prohibited items shall be stated in writing for all prohibited materials employed *(see A.20.3.1.3.2)*.

20.3.1.5.4.5 Where flame resistance is specified, the fabric shall meet the requirements set forth for the small-scale test in NFPA 701, *Standard Methods of Fire Tests for Flame Propagation of Textiles and Films*, in an atmosphere equivalent to the maximum oxygen concentration and pressure proposed for the chamber.

20.3.1.5.5 The use of flammable hair sprays, hair oils, and skin oils shall be forbidden for all chamber occupants/patients as well as personnel.

20.3.1.5.5.1 Whenever possible, patients shall be stripped of all clothing, particularly if it is contaminated by dirt, grease, or solvents, and then reclothed. *(See A.20.3.1.5.4.)*

20.3.1.5.5.2 All cosmetics, lotions, and oils shall be removed from the patient's body and hair.

20.3.1.5.6 All other fabrics used in the chamber such as sheets, drapes, and blankets shall conform to 20.3.1.5.4.1 and 20.3.1.5.4.2.

20.3.1.5.7 Clothing worn by patients in Class A or B chambers and personnel in Class A chambers shall conform to the following:

(1) Be issued by the hyperbaric facility or specifically approved by the safety director for hyperbaric use
(2) Be uncontaminated
(3) Be devoid of prohibited articles prior to chamber pressurization

Copyright National Fire Protection Association
Provided by IHS under license with NFPA
No reproduction or networking permitted without license from IHS
Not for Resale

20.3.2 Equipment.

20.3.2.1 All equipment used in the hyperbaric chamber shall comply with Section 20.2, including the following:

(1) All electrical and mechanical equipment necessary for the operation and maintenance of the hyperbaric facility
(2) Any medical devices and instruments used in the facility

20.3.2.1.1 Use of unapproved equipment shall be prohibited. *(See 20.3.1.5.4.3.)*

20.3.2.1.2 The following devices shall not be operated in the hyperbaric chamber unless approved by the safety director for such use:

(1) Portable X-ray devices
(2) Electrocautery equipment
(3) High-energy devices

20.3.2.1.3 Photographic equipment employing the following shall not remain in the chamber when the chamber is pressurized:

(1) Photoflash
(2) Flood lamps

20.3.2.1.4 Lasers shall not be used under any condition.

20.3.2.1.5 Equipment known to be, or suspected of being, defective shall not be introduced into any hyperbaric chamber or used in conjunction with the operation of such chamber until repaired, tested, and accepted by qualified personnel and approved by the safety director *(see 20.3.1.3.2)*.

20.3.2.1.6* Paper brought into the chamber shall be stored in a closed metal container. Containers used for paper storage shall be emptied after each chamber operation.

20.3.2.1.7 Equipment that does not meet the temperature requirements of Article 500.8(A), 500.8(B), and 500.8(C) of NFPA 70, *National Electrical Code*, shall not be allowed in the chamber.

20.3.2.2* The following shall be all metal to the extent possible:

(1) Oxygen containers
(2) Valves
(3) Fittings
(4) Interconnecting equipment

20.3.2.3 The following shall be compatible with oxygen under service conditions:

(1) Valve seats
(2) Gaskets
(3) Hose
(4) Lubricants

20.3.2.4 Equipment used inside the chamber requiring lubrication shall be lubricated with oxygen-compatible flame-resistant material.

20.3.2.4.1 Factory-sealed antifriction bearings shall be permitted to be used with standard hydrocarbon lubricants in Class A chambers that do not employ atmospheres of increased oxygen concentration.

20.3.2.5* Equipment made of the following shall be prohibited from the chamber interior:

(1) Cerium
(2) Magnesium
(3) Magnesium alloys

20.3.2.6* In the event that radiation equipment is introduced into a hyperbaric chamber, hydrocarbon detectors shall be installed.

20.3.2.6.1 In the event that flammable gases are detected in excess of 1000 ppm, radiation equipment shall not be operated until the chamber atmosphere is cleared.

20.3.3 Handling of Gases.

20.3.3.1 The institution's administrative personnel shall develop policies for safe handling of gases in the hyperbaric facility *(see 20.3.1.5.2 and C.20.1.1.3.2)*.

20.3.3.2 Oxygen and other gases shall not be introduced into the chamber in the liquid state.

20.3.3.3 Flammable gases shall not be used or stored in the chamber or in the hyperbaric facility.

20.3.3.4* Pressurized containers of gas shall be permitted to be introduced into the hyperbaric chamber, provided that the container and its contents are approved for such use by the safety director.

20.3.4 Maintenance.

20.3.4.1 General.

20.3.4.1.1 The hyperbaric safety director shall ensure that all valves, regulators, meters, and similar equipment used in the hyperbaric chamber are compensated for use under hyperbaric conditions and tested as part of the routine maintenance program of the facility.

20.3.4.1.1.1 Pressure relief valves shall be tested and calibrated as part of the routine maintenance program of the facility.

20.3.4.1.2 The hyperbaric safety director shall ensure that all gas outlets in the chambers are labeled or stenciled in accordance with CGA C-4, *Standard Method of Marking Portable Compressed Gas Containers to Identify the Material Contained*.

20.3.4.1.3 Before piping systems are initially put into use, it shall be ascertained that the gas delivered at the outlet is shown on the outlet label and that connecting fittings are checked against their labels, in accordance with Sections 5.1 through 5.3.

20.3.4.1.4 The requirements set forth in Section 5.1 concerning the storage, location, and special precautions required for compressed gases shall be followed. Reserve supplies and master alarm signals shall meet the requirements of Section 5.2.

20.3.4.1.5 Storage areas for hazardous materials shall not be located in the room housing the hyperbaric chamber *(see 20.2.1)*.

20.3.4.1.5.1 Flammable gases, except as provided in 20.3.1.5.2.2(1), shall not be used or stored in the hyperbaric room.

20.3.4.1.6 All replacement parts and components shall conform to original design specification.

20.3.4.2 Maintenance Logs.

20.3.4.2.1 Installation, repairs, and modifications of equipment related to a chamber shall be evaluated by engineering personnel, tested under pressure, and approved by the safety director.

20.3.4.2.1.1 Logs of all tests shall be maintained.

20.3.4.2.2 Operating equipment logs shall be maintained by engineering personnel.

Copyright National Fire Protection Association
Provided by IHS under license with NFPA
No reproduction or networking permitted without license from IHS
Not for Resale

20.3.4.2.2.1 Operating equipment logs shall be signed before chamber operation by the person in charge *(see A.20.3.1.3.2)*.

20.3.4.2.3 Operating equipment logs shall not be taken inside the chamber.

20.3.5 Electrical Safeguards.

20.3.5.1 Electrical equipment shall be installed and operated in accordance with 20.2.7.

20.3.5.1.1 All electrical circuits shall be tested in accordance with the routine maintenance program of the facility.

20.3.5.1.1.1 Electrical circuit test shall include the following:

(1) A ground fault check to verify that no conductors are grounded to the chamber
(2) A test of normal functioning *(see 20.2.7.2.2)*

20.3.5.1.2 In the event of fire, all nonessential electrical equipment within the chamber shall be deenergized before extinguishing the fire.

20.3.5.1.2.1 Smoldering, burning electrical equipment shall be deenergized before extinguishing a localized fire involving only the equipment *(see 20.2.5)*.

20.3.6* Electrostatic Safeguards.

20.3.6.1 Administration. (Reserved)

20.3.6.2 Maintenance.

20.3.6.2.1* Conductive Floors. See E.6.6.8, Reduction in Electrostatic Hazard, for recommendations on chambers containing conductive floors.

20.3.6.2.2 Furniture Used in the Chamber.

20.3.6.2.2.1* Conductive devices on furniture and equipment shall be inspected to ensure that they are free of wax, lint, or other extraneous material that could insulate them and defeat the conductive properties.

20.3.6.2.2.2 Casters or furniture leg tips shall not be capable of impact sparking.

20.3.6.2.2.3 Casters shall not be lubricated with oils or other flammable materials.

20.3.6.2.2.4 Lubricants shall be oxygen compatible and flame resistant.

20.3.6.2.2.5 Wheelchairs and gurneys with bearings lubricated and sealed by the manufacturer shall be permitted in Class A chambers where conditions prescribed in 20.2.8.4 are met.

20.3.6.2.3* Conductive Accessories. Conductive accessories shall meet conductivity and antistatic requirements.

20.3.6.2.4* Materials containing rubber shall be inspected as part of the routine maintenance program of the facility, especially at points of kinking.

20.3.6.3 Fire Protection Equipment. Electrical switches, valves, and electrical monitoring equipment associated with fire detection and extinguishment shall be visually inspected before each chamber pressurization. Fire detection equipment shall be tested each week and full testing, including discharge of extinguishing media, shall be conducted annually. Testing shall include activation of trouble circuits and signals.

20.3.6.4* Housekeeping. A housekeeping program shall be implemented whether or not the facility is in regular use.

20.3.6.4.1 The persons assigned to this task shall be trained in the following:

(1) Potential damage to the equipment from cleaning procedures
(2) Potential personal injury
(3) Specific cleaning procedures
(4) Equipment not to be cleaned

Chapter 21 Freestanding Birthing Centers

21.1 Applicability. This chapter applies to freestanding birth centers, as defined in Chapter 3.

21.2 Responsibilities. (Reserved)

21.3 General Requirements.

21.3.1 Reserved.

21.3.2 Reserved.

21.3.3 Reserved.

21.3.4 Electrical System Requirements. Electrical systems used in freestanding birthing centers shall conform to such requirements of Chapter 4 as applicable.

21.3.5 Gas and Vacuum System Requirements. Gas and vacuum systems used in freestanding birthing centers shall conform to such requirements of Chapter 5 as applicable.

21.3.6 Reserved.

21.3.7 Reserved.

21.3.8 Electrical Equipment Requirements. Electrical equipment used in freestanding birthing centers shall conform to such requirements of Chapter 8 as applicable.

21.3.9 Gas Equipment Requirements. Gas equipment used in freestanding birthing centers shall conform to such requirements of Chapter 9 as applicable.

Annex A Explanatory Material

Annex A is not a part of the requirements of this NFPA document but is included for informational purposes only. This annex contains explanatory material, numbered to correspond with the applicable text paragraphs.

A.1.1.11.1(3) Although this subsection deals primarily with hazards related to fires and explosions, many of the requirements to protect against fire or explosion, such as those for hood exhaust systems, also serve to protect persons from exposure to nonfire health hazards of these materials.

A.1.1.12 Because no single model of an emergency management plan is feasible for every health care facility, this chapter is intended to provide criteria in the preparation and implementation of an individual plan. The principles involved are universally applicable; the implementation needs to be tailored to the specific facility.

A.1.1.20 During the past 20 years there has been a widespread interest in the use of oxygen at elevated environmental pressure to increase the partial pressure of oxygen in a patient's tissues in order to treat certain medical conditions or to prepare a patient for surgery. These techniques are also employed widely for the

Copyright National Fire Protection Association
Provided by IHS under license with NFPA
No reproduction or networking permitted without license from IHS
Not for Resale

treatment of decompression sickness (e.g., bends, caisson worker's disease) and carbon monoxide poisoning.

Recently, however, the level of knowledge and expertise has increased so dramatically that the codes are in need of updating. By the end of 1988, there were 218 hyperbaric facilities in operation in the U.S. and Canada. These facilities supported hyperbaric medical treatments for 62,548 patients between 1971 and 1987. As these facilities provide therapy for disorders indicated for treatment, these numbers will continue to increase. As the number of facilities increases, the number of patients treated will also increase.

Such treatment involves placement of the patient, with or without attendants, in a hyperbaric chamber or pressure vessel, the pressure of which is raised above ambient pressure. In the course of the treatment, the patient breathes up to 100 percent oxygen.

In addition to being used for patient care, these chambers also are being employed for research purposes using experimental animals and, in some instances, humans.

The partial pressure of oxygen present in a gaseous mixture is the determinate factor of the amount of available oxygen. This pressure will rise if the volume percentage of oxygen present increases, or if the total pressure of a given gas mixture containing oxygen increases, or if both factors increase. Because the sole purpose of the hyperbaric technique of treatment is to raise the total pressure within the treatment chamber, an increased partial pressure of oxygen always is available during treatment unless positive means are taken to limit the oxygen content. In addition, the patient is often given an oxygen-enriched atmosphere to breathe.

There is continual need for human diligence in the establishment, operation, and maintenance of hyperbaric facilities. It is the responsibility of the chief administrator of the facility possessing the hyperbaric chamber to adopt and enforce appropriate regulations for hyperbaric facilities. In formulating and administering the program, full use should be made of technical personnel highly qualified in hyperbaric chamber operations and safety.

It is essential that personnel having responsibility for the hyperbaric facility establish and enforce appropriate programs to fulfill the provisions of Chapter 20.

Potential hazards can be controlled only when continually recognized and understood by all pertinent personnel.

The purpose of this chapter is to set forth minimum safeguards for the protection of patients or other subjects of, and personnel administering, hyperbaric therapy and experimental procedures. Its purpose is also to offer some guidance for rescue personnel who are not ordinarily involved in hyperbaric chamber operation, but who could become so involved in an emergency.

Requirements cited in 1.1.20 are minimum ones. Discretion on the part of chamber operators and others might dictate the establishment of more stringent regulations.

A.1.5.1 Trade units vary from SI to U.S. customary units depending on the equipment devices or material.

A.3.2.1 Approved. The National Fire Protection Association does not approve, inspect, or certify any installations, procedures, equipment, or materials; nor does it approve or evaluate testing laboratories. In determining the acceptability of installations, procedures, equipment, or materials, the authority having jurisdiction may base acceptance on compliance with NFPA or other appropriate standards. In the absence of such standards, said authority may require evidence of proper installation, procedure, or use. The authority having jurisdiction may also refer to the listings or labeling practices of an organization that is concerned with product evaluations and is thus in a position to determine compliance with appropriate standards for the current production of listed items.

A.3.2.2 Authority Having Jurisdiction (AHJ). The phrase "authority having jurisdiction," or its acronym AHJ, is used in NFPA documents in a broad manner, since jurisdictions and approval agencies vary, as do their responsibilities. Where public safety is primary, the authority having jurisdiction may be a federal, state, local, or other regional department or individual such as a fire chief; fire marshal; chief of a fire prevention bureau, labor department, or health department; building official; electrical inspector; or others having statutory authority. For insurance purposes, an insurance inspection department, rating bureau, or other insurance company representative may be the authority having jurisdiction. In many circumstances, the property owner or his or her designated agent assumes the role of the authority having jurisdiction; at government installations, the commanding officer or departmental official may be the authority having jurisdiction.

A.3.2.3 Code. The decision to designate a standard as a "code" is based on such factors as the size and scope of the document, its intended use and form of adoption, and whether it contains substantial enforcement and administrative provisions.

A.3.2.6 Listed. The means for identifying listed equipment may vary for each organization concerned with product evaluation; some organizations do not recognize equipment as listed unless it is also labeled. The authority having jurisdiction should utilize the system employed by the listing organization to identify a listed product.

A.3.3.9 Anesthetizing Location. For guidance on flammable anesthetizing locations, see Annex E.

A.3.3.12 Applicator. In the given sense, an applicator is not an electrode because it does not use a conductive connection to the patient in order to function. A radio frequency "horn" of a diathermy machine is a typical applicator.

A.3.3.14 Atmosphere. As employed in this standard, *atmosphere* can refer to the environment within or outside of a hyperbaric facility. When used as a measure of pressure, atmosphere is expressed as a fraction of standard air pressure [101.4 kPa (14.7 psi)]. *(See Column 1 of the Pressure Table in Annex D of NFPA 99B.)*

A.3.3.14.3 Atmosphere of Increased Burning Rate. The degree of fire hazard of an oxygen-enriched atmosphere varies with the concentration of oxygen and diluent gas and the total pressure. The definition contained in the current edition of NFPA 53, *Recommended Practice on Materials, Equipment, and Systems Used in Oxygen-Enriched Atmospheres* and in editions of NFPA 56D, *Standard for Hyperbaric Facilities*, prior to 1982, did not necessarily reflect the increased fire hazard of hyperbaric and hypobaric atmospheres.

The definition of atmosphere of increased burning rate used in Chapter 20 and in NFPA 99B, *Standard for Hypobaric Facilities*, defines an oxygen-enriched atmosphere with an increased fire hazard, as it relates to the increased burning rate of material in the atmosphere. It is based on a 1.2 cm/sec (0.47 in./sec) burning rate (at 23.5 percent oxygen at 1 atmosphere absolute) as described in Figure A.3.3.14.3.

Copyright National Fire Protection Association
Provided by IHS under license with NFPA
No reproduction or networking permitted without license from IHS
Not for Resale

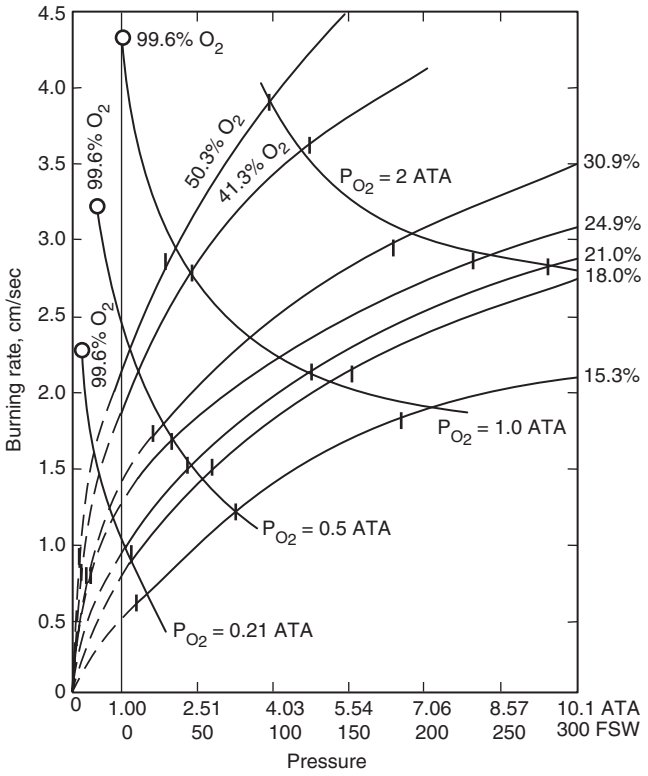

ATA = Atmospheres absolute
FSW = Feet of sea water

FIGURE A.3.3.14.3 Burning Rates of Filter Paper Strips at an Angle of 45 Degrees in N_2–O_2 Mixtures. (Adapted from Figure 4 of "Technical Memorandum UCRI-720, Chamber Fire Safety.")

This rate can be determined as follows:

$$\frac{23.45}{\sqrt{TP_{atmos}}}$$

where:
TP_{atmos} = total pressure in atmospheres

A.3.3.16 Bends. See C.20.1.3.4.2.

A.3.3.19.2 Bulk Oxygen System. The oxygen containers can be stationary or movable, and the oxygen can be stored as gas or liquid. The bulk oxygen system terminates at the point where oxygen at service pressure first enters the supply line.

A.3.3.22 Combustible Liquid. See NFPA 30, *Flammable and Combustible Liquids Code*, for further information on flash point test procedures.

A.3.3.23 Combustion. Combustion is not limited to a chemical reaction always involving oxygen. Certain metals, such as calcium and aluminum, will burn in nitrogen; nitrous oxide will support the combustion of phosphorus and carbon; and so on. However, this document deals with the more common process of fuels burning in air.

A.3.3.33 Direct Electrical Pathway to the Heart. Electrodes, such as those used for pacing the heart, and catheters filled with conductive fluids, are examples of direct electrical pathways to the heart.

A.3.3.34 Disaster. A disaster can be either an event that causes or threatens to cause physical damage and injury to facility personnel or patients within the facility, or an event that requires expansion of facilities to receive and care for a large number of casualties resulting from a disaster that produces no damage or injury to the health care facility and staff, or a combination thereof.

Such a situation creates the need for emergency expansion of facilities, as well as operation of this expanded facility in an unfamiliar environment. Under this definition, the recognition of a disaster situation will vary greatly from one facility to another and from time to time in any given facility. Such recognition and concomitant activation of the Health Care Emergency Preparedness Plan is dependent on mutual aid agreements, facility type, geographic location, bed capacity, bed occupancy at a given time, staff size, staff experience with disaster situations, and other factors. For example, the routine workload of the emergency department of a large metropolitan general hospital would constitute a disaster, requiring activation of the Health Care Emergency Preparedness Plan, were this same workload to be suddenly applied to a small community hospital.

Disasters have a variety of causes, all of which should be considered for effective emergency preparedness planning. Among the most common are natural disasters such as earthquakes, hurricanes, tornadoes, and floods; mass food poisoning; industrial accidents involving explosion or environmental release of toxic chemicals; transportation accidents involving crashes of trains, planes, or automobiles with resulting mass casualties; civil disturbances; building fires; extensive or prolonged utility failure; collapse of buildings or other occupied structures; and toxic smogs in urban areas. Arson attempts and bomb threats have been made on health care facilities and should therefore be considered. Potential admission to the facility of high profile persons should be addressed. Although the last does not involve mass casualties or the potential of mass casualties, the degree of disruption of normal routine will be sufficient to qualify it as a disasterlike situation.

Disaster plans should reflect a facility's location from internal and external disasters. As an example, areas subject to frequent wildland fires should invoke countermeasures for smoke management and air quality maintenance.

A.3.3.36 Double-Insulated Appliances. Double-insulated appliances can be identified by a symbol consisting of a square within a square, or wording such as "double-insulated" marked on the appliance. Appliance packaging and documents may also provide identification. Although double-insulated appliances do not require a third wire or pin, some double-insulated appliances have a third conductor or pin solely for purposes of electro-magnetic compatibility (EMC).

A.3.3.38.3 Dispersive Electrode. This electrode is often called the grounding electrode, the "indifferent electrode," the "return electrode," the "patient ground plate," or the "neutral electrode."

A.3.3.47 Failure. Failure includes failure of a component, loss of normal protective paths such as grounding, and short circuits or faults between energized conductors and the chassis.

A.3.3.50 Flame Resistant. A source of ignition alternate to the gas burner specified in NFPA 701, *Standard Methods of Fire Tests for Flame Propagation of Textiles and Films*, could be required for this test if it is to be performed in 100 percent oxygen at several atmospheres pressure.

Copyright National Fire Protection Association
Provided by IHS under license with NFPA
No reproduction or networking permitted without license from IHS
Not for Resale

A.3.3.51 Flammable. Flammables may be solids, liquids, or gases exhibiting these qualities. Many substances nonflammable in air become flammable if the oxygen content of the gaseous medium is increased above 0.235 ATA.

A.3.3.54 Flash Point. See C.11.2.2.

A.3.3.58 Frequency. Formerly the unit of frequency was cycles per second, a terminology no longer preferred. The waveform can consist of components having many different frequencies, in which case it is called a complex or nonsinusoidal waveform.

A.3.3.59 Fume Hood. Laboratory fume hoods prevent toxic, flammable, or noxious vapors from entering the laboratory, present a physical barrier from chemical reactions, and serve to contain accidental spills.

This definition does not include canopy hoods or recirculation laminar-flow biological-safety cabinets that are not designed for use with flammable materials.

A.3.3.65 Grounding System. It coordinates with, but can be locally more extensive than, the grounding system described in Article 250 of NFPA 70, *National Electrical Code*.

A.3.3.67 Hazardous Chemical. For hazard ratings of many chemicals, see NFPA 49, *Hazardous Chemicals Data*, and NFPA 325, *Guide to Fire Hazard Properties of Flammable Liquids, Gases, and Volatile Solids*, both available in NFPA's *Fire Protection Guide to Hazardous Materials*. *(See also C.11.2.3).*

A.3.3.68 Health Care Facilities. Health care facilities include, but are not limited to, hospitals, nursing homes, limited care facilities, clinics, medical and dental offices, and ambulatory health care centers, whether permanent or movable.

A.3.3.78 Impedance. The circuit element can consist of any combination of resistance, capacitance, or inductance.

A.3.3.82 Intrinsically Safe. Abnormal conditions can include accidental damage to any part of the equipment or wiring, insulation or other failure of electrical components, application of overvoltage, adjustment and maintenance operations, and other similar conditions.

A.3.3.85 Isolated Power System. See NFPA 70, *National Electrical Code*.

A.3.3.87 Laboratory. These laboratories are not intended to include isolated frozen section laboratories; areas in which oxygen is administered; blood donor rooms in which flammable, combustible, or otherwise hazardous materials normally used in laboratory procedures are not present; and clinical service areas not using hazardous materials.

A.3.3.88 Laboratory Work Area. See NFPA 45, *Standard on Fire Protection for Laboratories Using Chemicals*.

A.3.3.93 Level 3 Compressed Air System. The system does not produce air to meet the medical requirements of medical air and is not intended to be used for air life support devices.

A.3.3.95 Level 3 Piped Vacuum System. The system is not intended for Level 1 vacuum applications. A wet piping system is designed to accommodate liquid, air–gas, and solids through the service inlet. A dry piping system is designed to accommodate air–gas only through the service inlet. [Liquid(s) and solid(s) are trapped before entering the service inlet.]

A.3.3.98 Limited-Combustible Material. Materials subject to increase in combustibility or flame-spread rating beyond the limits herein established through the effects of age, moisture, or other atmospheric condition are considered combustible.

See NFPA 259, *Standard Test Method for Potential Heat of Building Materials*.

A.3.3.100 Liquid. When not otherwise identified, the term *liquid* includes both flammable and combustible liquids. *(See also C.11.2.1.)*

A.3.3.101 Local Signal. Examples would include a light to indicate a compressor is operating or a cylinder header is in use or a flag attached to a manual changeover valve to indicate which side is in use.

A.3.3.104 Manufactured Assembly. Examples are headwalls, columns, ceiling columns, ceiling hung pendants, movable track systems, and so on.

A.3.3.106 Medical Air. Air supplied from on-site compressor and associated air treatment systems (as opposed to medical air USP supplied in cylinders) that complies with the specified limits is considered medical air. Hydrocarbon carryover from the compressor into the pipeline distribution system could be detrimental to the safety of the end user and to the integrity of the piping system. Mixing of air and oxygen is a common clinical practice, and the hazards of fire are increased if the air is thus contaminated. Compliance with these limits is thus considered important to fire and patient safety. The quality of local ambient air should be determined prior to its selection for compressors and air treatment equipment.

A.3.3.108 Medical/Dental Office. Examples include dental office/clinic, medical office/clinic, immediate care facility, and podiatry office.

A.3.3.121 Nitrogen Narcosis. See C.20.1.3.2.2.

A.3.3.125 Noncombustible Material. Materials reported as noncombustible, when tested in accordance with ASTM E 136, *Standard Test Method for Behavior of Materials in a Vertical Tube Furnace at 750°C*, are considered noncombustible materials.

A.3.3.127 Nonflammable Anesthetic Agent. It is possible to halogenate a compound and render it partially or totally nonflammable by the substitution of one or more halogens (e.g., fluorine, chlorine, bromine) for hydrogen. Thus halothane ($CF_3CHClBr$) is almost completely halogenated and is nonflammable. Methoxyflurane ($CHF_2CCl_2OCH_3$) is partially halogenated and is nonflammable in conditions encountered during clinical anesthesia (if it is heated, its vapor concentration will increase enough to burn). Fluroxene ($CF_3CH_2OCHCH_2$) is halogenated even less; it is flammable in concentrations of 4 percent or greater.

The following agents are considered flammable during conditions of clinical use in anesthesia:

(1) Cyclopropane
(2) Divinyl ether
(3) Ethyl chloride
(4) Ethylene
(5) Ethyl ether

The following agent is flammable during use in clinical anesthesia in higher concentrations: Fluroxene. Because fluroxene is flammable under certain conditions of use, it is listed as a flammable agent. Concentrations required for induction of anesthesia generally exceed 4 percent and are flammable. Maintenance of fluroxene anesthesia can be accomplished with concentrations of less than 4 percent, however.

Copyright National Fire Protection Association
Provided by IHS under license with NFPA
No reproduction or networking permitted without license from IHS
Not for Resale

The following agents are nonflammable during conditions of use in clinical anesthesia:

(1) Chloroform
(2) Halothane
(3) Methoxyflurane
(4) Nitrous oxide
(5) Trichloroethylene
(6) Enflurane

A.3.3.128 Nonflammable Medical Gas System. See Chapter 5, Gas and Vacuum Systems.

A.3.3.130 Oxidizing Gas. Oxygen and nitrous oxide are examples of oxidizing gases. There are many others, including halogens.

A.3.3.131 Oxygen. Its outstanding property is its ability to sustain life and to support combustion. Although oxygen is nonflammable, materials that burn in air will burn much more vigorously and create higher temperatures in oxygen or in oxygen-enriched atmospheres.

A.3.3.131.2 Liquid Oxygen. If spilled, the liquid can cause frostbite on contact with skin.

A.3.3.132 Oxygen Delivery Equipment. If an enclosure such as a mask, hood, incubator, canopy, or tent is used to contain the oxygen-enriched atmosphere, then that enclosure is considered to be oxygen delivery equipment.

A.3.3.136 Oxygen Toxicity (Hyperbaric). Under the pressures and times of exposure normally encountered in hyperbaric treatments, toxicity is a direct function of concentration and time of exposure. *(See also C.20.1.3.2.3.)*

A.3.3.138 Patient Care Area. Business offices, corridors, lounges, day rooms, dining rooms, or similar areas typically are not classified as patient care areas.

A.3.3.138.1 Critical Care Areas. For the purpose of this standard, the use of intravenous needles or catheters used to administer fluids and/or medications, endoscopes, colonscopes, sigmoidscopes, and urinary catheters are not considered invasive.

A.3.3.138.2 General Care Areas. In such areas, patients could be connected to patient-care–related electrical appliances (such as heating pads, electrocardiographs, drainage pumps, monitors, otoscopes, ophthalmoscopes, intravenous lines, etc.).

A.3.3.142 Patient Lead. This can be a surface contact (e.g., an ECG electrode); an invasive connection (e.g., implanted wire or catheter); or an incidental long-term connection (e.g., conductive tubing).

It is not intended to include adventitious or casual contacts such as a push button, bed surface, lamp, hand-held appliance, and so forth.

Also see 3.3.84, Isolated Patient Lead.

A.3.3.148.5 Partial Pressure. The pressure contributed by other gases in the mixture is ignored. For example, oxygen is one of the constituents of air; the partial pressure of oxygen in standard air, at a standard air pressure of 14.7 psia, is 3.06 psia or 0.208 ATA or 158 mm Hg.

A.3.3.148.7 Working Pressure. A pipeline working pressure of 2.9 to 3.2 kg/cm^2 (50 to 55 psig) is conventional because medical gas equipment is generally designed and calibrated for use at this pressure.

A.3.3.149 Pressure-Reducing Regulator. In hospitals, the term *regulator* is frequently used to describe a regulator that incorporates a flow-measuring device.

A.3.3.152 psig. Under standard conditions, 0 psig is equivalent to 14.7 psia.

A.3.3.155 Reactive Material. See Table C.11.2.3.3 for definitions of Reactivity 3 and Reactivity 4.

A.3.3.157 Refrigerating Equipment. It includes refrigerators, freezers, and similar equipment.

A.3.3.159 Remote. A gas storage supply system can be remote from the single treatment facility, but all use points must be contiguous within the facility.

A.3.3.169 Single Treatment Facility. The definition of single treatment facility was established to take into consideration principally single-level installations or those of a practice that could be two-level, but are reached by open stairs within the confines of the single treatment facility. See Figure A.3.3.169.

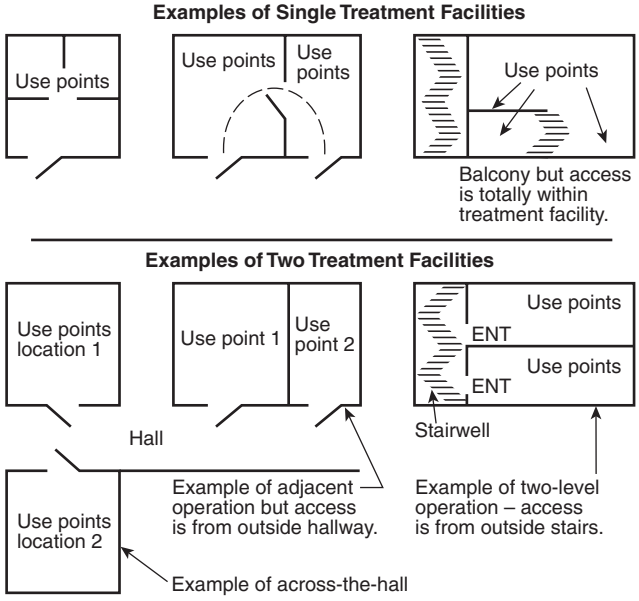

FIGURE A.3.3.169 Examples of Treatment Facilities.

A.3.3.170 Site of Intentional Expulsion. This definition addresses the site of intended expulsion. Actual expulsion can occur at other sites remote from the intended site due to disconnections, leaks, or rupture of gas conduits and connections. Vigilance on the part of the patient care team is essential to ensure system integrity.

For example, for a patient receiving oxygen via a nasal cannula or face mask, the site of expulsion normally surrounds the mask or cannula; for a patient receiving oxygen while enclosed in a canopy or incubator, the site of intentional expulsion normally surrounds the openings to the canopy or incubator; for a patient receiving oxygen while on a ventilator, the site of intentional expulsion normally surrounds the venting port on the ventilator.

A.3.3.175 Surface-Mounted Medical Gas Rail Systems. It is the intent that surface-mounted medical gas rail systems would be permitted in individual patient rooms but would not

Copyright National Fire Protection Association
Provided by IHS under license with NFPA
No reproduction or networking permitted without license from IHS
Not for Resale

be allowed to go directly through room walls to adjacent patient rooms. However, it is the intent to allow surface-mounted medical gas rails to be used in a given critical care area where there can be a partition separating certain patient care functions, essentially leaving the system within the given critical care area. As an example, two adjacent patient rooms outside of a critical care unit would not be permitted to have a surface-mounted medical gas rail interconnect between the two rooms through the wall. However, in a nursery where there might be one or two segregated areas for isolation, a medical gas rail system supplying more than one isolation room, but within the nursery area, would be permitted to be interconnected with the nursery system.

A.3.3.178.1 Endotracheal Tube. An endotracheal tube can be equipped with an inflatable cuff.

A.3.3.178.2 Tracheotomy Tube. A tracheotomy tube can be equipped with an inflatable cuff.

A.3.3.179 Unattended Laboratory Operation. Absence for even short periods without coverage by a knowledgeable person constitutes an unattended laboratory operation.

A.3.3.181 Utility Center (J box). A utility center typically includes electrical receptacle(s), compressed air, nitrogen, vacuum, and water.

A.3.3.183 WAGD Interface. Interfaces are provided with overpressure, underpressure, overflow, and underflow compensation to ensure the breathing circuit is isolated from the WAGD system.

A.3.3.185 Wet Locations. Routine housekeeping procedures and incidental spillage of liquids do not define a wet location.

A.4.1 The application of requirements contained in Chapter 4 for specific types of health care facilities can be found in Chapters 13, 14, 17, 18, and 21.

Although complete compliance with this chapter is desirable, variations in existing health care facilities should be considered acceptable in instances where wiring arrangements are in accordance with prior editions of this document or afford an equivalent degree of performance and reliability. Such variations could occur, particularly with certain wiring in separate or common raceways, with certain functions connected to one or another system or branch, or with certain provisions for automatically or manually delayed restoration of power from the alternate (emergency) source of power.

A.4.2.1 Electrical systems can be subject to the occurrence of electrical fires. Grounding systems, overcurrent protective devices, and other subjects discussed in this standard could be intended for fire prevention as well as other purposes. This aspect of electrical systems is the primary focus of other NFPA standards and will not be emphasized herein.

A.4.3.2.2 For additional wiring requirements for anesthetizing locations, see 13.4.1.

A.4.3.2.2.1 At the time of installation of regular voltage wiring, steps should be taken to ensure that the insulation on each conductor intended to be energized, or on quiet grounds, has not been damaged in the process of installation. When disconnected and unenergized, the resistance should be at least 20 megohms when measured with an ohmmeter having an open-circuit test voltage of at least 500 V dc.

Consideration should be given to providing reasonable accessibility to branch-circuit switching and overcurrent protection devices by the hospital staff in the patient care area. Consideration should also be given to providing labels at each receptacle and on installed equipment as to the location and identity of the distribution panel serving that power outlet or equipment, especially where the location or identity might not be readily apparent.

A.4.3.2.2.1.1 The requirement that branch circuits be fed from not more than one distribution panel was introduced for several reasons. A general principle is to minimize possible potential differences between the grounding pins of receptacles in one area by bringing the grounding conductors to a common point. A specific reason is to simplify maintenance by making it easier to find the source for the receptacles in a room. This is particularly a problem in hospitals where emergency conditions might require rapid restoration of power.

A.4.3.2.2.2.2 This requirement is usually met by appropriate mounting hardware and not by wire jumpers.

A.4.3.2.2.3 The requirement for grounding interconnection between the normal and essential power systems follows the principle of minimizing possible potential differences between the grounding pins of receptacles in one area by bringing the grounding conductors to a common point.

A.4.3.2.2.4.1 Within the constraints of the equipment provided, consideration should be given to coordinating circuit breakers, fuses, and other overcurrent protective devices so that power interruption in that part of the circuit that precedes the interrupting device closest to a fault is not likely to occur.

A.4.3.2.2.4.2 Listed Class A ground-fault circuit interrupters trip when a fault current to ground is 6 mA or more.

A.4.3.2.2.6 For additional requirements for receptacles in anesthetizing locations, see 13.4.1.2.6.

A.4.3.2.2.6.1 It is best, if possible, to employ only one type of receptacle (standard three-prong type) for as many receptacles being served by the same line voltage to avoid the inability to connect life-support equipment in emergencies. The straight-blade, three-prong receptacle is now permitted in all locations in a hospital. Previously, special receptacles were specified in operating room locations and have caused compatibility problems.

A.4.3.2.2.7.1 Care should be taken in specifying such a quiet grounding system because the grounding impedance is controlled only by the grounding wires and does not benefit from any conduit or building structure in parallel with it.

A.4.3.2.2.7.3 Special grounding methods could be required in patient vicinities immediately adjacent to rooms containing high-power or high-frequency equipment that causes electrical interference with monitors or other electromedical devices. In extreme cases, electromagnetic induction can cause the voltage limits of 4.3.3.1 to be exceeded.

Electromagnetic interference problems can be due to a variety of causes, some simple, others complex. Such problems are best solved one at a time. In some locations, grounding of stretchers, examining tables, or bed frames will be helpful. Where necessary, a patient equipment grounding point should be installed. This can usually be accomplished even after completion of construction by installing a receptacle faceplate fitted with grounding posts. Special grounding wires should not be used unless they are found to be essential for a particular location because they can interfere with patient care procedures or present trip hazards.

Copyright National Fire Protection Association
Provided by IHS under license with NFPA
No reproduction or networking permitted without license from IHS
Not for Resale

A.4.3.2.2.8.1 Moisture can reduce the contact resistance of the body, and electrical insulation is more subject to failure.

A.4.3.2.6 Patient protection is provided primarily by an adequate grounding system. The ungrounded secondary of the isolation transformer reduces the cross-sectional area of grounding conductors necessary to protect the patient against voltage resulting from fault current by reducing the maximum current in case of a single probable fault in the grounding system. The line isolation monitor is used to provide warning when a single fault occurs. Excessive current in the grounding conductors will not result in a hazard to the patient unless a second fault occurs. If the current in the grounding system does not exceed 10 mA, even under fault conditions, the voltage across 9.84 ft (3 m) of No. 12 AWG wire will not exceed 0.2 mV, and the voltage across 9.84 ft (3 m) of No. 18 AWG grounding conductor in a flexible cord will not exceed 0.8 mV. Allowing 0.1 mV across each connector, the voltage between two pieces of patient-connected equipment will not exceed 2 mV.

The reference grounding point is intended to ensure that all electrically conductive surfaces of the building structure, which could receive heavy fault currents from ordinary (grounded) circuits, are grounded in a manner to bypass these heavy currents from the operating room.

A.4.3.2.6.2.1 It is desirable to limit the size of the isolation transformer to 10 kVA or less and to use conductor insulation with low leakage to meet the impedance requirements. Keeping branch circuits short and using insulation with a dielectric constant less than 3.5 and insulation resistance constant greater than 6100 megohmmeters (20,000 megohm-ft) at 60°F (16°C) reduces leakage from line to ground.

To correct milliammeter reading to line impedance use the following equation:

$$\text{Line impedance (in ohms)} = \frac{V \times 100}{I}$$

where:
V = isolated power system voltage
I = milliammeter reading made during impedance test

A.4.3.2.6.3.1 Protection for the patient is provided primarily by a grounding system. The ungrounded secondary of the isolation transformer reduces the maximum current in the grounding system in case of a single fault between either isolated power conductor and ground. The line isolation monitor provides warning when a single fault occurs, or when excessively low impedance to ground develops, which might expose the patient to an unsafe condition should an additional fault occur. Excessive current in the grounding conductors will not result from a first fault. A hazard exists if a second fault occurs before the first fault is cleared.

A.4.3.2.6.3.3 It is desirable to reduce this monitor hazard current provided this reduction results in an increased "not alarm" threshold value for the fault hazard current.

A.4.3.2.6.3.4 The line isolation monitor can be a composite unit, with a sensing section cabled to a separate display panel section, on which the alarm and test functions are located, if the two sections are within the same electric enclosure.

A.4.3.3.1.1 In a conventional grounded power distribution system, one of the line conductors is deliberately grounded, usually at some distribution panel or the service entrance. This grounded conductor is identified as the neutral conductor. The other line conductor (or conductors) is (are) the high side of the line. The loads to be served by this distribution system are fed by the high and neutral conductors.

In addition to the high and neutral conductors, a grounding conductor is provided. One end is connected to the neutral at the point where the neutral is grounded, and the other end leads out to the connected loads. For purposes here, the load connection point will be considered to be a convenience receptacle, with the grounding conductor terminating at the grounding terminal of that receptacle.

This grounding conductor can be a separate wire running from the receptacle back to the remote grounding connection (where it joins the neutral conductor). If that separate conductor does not make any intermediate ground contacts between the receptacle and the remote ground, then the impedance of the connection between the receptacle and the remote ground is primarily the resistance of the grounding conductor itself and is, therefore, predictable.

If, however, the receptacle is also interconnected with the remote ground point by metallic conduit or other metallic building structures, the impedance of the circuit between receptacle and remote ground is not easily predictable, nor is it easy to measure accurately, although one can be sure that the impedance will be less than that of the grounding wire itself because of the additional parallel paths.

Fortunately, as will become apparent in the following paragraphs, the absolute value of the apparent impedance between the grounding contact of an outlet and the remote ground point need not be known or measured with great accuracy.

Ideally, and under no-fault conditions, the grounding system described earlier is supposed to be carrying no current at all. If that were true, then no voltage differences would be found between exposed conductive surfaces of any electrical appliances that were grounded to the grounding contacts of the receptacles that powered them. Similarly, there would be no voltage differences between these appliances and any other exposed metal surface that was also interconnected with the grounding system, provided that no currents were flowing in that interconnection.

Ideal conditions, however, do not prevail, and even when there are no "faults" within an appliance, residual "leakage" current does flow in the grounding conductor of each of the appliances, producing a voltage difference between the chassis of that appliance and the grounding contact of the receptacle that feeds it. Furthermore, this current can produce voltage differences among other appliances plugged into various receptacles on the system.

Fortunately, these leakage currents are small, and for reasonably low grounding-circuit impedances, the resulting voltage differences are entirely negligible.

If, however, a breakdown of insulation between the high side of the line and the chassis of an appliance should occur, the leakage condition becomes a fault condition, the magnitude of which is limited by the nature of the breakdown or, in the case of a dead short circuit in the appliance, the magnitude of the fault current is limited only by the residual resistance of the appliance power cord conductors and that of the power distribution system.

In the event of such a short circuit, the impedance of the grounding circuit, as measured between the grounding contact of the receptacle that feeds the defective appliance and the remote ground point where the neutral and grounding conductors are joined, should be so small that a large enough fault current

--`,,```,,,,````-`-`,,`,,`,`,,`---

Copyright National Fire Protection Association
Provided by IHS under license with NFPA
No reproduction or networking permitted without license from IHS
Not for Resale

will flow to ensure a rapid breaking of the circuit by the overcurrent protective device that serves that receptacle.

For a 20-A branch circuit, a fault current of 40 or more amperes would be required to ensure a rapid opening of the branch-circuit overcurrent-protective device. This corresponds to a circuit impedance of 3 ohms or less, of which the grounding system should contribute 1 ohm or less.

During the time this large fault current flows in the grounding system, the chassis of the defective appliance is raised many volts above other grounded surfaces in the same vicinity. The hazard represented by this condition is minimized by the fact that it exists for only a short time, and unless a patient simultaneously contacts both the defective appliance and some other grounded surface during this short time interval, there is no hazard. Furthermore, the magnitude of an applied voltage required to produce a serious shock hazard increases as its duration decreases, so the rapidity with which the circuit is interrupted helps reduce shock hazard even if such a patient contact should occur.

If, however, the defect in the appliance is not such as to cause an immediate circuit interruption, then the effect of this intermediate level of fault current on the voltages appearing on various exposed conductive surfaces in the patient care vicinity should be considered.

Because all of this fault current flows in the grounding conductor of the defective appliance's power cord, the first effect is to raise the potential of this appliance above that of the receptacle that feeds it by an amount proportional to the power cord grounding conductor resistance. This resistance is required to be less than 0.15 ohm, so fault currents of 20 A or less, which will not trip the branch-circuit overcurrent-protective device, will raise the potential of the defective appliance above the grounding contact of its supply receptacle by only 3 V or less. This value is not hazardous for casual contacts.

The fault current that enters the grounding system at the grounding contact of any receptacle in the patient care vicinity could affect the potential at the grounding contacts of all the other receptacles, and, more importantly, it could produce significant voltage differences between them and other grounded surfaces, such as exposed piping and building structures.

If one grounded point is picked as a reference (a plumbing fixture in or near the patient care vicinity, for example), and then the voltage difference is measured between that reference and the grounding contact of a receptacle, produced by driving some known current into that contact, a direct measure of the effectiveness of the grounding system within the patient care vicinity is obtained. The "figure of merit" can be stated as so many volts per ampere of fault current. The ratio volts per ampere is, of course, impedance; but because the exact path taken by the fault current is not known, and because the way in which the reference point is interconnected with the grounding system is not known, it cannot be stated that this value is the impedance between the receptacle and some specific point, such as the joining of the neutral and grounding conductors. But it can be stated that this measured value of "effective impedance" is indicative of the effectiveness with which the grounding system minimizes voltage differences between supposedly grounded objects in the patient care vicinity that are produced by ground faults in appliances used in that vicinity. This impedance, which characterizes the ability of the grounding system to maintain nearly equipotential conditions within the patient care vicinity, is of prime importance in assessing shock hazard; but this impedance is not necessarily the same as the impedance between receptacle and remote ground point, which controls the magnitude of the short-circuit current involved in tripping the branch-circuit overcurrent-protective device.

Fault currents on the grounding system can also come from neutral-to-ground faults, which permit some current to flow in the neutral and some in the ground. This type of fault is often the cause of interference on EEG and ECG equipment. It is often not recognized easily because, except for 60-Hz interference, the equipment works perfectly properly. It is most easily found by causing a substantial change in the line-to-line load and noting changes in the ground-to-reference voltage.

A.4.3.3.1.1.4 The grounding system (reference ground and conduit) is to be tested as an integral system. Lifting of grounds from receptacles and fixed equipment is not required or recommended for the performance of this test.

A.4.3.3.1.3 Effective grounding to safely handle both fault and leakage currents requires following the requirements of both Chapter 4 of NFPA 99 and Article 250 of NFPA 70, *National Electrical Code*, having good workmanship, and using some techniques that are not in these documents.

The performance of the grounding system is made effective through the existence of the green grounding wire, the metal raceway, and all of the other building metal. Measurements have shown that it is the metal raceway and building steel that provide most of the effective grounding path of less than 10 milliohms at the receptacle, including plug-to-receptacle impedance. The green grounding wire becomes a backup, not a primary grounding path performer.

Good practice calls for each receptacle to have a good jumper grounding connection to the metal raceway at the receptacle location in addition to having the green grounding wire connecting these points to the grounding bus in the distribution panel. Good workmanship includes seeing that these grounding connections are tight at each receptacle and that all metal raceway joints are secure and tight.

The voltage difference measurements listed in 4.3.3.1.3 in connection with power distribution grounding systems should ideally be made with an oscilloscope or spectrum analyzer in order to observe and measure components of leakage current and voltage differences at all frequencies.

For routine testing, such instruments could be inconvenient. An alternative is to use a metering system that weighs the contribution to the meter reading of the various components of the signal being measured in accordance with their probable physiological effect.

A meter specifically designed for this purpose would have an impedance of approximately 1000 ohms, and a frequency characteristic that was flat to 1 kHz, dropped at the rate of 20 decibels per decade to 100 kHz, and then remained flat to 1 MHz or higher. This frequency response characteristic could be achieved by proper design of the internal circuits of the amplifier that probably precedes the indicating instrument or by appropriate choice of a feedback network around the amplifier. These details are, of course, left to the instrument designer.

If a meter specifically designed for these measurements is not available, a general-purpose laboratory millivoltmeter can be adapted for the purpose by adding a frequency response–shaping network ahead of the meter. One such suggested network is shown in Figure A.4.3.3.1.3(a).

The circuit shown in Figure A.4.3.3.1.3(a) is especially applicable to measurements of leakage current, where the current being measured is derived from a circuit whose source

Copyright National Fire Protection Association
Provided by IHS under license with NFPA
No reproduction or networking permitted without license from IHS
Not for Resale

impedance is high compared to 1000 ohms. Under these conditions, the voltage developed across the millivoltmeter will be proportional to the impedance of the network. The network impedance will be 1000 ohms at low frequencies and 10 ohms at high frequencies, and the transition between these two values will occur in the frequency range between 1 kHz and 100 kHz.

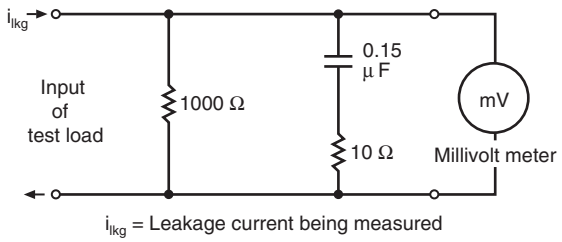

FIGURE A.4.3.3.1.3(a) Circuit Used to Measure Leakage Current with High Source Impedance.

The basic low-frequency sensitivity will be 1 millivolt (mV) of meter reading for each 1 milliampere (mA) of leakage current.

The millivoltmeter's own input impedance needs to be very large compared to 1000 ohms (100 kilohms), and the meter should have a flat frequency response to well beyond 100 kHz. (If the meter impedance is lower than 100 kilohms, then the 1000-ohm resistor can be raised to a higher value, such that the impedance of that resistor in parallel with the meter will still be 1000 ohms.)

The circuit in Figure A.4.3.3.1.3(a) can be used for the voltage difference measurements required in Section 4.5, but, because the source impedance will be very low compared to 1000 ohms, the frequency response of the measurement system will remain flat. If any high-frequency components, produced, for example, by pickup from nearby radio frequency transmitters, appear on the circuit being measured, then they will not be attenuated and the meter reading will be higher than it should be.

For meter readings below any prescribed limits, this possible error is of no consequence. For borderline cases it could be significant. To avoid this uncertainty when making voltage-difference measurements, a slightly more elaborate version of a frequency response–shaping network is given in Figure A.4.3.3.1.3(b).

Here the source being measured is separated from the frequency response–shaping network by the combination of the 900-ohm and 100-ohm resistors. The frequency response characteristic is now independent of the circuit being tested.

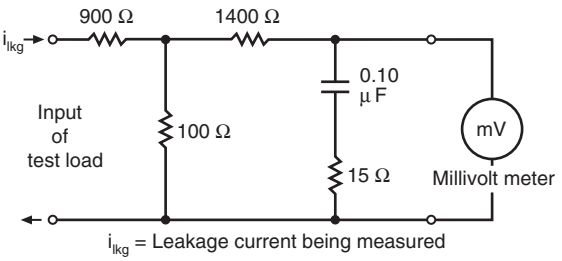

FIGURE A.4.3.3.1.3(b) Circuit Used to Measure Leakage Current with Low Source Impedance.

This independence is achieved, however, at a loss in signal delivered to the millivoltmeter. The basic low-frequency sensitivity of this metering circuit is 1 millivolt of meter reading for 10 μA of leakage current or, on a voltage basis, 1 mV of meter reading for 10 mV at the input terminals of the network.

The millivoltmeter should have an input impedance of 150 kilohms and a frequency response flat to well beyond 100 kHz.

For either of the suggested networks, the resistors and capacitors should be mounted in a metal container close to the millivoltmeter to avoid stray pickup by the leads going to the meter.

A.4.3.3.1.4 It is not the intent that each receptacle be tested. It is intended that compliance be demonstrated through random testing. The 10 percent random testing should include a mixture of both normal and emergency receptacles.

A.4.3.4 Administration is in conjunction with 4.3.4.1, Maintenance and Testing of Electrical System.

A.4.3.4.2.1 Although several approaches to documentation exist in hospitals, the minimum acceptable documentation should convey what was tested, when it was tested, and whether it performed successfully. Adopting a system of exception reporting can be the most efficient form of recordkeeping for routine rechecks of equipment or systems and thereby minimize technicians' time in recording the value of each measurement taken. For example, once a test protocol is established, which simply means testing the equipment or system consistent with Chapter 4, the only item (value) that needs to be recorded is what failure or what deviation from the requirements of the chapter was detected when a corrective action (repair) was undertaken. This approach can serve to eliminate, for example, the need to keep individual room sheets to record measured results on each receptacle or to record measurement values of all types of leakage current tests.

A.4.4.1.1.1 *Connection to Dual Source of Normal Power.* For the greatest assurance of continuity of electrical service, the normal source should consist of two separate full-capacity services, each independent of the other. Such services should be selected and installed with full recognition of local hazards of interruption, such as icing and flooding.

Where more than one full-capacity service is installed, they should be connected in such a manner that one will pick up the load automatically upon loss of the other, and so arranged that the load of the emergency and equipment systems will be transferred to the alternate source (generator set) only when both utility services are deenergized, unless this arrangement is impractical and waived by the authority having jurisdiction. Such services should be interlocked in such a manner as to prevent paralleling of utility services on either primary or secondary voltage levels.

Note that in any installation where it is possible to parallel utility supply circuits, for example, to prevent interruption of service when switching from one utility source to another, it is imperative to consult the power companies affected as to problems of synchronization.

Facilities whose normal source of power is supplied by two or more separate central-station–fed services (dual sources of normal power) experience greater reliability than those with only a single feed.

Installation of Generator Sets. For additional material on diesel engines, see *Diesel Engines for Use with Generators to Supply Emergency and Short Term Electric Power*, National Research Council Publication 1132 *(see Annex G).*

Copyright National Fire Protection Association
Provided by IHS under license with NFPA
No reproduction or networking permitted without license from IHS
Not for Resale

A.4.4.1.1.1.2(5) Careful consideration should be given to the location of the spaces housing the components of the essential electrical system to minimize interruptions caused by natural forces common to the area (e.g., storms, floods, or earthquakes, or hazards created by adjoining structures or activities). Consideration should also be given to the possible interruption of normal electrical services resulting from similar causes as well as possible disruption of normal electrical service due to internal wiring and equipment failures.

Consideration should be given to the physical separation of the main feeders of the essential electrical system from the normal wiring of the facility to prevent possible simultaneous destruction as a result of a local catastrophe.

In selecting electrical distribution arrangements and components for the essential electrical system, high priority should be given to achieving maximum continuity of the electrical supply to the load. Higher consideration should be given to achieving maximum reliability of the alternate power source and its feeders rather than protection of such equipment, provided the protection is not required to prevent a greater threat to human life such as fire, explosion, electrocution, and so forth, than would be caused by the lack of essential electrical supply.

A.4.4.1.1.7.3 The intent of this subparagraph is as follows:

(1) Contiguous or same site nonhospital buildings can be served by the generating equipment. However, such loads should not compromise the integrity of the system serving the hospital. Thus, any such contiguous or same site nonhospital buildings can be served by the generating equipment only if the transfer means operates in accordance with this subparagraph.
(2) Within a hospital building, 4.4.2.2.2.3(9) allows "additional" loads on the critical branch and 4.4.2.2.3.5(9) allows "other equipment" on the equipment system in order to provide limited flexibility to a facility to add one or two loads not otherwise listed in 4.4.2.2.2.3(1) through 4.4.2.2.2.3(8), or 4.4.2.2.3.4, or 4.4.2.2.3.5(1) through 4.4.2.2.3.5(9) to a critical branch panel or an equipment system panel. This allowance is to prevent the need for an additional panel to serve a small number of selected circuits in a particular area. These sections are not intended to allow large blocks of loads not listed in these sections to be on the critical branch or equipment system. The intent of the division of the essential system loads into systems and branches is to ensure maximum reliability of service to loads considered essential. Every additional load placed onto a system somewhat increases the probability of a failure on the system that threatens the integrity of service to the balance of loads served by the system. Therefore, while "additional" loads and "other equipment" can be placed onto the critical branch and equipment system in very limited situations, where a facility wants to put large blocks of loads not listed in 4.4.2.2.2.3(1) through 4.4.2.2.2.3(8), or 4.4.2.2.3.4, or 4.4.2.2.3.5(1) through 4.4.2.2.3.5(9) onto the generating equipment, the facility can do so, but only by designating these large blocks of loads as "optional loads" and by complying with 4.4.1.1.7.3.

A.4.4.1.1.9 It is the intent of this subparagraph to mandate generator sizing based upon actual demand likely to be produced by the connected load of the essential electrical system(s) at any one time. It is not the intent that generator sizing be based upon connected load or feeder calculation procedures described in NFPA 70, *National Electrical Code*. Demand calculations should be based upon prudent demand factors and historical data.

A.4.4.1.1.12.1 During operation, EPS and related equipment reject considerable heat that needs to be removed by proper ventilation or air-cooling. In some cases, outdoor installations rely on natural air circulation, but enclosed installations need properly sized, properly positioned ventilation facilities, to prevent recirculation of cooling air. The optimum position of air-supply louvers and radiator air discharge is on opposite walls, both to the outdoors. [**110:** A.7.7.1]

A.4.4.1.1.17.1 As a supplement to hard-wired alarm annunciations, it is permissible to have Level 1 and Level 2 EPS and ATS functions monitored offsite. Monitoring stations can include pagers, cell phones, and internet-connected devices.

A.4.4.2 It should be emphasized that the type of system selected and its area and type of coverage should be appropriate to the medical procedures being performed in the facility. For example, a battery-operated emergency light that switches "on" when normal power is interrupted and an alternate source of power for suction equipment, along with the immediate availability of some portable hand-held lighting, would be advisable where oral and maxillofacial surgery (e.g., extraction of impacted teeth) is performed. On the other hand, in dental offices where simple extraction, restorative, prosthetic, or hygienic procedures are performed, only remote corridor lighting for purposes of egress would be sufficient. Emergency power for equipment would not be necessary. As with oral surgery locations, a surgical clinic requiring use of life support or emergency devices such as suction machines, ventilators, cauterizers, or defibrillators would require both emergency light and power.

A.4.4.2.1.4.1(A) Where special loads require more rapid detection of power loss, underfrequency monitoring also might be provided. Upon frequency decay below the lower limit necessary for proper operation of the loads, the transfer switch should automatically initiate transfer to the alternate source. *(See A.6.2.15 of NFPA 110.)* [**110:** A.6.2.2.1]

A.4.4.2.1.4.1(A)(2) See 6.2.5 and 6.2.7 of NFPA 110. [**110:** A.6.2.2.1(2)]

A.4.4.2.1.4.3 Authorized personnel should be available and familiar with manual operation of the transfer switch and should be capable of determining the adequacy of the alternate source of power prior to manual transfer. [**110:** A.6.2.4]

A.4.4.2.1.4.4 For most applications, a nominal delay of 1 second is adequate. The time delay should be short enough so that the generator can start and be on the line within the time specified for the type classification. [**110:** A.6.2.5]

A.4.4.2.1.4.7 It is recommended that the timer for delay on retransfer to the primary source be set for 30 minutes. The 30-minute recommendation is to establish a "normalized" engine temperature, when it is beneficial for the engine. NFPA 70, *National Electrical Code*, establishes a minimum time requirement of 15 minutes. [**110:** A.6.2.8]

A.4.4.2.1.4.12 For maintenance purposes, consideration should be given to a transfer switch counter. [**110:** A.6.2.13]

A.4.4.2.1.4.14 Automatic transfer switches (ATS) can be provided with accessory controls that provide a signal to operate remote motor controls that disconnect motors prior to transfer, and to reconnect them after transfer when the residual voltage has been substantially reduced. Another method is to provide inphase monitors within the ATS in order to prevent retransfer to the primary source until both sources are nearly

Copyright National Fire Protection Association
Provided by IHS under license with NFPA
No reproduction or networking permitted without license from IHS
Not for Resale

synchronized. A third method is to use a programmed neutral position transfer switch. See Section 230.95(B) of NFPA 70, *National Electrical Code*. [**110:** A.6.2.15]

A.4.4.2.1.4.15 Standards for nonautomatic transfer switches are similar to those for automatic transfer switches, as defined in 3.3.7.1 and 3.3.7.3 of NFPA 110, *Standard for Emergency and Standby Power Systems*, with the omission of automatic controls. [**110:** A.6.2.16]

A.4.4.2.1.7.3 Consideration should be given to the effect that load interruption could have on the load during maintenance and service of the transfer switch.

A.4.4.2.2.1 Type 1 essential electrical systems are comprised of two separate systems capable of supplying a limited amount of lighting and power service that is considered essential for life safety and effective facility operation during the time the normal electrical service is interrupted for any reason. These two systems are the emergency system and the equipment system.

A.4.4.2.2.2.2(4) Departmental installations such as digital dialing systems used for intradepartmental communications could have impaired use during a failure of electrical service to the area. In the event of such failure, those systems that have lighted selector buttons in the base of the telephone instrument or in the desk units known as "director sets" will be out of service to the extent that the lights will not function and that the buzzer used to indicate incoming calls will be silenced. The lack of electrical energy will not prevent the use of telephones for outgoing calls, but incoming calls will not be signaled, nor will intercommunicating calls be signaled. This communication failure should be taken into consideration in planning essential electrical systems.

A.4.4.2.2.2.3 It is recommended that facility authorities give consideration to providing and properly maintaining automatic battery-powered lighting units or systems to provide minimal task illumination in operating rooms, delivery rooms, and certain special-procedure radiology rooms where the loss of lighting due to failure of the essential electrical system could cause severe and immediate danger to a patient undergoing surgery or an invasive radiographic procedure.

A.4.4.2.2.2.3(7) Departmental installations such as digital dialing systems used for intradepartmental communications could have impaired use during a failure of electrical service to the area. In the event of such failure, those systems that have lighted selector buttons in the base of the telephone instrument or in the desk units known as "director sets" will be out of service to the extent that the lights will not function and that the buzzer used to indicate incoming calls will be silenced. The lack of electrical energy will not prevent the use of telephones for outgoing calls, but incoming calls will not be signaled, nor will intercommunicating calls be signaled. This communication failure should be taken into consideration in planning essential electrical systems.

A.4.4.2.2.3.4 The equipment in 4.4.2.2.3.4(1) through 4.4.2.2.3.4(3) can be arranged for sequential delayed-automatic connection to the alternate power source to prevent overloading the generator where engineering studies indicate that it is necessary.

A.4.4.2.2.3.5 For elevator cab lighting control, and signal system requirements, see 4.4.2.2.2.2(6).

In instances where interruption of normal power would result in other elevators stopping between floors, throw-over facilities shall be provided to allow the temporary operation of any elevator for the release of patients or other persons who are confined between floors.

A.4.4.2.2.3.5(2) The outside design temperature is based on the 97½ percent design value as shown in Chapter 24 of the ASHRAE *Handbook of Fundamentals*.

A.4.4.2.2.3.5(9) Consideration should be given to selected equipment in kitchens, laundries, and radiology rooms and to selected central refrigeration.

It is desirable that, where heavy interruption currents can be anticipated, the transfer load be reduced by the use of multiple transfer devices. Elevator feeders, for instance, might be less hazardous to electrical continuity if they are fed through an individual transfer device.

A.4.4.2.2.4.1 See NFPA 70, *National Electrical Code*, for installation requirements.

A.4.4.2.2.4.2(B) If color is used to identify these receptacles, the same color should be used throughout the facility.

A.4.4.4.1.1.2(A) When indications such as the issuance of storm warnings indicate that power outages might be likely, good practice recommends the warming up of generator sets by a regular exercise period. Operation of generator sets for short intervals should be avoided, particularly with compression ignition engines, since it is harmful to the engines.

Records of changes to the essential electrical system should be maintained so that the actual demand likely to be produced by the connected load will be within the available capacity.

A.4.4.4.1.2.1 Main and feeder circuit breakers should be periodically tested under simulated overload trip conditions to ensure reliability *(see C.4.2)*.

A.4.5.2.2.1 Type 2 essential electrical systems are comprised of two separate systems capable of supplying a limited amount of lighting and power service that is considered essential for the protection of life and safety and effective operation of the institution during the time normal electrical service is interrupted for any reason. These two separate systems are the emergency system and the critical system.

The number of transfer switches to be used shall be based upon reliability, design, and load considerations. Each branch of the emergency system and each critical system shall have one or more transfer switches. One transfer switch shall be permitted to serve one or more branches or systems in a facility with a maximum demand on the essential electrical system of 150 kVA (120 kW).

A.4.5.2.2.2(4) Departmental installations such as digital dialing systems used for intradepartmental communications could have impaired use during a failure of electrical service to the area. In the event of such failure, those systems that have lighted selector buttons in the base of the telephone instrument or in the desk units known as "director sets" will be out of service to the extent that the lights will not function and that the buzzer used to indicate incoming calls will be silenced. The lack of electrical energy will not prevent the use of telephones for outgoing calls, but incoming calls will not be signaled, nor will intercommunicating calls be signaled. This communication failure should be taken into consideration in planning essential electrical systems.

A.4.5.2.2.3.4 Other selected equipment can be served by the critical system.

Copyright National Fire Protection Association
Provided by IHS under license with NFPA
No reproduction or networking permitted without license from IHS
Not for Resale

Note that consideration should be given to selected equipment in kitchens and laundries, and to selected central refrigeration.

It is desirable that, where heavy interruption currents can be anticipated, the transfer load be reduced by the use of multiple transfer devices. Elevator feeders, for instance, might be less hazardous to electrical continuity if they are fed through an individual transfer device.

A.4.5.2.2.3.4(A)(1) The outside design temperature is based on the 97½ percent design value as shown in Chapter 24 of the ASHRAE *Handbook of Fundamentals*.

A.4.5.2.2.3.4(B) For elevator cab lighting, control, and signal system requirements, see 4.5.2.2.2(6).

A.4.5.2.2.4.1 See NFPA 70, *National Electrical Code*, for installation requirements.

A.4.5.2.2.4.2 If color is used to identify these receptacles, the same color should be used throughout the facility.

A.4.6.2.2.1 Type 3 essential electrical systems are comprised of a system capable of supplying a limited amount of lighting and power service that is considered essential for life safety and orderly cessation of procedure during the time normal electrical service is interrupted for any reason.

A.4.6.2.2.3.2 If color is used to identify these receptacles, the same color should be used throughout the facility.

A.5.1.1 Section 5.1 covers requirements for Level 1 piped gas and vacuum systems; Section 5.2 covers Level 2 piped gas and vacuum systems; Section 5.3 covers Level 3 piped gas and vacuum systems. Laboratory systems are no longer covered by Chapter 5 (2002 edition).

A.5.1.1.2 These requirements do not restrict the distribution of other inert gases through piping systems.

A.5.1.3 See Figure A.5.1.3. Level 1 source drawings in this annex are representational, demonstrating a possible arrangement of components required by the text. The diagrams are not intended to imply method, materials of construction, or more than one of many possible and equally compliant arrangements. Alternative arrangements are permitted if they meet the intent of the text. Listed paragraphs may not be the only paragraphs that apply.

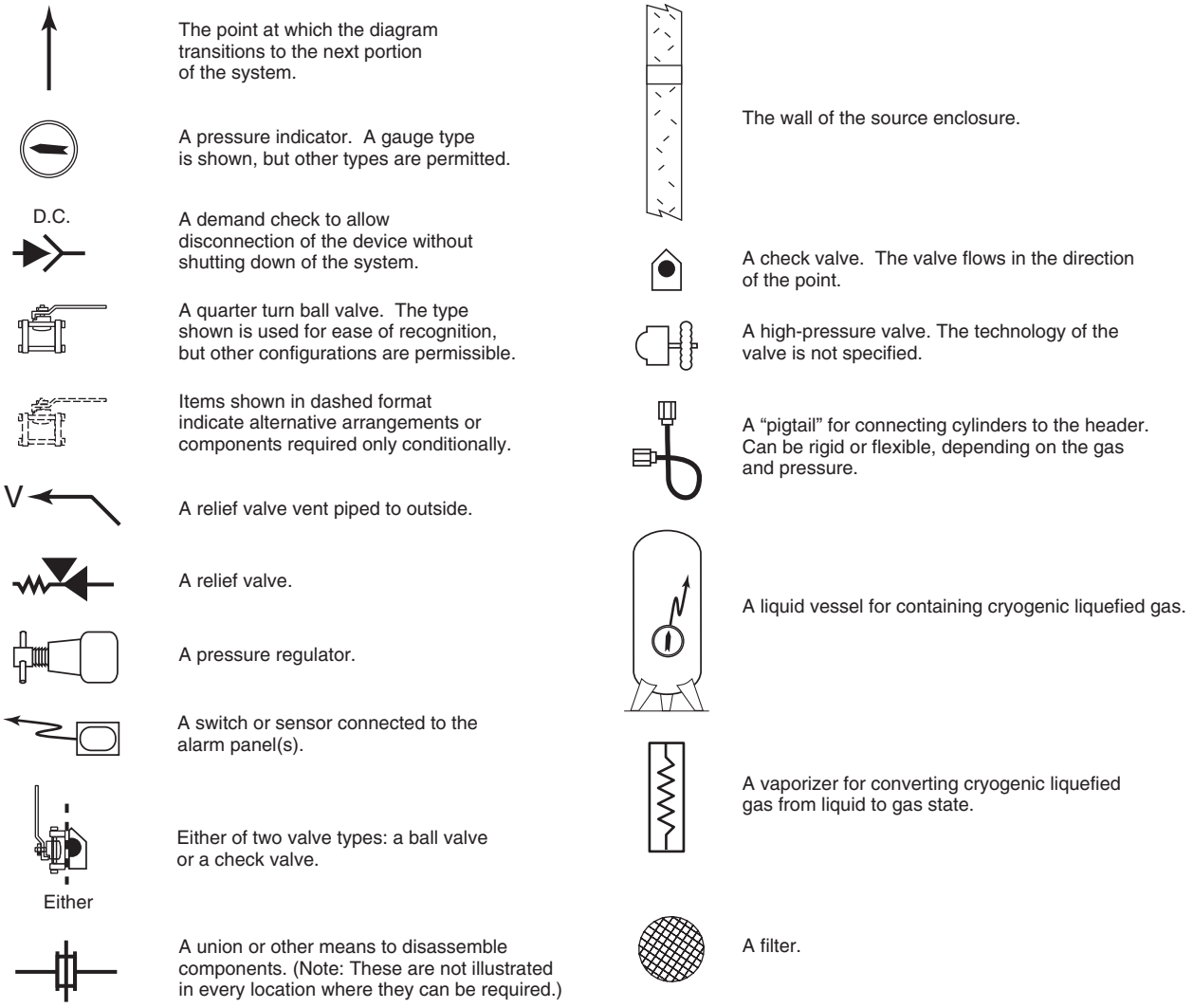

FIGURE A.5.1.3 Legend for Typical Level 1 Source Drawings.

Copyright National Fire Protection Association
Provided by IHS under license with NFPA
No reproduction or networking permitted without license from IHS
Not for Resale

A.5.1.3.1.1 Regulations of the U.S. Department of Transportation (formerly U.S. Interstate Commerce Commission) outline specifications for transportation of explosives and dangerous articles (49 CFR 171–190). In Canada, the regulations of the Canadian Transport Commission, Union Station, Ottawa, Ontario, apply.

A.5.1.3.3 The bulk supply system should be installed on a site that has been prepared to meet the requirements of NFPA 50, *Standard for Bulk Oxygen Systems at Consumer Sites*, or CGA G-8.1, *Standard for Nitrous Oxide Systems at Consumer Sites*. Storage unit(s), reserve, pressure regulation, and signal actuating switch(es) are components of the supply system. Shutoff valves, piping from the site, and electric wiring from a signal switch(es) to the master signal panels are components of the piping system.

The bulk supply system is normally installed on the site by the owner of this equipment. It is the responsibility of the owner or the organization responsible for the operation and maintenance of the bulk supply system to ensure that all components of the supply system — main supply, reserve supply, supply system signal actuating switch(es), and delivery pressure regulation equipment — function properly before the system is put in service.

A.5.1.3.3.2 Electric wiring and equipment in storage rooms for oxygen and nitrous oxide are not required to be explosionproof.

A.5.1.3.4 See Figure A.5.1.3.4. A four-valve bypass arrangement is illustrated. Three-way valves are permitted in lieu of the four valves shown.

A.5.1.3.4.2 Prohibited uses of medical gases include fueling torches, blowing down or drying any equipment such as lab equipment, endoscopy or other scopes, or any other purposes. Also prohibited is using the oxygen or medical air to raise, lower, or otherwise operate booms or other devices in operating rooms (ORs) or other areas.

A.5.1.3.4.4 Components include but are not limited to containers, valves, valve seats, lubricants, fittings, gaskets, and interconnecting equipment including hose. Easily ignitable materials should be avoided.

Compatibility involves both combustibility and ease of ignition. Materials that burn in air will burn violently in pure oxygen at normal pressure and explosively in pressurized oxygen. Also, many materials that do not burn in air will do so in pure oxygen, particularly under pressure. Metals for containers and piping have to be carefully selected, depending on service conditions. The various steels are acceptable for many applications, but some service conditions can call for other materials (usually copper or its alloys) because of their greater resistance to ignition and lower rate of combustion.

Similarly, materials that can be ignited in air have lower ignition energies in oxygen. Many such materials can be ignited by friction at a valve seat or stem packing or by adiabatic compression produced when oxygen at high pressure is rapidly introduced into a system initially at low pressure.

A.5.1.3.4.9 See Figure A.5.1.3.4.9(a) and Figure A.5.1.3.4.9(b). Connection to the gas outlet connection is illustrated. If the liquid outlet connection were used, an external vaporizer could be required.

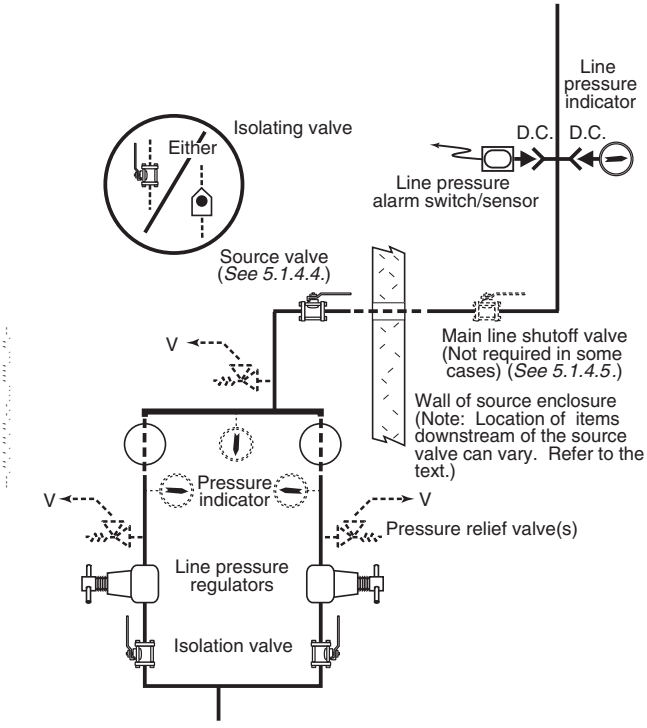

FIGURE A.5.1.3.4 Typical Arrangement for Line Controls at Pressure Sources.

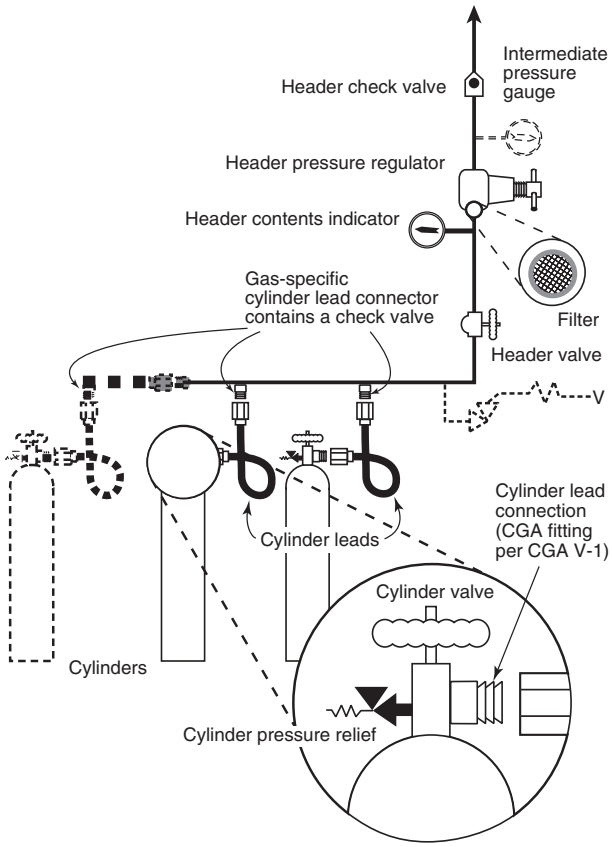

FIGURE A.5.1.3.4.9(a) Header for Gas in Cylinders.

Copyright National Fire Protection Association
Provided by IHS under license with NFPA
No reproduction or networking permitted without license from IHS
Not for Resale

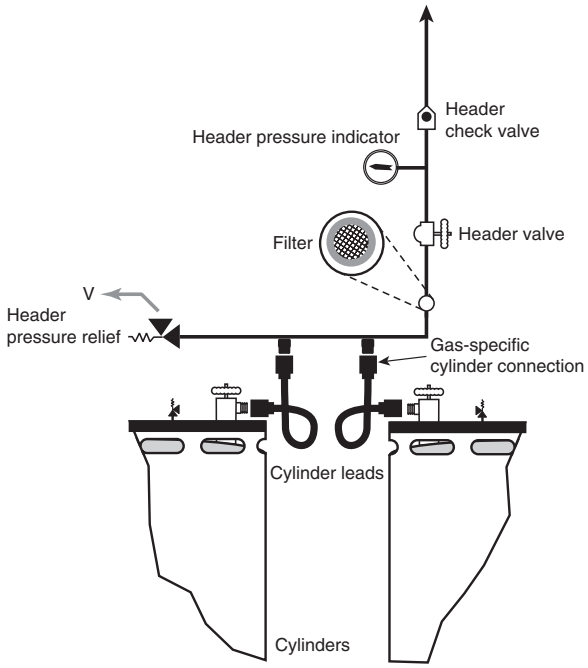

FIGURE A.5.1.3.4.9(b) Header for Cryogenic Gas in Containers.

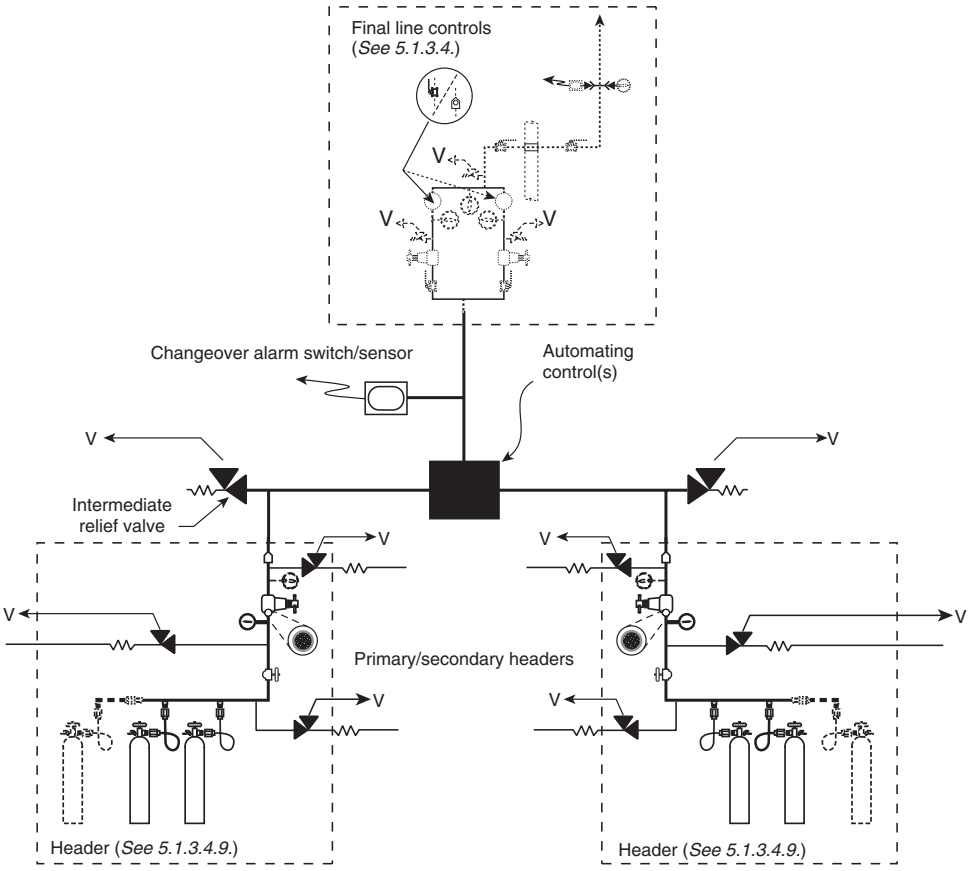

FIGURE A.5.1.3.4.10 Manifold for Gas Cylinders.

A.5.1.3.4.9(1) The appropriate number of cylinders should be determined after consideration of delivery schedules, proximity of the facility to alternate supplies, and the emergency plan.

A.5.1.3.4.10 See Figure A.5.1.3.4.10.

A.5.1.3.4.12 See Figure A.5.1.3.4.12.

A.5.1.3.4.13 For bulk oxygen systems, see NFPA 50, *Standard for Bulk Oxygen Systems at Consumer Sites*. See Figure A.5.1.3.4.13. Two possible choices of reserves are illustrated. Both are not required.

A.5.1.3.4.14 See Figure A.5.1.3.4.14.

If the relief valve on the emergency oxygen connection is moved to downstream from the check valve in the emergency oxygen line, connect it to the system with a demand check fitting.

Copyright National Fire Protection Association
Provided by IHS under license with NFPA
No reproduction or networking permitted without license from IHS
Not for Resale

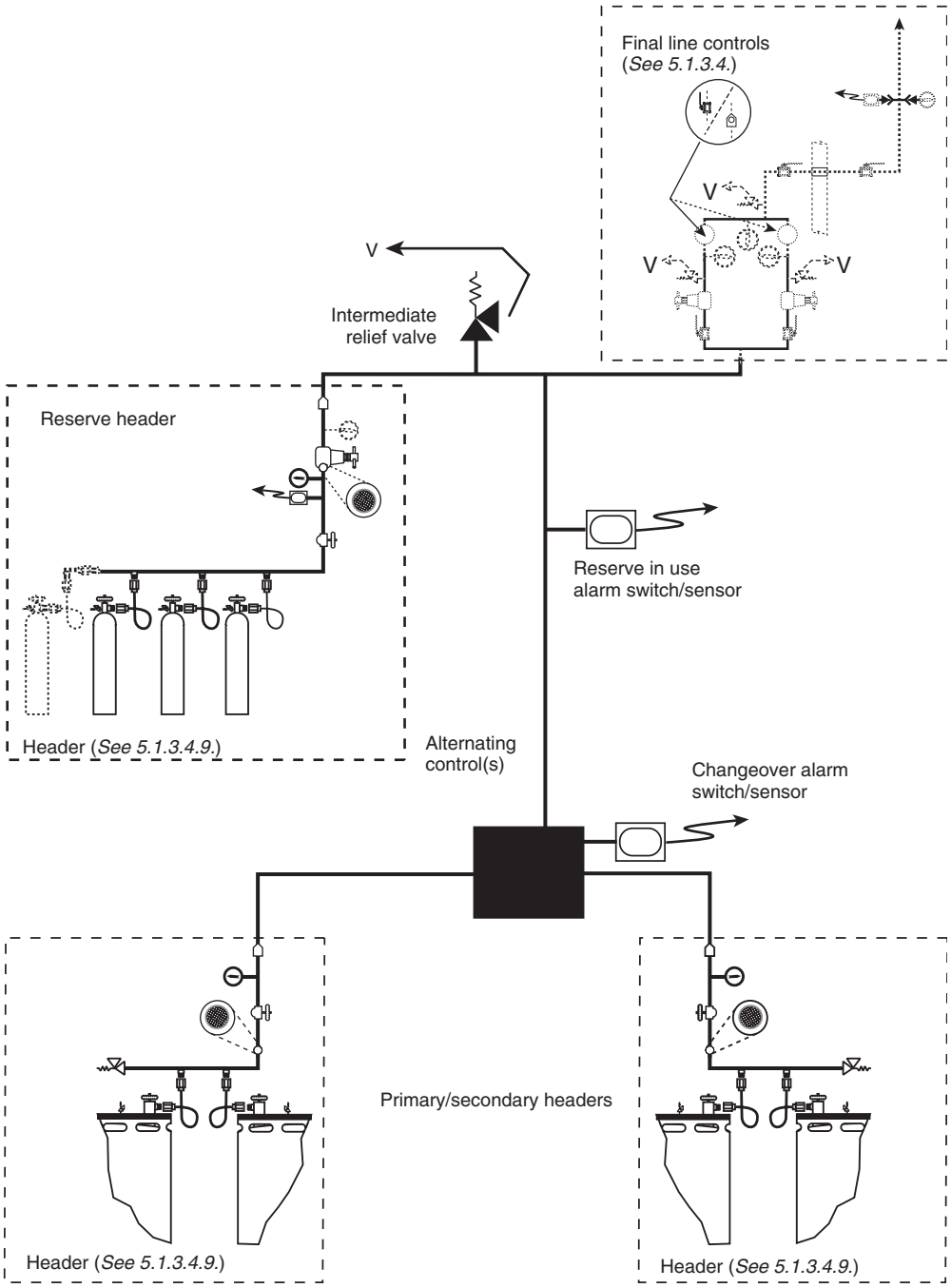

FIGURE A.5.1.3.4.12 Typical Source of Supply for Cryogenic Gas in Containers.

Copyright National Fire Protection Association
Provided by IHS under license with NFPA
No reproduction or networking permitted without license from IHS
Not for Resale

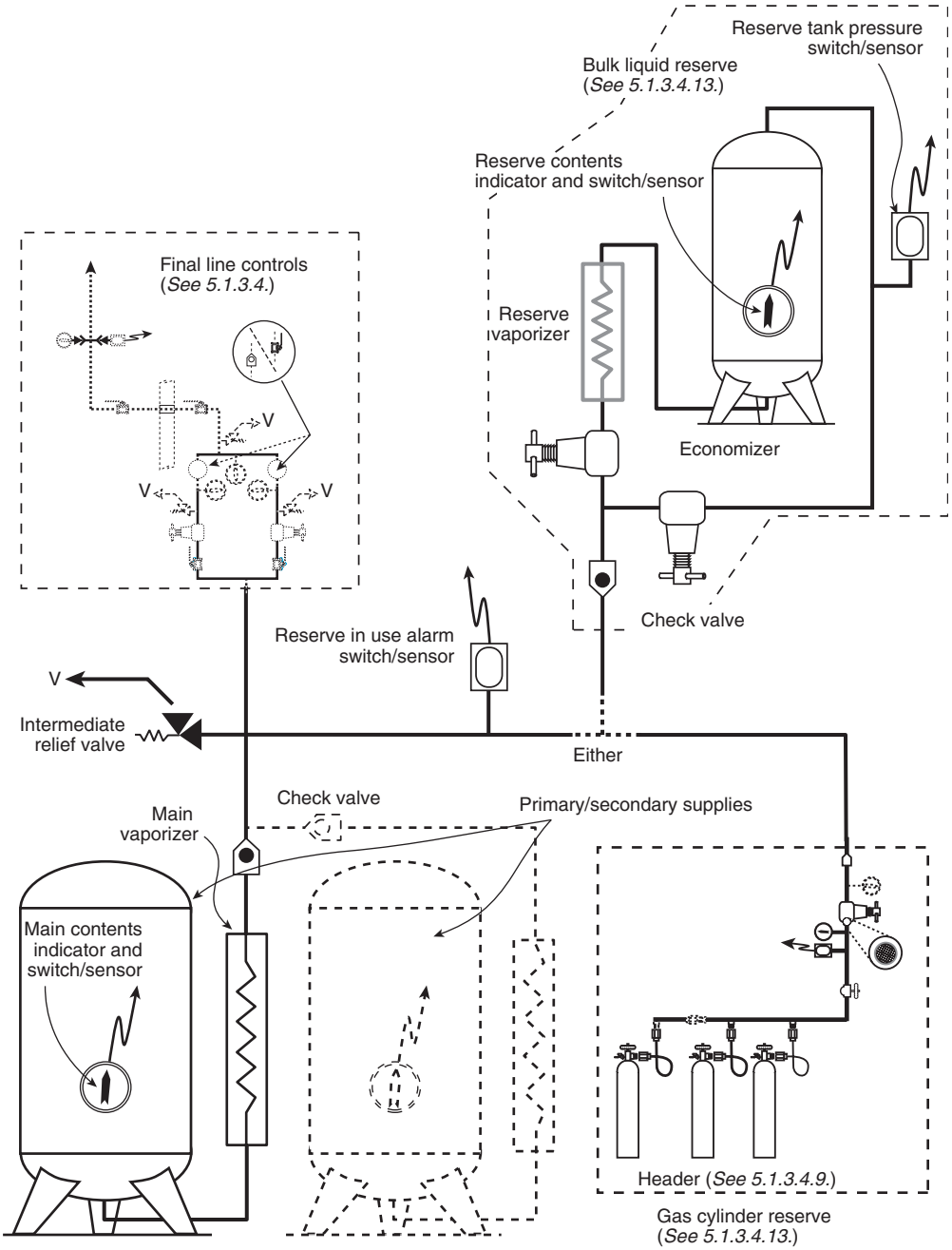

FIGURE A.5.1.3.4.13 Typical Source of Supply for Cryogenic Gas in Bulk.

Copyright National Fire Protection Association
Provided by IHS under license with NFPA
No reproduction or networking permitted without license from IHS
Not for Resale

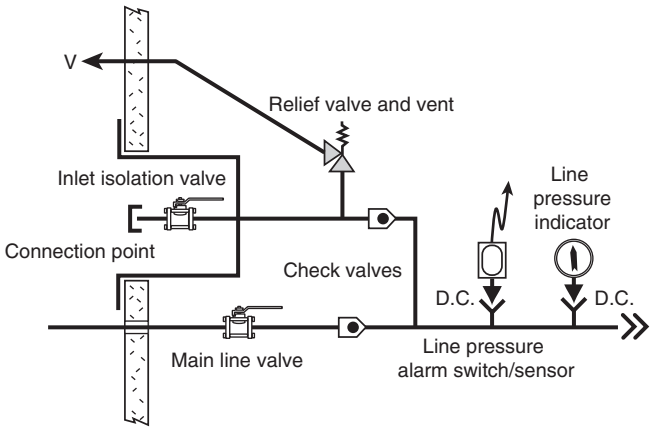

FIGURE A.5.1.3.4.14 Emergency Oxygen Supply Connection.

A.5.1.3.5 Air supplied from on-site compressor and associated air treatment systems (as opposed to medical air USP supplied in cylinders) that complies with the specified limits is considered medical air. Hydrocarbon carryover from the compressor into the pipeline distribution system could be detrimental to the safety of the end user and to the integrity of the piping system. Mixing of air and oxygen is a common clinical practice, and the hazards of fire are increased if the air is contaminated. Compliance with these limits is thus considered important to fire and patient safety. The quality of local ambient air should be determined prior to its selection for compressors and air treatment equipment. See Figure A.5.1.3.5.

A.5.1.3.5.1 Supply systems for medical air using compressors draw air of the best available quality from a source of clean local ambient air; add no contaminants in the form of particulate matter, odor, or other gases; dry, filter, regulate, and supply that air only via the medical air piping distribution system for use exclusively in the application of human respiration.

The utilization of an air treatment system is the joint responsibility of the system designer, hospital clinical and engineering staffs, and the authority having jurisdiction. Different types of compressors have characteristics that affect the selection of the type of air treatment system. Some air treatment systems impose an additional load upon the compressors that has to be accounted for in the sizing of the system (usable capacity). The compressor duty cycle has to be chosen in accordance with the manufacturer's recommendation.

The type of air compressor and air condition at the intake will govern the type of filter provided for the air compressor supply system. All filters should be examined quarterly for the presence of liquids or excessive particulates and replaced according to the manufacturer's instructions.

One procedure for reaching a decision on the quality of the medical air is the following:

(1) Test at the intake and at the sample connection valve.
(2) If the two purities agree within the limits of accuracy of the test, the compressor system can be accepted.
(3) If the air is found to exceed the values for medical compressed air as defined in 5.1.3.5.1, the facility can elect to install purification apparatus for the contaminants in question.

A.5.1.3.5.2 It is the intent that the medical air piping distribution system support only the intended need for breathable air for such items as intermittent positive pressure breathing (IPPB) and long-term respiratory assistance needs, anesthesia machines, and so forth. The system is not intended to be used to provide engineering, maintenance, and equipment needs for general hospital support use. It is the intent that the life safety nature of the medical air be protected by a system dedicated solely for its specific use.

As a compressed air supply source, a medical air compressor should not be used to supply air for other purposes because such use could increase service interruptions, reduce service life, and introduce additional opportunities for contamination.

A.5.1.3.5.3 See Figure A.5.1.3.5.

A.5.1.3.5.4.1 Examples of 5.1.3.5.4.1(1) are liquid ring and permanently sealed bearing compressors.

An example of 5.1.3.5.4.1(2) is an extended head reciprocating compressor with an atmospheric vent between the compression chamber and the crankcase.

An example of 5.1.3.5.4.1(3) is a rotating element compressor with the compression chamber being nonlubricated and separated from the lubricated gears by at least one shaft seal with an atmospheric vent on both sides. The vent on the lubricated side is provided with a gravity drain to atmosphere.

A.5.1.3.5.10 Other functions can be added at the request of the facility, such as low water pressure, and so forth.

A.5.1.3.5.11.4 A typical example of valving the receiver is shown in Figure A.5.1.3.5.11.4.

A.5.1.3.5.11.6 The two configurations are equally acceptable. The components can be arranged in either of the arrangements shown in Figure A.5.1.3.5.11.6.

A.5.1.3.6 See Figure A.5.1.3.6.

A.5.1.3.7 A functioning WAGD system will permit the facility to comply with occupational safety requirements by preventing the accumulation of waste anesthetic gases in the work environment.

WAGD using an HVAC (i.e., heating, ventilation, and air conditioning) system are not within the scope of Chapter 5.

Flammable and nonflammable gases are known to be incompatible with some seals and piping used in medical–surgical vacuum systems. If waste anesthetic gas disposal is to be included as part of the medical–surgical vacuum system, it should be recognized that this activity might cause deterioration of the vacuum system. The station inlet performance tests outlined in 5.1.12.3.10 are extremely important in maintaining the integrity of the medical–surgical vacuum system, and they should be made at more frequent intervals if waste anesthetic gas disposal is included in the vacuum system.

A.5.1.3.7.1 Interfaces are provided with overpressure, underpressure, overflow, and underflow compensation to ensure the breathing circuit is isolated from the WAGD system.

A.5.1.3.8 See Figure A.5.1.3.8.

A.5.1.3.8.5 Drawing intake air from outside in compliance with 5.1.3.5.13 is recommended.

Copyright National Fire Protection Association
Provided by IHS under license with NFPA
No reproduction or networking permitted without license from IHS
Not for Resale

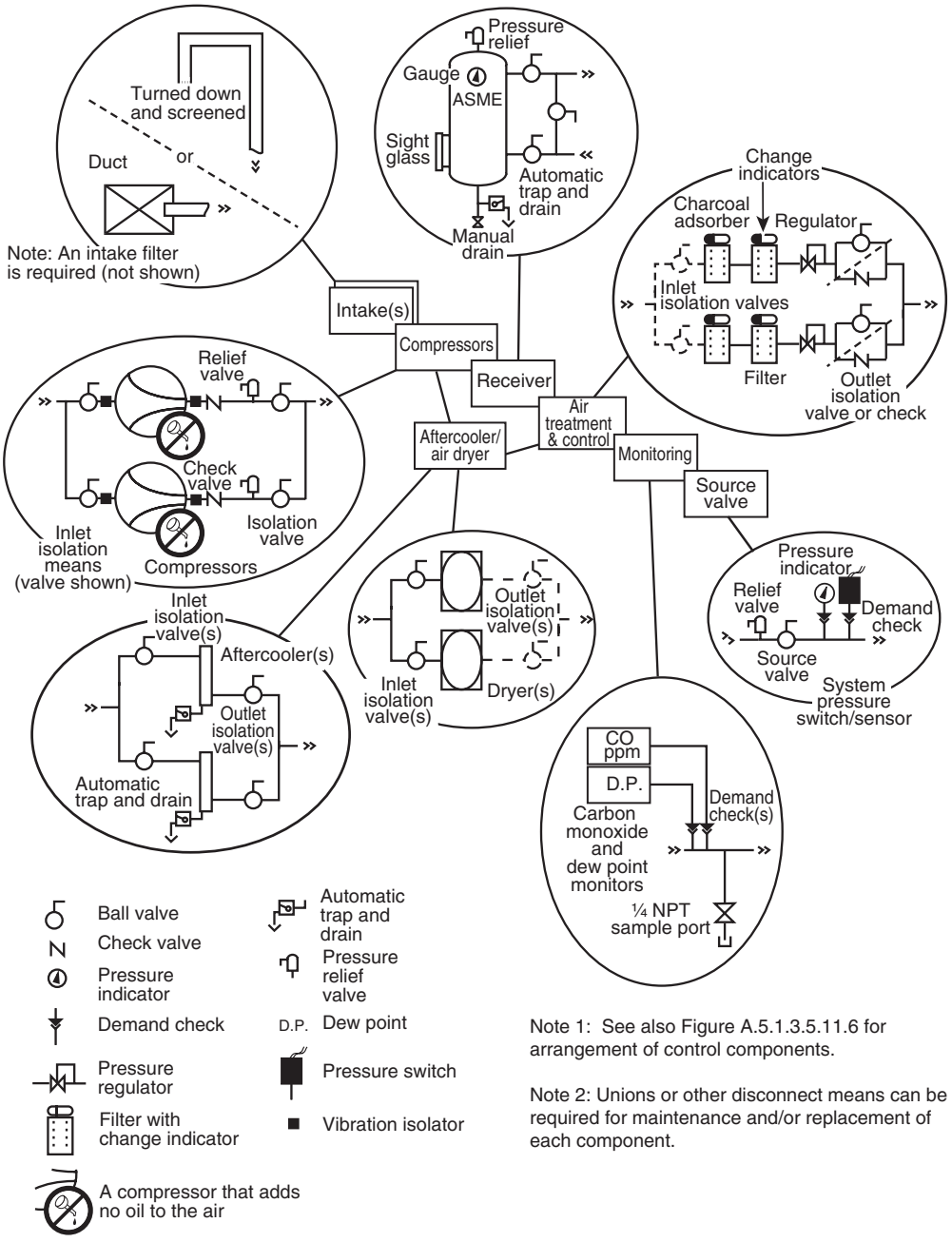

FIGURE A.5.1.3.5 Elements of a Typical Duplex Medical Air Compressor Source System (Level 1 Gas Systems).

A.5.1.4 See Figure A.5.1.4.

Area alarms are required in critical care locations (examples include intensive care units, coronary care units, angiography laboratories, cardiac catherization laboratories, postanesthesia recovery rooms, and emergency rooms) and anesthetizing locations (examples include operating rooms and delivery rooms). Refer to definitions for these areas.

A.5.1.4.5 The presence of a main line shutoff valve is optional where the source valve can equally or more effectively perform the same function. An example is a case where the source is within the building or just on the outside of the building and therefore there would be no great distance separating the two valves. A source that was physically separate from the building would require both valves to assure the intervening piping could be controlled.

A.5.1.5 Station outlets/inlets should be located at an appropriate height above the floor to prevent physical damage to equipment attached to the outlet.

A.5.1.6 Manufactured assembly examples include headwalls, columns, ceiling columns, ceiling hung pendants, movable track systems, and so forth. See Figure A.5.1.6.

Copyright National Fire Protection Association
Provided by IHS under license with NFPA
No reproduction or networking permitted without license from IHS
Not for Resale

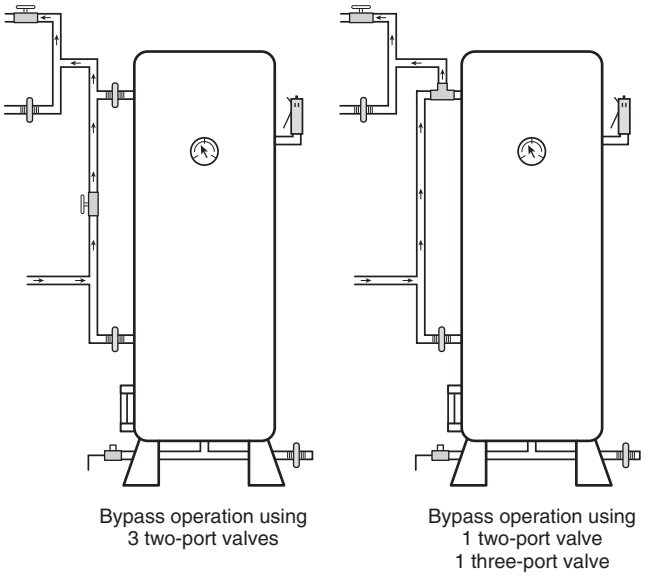

FIGURE A.5.1.3.5.11.4 Receiver Valving Arrangement.

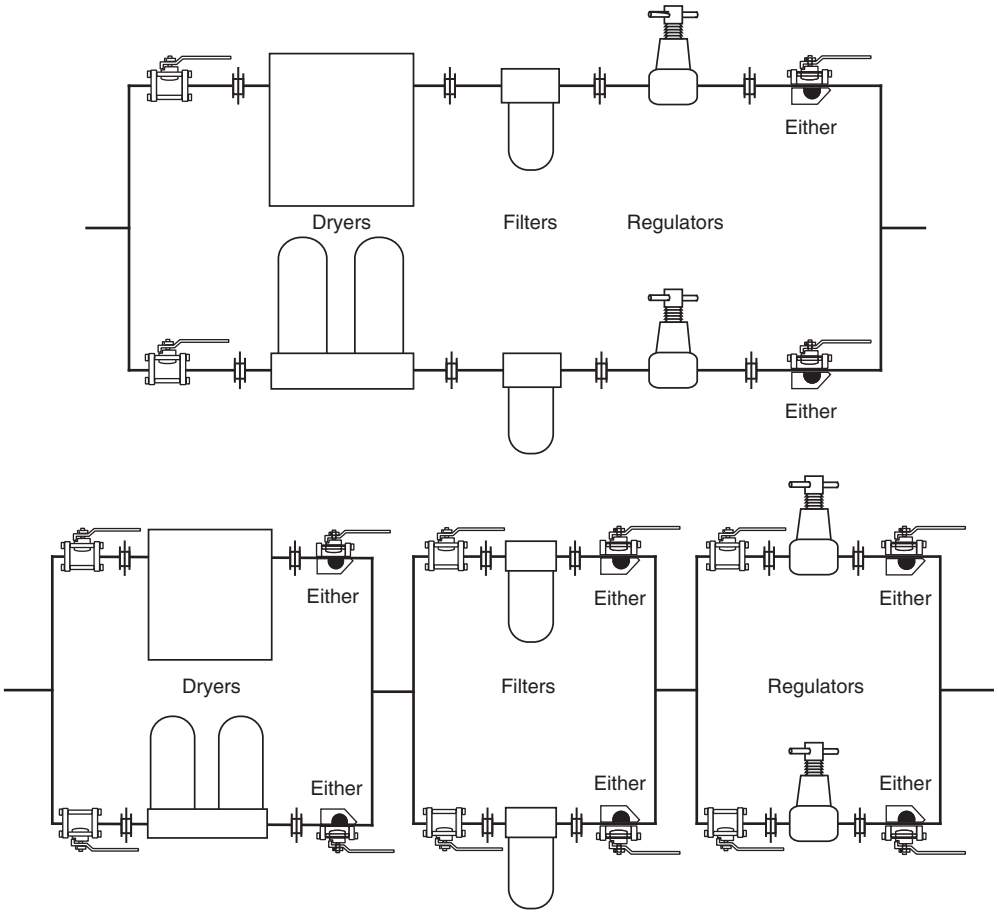

FIGURE A.5.1.3.5.11.6 Alternate Valving Sequences for Line Controls in Medical Air.

Copyright National Fire Protection Association
Provided by IHS under license with NFPA
No reproduction or networking permitted without license from IHS
Not for Resale

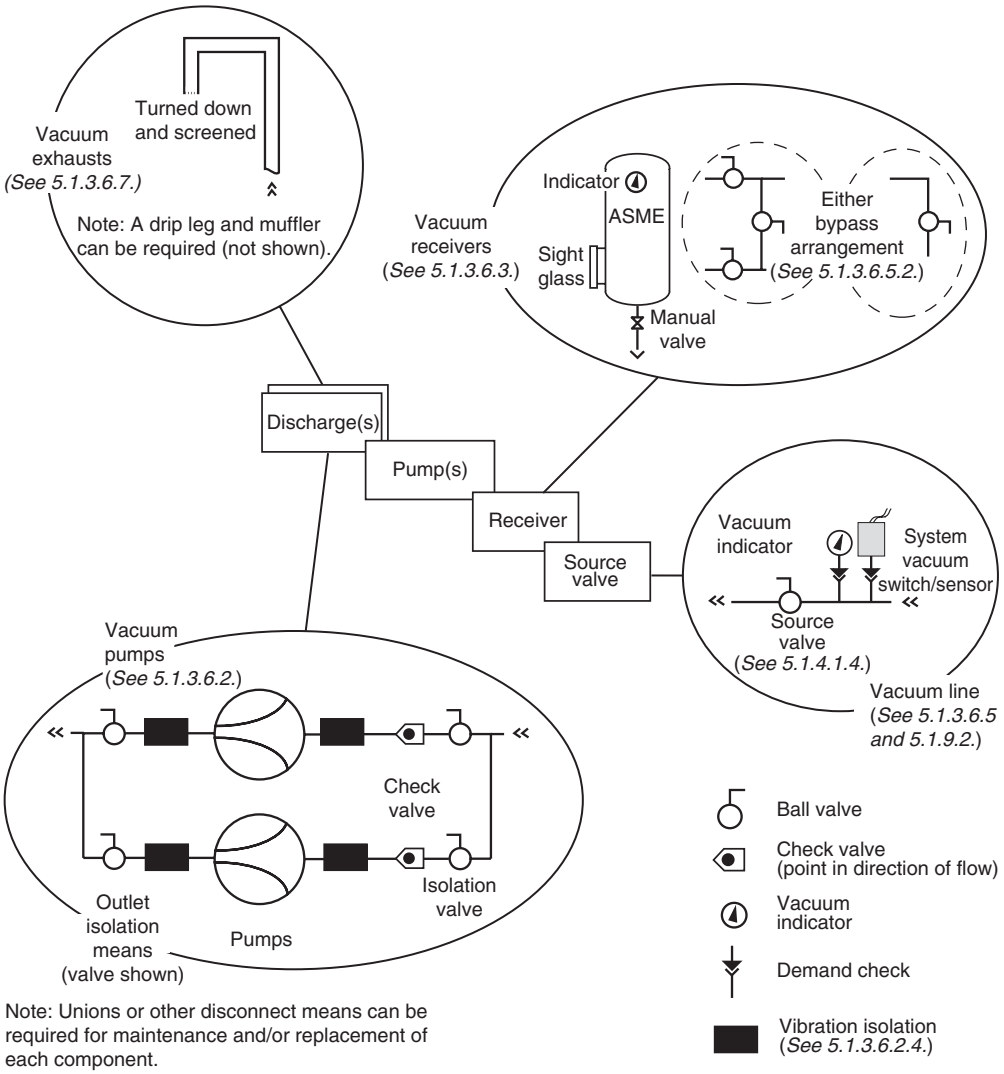

FIGURE A.5.1.3.6 Elements of a Typical Duplex Vacuum Source System (Level 1 Vacuum Systems).

Copyright National Fire Protection Association
Provided by IHS under license with NFPA
No reproduction or networking permitted without license from IHS
Not for Resale

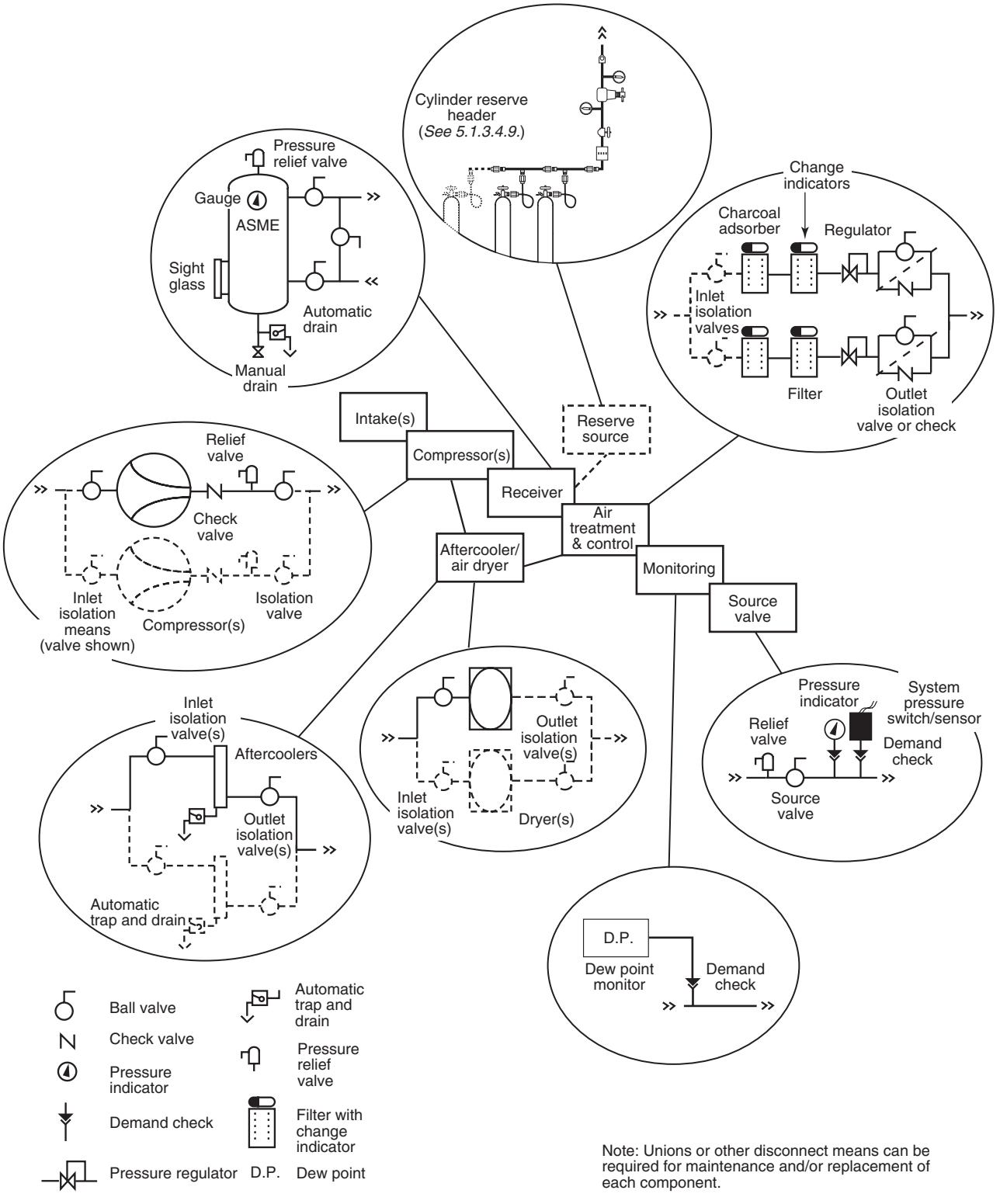

FIGURE A.5.1.3.8 Elements of Typical Instrument Air Source.

Copyright National Fire Protection Association
Provided by IHS under license with NFPA
No reproduction or networking permitted without license from IHS
Not for Resale

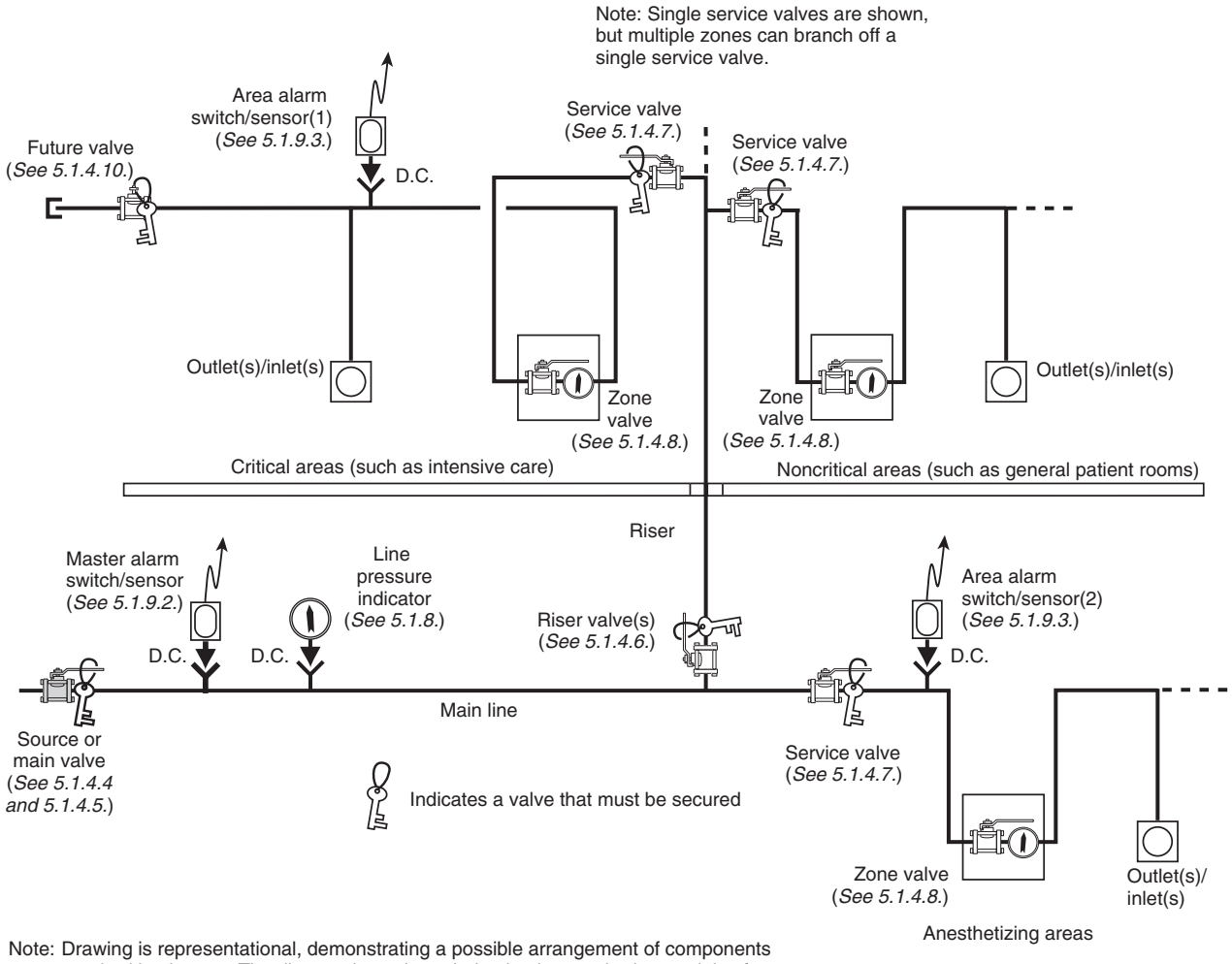

Note: Drawing is representational, demonstrating a possible arrangement of components required by the text. The diagram is not intended to imply a method, materials of construction, or more than one of many possible and equally compliant arrangements. Alternative arrangements are permitted if they meet the intent of the text. Listed paragraphs may not be the only paragraphs that apply.

1. Area alarms are required in critical care locations (examples may include intensive care units, coronary care units, angiography laboratories, cardiac catheterization laboratories, post anesthesia recovery rooms, and emergency rooms) and anesthetizing locations (examples may include operating rooms and delivery rooms). Refer to definitions for these areas.

2. Locations for switches/sensors are not affected by the presense of service or in-line valves (5.1.4.7.5, 5.1.4.9.2).

FIGURE A.5.1.4 Arrangement of Pipeline Components.

Copyright National Fire Protection Association
Provided by IHS under license with NFPA
No reproduction or networking permitted without license from IHS
Not for Resale

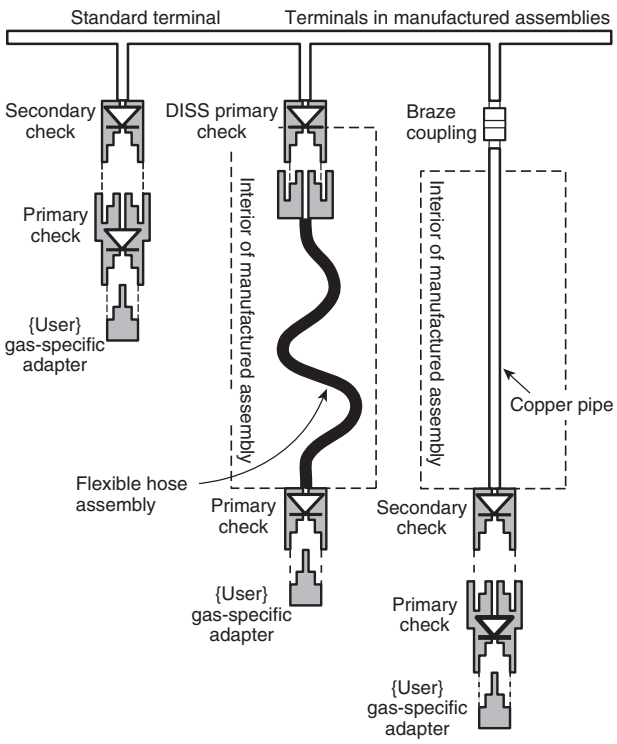

FIGURE A.5.1.6 Terminals in Manufactured Assemblies.

A.5.1.7 It is the intent that surface-mounted medical gas rail systems would be permitted in individual patient rooms but would not be allowed to go directly through room walls to adjacent patient rooms. However, it is the intent to allow surface-mounted medical gas rails to be used in a given critical care area where there can be a partition separating certain patient care functions, essentially leaving the system within the given critical care area. As an example, two adjacent patient rooms outside of a critical care unit would not be permitted to have a surface-mounted medical gas rail interconnect between the two rooms through the wall. However, in a nursery where there might be one or two segregated areas for isolation, a medical gas rail system supplying more than one isolation room, but within the nursery area, would be permitted to be interconnected with the nursery system.

A.5.1.7.9 Typical plating would be nickel plating over copper or brass per Federal Specification QQ-N290, Class I, Type 7.

A.5.1.9 See Figure A.5.1.4.

A.5.1.9.2 See Table A.5.1.9.2.

Table A.5.1.9.2 Requirements for Level 1 Master Alarms for Gas and Vacuum Systems

Alarm Condition	Manifold for Gas Cylinders w/o Reserve (5.1.3.4.10)	Manifold for Cryogenic Liquid Cylinders w/ Reserve (5.1.3.4.12)	Cryogenic Bulk w/Cryogenic Reserve (5.1.3.4.13)	Cryogenic Bulk w/Cylinder Reserve (5.1.3.4.13)	Medical Air Compressors (5.1.3.5)	Instrument Air Compressors (5.1.3.8)	Medical–Surgical Vacuum Pumps (5.1.3.6)	WAGD Producers (5.1.3.7)
Nitrogen main line pressure high	5.1.9.2.4(7)							
Nitrogen main line pressure low	5.1.9.2.4(7)							
Nitrogen changeover to secondary supply	5.1.3.4.10.6 5.1.9.2.4(1)							
Carbon dioxide main line pressure high	5.1.9.2.4(7)							
Carbon dioxide main line pressure low	5.1.9.2.4(7)							
Carbon dioxide changeover to secondary supply	5.1.3.4.10.6 5.1.9.2.4(1)							
Medical air main line pressure high	5.1.9.2.4(7)				5.1.9.2.4(7)			
Medical air main line pressure low	5.1.9.2.4(7)				5.1.9.2.4(7)			
Medical air changeover to secondary supply	5.1.3.4.10.6 5.1.9.2.4(1)							
Medical air dew point high					5.1.3.5.15(1) 5.1.9.2.4(10)			

Copyright National Fire Protection Association
Provided by IHS under license with NFPA
No reproduction or networking permitted without license from IHS
Not for Resale

Table A.5.1.9.2 *Continued*

Alarm Condition	Manifold for Gas Cylinders w/o Reserve (5.1.3.4.10)	Manifold for Cryogenic Liquid Cylinders w/ Reserve (5.1.3.4.12)	Cryogenic Bulk w/Cryogenic Reserve (5.1.3.4.13)	Cryogenic Bulk w/Cylinder Reserve (5.1.3.4.13)	Medical Air Compressors (5.1.3.5)	Instrument Air Compressors (5.1.3.8)	Medical–Surgical Vacuum Pumps (5.1.3.6)	WAGD Producers (5.1.3.7)
Oxygen main line pressure high	5.1.9.2.4(7)	5.1.9.2.4(7)	5.1.9.2.4(7)	5.1.9.2.4(7)				
Oxygen main line pressure low	5.1.9.2.4(7)	5.1.9.2.4(7)	5.1.9.2.4(7)	5.1.9.2.4(7)				
Oxygen changeover to secondary supply	5.1.3.4.10.6 5.1.9.2.4(1)	5.1.3.4.12.9(1) 5.1.9.2.4(1)	5.1.3.4.13.6(5) 5.1.9.2.4(1)	5.1.3.4.13.6(5) 5.1.9.2.4(1)				
Oxygen main supply less than one day (low contents)			5.1.3.4.13.6(1) 5.1.9.2.4(2)	5.1.3.4.13.6(1) 5.1.9.2.4(2)				
Oxygen reserve in use		5.1.3.4.12.9(3) 5.1.3.4.15.5 5.1.9.2.4(3)	5.1.3.4.13.6(2) 5.1.9.2.4(3)	5.1.3.4.13.6(2) 5.1.3.4.15.5 5.1.9.2.4(3)				
Oxygen reserve supply less than one day (low contents)		5.1.3.4.12.9(4) 5.1.9.2.4(5)	5.1.3.4.13.6(3) 5.1.9.2.4(5)					
Oxygen reserve pressure low (not functional)			5.1.3.4.11.6(4) 5.1.9.2.4(6)					
Nitrous oxide main line pressure high	5.1.9.2.4(7)	5.1.9.2.4(7)	5.1.9.2.4(7)	5.1.9.2.4(7)				
Nitrous oxide main line pressure low	5.1.9.2.4(7)	5.1.9.2.4(7)	5.1.9.2.4(7)	5.1.9.2.4(7)				
Nitrous oxide changeover to secondary supply	5.1.3.4.10.6 5.1.9.2.4(1)	5.1.3.4.12.9(1) 5.1.9.2.4(1)	5.1.3.4.13.6(5) 5.1.9.2.4(1)	5.1.3.4.13.6(5) 5.1.9.2.4(1)				
Nitrous oxide main supply less than one day (low contents)			5.1.3.4.13.6(1) 5.1.9.2.4(2)	5.1.3.4.13.6(1) 5.1.9.2.4(2)				
Nitrous oxide reserve in use		5.1.3.4.12.9(3) 5.1.3.4.15.5 5.1.9.2.4(3)	5.1.3.4.13.6(2) 5.1.9.2.4(3)	5.1.3.4.13.6(2) 5.1.3.4.15.5 5.1.9.2.4(3)				
Nitrous oxide reserve supply less than one day (low contents)		5.1.3.4.12.9(4) 5.1.9.2.4(5)	5.1.3.4.13.6(3) 5.1.9.2.4(5)					
Nitrous oxide reserve pressure low (not functional)			5.1.3.4.13.6(4) 5.1.9.2.4(6)					
Medical–surgical main line vacuum low							5.1.9.2.4(8)	
WAGD main line vacuum low								5.1.9.2.4(8)
Local alarm					5.1.3.5.14 5.1.9.2.4(9) 5.1.9.5.2	5.1.3.8.10 5.1.9.2.4(9) 5.1.9.5.2	5.1.3.6.8 5.1.9.2.4(9) 5.1.9.5.2	5.1.3.7.4 5.1.9.2.4(9) 5.1.9.5.2
Instrument air main line pressure high						5.1.9.2.4(7)		
Instrument air main line pressure low						5.1.9.2.4(7)		
Instrument air dew point high						5.1.3.8.10.1 5.1.9.2.4(12)		
Instrument air cylinder reserve in use (if provided)						5.1.3.8.10.2(1)		
Instrument air cylinder reserve less than one hour supply						5.1.3.8.10.2(2)		

Copyright National Fire Protection Association
Provided by IHS under license with NFPA
No reproduction or networking permitted without license from IHS
Not for Resale

Table A.5.1.9.3 Requirements for Level 1 Area Alarms

Alarm Condition	Paragraph Number of Requirement
High line pressure	5.1.9.3
(for each gas piped to the area)	5.1.9.3.1
	5.1.9.3.2
	5.1.9.3.4
Low line pressure	5.1.9.3
(for each gas piped to the area)	5.1.9.3.1
	5.1.9.3.2
	5.1.9.3.4
Low medical–surgical vacuum	5.1.9.3
(if piped to the area)	5.1.9.3.1
	5.1.9.3.3
	5.1.9.3.4
Low WAGD vacuum	5.1.9.3
(if piped to the area)	5.1.9.3.1
	5.1.9.3.3
	5.1.9.3.4

A.5.1.9.3 See Table A.5.1.9.3.

A.5.1.9.3.4(1) This signal is intended to provide immediate warning for loss of, or increase in, system pressure for each individual vital life support and critical care area.

A.5.1.9.3.4(2) This signal is intended to provide immediate warning for loss of, or increase in, system pressure for all anesthetizing locations supplied from a single branch line — not for each individual operating or delivery room.

A.5.1.9.5 Activation of any of the warning signals should immediately be reported to the department of the facility responsible for the medical gas piping system involved. If the medical gas is supplied from a bulk supply system, the owner or the organization responsible for the operation and maintenance of that system, usually the supplier, should also be notified. As much detail as possible should be provided. See Table A.5.1.9.5.

A.5.1.10.1.4 Operation of piped medical gas systems at gauge pressures in excess of 1280 kPa (185 psi) involves certain restrictions because of the limitations in materials.

A.5.1.10.3.1 A distinction is made between deep-socket solder-joint fittings (ASME B16.22) and those having shallow sockets for brazing (ASME B16.50). The use of shallow-socket brazing fittings improves the quality of the brazement without decreasing its strength, particularly in larger sizes, which are difficult to heat. See Table A.5.1.10.3.1 for socket depths conforming to ASME B16.50. The installer can use ASME B16.50 fittings (if available) or have the sockets on ASME B16.22 fittings cut down to ASME B16.50 depths. Where shallow-socket fittings are used for the medical gas piping, care should be taken to avoid their use in other piping systems where joints could be soldered instead of brazed.

A.5.1.10.5.5 The intent is to provide an oxygen-free atmosphere within the tubing and to prevent the formation of copper oxide scale during brazing. This is accomplished by filling the piping with a low-volume flow of low-pressure inert gas.

A.5.1.10.5.5.12 This is to assure a quality joint and to prevent the formation of copper oxide on the inside and outside surfaces of the joint.

A.5.1.10.6.5 Gas mixtures are commonly used in GTAW autogenous fusion welding. The identification of a gas mixture as "75He 25Ar" is a common industry term to define a commercially available grade from gas suppliers. Should test welding results lead to questions about the mixture percentage or gas quality, another bottle should be substituted and test welds performed.

A.5.1.12 All testing should be completed before putting a new piping system, or an addition to an existing system, into service. Test procedures and the results of all tests should be made part of the permanent records of the facility of which the piping system forms a part. They should show the room and area designations, dates of the tests, and name(s) of persons conducting the tests.

A.5.1.12.3.2 This is the final pressure test of the completely installed system and is intended to locate any leaks that would be more likely to occur at lower pressure, for example, leaks in station outlet valve seals.

A.5.1.12.3.11(3) The committee recognizes that current clinical practice is to use analyzers that might not be able to analyze oxygen to current U.S.P. requirements of 99 percent, and that these analyzers frequently have an error of up to 3 percent.

A.5.1.13 All cylinders containing compressed gases, such as anesthetic gases, oxygen, or other gases used for medicinal purposes, whether these gases are flammable or not, should comply with the specifications and be maintained in accordance with regulations of the U.S. Department of Transportation.

Cylinder and container temperatures greater than 52°C (125°F) can result in excessive pressure increase. Pressure relief devices are sensitive to temperature and pressure. When relief devices actuate, contents are discharged.

A.5.1.13.1.4 Vacuum systems from station inlets to the exhaust discharge should be considered contaminated unless proven otherwise. Methods exist to disinfect the system or portions thereof.

Clogging of regulators, for example, with lint, debris, or dried body fluids, reduces vacuum system performance.

A.5.2.1 Section 5.1 covers requirements for Level 1 piped gas and vacuum systems; Section 5.2 covers Level 2 piped gas and vacuum systems; Section 5.3 covers Level 3 piped gas and vacuum systems. Laboratory systems are no longer covered by Chapter 5 (2002 edition).

A.5.3 A Level 3 vacuum system is not intended for Level 1 medical–surgical vacuum applications. A Level 3 wet piping system is designed to accommodate liquid, air–gas, and solids through the service inlet. A Level 3 dry piping system is designed to accommodate air–gas only through the service inlet, with liquids and solids being trapped before entering the system.

A.5.3.1 Section 5.1 covers requirements for Level 1 piped gas and vacuum systems; Section 5.2 covers Level 2 piped gas and vacuum systems; Section 5.3 covers Level 3 piped gas and vacuum systems. Laboratory systems are no longer covered by Chapter 5 (2002 edition).

--`,,```,,,,````-`-`,,`,,`,`,,`---

Copyright National Fire Protection Association
Provided by IHS under license with NFPA
No reproduction or networking permitted without license from IHS
Not for Resale

Table A.5.1.9.5 Requirements for Level 1 Local Alarms

Alarm Condition	Medical Air Compressors					
	Oil-less (Sealed bearing) 5.1.3.5.4.1(1)	Oil-Free (separated) 5.1.3.5.4.1(2)	Liquid Ring (water-sealed) 5.1.3.5.4.1(1)	Instrument Air Compressors	Medical–Surgical Vacuum Pumps	WAGD Producers
Backup (lag) compressor in operation	5.1.3.5.14.5 5.1.9.5.4(1)	5.1.3.5.14.5 5.1.9.5.4(1)	5.1.3.5.14.5 5.1.9.5.4(1)			
Backup (lag) medical–surgical vacuum pump in operation					5.1.3.6.8 5.1.9.5.4(4)	
Backup (lag) WAGD producer in operation						5.1.3.7.4.1 5.1.3.7.4.4 5.1.9.5.4(5)
Backup (lag) instrument air compressor in operation				5.1.3.8.10.1(1) 5.1.9.5.4(1)		
Carbon monoxide high	5.1.3.5.15(2) 5.1.9.5(2)	5.1.3.5.15(2) 5.1.9.5(2)	5.1.3.5.15(2) 5.1.9.5(2)			
High discharge air temperature	5.1.3.5.14.3 5.1.9.5.4(9)	5.1.3.5.14.4(1) 5.1.9.5.4(9)				
High water in receiver	5.1.3.5.14.1 5.1.9.5.4(7)	5.1.3.5.14.1 5.1.9.5.4(7)	5.1.3.5.14.1 5.1.9.5.4(7)			
High water in separator			5.1.3.5.14.2 5.1.9.5.4(8)			
Medical air dew point high	5.1.3.5.15(1) 5.1.9.5.4(3)	5.1.3.5.15(1) 5.1.9.5.4(3)	5.1.3.5.15(1) 5.1.9.5.4(3)			
Instrument air dew point high				5.1.3.8.10.1(2) 5.1.9.5.4(6)		

Table A.5.1.10.3.1 Socket Depths for ASME B16.50 Brazing Fittings

Tube Size (in.)	Socket Depth (in.)
¼ (⅜ O.D.)	0.17
⅜ (½ O.D.)	0.2
½ (⅝ O.D.)	0.22
¾ (⅞ O.D.)	0.25
1 (1⅛ O.D.)	0.28
1¼ (1⅜ O.D.)	0.31
1½ (1⅝ O.D.)	0.34
2 (2⅛ O.D.)	0.40
2½ (2⅝ O.D.)	0.47
3 (3⅛ O.D.)	0.53
4 (4⅛ O.D.)	0.64
5 (5⅛ O.D.)	0.73
6 (6⅛ O.D.)	0.83

A.5.3.3.2 When the storage/supply enclosure is remote from the single treatment facility, it should be locked for security reasons to prevent tampering. Access should be only via authorized staff or fire department. When the enclosure is within the single treatment facility, it is left to the discretion of the single treatment facility management as to whether greater benefit is achieved by immediate access or by security. An enclosure with direct access from a public hallway should be locked. If the door to the enclosure opens onto an exit access corridor, see 5.1.3.3.3.1(F). See Figure A.5.3.3.2.

A.5.3.3.4.4 See Figure A.5.3.3.4.4 for an illustration of single treatment locations.

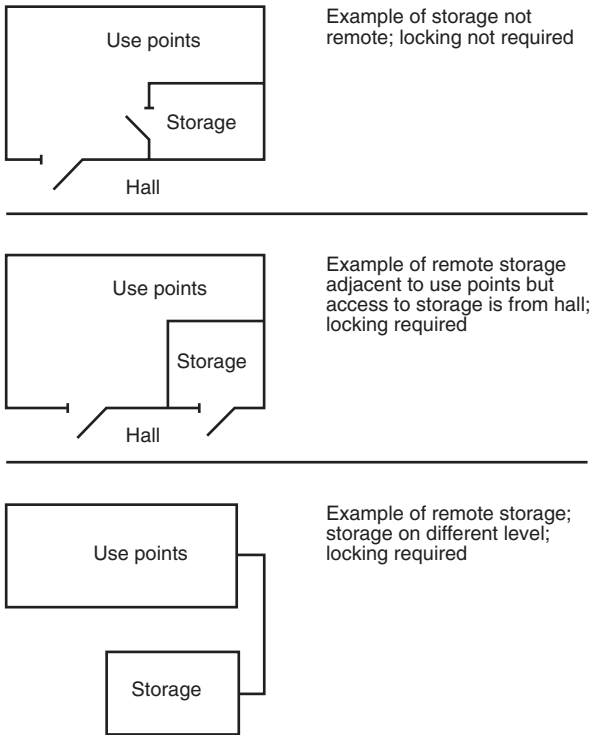

FIGURE A.5.3.3.2 Examples of Storage/Supply Enclosures.

Copyright National Fire Protection Association
Provided by IHS under license with NFPA
No reproduction or networking permitted without license from IHS
Not for Resale

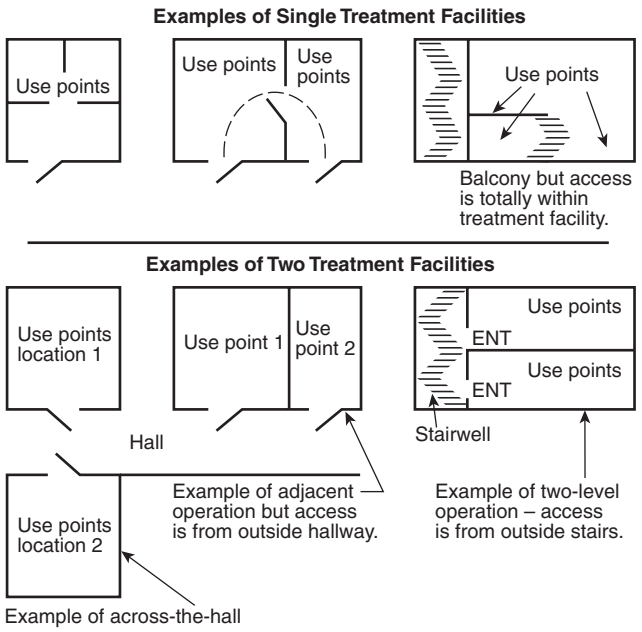

FIGURE A.5.3.3.4.4 Examples of Single Treatment Locations.

A.5.3.3.4.4.2 If the supply system is within the confines of a single treatment facility, a simple manual transfer is permissible. Only high/low pressure alarms are required. The gases are to be manifolded so a quick manual transfer is possible without life-threatening consequences.

However, if the supply system is remote, a prompt transfer of gases becomes more difficult. It could require transcending one or more flights of stairs and/or going to a remote location on the same floor. Under these situations an automatic system is required.

A.5.3.3.4.4.4 The installation of a supply serving more than one single treatment facility creates by its very nature a remote location relative to the other facility. Because more than one practice could be involved, the transfer of oxygen and nitrous oxide gases is to be automatically achieved.

A.5.3.3.5 Level 3 compressed air and nitrogen gas systems are used primarily to drive gas-powered power devices. See Figure A.5.3.3.5 for an illustration of this type of system. Similar applications are in podiatry and plastic surgery. Examples of these are air used to drive turbine-powered drills and air used to dry teeth and gums. Some dental hand pieces have an internal self-contained air return system, while other hand pieces discharge air into the atmosphere. Some discharge a mixture of air and water. Nitrogen is often piped as an alternate or reserve supply to the compressor system.

The application of dental compressed air is not used for life-support purposes such as respirators, IPPB machines, analgesia, anesthesia, and so forth. Air discharged into the oral cavity is incidental and not a primary source of air to sustain life. However, if there is a coincident use of dental air for providing respiratory support, the requirements of dental air will be superseded by those of the respiratory support, and the compressed air system has to produce the higher quality, medical compressed air as defined in Chapter 3. This could affect the selection of a compressor.

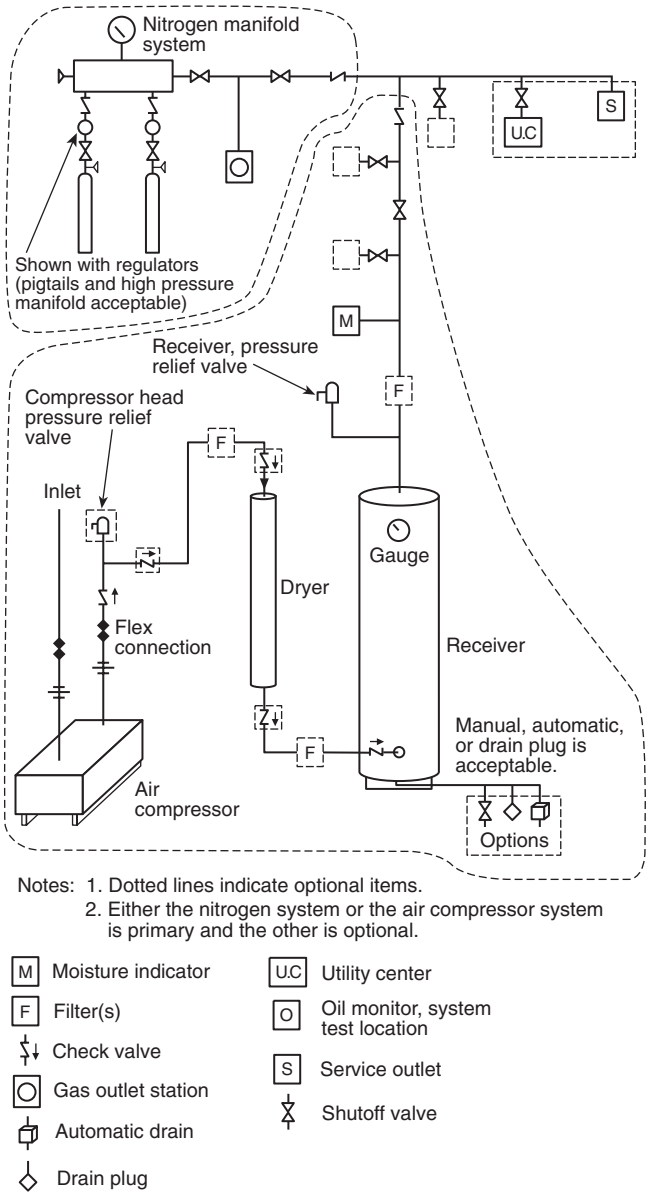

FIGURE A.5.3.3.5 Level 3 Gas-Powered Devices Supply System.

A dental compressed air system should not be used to provide power for an air-powered evacuation system without specific attention paid to the discharge of the evacuated gases and liquids. An open discharge of evacuated gases into the general environment of an operatory could compromise the quality of breathing air in the treatment facility. Air discharge should be vented to the outside of the building through a dedicated vent.

An air-powered evacuation system might require significant quantities of air to operate.

Manufacturer's recommendations should be followed regarding proper sizing of the air compressor. Inadequate sizing can result in overheating, premature compressor failures, and inadequate operating pressures and flows.

A.5.3.3.5.2 Compressed-air quality can be compromised and expected life of system components can be shortened if an

Copyright National Fire Protection Association
Provided by IHS under license with NFPA
No reproduction or networking permitted without license from IHS
Not for Resale

undersized system is installed. Manufacturer's recommendations should be followed regarding proper sizing of the air compressor(s).

A.5.3.3.5.5 A color dew point monitor downstream of the receiver indicating the quality of air coming into the receiver is desirable.

A color dew point monitor in the main treatment facility is appropriate to help the staff promptly identify when the system is being degraded with air of a dew point higher than is acceptable.

The design of the color monitor should be such that the normal tolerance of variations will limit the maximum moisture at 39°F at a gauge pressure of 100 psi (3.9°C at 690 kPa) at activation.

A.5.3.3.5.7 The environmental air source for the compressor inlet should take into consideration possible contamination by particulates, concentrations of biological waste contaminants, ozone from nearby brush-type electric motors, and exhaust fumes from engines.

Air taken from an outside atmosphere could cause harmful condensation problems in the compressor. Long runs of inlet tube should also be avoided as it will degrade compressor performance. The compressor manufacturer's recommendations should be followed regarding appropriate pipe size to prevent possible degradation of system performance.

A dental air compressor and dental vacuum system can be in the same equipment room as long as the inlet for the dental air compressor does not draw air from a room or space containing an open discharge for the dental vacuum system.

Atmospheric air in an operatory can have traces of mercury vapor and other contaminants. A compressor inlet location that would draw its supply directly from an operatory should be avoided.

A.5.3.3.5.8 If nitrogen is used as a backup supply to a compressed gas system, the nitrogen operating pressure should be regulated so as not to exceed the operating pressure of the Level 3 compressed air system.

A.5.3.3.5.8.6 The cubic feet (or cubic meters) of stored nitrogen gas is not restricted.

A.5.3.3.6 A Level 3 vacuum system is not intended for Level 1 vacuum applications. A wet piping system is designed to accommodate liquid, air–gas, and solids through the service inlet. A dry piping system is designed to accommodate air–gas only through the service inlet. [Liquid(s) and solid(s) are trapped before entering the service inlet.] See Figure A.5.3.3.6(a) through Figure A.5.3.3.6(d).

A.5.3.3.6.3 Improper design will permit gas pressure to build up in the ventilation system and might blow the trap on liquid seals. See Figure A.5.3.3.6.3(a) and Figure A.5.3.3.6.3(b).

A.5.3.3.6.4.8 Care should be taken to ensure the dual exhaust systems do not develop excessive back pressure when using a common exhaust line.

A.5.3.4 See Figure A.5.3.4 for diagrams showing emergency shutoff valve locations. Should a fire occur at night or when the facility is not in use, fire fighters should not be confronted with a potential pressurized gas source that could feed the fire and cause extensive damage and risk of life. Good economics also dictate that when the system is not in use, the leakage of gas through hose, couplings, and so forth, can be minimized if the system is shut off and portable equipment disconnected.

A.5.3.5 Service outlets can be recessed or otherwise protected from damage.

A.5.3.5.2 This configuration will ensure that the required pressure and flow meet the secondary equipment manufacturer's requirements.

A.5.3.10.7.5 The intent is to provide an oxygen-free atmosphere within the tubing and to prevent the formation of copper oxide scale during brazing. This is accomplished by filling the piping with a low-volume flow of low-pressure inert gas.

A.5.3.10.10.3 One of the major concerns is the cross-connection of piping systems of different gases. The reason for different sizes is to prevent cross-connections, not for capacity concerns.

A.5.3.12.3.10(3)(b) The committee recognizes that current clinical practice is to use analyzers that might not be able to analyze oxygen to current U.S.P. requirements of 99 percent, and that these analyzers frequently have an error of up to 3 percent.

A.6.1 The application of requirements contained in this chapter for specific types of health care facilities can be found in Chapters 13 through 19.

A.6.4 For additional distribution requirements, see NFPA 90A, *Standard for the Installation of Air-Conditioning and Ventilating Systems*, and NFPA 90B, *Standard for the Installation of Warm Air Heating and Air-Conditioning Systems*.

A.6.4.1.1 Advantages claimed for humidity include avoidance of hypothermia in patients, especially during long operative procedures; the fact that floating particulate matter increases in conditions of low relative humidity; and the fact that the incidence of wound infections can be minimized following procedures performed in those operating rooms in which the relative humidity is maintained at the level of 50 to 55 percent.

A.6.4.2.1 Prevalent practice when laboratories are provided with supply and exhaust ventilation is to design the fume hood exhaust as an integral part of the balanced ventilating system, so that the fume hood exhaust is in constant operation.

A.6.4.2.3 The discharge side of fume hood exhaust fans is under positive pressure and often leaks toxic fumes into the surrounding environment; therefore, all fume hood exhaust fans should be installed outdoors, and not inside penthouses or other mechanical equipment enclosures that have to be frequented by maintenance and service personnel.

A.6.4.3.1 Biological safety cabinets (BSC) that are vented to the outside share some characteristics with chemical fume hoods. The interiors of each are at negative pressure with respect to the ambient environment. BSC are not intended to be used for protection from exothermic or potentially explosive chemical reactions. *[See HHS Publication No. (CDC) 93-8395, Biosafety in Microbiological and Biomedical Laboratories, for a description of BSC and their ventilating requirements.]*

A.6.4.3.3 See NFPA 801, *Standard for Fire Protection for Facilities Handling Radioactive Materials*, for related information.

A.6.4.3.4.2 The qualified person can be a staff member of the facility.

A.6.6.2 Warning signs should include, or reference, information on hazards, and on the changing, handling, and disposal of filters.

Copyright National Fire Protection Association
Provided by IHS under license with NFPA
No reproduction or networking permitted without license from IHS
Not for Resale

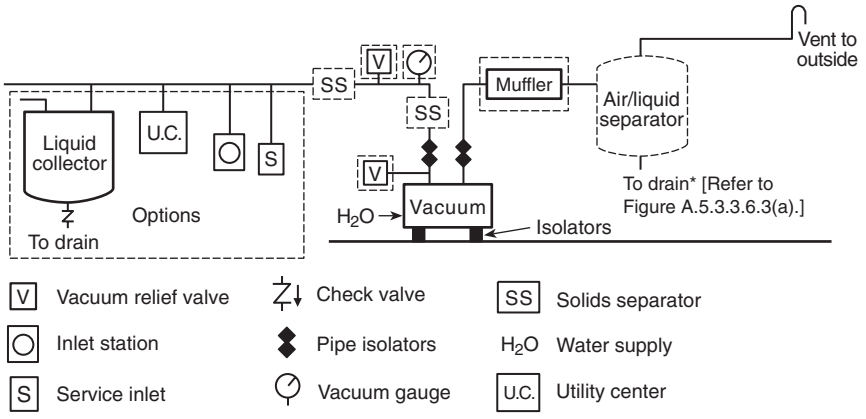

Note: Dotted lines indicate optional items.
*Does not have to be below floor.

FIGURE A.5.3.3.6(a) Typical Level 3 Wet or Dry Piping Systems with Single Vacuum Pump Source.

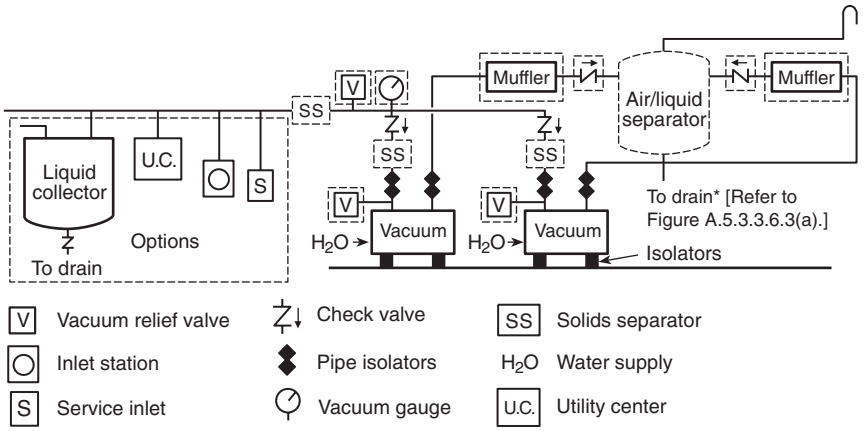

Note: Dotted lines indicate optional items.
*Does not have to be below floor.

FIGURE A.5.3.3.6(b) Typical Level 3 Wet or Dry Piping System with Duplex Vacuum Source with Air/Liquid Separator.

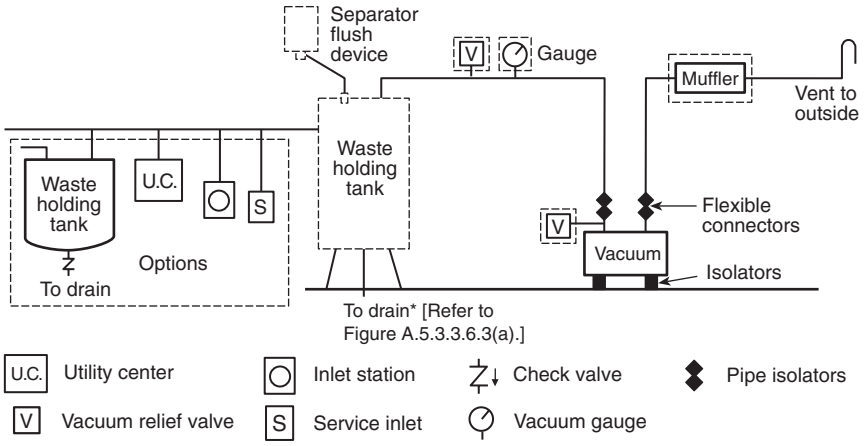

Note: Dotted lines indicates optional items.
*Does not have to be below floor.

FIGURE A.5.3.3.6(c) Typical Level 3 Wet or Dry Piping System with Single Vacuum Source.

Copyright National Fire Protection Association
Provided by IHS under license with NFPA
No reproduction or networking permitted without license from IHS
Not for Resale

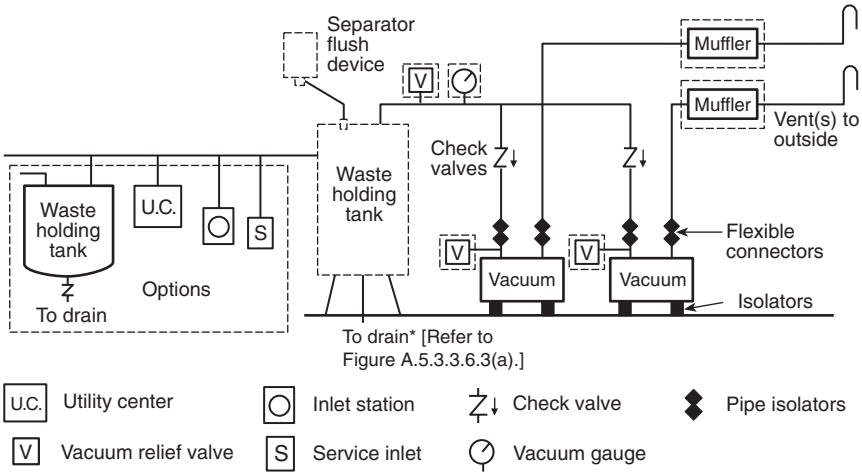

Note: Dotted lines indicates optional items.
*Does not have to be below floor.

FIGURE A.5.3.3.6(d) Typical Level 3 Wet or Dry Piping System with Duplex Vacuum Source with Waste Holding Tank.

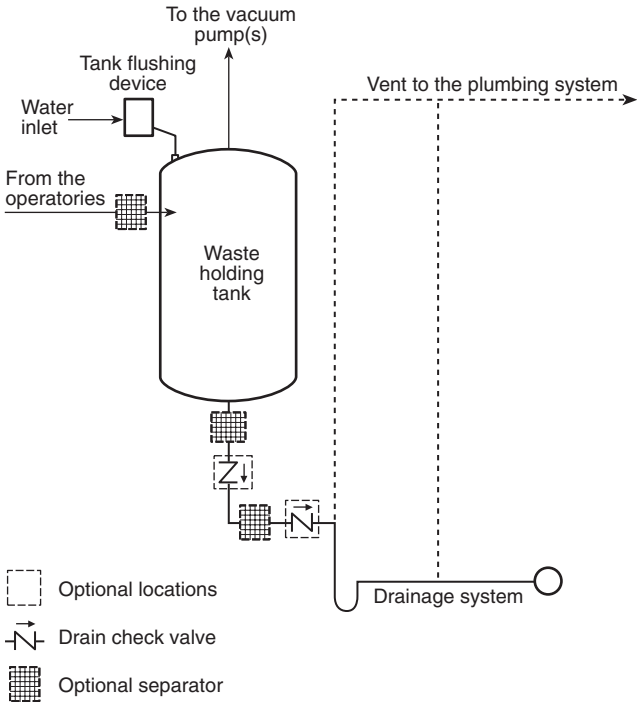

FIGURE A.5.3.3.6.3(a) Drainage from a Gravity Drained Liquid Collector Tank.

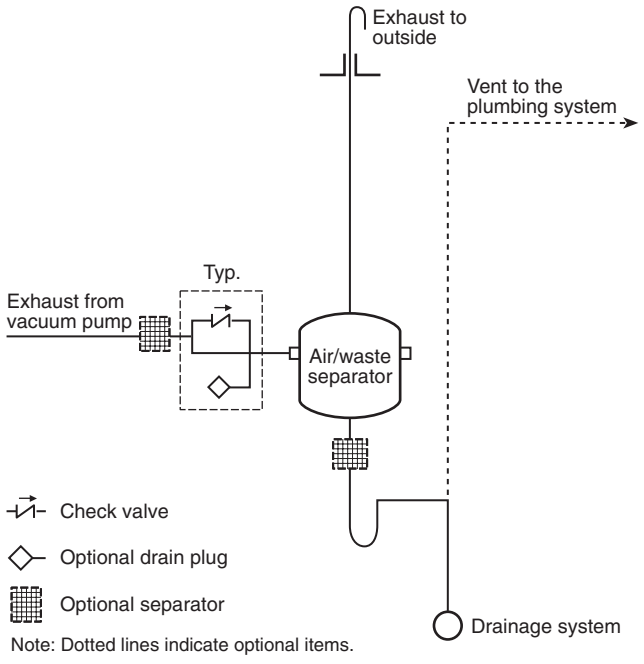

Note: Dotted lines indicate optional items.

FIGURE A.5.3.3.6.3(b) Drainage from a Positive Discharge Vacuum Pump through an Air/Liquid Separator.

Copyright National Fire Protection Association
Provided by IHS under license with NFPA
No reproduction or networking permitted without license from IHS
Not for Resale

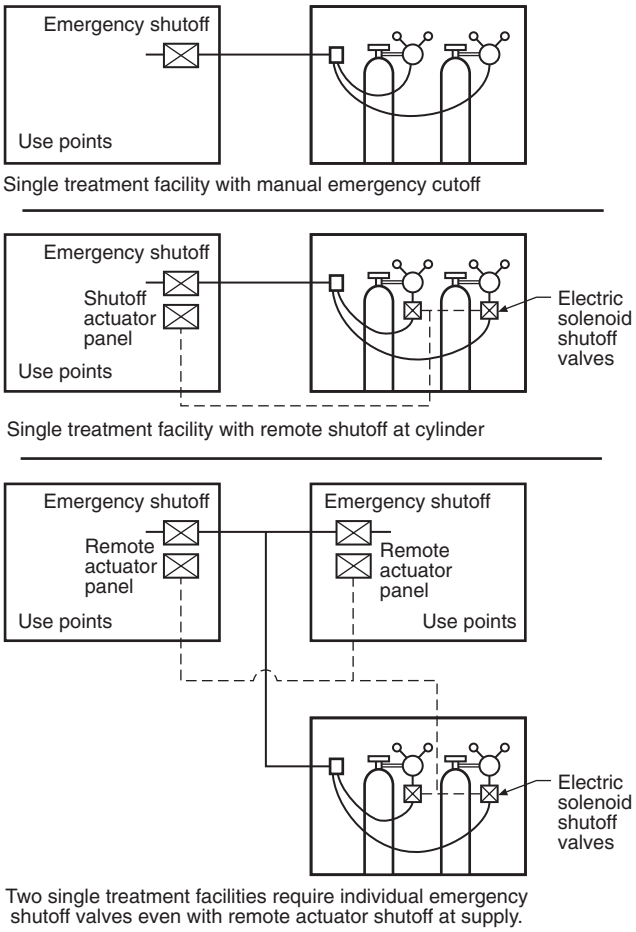

FIGURE A.5.3.4 Valves in Level 3 Facilities.

A.7.1 The application of requirements contained in this chapter for specific types of health care facilities can be found in Chapters 13 through 19.

A.7.2.2.2.1.1 Hand cleaning dispensers or other flammable liquids should not be placed in corridors, means of egress, or other areas not located within the patient room. NFPA *101*, *Life Safety Code*, Chapter 18 and 19.7.5, prohibits combustible decorations and similar items from being in heath care occupancies.

A.8.1 The application of requirements contained in this chapter for specific types of health care facilities can be found in Chapters 13, 14, 17, 18, 19, and 21.

This chapter originated from a concern about electrical safety in the hospital. It resulted in NFPA 76B-1980, *Safe Use of Electricity in Patient Care Areas of Hospitals* (incorporated into NFPA 99 in 1984).

This chapter states the basic electrical safety performance criteria for patient care areas to be followed by personnel. Chapter 10 provides performance criteria for manufacturers of appliances. Chapter 4 provides performance criteria for the installation implementation requirements contained in Article 517 of NFPA 70, *National Electrical Code*. The purpose of these chapters is the practical safeguarding of patients and staff from the hazards arising from the use of electricity in medical diagnosis and therapy.

The material in this annex, as it relates to electrical safety (see A.4.1 and A.8.1), interprets some of the basic criteria by presenting different methodologies and alternative procedures to achieve the level of safety defined by the criteria.

A.8.4.1.2.4.2(2) Whole-body hyperthermia/hypothermia units should be powered from a separate branch circuit.

A.8.4.1.2.4.2(4) See Chapter 4 for criteria of receptacles.

A.8.4.1.2.4.3(2) The disconnection means is permitted only to facilitate replacement; as such, ceiling drop cords can not be disconnected for alternative usage. See Chapter 4 for criteria of receptacles.

A.8.4.1.2.5(2) For policy on the use of extension cords, see 8.5.2.1.7.1.

A.8.4.1.3.2 There are several methods for measuring ground-wire resistance accurately. Three examples are described as follows and shown in Figure A.8.4.1.3.2(a) through Figure A.8.4.1.3.2(c):

(1) *Two-Wire Resistance Technique.* A known current is fed through the unknown resistance. A high-input-impedance voltmeter measures the voltage drop across the resistance and R is calculated as V/I. This technique measures the lead resistance in series with the unknown resistance. When the unknown resistance is a ground wire (less than 0.15 ohm), the lead resistance is appreciable. This is accounted for by shorting the lead wires together and "zeroing" the voltmeter. The actual resistance in effect subtracts out the lead wire resistance. In order for this technique to be reasonably accurate for measuring ground wires, an active high-impedance millivoltmeter has to be used.
(2) *Four-Wire Resistance Technique.* This technique is very similar to the two-wire resistance technique. The difference is that the known current is fed to the resistance to be measured through a pair of leads separate from the pair of leads to the voltmeter. The voltmeter is measuring the true voltage across the resistance to be measured regardless of the resistance of the measuring leads. This method eliminates the need for zeroing out the measuring lead resistance.
(3) *AC Current Method.* This technique utilizes a step-down transformer of known voltage output to feed current through the ground wire and measure the current that flows. The impedance of the ground wire is then calculated by Ohm's Law.

Note that the internal impedance of the measuring circuit has to be established with the test leads shorted. This value needs to be subtracted from the test measurement.

A.8.4.1.3.3 For complex leakage current waveforms, a single reading from an appropriate metering system can represent the physiologically effective value of the composite waveform, provided that the contribution of each component to the total reading is weighted in accordance with 8.4.1.3.3 or 10.2.13.3.

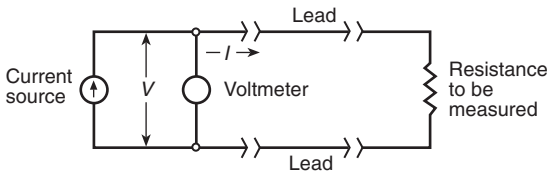

FIGURE A.8.4.1.3.2(a) Two-Wire Resistance Technique.

--`,,```,,,,````-`-`,,`,,`,`,,`---

Copyright National Fire Protection Association
Provided by IHS under license with NFPA
No reproduction or networking permitted without license from IHS
Not for Resale

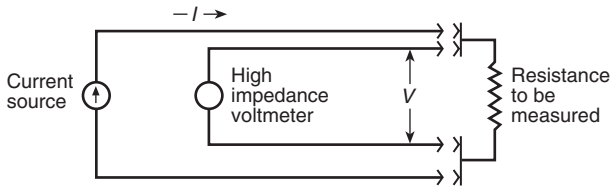

FIGURE A.8.4.1.3.2(b) Four-Wire Resistance Technique.

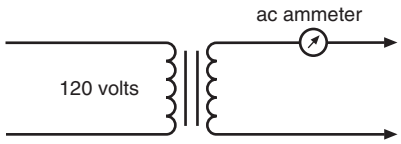

FIGURE A.8.4.1.3.2(c) AC Current Method.

This "weighting" can be achieved by a frequency response–shaping network that precedes a flat-response meter, or by a meter whose own frequency response characteristic matches 8.4.1.3.3 or 10.2.13.3.

If the required performance is obtained by a meter with integral response shaping properties, then that meter should have a constant input resistance of 1000 ohms. (A high-input-impedance meter can be used by shunting a 1000-ohm resistor across the meter's input terminals.)

If, however, the required frequency response is obtained by a network that precedes an otherwise flat-response meter, then the input impedance of the network should be 1000 ohms ± 10 percent, over the frequency range from 0 to 1 MHz, and the frequency response of the network–meter combination should be substantially independent of the impedance of the signal source.

For maximum chassis leakage current allowed (i.e., 300 μA) below 1 kHz, this network will yield the limiting current of 10 mA above 30 kHz.

A suggested input network is shown in Figure A.8.4.1.3.3.

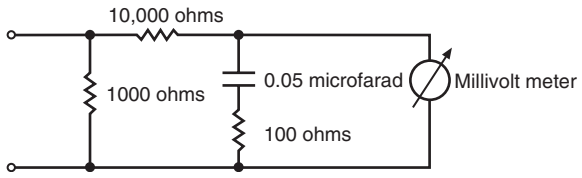

FIGURE A.8.4.1.3.3 Leakage Current Measurements (1.0 millivolt meter reading corresponds to input current of 1.0 microampere).

A.8.4.1.3.3.2 This test is not valid when performed on the load side of an isolation transformer or an isolated power system because the values obtained will be falsely low.

A.8.4.1.3.3.3 The limits for nonsinusoidal periodic, modulated, and transient waveforms remain to be determined.

For complex leakage-current waveforms, a single reading from an appropriate metering system can represent the physiologically effective value of the composite waveform, provided that the contribution of each component to the total reading is weighted in accordance with 8.4.1.3.3.3. This weighting can be achieved by a frequency response–shaping network that precedes a flat-response meter, or by a meter whose own frequency-response characteristic matches 8.4.1.3.3.3.

A.8.4.1.3.5.1 Where existing equipment exceeds 500 μA, methods to reduce leakage current, such as the addition of small isolation transformers to that device, or methods that provide equivalent safety by adding redundant equipment ground are permissible.

A.8.4.1.3.6.1 Although the chassis leakage current value is 300 μA, patient lead leakage current limit for non-isolated input has been intentionally limited to 100 μA. This decision is in recognition of the need for a greater level of electrical safety for those portions of devices that make direct electrical patient connection.

A.8.4.2.2.2 As a guideline, 500 μA is recommended as the maximum allowable leakage current limit for laboratory equipment.

A.8.4.2.2.2.5 Electrical equipment has been a frequent source of ignition of flammable concentrations of gases and vapors when combustible and flammable liquids and gases have been used in or near equipment not designed or safe for such use. While general and special ventilation will usually prevent the accumulation of flammable concentrations of gases and vapors in health care laboratories, the hazards should be recognized. Recommended practice is to evaluate at least annually what combustible and flammable liquids and gases are being used in the laboratory, what electrical equipment is exposed to flammable vapors and gases routinely or under reasonably foreseeable circumstances, whether special listed and labeled electrical equipment is available and justified, or whether equivalent safety can be provided more economically and practically by ventilation or quantity limitations.

As an educational measure in laboratories that have many personnel and electrical devices and that handle combustible or flammable liquids in containers larger than 1.69 oz (50 ml), electrical equipment not listed or labeled for use in hazardous atmospheres should be marked with precautionary signs or labels with a legend such as the following:

May ignite flammable vapors or gases. Not safe for use with exposed organic liquids with flash point temperatures below 100°F (37.8°C) (or the temperature of the high-limit cutoff if the equipment is designed for heating, e.g., oil bath or hot plate).

A.8.5.2.1.4 The 500-mV limit is based on physiological values. Since the actual voltages normally measured in modern construction are usually less than 10 mV with nominal construction, voltages exceeding 20 mV might indicate a deteriorating condition and should be investigated.

The 40-mV limit is based on physiological values. Since the actual voltages normally measured in modern construction are usually less than 10 mV with nominal construction, voltages exceeding 20 mV might indicate a deteriorating condition and should be investigated.

A.8.5.2.1.8 When delivering energy, such appliances can deviate from these requirements only to the extent essential for their intended clinical function.

Appliances that intentionally or that can inadvertently apply electrical energy to the patient or to components in contact with the patient require special safety considerations.

Copyright National Fire Protection Association
Provided by IHS under license with NFPA
No reproduction or networking permitted without license from IHS
Not for Resale

Since there is a wide range of power levels, output frequencies, and purposes of appliances that apply electricity directly to patients or to patient-connected devices, it is not feasible to cite them in detail.

A.8.5.2.1.9(5) The facility might wish to reference compliance with this chapter and Chapter 10 on its purchasing document.

A.8.5.2.1.10 Consideration should be given to requiring the vendor to sell parts to the individual or group designated by the hospital to service the equipment following the warranty period.

A.8.5.2.4.1 For further information, see manufacturer requirements for equipment used within the site of intentional expulsion in 10.2.9.3.

A.8.5.2.4.5 For further information, see manufacturer requirements for equipment used in oxygen delivery equipment in Section 10.2.

The use of electrical equipment in spaces where there is a high oxygen content is a matter of concern because of the fire hazard. It is particularly a problem where the oxygen is "pure," that is, 80–90 percent, because materials not very flammable in ordinary air become extremely flammable in pure oxygen.

In medical practice, particularly in surgery, patients are often given supplemental oxygen, via respirator, anesthesia machines, and so forth. Such supplements can range from room air to 100 percent oxygen. Clearly, different levels of protection are needed.

This standard addresses the problem by defining three elements of the situation:

(1) *Kind of Air.* An oxygen-enriched atmosphere (OEA) is air that ranges from slightly enriched (23.5 percent rather than 21 percent) to total oxygen (100 percent).
(2) *Kind of Apparatus.* Oxygen delivery equipment (ODE) is a device to deliver an OEA to a patient.
(3) *Kind of Space.* A site of intentional expulsion (SIE) is a small volume where oxygen that has been delivered to the patient is discharged to the ambient air.

When an OEA is within an ODE, it is much more likely to have a high concentration of oxygen. Paragraph 10.2.9.3 therefore advises manufacturers, and A.8.5.2.4.5 advises users, of precautions to take to reduce the fire hazard. Paragraph 10.2.9.3 lists four ways of attacking the problem. Note that an OEA can be created not only in a ventilator or oxygen tubing, but also in an oxygen tent or incubator. Special precautions should be taken.

At the other extreme of hazard is a space in the open air, the SIE. This space is defined as within 12 in. (30.5 cm) of the exhaust port, because, in most instances, dilution to ambient levels occurs within a few inches of the port; 12 in. (30.5 cm) provides an adequate safety factor. Paragraph 10.2.9.3 provides guidance to minimize this hazard by requiring that only those parts of the apparatus that are intended to be within the SIE are of concern. Even these, such as nurse call buttons, leads, and so forth, do not necessarily need to be listed for use in OEA because they usually conform to provisions of subparagraph (d), that is, they do not have hot surfaces and they meet the requirements of Figure 10.2.9.3(a) through Figure 10.2.9.3(f).

The intent of A.8.5.2.4.5 is to advise users to specify appliances that meet higher requirements where the hazard is higher, but not to overspecify where the hazard is minimal. Thus, as they are ordinarily used, nurse call buttons, pillow speakers, and so forth, do not need to be listed for use in oxygen-enriched atmospheres.

Note, however, that these requirements apply only to the intended use. The user should exercise vigilance to guard against an unintended use or an accidental failure, which can vastly increase the hazard.

A.8.5.2.4.6 Where possible, combustible materials such as hair, fabric, and paper should be removed from the vicinity of where the energy is delivered. Water-soluble surgical jelly has been shown to dramatically reduce the combustibility of these materials.

A.8.5.2.5.1 One reason for requiring testing of all electrical equipment used in the laboratory is to provide minimum assurance against electrical macroshock hazards.

A.8.5.2.5.2 Most laboratory fires involve biomedical or other electronic equipment failures. The most common ignition factors are short circuits or ground faults. Electrical wire or cable insulation is the material most likely to first ignite in a clinical laboratory fire. *(See Hoeltge, G.A., Miller, A., Klein, B.R., Hamlin, W.B., "Accidental fires in clinical laboratories.")*

A.8.5.3.1.2 Although several approaches to documentation exist in hospitals, the minimum acceptable documentation should convey what was tested, when it was tested, and whether it performed successfully. Adopting a system of exception reporting can be the most efficient form of recordkeeping for routine rechecks of equipment or systems and thereby minimize technicians' time in recording the value of each measurement taken. For example, once a test protocol is established, which simply means testing the equipment or system consistent with Chapter 8, the only item (value) that needs to be recorded is what failure or what deviation from the requirements of the chapter was detected when a corrective action (repair) was undertaken. This approach can serve to eliminate, for example, the need to keep individual room sheets to record measured results on each receptacle or to record measurement values of all types of leakage current tests.

A.8.5.5.1 "Personnel" includes physicians, nurses, nursing assistants, engineers, and technicians.

A.9.1 The application of requirements contained in this chapter for specific types of health care facilities can be found in Chapters 6, 13, 14, 17, 18, 19, and 21.

A.9.1.1 Respiratory therapy is an allied health specialty employed with medical direction in the treatment, management, control, diagnostic evaluation, and care of patients with deficiencies and abnormalities of the cardiopulmonary system. (Courtesy of the American Association for Respiratory Therapy, 1720 Regal Row, Dallas, TX 75235.)

Respiratory therapy includes the therapeutic use of the following: medical gases and administration apparatus, environmental control systems, humidification, aerosols, medications, ventilatory support, broncho-pulmonary drainage, pulmonary rehabilitation, cardiopulmonary resuscitation, and airway management. (Courtesy of the American Association for Respiratory Therapy, 1720 Regal Row, Dallas, TX 75235.)

There is a continual need for human diligence in the establishment and maintenance of safe practices for respiratory therapy. It is essential for personnel having responsibility for respiratory therapy to establish and enforce appropriate programs to fulfill provisions of this chapter.

It is the responsibility of the administrative and professional staff of a hospital, or safety director if one is appointed, to adopt and enforce appropriate regulations for a hospital. In other health care facilities, responsibility could be assigned to

Copyright National Fire Protection Association
Provided by IHS under license with NFPA
No reproduction or networking permitted without license from IHS
Not for Resale

a safety director or other responsible person, who is, in turn, responsible to the administration.

In institutions having a respiratory therapy service, it is recommended that this service be directly responsible for the administration of Chapter 9. Hazards can be mitigated only when there is continual recognition and understanding.

A.9.1.3 See Chapter 20.

A.9.3.9 It is particularly important that the intermixing of oxidizing and flammable gases under pressure be scrupulously avoided. Such mixing may result in a violent explosion.

A.9.5.1.1 If the sole source of supply of nonflammable medical gases, such as nitrous oxide and oxygen, is a system of cylinders attached directly to and supported by the device (such as a gas anesthesia apparatus) used to administer these gases, it is recommended that two cylinders of each gas be attached to the administering device.

A.9.5.1.2 The Pin-Index Safety System consists of a combination of two pins projecting from the yoke assembly of the apparatus and so positioned as to fit into matching holes drilled into the cylinder valves. It is intended to provide against the possibility of error in attaching the flush-type valves, with which gas cylinders and other sources of gas supply are equipped, to gas apparatus having yoke connections.

A.9.5.1.4 Fabrication specifications are contained in CGA V-1 (ANSI B57.1), *Standard for Compressed Gas Cylinder Valve Outlet and Inlet Connections*. Connection No. 860 shown in that document illustrates the system. Connection Nos. 870 (Oxygen, Medical), 880 (Oxygen-Carbon Dioxide Mixture), 890 (Oxygen-Helium Mixture), 900 (Ethylene), 910 (Nitrous Oxide), 920 (Cyclopropane), 930 (Helium), and 940 (Carbon Dioxide) are for specific medical gases and gas mixtures and utilize the basic dimensions of Connection 860.

A.9.6.1.1.2 Patients and hospital personnel in the area of administration should be advised of respiratory therapy hazards and regulations.

Visitors should be cautioned of these hazards through the prominent posting of signs *(see 9.4.4)*.

A.9.6.1.1.3 Such toys have been associated with fire incidents in health care facilities.

A suggested text for precautionary signs for oxygen tent canopies and oxygen hoods used in pediatric nursing units is the following:

CAUTION: OXYGEN IN USE
ONLY TOYS APPROVED BY NURSES
MAY BE GIVEN TO CHILD

A.9.6.2.1.1 "Personnel" typically includes physicians, nurses, nursing assistants, respiratory therapists, engineers, technicians, and others.

A.9.6.3.2 Precautionary signs should be at least 21 cm × 28 cm (8 in. × 11 in.) in size.

Any material that can burn in air will burn more rapidly in the presence of oxygen.

Special signs and additional precautionary measures should be employed whenever foreign languages present a communication problem. *(See Figure A.9.6.3.2.)*

Any material that can burn in air will burn more rapidly in the presence of oxygen. No electrical equipment is allowed within an oxygen enclosure or within 1.5 m (5 ft) of it.



FIGURE A.9.6.3.2 A Suggested Minimum Text for Precautionary Signs.

A.9.7.3.1 Use of so-called nonsparking wrenches and tools is not necessary.

A.9.8.7(3) Suction collection bottles that are used as part of patient treatment equipment should be equipped with an overflow shutoff device to prevent carryover of fluids into equipment of the piping system. It is recommended that a separate vacuum trap with shutoff be used between the suction collection bottle and the vacuum system station inlet.

A.9.8.9 The test can be conducted using a rotometer or other flow-measuring device, and a vacuum gauge, where both devices are fitted with the appropriate station inlet connector.

The test procedure will be to measure the flow with the station inlet wide open while simultaneously measuring the vacuum level at an adjacent wall station inlet or other station inlet on the same branch line.

It is recognized that this criterion might not be met by some existing systems. It is the responsibility of facility personnel, based on past experience and use, to determine the acceptable alternate performance criterion for their system(s).

A.10.1 The application of requirements contained in this chapter for specific types of health care facilities can be found in Chapters 13 through 19.

A.10.2 It is the intent that Section 10.2 should not be used by authorities having jurisdiction over health care facilities to limit health care facilities' purchases to patient-care–related electrical appliances meeting these requirements. Rather, it is the intent to encourage equipment manufacturers to conduct the specified tests in order to ensure state-of-the-art electrical safety in their patient-care–related electrical appliances. Similarly, it is not the intent of the Technical Committee to require health care facilities to conduct tests using these manufacturer requirements to verify that their patient-care–related electrical appliances are in conformance with the requirements of this chapter. In this respect, it is the intent of the Committee that health care facilities perform only those tests specified in 8.4.1.

A.10.2.2.1 Hospital grade listing is acceptable but not required.

A.10.2.2.1.1 See Sections 410.56, 410.57, and 410.58 of NFPA 70, *National Electrical Code*.

A.10.2.2.2.1.2 "Hard Service" cord is preferable where the cord can be subject to mechanical abuse. A cord length of 3.1 m (10 ft) is recommended for general locations, and 5.5 m (18 ft) for operating rooms, but can be of a different length if designed for a specific location. See Table 400.4 of NFPA 70, *National Electrical Code*.

A.10.2.2.2.4.1 See Sections 200.2 through 200.10 of NFPA 70, *National Electrical Code*.

Copyright National Fire Protection Association
Provided by IHS under license with NFPA
No reproduction or networking permitted without license from IHS
Not for Resale

A.10.2.2.2.4.2 See Exception No. 2 to Section 210.5(B) of NFPA 70, *National Electrical Code*.

A.10.2.3.2 Size and location are the main criteria used in determining what is not likely to become energized and thus exempted from the bonding and grounding requirements. Items such as screws, nameplates, hinges, metal trim, handles, and other hardware are unlikely to become energized because of their size. If they are sufficiently isolated from internal sources they need not be grounded.

Also, it is unnecessary for exposed conductive surfaces to be grounded separately with individual or looped grounding wires if, by reliable contact or connection with other grounded metal portions (frame), these surfaces can maintain ground.

A.10.2.3.6 It is recommended that a listed overcurrent protective device be used in the power input circuit of all appliances.

A.10.2.4.2 The purpose of these requirements is to prevent interchanging connectors in any manner that permits the inadvertent delivery of a hazardous current to a patient.

A.10.2.5 The design of an appliance intended for life support should minimize the effects on performance of transient, line voltage variations, or other electrical interference. The design of all appliances should minimize the production of line variations and transients.

A.10.2.6.3 Preference should be given to the use of replaceable sealed canisters of chemicals.

A.10.2.7.2 See also NFPA 53, *Recommended Practice on Materials, Equipment, and Systems Used in Oxygen-Enriched Atmospheres*.

A.10.2.9.1.1 This can be accomplished by using a signal transmission system that is isolated from ground or presents a high impedance to ground; that employs a common signal grounding wire between appliances served from the same reference grounding point; that employs an additional grounding path between the common signal grounding wire and reference grounding point in the patient vicinity; or by other means intended to reduce potential differences in the patient care vicinity due to grounding currents to a safe level.

A.10.2.9.2.1 When delivering energy, such appliances can deviate from these requirements only to the extent essential for their intended clinical function. Appliances that intentionally or that could inadvertently apply electrical energy to the patient or to components in contact with the patient require special safety considerations. Since there is a wide range of power levels, output frequencies, and purposes of appliances that apply electricity directly to patients or to patient-connected devices, it is not feasible to cite them in detail.

A.10.2.9.2.2.1 Electrically powered transducers include pressure transducers, flowmeters, endoscopes, and so forth. The electrical energy is not intended to be applied to the patient but to a device that contacts the patient.

A.10.2.9.2.2.3 Assessment of physiologic functions by electric impedance measurements usually requires direct contact with the patient and injection of electric current.

A.10.2.9.2.2.4 Electrotherapeutic devices include devices for electrosleep, electroanesthesia, and electroshock.

A.10.2.9.2.2.5 See Annex D for information on electrosurgical devices.

Electrosurgery uses high levels of continuous or pulsed radio frequency power. It presents some unique hazards. It generates sparks with the attendant ignition hazard. It generates radio frequency interference that could obstruct monitoring. It can cause burns at inadvertent ground return paths if its return circuit is inadequate. Demodulation products could contain components that cause fibrillation or stimulation. DC monitoring currents can cause chemical burns. Capacitive or inductive coupling can occur.

Electrosurgical unit output circuits are commonly designated as isolated or ground-referenced on the basis of their isolation at their operating (RF) frequency. No assumption about isolation at 60 Hz should be made unless the device is specifically labeled as having an "isolated patient circuit (60 Hz)," in which case the device is to conform to the requirements of 10.2.13.5.3.

A.10.2.9.2.2.6 Cardiac defibrillation applies high-voltage, short-duration pulses to the patient.

A.10.2.11 Monitoring of cardiac activity is crucial to effective defibrillation.

A.10.2.12 This subsection is concerned with the patient who has either of two types of direct electrical connections to the heart. The obvious and most hazardous conductor comprises a wire in contact with the heart muscle. This can be a pacemaker electrode, a guide wire, or a transthoracic or implanted electrode. The second type of conductor is a liquid column contained within a nonconductive catheter with the internal end in the heart.

A.10.2.12.1.2 The user is required to have a policy to protect pacing leads with external terminals from potentially hazardous contact with conductive surfaces *(see 8.5.2.1.5)*.

A.10.2.12.2.1 A liquid catheter system can consist of the catheter itself, pressure transducers, electronic appliances, and associated accessories.

A.10.2.12.3 Although contrast injectors are not intended to apply electrical energy to the patient, they could deliver current from the power source and also could generate transient voltages large enough to be hazardous.

A.10.2.13.1 This section describes tests by manufacturers for the safe operation of an appliance. The tests in this subsection are in addition to the design requirements of the entire Section 10.2. Tests that are potentially destructive need only be performed by the manufacturer to ensure design compliance for new appliances.

A.10.2.13.3 For complex leakage current waveforms, a single reading from an appropriate metering system can represent the physiologically effective value of the composite waveform, provided that the contribution of each component to the total reading is weighted in accordance with 8.4.1.3.3 or 10.2.13.3.

This "weighting" can be achieved by a frequency–response-shaping network that precedes a flat-response meter, or by a meter whose own frequency response characteristic matches 8.4.1.3.3 or 10.2.13.3.

If the required performance is obtained by a meter with integral response shaping properties, then that meter should have a constant input resistance of 1000 ohms. (A high-input-impedance meter can be used by shunting a 1000-ohm resistor across the meter's input terminals.)

If, however, the required frequency response is obtained by a network that precedes an otherwise flat-response meter, then the input impedance of the network should be 1000 ohms ± 10 per-

Copyright National Fire Protection Association
Provided by IHS under license with NFPA
No reproduction or networking permitted without license from IHS
Not for Resale

cent, over the frequency range from 0 to 1 MHz, and the frequency response of the network–meter combination should be substantially independent of the impedance of the signal source.

For maximum chassis leakage current allowed (i.e., 300 μA) below 1 kHz, this network will yield the limiting current of 10 mA above 30 kHz.

A suggested input network is shown in Figure A.10.2.13.3.

These currents usually derive from the line power by resistive paths, or capacitive or inductive coupling. However, they also include currents from other sources generated within the appliance and are measured by the tests described in Chapter 10.

These leakage current limits are based on acute events, for example, sensation, duration tetany, or ventricular fibrillation. Appliance design should aim to reduce such current as much as possible. In properly grounded appliances, maximum chassis leakage current is in the grounding conductor and not through the patient.

These tests are not known to be adequate where currents (such as dc or high frequency) are introduced into the patient for long periods and where low-level effects have to be considered. *(See also 8.4.1.3.3.)*

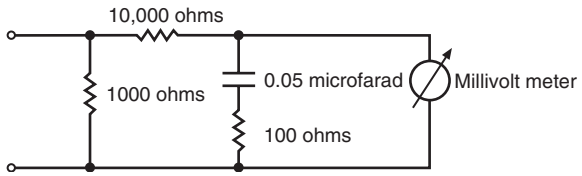

FIGURE A.10.2.13.3 Leakage Current Measurements (1.0 millivolt meter reading corresponds to input current of 1.0 microampere).

A.10.2.13.3.2 The limits for nonsinusoidal periodic, modulated, and transient waveforms remain to be determined.

For complex leakage current waveforms, a single reading from an appropriate metering system can represent the physiologically effective value of the composite waveform, provided that the contribution of each component to the total reading is weighted in accordance with 10.2.13.3.2.

A.10.2.13.4.3 The chassis leakage current limits given in 10.2.13.4.3 and in other paragraphs, combined with the grounding wire requirements, are based on a concept of two layers of protection. Either the limited leakage current or an intact grounding system will provide protection. However, it is generally agreed that not only with medical equipment but also with conventional appliances, there should be two levels of protection. This means that both safeguards will have to fail before the subject is at hazard.

For general application (household appliances) the leakage current limit is generally set at 500 μA at 60 Hz. The limit of 500 μA is based on the work of Dalziel and others that indicates that different individuals in the general population will exhibit responses to electrical shock at differing levels. A small percentage, perhaps 5 percent, will react to a current level of 500 μA with an involuntary movement that could trigger a secondary accident. Some individuals are sensitive to an electric shock sensation as low as 100 μA. A reasonable compromise seems to be to set the limit at 500 for the general public. It should be noted that in 8.4.2.2.1, this is the limit for household-type appliances.

References for this material can be found in Annex G.

For equipment in the patient care vicinity it seems reasonable to reduce this limit to 300 μA, because of the special circumstances involved in hospitals. Some of these factors are as follow:

(1) Some patients could be wet or have some other low-impedance connection to the ground. For this reason, the assumption usually made for the general public that they are moderately insulated from ground is not valid.
(2) Patients are sick, tend to be unresponsive, tend to be obtunded, and might not be able to perform the evasive maneuvers that an alert adult would perform when experiencing an electrical shock.
(3) The nature of the patient's illness could exacerbate the response to electric shock.
(4) Hospital patients are increasingly in close proximity to more and more electrical equipment.
(5) Hospital equipment is subject to industrial-type abuse. It is handled roughly, is sometimes wet, and is sometimes not properly maintained. All of this increases the probability of deterioration and consequent increase in leakage.
(6) The economics of the problem has been considered. The medical appliance industry has responded to the requirement for 300 μA maximum leakage by designing equipment within that limit. It has been shown to be feasible and not unduly uneconomical. In the few cases where, for technical reasons, it is impractical to reach these limits, other solutions are available.
(7) It should be emphasized that the reduced leakage-current limit is not based on clear technical evidence but represents considered opinion. Therefore, if a particular appliance has a leakage current somewhat above 300 μA, it is not implied that it is dangerously unsafe. It does indicate that such an appliance should be examined to determine whether there is a reason for the higher leakage. If the leakage cannot be reduced it can be compensated for by more-intensive preventive maintenance to ensure that the grounding conductor is intact.
(8) It should be further noted that the shock hazards produced by these current levels apply to external contacts; that is, body surface ECG lead or a skin contact with the chassis of an appliance. These current values do not apply to intracardiac leads. For such leads, the hazard is not startle, involuntary muscular motion, or "let-go." It is frank fibrillation of the heart, and is caused at levels a factor of 1000 below those necessary to cause fibrillation by external contacts. It is impractical to provide protection to the patient who has an intracardiac lead by means of the control of chassis leakage current, isolated power systems, ground fault interrupter circuits, or other similar external devices. Protection for such patients can be achieved only by the protection of the intracardiac lead. This is discussed in 8.5.2.1.5. For such patients the limit of such leads has been placed at 10 μA with the ground intact (i.e., under normal conditions). Again there is a safety factor involved. The lower limit of hazardous currents seems to be about 100 μA at 60 Hz. A safety factor of 10 has been established because of most of the reasons just noted and because of the following:
    (a) Patients with intracardiac leads are usually ones whose hearts are already in jeopardy.
    (b) Such patients usually have even more electrical equipment near them than does the average patient.
    (c) It has been shown to be economically quite feasible to maintain such leads at a limit of 10 μA with the ground intact (i.e., under normal conditions).

Copyright National Fire Protection Association
Provided by IHS under license with NFPA
No reproduction or networking permitted without license from IHS
Not for Resale

A.11.1 The application of requirements contained in this chapter for specific types of health care facilities can be found in Chapters 6, 13, 14, 17, and 18.

Some considerations in determining which document (NFPA 99 or NFPA 45) should be consulted first when designing or operating a laboratory in a health care facility (i.e., those laboratories under the jurisdiction of a health care facility as defined in Chapter 3 of NFPA 99) are shown in Table A.11.1 (Table A.1.3.2 in NFPA 45-1996, *Standard on Fire Protection for Laboratories Using Chemicals*, and Sections 1.1 and 11.1 in NFPA 99-2002). Sections 1.1 and 11.1 in NFPA 99–2002 should be reviewed in conjunction with the table.

Table A.11.1 Using NFPA Documents for Laboratories in Health Care Facilities

Location of Laboratory	Primary Reference Document
Laboratory in bldg. with inpatients	99
Laboratory in bldg. with outpatients incapable of self-preservation	99
Laboratory in a bldg. with outpatients capable of self-preservation	45

A.11.1.1 Before a hazardous chemical is ordered, controls should be established to ensure that adequate facilities and procedures are available for receiving, storing, using, and disposing of the material. Information sources include the following:

NFPA 49, *Hazardous Chemicals Data*

NFPA 325, *Guide to Fire Hazard Properties of Flammable Liquids, Gases, and Volatile Solids*

NFPA 491, *Guide to Hazardous Chemical Reactions*

Note that NFPA 49 and NFPA 325 are available in the NFPA publication *Fire Protection Guide to Hazardous Materials*, 12th edition, 1997.

Class IA and IB flammable liquids in glass containers larger than the 1 qt (0.91 L) size should be transported in suitable containers of sufficient size to hold the contents of the glass containers.

A.11.1.3 Although NFPA 45 provides basic requirements and guidance for laboratory design, fire separation and sprinkler requirements are more stringent for laboratories in health care facilities. In addition, NFPA 99 has more stringent and realistic limitations of quantities of flammable liquids in laboratories, requires hood discharge above the roof, allows valves on emergency water supplies, encourages laboratory safety program activities, and recommends placement of flammable gas cylinders outside of the laboratory.

A.11.2.1.1.3 A safety check of the health care facility laboratory by designated laboratory personnel should be made prior to leaving the facility unattended.

A.11.2.1.3.4 Laboratory personnel should be thoroughly indoctrinated in procedures to follow in cases of clothing fires. The single most important instruction, one that should be stressed until it becomes second nature to all personnel, is to immediately drop to the floor and roll. All personnel should recognize that, in case of ignition of another person's clothing, they should immediately knock that person to the floor and roll that person around to smother the flames. Too often a person will panic if his or her clothing ignites and will run, resulting in more severe, often fatal burn injuries.

It should be emphasized that safety showers or fire blankets are of secondary importance. They should be used only when immediately at hand. It should also be recognized that rolling on the floor not only smothers the fire, but also helps to keep flames out of the victim's face and reduce inhalation of smoke.

Improper use of fire blankets can increase the severity of smoke and fire injuries if the blanket funnels smoke towards the face or if the blanket is not removed after the flames have been extinguished.

A.11.2.1.4.3 Interruption of essential services is not required.

A.11.3.1 The types of construction are defined in NFPA 220, *Standard on Types of Building Construction*. Also, for a discussion of fire-resistive construction and fire resistance of building materials and construction assemblies, see the NFPA *Fire Protection Handbook*. For information on the fire resistance, installation, and maintenance of fire doors, see NFPA 80, *Standard for Fire Doors and Fire Windows*.

A.11.3.1.1 NFPA 45 provides basic requirements and guidance for laboratory design, but fire separation and sprinkler requirements are more stringent for laboratories in health care facilities. In addition, NFPA 99 requires hood discharge above the roof, allows valves on emergency water supplies, and has other specific requirements based on the unique nature of facilities for care of patients who might be incapable of self-preservation.

A.11.3.2.1 A door to an adjoining laboratory work area is considered to be a second access to an exit.

A.11.3.4 Subsection 6.4.3 gives ventilation requirements that are specific for laboratories in health care facilities and are in addition to the basic laboratory ventilation requirements contained in Chapter 6 of NFPA 45.

A.11.4.2.1 Tissue processors that operate as a closed system contain ignitible vapor hazards within the processor and thus do not pose a hazard requiring a 1.52 m (5 ft) separation.

A.11.4.2.2 One method of safeguarding unattended processes is to place the equipment in a pan large enough to contain any spilled materials, preferably within a fume hood protected by some form of automatic fire extinguishment or detection.

A.11.5 Examination of laboratory fire records demonstrates the extra vulnerability of premises with substantial amounts of combustible contents. The use of noncombustible shelving, benches, and furniture will reduce production of smoke and damage to facilities, with substantial savings where expensive laboratory equipment is present, even in sprinklered areas.

Self-contained breathing apparatus should be considered for equipping personnel for rescue operations in areas with special fire hazards. Training is required for effective use of such equipment. It is desirable to coordinate equipment and training with local fire department personnel.

A.11.5.1 Where there is a need to reduce equipment damage and facilitate return to service, consideration should be given to an approved gaseous agent total flooding system in laboratories.

The hazard level of a laboratory is considered severe if quantities of flammable, combustible, or hazardous materials are present that are capable of sustaining a fire condition of sufficient magnitude to breach a 1-hour fire separation.

Copyright National Fire Protection Association
Provided by IHS under license with NFPA
No reproduction or networking permitted without license from IHS
Not for Resale

To determine the combustible content or heat potential of flammable or combustible materials capable of breaching or penetrating a 1-hour–rated fire separation, one method is included in the 19th edition of the NFPA *Fire Protection Handbook*, where formulas and tables for calculating the equivalence of time versus fire severity are given. Specific reference is made to Section 12.5, Confinement of Fire in Buildings, and Tables A.1, A.2, and A.3 for heat of combustion (Btu/lb) for materials common to laboratories.

Note that the weights of combustible contents in Tables 12.5.1, 12.5.2, and 12.5.3 are those of ordinary combustible materials taken at 8000 Btu/lb. For converting other than ordinary combustibles to pounds per square foot (psf), divide the total Btu value by 8000/Btu/lb.

The method described, it should be noted, is only one of several methods for calculating the hazard level of a laboratory with regard to combustibles breaching a 1-hour fire separation.

Table A.11.5.1 can be used as a guide in making the determination of the combustible content or heat potential of flammable or combustible materials capable of breaching or penetrating a 1-hour–rated fire separation.

Table A.11.5.1 Guide for Determining Fire Separation Rating

	Hazard	
Wall Rating	**Not Severe**	**Severe**
Less than 1 hour	Automatic fire extinguishing system required	Not allowed
1 hour	No automatic fire extinguishing system required	Automatic fire extinguishing system required
2 hour	No automatic fire extinguishing system required	No automatic fire extinguishing system required

A.11.6 Showers should be controlled by a nonautomatic shut-off device. Although a self-closing shower valve (favored by most designers) would minimize flooding of the building if, for example, the shower were maliciously activated, it does not afford maximum help to the injured user. Since a person would have to use one hand to keep the valve open, efforts to remove clothing or wipe away offending materials would be greatly hampered.

Although emergency showers are rarely used, their use when necessary can mean the difference between superficial burns and serious disfigurement, or loss of life. In some cases where such showers have not been activated for long periods, they have been found inoperative. It is essential that emergency showers be provided and tested from time to time to determine that their valves are in good operating condition. Advance planning needs to be made to handle the water that will flow in a test.

Floor drains in areas of hospitals and other health care facilities are likely to dry out if the floors are not wet-mopped regularly, and dry traps can permit passage of gases, vapors, odors, and vermin. Since a floor drain will be of great value if a safety shower is used, resulting in the release of several hundred gallons of water, it is recommended that floor drains be filled with water regularly, or in new construction that some plumbing be provided to fill the traps manually, automatically, or incidentally by plumbing design.

Another consideration is to be sure that all holes in floor slabs that have not been sealed around pipes to prevent the passage of smoke be so sealed, and in a manner that will prevent water from flowing to lower floors from the discharge of an emergency shower or sprinkler head.

Wall-mounted portable eye wash stations do not contain an adequate supply of water for the 15-minute flushing recommended by chemical manufacturers.

A.11.7.2 Plastic containers are sometimes used to avoid breakage problems posed by glass containers or contamination problems with metal containers. Plastic containers need to be chosen with particular attention to their compatibility with the liquid to be contained. For example, polyethylene containers are generally unsuitable for aldehydes, ketones, esters, higher molecular-weight alcohols, benzene, toluene, various oils, silicone fluids, and halogenated hydrocarbons. In addition to labeling containers for identification of contents, it is important to label plastic containers for identification of their constituent materials to avoid misuse.

In some cases, listed or labeled stainless steel or tin-lined safety containers offer a solution to contamination problems.

A.11.7.2.1 Table A.11.7.2.1 is a portion of Table 4.2.3 in NFPA 30, *Flammable and Combustible Liquids Code*. NFPA 45 provides more specific guidance for use of flammable and combustible liquids in laboratories, in addition to basic requirements set forth in NFPA 30.

Table A.11.7.2.1 Maximum Allowable Size of Containers and Portable Tanks

	Flammable Liquids			Combustible Liquids	
Container Type	**Class IA**	**Class IB**	**Class IC**	**Class II**	**Class III**
Glass	1 pt	1 qt	1 gal	1 gal	5 gal
Metal (other than DOT drums) or approved plastic	1 gal	5 gal	5 gal	5 gal	5 gal
Safety cans	2 gal	5 gal	5 gal	5 gal	5 gal

For SI units: 1 pt = 0.49 L; 1 qt = 0.95 L; 1 gal = 3.8 L.

A.11.7.2.3 The goal is to keep the fuel load to a limit that is as low as is practicable. In no case should excessive amounts be stored. Constant effort needs to be exerted to prevent the overstocking of hazardous chemicals. The laboratory manager can help keep stocks at a safe level by encouraging small and more frequent requisitions, by developing a reliable stock inventory system, by assuring convenient and prompt deliveries from the central stock room, by selecting brands that are the most popular and not necessarily the cheapest, and by discouraging (except perhaps for large-scale research-type projects) the practice of purchasing the largest containers, including bulk supplies in 55 gal (208.2 L) drums.

Copyright National Fire Protection Association
Provided by IHS under license with NFPA
No reproduction or networking permitted without license from IHS
Not for Resale

A.11.7.2.6 *Walk-in Thermal-Controlled Boxes.* Procedures likely to result in toxic or flammable atmospheres should be discouraged within "walk-in" refrigerators or other types of temperature-controlled boxes. A warning sign such as the following should be posted on every box:

DANGER
NOT EXPLOSIONPROOF
NOT VENTILATED
GROUND ALL ELECTRICAL EQUIPMENT
DO NOT STORE DRY ICE

New boxes should include at least the following features:

(1) A latch that can be released by a person inside the box when the door is locked from the outside
(2) Latch and door frames designed to allow actuation under all conditions of freezing
(3) A floor with a nonconductive surface
(4) Neoprene matting to insulate up to 10,000 V
(5) A view-window in the door
(6) An independently circuited high-temperature thermostat and alarm (for warm boxes)
(7) Vaporproof duplex electrical receptacles
(8) An alarm that can be heard throughout the occupied work area and an alarm button at the inside door frame that will keep operating after actuation
(9) Conduits sealed (in cold boxes) in a manner to prevent accumulation of water vapor such as in the globe protectors of the light fixtures
(10) Adjustable exhaust vent and air intake of at least 15 CFM for general ventilation, with provisions for installing a flexible hose and miniature canopy in a manner to provide local ventilation at a specific work site. As explosionproof laboratory apparatus becomes available, it should be substituted for less safe equipment used in enclosed thermal-control boxes.

Non-Walk-in Refrigerators. The use of domestic refrigerators for the storage of typical laboratory solvents presents a significant hazard to the laboratory work area. Refrigerator temperatures are almost universally higher than the flash points of the flammable liquids most often stored in them. In addition to vapor accumulation, a domestic refrigerator contains readily available ignition sources, such as thermostats, light switches, and heater strips, all within or exposing the refrigerated storage compartment. Furthermore, the compressor and its circuits are typically located at the bottom of the unit, where vapors from flammable liquid spills or leaks can easily accumulate.

Explosionproof refrigeration equipment is designed to protect against ignition of flammable vapors both inside and outside the refrigerated storage compartment. This type is intended and recommended for environments such as pilot plants or laboratory work areas where all electrical equipment is required to be explosionproof.

The design concepts of the flammable material storage refrigerators are based on the typical laboratory environment. The primary intent is to eliminate ignition of vapors inside the storage compartment from sources also within the compartment. In addition, flammable material storage refrigerators incorporate such design features as thresholds, self-closing latch doors, friction latches or magnetic door gaskets, and special methods for the inner shell. All of these features are intended to control or limit the loss potential should an exothermic reaction occur within the storage compartment. Finally, the compressor and its circuits and controls are often located at the top of the unit to further reduce the potential for ignition of floor-level vapors. In general, the design features of a commercially available flammable material storage refrigerator are such that they provide several safeguards not available through modification of domestic models.

Every laboratory refrigerator should be clearly labeled to indicate whether or not it is acceptable for storage of flammable materials. Internal laboratory procedures should ensure that laboratory refrigerators are being properly used. The following are examples of labels that can be used on laboratory refrigerators:

DO NOT STORE FLAMMABLE SOLVENTS
in this refrigerator

NOTICE
This is not an "explosionproof" refrigerator, but it has been designed to permit storage of materials producing flammable vapors. Containers should be well stoppered or tightly closed.

A.11.7.5 Because disposal techniques for various hazardous materials produced in hospital research involve complicated problems, they cannot be adequately discussed herein. Such materials include the toxic product of mixing sodium cyanide and acids in the drain system; nuisance or alarming odors such as produced by mercaptans or lutidine; violently water-reactive solids or liquids like phosphoric anhydride and thionyl chloride; potential explosives like picric acid; strong oxidizers like perchloric acid; and radioactive, pathogenic, corrosive, or potentially harmful wastes, such as television picture tubes, syringes, and aerosol cans.

Many chemicals can be disposed of at the bench through the ingenuity of the chemist, such as the reacting of small quantities of potassium with tertiary butyl alcohol.

Flammable and combustible liquids that are miscible with water in all proportions can be flushed down a drain within a laboratory room in quantities not exceeding 1 pt (0.45 L), thoroughly mixed with at least 3 gal (11.4 L) of cold water. This precaution for minimizing flammable vapor concentrations in building drains could be unacceptable to pollution-control authorities.

Vaporization should not be used for routine disposal of liquids.

Drain lines and traps from laboratory benches, safety showers, hood floors, mechanical equipment rooms, storage rooms, and so forth, should have water added at regular intervals to assure that traps will not be the source of flammable or toxic vapor release. Where self-priming traps are provided, an annual inspection for proper operation should be made. Addition of mineral oil or similar liquids is sometimes used to reduce evaporation of water from traps.

A.11.8 Comprehensive discussions of the goals and procedures to provide safe working conditions in clinical laboratories are available from the National Committee for Clinical Laboratory Standards.

A.11.8.1 For adequate laboratory safety, careful maintenance and watchfulness are imperative.

A.11.8.1.1 This individual can be the safety officer for the health care facility or can be a specifically designated laboratory safety officer.

A.11.8.1.2 Regulations should be adopted for routine housekeeping and laboratory cleanup practices.

Copyright National Fire Protection Association
Provided by IHS under license with NFPA
No reproduction or networking permitted without license from IHS
Not for Resale

The laboratory safety officer should make periodic inspections of the laboratory premises to determine that electric cords in use are of adequate conductor size with safe insulation and that circuits are not overloaded through the use of multiple taps.

Several good laboratory safety checklists are available, such as the one developed by the College of American Pathologists Inspection and Accreditation Program *(see Annex G)*. The laboratory safety officer could augment or modify one of these for his or her own facility if he or she so wished.

A.11.8.1.4 Information sources for safe handling, storage, and emergency response to spills or fires in hazardous materials include NFPA 49, *Hazardous Chemicals Data*.

A.11.8.2.1 The identification system of NFPA 704, *Standard System for the Identification of the Hazards of Materials for Emergency Response*, can be used on doors leading to laboratories as well as on doors of approved flammable liquid storage cabinetry and on doors of refrigerators. *(See C.11.2.3.)*

A.11.8.2.3 Examples of severe or unusual hazards that might require signage include, but are not limited to, biohazards, radioactive chemicals, carcinogens, mutagens, teratogens, and high energy lasers.

A.11.10.2.6 The precautions outlined in CGA P-1, *Safe Handling of Compressed Gases in Containers*, and CGA P-2, *Characteristics and Safe Handling of Medical Gases*, should be observed. *(See Annex B.)* These publications cover such items as moving and storage of cylinders, labeling, withdrawing of cylinder contents, and handling of leaking cylinders. Cryogenic fluids are to be used only in containers designed for the purpose, such as a double-walled thermos bottle.

Caps are to be replaced promptly after each use to prevent the solidification of atmospheric water vapor in the pouring neck, which otherwise could convert a safe cylinder into a potential bomb.

Protective clothing and eye shields should be used to prevent burns from issuing gases or spilled liquids. Effects of flammable and oxidizing properties are intense and demand special fire protection measures and handling. Inadvertent saturation of clothing by oxygen or spills on asphalt flooring, for example, require prompt and accurate corrective measures. Ample ventilation is needed to prevent hazardous concentrations, for example, of nitrogen, which could cause asphyxiation. For routine cooling operations, liquid air or oxygen should never be used as substitutes for liquid nitrogen.

A.11.11.2.1 Piping systems supplying medical gases to patients should be reserved exclusively for that purpose so as to protect the patients from administration of gas other than that intended for their use. Therefore laboratory gas piping systems should not be used to pipe gas for use by hospital patients. This warning is also intended to apply to piping systems intended to supply gas to patients within a laboratory facility. Such a system should not be used to supply laboratory equipment other than that directly involved with the patient procedure.

A.11.11.3.2 Any laboratory (such as for analysis, research, or teaching) in a hospital that is used for purposes other than direct support of patient therapy should preferably have its own self-supporting vacuum system, independent of the medical–surgical vacuum system. A small laboratory in patient care areas used in direct support of patient therapy should not be required to be connected directly to the receiver or have fluid traps, scrubbers, and so forth, separate from the rest of the medical–surgical vacuum system.

A.12.1 Such facilities include, but are not limited to, hospitals, clinics, convalescent or nursing homes, and first-aid stations (disaster receiving stations). Such facilities could be formally designated by a government authority as disaster treatment centers. Such facilities would not normally include doctors' or dentists' offices, medical laboratories, or school nurseries, unless such facilities are used for treatment of disaster victims. National bioterrorism preparedness efforts call for the use of schools and other large public facilities to provide facilities for mass immunization.

Table A.12.1 illustrates how the various components of this chapter relate to either the day-to-day emergency management program or the emergency operations plan or EOP.

Table A.12.1 How NFPA 99 Chapter 12 Elements Relate to the Emergency Management Program (EMP) or the Emergency Operations Plan (EOP)

NFPA 99	Chapter 12	EMP	EOP
12.1	Applicability	X	
12.2	Responsibilities		
	12.2.1 Authority Having Jurisdiction	X	
	12.2.2 Senior Management	X	
	12.2.3 Emergency Management Committee	X	
12.3	General Requirements		
	12.3.1 Declaration of Emergency		X
	12.3.2 Activation of Plan		X
	12.3.3 Components		
	12.3.3.1 Personnel Identification		X
	12.3.3.2 Continuity of Essential Systems		X
	12.3.3.3 Staff Management		X
	12.3.3.4 Patient Management		X
	12.3.3.5 Logistics		X
	12.3.3.6 Security		X
	12.3.3.7 Public Affairs		X
	12.3.3.8 Operational Recovery		X
	12.3.3.9 Staff Education	X	
	12.3.3.10 Drills	X	

A.12.1.2 An emergency management program (formerly known as a disaster plan or internal/external plan) encompasses activities across four phases: mitigation, preparedness, response, and recovery. Mitigation activities are those designed to reduce or eliminate the impact of hazards. Preparedness activities include those that build organizational and individual capabilities to deal with disasters. Response activities include all necessary actions to stop ongoing negative effects of a disaster, and recovery activities are those that restore the organization, its employees, and the community back to normal.

The Joint Commission for the Accreditation of Healthcare Organizations (JCAHO) has incorporated Comprehensive Emergency Management as a central theme of its emergency management standards. See Annex G for JCAHO publications.

Copyright National Fire Protection Association
Provided by IHS under license with NFPA
No reproduction or networking permitted without license from IHS
Not for Resale

NFPA 1600, *Standard on Disaster/Emergency Management and Business Continuity Programs*, is an internationally accepted framework for an emergency program. NFPA 99, Chapter 12 recognizes this overall structure and provides additional information useful to health care organizations. Table A.12.1.2 illustrates the relationship between the elements of NFPA 99, Chapter 12 and NFPA 1600.

Table A.12.1.2 How NFPA 99 Chapter 12 Relates to NFPA 1600

NFPA 1600	NFPA 99 Chapter 12
Introduction	
Scope	12.1.1 Applicability
Purpose	12.1.2 Framework
Program Management	
Policy	12.2.1 Authority Having Jurisdiction
Program Coordinator	12.2.2 Senior Management
Program Committee	12.2.3 EM Committee
Program Assessment	12.2.3 EM Committee
Program Elements	
General	—
Laws and Authorities	—
Hazard Identification and Risk Assessment	A.12.3.1 Hazard Identification
Hazard Management (Mitigation)	—
Resource Management	A.12.3.3.5 Resource Assessment
Planning	12.3.3 Emergency Management Plan
Direction, Control, and Coordination	A.12.2.3 Incident Command System
Communications and Warning	A.12.3.3.2(7) Communications
Operations and Procedures	12.3.3.1 Identification of Personnel 12.3.3.2 Continuity of Essential Systems 12.3.3.3 Staff Management 12.3.3.4 Patient Management 12.3.3.6 Security 12.3.3.10 Operational Recovery
Logistics and Facilities	12.3.3.5 Logistics
Training	12.3.3.8 Staff Education
Exercises, Evaluations, and Corrective Actions	12.3.3.9 Drills
Public Education and Information	12.3.3.7 Public Affairs
Finance and Administration	—

A.12.2.1 In time of disaster all persons are subject to certain constraints or authorities not present during normal circumstances. The emergency operations plans written by a health care facility should be reviewed and coordinated with such authorities so as to prevent confusion. Such authorities include, but are not limited to, civil authorities (such as a fire department, police department, public health department, or emergency medical service councils), Centers for Disease Control, Federal Bureau of Investigation, and emergency management or military authorities. See Annex G for publications explaining how the out-of-hospital response is organized to multiple, and mass, casualty incidents.

Further, an authority having jurisdiction can impose upon the senior management of the facility the responsibility for participating in a community emergency management program.

A.12.2.3 The membership of the EMC should include a chairperson, the emergency program coordinator, and representatives from key areas within the organization, such as the administration office, physicians, nursing, infection control, facilities engineering, safety/industrial hygiene, purchasing/fiscal, security, and other critical operating unit managers.

A.12.2.3.1 The emergency management committee should base the entity's program on a hazards vulnerability analysis (HVA). The HVA determines whether the following types of hazards are applicable and the impacts each might have on mission critical systems:

(1) Natural disasters
(2) Technological/industrial disasters
(3) Civil/political disasters

For further information on how to conduct the HVA, see NFPA 1600, *Standard on Disaster/Emergency Management and Business Continuity Programs*, and other publications listed in Annex G. See C.12.3.5 for descriptions of sample protocols for common hazards.

A.12.2.3.2 The incident command system (ICS) (also referred to as the incident management system, or IMS) is a system having an identified chain of command that adapts to any emergency event. The ICS consists of eight key elements: common terminology, integrated communications, modular organization, unified command structure, manageable span of control, consolidated action plans, comprehensive resource management, and predesignated incident facilities. These allow emergency responders from hospitals and all involved organizations to respond to an incident and be familiar with the management concepts and terminology of other responders. It also facilitates the request and processing of mutual aid requests.

A widely accepted structure of an ICS is illustrated in Figure A.12.2.3.2.

A policy group consists of senior managers constituted to provide decisions related to items or incident decisions not in the emergency management program.

The command staff consists of the incident commander and support staff. This support staff consists of the public information officer, liaison officer, and safety officer.

In addition to the command staff, there are four sections, each with a section chief responding directly to the incident commander: plans section, logistics section, operations section, and finance section.

Due to the nature of a health care facility, one deviation from the traditional ICS is made to show a line of medical control. Note the advisory position of the "medical staff officer."

A.12.3.1 In emergency situations that occur without warning and impact the facility, staff at the scene of the problem are expected to follow established protocols to protect life, notify

Copyright National Fire Protection Association
Provided by IHS under license with NFPA
No reproduction or networking permitted without license from IHS
Not for Resale

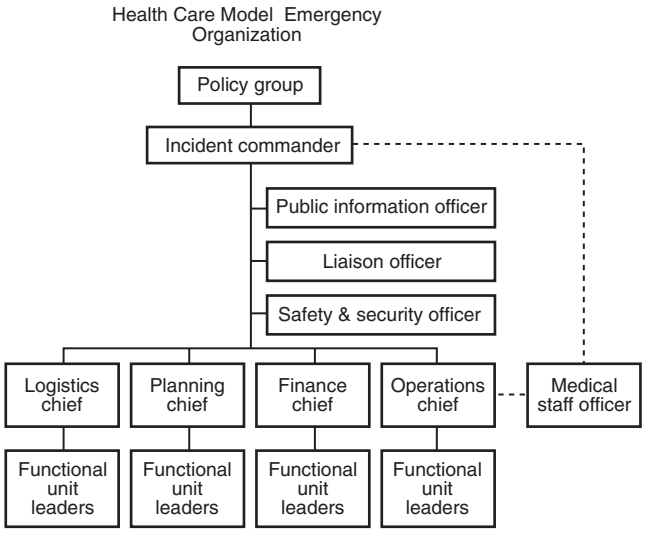

FIGURE A.12.2.3.2 Health Care Model Emergency Organization.

others, and conserve property. Senior management can establish an Incident Command Post (ICP) near the scene, or support one that is established by responding public safety agencies. In emergency situations with warning or whose impacts require extended periods to resolve, senior management report to the facility's Emergency Operations Center (EOC). Not all incidents require an EOC.

Both the ICP and the EOC provide centralized locations for information collection, display, coordination, documentation, and dissemination. When both are established, the ICP focuses on tactical activities currently underway, and the EOC focuses on strategies for the next operational period(s), resource issues, etc.

See Annex G for publications on the Incident Command (Management) System.

A.12.3.2 By basing the planning of health care emergency management on realistic conceptual events, the program reflects those issues or events that are predictable for the environment the organization operates in. Thus, such conceptual planning should focus on issues, such as severe weather typical in that locale; situations that can occur due to close proximity of industrial or transportation complexes; or earthquake possibilities due to local seismic activity. Planning for these events should also focus on the capacity of the health care organization to provide services in such an emergency. Capacity thresholds are different for all facilities, but have to do with issues such as the availability of emergency departments, operating suites and operating beds, as well as logistical response and facility utilities. Planning should also incorporate knowledge available in the disaster research about how individuals, small groups, organizations, communities and societies behave during emergencies and disasters. See Annex G for information sources on disaster research. There is no way to plan for all possible emergencies, but by focusing on logical conceptual events and operating capacity thresholds, the health care organization can develop realistic plans as well as guidelines for staff to activate those plans.

A.12.3.3.1 Where feasible, photo identifications or other means to assure positive identification should be used.

Visitor and crowd control create the problem of distinguishing staff from visitors. Such identification should be issued to all facility personnel, including volunteer personnel who might be utilized in disaster functions.

Note that care should be taken to assure that identification cards are recalled whenever personnel terminate association with the health care facility.

Members of the news media should be asked to wear some means of identification, such as the press card, on their outside garments so that they are readily identifiable by security guards controlling access to the facility or certain areas therein. Clergy also will frequently accompany casualties or arrive later for visitations and require some means of identification.

A.12.3.3.2 For essential building systems, consideration should be given to the installation of exterior building connectors to allow for the attachment of portable emergency utility modules.

Water storage systems should be inventoried and protected to the greatest extent possible.

A.12.3.3.2(1) See Sections 4.4, 4.5, and 4.6 for types of essential electrical systems for health care facilities.

A.12.3.3.2(7) Emergency internal and external communication systems should be established to facilitate communication with security forces and other authorities having jurisdiction as well as internal patient care and service units in the event normal communication methods are rendered inoperative.

The basic form of communication in a disaster is the telephone system. As part of the contingency plan to maintain communication, a plan for restoring telephone systems or using alternate systems is necessary. Typically, the first line of internal defense for a system outage is strategically placed power-failure telephones that are designed to continue to function in the event of system failure. Plans for external outages and load control should include the use of pay phones that have first priority status in external system restoration.

Contingency plans should also contain strategies for the use of radio-frequency communications to supplement landline usage. The plan should include a means to distribute and use two-way radio communication throughout the facility. A plan for the incorporation and use of amateur radio operators should also be considered.

It should be recognized that single-channel radio communication is less desirable than telephone system restoration due to the limited number of messages that can be managed. Cellular telephones, although useful in some disaster situations, should not be considered a contingency having high reliability due to their vulnerability to load control schemes of telephone companies. Portable e-mail devices, satellite telephones and audio- and video-conferencing services are useful tools to link key staff and organizations.

A.12.3.3.3 Management of staff and employees allows for the best and most effective use of the entity's human resources during disaster operations. Consideration should be given to both personnel on-hand and those that can be alerted. Specifically, staff management includes the following:

(1) Assignment of roles and responsibilities
(2) Method for identifying human resource needs to include status of families
(3) Method for recalling personnel and augmenting staff
(4) Management of space (housing, day care, etc.)

Copyright National Fire Protection Association
Provided by IHS under license with NFPA
No reproduction or networking permitted without license from IHS
Not for Resale

(5) Management of staff transportation
(6) Critical incident stress debriefing (Many case histories show that not only victims but also rescuers and treatment/handler staff bear serious emotional or even mental scars from their traumatic experiences. Emergency room and ambulance staff can also benefit from such help when stress has been acute.)

A.12.3.3.4 The plans should focus also on modification or discontinuation of nonessential patient services, control of patient information, and admission/discharge and transfer of patients. Emergency transfer plans need to consider the proper handling of patient personal property and medical records that will accompany the patient as well as assurance of continuity of quality care. Evaluation of space, patient transport resources, and a process to ensure patient location information should be included.

A.12.3.3.5 It will be essential to assess these kinds of resources currently available within the health care facility itself, and within the local community as a whole. Community sources identification can be effectively performed by the local disaster council, through the cooperation of local hospitals individually or collectively through local hospital associations, nursing homes, clinics, and other outpatient facilities, retail pharmacies, wholesale drug suppliers, ambulance services, and local medical–surgical suppliers and their warehouses.

Knowing the location and amount of in-house and locally available medical and other supply sources, a given health care facility could then desire to stockpile such additional critical material and supplies as could be needed to effectively cope with the disaster situation. Stockpiling of emergency supplies in carts should be considered as they facilitate stock rotation of outdated supplies, provide a locally secured environment, and are easily relocated to alternate site locations both within and outside the facility.

See Annex G for information about mutual aid and the Emergency Management Assistance Compact.

A.12.3.3.6 Prior to a disaster, facilities should formally coordinate their security needs with local law enforcement agencies.

The health care institution will find it necessary to share its emergency operations plans with local law enforcement agencies, or better still involve them in the process of planning for security support during disasters. The information should at least include availability of parking for staff, patients, and visitors, and normal vehicular, emergency vehicular, and pedestrian traffic flow patterns in and around the facility. The extent of the security and traffic control problems for any given health care facility will depend upon its geographical location, physical arrangement, availability of visitor parking areas, number of entrances, and so forth.

Crowd Control. Visitors can be expected to increase in number with the severity of the disaster. They should not be allowed to disrupt the disaster functioning of the facility. Ideally, a visitor's reception center should be established away from the main facility itself, particularly in major disasters. Volunteer personnel such as Red Cross, Explorer Scouts, or other helpers can be utilized as liaisons between the visitors and the health care facility itself.

Vehicular Traffic Control. Arrangement for vehicular traffic control into and on the facility premises should be made in the disaster planning period. It will be necessary to direct ambulances and other emergency vehicles carrying casualties to triage areas or the emergency room entrance, and to direct incoming and outgoing vehicles carrying people, supplies, and equipment. Charts showing traffic flow and indicating entrances to be used, evacuation routes to be followed, and so forth, should be prepared and included in the emergency operations plan. Parking arrangements should not be overlooked.

Internal Security and Traffic Control. Internal security and traffic control are best conducted by facility trained personnel, that is, regular health care facility security forces, with reinforcements as necessary. Potential additional assistance from the local law enforcement agencies should be coordinated in the disaster planning phase. Upon activation of the emergency operations plan, security guards should be stationed at all unlocked entrances and exits to the extent possible. Entrance to the facility should be restricted to personnel bearing staff identification cards and to casualties. In the case of major access corridors between key areas of the facility, pedestrian traffic should be restricted to one side of the corridor, keeping one side of the corridor free for movement of casualties. Traffic flow charts for internal traffic should also be prepared in the planning phase, as is the case with external traffic control.

Other Considerations. The following should also be considered:

(1) Notification protocols
(2) Response criteria
(3) Maintaining sensitive areas security
(4) Safeguarding property/equipment
(5) Backup communication
(6) Maintaining critical security systems
(7) Alternate site security
(8) Security to/from evacuated/alternate sites
(9) Security at evacuated facilities

A.12.3.3.7 Because of the intense public interest in disaster casualties, news media representatives should be given as much consideration as the situation will permit. Ideally, news media personnel should be provided with a reception area, with access to telephone communication and, if possible, an expediter who, though not permitted to act as spokesman for news releases, could provide other assistance to these individuals. News media personnel should not be allowed into the health care facility without proper identification. To alert off-duty health care staff and for reassuring the public, use of broadcast media should be planned. Media representatives should be requested to wear some means of identification for security purposes.

A.12.3.3.8 Recovery measures could involve a simple repositioning of staff, equipment, supplies, and information services; or recovery could demand extensive cleanup and repair. It can, under certain circumstances, identify opportunities for structural and nonstructural mitigation efforts. Filing of loss claims might require special approaches.

Health care facilities should have access to cash or negotiable instruments to procure immediately needed supplies.

A.12.3.3.10 Experiences show the importance of drills to rehearse the implementation of all elements of a specific response including the entity's role in the community, space management, staff management, and patient management activities.

To consider an exercise a drill, the following aspects are typically incorporated and documented: a general overview of the scenario, activation of the disaster plan, evaluation of all involved participants/departments, a critique session following the drill, and any identified follow-up training to correct or improve any deficiencies. See Annex G for publications on exercise design, management and evaluation.

--`,,```,,,,````-`-`,,`,,`,`,,`---
Copyright National Fire Protection Association
Provided by IHS under license with NFPA
No reproduction or networking permitted without license from IHS
Not for Resale

A.13.2 It is understood that the individuals who are responsible will vary from one hospital to another, although in most cases the hospital's administration exercises the concomitant authority. It is further recognized that fulfillment of this responsibility frequently occurs by means of delegating appropriate authority to staff, consultants, architects, engineers, and others.

A.13.3.5.1(3)(c) It is the intent to provide a simple, safe piping system for small facilities. Although the number of use points could be a consideration, it was felt that actual gas use is a more accurate indicator of complexity. Applications involving a storage in excess of 85 m^3 (3000 ft^3) would have a complexity warranting installation in accordance with the provisions of Level 1 patient gas distribution systems.

Although the principal intent is to provide simple installations for single treatment facilities, numerous applications exist where a remote use point creates essentially a second treatment facility or where the supply system might be shared by another health care professional such as other dentist, podiatrist, oral surgeon, or general medicine practitioner. The addition of another treatment facility requires incremental safety precautions.

A maximum of two single treatment facilities also approximates the limit with which a 85 m^3 (3000 ft^3) supply system can provide [143 m^3 (5000 ft^3) when liquid oxygen is used].

It is acknowledged that older user analgesia equipment has offered a nitrous oxide lockout device that requires a minimum of 3 L/min oxygen flow. However, a reasonable percentage of older equipment without this safety feature is in daily use. The storage and piping system is based upon the potential use, either initially or subsequently, of one of the older style analgesia equipment in one of the single treatment facilities. The quantity of 85 m^3 (3000 ft^3), or 143 m^3 (5000 ft^3) if liquid oxygen storage, is to be taken as the total combined storage of gases if there is more than one supply system in the single treatment facility.

A.13.3.6 See 13.4.1 for requirements for anesthetizing locations, and 13.3.8.2 and 13.3.11 for requirements for laboratories.

A.13.3.8.1 The requirements of Chapter 8 apply to all electrical appliances. Chapter 8 requirements and procedures are intended to be implemented by the hospital to evaluate existing equipment or to evaluate new equipment as part of routine incoming inspection procedures for all appliances in patient care areas. *(See 8.4.1 and 8.4.2.2.1.)*

A.13.3.8.2 See 8.4.2.2.2 for performance criteria; see 8.5.2.5 for policies.

A.13.3.11 NFPA 45, *Standard on Fire Protection for Laboratories Using Chemicals*, establishes basic requirements for all laboratories using chemicals, but important additional requirements are contained in Chapter 11 and in Chapters 5, 6, and 8.

A.13.4 This is in addition to any applicable requirements in Section 13.3.

A.13.4.1.1.3 In determining whether existing construction or equipment does or does not constitute a hazard to life, due consideration should be given to the record of incidents or accidents of the facility in question and whether equipment used in the facility is subject to documented preventive maintenance. Absence of incidents and accidents, and the existence of a well-documented preventive maintenance program covering all electrical equipment used in anesthetizing locations in the facility, indicates that minimal hazard to life exists.

For example, isolated power systems would not be required in existing anesthetizing locations in health care facilities meeting the above criteria.

The hazards involved in the use of inhalation anesthetic agents can be successfully mitigated only when all of the areas of hazard are fully recognized by all personnel, and when the physical protection provided is complete and is augmented by attention to detail by all personnel of administration and maintenance having any responsibility for the functioning of anesthetizing locations. Since 13.4.1.1 and 13.4.1.2 are expected to be used as a text by those responsible for the mitigation of associated hazards, the requirements set forth herein are frequently accompanied by explanatory text.

Responsibility for the maintenance of safe conditions and practices in anesthetizing locations falls mutually upon the governing body of the hospital, all physicians using the anesthetizing locations, the administration of the hospital, and those responsible for hospital licensing, accrediting, or other approval programs.

A.13.4.1.1.4.2 Use of such hazard symbols is particularly important in the operating suite and in gas and volatile liquid storage facilities.

A.13.4.1.2.2.3 Some tinctures and solutions of disinfecting agents can be flammable, and can be used improperly during surgical procedures. Tipping containers, accidental spillage, and the pouring of excessive amounts of such flammable agents on patients expose them to injury in the event of accidental ignition of the flammable solvent.

A.13.4.1.2.4 Physical safeguards built into the anesthetizing locations or storage areas will not provide protection unless safe practices are followed and good maintenance is provided.

A.13.4.1.2.6.5 For purposes of 13.4.1, anesthetic induction rooms are considered part of the operating room or rooms served by the induction rooms.

A.14.3.5.1(3)(c) It is the intent to provide a simple, safe piping system for small facilities. Although the number of use points could be a consideration, it was felt that actual gas use is a more accurate indicator of complexity. Applications involving a storage in excess of 85 m^3 (3000 ft^3) would have a complexity warranting installation in accordance with the provisions of Level 1 patient gas distribution systems.

Although the principal intent is to provide simple installations for single treatment facilities, numerous applications exist where a remote use point creates essentially a second treatment facility or where the supply system might be shared by another health care professional such as other dentist, podiatrist, oral surgeon, or general medicine practitioner. The addition of another treatment facility requires incremental safety precautions.

A maximum of two single treatment facilities also approximates the limit with which a 85 m^3 (3000 ft^3) supply system can provide [143 m^3 (5000 ft^3) when liquid oxygen is used].

It is acknowledged that older user analgesia equipment has offered a nitrous oxide lockout device that requires a minimum of 3 L/min oxygen flow. However, a reasonable percentage of older equipment without this safety feature is in daily use. The storage and piping system is based upon the potential use, either initially or subsequently, of one of the older style analgesia equipment in one of the single treatment facilities. The quantity of 85 m^3 (3000 ft^3), or 143 m^3 (5000 ft^3) if liquid oxygen storage, is to be taken as the total combined storage of

Copyright National Fire Protection Association
Provided by IHS under license with NFPA
No reproduction or networking permitted without license from IHS
Not for Resale

gases if there is more than one supply system in the single treatment facility.

A.17.3.5.1(3)(c) It is the intent to provide a simple, safe piping system for small facilities. Although the number of use points could be a consideration, it was felt that actual gas use is a more accurate indicator of complexity. Applications involving a storage in excess of 85 m^3 (3000 ft^3) would have a complexity warranting installation in accordance with the provisions of Level 1 patient gas distribution systems.

Although the principal intent is to provide simple installations for single treatment facilities, numerous applications exist where a remote use point creates essentially a second treatment facility or where the supply system might be shared by another health care professional such as other dentist, podiatrist, oral surgeon, or general medicine practitioner. The addition of another treatment facility requires incremental safety precautions.

A maximum of two single treatment facilities also approximates the limit with which a 85 m^3 (3000 ft^3) supply system can provide [143 m^3 (5000 ft^3) when liquid oxygen is used].

It is acknowledged that older user analgesia equipment has offered a nitrous oxide lockout device that requires a minimum of 3 L/min oxygen flow. However, a reasonable percentage of older equipment without this safety feature is in daily use. The storage and piping system is based upon the potential use, either initially or subsequently, of one of the older style analgesia equipment in one of the single treatment facilities. The quantity of 85 m^3 (3000 ft^3), or 143 m^3 (5000 ft^3) if liquid oxygen storage, is to be taken as the total combined storage of gases if there is more than one supply system in the single treatment facility.

A.17.3.11 This is in addition to other nursing home requirements listed in Section 17.3.

A.18.3.5.1(3)(c) It is the intent to provide a simple, safe piping system for small facilities. Although the number of use points could be a consideration, it was felt that actual gas use is a more accurate indicator of complexity. Applications involving a storage in excess of 85 m^3 (3000 ft^3) would have a complexity warranting installation in accordance with the provisions of Level 1 patient gas distribution systems.

Although the principal intent is to provide simple installations for single treatment facilities, numerous applications exist where a remote use point creates essentially a second treatment facility or where the supply system might be shared by another health care professional such as other dentist, podiatrist, oral surgeon, or general medicine practitioner. The addition of another treatment facility requires incremental safety precautions.

A maximum of two single treatment facilities also approximates the limit with which a 85 m^3 (3000 ft^3) supply system can provide ([143 m^3 (5000 ft ^{3}) when liquid oxygen is used].

It is acknowledged that older user analgesia equipment has offered a nitrous oxide lockout device that requires a minimum of 3 L/min oxygen flow. However, a reasonable percentage of older equipment without this safety feature is in daily use. The storage and piping system is based upon the potential use, either initially or subsequently, of one of the older style analgesia equipment in one of the single treatment facilities. The quantity of 85 m^3 (3000 ft^3), or 143 m^3 (5000 ft^3) if liquid oxygen storage, is to be taken as the total combined storage of gases if there is more than one supply system in the single treatment facility.

A.18.3.11 This is in addition to other limited care facility requirements listed in Section 18.3.

A.19.1 As part of the current decentralization of health care modalities, traditionally the province of hospitals, patients are being treated at home using electrical and gas appliances that, if used in a health care facility, would come under the purview of this standard.

A.20.1.4 Chapter 20 does not apply to respiratory therapy employing oxygen-enriched atmospheres at ambient pressures. See Chapter 9.

A.20.1.5.2 Chambers designed for animal experimentation but equipped for access of personnel to care for the animals are classified as Class A for the purpose of Chapter 20.

A.20.2.1.1.1 For guidance on minimum construction requirements, depending on occupancy classification, see NFPA *101*, *Life Safety Code*.

A.20.2.1.1.5 Characteristics of building construction housing hyperbaric chambers and ancillary facilities are no less important to safety from fire hazards than are the characteristics of the hyperbaric chambers themselves. It is conceivable that a fire emergency occurring immediately outside a chamber, given sufficient fuel, could seriously endanger the life or lives of those inside the chamber. Since the service facilities such as compressors, cooling equipment, reserve air supply, oxygen, and so forth, will in all probability be within the same building, these will also need protection while in themselves supplying life-maintaining service to those inside.

A.20.2.1.2.2 In addition to the functions of building protection, the chamber room sprinkler system should be designed to ensure a degree of protection to chamber operators and occupants who likely will not be able to immediately evacuate the premises in the event of a fire.

A.20.2.2.1 Other chapters in NFPA 99 contain many requirements that could appear to relate to hyperbaric facilities but could be inappropriate. The requirements of other chapters in NFPA 99 should be applied to hyperbaric facilities only where specifically invoked by this chapter.

A.20.2.2.5.2 Many commercial sound-deadening materials that might be flame resistant are porous and will absorb water from activation of the fire-suppression system and retain odor. Metallic panels that contain a large quantity of small holes or are made of wire mesh and are installed about 1 in. (2.5 cm) away from the chamber wall can be used to form an acoustic baffle. These panels should be made from corrosive-resistant materials such as stainless steel or aluminum and can be painted in accordance with 20.2.2.5.1.

A.20.2.2.6 Prudent design considerations suggest that at least 50 percent excess pass-through capacity be provided, for future use, given the difficulty of adding pass-throughs to the chamber after it is constructed and tested.

A.20.2.4.1.2 Experience and practice can dictate the need for a threshold ventilation rate in excess of the minimum specified for sanitary reasons. It is recommended that consideration be given, if necessary, to the use of odor filters in the chamber circulation system as a means of keeping sanitary ventilation rate requirements to a minimum.

A.20.2.4.2.1 If intakes are located where it could be possible for maintenance to be conducted in the immediate vicinity, a warning sign should be posted.

Copyright National Fire Protection Association
Provided by IHS under license with NFPA
No reproduction or networking permitted without license from IHS
Not for Resale

A.20.2.4.3.2 Subsection 13.4.1 specifies a desirable temperature of 20°C (68°F). It is impractical to maintain such a temperature during pressurization, but efforts should be made in the design and operation of thermal control systems to maintain the temperature as close to 22°C (75°F) as possible. The air-handling system of all Class A chambers should be capable of maintaining relative humidity in the range of 50 to 70 percent during stable depth operations.

The thermal control system should be designed to maintain the temperature below 29°C (85°F) during pressurization, if possible, and above 19°C (65°F) during depressurization, if possible.

A.20.2.4.4.1 Ventilation can be provided by closed or open circuit systems.

A.20.2.4.5.3 The intent of this requirement is to allow facility staff to evacuate the facility and avoid breathing contaminated air. This requirement can be met using either a self-contained breathing apparatus, smoke hood with integral filter/air supply, or similar technology.

The number of units available should be adequate to meet facility staffing.

The breathing duration of the personal protection devices should be predicated upon the time necessary for evacuation of the facility.

Facility evacuation time should be determined during fire drills conducted by the hyperbaric facility.

A.20.2.5.1.4 This requirement does not preclude the use of an alarm system affording direct fire department contact.

A.20.2.5.1.5 Experience has shown that fire blankets, portable carbon dioxide extinguishers, and other methodology intended to "snuff out" fires by excluding air are not effective in controlling fires in oxygen-enriched atmospheres. Valuable time can be lost in attempting to use such devices.

A.20.2.5.2.4 More than one control station could be required in a compartment (lock) depending on its size.

A.20.2.5.2.6 Experience has shown that when water is discharged through conventional sprinkler heads into a hyperbaric atmosphere, the spray angle is reduced because of increased resistance to water droplet movement in the denser atmosphere. This is so even though the water pressure differential is maintained above chamber pressure. Therefore, it is necessary to compensate by increasing the number of sprinkler heads. It is recommended that spray coverage tests be conducted at maximum chamber pressure.

Some chamber configurations, such as small-diameter horizontal cylinders, could have a very tiny "floor," or even no floor at all. For horizontal cylinder chambers and spherical chambers, "floor level" should be taken to mean the level at ¼ diameter below the chamber centerline or actual "floor level," whichever gives the larger floor area.

A.20.2.5.4.2 Additional detectors are recommended to avoid "blind" areas if the chamber contains compartmentation.

A.20.2.5.5 The primary focus for the semiannual test of a water-based extinguishing system is to ensure water flow through the system (i.e., inspector's test). Other vitally important benefits are the activation of water flow devices, alarm appliances, and notification and annunciator systems.

A.20.2.7.1.4.1 It is recommended that system design be such that electric motors not be located inside the chamber.

A.20.2.7.3 This subsection contains requirements for the safe use of electrical equipment in the hyperbaric, oxygen-enriched environment of the Class A chamber.

A.20.2.7.3.10 It should be recognized that interruption of any powered circuit, even of very low voltage, could produce a spark sufficient to ignite a flammable agent.

A.20.2.7.3.11.1 It is recommended that all control switching functions inside the chamber be accomplished using intrinsically safe circuits that control power and control circuits located outside of the chamber.

A.20.2.7.3.12 It is the intention of this paragraph that equipment used in the chamber be incapable of igniting, by heating, any material or fabric that could come into contact with the surface of the equipment.

A.20.2.7.3.15 It is strongly recommended that high-intensity local task lighting be accomplished using through-hull fiber optic lights. Many high-intensity lights will not meet the temperature requirements specified in this subparagraph.

A.20.2.7.3.16.1 The requirement for isolation from mains supply in (1) is not the same as the requirement in 20.2.7.4.2 that circuits supplying power to portable utilization equipment inside the chamber be isolated, monitored, and alarmed.

It is recommended that intrinsically safe sensors and controls be used whenever possible.

A.20.2.7.3.17 These requirements are only the minimum requirements for electrical safety. There are many other safety concerns that should be addressed on a case-by-case basis. Meeting the requirements of this subparagraph does not indicate that proper device performance will occur in the hyperbaric environment, and that the device will be safe for use with patients.

A.20.2.7.5.2 It is necessary that these circuits be protected from exposure to water from the room sprinkler system protecting the chamber housing in the event of a fire in the vicinity of the chamber while it is in operation.

A.20.2.8.2 Intercommunications equipment is mandatory for safe operation of a hyperbaric facility.

A.20.2.8.2.1 It is recommended that multiple compartment (lock) Class A chambers be equipped with multiple channel systems, and that, in addition, a sound-powered telephone or surveillance microphone be furnished.

A.20.2.8.6 The purity of the various gas supplies should be assured. It is recommended that air be sampled at the air intake location at times when the intake air is likely to have maximum impurities (e.g., when vehicles or stationary engines upwind of the intake are running).

A purity statement for any cryogenic or high pressure cylinder gas should be supplied by the vendor.

Gas cylinder purity statements should be cross referenced, where possible, with the delivered gas.

For additional verification, some facilities have installed sampling ports for monitoring oxygen and other gases.

A.20.2.8.6.2 CGA Grade D permits quantities of hydrocarbons and water in air. In piping systems where air and oxygen might be used interchangeably, hydrocarbon buildup can occur and increase the risk of fire when oxygen is used. There is also a concern about pneumatic components being fouled and functionally impaired by hydrocarbons or water from compressed air. Ideally, there should be no condensed hydrocarbons in an oxygen system and no liquid water in pneumatic control systems.

Copyright National Fire Protection Association
Provided by IHS under license with NFPA
No reproduction or networking permitted without license from IHS
Not for Resale

A.20.2.8.7 The frequency of such monitoring should depend on the location of the air intake relative to potential sources of contamination.

A.20.2.8.8 It is recommended that information about the status of an anesthetized or otherwise monitored patient be transmitted to the inside chamber attendants via the intercommunications system. As an alternative, the monitor indicators can be placed adjacent to a chamber viewport (or viewports) for direct observation by inside personnel.

A.20.3.1.2 The hazards involved in the use of hyperbaric facilities can be mitigated successfully only when all of the areas of hazard are fully recognized by all personnel and when the physical protection provided is complete and is augmented by attention to detail by all personnel of administration and maintenance having any responsibility for the functioning of the hyperbaric facility. Since Section 20.3 is expected to be used as a text by those responsible for the mitigation of hazards of hyperbaric facilities, the requirements set forth are frequently accompanied by explanatory text.

A.20.3.1.3.2 The complexity of hyperbaric chambers is such that one person should be designated chamber operator, such as one in a position of responsible authority. Before starting a hyperbaric run, this person should acknowledge, in writing, in an appropriate log, the purpose of the run or test, duties of all personnel involved, and a statement that he or she is satisfied with the condition of all equipment. Exceptions should be itemized in the statement.

Safety, operational, and maintenance criteria of other organizations are published, for example, in the Undersea & Hyperbaric Medical Society Safety Committee documents and the Compressed Gas Association pamphlets, and should be reviewed by the safety director. The safety director should serve on the health care facility safety committee.

Due to a conflict of responsibility, the same individual should not serve as both Medical Director and Safety Director.

A.20.3.1.3.3 It is incumbent upon the governing body to insist that rules and regulations with respect to practices and conduct in hyperbaric facilities, including qualifications and training of hyperbaric personnel, be adopted by the medical or administrative staff of the institution, and that regulations for inspection and maintenance are in use by the administrative, maintenance, and ancillary (and in the case of a hospital, nursing and other professional) personnel.

In meeting its responsibilities for safe practices in hyperbaric facilities, the administration of the facility should adopt or correlate regulations and standard operating procedures to ensure that both the physical qualities and the operating maintenance methods pertaining to hyperbaric facilities meet the standards set in Chapter 20. The controls adopted should cover the conduct of personnel in and around hyperbaric facilities and the apparel and footwear allowed. They should cover periodic inspection of static-dissipating materials and of all electrical equipment, including testing of ground contact indicators.

A.20.3.1.3.4 It is recommended that training of hyperbaric chamber personnel be closely monitored, following the guidelines and publications of the Undersea & Hyperbaric Medical Society, Baromedical Nurses Association, and the National Board of Diving and Hyperbaric Medical Technology.

A.20.3.1.3.5 In the case of a hyperbaric facility located in a hospital, hospital licensing and other approval bodies, in meeting their responsibilities to the public, should include in their inspections not only compliance with requirements for physical installations in hyperbaric facilities, but also compliance with the requirements set forth in Section 20.3.

A.20.3.1.4.1 It is recommended that all personnel, including trainees and those involved in the operation and maintenance of hyperbaric facilities, and including professional personnel and (in the case of hospitals) others involved in the direct care of patients undergoing hyperbaric therapy, be familiar with Chapter 20. Personnel concerned should maintain proficiency in the matters of life and fire safety by periodic review of this chapter, as well as any other pertinent material.

Positive measures are necessary to acquaint all personnel with the rules and regulations established and to assure enforcement. Training and discipline are necessary.

A.20.3.1.4.4.1 All full and part-time personnel should receive training in emergency management appropriate to their job description.

A.20.3.1.4.5 A calm reaction (without panic) to an emergency situation can be expected only if the recommendations are familiar to and rehearsed by all concerned.

A.20.3.1.4.6 A suggested outline for emergency action in the case of fire is contained in C.20.2.

A.20.3.1.5.1 The immediate vicinity of the chamber is defined as the area around the chamber from which activation of the flame detector can occur. Flame detectors can be prematurely activated by certain radiation sources.

A.20.3.1.5.2.2(2) Allowable quantities for (2) can be determined from the chamber volume, flammable agent vapor density, and lower explosive limit (LEL). Experience has shown that increased pressure has little effect on LEL for a given flammable gas and oxygen concentration. A safety factor of 10 is recommended. Flammable liquids should be confined to nonbreakable, nonspill containers.

Sample Determination. Example of Limiting Quantity of Flammable Agent Substance: Isopropyl alcohol (2-propanol)

LEL = 2%/vol. (irrespective of chamber pressure)

Vapor density = 2.1 relative to air

Liquid density = 786 g/L

Air density = 0.075 lb/ft^3 at STP

The limiting case occurs at the lowest ambient pressure, that is, 1 atmosphere:

$$\begin{aligned}\text{Alcohol vapor density at LEL} &= 0.02 \times 2.1 \times 0.075 \\ &= 0.00315 \text{ lb/ft}^3 \\ &= 1.43 \text{ g/ft}^3\end{aligned}$$

For a relatively small 500 ft^3 chamber, this implies:

$1.43 \times 500 = 715$ g alcohol vapor at LEL

Using a safety factor of 10 to account for uneven vapor concentrations gives 71.5 g = 91 ml alcohol.

One could conclude that even 90 ml of alcohol is more than would be needed for almost any medical procedure. The above calculation also does not account for the mitigating effect of ventilation.

Many "inert" halogenated compounds have been found to act explosively in the presence of metals, even under normal atmospheric conditions, despite the fact that the halogen compound itself does not ignite in oxygen, or, in the case of solids such as polytetrafluoroethylene, is self-extinguishing.

Copyright National Fire Protection Association
Provided by IHS under license with NFPA
No reproduction or networking permitted without license from IHS
Not for Resale

Apparently these materials are strong oxidizers whether as gases, liquids (solvents, greases), or solids (electrical insulation, fabric, or coatings). Some halogenated hydrocarbons that will not burn in the presence of low-pressure oxygen will ignite and continue to burn in high-pressure oxygen. Customarily, Class A chambers maintain internal oxygen concentration that does not exceed 23.5 percent.

Parts of this chapter deal with the elements required to be incorporated into the structure of the chamber to reduce the possibility of electrostatic spark discharges, which are a possible cause of ignition in hyperbaric atmospheres. The elimination of static charges is dependent on the vigilance of administrative activities in materials, purchase, maintenance supervision, and periodic inspection and testing. It cannot be emphasized too strongly that an incomplete chain of precautions generally will increase the electrostatic hazard. For example, conductive flooring can contribute to the hazard unless all personnel wear conductive shoes, all objects in the room are electrically continuous with the floor, and humidity is maintained.

The limitations on the use in the chamber of alcohol and other agents that emit flammable vapors in 20.3.1.5.2.2 should be strictly observed and such restrictions should be prominently posted.

A.20.3.1.5.3 The number of occupants of the chamber should be kept to the minimum number necessary to carry out the procedure.

A.20.3.1.5.4 It is recommended that all chamber personnel should wear garments of the overall or jumpsuit type, completely covering all skin areas possible, and as tightfitting as possible. It can be impractical to clothe some patients (depending upon their disease or the site of any operation) in such garments. Hospital gowns of flame-resistant textile should be employed in such a case.

A.20.3.2.1.6 The use of paper should be kept to an absolute minimum in hyperbaric chambers.

A.20.3.2.2 Users should be aware that many items if ignited in pressurized oxygen-enriched atmospheres are not self-extinguishing. Iron alloys, aluminum, and stainless steel are, to various degrees, in that category as well as human skin, muscle, and fat, and plastic tubing such as polyvinyl chloride (Tygon®). Testing for oxygen compatibility is very complicated. Very little data exist and many standards still have to be determined. Suppliers do not normally have facilities for testing their products in controlled atmospheres, especially high-pressure oxygen. Both static conditions and impact conditions are applicable. Self-ignition temperatures normally are unknown in special atmospheres.

A.20.3.2.5 See A.20.3.2.2.

A.20.3.2.6 Radiation equipment, whether infrared or roentgen ray, can make hyperbaric chambers even more hazardous.

A.20.3.3.4 Quantities of oxygen stored in the chamber should be kept to a minimum.

A.20.3.6 The elimination of static charges is dependent on the vigilance of administrative supervision of materials purchased, maintenance, and periodic inspection and testing.

A.20.3.6.2.1 The requirements of E.6.6.8 apply.

A.20.3.6.2.2.1 Ferrous metals can cause such sparking, as can magnesium or magnesium alloys if contact is made with rusted steel.

A.20.3.6.2.3 Conductive accessories can include belting, rubber accessories, plastics, covers, and sheeting. For more information see E.6.6.8, Reduction in Electrostatic Hazard, in Annex E.

A.20.3.6.2.4 Materials containing rubber deteriorate rapidly in oxygen-enriched atmospheres.

A.20.3.6.4 It is absolutely essential that all areas of, and components associated with, the hyperbaric chamber be kept meticulously free of grease, lint, dirt, and dust.

Annex B Nature of Hazards

This annex is not a part of the requirements of this NFPA document but is included for informational purposes only.

B.1 Electrical Systems Hazards. The hazards attendant to the use of electricity include electrical shock, thermal injury, and interruption of power.

B.1.1 Fire and Explosions. Electrical systems can be subject to the occurrence of electrical fires. Grounding systems, overcurrent protective devices, and other subjects discussed in this standard could be intended for fire prevention as well as other purposes. This aspect of electrical systems is the primary focus of other NFPA standards and will not be emphasized herein.

B.1.2 Shock.

B.1.2.1 General. The major concern in this chapter is electric shock resulting from degradation or some type of failure within normally safe electrical appliances or the facility's electrical distribution system. The defect could be in the wiring, in a component, or the result of deteriorating insulation. The failure could be caused by mechanical abuse or by improper use of the equipment.

Hospital service presents unusually severe environmental stress to equipment, similar to hard industrial use. Appliances are frequently subjected to large mechanical stresses in the course of being transported around the facility. Patients and staff, particularly those in operating rooms, critical care areas, clinical laboratories and some physical therapy areas, are frequently surrounded by exposed, electrically grounded conductive surfaces that increase the risk of serious injury in the event of certain types of electrical failure.

Electricity passing through the body can stimulate excitable tissue, causing pain, involuntary muscle contractions, convulsions, or ventricular fibrillation. Also, electricity can cause tissue necrosis due to heat, chemical imbalance, or arcing. The effect of electricity depends upon the applied voltage, the magnitude of the current, the duration of application, whether the current is direct or alternating, the frequency of the current, and the size and location of the electrodes at which the current enters and leaves the body. The conductivity and dielectric strength of the skin is often a factor in determining the outcome of contact with electrified conductors.

Electrocution resulting from contact with equipment connected to ordinary branch circuit (i.e., less than 250 V at about 60 Hz) is usually a consequence of sustained ventricular fibrillation. When applied directly to the heart, voltages of less than 100 mV rms, 60 Hz can cause sustained ventricular fibrillation and death.

B.1.2.2 Control. Control of electric shock hazard requires the limitation of electric current that might flow in an electric circuit involving the patient's body and is accomplished through a variety of alternative approaches.

--`,,```,,,,````-`-`,,`,,`,`,,`---

Copyright National Fire Protection Association
Provided by IHS under license with NFPA
No reproduction or networking permitted without license from IHS
Not for Resale

B.1.2.2.1 Shock Prevention. See Figure B.1.2.2.1(a). Since electric shock results from the effect of an electric current flowing through a part of the human body, the following three conditions should be satisfied simultaneously before a patient or staff member can be shocked:

(1) One part of the body in contact with a conductive surface (Point 1)
(2) A different part of the same body in contact with a second conductive surface (Point 2)
(3) A voltage source that will drive current through the body between those two points of contact (Point 3)

In the general case, six or seven independent and separable factors should combine simultaneously to satisfy these three conditions. *[See Figure B.1.2.2.1(b).]*

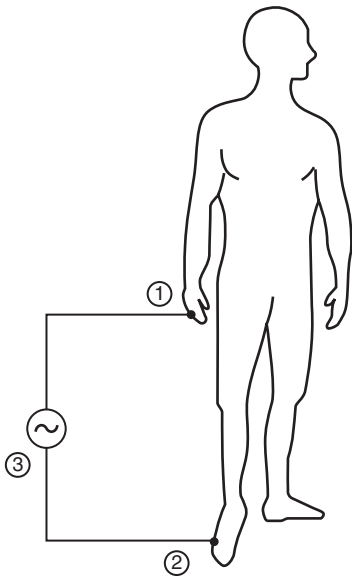

FIGURE B.1.2.2.1(a) The Three Basic Conditions Required to Produce an Electric Shock.

Several separate factors should be analyzed when evaluating a potential electric shock hazard. The following numbers refer to points in Figure B.1.2.2.1(b):

(1) The likelihood that a piece of line-powered equipment will be within reach of the patient
(2) The possibility of direct exposure of a "live" 110-V conductor through a damaged line cord or attachment plug. The likelihood that the equipment will have exposed metal parts that through some reasonably credible accident could become "live"
(3) The likelihood that equipment is accidentally damaged or malfunctions in some way and the metal becomes "live," that is, electrified
(4) The likelihood of the exposed metal parts not being grounded or accidentally becoming ungrounded
(5) The likelihood that the patient (or member of staff, or visitor) will make good contact with this exposed, potentially live surface
(6) The likelihood that a second exposed conductive surface that is, or that could through a reasonably credible event become, grounded is also within reach

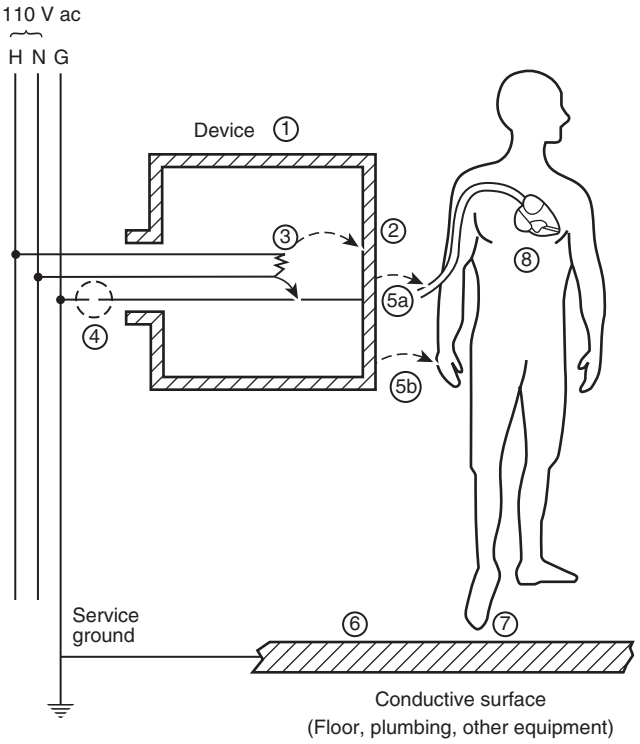

FIGURE B.1.2.2.1(b) General Factors That Should Be Considered When Analyzing Electrical Safety.

(7) The likelihood that the patient (or member of staff, or visitor) will make good contact with this grounded, or potentially grounded, surface
(8) The probability that the resultant current flow will be sufficient to cause an injury

The chance of a patient actually sustaining an electric shock is a product of the likelihood that each of the events in (1) through (8) will occur. If the likelihood of occurrence of any one event is very close to zero, then the risk of electric shock will be very close to zero. Put another way, six or seven links in a chain need to be intact in order for a shock to be sustained. If any one link can be made extremely weak, by design or operating procedure, the chance of receiving a shock will be minimal.

Working to minimize the occurrence of one factor (i.e., one safety factor) can achieve one layer of protection. A second layer of protection is achieved by working to make the chance of occurrence of a second factor in the overall chain also very close to zero. However, extending this process to minimize the occurrence of all factors can lead to overdesign, overspecification, and less than cost-effective utilization of resources to control any problem.

Consider briefly each of the component factors. First, more could be done operationally to ensure that the minimum amount of line-powered equipment is within reach of the patient. Second, equipment that does not have a significant amount of exposed metal is to be preferred. Third, the staff should be instructed to report all obviously damaged equipment, even if it is still functional. Fourth, all grounding circuits should be tested frequently. Fifth, minimize the amount of grounded metal that is within reach of the patient. Avoid when possible attaching any grounded leads directly to the patient. Do not de-

Copyright National Fire Protection Association
Provided by IHS under license with NFPA
No reproduction or networking permitted without license from IHS
Not for Resale

liberately ground any metal part, such as a curtain rail or a metal cabinet, that cannot become accidentally "live." Insulate the patient from ground as much as possible.

In consideration of these objectives, four basic principles can be examined to avoid electric shock:

(1) Shock prevention by insulating and enclosing
(2) Shock prevention by grounding
(3) Shock prevention by device design
(4) Shock prevention through user procedures

B.1.2.2.2 Shock Prevention by Insulation and Enclosure. Physical provisions should be made to prevent personal hazardous contact between energized conductors or between an energized conductor and ground.

B.1.2.2.2.1 Noninsulated current-carrying conductors, which could produce hazardous currents, should be protected from contact through suitable enclosure.

B.1.2.2.2.2 Energized conductors, which could produce hazardous currents when not in protective enclosures, should be insulated by materials suitable to the voltage and environment.

In order to minimize the probability of completing a hazardous circuit, exposed conductive surfaces not likely to be energized from internal sources should not be intentionally grounded. Insulated covering of such surfaces is desirable.

Note that past measures recommended by earlier editions of NFPA standards and other standards associated with equipotential grounding and bonding of "dead metal" served to increase the likelihood that a patient or staff member would complete an undesirable pathway for electric shock.

Also note that this principle does not intend to mandate construction of an insulated environment, but rather to avoid intentional grounding of otherwise dead metal surfaces.

B.1.2.2.3 Shock Prevention by Grounding. A grounding system for fault currents should be supplied for two reasons: to minimize the fraction of the fault current that might flow through an individual during the fault condition and to operate overcurrent devices in order to minimize the possibility of damage and fire. This grounding system should also be utilized to provide a safe path for leakage currents.

B.1.2.2.3.1 Unless doubly insulated, each line-powered electrical appliance within the patient care vicinity should have a grounding wire, which normally carries the leakage current directly to ground, in the same power cable as the energized conductors.

B.1.2.2.3.2 Each receptacle for line-powered electrical appliances should provide a low-impedance grounding connection and path.

B.1.2.2.4 Shock Prevention by Device Design. Leakage current should be minimized. New device designs should not intentionally provide a low-impedance path at 60 Hz from patient to ground.

B.1.2.2.5 Shock Prevention Through User Procedures. A total electrical safety program incorporates the best features of design, manufacture, inspection, maintenance, and operation. The design should be such that limited departures from ideal conditions of maintenance and use will not cause unreasonable risks.

Where existing equipment that does not meet new-equipment requirements is to be used, such use is permissible if procedures of use and maintenance can establish an equivalent level of safety.

User procedures should include the establishment of the following:

(1) A policy to prohibit the connection of nonisolated input equipment to externalized intracardiac electrodes
(2) User educational and training programs
(3) A testing and routine maintenance program

B.1.3 Thermal. (Reserved)

B.1.4 Interruption of Power.

B.1.4.1 General. Medical and nursing sciences are becoming progressively more dependent on electrical apparatus for the preservation of life of hospitalized patients. For example, year by year more cardiac operations are performed, in some of which the patient's life depends on artificial circulation of the blood. In other operations, life is sustained by means of electrical impulses that stimulate and regulate heart action. In still others, suction developed by electrical means is routinely relied on to remove body fluids and mucus that might otherwise cause suffocation. In another sense, lighting is needed in strategic areas in order that precise procedures can be carried out, and power is needed to safeguard such vital services as refrigerated stores held in tissue, bone, and blood banks.

Interruption of normal electrical service in health care facilities can be caused by catastrophes such as storms, floods, fires, earthquakes, or explosions; by failures of the systems supplying electrical power; or by incidents within the facility. For all such situations, electrical systems should be planned to limit internal disruption and to provide for continuity of vital services at all times. Outages might be corrected in seconds or might require hours for correction. This indicates that the system or protection needs to be designed to cope with the longest probable outage.

Selecting vital areas and functions considered to be essential, designing safeguards to ensure continuity in these circuits, and maintaining the electrical and mechanical components of such essential services so that they will work when called on are complex problems that warrant standardized guidance for regulating agencies, governing boards, and administrators of health care facilities and architects and engineers concerned with their construction. Such guidance is offered in Chapter 4.

Chapter 4 is predicated on the basic principle of achieving dependability. It is intended to recognize the different degrees of reliability that can result from varying approaches to electrical design. Therefore, its requirements have been developed to allow the designer the flexibility needed to achieve a reliable electrical system.

B.1.4.2 Need to Maintain Power. Interruption of the supply of electric power in a facility can be a hazard. Implementation of the requirements of Chapter 4 serves to maintain the required level of continuity and quality of electrical power for patient care electrical appliances.

B.1.5 RF Interference. See Annex D.

B.2 Gas and Vacuum System Hazards.

B.2.1 Gas Systems. Oxygen and nitrous oxide, the gases normally used for relative analgesia and as components of general anesthesia, are strong oxidizing gases, and individually or as a mixture, support combustion quite readily.

Inhalation gases or vapors introduce fire, chemical, mechanical, and electrical hazards that are all interrelated. Any mixture of inhalation gases will support combustion. In an

--`,,```,,,,````-`-`,,`,,`,`,,`---
Copyright National Fire Protection Association
Provided by IHS under license with NFPA
No reproduction or networking permitted without license from IHS
Not for Resale

oxygen-enriched atmosphere, materials that are flammable and combustible in air ignite more easily and burn more vigorously. Combustible materials that could be found near patients who are to receive respiratory therapy include hair oils, oil-based lubricants, skin lotions, facial tissues, clothing, bed linen, tent canopies, rubber and plastic articles, gas supply and suction tubing, ether, alcohols, and acetone.

A particular hazard exists when oxygen or nitrous oxide equipment becomes contaminated with oil, grease, or other combustible materials. Such contaminants will ignite readily and burn more rapidly in the presence of high oxygen concentrations and make it easier to ignite less combustible materials with which they come in contact.

Any mixture of breathing gases used in respiratory therapy will support combustion. In an oxygen-enriched atmosphere, materials that are combustible and flammable in air ignite more easily and burn more vigorously. Materials not normally considered to be combustible can be so in an oxygen-enriched atmosphere.

An oxygen-enriched atmosphere normally exists in an oxygen tent, croup tent, incubator, and similar devices when supplemental oxygen is being employed in them. These devices are designed to maintain a concentration of oxygen higher than that found in the atmosphere.

A hazard exists if either oxygen or nitrous oxide leaks into a closed space, creating an oxygen-enriched atmosphere.

Oxygen-enriched atmospheres can exist in the immediate vicinity of all oxygen administration equipment. *(See Chapter 3 for the definition of Site of Intentional Expulsion.)*

The transfer of liquid oxygen from one container to another container can create an oxygen-enriched atmosphere within the vicinity of the containers. If oxygen is supplied by a container that stores the oxygen as a liquid, there will be a small amount of oxygen vented into the vicinity of the container after a period of nonuse of the equipment. Larger amounts of oxygen will be vented if the container is accidentally tipped over or placed on its side. This venting can create an oxygen-enriched atmosphere if the container is stored in a confined space.

A hazard exists if improper components are employed to connect equipment containing pressurized oxygen or nitrous oxide during respiratory therapy administration.

The occurrence of a fire requires the presence of combustible or flammable materials, an atmosphere of oxygen or other oxidizing agents, and a source of ignition. Combustible materials can be unavoidably present when oxygen is being administered, but flammable liquids and gases and ignition sources are avoidable.

Sources of ignition include not only the usual ones in ordinary atmospheres, but others that become significant hazards in oxygen-enriched atmospheres such as the following:

(1) Open flames, burning tobacco, and electric radiant heaters are sources of ignition.
(2) The discharge of a cardiac defibrillator can serve as a source of ignition.
(3) Arcing and excessive temperatures in electrical equipment are sources of ignition. Electrically powered oxygen apparatus and electrical equipment intended for use in an oxygen-enriched atmosphere are sources of ignition if electrical defects are present.
(4) Electrical equipment not conforming to the requirements of 8.5.2.4.1, which can include, but is not limited to, electric razors, electric bed controls, hair dryers, remote television controls, and telephone handsets, can create a source of ignition if introduced into an oxygen-enriched atmosphere.
(5) A static discharge having an energy content that can be generated under normal conditions in respiratory therapy will not constitute an ignition source as long as easily ignited substances (such as alcohols, acetone, oils, greases, or lotions) are not present.
(6) Rapid opening of cylinder valves can cause sudden increase in downstream gas pressure and temperature caused by the adiabatic heat of recompression with consequent ignition of combustible materials in contact with the hot gas downstream, including the valve seat. Sudden compression or recompression of a gas to high pressure can generate large increase in temperature [up to 1093°C (2000°F)] that can ignite any organic material present, including grease. *(See also* NFPA 53, *Recommended Practice on Materials, Equipment, and Systems Used in Oxygen-Enriched Atmospheres.)*

B.2.2 Medical–Surgical Vacuum Systems. There are potential fire and explosion hazards associated with medical gas central piping systems and medical–surgical vacuum systems. The various components are usually not independent isolated components, but are parts of a larger system dedicated to total patient care and safety.

Many of these components are covered by existing standards to minimize the fire, explosive, and patient safety hazard. The potential for mistaken interconnection with oxidizing gases and for under-capacity requiring extended overheated operation all present potential hazards or compound other hazardous conditions that should be properly addressed. Although the potential for these problems exists, the Piping Committee on Medical Gas and Vacuum Systems is unaware of the actual occurrence of any significant fire-related hazards with medical–surgical vacuum systems.

There are also potential hazards to patients in the unplanned shutdown or failure of the systems secondary to a fire and/or the inability of the system to provide adequate levels of performance under normal or emergency situations. There is also the potential for mistaken interconnection with pressurized nonflammable medical gas systems.

B.2.3 Waste Anesthetic Gas Disposal. There are potential fire and explosion hazards associated with the gases that are removed from the anesthesia machine by the WAGD system. These gases typically include oxygen, nitrous oxide, and halogenated anesthetics. There are also potential hazards to patients and staff resulting from exposure to these gases or from improper interface between the very low pressures in the breathing circuit and the high vacuum present in some WAGD systems. There is also the hazard of interconnection between the WAGD system and the other medical gas systems, and especially the medical–surgical vacuum system.

Any mixture of breathing gases used in respiratory therapy will support combustion. In an oxygen-enriched atmosphere, materials that are combustible and flammable in air ignite more easily and burn more vigorously. Materials not normally considered to be combustible can be so in an oxygen-enriched atmosphere.

B.2.3.1 Toxicity During Respiratory Therapy Administration. Chemical hazards can be associated with the presence of residual sterilant in high-pressure equipment.

Some breathing mixtures can decompose in contact with hot surfaces and produce toxic or flammable substances.

Copyright National Fire Protection Association
Provided by IHS under license with NFPA
No reproduction or networking permitted without license from IHS
Not for Resale

Smoldering combustion of flammable substances can occur with the production of significant amounts of toxic gases and fumes.

B.2.3.2 Safety (Mechanical Injury, Cross-Connection, and So Forth). A large amount of energy is stored in a cylinder of compressed gas. If the valve of a cylinder is struck (or strikes something else) hard enough to break off the valve, the contents of the cylinder could be discharged with sufficient force to impart dangerous reactive movement to the cylinder.

B.2.3.3 Mechanical Hazards During Respiratory Therapy Administration. Cylinders and containers can be heavy and bulky and can cause personal injury or property damage (including to the cylinder or container) if improperly handled. In cold climates, cylinders or containers stored outdoors or in unheated ventilated rooms can become extremely cold. A hazardous situation could develop if these cylinders or containers are heated.

Improper maintenance, handling, or assembly of equipment can result in personal injury, property damage, or fire.

A hazardous condition exists if cylinders or containers are improperly located so that they can become overheated or tipped over. If a container is tipped over or placed on its side, liquid oxygen could be spilled. The liquid can cause frostbite on contact with skin.

A hazardous condition exists if there is improper labeling of cylinders or containers or inattention to the manufacturer's label or instructions.

A hazardous condition exists if care is not exercised in making slip-on and other interchangeable connections when setting up equipment.

Safety features, including relief devices, valves, and connections, are provided in equipment and gas supply systems. Altering or circumventing these safety features by means of adapters creates a hazardous condition.

Extreme danger to life and property can result when compressed gases are mixed or transferred from one cylinder to another. A hazardous condition exists if devices, such as fixed or adjustable orifices and metering valves, are directly connected to cylinders or systems without a pressure-reducing regulator.

Hazardous conditions are created when pressure-reducing regulators or gauges are defective.

B.2.3.4 Manufactured Assemblies. Specific hazards associated with manufactured assemblies are the same as those listed above as well as additional hazards resulting from improper assembly, separation and leakage resulting from hidden semipermanent connections, improper connection resulting in cross-connection, and blockage and flow problems resulting from damage to hose, and so forth.

B.3 Environmental System Hazards. See Electrical Systems Hazards (Section B.1) and Gas Equipment Hazards (Section B.6).

B.4 Flammability of Materials Hazards.

B.4.1 Flammable Materials. (Reserved)

B.4.2 Toxicity of Products of Combustion. Many substances, when subjected to a fire, undergo a chemical change resulting in a new toxic product. This is especially true of many plastic substances. Many highly toxic combustion products can cause sudden unconsciousness, cardiovascular collapse, and severe injury or death, even though the person injured is relatively remote from the fire. These combustion products have been found to cause injury after passing through halls, ventilating systems, and even electrical conduit.

B.4.3 Chemical Burns. (Reserved)

B.4.4 Safety. (Reserved)

B.4.5 Radioactivity. (Reserved)

B.5 Electrical Equipment Hazards. See Section B.1 for related electrical hazards.

B.5.1 Fire and Explosion. Transmission of electricity generates heat. The normal operating temperature of a device is a function of material and design. Equipment or wiring faults can cause abnormal temperature increases. These abnormal temperatures can cause fire and explosions. Use of oxygen or other oxidizing agents lowers ignition temperatures. Normal operating temperatures of equipment not designed for use in oxygen-enriched atmospheres can cause fires if used in oxygen-enriched atmospheres. See B.6.1.14 for other ignition hazards.

B.5.2 Electrical Shock.

B.5.2.1 Elimination of Shock Hazards.

B.5.2.1.1 Personnel are cautioned to be aware of the hazards presented by defective or improperly employed electrical equipment *(see B.5.2.2)* and to avoid the use of defective electrical equipment *(see 8.5.2.2.4)*.

B.5.2.1.2 Adequate grounding for electrical equipment is an important safeguard against fire and electric shock *(see 4.3.3.1 and 8.4.1.2.1.1)*.

B.5.2.2 Effects of Moisture. Moisture, in the form of liquids, vapors, or mists, can degrade insulation to the point where fire, equipment malfunction, and electric shock hazard become a threat. Moisture can enter equipment as a result of defective seals, leaks, or inadvertent spillage. Vessels containing liquids should not be placed on electrical equipment. See 4.3.2.2.8.

B.5.3 Burns.

B.5.3.1 Heated Surfaces. Sustained skin contact with surfaces of equipment that have temperatures in excess of 42°C (107°F) can cause burns. Caution is required when exposing patients to warmed surfaces, particularly when the patients are helpless.

B.5.3.2 High-frequency electromagnetic fields, particularly those from electrosurgical generators and from lasers, are used to intentionally destroy tissue. Inadvertent burns, or ignition of combustible materials, is a hazard. See Annex D.

B.5.4 Interruption of Power. (Reserved)

B.5.5 RF Interference. See Annex D.

B.5.6 Mechanical Injury. (Reserved)

B.6 Gas Equipment Hazards. See Electrical Systems Hazards (Section B.1) for electrical hazards associated with gas equipment.

B.6.1 Fire and Explosions.

B.6.1.1 Oxygen and nitrous oxide, the gases normally used for relative analgesia and as components of general anesthesia, are strong oxidizing gases and individually or as a mixture support combustion quite readily.

B.6.1.2 Inhalation gases or vapors introduce fire, chemical, mechanical, and electrical hazards that are all interrelated. Any mixture of inhalation gases will support combustion. In an oxygen-enriched atmosphere, materials that are flammable

--`,,```,,,,````-`-`,,`,,`,`,,`---

Copyright National Fire Protection Association
Provided by IHS under license with NFPA
No reproduction or networking permitted without license from IHS
Not for Resale

and combustible in air ignite more easily and burn more vigorously. The materials that could be found on or near patients include hair oils, oil-based lubricants, skin lotions, clothing, linens, paper, rubber, alcohols, acetone, and some plastics.

B.6.1.3 A hazard exists if any of the components of an oxygen or nitrous oxide supply system become contaminated with oil or grease.

B.6.1.4 Sources of ignition can include open flames, burning tobacco, electric heating coils, defective electrical equipment, and adiabatic heating of gases.

Sudden compression or recompression of a gas to high pressure can generate large increase in temperature [up to 1093°C (2000°F)] that can ignite any organic material present, including grease. *(See also NFPA 53, Recommended Practice on Materials, Equipment, and Systems Used in Oxygen-Enriched Atmospheres.)*

B.6.1.5 A hazard exists if either oxygen or nitrous oxide leaks into a closed space, creating an oxygen-enriched atmosphere.

B.6.1.6 A hazard exists if improper components are employed to connect equipment containing pressurized oxygen or nitrous oxide.

B.6.1.7 The occurrence of a fire is dependent on the presence of combustible or flammable materials, an atmosphere of oxygen or other oxidizing agents, and a source of ignition. When combustible materials are present and oxygen is being administered, flammable liquids and gases and ignition sources are to be avoided.

B.6.1.8 Any mixture of breathing gases used in respiratory therapy will support combustion. In an oxygen-enriched atmosphere, materials that are combustible and flammable in air ignite more easily and burn more vigorously. Materials not normally considered to be combustible change their characteristics in an oxygen-enriched atmosphere.

B.6.1.9 Combustible materials that could be found near patients who are to receive respiratory therapy include hair oils, oil-based lubricants, skin lotions, facial tissues, clothing, bed linen, tent canopies, rubber and plastic articles, gas-supply and suction tubing, ether, alcohols, and acetone.

B.6.1.10 A particular hazard exists when oxygen equipment becomes contaminated with oil, grease, or other combustible materials. Such contaminants will ignite readily and burn more rapidly in the presence of high oxygen concentrations and make it easier to ignite less combustible materials with which they come in contact.

B.6.1.11 An oxygen-enriched atmosphere normally exists in an oxygen tent, croup tent, incubator, and similar devices when supplemental oxygen is being employed in them. These devices are designed to maintain a concentration of oxygen higher than that found in the atmosphere.

Oxygen-enriched atmosphere exists in the immediate vicinity of all oxygen administration equipment. *(See also 3.3.170, Site of Intentional Expulsion, and A.3.3.170.)*

B.6.1.12 The transfer of liquid oxygen from one container to another container can create an oxygen-enriched atmosphere within the vicinity of the containers.

B.6.1.13 If oxygen is supplied by a container that stores the oxygen as a liquid, there will be a small amount of oxygen vented into the vicinity of the container after a period of nonuse of the equipment. Larger amounts of oxygen will be vented if the container is accidentally tipped over or placed on its side. This venting may create an oxygen-enriched atmosphere if the container is stored in a confined space.

B.6.1.14 Sources of ignition include not only the usual ones in ordinary atmospheres, but others that become significant hazards in oxygen-enriched atmospheres *(see B.6.1.7 and B.6.1.8)* such as the following:

(1) Open flames
(2) Burning tobacco
(3) Electric radiant heaters
(4) The discharge of a cardiac defibrillator
(5) Arcing and excessive temperatures in electrical equipment
(6) Electrically powered oxygen apparatus and electrical equipment intended for use in an oxygen-enriched atmosphere if electrical defects are present
(7) Electrical equipment not conforming to the requirements of 8.5.2.4.1, which includes, but is not limited to, the following:
    (a) Electric razors
    (b) Electric bed controls
    (c) Hair dryers
    (d) Remote television controls and telephone handsets if introduced into an oxygen-enriched atmosphere *(see 8.5.2.4.1)*
(8) Rapid opening of cylinder valves, which can cause sudden increase in downstream gas pressure and temperature caused by the adiabatic heat of recompression, with consequent ignition of combustible materials in contact with the hot gas downstream, including the valve seat

A static discharge having an energy content that can be generated under normal conditions in respiratory therapy will not constitute an ignition source as long as easily ignited substances (such as alcohols, acetone, oils, greases, or lotions) are not present.

B.6.2 Toxicity.

B.6.2.1 Chemical hazards can be associated with the presence of residual sterilant in high-pressure equipment.

B.6.2.2 Some breathing mixtures decompose when in contact with heat and produce toxic or flammable substances *(see 9.6.1)*.

B.6.2.3 Smoldering combustion of substances may produce toxic gases and fumes.

B.6.3 Mechanical.

B.6.3.1 A large amount of energy is stored in a cylinder of compressed gas. If the valve of a cylinder is struck (or strikes something else) hard enough to break off the valve, the contents of the cylinder could be discharged with sufficient force to impart dangerous reactive movement to the cylinder.

B.6.3.2 Cylinders and containers can be heavy and bulky and can cause personal injury or property damage (including to the cylinder or container) if improperly handled. In cold climates, cylinders or containers stored outdoors or in unheated ventilated rooms can become extremely cold *[see 9.7.2.4(11) and 9.7.2.1(3)]*. A hazardous situation could develop if these cylinders or containers are heated *[see 9.7.2.4(10)]*.

B.6.3.3 Improper maintenance, handling, or assembly of equipment can result in personal injury, property damage, or fire.

Copyright National Fire Protection Association
Provided by IHS under license with NFPA
No reproduction or networking permitted without license from IHS
Not for Resale

B.6.3.4 A hazardous condition exists if cylinders or containers are improperly located so that they become overheated or tipped over. If a container is tipped over or placed on its side, liquid oxygen could be spilled. The liquid can cause frostbite on contact with skin.

B.6.3.5 A hazardous condition exists if there is improper labeling of cylinders or containers or inattention to the manufacturer's label or instructions.

B.6.3.6 A hazardous condition exists if care is not exercised in making slip-on and other interchangeable connections when setting up equipment.

B.6.3.7 Safety features, including relief devices, valves, and connections, are provided in equipment and gas supply systems. Altering or circumventing these safety features by means of adapters creates a hazardous condition.

B.6.3.8 Extreme danger to life and property can result when compressed gases are mixed or transferred from one cylinder to another.

B.6.3.9 A hazardous condition exists if devices, such as fixed or adjustable orifices and metering valves, are directly connected to cylinders or systems without a pressure-reducing regulator.

B.6.3.10 Hazardous conditions are created when pressure-reducing regulators or gauges are defective.

B.6.4 Electric Shock. See B.5.2 for additional information.

B.7 Hyperbaric Hazards. Chapter 20 for the use of hyperbaric facilities is intended to provide protection against fire, explosion, and other hazards without unduly limiting the activities of professional personnel involved in patient (in the case of hospitals) or other care. This principle, without minimizing the hazards, recognizes that professional personnel shall be guided by all of the hazards to life that are inherent in and around hyperbaric treatment procedures.

B.7.1 Potential hazards involved in the design, construction, operation, and maintenance of hyperbaric facilities are formidable.

B.7.2 The navies of the world have established an enviable safety record in their use of hyperbaric facilities for deep-sea-diving research, training, and operations. A knowledge of this safety record should not lull hyperbaric personnel into a false sense of security, however. The potential hazards remain. Where civilian personnel — patients, experimental subjects, and chamber attendants — are involved, an appreciation of these hazards and their mitigation becomes even more important. For a discussion of hazards, see information in C.20.

Annex C Additional Explanatory Notes to Chapters 1–20

This annex is not a part of the requirements of this NFPA document but is included for informational purposes only.

C.1 Reserved.

C.2 Reserved.

C.3 Reserved.

C.4 Additional Information on Chapter 4.

C.4.1 Typical Hospital Wiring Arrangement. See Figure C.4.1. Separate transfer switches for each branch, as shown, are required only if dictated by load considerations. Smaller facilities can be served by a single transfer switch.

C.4.2 Maintenance Guide for an Essential Electrical System. This generalized maintenance guide is provided to assist administrative, supervisory, and operating personnel in establishing and evaluating maintenance programs for emergency electric generating systems. See Figure C.4.2.

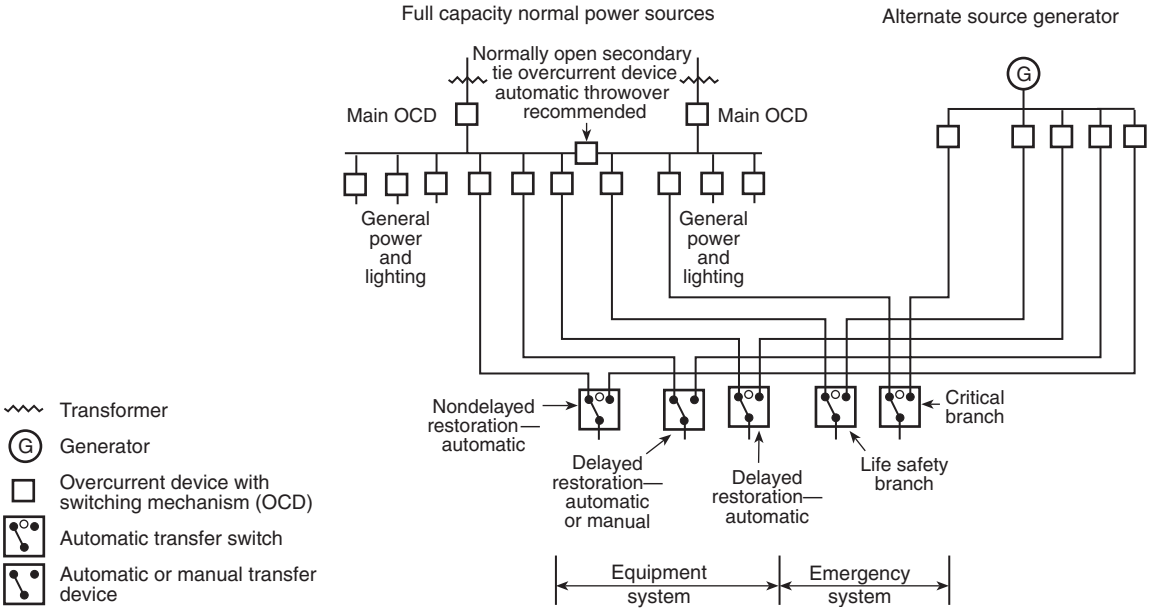

FIGURE C.4.1 Typical Hospital Wiring Arrangement.

Copyright National Fire Protection Association
Provided by IHS under license with NFPA
No reproduction or networking permitted without license from IHS
Not for Resale

MAINTENANCE GUIDE

Monthly

a. Testing of generator sets and transfer switches under load and operating temperature conditions at least every 30 days. A 30-minute exercise period is an absolute minimum, or the engine manufacturer's recommendations should be followed.

b. Permanently record all available instrument readings during the monthly test.

c. During the monthly test, check the following system or systems applicable to your installation:

Natural Gas or Liquid Petroleum Gas System:
- ❑ Operation of solenoids and regulators
- ❑ Condition of all hoses and pipes
- ❑ Fuel quantity

Gasoline Fuel System:
- ❑ Main tank fuel level
- ❑ Operation of system

Diesel Fuel System:
- ❑ Main tank fuel level
- ❑ Day tank fuel level
- ❑ Operation of fuel supply pump and controls

Turbine Prime Movers:
- ❑ Follow manufacturer's recommended maintenance procedure

Engine Cooling System:
- ❑ Coolant level
- ❑ Rust inhibitor in coolant
- ❑ Antifreeze in coolant (if applicable)
- ❑ Adequate cooling water to heat exchangers
- ❑ Adequate fresh air to engine and radiators
- ❑ Condition of fan and alternator belts
- ❑ Squeeze and check condition of hose and connections
- ❑ Functioning of coolant heater (if installed)

Engine Lubricating System:
- ❑ Lubricating oil level
- ❑ Crankcase breather not restricted
- ❑ Appearance of lubricating oil
- ❑ Correct lubricating oil available to replenish or change
- ❑ Operation of lubricating oil heater (if installed)
- ❑ Oil pressure correct

Engine Electrical Starting System:
- ❑ Battery terminals clean and tight
- ❑ Add distilled water to maintain proper electrolyte level
- ❑ Battery charging rate
- ❑ Battery trickle charging circuit operating properly
- ❑ Spare batteries charged if provided

Engine Compressed Air Starting System:
- ❑ Air compressor operating properly
- ❑ Air compressor lubricating oil level
- ❑ Spare compressed air tanks full
- ❑ Main compressed air tanks full
- ❑ Drain water from compressed air tanks

Engine Exhaust System:
- ❑ Condensate trap drained
- ❑ No exhaust leaks
- ❑ Exhaust not restricted
- ❑ All connections tight

Transfer Switch:
- ❑ Inside clean and free of foreign matter
- ❑ No unusual sounds
- ❑ Terminals and connectors normal color
- ❑ Condition of all wiring insulation
- ❑ All covers tight
- ❑ Doors securely closed

General:
- ❑ Any unusual condition of vibration, deterioration, leakage, or high surface temperatures or noise
- ❑ Maintenance manuals, service log, basic service tools, jumpers, and supplies readily available
- ❑ Check and record the time intervals of the various increments of the automatic start-up and shutdown sequences
- ❑ Overall cleanliness of room
- ❑ No unnecessary items in room

d. After the monthly test: Take prompt action to correct all improper conditions indicated during test. Check that the standby system is set for automatic start and load transfer.

Quarterly

a. On generator sets:

Engine Electrical Starting System:
- ❑ Check battery electrolyte specific gravity
- ❑ Check battery cap vents

Engine Lubricating System:
- ❑ Check lubricating oil (or have analyzed if part of an engineered lube oil program)

b. Fuel System:
- ❑ Drain water from fuel filters (if applicable)
- ❑ Drain water from day tank (if applicable)
- ❑ Check fuel gages and drain water from main fuel tanks
- ❑ Inspect all main fuel tank vents

© 2005 National Fire Protection Association (NFPA 99, 1 of 2)

FIGURE C.4.2 Maintenance Guide for an Essential Electrical System.

Copyright National Fire Protection Association
Provided by IHS under license with NFPA
No reproduction or networking permitted without license from IHS
Not for Resale

MAINTENANCE GUIDE (Continued)

Semiannually

a. On generator sets:

Engine Lubricating System:
- ❑ Change oil filter (if sufficient hours)
- ❑ Clean crankcase breather

Fuel System:
- ❑ General inspection of all components
- ❑ Change fuel filter
- ❑ Change or clean air filter

Governor:
- ❑ Check all linkages and ball joints
- ❑ Check oil level (if applicable)
- ❑ Observe for unusual oil leakage

Generator:
- ❑ Check brush length and pressure
- ❑ Check appearance of slip rings and clean if necessary
- ❑ Blow out with clean, dry compressed air

Engine Safety Controls:
- ❑ Check operation of all engine-operating alarms and safety shutdown devices (generator not under load during this check)

Annually

a. On generator sets:

Fuel System:

Diesel:
- ❑ Analyze fuel for condition (replace if required)

Gasoline:
- ❑ Replace fuel

Natural Gas or Liquefied Petroleum Gas:
- ❑ Examine all supply tanks, fittings, and lines

Lubricating Systems:
- ❑ Change oil
- ❑ Change oil filter
- ❑ Replace carburetor air filter

Cooling System:
- ❑ Check condition and rod-out heat exchangers if necessary
- ❑ Change coolant on closed systems
- ❑ Clean exterior of all radiators
- ❑ Check all engine water pumps and circulating pumps
- ❑ Examine all duct work for looseness
- ❑ Clean and check motor-operated louvers

Exhaust System:
- ❑ Check condition of mufflers, exhaust lines, supports, and connections

Ignition System:
- ❑ Spark ignition engines
- ❑ Replace points and plugs
- ❑ Check ignition timing
- ❑ Check condition of all ignition leads

Generator:
- ❑ Clean generator windings
- ❑ Check generator bearings
- ❑ Measure and record resistance readings of generator windings using insulation tester (megger)

Engine Control:
- ❑ General cleaning
- ❑ Check appearance of all components
- ❑ Check meters

b. Transfer Switch:
- ❑ Inspect transfer switch and make repairs or replacements if indicated

c. On main switchgear and generator switchgear:
- ❑ Operate every circuit breaker manually
- ❑ Visually check bus bars, bracing, and feeder connections for cleanliness and signs of overheating

Every Three Years

a. System Controls:
- ❑ Reevaluate the settings of the voltage sensing and time delay relays

b. Main Switchgear and Generator Switchgear:
- ❑ Determine whether changes to the electrical supply system have been made that require a revision of the main circuit breaker, fuse, or current-limiting bus duct coordination.
- ❑ Calibrate and load test main circuit breakers. Spot-check bus bar bolts and supports for tightness. Obtain and record insulation tester readings on bus bars and circuit breakers. Obtain and record insulation tester readings on internal distribution feeders.

Periodically

a. Prime Mover Overhaul:
- ❑ Each prime mover should have a periodic overhaul in compliance with the manufacturer's recommendation or as conditions warrant.

b. Connected Load:
- ❑ Update the record of demand and connected load and check for potential overload.

© 2005 National Fire Protection Association (NFPA 99, 2 of 2)

FIGURE C.4.2 ***Continued***

Copyright National Fire Protection Association
Provided by IHS under license with NFPA
No reproduction or networking permitted without license from IHS
Not for Resale

C.4.3 Suggested Format for Listing Functions to Be Served by the Essential Electrical System in a Hospital. It may be advantageous, in listing the specific functions for a given construction project or building review, to list them, at the outset, by geographical location within the project, in order to ensure comprehensive coverage. Every room or space should be reviewed for possible inclusion of the following:

(1) Lighting (partial or all)
(2) Receptacles (some or all)
(3) Permanently wired electrical apparatus

The format suggested herein is offered as a convenient tool, not only for identifying all functions to be served and their respective time intervals for being reenergized by the alternate electric source, but also for documenting other functions that were considered, discussed, and excluded as nonessential. This last column is considered worthy of attention. *(See Figure C.4.3.)* It may be that the hospital engineer or the reviewing authority will wish to keep on file a final copy of the list, which would be the basis for the electrical engineer's detailed engineering design.

Although this suggested format is intended for use by a hospital it may, with suitable changes, be useful for other health care facilities.

C.5 Additional Information on Chapter 5. Numbers in brackets refer to paragraphs in Chapter 5 of text.

C.5.1 Initial Testing of Nonflammable Medical Piped Gas Systems (Level 1 Systems).

Essential Electrical Systems

Hospital _____ Date _____

Room no.	Room name	Function served*	Emergency system		Equipment system		Non-essential
			Life safety branch	Critical branch	Delayed auto.**	Delayed manual	

* Indicate precise lighting, receptacles, and/or equipment. Use a separate line for each function.

** Indicate time interval.

FIGURE C.4.3 Essential Electrical Systems.

C.5.1.1 [5.1.3.4.6.1] The pressure relief valve, set at 50 percent above normal line pressure, should be tested to assure proper function prior to use of the system for patient care.

C.5.1.2 [5.1.3.5.2] The proper functioning of the safety valve, automatic drain, pressure gauge, and high-water-level sensor should be verified before the system is put into service.

C.5.1.3 [5.1.9.2.4; 5.1.3.4.10, 5.1.3.4.12, and 5.1.3.4.13] Changeover Warning Signal.

(1) Start a flow of gas from an outlet of the piping system.
(2) Close the shutoff valve or cylinder valves on the primary supply of the manifold *[see Figure A.5.1.3.4.9(a) and Figure A.5.1.3.4.9(b)]*, or the primary unit of the alternating bulk supply to simulate its depletion *(see Figure A.5.1.3.4.13)*. Changeover should be made to the secondary supply or the alternate bulk unit.
(3) Check main-line pressure gauge to ensure maintenance of the desired pressure.
(4) Check signal panels for activation of the proper changeover signal.
(5) Silence the audible signal; visual signal should remain.
(6) Open the valves closed in Step (2). Close the valve on the secondary supply or alternate bulk unit. When changeover back to original primary supply has occurred, reopen the valve. This will reinstate system to its original status.
(7) Check signal panels for deactivation of warning signals.
(8) Stop flow of gas from the piping system.

C.5.1.4 [5.1.9.2.4; 5.1.3.4.10, 5.1.3.4.12, and 5.1.3.4.13] Reserve-In-Use Warning Signal.

(1) Start a flow of gas from the piping system.
(2) Close the proper shutoff valves to simulate depletion of the operating supply. Reserve should begin to supply the piping system.
(3) Check the main-line pressure gauge. Pressure should remain at the desired level.
(4) Check the master signal panels to determine that the reserve-in-use signals have been activated.
(5) Silence the audible signal. Visual signal should remain.
(6) Open the shutoff valves closed in Step (2).
(7) Check master signal panels for deactivation of the warning signals.
(8) Stop the flow of gas from the piping system.

C.5.1.5 [5.1.9.2.4; 5.1.3.4.12, 5.1.3.4.13, 5.1.3.4.15, and 5.1.3.8.2.3] Reserve Supply Low.

(1) Start a flow of gas from the piping system.
(2) Close all operating supply shutoff valves (to use pressure from the reserve).
(3) Close the reserve supply shutoff valve or, if necessary, the reserve cylinder valves, depending on the exact location of the actuating switch (to reduce pressure on the actuating switch, simulating loss of reserve).
(4) Open the operating supply valves closed in Step (2) (so that only the "reserve low" signal should be activated).
(5) Check the master signal panels for activation of the proper signal.
(6) Silence the audible signal. Visual signal should remain.
(7) Open reserve supply valve or cylinder valves closed in Step (3).
(8) Check master signal panels for deactivation of the warning signals.
(9) Stop flow of gas from the piping system.

Note on Liquid Bulk Reserves. This type of reserve requires an actuating switch on the contents gauge and another actuating

--`,,```,,,,````-`-`,,`,,`,`,,`---

Copyright National Fire Protection Association
Provided by IHS under license with NFPA
No reproduction or networking permitted without license from IHS
Not for Resale

switch for the gas pressure being maintained in the reserve unit. Reduced contents or gas pressure in the reserve unit would indicate less than a day's supply in reserve.

Simulation of these conditions requires the assistance of the owner or the organization responsible for the operation and maintenance of the supply system as it will vary for different styles of storage units.

C.5.1.6 [5.1.9.2.4] High or Low Pressure in Piping System. Initial test of the area alarms covered in 5.1.9.3 can be done at the same time.

(1) Increase the pressure in the piping system to the high-pressure signal point (20 percent above normal pressure).
(2) Check all master signal panels (and area signals) to ensure that the properly labeled warning signal is activated; also check main-line pressure gauge and area gauges to ensure their function.
(3) Silence the audible signal. Visual signal should remain.
(4) Reduce piping system pressure to the normal. A flow from the system is required to lower the pressure and permit readjustment of the line regulator.
(5) Check all signal panels for deactivation of the signals.
(6) Close main-line shutoff valve.
(7) Continue the flow from the system until pressure is reduced to the low-pressure signal point (20 percent below normal).
(8) Check all signal panels for activation of the properly labeled warning signal; also check main-line gauge and area pressure gauges to ensure their function.
(9) Silence the audible signal. Visual signal should remain.
(10) Open main-line shutoff valve.
(11) Check main-line gauge for proper line pressure.
(12) Check all signal panels for deactivation of warning signals.

C.5.1.7 [5.1.9.3] This signal should be initially tested at the time the tests of C.5.1.6 are performed.

C.5.2 Retesting and Maintenance of Nonflammable Medical Piped Gas Systems (Level 1 Systems).

C.5.2.1 [5.1.3.4.10] These systems should be checked daily to assure that proper pressure is maintained and that the changeover signal has not malfunctioned. Periodic retesting of the routine changeover signal is not necessary as it will normally be activated on a regular basis.

C.5.2.2 [5.1.3.4.12] These systems should be checked daily to assure that proper pressure is maintained and that the changeover signal has not malfunctioned. Periodic retesting of the routine changeover signal is not required. Annual retesting of the operation of the reserve and activation of the reserve-in-use signal should be performed.

C.5.2.3 [5.1.3.4.12] If the system has an actuating switch and signal to monitor the contents of the reserve, it should be retested annually.

C.5.2.4 [5.1.3.4.13] Maintenance and periodic testing of the bulk system is the responsibility of the owner or the organization responsible for the operation and maintenance of that system.

The staff of the facility should check the supply system daily to ensure that medical gas is ordered when the contents gauge drops to the reorder level designated by the supplier. Piping system pressure gauges and other gauges designated by the supplier should be checked regularly, and gradual variation, either increases or decreases, from the normal range should be reported to the supplier. These variations might indicate the need for corrective action.

Periodic testing of the master signal panel system, other than the routine changeover signal, should be performed. Request assistance from the supplier or detailed instruction if readjustment of bulk supply controls is necessary to complete these tests.

C.5.2.5 [5.1.8.2.3] The main-line pressure gauge should be checked daily to ensure the continued presence of the desired pressure. Variation, either increases or decreases, should be investigated and corrected.

C.5.2.6 [5.1.3.5.15] Quarterly rechecking of the location of the air intake should be made to ensure that it continues to be a satisfactory source for medical compressed air.

C.5.2.7 [5.1.3.5.14] Proper functioning of the pressure gauge and high-water-level sensor should be checked at least annually. Check the receiver drain daily to determine if an excessive quantity of condensed water has accumulated in the receiver.

C.5.2.8 [5.1.3.5] An important item required for operation of any medical compressed air supply system is a comprehensive preventive maintenance program. Worn parts on reciprocating compressors can cause high discharge temperatures resulting in an increase of contaminants in the discharge gas. Adsorber beds, if not changed at specified time intervals, can become saturated and lose their effectiveness. It is important that all components of the system be maintained in accordance with the manufacturers' recommendations. It is important that any instrumentation, including analytical equipment, be calibrated routinely and maintained in operating order. Proper functioning of the dew point sensor should be checked at least annually.

C.5.2.9 [5.1.9] When test buttons are provided with signal panels, activation of the audible and visual signals should be performed on a regular basis (monthly).

C.5.2.10 [5.1.9.2.4] Changeover Warning Signals. As these are routine signals that are activated and deactivated at frequent intervals, there is no need for retesting UNLESS they fail. If the reserve-in-use signal is activated because both units of the operating supply are depleted without the prior activation of the changeover signal, it should be repaired and retested.

C.5.2.11 [5.1.9.2.4] Reserve-In-Use Warning Signal. All components of this warning signal system should be retested annually in accordance with Steps (2) through (7) of the procedure given in C.5.1.4. Audible and visual signals should be tested periodically during the year (monthly).

C.5.2.12 [5.1.9.2.4] Reserve Supply Low (Down to an Average One-Day Supply) High-Pressure Cylinder or Liquid Reserve. All components of these signal warning systems should be retested annually in accordance with Steps (2) through (8) of the procedure given in C.5.1.5. If test buttons are provided, audible and visual signals should be periodically tested throughout the year (monthly).

C.5.2.13 [5.1.9.2.4] The medical compressed air system alarms in 5.1.3.5.14 should be checked at least annually.

C.5.2.14 [5.1.8.2.2(1)] This pressure gauge should be checked on a daily basis to ensure proper piping system pressure. A change, increase or decrease, if noted, can give evidence that maintenance is required on the line pressure regulator and could thus avoid a problem.

Copyright National Fire Protection Association
Provided by IHS under license with NFPA
No reproduction or networking permitted without license from IHS
Not for Resale

C.5.2.15 [5.1.9] Annual retesting of all components of warning systems, if it can be done without changing piping system line pressure, should be performed.

C.5.2.16 [5.1.9] If test buttons are provided, the retesting of audible and visual alarm indicators should be performed monthly.

C.5.2.17 [5.1.4] Shutoff valves should be periodically checked for external leakage by means of a test solution or other equally effective means of leak detection safe for use with oxygen.

C.5.2.18 [5.1.5] Station outlets should be periodically checked for leakage and flow. Instructions of the manufacturer should be followed in making this examination.

C.5.3 Oxygen Service–Related Documents. The following publications can be used for technical reference:

(1) ASTM G 63, *Standard Guide for Evaluating Nonmetallic Materials for Oxygen Service*
(2) ASTM G 88, *Standard Guide for Designing Systems for Oxygen Service*
(3) ASTM G 93, *Practice for Cleaning Methods and Cleanliness Levels for Material and Equipment Used in Oxygen-Enriched Environments*
(4) ASTM G 94, *Standard Guide for Evaluating Metals for Oxygen Service*

C.6 Reserved.

C.7 Reserved.

C.8 Reserved.

C.9 Additional Information on Chapter 9.

C.9.1 Medical Safeguards, Respiratory Therapy.

C.9.1.1 General.

C.9.1.1.1 Personnel setting up, operating, and maintaining respiratory therapy equipment, including suction apparatus, should familiarize themselves with the problems of the use of each individual unit.

C.9.1.1.2 Personnel must be aware of the exact location of equipment in storage to facilitate emergency use.

C.9.1.1.3 Suction tubing employed in a hazardous location is to be electrically conductive.

C.9.2 Glossary of Respiratory Therapy Terminology.

C.9.2.1 Arrhythmia. Irregularity of heartbeats.

C.9.2.2 Asphyxia. Suffocation from lack of oxygen and an accumulation of carbon dioxide.

C.9.2.3 Aspiration. Removal of accumulated mucus by suction.

C.9.2.4 Bronchi. The two primary divisions of the trachea.

C.9.2.5 CPAP. Continuous positive airway pressure.

C.9.2.6 CPR. Cardiopulmonary resuscitation.

C.9.2.7 Croup Tent. Equipment utilized to provide environmental control inside a canopy in relation to oxygen concentration, temperature, humidity, and filtered gas.

C.9.2.8 Cyanosis. A bluish discoloration of skin and mucus membranes due to excessive concentration of reduced hemoglobin in the blood.

C.9.2.9 Defibrillate. Use of electrical shock to synchronize heart activity.

C.9.2.10 Diffusion. Transfer of gases across the alveolar capillary membrane.

C.9.2.11 EKG, ECG. Electrocardiogram.

C.9.2.12 Hemoglobin. The chemical compound in red blood cells that carries oxygen.

C.9.2.13 Hypoxia. An abnormally decreased supply or concentration of oxygen.

C.9.2.14 IMV. Intermittent mandatory ventilation.

C.9.2.15 IPPB. Intermittent positive pressure breathing.

C.9.2.16 PEEP. Positive end expiratory pressure.

C.9.2.17 Respiration. The exchange by diffusion of gases between the alveoli, the blood, and the tissue.

C.9.2.18 RLF. A disease entity of the premature infant causing blindness.

C.9.2.19 Thorax. The chest; the upper part of the trunk between the neck and the abdomen.

C.9.2.20 Trachea. The windpipe leading from the larynx to the bronchi.

C.9.2.21 Ultrasonic Nebulizer. A device that produces sound waves that are utilized to break up water into aerosol particles.

C.9.2.22 Ventilation. Movement of air into and out of the lungs.

C.9.2.23 Ventilator. Machine used to support or assist nonbreathing or inadequately breathing patient.

C.9.3 Suggested Fire Response, Respiratory Therapy. Suggested procedure in the event of fire involving respiratory therapy apparatus.

C.9.3.1 General. Fires in oxygen-enriched atmospheres spread rapidly, generate intense heat, and produce large volumes of heated and potentially toxic gases. Because of the immediate threat to patients and personnel, as well as the damage to equipment and possible spread to the structure of the building, it is important that all personnel be aware of the steps necessary to save life, to preserve limb, and, within reason, to extinguish or contain the fire.

C.9.3.2 Steps to Take in Event of Fire.

C.9.3.2.1 The following steps are recommended in the event of a fire, in the approximate order of importance:

(1) Remove the patient or patients immediately exposed from the site of the fire if their hair and clothing are not burning; if they are burning, extinguish the flames. *(See C.9.3.4 and C.9.3.5.)*
(2) Sound the fire alarm by whatever mode the hospital fire plan provides.
(3) Close off the supply of oxygen to the therapy apparatus involved if this step can be accomplished without injury to personnel. *(See C.9.3.3.)*
(4) Carry out any other steps specified in the fire plan of the hospital. For example:
    (a) Remove patients threatened by the fire
    (b) Close doors leading to the site of the fire
    (c) Attempt to extinguish or contain the fire *(See C.9.3.4.)*
    (d) Direct fire fighters to the site of the fire
    (e) Take whatever steps necessary to protect or evacuate patients in adjacent areas

Copyright National Fire Protection Association
Provided by IHS under license with NFPA
No reproduction or networking permitted without license from IHS
Not for Resale

C.9.3.3 Closing Off of Oxygen Supply.

C.9.3.3.1 In the event of a fire involving respiratory therapy equipment connected to an oxygen station outlet, the zone valve supplying that station is to be closed.

C.9.3.3.1.1 All personnel are cautioned to be aware of the hazard of such a step to other patients receiving oxygen supplied through the same zone valve. Steps should be taken to minimize such hazards, realizing that closing the valve is of foremost importance.

C.9.3.3.2 In the case of oxygen therapy apparatus supplied by a cylinder or container of oxygen, it is desirable to close the valve of the cylinder or container, provided that such closure can be accomplished without injury to personnel.

Note that metallic components of regulators and valves can become exceedingly hot if exposed to flame. Personnel are cautioned not to use their bare hands to effect closure.

C.9.3.4 Extinguishment or Containment of Fire.

C.9.3.4.1 Fire originating in or involving respiratory therapy apparatus generally involves combustibles such as rubber, plastic, linen, blankets, and the like. Water or water-based extinguishing agents are most effective in such fires.

C.9.3.4.1.1 Precautions should be observed if electrical equipment is adjacent to or involved in the fire, because of the danger of electrocution of personnel if streams of water contact live 115-V circuits.

C.9.3.4.1.2 Before attempting to fight such a fire with water or a water-based extinguishing agent, such electrical apparatus should be disconnected from the supply outlet, or the supply circuit deenergized at the circuit panel.

C.9.3.4.1.3 If such deenergization cannot be accomplished, water should not be employed. *(See C.9.3.4.2.)*

C.9.3.4.2 Fires involving or adjacent to electrical equipment with live circuits can be fought with extinguishers suitable for Class C fires, in accordance with NFPA 10, *Standard for Portable Fire Extinguishers*.

Note that chemical extinguishers are not effective against fires in oxygen-enriched atmospheres unless the source of oxygen is shut off. See C.9.3.3 for closing off oxygen supply.

C.9.3.5 Protection of Patients and Personnel.

C.9.3.5.1 Because of the intense heat generated, serious and even fatal burns of the skin or of the lungs from inhaling heated gases are possible sequelae to the oxygen-enriched-atmosphere fire. Thus, it is essential that patients be removed from the site of the fire whenever practical.

Note that where a nonambulatory patient is connected to a burning piece of therapy equipment, it might be more practical as the initial step to remove the equipment and/or extinguish the fire than to remove the patient.

C.9.3.5.2 The large quantities of noxious gases produced constitute a threat to life from asphyxia, beyond the thermal burn problem.

C.9.3.5.2.1 Personnel are cautioned not to remain in the fire area after patients are evacuated if quantities of gaseous combustion products are present.

C.9.3.6 Indoctrination of Personnel.

C.9.3.6.1 It is highly desirable that personnel involved in the care of patients, including nurses, aides, ward secretaries, and physicians, irrespective of whether or not they are involved in respiratory therapy practices, be thoroughly indoctrinated in all aspects of fire safety, including the following:

(1) The location of zone valves of nonflammable medical gas systems where employed, and the station outlets controlled by each valve.
(2) The location of electrical service boxes, and the areas served thereby.
(3) The location of fire extinguishers, indications for their use, and techniques for their application.
(4) The recommended methods of evacuating patients, and routes by which such evacuation is accomplished most expeditiously. Reference should be made to the facility's fire plan.
(5) The steps involved in carrying out the fire plan of the hospital.
(6) The location of fire alarm boxes, or knowledge of other methods, for summoning the local fire department.

C.9.4 Typical Gas Cylinders. See Table C.13.5.

C.10 Reserved.

C.11 Additional Information on Chapter 11.

C.11.1 Fire Incidents in Laboratories. The following descriptions of laboratory fires are selected from previous editions of NFPA 99 and from the National Fire Incident Reporting System data base.

C.11.1.1 Iowa, October 1980. A hospital fire, originating in a second-floor pathology laboratory, occurred when electrical wires arced and ignited cloth towels placed under beakers. The beakers contained tissue samples, alcohol, and formaldehyde. The contents of the beakers caused the fire to spread to other larger containers of chemicals in the lab.

There was a 20- to 30-minute delay in detection of this fire because there was no automatic smoke detection equipment in the laboratory. Smoke detectors in the air ducts located in the hallways did operate when the smoke filtered out of the lab. There was no automatic sprinkler system.

No other specifics were reported as to the cause of the electrical arcing.

Direct property damage was estimated at $20,000.

C.11.1.2 Pennsylvania, December 1980. A small fire, of electrical nature, broke out in a hospital laboratory. The fire involved a condensate drip tray that was used to dissipate water from a refrigerator unit. The probable fire scenario was that a short circuit resulted from the aging rubber insulation of the cord. The unit is always left "on."

No direct property damage was reported for this fire. There were no automatic sprinklers in the lab area of the hospital. There were heat detectors in the area, but no smoke detectors. The fire generated large amounts of smoke.

C.11.1.3 Rhode Island, October 1981. A fire occurred in a blood bank/donor lab in a hospital. A patient was lying on one of three contour couches in the donor room giving blood. The technician pushed a button to raise the couch, then heard a pop, and saw flames and smoke coming from the couch. The technician tried unsuccessfully to extinguish the fire with a portable fire extinguisher.

A supervisor pulled the manual pull station and the fire department arrived within 3 minutes.

One civilian and one fire fighter were injured in the fire.

--`,,```,,,,````-`-`,,`,,`,`,,`---
Copyright National Fire Protection Association
Provided by IHS under license with NFPA
No reproduction or networking permitted without license from IHS
Not for Resale

There was extensive smoke and soot damage in the area. Direct property damage was estimated at $12,000. The fire occurred in an unsprinklered building.

The cause of the fire was determined to be a short circuit in the wiring in the motor of the couch.

C.11.1.4 New Jersey, April 1982. A small hospital fire occurred in a processing laboratory where tissue samples are cut and mounted in metal or polypropylene cassettes and then run through a processor. In the processor, the mounted samples are dipped in a series of baths. The cassettes were stored in polystyrene cabinets.

The cause of the fire was undetermined. Damage was confined to a 6-ft^2 area in the corner of the tissue lab. The fronts of the cassette cabinets suffered partial melting and some cassettes had the paraffin melted. It was estimated that 80 percent of the specimen cassettes were intact and salvageable.

Total direct property damage was estimated at $70,000 and business interruption at $4,000.

A single sprinkler head operated and extinguished the fire. The waterflow alarm was received by the hospital switchboard and the municipal dispatching service.

C.11.1.5 Massachusetts, April 1982. A tissue laboratory in a hospital was the scene of a fire that resulted in $50,000 in direct property damage. An additional $50,000 was lost due to business interruption.

The tissue lab was located in the pathology area of the lab building and housed 11 tissue processing machines. Eight of the machines were used to dehydrate tissue samples in a xylene concentrated solution or an alcohol solution.

When a technician left the room at 5:15 p.m., all the machines were functioning properly. Twenty minutes later, a waterflow and smoke detection alarm was received at the command center with direct transmission to the fire department. Two sprinkler heads helped control the fire. The fire was extinguished by the fire department using a 1½-in. hand line from an interior standpipe. The fire was attributed to the jamming of one of the baskets of a processing machine as it was being moved from one carriage to another. The motor failed to shut down as it should have, overheated, and eventually ignited the flammable xylene and alcohol solutions.

C.11.1.6 Tennessee, May 1984. The overheating of xylene inside a distiller located in the hospital lab resulted in a fire. Apparently, the escaping flammable vapors were ignited by ordinary electrical equipment in the room. Prompt and effective automatic sprinkler activation helped minimize fire damage.

The fire occurred in a fourth floor histology lab. Among the contents of the lab were small xylene stills for reclaiming used solvent, and also tissue processing equipment. A technician had filled the distiller with xylene. Some time later, another person working in the area of the distiller noticed that an odor was coming from the unit and that the solution had a brown color to it. This employee left to find someone to inspect the distiller. This employee returned with another worker to find a grayish haze around the console. Just after leaving the room, the employees saw smoke coming from under the door. A "Code Red" was sounded and the lab was evacuated. The technician who originally was running the machine returned at the sound of the alarm and tried to turn off the instrument by crawling on the floor, but was unable to do so because of the smoke and smell of xylene.

Property loss was estimated at $150,000, and business interruption resulted in an additional $15,000.

C.11.1.7 Florida, December 1985. A fire broke out in a hospital pathology lab and resulted in $100,000 in property damage, and an additional $2,000 in business interruption. The pathology lab analyzes tissue samples from patients. These samples are preserved in an embedding center using paraffin as the preserving agent.

The cause of the fire was determined to be the failure of a thermostat that controls the temperature of the heating element that melts the paraffin in the tissue embedding center.

The fire damaged two tissue-embedding centers, an ultrasonic cleaner, two light fixtures, a wood wall cabinet, as well as damaging the wall and ceiling. Microscopes, computer terminals, measuring equipment, and tissue slides and samples were among the items damaged by smoke and soot. The fire damage was confined to the lab.

An employee smelled smoke coming from the lab and noticed that the lab door was hot. A security guard was called immediately and pulled the alarm at a manual station in the hallway. The fire department extinguished the fire with dry chemicals and an inside hose stream located in the hallway. There were no heat or smoke detectors inside the pathology lab. The building was unsprinklered.

C.11.1.8 New York, April 1988. A hospital laboratory was the scene of a $250,000 fire. The fire started when a professor was sterilizing a pair of scissors using the "flaming" procedure. The "flaming" method involves dipping an item into alcohol and then burning off that alcohol with a Bunsen burner. The professor carried out the procedure once, then tried to do it a second time because he thought he had contaminated the scissors. During the second attempt, the alcohol he dipped the scissors into ignited because the scissors were still hot. The container of alcohol was dropped and the fire spread to nearby combustibles, including other flammable liquids.

A security guard noticed the fire and immediately pulled the alarm signaling the fire department and hospital fire brigade. The fire department responded promptly and extinguished the fire.

There were no automatic sprinklers in the fire area. Three civilians were injured in the fire.

C.11.1.9 California, April 1989. The thermostat of a low-temperature lab oven (incubator) malfunctioned, causing the oven to overheat. The unit heated to approximately 200 degrees overnight, causing a smoldering fire. An employee discovered the fire in the sixth-floor laboratory in the medical center when he arrived early to work. His first action was to shut off the incubator, after which he called the fire department.

Fire destroyed the contents of the incubator, and the incubator itself needed repairs due to exposure to dry powder agent. Smoke damage also occurred in the lab and hallway. Property damage was estimated at $1,000.

An alarm sounded after the fire department had used an extinguisher on the fire. The type of alarm was not reported.

C.11.1.10 California, November 1989. Four fire fighters were injured at a fire in a pathology lab at a multi-story hospital medical center when they were exposed to toxic chemical debris and human tissue. The fire originated in a stainless steel cabinet that had two glass-windowed doors. There were two pieces of equipment in the cabinet that were used to process tissue by dipping trays of tissues into a series of containers. The machines were about 20 years old.

Copyright National Fire Protection Association
Provided by IHS under license with NFPA
No reproduction or networking permitted without license from IHS
Not for Resale

The official cause of the fire was listed as a malfunctioning piece of electrically powered lab equipment igniting volatile flammable liquid. The exact point of failure could not be determined.

Automatic detection equipment was present and operated. There was no automatic sprinkler system present in the lab. Direct property loss was estimated at $325,000. No estimates were given for business interruption.

C.11.1.11 Michigan, March 1981. A building that housed various analytical research and development laboratories was the scene of a $60,000 fire. The laboratory involved in the fire was used essentially for liquid and gas chromatography.

The fire occurred when solvent leakage inside, or adjacent to, a liquid chromatograph ignited from an electrical source. Apparently, a small amount of solvent was spilled for up to 25 minutes and subsequently ignited. The fire burned through a plastic tube feeding a waste solvent container on a shelf. The spilled waste solvent intensified the fire. Liquid chromatography uses solvents of methanol and iso-octane.

An employee first heard a crackling and then saw flames at the base of the liquid chromatography instrument. Employees immediately attacked the fire with a dry chemical fire extinguisher. Also, two sprinkler heads operated, limiting the spread of fire within the laboratory. The fire department received a waterflow alarm, a manual fire alarm box, and several phone calls. Fire fighters found the fire nearly out on arrival because of sprinkler activation and consumption of the spilled liquid.

C.11.1.12 Virginia, June 1981. A small fire occurred in a laboratory that manufactures interferon. During this process, red and white blood cells are separated, and the white cells are placed in beakers with nutrients. A virus is introduced to the white cell cultures, which then produce the interferon. A centrifuge is used to separate the interferon from the white cells. The process is carried out in a small refrigerated room isolated from other areas by insulated metal panel walls and ceiling.

In the early afternoon, an employee stabilized a magnetic stirring rod that had been banging the side of one of the glass beakers.

Minutes later, personnel noticed smoke and fire within the refrigerated room and immediately extinguished the fires with extinguishers. The fire department also was notified.

Alcohol spilling onto the electrical parts of the magnetic stirrer caused the fire. The spilling was caused by inadequate supervision of the magnetic stirrer.

The fire resulted in $235,000 in direct property damage and an additional $40,000 in business interruption. Metal walls and ceiling panels, some laboratory equipment, and an unknown quantity of interferon were destroyed or damaged in the fire.

There were no automatic detection or suppression systems in the building. There were manual pull stations and portable extinguishers.

C.11.1.13 Tissue Processor Fire. Operated 24 hours per day, but unattended from 11 p.m. to 7 a.m., a tissue processor was suspected of causing $200,000 damage because the incident occurred after 11 p.m. and there were no detectors or automatic extinguishing equipment in the laboratory. Flammable liquids in glass containers stored in an open shelf below the equipment contributed to the intensity of the fire.

Aside from damage to the laboratory, electrical cables in the corridor near the incident shorted and caused power to be interrupted in the hospital. Fire doors closed, but the fire alarm was not sounded.

C.11.1.14 Hot Plate Fires. Acetone, being poured at the sink in a patient treatment lab, was ignited by a nearby hot plate that had just been turned off. The technician dropped the container, which was metal and which, fortunately, fell in an upright position. The patient was safely evacuated, but the fire was intense enough to melt the sweated water pipe fittings of the window ventilator.

Petroleum ether caught fire while a chemist was pouring it in a fume hood from its large glass container — presumably ignited by a nearby hot plate that had recently been turned off. He dropped the glass container on the floor and ran from the room. The bottle broke; ignition caused enough pressure to blow open the lab escape hatch and slam the entrance door shut.

C.11.1.15 Refrigerator Explosion. Eighty ml of diazomethane dissolved in ether detonated in a domestic-type refrigerator. The door blew open, the frame bowed out, and the plastic lining ignited, causing a heavy blanket of soot to be deposited far down the adjoining corridor. *(See 11.7.2.5.)*

C.11.1.16 Pressure Filter Fire. At an eastern hospital pharmacy, a fire-conscious technician prepared for pressure filtering of 50 gal (220 L) of isopropyl alcohol by placing a towel on a table adjacent to the pump; in the event of fire he planned to smother flames of alcohol inadvertently spilled on his person. As he attempted to turn on the pump, the defective switch ignited alcohol on his hands. Instinctively, he reached for the towel as he had previously rehearsed in his mind but, in doing so, he tripped over the hose that was conducting alcohol by gravity from a large open kettle to the suction side of the pump. The hose slipped from its fittings, thereby dumping 50 gal (220 L) of the flaming solvent onto the floor. He escaped with minor injuries, but the pharmacy was destroyed. (Many fires are intensified by an unfortunate sequence of minor unsafe practices that in themselves seem almost too insignificant to worry about.)

C.11.1.17 Water Bath Fire. When the thermostat on a water bath malfunctioned, the bath overheated, causing the acrylic lid to sag and contact the heater elements. A fire resulted. Heater equipment should always be protected by overtemperature shutoffs. (Based on *DuPont Safety News*, June 14, 1965.)

C.11.1.18 Peroxide Explosion. A distillation apparatus exploded within a lab fume hood. It was caused by the detonation of the residual peroxide. The drawn sash prevented injury, although the electric mantle was torn to shreds. The investigator was using "some isopropyl ether," which had been kept in a clear glass bottle. He allowed the distillation to continue to dryness.

Investigators should become more aware of the nature of ether peroxide formations. Dioxane and ethyl and isopropyl ethers are the most common offenders. Age, sunlight, air space above liquid, and clear glass containers help to create these explosive peroxides. Test frequently for peroxide; filter out peroxides through a column of 80 mesh Alorco activated alumina, as suggested by Dasler and Bauer, *Ind. Eng. Chem. Anal.*, Ed. 18, 52 (1964). Never leave distillations unattended.

--`,,```,,,,````-`-`,,`,,`,`,,`---

Copyright National Fire Protection Association
Provided by IHS under license with NFPA
No reproduction or networking permitted without license from IHS
Not for Resale

C.11.2 Related Definitions, Laboratories. The following definitions are taken from other NFPA documents and are critical to the understanding of Chapter 11.

C.11.2.1 The following definitions are taken from NFPA 30, *Flammable and Combustible Liquids Code*.

Flammable Liquid. Any liquid that has a closed-cup flash point below 100°F (37.8°C), as determined by the test procedures and apparatus set forth in 1.7.4.1 through 1.7.4.4. Flammable liquids are classified as Class I as follows: *Class I Liquid* — any liquid that has a closed-cup flash point below 100°F (37.8°C) and a Reid vapor pressure not exceeding 40 psia (2068.6 mm Hg) at 100°F (37.8°C), as determined by ASTM D 323, *Standard Method of Test for Vapor Pressure of Petroleum Products (Reid Method).* Class I liquids are further classified as follows: (1) Class IA liquids — those liquids that have flash points below 73°F (22.8°C) and boiling points below 100°F (37.8°C); (2) Class IB liquids — those liquids that have flash points below 73°F (22.8°C) and boiling points at or above 100°F (37.8°C); (3) Class IC liquids — those liquids that have flash points at or above 73°F (22.8°C), but below 100°F (37.8°C). [**30:**3.3.25.2]

Combustible Liquid. Any liquid that has a closed-cup flash point at or above 100°F (37.8°C), as determined by the test procedures and apparatus set forth in 1.7.4.1 through 1.7.4.4. Combustible liquids are classified as Class II or Class III as follows: (1) *Class II Liquid* — any liquid that has a flash point at or above 100°F (37.8°C) and below 140°F (60°C); (2) *Class IIIA* — any liquid that has a flash point at or above 140°F (60°C), but below 200°F (93°C); (3) *Class IIIB* — any liquid that has a flash point at or above 200°F (93°C). [**30:**3.3.25.1]

C.11.2.2 The following definition is also taken from NFPA 30, *Flammable and Combustible Liquids Code*.

Flash Point. The minimum temperature of a liquid at which sufficient vapor is given off to form an ignitible mixture with the air, near the surface of the liquid or within the vessel used, as determined by the appropriate test procedure and apparatus specified in 1.7.4. [**30:**3.3.16]

C.11.2.3 The following definitions are based on NFPA 704, *Standard System for the Identification of the Hazards of Materials for Emergency Response*.

C.11.2.3.1 Health Hazard. A health hazard is any property of a material that, either directly or indirectly, can cause injury or incapacitation, either temporary or permanent, from exposure by contact, inhalation, or ingestion. Table C.11.2.3.1 is extracted from NFPA 704 and defines degrees of health hazard.

Table C.11.2.3.1 Degrees of Health Hazards

Degree of Hazard*	Criteria
4 — Materials that, under emergency conditions, can be lethal.	Gases whose LC_{50} for acute inhalation toxicity is less than or equal to 1000 parts per million (ppm). Any liquid whose saturated vapor concentration at 20°C (68°F) is equal to or greater than ten times its LC_{50} for acute inhalation toxicity, if its LC_{50} is less than or equal to 1000 ppm. Dusts and mists whose LC_{50} for acute inhalation toxicity is less than or equal to 0.5 milligrams per liter (mg/L). Materials whose LD_{50} for acute dermal toxicity is less than or equal to 40 milligrams per kilogram (mg/kg). Materials whose LD_{50} for acute oral toxicity is less than or equal to 5 mg/kg.
3 — Materials that, under emergency conditions, can cause serious or permanent injury.	Gases whose LC_{50} for acute inhalation toxicity is greater than 1000 ppm but less than or equal to 3000 ppm. Any liquid whose saturated vapor concentration at 20°C (68°F) is equal to or greater than its LC_{50} for acute inhalation toxicity, if its LC_{50} is less than or equal to 3000 ppm and that does not meet the criteria for degree of hazard 4. Dusts and mists whose LC_{50} for acute inhalation toxicity is greater than 0.5 mg/L but less than or equal to 2 mg/L. Materials whose LD_{50} for acute dermal toxicity is greater than 40 mg/kg but less than or equal to 200 mg/kg. Materials that are corrosive to the respiratory tract. Materials that are corrosive to the eye or cause irreversible corneal opacity. Materials that are corrosive to skin. Cryogenic gases that cause frostbite and irreversible tissue damage.

Copyright National Fire Protection Association
Provided by IHS under license with NFPA
No reproduction or networking permitted without license from IHS
Not for Resale

Table C.11.2.3.1 *Continued*

Degree of Hazard*	Criteria
3 — Materials that, under emergency conditions, can cause serious or permanent injury	Compressed liquefied gases with boiling points at or below –55°C (–66.5°F) that cause frostbite and irreversible tissue damage. Materials whose LD_{50} for acute oral toxicity is greater than 5 mg/kg but less than or equal to 50 mg/kg.
2 — Materials that, under emergency conditions, can cause temporary incapacitation or residual injury.	Gases whose LC_{50} for acute inhalation toxicity is greater than 3000 ppm but less than or equal to 5000 ppm. Any liquid whose saturated vapor concentration at 20°C (68°F) is equal to or greater than one-fifth its LC_{50} for acute inhalation toxicity, if its LC_{50} is less than or equal to 5000 ppm and that does not meet the criteria for either degree of hazard 3 or degree of hazard 4. Dusts and mists whose LC_{50} for acute inhalation toxicity is greater than 2 mg/L but less than or equal to 10 mg/L. Materials whose LD_{50} for acute dermal toxicity is greater than 200 mg/kg but less than or equal to 1000 mg/kg. Compressed liquefied gases with boiling points between –30°C (–22°F) and –55°C (–66.5°F) that can cause severe tissue damage, depending on duration of exposure. Materials that are respiratory irritants. Materials that cause severe but reversible irritation to the eyes or lacrimators. Materials that are primary skin irritants or sensitizers. Materials whose LD_{50} for acute oral toxicity is greater than 50 mg/kg but less than or equal to 500 mg/kg.
1 — Materials that, under emergency conditions, can cause significant irritation.	Gases and vapors whose LC_{50} for acute inhalation toxicity is greater than 5000 ppm but less than or equal to 10,000 ppm. Dusts and mists whose LC_{50} for acute inhalation toxicity is greater than 10 mg/L but less than or equal to 200 mg/L. Materials whose LD_{50} for acute dermal toxicity is greater than 1000 mg/kg but less than or equal to 2000 mg/kg. Materials that cause slight to moderate irritation to the respiratory tract, eyes, and skin. Materials whose LD_{50} for acute oral toxicity is greater than 500 mg/kg but less than or equal to 2000 mg/kg.
0 — Materials that, under emergency conditions, would offer no hazard beyond that of ordinary combustible materials.	Gases and vapors whose LC_{50} for acute inhalation toxicity is greater than 10,000 ppm. Dusts and mists whose LC_{50} for acute inhalation toxicity is greater than 200 mg/L. Materials whose LD_{50} for acute dermal toxicity is greater than 2000 mg/kg. Materials whose LD_{50} for acute oral toxicity is greater than 2000 mg/kg. Materials that are essentially nonirritating to the respiratory tract, eyes, and skin.

*For each degree of hazard, the criteria are listed in a priority order based upon the likelihood of exposure.

Copyright National Fire Protection Association
Provided by IHS under license with NFPA
No reproduction or networking permitted without license from IHS
Not for Resale

C.11.2.3.2 Flammability Hazard. Flammability describes the degree of susceptibility of materials to burning. The form or condition of the material, as well as its inherent properties, affects its flammability. Table C.11.2.3.2 is extracted from NFPA 704 and defines degrees of flammability hazard.

Table C.11.2.3.2 Degrees of Flammability Hazards

Degree of Hazard	Criteria
4 — Materials that will rapidly or completely vaporize at atmospheric pressure and normal ambient temperature or that are readily dispersed in air and will burn readily.	Flammable gases. Flammable cryogenic materials. Any liquid or gaseous material that is liquid while under pressure and has a flash point below 22.8°C (73°F) and a boiling point below 37.8°C (100°F) (i.e., Class IA liquids). Materials that ignite spontaneously when exposed to air. Solids containing greater than 0.5 percent by weight of a flammable or combustible solvent are rated by the closed cup flash point of the solvent.
3 — Liquids and solids that can be ignited under almost all ambient temperature conditions. Materials in this degree produce hazardous atmospheres with air under almost all ambient temperatures or, though unaffected by ambient temperatures, are readily ignited under almost all conditions.	Liquids having a flash point below 22.8°C (73°F) and having a boiling point at or above 37.8°C (100°F) and those liquids having a flash point at or above 22.8°C (73°F) and below 37.8°C (100°F) (i.e., Class IB and Class IC liquids). Materials that on account of their physical form or environmental conditions can form explosive mixtures with air and that are readily dispersed in air. Flammable or combustible dusts with representative diameter less than 420 microns (40 mesh). Materials that burn with extreme rapidity, usually by reason of self-contained oxygen (e.g., dry nitrocellulose and many organic peroxides). Solids containing greater than 0.5 percent by weight of a flammable or combustible solvent are rated by the closed cup flash point of the solvent.
2 — Materials that must be moderately heated or exposed to relatively high ambient temperatures before ignition can occur. Materials in this degree would not under normal conditions form hazardous atmospheres with air, but under high ambient temperatures or under moderate heating could release vapor in sufficient quantities to produce hazardous atmospheres with air.	Liquids having a flash point at or above 37.8°C (100°F) and below 93.4°C (200°F) (i.e., Class II and Class IIIA liquids). Solid materials in the form of powders or coarse dusts of representative diameter between 420 microns (40 mesh) and 2 mm (10 mesh) that burn rapidly but that generally do not form explosive mixtures with air. Solid materials in a fibrous or shredded form that burn rapidly and create flash fire hazards, such as cotton, sisal, and hemp. Solids and semisolids that readily give off flammable vapors. Solids containing greater than 0.5 percent by weight of a flammable or combustible solvent are rated by the closed cup flash point of the solvent.

Copyright National Fire Protection Association
Provided by IHS under license with NFPA
No reproduction or networking permitted without license from IHS
Not for Resale

Table C.11.2.3.2 *Continued*

Degree of Hazard	Criteria
1 — Materials that must be preheated before ignition can occur. Materials in this degree require considerable preheating, under all ambient temperature conditions, before ignition and combustion can occur.	Materials that will burn in air when exposed to a temperature of 815.5°C (1500°F) for a period of 5 minutes in accordance with Annex D [of NFPA 704]. Liquids, solids, and semisolids having a flash point at or above 93.4°C (200°F) (i.e., Class IIIB liquids). Liquids with a flash point greater than 35°C (95°F) that do not sustain combustion when tested using the *Method of Testing for Sustained Combustibility*, per 49 CFR 173, Appendix H or the UN *Recommendations on the Transport of Dangerous Goods, Model Regulations*, 11th revised edition, and the related *Manual of Tests and Criteria*, 3rd revised edition. Liquids with a flash point greater than 35°C (95°F) in a water-miscible solution or dispersion with a water noncombustible liquid/solid content of more than 85 percent by weight. Liquids that have no fire point when tested by ASTM D 92, *Standard Test Method for Flash and Fire Points by Cleveland Open Cup*, up to the boiling point of the liquid or up to a temperature at which the sample being tested shows an obvious physical change. Combustible pellets with a representative diameter greater than 2 mm (10 mesh). Most ordinary combustible materials. Solids containing greater than 0.5 percent by weight of a flammable or combustible solvent are rated by the closed cup flash point of the solvent.
0 — Materials that will not burn under typical fire conditions, including intrinsically noncombustible materials such as concrete, stone, and sand.	Materials that will not burn in air when exposed to a temperature of 816°C (1500°F) for a period of 5 minutes in accordance with Annex D [of NFPA 704].

C.11.2.3.3 Reactivity (Instability) Hazards. Reactivity describes the ability of a material to chemically react with other stable or unstable materials. For purposes of this hazard identification system, the other material is water, if reaction with water releases energy. Reactions with common materials other than water can release energy violently, but are beyond the scope of this identification system.

Unstable materials are those that, in the pure state or as commercially produced, will vigorously polymerize, decompose, or condense, become self-reactive, or undergo other violent chemical changes.

Stable materials are those that normally have the capacity to resist changes in their chemical composition, despite exposure to air, water, and heat encountered in fire emergencies. Table C.11.2.3.3 is extracted from NFPA 704 and defines degrees of reactivity (instability) hazards.

C.12 Additional Information on Chapter 12.

C.12.1 Emergency Management Program Development. For those new to the emergency management field, and/or for those seeking to re-structure an existing program, a sample program development process is illustrated in Figure C.12.1.

C.12.1.1 Program Development Steps and Activities.

C.12.1.1.1 Designate the Emergency Management Committee (EMC), Identify Operating Unit Roles, and Assign Responsibilities. The EMC is a multi-disciplinary committee established to coordinate and oversee the emergency management program, and have a close relationship with the Safety Committee.

The functions of the EMC include defining the role of the organization in the community wide emergency management program; conducting/reviewing a Hazard Vulnerability Analysis (HVA) which addresses all hazards that threaten the facility; developing/reviewing Standard Operating Procedures (SOPs) that address hazards identified in the HVA; developing/reviewing the emergency operations plan and coordinate it with other health care organizations in the community wide emergency management program; assigning roles and responsibilities of operating unit managers and key operators/managers; overseeing the development and maintenance of the EMP; ensuring that all employees have received appropriate training; conducting an annual evaluation of the effectiveness of the program, and ensuring a telephone roster of key personnel responsible for critical operations is kept current.

Copyright National Fire Protection Association
Provided by IHS under license with NFPA
No reproduction or networking permitted without license from IHS
Not for Resale

Table C.11.2.3.3 Degrees of Instability Hazards

Degree of Hazard	Criteria
4 — Materials that in themselves are readily capable of detonation or explosive decomposition or explosive reaction at normal temperatures and pressures.	Materials that are sensitive to localized thermal or mechanical shock at normal temperatures and pressures. Materials that have an instantaneous power density (product of heat of reaction and reaction rate) at 250°C (482°F) of 1000 W/mL or greater.
3 — Materials that in themselves are capable of detonation or explosive decomposition or explosive reaction, but that require a strong initiating source or that must be heated under confinement before initiation.	Materials that have an instantaneous power density (product of heat of reaction and reaction rate) at 250°C (482°F) at or above 100 W/mL and below 1000 W/mL. Materials that are sensitive to thermal or mechanical shock at elevated temperatures and pressures.
2 — Materials that readily undergo violent chemical change at elevated temperatures and pressures.	Materials that have an instantaneous power density (product of heat of reaction and reaction rate) at 250°C (482°F) at or above 10 W/mL and below 100 W/mL.
1 — Materials that in themselves are normally stable, but that can become unstable at elevated temperatures and pressures.	Materials that have an instantaneous power density (product of heat of reaction and reaction rate) at 250°C (482°F) at or above 0.01 W/mL and below 10 W/mL.
0 — Materials that in themselves are normally stable, even under fire conditions.	Materials that have an instantaneous power density (product of heat of reaction and reaction rate) at 250°C (482°F) below 0.01 W/mL. Materials that do not exhibit an exotherm at temperatures less than or equal to 500°C (932°F) when tested by differential scanning calorimetry.

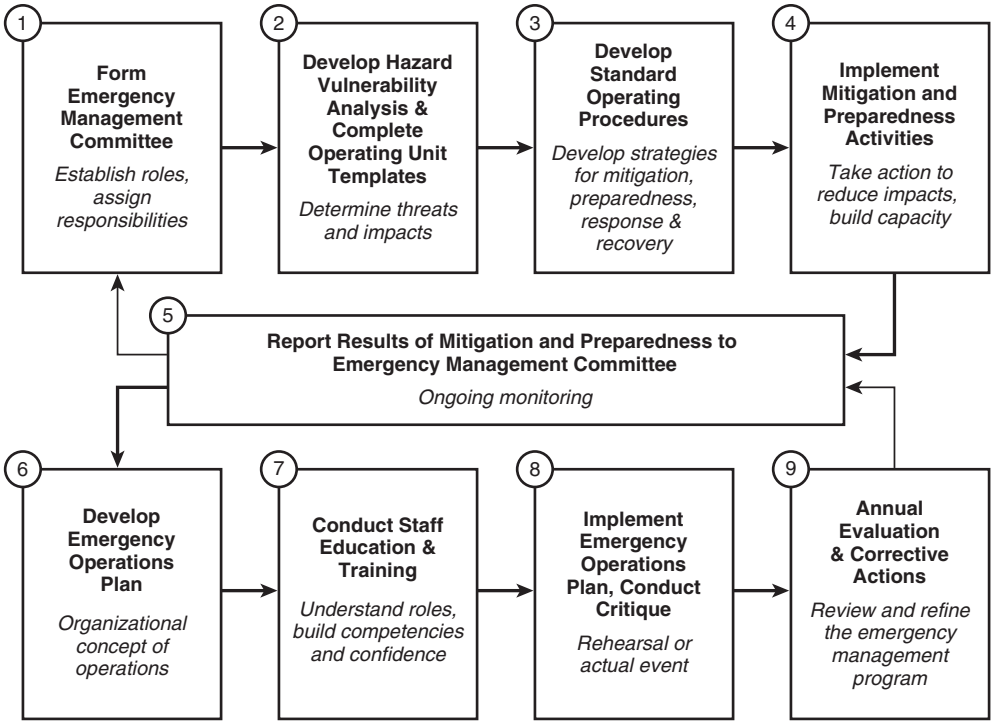

FIGURE C.12.1 Emergency Management Program Development Process.

Copyright National Fire Protection Association
Provided by IHS under license with NFPA
No reproduction or networking permitted without license from IHS
Not for Resale

C.12.1.1.2 Conduct a Hazard Vulnerability Analysis (HVA) and Complete Operating Unit Templates. The HVA is a systematic approach to assessing the probability and consequence of hazards, threats and events that might affect the continued operation of the health care facility and surrounding community. Figure C.12.1.1.2(a) illustrates a sample HVA format.

The emergency management committee oversees the HVA process to ensure that all major threats to the facility are accounted for and assessed. Input to the HVA by operating unit managers is very important. Once a list of priority hazards, threats and events has been compiled, managers should complete an operating unit template for their particular service or department. Some threats to individual operating units are so severe that they might interrupt the continuity of critical operations in the facility. The operating unit template is a unit-level contingency plan, useful in staff education, drills, and actual events. Figure C.12.1.1.2(b) shows a sample operating unit template.

C.12.1.1.3 Review the Hazard Vulnerability Analysis (HVA) and Determine Priorities for Developing Standard Operating Procedures (SOPs). Using the input submitted by operating unit managers, the committee must prioritize threats/events and develop a list of SOPs that must be developed to address those hazards. Figure C.12.1.1.3 displays a sample Standard Operating Procedure format.

C.12.1.1.4 Implement Mitigation and Preparedness Strategies. Using the SOPs developed for prioritized threats/events, develop and implement actions that will eliminate or reduce the impact of adverse events to the facility and build capabilities to manage them. The committee should review the SOPs to identify resources needed for mitigation and preparedness, develop cost estimates or resources required, and submit the resource request to the Director for funding. The committee is responsible for tracking mitigation and preparedness planning activities until completed.

C.12.1.1.5 Report Results of Mitigation and Preparedness Activities to the Emergency Management Committee. Operating unit managers and the emergency program coordinator should regularly report results of mitigation and preparedness activities to the committee. Reports should include mitigation activities taken that effectively reduced or eliminated adverse impacts to the facility; mitigation activities that did not reduce or eliminate adverse impacts to the facility operation; and recommendations for mitigation and preparedness activities, budget, and timelines.

C.12.1.1.6 Develop, Publish and Distribute the Emergency Operations Plan (EOP). NFPA 1600, *Standard on Disaster/Emergency Management and Business Continuity Programs*, Section 3.6, describes four types of planning: strategic administrative (preparedness) planning, mitigation planning, recovery planning, and emergency operations planning.

The Federal Emergency Management Agency, now part of the Department of Homeland Security, issues guidance on the development of emergency operations plans, or EOPs. The EOP is designed to address all hazards and it accomplishes this through its organization by functions, not departments, hazards, or individuals. Flexibility is a key feature of this type of format, as only the functions needed to address the problems are activated, not the entire plan. This type of EOP format (a Basic Plan and Functional Annexes) is that used by communities, states, and the Federal Response Plan. *(See Annex G, Informational References.)*

C.12.1.1.7 Train Staff on the Emergency Operations Plan (EOP). See 12.3.3.8.

C.12.1.1.8 Test and Evaluate the Emergency Operations Plan in Response to a Drill or Actual Event. See 12.3.3.9.

C.12.1.1.9 Conduct an Annual Review of the Effectiveness of the Emergency Management Program. See NFPA 1600 for additional information on program evaluation and corrective actions.

C.12.2 Personnel Notification and Recall. Medical staff, key personnel, and other personnel needed will be notified and recalled as required. In order to relieve switchboard congestion, it is desirable to utilize a pyramidal system to recall individuals who are off duty or otherwise out of the facility. Under the pyramidal system, an individual who has been notified will notify two other individuals, who in turn will each notify two other individuals, and so on. A current copy of the notification and recall roster, with current home and on-call telephone numbers, will be maintained at the hospital switchboard at all times. In case the pyramidal system is to be utilized, each individual involved in the system has to maintain a current copy of the roster at all times, in order that each knows whom they are to notify and the telephone numbers concerned. It is essential that key personnel rosters be kept current.

C.12.3 Special Considerations and Protocols.

C.12.3.1 Fire and Explosion. In the event that the health care facility need not be completely evacuated immediately, the actions staff should take when they are alerted to a fire are detailed in Sections 18.7, 19.7, 20.7, and 21.7 of NFPA *101, Life Safety Code.*

C.12.3.2 Severe Storm. The warning system operated by the National Oceanic and Atmospheric Administration will, in most cases, provide adequate time to permit the health care facility to take certain precautions, and if disaster appears inevitable, to activate the Health Care Emergency Management Plan in advance of the disaster event. Assuming evacuation is not feasible, some precautions include the following:

(1) Draw all shades and close all drapes as protection against shattering glass.
(2) Lower all patient beds to the low position, wherever possible.
(3) Place blankets on patients/residents.
(4) Close all doors and windows.
(5) Bring indoors those lawn objects that could become missiles.
(6) Remove all articles from window ledges.
(7) Relocate patients/residents to windowless hallways or rooms.

C.12.3.3 Evacuation. Evacuation can be partial or total. It might involve moving from one story to another, one lateral section or wing to another, or moving out of the structure. Even partial evacuations can involve all categories of patients; where these are people who would not routinely be moved, extraordinary measures might be required to support life. It is also necessary to ensure movement of supplies in conjunction with any evacuation. Decisions to evacuate might be made as a result of internal problems or under menace of engulfing external threats. In all cases, the following considerations govern:

(1) Move to pre-designated areas, whether in the facility, nearby, or in remote zones. Evacuation directives will normally indicate destinations. Note that it is recommended to predesign a mutual aid evacuation plan with other health care facilities in the community. *(See Annex G, U.S. Government Publication 3152, Hospitals and Community Emergency Response–What you Need to Know, on the subject of health care community mutual aid and evacuation planning.)*

Copyright National Fire Protection Association
Provided by IHS under license with NFPA
No reproduction or networking permitted without license from IHS
Not for Resale

	Severity Classification — Low, Moderate, High				
	Probability	Human Impact	Property Impact	Operational Impact	Rank
Type of Event	*Likelihood this will occur within 1 year*	*Possibility of death or injury*	*Physical losses and damage*	*Interruption of services*	*Score of 2 or higher in any category requires a SOP*
Score	*0 = N/A 1 = Low 2 = Moderate 3 = High*	*0 = N/A 1 = Low 2 = Moderate 3 = High*	*0 = N/A 1 = Low 2 = Moderate 3 = High*	*0 = N/A 1 = Low 2 = Moderate 3 = High*	*SOP required — yes or no?*
(hazard type)					

© 2005 National Fire Protection Association NFPA 99 (p. 1 of 1)

FIGURE C.12.1.1.2(a) Sample Hazards Vulnerability Analysis (HVA) Format.

Copyright National Fire Protection Association
Provided by IHS under license with NFPA
No reproduction or networking permitted without license from IHS
Not for Resale

Operating Unit: _____ Operating Unit Manager: _____

Mission Critical System	Potential Problems	Contact for Assistance in Preparing	Mitigation Actions	If this mission critical system is interrupted, then: Assess situation for:	Action required:
(Lighting)					
(Electrical Power)					
(Steam Distribution)					
(HVAC)					
(Room or Hood Exhaust)					
(Water Delivery)					
(Waste Stream)					
(Communications)					

© 2005 National Fire Protection Association NFPA 99 (p. 1 of 1)

FIGURE C.12.1.1.2(b) Sample Operating Unit Template.

Copyright National Fire Protection Association
Provided by IHS under license with NFPA
No reproduction or networking permitted without license from IHS
Not for Resale

_____
(Name of facility)

Standard Operating Procedure #: _____ _____
(Date)

SUBJECT: _____
(Insert Hazard, Threat, or Event Name)

1. Description of hazard, threat, or event: _____

2. Impact on mission critical systems: _____

3. Operating units and key personnel with responsibility: _____

4. Mitigation and Preparedness Activities
   a. Hazard reduction strategies and resource issues: _____
   b. Preparedness strategies and resource issues: _____

5. Response and Recovery Activities
   a. Hazard control strategies and resource issues: _____
   b. Hazard monitoring strategies: _____
   c. Recovery strategies and resource issues: _____

6. Notification Procedures
   a. Internal: _____
   b. External: _____

7. Specialized staff training: _____

8. References and further assistance: _____

9. Review date: _____

_____ _____
(Name) (Position/Title)

© 2005 National Fire Protection Association (NFPA 99, p. 1 of 1)

FIGURE C.12.1.1.3 Sample Standard Operating Procedure Format.

--`,,```,,,,````-`-`,,`,,`,`,,`---

Copyright National Fire Protection Association
Provided by IHS under license with NFPA
No reproduction or networking permitted without license from IHS
Not for Resale

(2) Ensure movement of equipment, supplies, and medical records to accompany or meet patients and staff in the new location.
(3) Execute predetermined staffing plans. Some staff will accompany patients; others will rendezvous in the new location. Maintenance of shifts is more complex than normal, especially when some hard-to-move patients stay behind in the threatened location, and when staff might be separated from their own relocated families.
(4) Protection of patients and staff (during and after movement) against the threatening environment has to be provided.
(5) Planning has to consider transportation arrangements and patient tracking.

C.12.3.4 High Profile. Admission of a high-profile person to a health care facility in an emergency creates two sets of problems that might require partial activation of the Health Care Emergency Management Plan. These problems are security and reception of news media.

C.12.3.4.1 Security. Provision of security forces in this situation might be provided by a governmental agency or private security forces. However, activation of facility security forces might be required to prevent hordes of curious onlookers from entering facility work areas and interfering with routine facility functioning. Routine visiting privileges and routine visiting hours might need to be suspended in parts of the facility.

C.12.3.4.2 Reception of News Media. The news media reception plans will need to be activated. In this instance, additional communications to the news reception center will be required. Additional telephones and telephone lines can be installed on an emergency basis on request to the local telephone company.

C.12.3.5 Other Protocols as Deemed Desirable. These should follow a number of additional protocols for internal disasters, to be determined by the hazards vulnerability analysis.

C.12.3.6 Activation of Emergency Utility Resources. In the planning phase, backup utility resources will have been stockpiled and arrangements made for mutual aid when required. Such utilities include electrical power, water, and fuel. Through prior coordination with the local office of emergency preparedness or fire department, mobile generators and auxiliary pumps can be obtained in the internal disaster situation. Through these same sources arrangements could be made to supply water tank trucks. Obviously, such planning is in addition to routine planning, in which all health care facilities maintain emergency electrical power and, in those areas requiring central heating in winter, backup supplies of oil, coal, or gas. Priorities for use of available power (e.g., air circulation but not air conditioning) have to be determined. Sanitation requirements can become overriding in prolonged disasters, and even an ordinary strike by garbage collectors can cause difficulties.

C.12.3.7 Civil Disturbance. Large-scale civil disturbances in recent years have shown that health care facilities and their personnel are not immune to the direct effects of human violence in such disturbances. Hospitals in large urban areas have to make special provisions in their disaster plans to ensure the physical safety of their employees in transit from the hospital exit to and from a secure means of transportation to their homes. In extreme cases it might be necessary to house employees within the health care facility itself during such civil disturbances. Examples of direct attacks or sniping are extremely rare.

Another aspect of civil disturbances not to be overlooked in facility security planning is the possibility that a given health care facility might have to admit and treat large numbers of prisoners during such emergencies; however, security guards for such patients will normally be provided by the local police department.

C.12.3.8 Bomb Threats. The disaster potential inherent in the telephoned bomb threat warrants inclusion of this disaster contingency in the Health Care Emergency Management Plan. Experience has shown that facility personnel have to accompany police or military bomb demolition personnel in searching for the suspected bomb, because speed is of the essence and only individuals familiar with a given area can rapidly spot unfamiliar or suspicious objects or condition in the area. This is particularly true in health care facilities. The facility switchboard operator has to be provided with a checklist to be kept available at all times, in order to obtain as much information as possible from the caller concerning the location of the supposed bomb, time of detonation, and other essential data, which have to be considered in deciding whether or not to evacuate all or part of the facility.

C.12.3.9 Radioactive Contamination. Emergency management planning has to consider the possibility of radioactive materials being released from nuclear reactors or transportation accidents, acts of terrorism, as well as from internal spills. These incidents could require that health care staff and patients be sheltered. Shelter areas can be selected in existing structures and should be planned for during the design of new facilities or additions. Similarly, plans also have to consider radiation dose control and decontamination of victims or staff personnel and public safety in connection with nuclear accidents or incidents such as reactor excursions.

C.12.3.10 Hazardous Materials. There are at least three major sources of concern with regard to nonradioactive hazardous materials not related to the intentional use of chemical agents to harm people (*see Weapons of Mass Destruction, C.12.3.12*). The first is the possibility of a large spill or venting of hazardous materials near the facility; this is especially likely near major rail or truck shipping routes, near pipelines, or near heavy manufacturing plants. Second, every facility contains within its boundaries varying amounts of such materials, especially in the laboratory and custodial areas. A spill of a highly volatile chemical can quickly contaminate an entire structure by way of the air ducts. Finally, contaminated patients can pose a risk to staff, though on a more localized basis. Usually removal of their clothing will reduce the risk materially. In any case, staff has to be prepared to seek advice on unknown hazards. This type of advice is not usually available from poison centers, but rather from a central referral, such as CHEMTREC, and its toll-free emergency information service number (800-424-9300).

See Annex G for publications concerning hazardous materials regulations and reports on various types of chemical protective equipment.

C.12.3.11 Volcanic Eruptions. Although most of the direct effects of a volcanic eruption are covered in other protocols for disasters (fire, explosion, etc.), it is necessary to make special provisions for functioning in areas of heavy to moderate ash fall. This hazard can exist hundreds of miles downwind from the eruption.

Volcanic ash is actually finely pulverized rock blown out of the volcano. Outside the area of direct damage, the ash varies from a fine powder to a coarse sand. General housekeeping

Copyright National Fire Protection Association
Provided by IHS under license with NFPA
No reproduction or networking permitted without license from IHS
Not for Resale

measures can exclude much ash. It should be noted, however, that people move about freely during and after ash fall.

Ash fall presents the following four problems for health care facilities:

(1) People require cleanup (brushing, vacuuming) before entering the building.
(2) Electromechanical and automotive equipment and air-filtering systems require special care because of the highly abrasive and fine penetration nature of the ash.
(3) Increased flow of patients with respiratory complaints can be expected.
(4) Eye protection is required for people who have to be out in the dust. (No contact lenses should be worn; goggles are suggested.) Dust masks are available that are approved by the National Institute for Occupational Safety and Health (NIOSH) and are marked TC-21 plus other digits.

C.12.3.12 Weapons of Mass Destruction. Weapons of Mass Destruction or WMD are defined as any weapon or device that is intended, or has the capability, to cause death or serious bodily injury to a significant number of people through the release, dissemination, or impact of: toxic or poisonous chemicals or their precursors; a disease organism; or radiation or radioactivity. A complete index of chemical, biological, and radiological agents and treatment recommendations can be found at the following web site: http://www.bt.cdc.gov/agent/index.asp.

Many federal departments and agencies are involved in supporting WMD preparedness and response activities at the State and local level. The Department of Health and Human Services manages two cooperative grant programs administered by the Centers for Disease Control and Prevention (CDC) and the Health Resources Services Administration (HRSA). These programs are aimed at enhancing the readiness of the public health and hospital system *(see the following web link for a description of these initiatives: http://www.bt.cdc.gov/planning/continuationguidance/pdf/activities_attachments.pdf.)*

The Department of Justice maintains a help line (1-800-368-6498) offering technical assistance in nonemergency cases providing information on the following subjects: detection equipment; personal protective equipment; decontamination systems and methods; physical properties of WMD materials; signs and symptoms of WMD exposure; treatment of exposure to WMD materials; toxicology information; federal response assets; and applicable laws and regulations. For reporting actual or potential acts of terrorism, health care facilities should contact their local or state health departments. The National Response Center (1-800-424-8802) can link callers to technical experts.

See Annex G for publications relating to WMD preparedness for health systems.

C.13 Additional Information on Chapter 13.

C.13.1 Nature of Hazards — Anesthetizing Locations.

C.13.1.1 General. The environment of the modern operating room poses numerous hazards, even in those rooms in which flammable agents are prohibited.

C.13.1.2 Hazards Present in All Anesthetizing Locations.

C.13.1.2.1 Electric Shock and Spark Hazards — High-Frequency Burn.

C.13.1.2.1.1 When a human body becomes the connecting link between two points of an electric system that are at different electric potentials, the person is likely to suffer an electric shock or high-frequency burns. When there is a highly conductive pathway from outside the body to the heart or great vessels, small electric currents could cause ventricular fibrillation. If a conductive material bridges two points of an electric system that are different electric potentials, the contact is likely to create a spark or an arc and intense heating of one or more of the conductors involved.

C.13.1.2.1.2 Electric equipment that is defective or has a faulty ground produces a definite shock hazard if connected to conventional grounded electric circuits and employed in the presence of purposely conductive flooring, as installed in corridors adjacent to operating rooms, or wet flooring as might be encountered in sterilizing or scrub rooms during use.

C.13.1.2.1.3 Improper use of the high-frequency electrosurgical unit, alone or in combination with certain items of medical monitoring equipment, can cause serious high-frequency burns to the patient or to personnel. *(See Annex D, The Safe Use of High-Frequency Electricity in Health Care Facilities.)*

C.13.1.2.2 Toxicologic Hazards.

C.13.1.2.2.1 The use of some modern nonflammable inhalation anesthetic agents with high-flow techniques and in the absence of venting of the exhaled gases to the atmosphere can create low-grade toxicity in personnel who work regularly in the operating room *(see E.3.5)*.

C.13.1.2.3 Mechanical Hazards.

C.13.1.2.3.1 A large amount of energy is stored in a cylinder of compressed gas. If the valve of a cylinder is struck (or strikes something else) hard enough to break off the valve, the contents of the cylinder can be discharged with sufficient force to impart dangerous reactive movement to the cylinder.

C.13.1.2.3.2 A hazard exists when hospital personnel attempt to transfer the contents of one compressed gas cylinder into another.

C.13.1.3 Hazards Related to the Use of Flammable Substances.

C.13.1.3.1 Flammable Anesthetic Agents.

C.13.1.3.1.1 The use of flammable anesthetic agents is attended by considerable fire and explosion risk because these agents form flammable mixtures with air, oxygen, or nitrous oxide. In many cases, these mixtures are violently explosive. Fatal accidents have resulted from explosions of such mixtures during anesthesia.

C.13.1.3.1.2 The following inhalation agents are considered flammable during conditions of clinical use in anesthesia: cyclopropane, diethyl ether, ethyl chloride, and ethylene.

The flammability of a compound can be reduced by substitution of a halogen (fluorine, chlorine, or bromine) for hydrogen at one or more positions in the molecular structure. Several inhalational anesthetics are thus halogenated. Halogenated agents are not necessarily nonflammable under all conditions.

Conflicting reports in the literature as to flammability limits probably represent differences in experimental techniques. Both the nature of the source of ignition and the configuration of the test chamber are critical. Some agents can be ignited only under optimal conditions never duplicated in clinical anesthesia. In one study, ignition of chloroform in oxygen could be obtained only in a closed steel bomb with a fuse producing an ignition temperature of 1093°C to 1649°C

--`,,```,,,,````-`-`,,`,,`,`,,`---

Copyright National Fire Protection Association
Provided by IHS under license with NFPA
No reproduction or networking permitted without license from IHS
Not for Resale

(2000°F to 3000°F) and with a chloroform concentration of 20 percent to 25 percent.

Trichloroethylene, used in concentrations higher than recommended, is flammable in oxygen and nitrous oxide. Methoxyflurane is nonflammable in concentrations obtainable at room temperature; however, a heated vaporizer can produce flammable mixtures.

Halothane, enflurane, and isoflurane are nonflammable under almost all conditions encountered in clinical anesthesia. High concentrations of nitrous oxide increase the range of flammability. Given laboratory conditions employing a closed tube, zero humidity, and sufficient ignition energy (far greater than that obtainable from incidental static electricity) it is possible to ignite a mixture of 4.75 percent halothane in 30 percent oxygen provided the balance of the atmosphere is nitrous oxide. If the oxygen concentration in a mixture with nitrous oxide is allowed to fall to 20 percent, 3.25 percent halothane is flammable. In these same nitrous oxide-oxygen atmospheres, the corresponding minimal flammable concentrations of enflurane are 5.75 percent and 4.25 percent, respectively, and of isofluorane, 7.0 percent and 5.25 percent. *(See Cruice, 1974.)*

The fact that halothane has for years been widely employed without significant problems relating to flammability suggests that the data in the preceding paragraph are of more theoretical than practical concern.

C.13.1.3.1.3 The use of closed rebreathing systems for the administration of flammable anesthetic agents normally tends to restrict the region likely to be hazardous. To secure a reasonable measure of protection, however, it has been found necessary to apply certain basic safeguards in any room in which these agents are used.

C.13.1.3.2 Flammable Medicaments, Including Aerosol Products.

C.13.1.3.2.1 Medicaments, including those dispersed as aerosols, frequently are used in anesthetizing locations for germicidal purposes, for affixing plastic surgical drape materials, for preparation of wound dressings, or for other purposes.

C.13.1.3.2.2 A particular hazard is created if cautery or high-frequency electrosurgical equipment is employed following use of a flammable medicament for preparation of the skin *(see C.13.1.3.2.1)*, since the liquid remaining on the skin or vapors pocketed within the surgical drapes can be ignited.

C.13.1.3.3 Sources of Ignition.

C.13.1.3.3.1 Potential sources of ignition of flammable anesthetics in anesthetizing locations include all of the following:

(1) Fixed electric equipment
(2) Portable electric equipment
(3) Accumulation of static electricity
(4) Electrosurgical equipment
(5) Open flames and heated objects above the ignition temperature of the flammable gases in use.

Other potential sources of ignition are percussion sparks, ignition of oxidizing and flammable gases from accidental mixing under pressure (9.3.9), and ignition from improper handling of oxygen cylinders (9.4.3.3, 9.4.3.5, and 9.7.2).

The Technical Committee on Anesthesia Services is cognizant of suggestions that the detonation of ether peroxides formed by the oxidation of ether over a period of time can be a cause of explosions in anesthesia machines. Frequent emptying of the ether bottle and cleaning of the ether evaporator inside anesthetizing locations is a simple and desirable precaution.

Many types of hospital construction afford reasonable protection against lightning hazards. However, because of the storage and use of combustible anesthetic agents, the increased protection offered by the installation of lightning rods might be desirable for some types of buildings, particularly those of wood (frame) construction in outlying areas. Lightning protection, if installed, should conform to the requirements of NFPA 780, *Standard for the Installation of Lightning Protection Systems.*

C.13.1.3.3.2 Experience indicates that the ignition of flammable mixtures by electrostatic spark is a great hazard. Electrostatic charges can accumulate on personnel and metallic equipment. Electrostatic charges can set up dangerous potential differences only when separated by materials that are electrically nonconducting. Such insulators act as barriers to the free movement of such charges, preventing the equalization of potential differences. A spark discharge can take place only when there is no other available path of greater conductivity by which this equalization can be effected. Such a spark can ignite a flammable mixture of gases.

C.13.1.3.3.3 In many cases, the hazards of electric shock and electrostatic discharge coexist. Measures to mitigate one hazard might enhance the other, however. It is necessary, therefore, to weigh both hazards in recommending precautionary measures for either.

C.13.1.3.3.4 An obvious and, hence, less frequent cause of the ignition of flammable anesthetic agents is by open flame or hot materials at or above the ignition temperature of the agents. The lowest ignition temperature in air of any of the anesthetic agents mentioned in C.13.1.3.1.2 is that of diethyl ether: 180°C (365°F). The most effective safeguard against this source of ignition is a constant vigilance on the part of the operating room personnel to prevent the introduction of sources of flames and hot objects into the anesthetizing locations *(see 13.4.1.2.3)*.

C.13.1.4 Hazards that Can Be Present in Nonflammable Anesthetizing Locations.

C.13.1.4.1 Electrostatic Hazard.

C.13.1.4.1.1 Conductive flooring is not a requirement for nonflammable anesthetizing locations. The uncontrolled use of static-producing materials in such locations, however, can lead to any of the following:

(1) Electrostatic discharge through sensitive components of electronic equipment, causing equipment failure
(2) Inadvertent use of these materials in flammable anesthetizing locations where mixed facilities exist *(see definition of Mixed Facility in E.1.6)*
(3) Impaired efficiency because of electrostatic clinging
(4) The involuntary movement of personnel subject to electrostatic discharges

C.13.1.4.2 Hazard of Flammable Substances.

C.13.1.4.2.1 Nonflammable anesthetizing locations are neither designed nor equipped for the use of any flammable substances, be they inhalation anesthetic agents or medicaments containing benzene, acetone, or the like. A hazardous situation is created any time any such flammable substance is inadvertently or intentionally introduced into a nonflammable anesthetizing location *(see also C.13.1.3.2)*.

Copyright National Fire Protection Association
Provided by IHS under license with NFPA
No reproduction or networking permitted without license from IHS
Not for Resale

C.13.1.5 Hazards that Can Be Present in Mixed Facilities.

C.13.1.5.1 Mixed facilities contain both flammable and nonflammable anesthetizing locations. Movable furniture, portable equipment, and conductive accessories intended for sole use in nonflammable anesthetizing locations might be introduced inadvertently into a flammable anesthetizing location, with the attendant dangers of ignition of flammable gas mixtures from electrical or electrostatic sparks.

C.13.1.5.2 Personnel working in mixed facilities might not take the proper precautions in reference to wearing apparel and the use of conductive grounding devices when entering flammable anesthetizing locations.

C.13.1.5.3 A particular hazard exists if regulations *(see E.8)* are not adopted, posted, and complied with or if the anesthetizing locations are not identified as noted in E.6.7.5.

C.13.2 Related Hazards and Safeguards, Anesthetizing Locations.

C.13.2.1 General.

C.13.2.1.1 The gas anesthesia apparatus and anesthetic ventilators constitute essential items (in most cases) for the administration of inhalation anesthesia. The safe use of these devices is predicated upon their cleanliness and proper function, as well as an understanding of their proper operation, maintenance, and repair.

C.13.2.2 Selection of a Gas Anesthesia Apparatus.

C.13.2.2.1 The individual selecting a gas anesthesia apparatus, either for initial purchase or for application in a given case, should be certain that the apparatus is the proper one for the given application or applications and that it is in good repair. See C.13.2.3, Suggested Method for Ensuring Proper Delivery of Oxygen and Nitrous Oxide; C.13.2.4, Disposable Masks, Bags, Tubing, and Bellows; and C.13.2.5, Decontamination and Routine Cleaning of Reusable Items.

C.13.2.3 Suggested Method for Ensuring Proper Delivery of Oxygen and Nitrous Oxide.

C.13.2.3.1 This method is recommended to prevent delivery of a gas different from that indicated by the flowmeters and to detect mixing of gases inside the machine that can result in delivery of dangerous gas mixtures to the patient. Both of the following materials are needed:

(1) 91.5 cm (3 ft) of anesthesia delivery hose
(2) An accurate oxygen meter, analyzer, or detector *(see 9.5.1)*. This device can be of the paramagnetic, platinum electrode, gas chromatographic, or mass spectrometer type.

C.13.2.3.2 Detailed steps of a method of testing anesthesia machines to assure the absence of hazard due to crossed connections between oxygen and nitrous oxide follow.

C.13.2.3.2.1 Premises. It is reasonable to conclude that no hazardous cross-connections or cross-leakages are present if gas from the only source available is delivered by only those valves intended for that gas, and that no gas is delivered by those valves when their intended source is unavailable, but other sources are available.

It is not necessary to know the composition of a gas in order to determine the extent of the circuit it supplies.

The operation of the oxygen circuit is independent, but the operation of some or all of the other circuits might be at least partially dependent on the operability of the oxygen circuit, for example, fail-safe valves.

C.13.2.3.2.2 Method. All anesthesia machines have at least one source of oxygen. This can be a large cylinder, one or two small cylinders, or a pipeline supply. Some machines have two such sources, and a very few have all three. Each should be tested separately. Proceed as follows:

(1) Disconnect all gas sources and open all needle valves and flush valves until all gas has stopped flowing from the machine outlet. Then close all needle valves and flush valves. Be certain that all cylinder pressure gauges read zero. Connect an oxygen cylinder to an oxygen hanger yoke and open the cylinder valve. Pressure must rise in the corresponding oxygen pressure gauge only. Close the cylinder valve.
(2) Repeat Step (1) exactly for each oxygen hanger yoke, including any fed by high-pressure lines from large cylinders. Leave the cylinder in the last hanger yoke tested, with the cylinder valve open.
(3) Open in succession and leave open all the needle valves for gases other than oxygen. Briefly open any flush valve for a gas other than oxygen. No flow should occur at the machine outlet. An easy way to test for gas flow is to simply place the machine outlet tube in a glass of water and observe bubbling. Stand clear when flush valves are operated.
(4) Open and close in succession each of the oxygen needle valves, including any that provide an independent source of oxygen for vaporizers, and the oxygen flush valve. Flow should occur at the associated flowmeter or the machine outlet each time a valve is opened.
(5) If the machine is equipped for a pipeline oxygen supply, close the oxygen cylinder valve and open the oxygen flush valve. When gas stops flowing at the machine outlet, close the flush valve and all needle valves and connect the oxygen pipeline inlet to an oxygen pipeline outlet with the oxygen supply hose. Then repeat Steps (3) and (4).
(6) Since it is now established that oxygen is delivered to the oxygen needle and flush valves, and is not delivered to any other needle or flush valve, it remains to be determined that oxygen and oxygen alone is also available to perform any other function for which it is essential. A valve that shuts off the supply of any other gas to the appropriate needle valve in the event of oxygen supply pressure failure, commonly called a "fail-safe" valve, performs such a function. It should be tested as follows:
    (a) Disconnect the pipeline supply and open the oxygen flush valve until flow stops at the machine outlet, then close the flush valve. Install a cylinder of nitrous oxide in one hanger yoke, open the cylinder valve, and note the pressure on all cylinder pressure gauges. Only the nitrous oxide gauge should show any pressure.
    (b) Open in succession and leave open all the needle valves for gas other than nitrous oxide. Briefly open any flush valve for a gas other than nitrous oxide. No flow should occur at the machine outlet, nor at any flowmeter.
    Note that an easy way to test for gas flow is to simply place the machine outlet tube in a glass of water and observe bubbling. Stand clear when flush valves are operated.
    (c) Open and close in succession each of the nitrous oxide needle valves and nitrous oxide flush valves. If any delivers flow, all should do so.

Copyright National Fire Protection Association
Provided by IHS under license with NFPA
No reproduction or networking permitted without license from IHS
Not for Resale

(d) If neither the nitrous oxide needle valves nor the nitrous oxide flush valve delivers flow, open the oxygen cylinder valve and repeat Steps (b) and (c). Each nitrous oxide needle valve and flush valve should deliver flow to the machine outlet.
(e) Close the nitrous oxide cylinder valve and open a nitrous oxide needle valve until all gas stops flowing, then remove the nitrous oxide cylinder and close the needle valve. Repeat Steps (a) through (d) using any other nitrous oxide yoke.
(f) If the machine is equipped for a pipeline nitrous oxide supply, close the nitrous oxide cylinder valve and open a nitrous oxide needle valve until all gas stops flowing, then close all needle valves and flush valves. Connect the nitrous oxide pipeline inlet to a nitrous oxide pipeline outlet with the nitrous oxide supply hose. Then repeat Steps (b) through (d).

C.13.2.4 Disposable Masks, Bags, Tubing, and Bellows.

C.13.2.4.1 It is well-recognized that newer technologies often lead to the introduction of new equipment and techniques, which in turn might lead to new hazards, or the potentiation of old ones. For example, the use of disposable and nondistensible conductive accessories potentiate the hazards of excessive airway pressures. These components should be employed only when it is assured that system pressure cannot become excessive.

C.13.2.4.1.1 Many plastic items are combustible. Most of these materials will emit toxic compounds when subjected to thermal decomposition. Special care has to be exercised during storage, use, and disposal of these items in order to preclude accidental ignition. Due consideration has to be given to on-site storage of trash prior to removal from the operating suite. The presence of these items on the hospital premises contributes significantly to the solid waste disposal problem facing the modern hospital.

C.13.2.4.1.2 The Technical Committee on Gas Delivery Equipment recommends that purchasing policies of an institution, as well as the practices of individual physicians and nurses, take into consideration the multiple problems posed by plastic items, and limit purchases and use of them to those items deemed essential for the proper function of the institution.

C.13.2.5 Decontamination and Routine Cleaning of Reusable Items.

C.13.2.5.1 Under certain circumstances, infectious organisms can be cultured from the breathing passages of ventilators, anesthesia valves, absorbers, tubing, bags, masks, and connectors. Some of these organisms can remain viable for many days. Although evidence that cross-infection from such sources can and does occur is very scanty, it is suggested that the user of such equipment consider implementation of one of the following methods. Mechanical cleansing with soap and water should precede sterilization. Alternative approaches to routine cleansing include the following:

(1) Mechanical cleansing with soap and water, followed by air drying in a stream of compressed air
(2) Mechanical cleansing with soap and water, followed by exposure to a preparation such as dialdehyde solution
(3) Mechanical cleansing with soap and water, followed by ethylene oxide, steam, or dry heat sterilization

C.13.2.5.2 Following gross contamination, the step outlined in C.13.2.5.1(2) or C.13.2.5.1(3) should be employed.

Note that whenever ethylene oxide or dialdehyde is used, care has to be taken to ensure complete removal of residuals.

Also note that recommendations for cleansing and sterilization supplied by the manufacturer of the item of equipment should be followed.

C.13.2.5.2.1 External contamination of the gas anesthesia apparatus, ventilator, and other equipment employed on and around the patient at least at weekly intervals, as well as immediately after use in an infectious case, is likewise recommended.

C.13.3 Text of Suggested Signs and Posters for Inhalation Anesthetizing Locations. See Figure C.13.3.

C.13.4 Suggested Procedures in the Event of a Fire or Explosion, Anesthetizing Locations.

C.13.4.1 General. Fires in hospitals pose unique problems for hospital personnel, patients, and fire service personnel. Hospitals store and use relatively large quantities of flammable and combustible substances. Oxygen-enriched atmospheres are often employed in medical therapy and are utilized routinely during administration of anesthesia. The presence of flammable and combustible substances and oxygen-enriched atmospheres under the same roof with nonambulatory patients presents an extra-hazardous situation. All hospital personnel should understand the steps to take to save life, preserve limb, and contain smoke and/or limit fire until the fire department arrives. It is recommended that the procedures delineated herein, or similar ones, become a part of the fire safety regulations of every hospital.

C.13.4.2 Steps to Take in the Event of a Fire or Explosion.

C.13.4.2.1 The following steps, listed in the approximate order of their importance, should be taken by all personnel, should fire occur. If an explosion occurs, and it is not followed by fire, follow the procedure outlined under C.13.4.2.2. If a fire follows an explosion, proceed as follows:

(1) Remove the immediately exposed patient or patients from the site of the fire, if their hair or clothing is not burning. If they are burning, extinguish the flames *(see C.13.4.4 and C.13.4.5)*.
(2) Sound the fire alarm by whatever mode the hospital fire plan provides.
Note that it is assumed that each hospital has a fire plan, prepared in consultation with representatives of the local fire department. In such a plan, immediate notification of the local fire department is essential.
(3) Close off the supply of oxygen, nitrous oxide, and air to any equipment involved, if this step can be accomplished without injury to personnel *(see C.13.4.3)*.
(4) Close doors to contain smoke and isolate fire.
(5) Remove patients threatened by the fire.
(6) Attempt to extinguish or contain the fire *(see C.13.4.4)*.
(7) Direct the fire fighters to the site of the fire.
(8) Take whatever steps are necessary to protect or evacuate patients in adjacent areas.

Note that in the event of a fire in an operating room while an operative procedure on an anesthetized patient is in progress, it might be necessary to extinguish the fire prior to removing the patient from the room.

Note also that during an operation, it can be more hazardous to move patients than to attempt to extinguish or contain the fire. The attending physician has to determine which step would present the lesser hazard — hurriedly terminating an operative procedure or continuing the procedure and exposing the members of the operating team and the patient to the hazards stemming from the fire.

--`,,```,,,,````-`-`,,`,,`,`,,`---

Copyright National Fire Protection Association
Provided by IHS under license with NFPA
No reproduction or networking permitted without license from IHS
Not for Resale

SET (1)
REGULATIONS FOR SAFE PRACTICE IN NONFLAMMABLE ANESTHETIZING LOCATIONS

The following rules and regulations have been adopted by the medical staff and administration. NFPA 99-2005, subsection 13.4.1, Anesthetizing Locations, shall apply in all inhalation anesthetizing locations.

_____ _____

(Insert Date) (Insert Name of Hospital Authority)

The use or storage of any of the following flammable agents or germicides shall be prohibited from all operating rooms, delivery rooms, and other anesthetizing locations in this hospital.

By reason of their chemical composition, these agents present a hazard of fire or explosion:

cyclopropane **ethyl chloride**
diethyl ether **ethylene**

(1) Nonflammable Anesthetizing Location.

a. *Definition*. The term *nonflammable anesthetizing location* shall mean any anesthetizing location designated for the exclusive use of nonflammable anesthetizing agents.

(2) Equipment.

a. No electrical equipment except that judged by the Engineering Department of _____ Hospital as being in compliance with NFPA 99-2005, subsection 13.4.1, Anesthetizing Locations, shall be used in any anesthetizing location.

b. When a physician wishes to use his or her personal electrical equipment, it shall first be inspected by the Engineering Department and, if judged to comply with NFPA 99-2005, subsection 13.4.1, Anesthetizing Locations, it shall be so labeled.

c. Photographic lighting equipment shall be of the totally enclosed type or so constructed as to prevent the escape of sparks or hot metal particles.

(3) Personnel.

Smoking shall be limited to dressing rooms and lounges, with doors leading to the corridor closed.

(4) Practice.

a. The use or storage of flammable anesthetic agents shall be expressly prohibited in a nonflammable anesthetizing location.

b. If cautery, electrosurgery, or a hot or arcing device is to be used during an operation, flammable germicides or flammable fat solvents shall not be applied for preoperative preparation of the skin.

c. A visual (lighted red lamp) or audible warning signal from the line isolation monitor serving an anesthetizing location indicates that the total hazard current has exceeded allowable limits. This suggests that one or more electrical devices is contributing an excessively low impedance to ground, which might constitute a fault that would expose the patient or hospital personnel to an unsafe condition should an additional fault occur. Briefly and sequentially unplugging the power cord of each electrical device in the location will usually cause the green lamp to light, showing that the system has been adequately isolated from ground, when the potentially defective device has been unplugged. The continuing use of such a device, so identified, should be questioned, but not necessarily abandoned. At the earliest opportunity the device should be inspected by the hospital engineer or other qualified personnel and, if necessary, repaired or replaced.

d. Transportation of patients while an inhalation anesthetic is being administered by means of a mobile anesthesia machine shall be prohibited, unless deemed essential for the benefit of the patient in the combined judgment of the surgeon and anesthesiologist.

e. If, in the combined judgment of the anesthesiologist responsible for the administering of the anesthetic and the surgeon performing the operation, the life of the patient would be jeopardized by not administering a flammable anesthetic agent, the following steps shall be taken:

1. Both surgeon and anesthesiologist involved in the case shall attest to the reason for administering a flammable anesthetic in a nonflammable anesthetizing location on the patient's record and in the operating room register.

2. The hazard of static sparks shall be reduced by electrically interconnecting the patient, operating room table, anesthesia gas machine, and anesthesiologist by wet sheets or other conductive materials. Conductive accessories shall be used for the electrically conductive pathways from the anesthesia gas machine to the patient.

3. If cautery, electrosurgery, or electrical equipment employing an open spark is to be used during an operation, flammable anesthetics shall not be used. Flammable germicides or flammable fat solvents shall not be applied for the preoperative preparation of the field.

(5) Enforcement.

It shall be the responsibility of

_____

(Name)

(an anesthesiologist or other qualified person appointed by the hospital authority to act in that capacity) to enforce the above regulations.

© 2005 National Fire Protection Association NFPA 99 (p. 1 of 1)

FIGURE C.13.3 Text of Suggested Signs and Posters for Inhalation Anesthetizing Locations.

Copyright National Fire Protection Association
Provided by IHS under license with NFPA
No reproduction or networking permitted without license from IHS
Not for Resale

C.13.4.2.2 The following steps are recommended in the event of an explosion involving inhalation anesthesia apparatus:

(1) Disconnect the patient from the apparatus.
(2) Procure a new gas anesthesia apparatus and make every effort to save the life of the patient and prevent injury to the patient.

C.13.4.2.3 It is essential that all equipment involved in a fire or explosion be preserved for examination by an authority attempting to determine the cause. Additionally, pertinent administrative data, including photographs, should be recorded. The report should state the following:

(1) Whether wearing apparel of all persons in the room at the time of the fire or explosion had to meet the requirements listed in Annex E
(2) Whether portable equipment, low-voltage instruments, accessories, and furniture had to meet the requirements listed in Annex E
(3) Whether the ventilating system was being operated in accordance with 6.4.2

C.13.4.2.3.1 The area involved, with all involved items in place, should be closed off and secured for later examination by a responsible authority.

C.13.4.3 Closing Off Oxygen, Nitrous Oxide, and Air Supply.

C.13.4.3.1 In the event of a fire involving equipment connected to an oxygen, nitrous oxide, and air station outlet, the zone valve supplying that station is to be closed *[see C.13.4.6.1(1)]*.

C.13.4.3.1.1 Immediately, all patients receiving oxygen through the same zone valve have to be supplied with individual oxygen cylinders.

Note that each gas line to an operating room should have an individual zone valve *(see Section 5.1)*. Thus, closing of all valves to one room would not endanger patients in other rooms.

C.13.4.3.2 If fire involves apparatus supplied by a cylinder of oxygen, it is desirable to close the cylinder valve, if this can be done without injuring personnel.

Note that metal components of regulators and valves can become excessively hot if exposed to flame. Personnel are cautioned not to use their bare hands to effect closure.

C.13.4.4 Extinguishment or Containment of Fire.

C.13.4.4.1 Fire originating in or involving inhalation anesthesia apparatus generally involves combustibles such as rubber. Water or water-based extinguishing agents are most effective in such fires.

Precautions should be taken if line-powered electrical equipment is adjacent to or involved in fire, because of the danger of electrocution of personnel if streams of water contact live circuits.

Before attempting to fight fire with water or a water-based extinguishing agent, electrical apparatus should be disconnected from the supply outlet, or the supply circuit deenergized at the circuit panel.

If such deenergization cannot be accomplished, water should not be employed *(see C.13.4.4.3)*.

C.13.4.4.2 Fires involving, or adjacent to, electrical equipment with live circuits have to be fought with extinguishers suitable for Class C fires in accordance with NFPA 10, *Standard for Portable Fire Extinguishers*.

C.13.4.4.3 Fire extinguishers are classified according to the type of fire for which each is suited.

C.13.4.4.3.1 Fires involving ordinary combustibles such as rubber, plastic, linen, wool, paper, and the like are called Class A fires. These can be fought with water or water-based extinguishing agents. Hose lines are suitable for this purpose. Portable extinguishers suitable for Class A fires are identified with the letter A contained in a (if colored) green triangle.

C.13.4.4.3.2 Class B fires involve flammable liquids and should be fought only with an extinguisher identified by the letter B contained in a (if colored) red square.

C.13.4.4.3.3 Class C fires involve electrical equipment and should be fought only with an extinguisher identified by the letter C contained in a (if colored) blue circle.

C.13.4.4.3.4 Carbon dioxide and some dry chemical extinguishers are labeled for Class B and Class C fires. Some dry chemical units can be used for all three types *(see NFPA 10, Standard for Portable Fire Extinguishers, Annex F)*.

C.13.4.5 Protection of Patients and Personnel.

C.13.4.5.1 Serious and even fatal burns of the skin or lungs, from inhaling heated gases, are possible. Thus, it is essential that patients be removed from the scene of the fire whenever practical. Where an anesthetized patient is connected to a burning piece of equipment, it might be more practical as the initial step to remove the equipment and/or extinguish the fire than to remove the patient.

C.13.4.5.2 Noxious gases produced by fire constitute a threat to life from asphyxia, beyond the thermal burn problem.

Personnel are cautioned not to remain in the fire area after patients are evacuated, unless they are wearing proper emergency apparatus.

C.13.4.6 Indoctrination of Personnel.

C.13.4.6.1 It is highly desirable that personnel involved in the care of patients, including nurses, aides, ward secretaries, and physicians, irrespective of whether they are involved in anesthesia practices, be thoroughly indoctrinated in all aspects of fire safety, including the following:

(1) Location of zone valves of nonflammable medical gas systems and the station outlets controlled by each valve
(2) Location of electrical service boxes and the areas served thereby
(3) Location and proper use of fire extinguishers *(see C.13.4.4)*
(4) Recommended methods and routes for evacuating patients *(see Chapter 12)*
(5) Steps involved in carrying out the fire plan of the hospital
(6) Location of fire alarm boxes, or knowledge of other methods for summoning the fire department

C.13.4.6.2 To ensure that personnel are familiar with the procedures outlined above, regular instructive sessions and fire drills should be held.

C.13.5 Cylinder Table. See Table C.13.5.

C.14 Additional Information on Chapter 14.

C.14.1 Typical Gas Cylinder Table, Anesthetizing Locations. *(See Table C.13.5.)*

Copyright National Fire Protection Association
Provided by IHS under license with NFPA
No reproduction or networking permitted without license from IHS
Not for Resale

Table C.13.5 Typical Medical Gas Cylinders' Volume and Weight of Available Contents. [All Volumes at 70°F (21.1°C)].

Cylinder Style and Dimensions	Nominal Volume ($in.^3$/L)	Contents	Name of Gas								
										Mixtures of Oxygen	
			Air	Carbon Dioxide	Cyclo-propane	Helium	Nitrogen	Nitrous Oxide	Oxygen	Helium	CO_2
B	87/1.43	psig		838	75				1900		
3½ in. O.D. × 13 in.		L		370	375				200		
8.89 × 33 cm		lb-oz		1–8	1–7¼				—		
		kg		0.68	0.66				—		
D	176/2.88	psig	1900	838	75	1600	1900	745	1900	*	*
4½ in. O.D. × 17 in.		L	375	940	870	300	370	940	400	300	400
10.8 × 43 cm		lb-oz	—	3–13	3–5½	—	—	3–13	—	*	*
		kg	—	1.73	1.51	—	—	1.73	—	*	*
E	293/4.80	psig	1900	838		1600	1900	745	1900	*	*
4¼ in. O.D. × 26 in.		L	625	1590		500	610	1590	660	500	660
10.8 × 66 cm		lb-oz	—	6–7		—	—	6–7	—	*	*
		kg	—	2.92		—	—	2.92	—	*	*
M	1337/21.9	psig	1900	838		1600	2200	7.45	2200	*	*
7 in. O.D. × 43 in.		L	2850	7570		2260	3200	7570	3450	2260	3000
17.8 × 109 cm		lb-oz	—	30–10		—	—	30–10	122 ft^3	*	*
		kg	—	13.9		—	—	13.9	—	*	*
G	2370/38.8	psig	1900	838		1600		745		*	*
8½ in. O.D. × 51 in.		L	5050	12,300		4000		13,800		4000	5330
21.6 × 130 cm		lb-oz	—	50–0		—		56–0		*	*
		kg	—	22.7		—		25.4		*	*
H or K	2660/43.6	psig	2200			2200	2200	745	2200†		
9¼ in. O.D. × 51 in.		L	6550			6000	6400	15,800	6900		
23.5 × 130 cm		lb-oz	—			—	—	64	244 ft^3		
		kg	—			—	—	29.1			

Notes: These are computed contents based on nominal cylinder volumes and rounded to no greater variance than ±1%.
* The pressure and weight of mixed gases will vary according to the composition of the mixture.
†275 ft^3/7800 L cylinders at 2490 psig are available upon request.
Source: *With permission from the Compressed Gas Association, Inc.*

Copyright National Fire Protection Association
Provided by IHS under license with NFPA
No reproduction or networking permitted without license from IHS
Not for Resale

C.14.2 Text of Suggested Regulations for Nonflammable Inhalation Anesthetizing Locations and Gas Storage Areas in Nonhospital-Based Ambulatory Care Facilities. The following rules and regulations have been adopted. The requirements of 13.4.1 of NFPA 99-2005 shall apply to all anesthetizing locations and gas storage areas in this facility.

The use of any of the following flammable agents shall be prohibited from the premises. By reason of their chemical composition, these agents present a hazard of fire or explosion.

(1) Cyclopropane
(2) Divinyl ether
(3) Ethyl ether
(4) Fluroxene
(5) Ethyl chloride
(6) Ethylene

Smoking shall be limited to those areas of the premises not directly connected with the anesthetizing location or the location for storage of compressed gas cylinders.

Compressed gas cylinders shall be connected to the manifold, and otherwise handled and stored, as provided in Chapter 14 of NFPA 99-2002.

Defective electrical equipment shall not be used on the premises.

Gas pipeline alarm systems shall be monitored, and responsible personnel notified of any fall in pressure or alarm condition.

C.15 Reserved.

C.16 Reserved.

C.17 Reserved.

C.18 Reserved.

C.19 Reserved.

C.20 Additional Information on Chapter 20.

C.20.1 Nature of Hazards.

C.20.1.1 Fire and Explosion.

C.20.1.1.1 The occurrence of a fire requires the presence of combustible or flammable materials, an atmosphere containing oxygen or other oxidizing agent(s), and heat or energy source of ignition.

Note that certain substances such as acetylenic hydrocarbons can propagate flame in the absence of oxygen.

C.20.1.1.2 Under hyperbaric conditions utilizing compressed air, the partial pressure of oxygen is increased. Leakage of oxygen into the atmosphere of the chamber (for example, from improper application of respiratory therapy apparatus) can further increase markedly the oxygen partial pressure.

C.20.1.1.2.1 The flammability or combustibility of materials generally increases as the partial pressure of oxygen increases, even when the percentage of oxygen in the gas mixture remains constant. Materials that are nonflammable or noncombustible under normal atmospheric conditions can become flammable or combustible under such circumstances.

C.20.1.1.3 Sources of Fuel.

C.20.1.1.3.1 Materials that might not ignite in air at atmospheric pressure or require relatively high temperatures for their ignition but that burn vigorously in 100 percent oxygen include, but are not necessarily limited to, the following: tricresyl phosphate (lubricant); certain types of flame-resistant fabrics; silicone rubber; polyvinyl chloride; asbestos-containing paint; glass fiber-sheathed silicone rubber-insulated wire; polyvinyl chloride-insulated asbestos-covered wire and sheet; polyamides; epoxy compounds; and certain asbestos blankets.

Note that flammable lubricants are used widely in equipment designed for conventional use, including shafts, gear boxes, pulleys and casters, and threaded joints, which are coupled and uncoupled.

C.20.1.1.3.2 The flammability of certain volatile liquids and gases containing carbon and hydrogen is well known. Hazards and safeguards for their use in oxygen-enriched atmospheres at ambient pressure are well-documented in 13.4.1 of NFPA 99. See also NFPA 325, *Guide to Fire Hazard Properties of Flammable Liquids, Gases, and Volatile Solids*, now part of the NFPA *Fire Protection Guide to Hazardous Materials*.

Note that repeated reference to subsection 13.4.1 is made throughout Chapter 20. These references do not imply, and should not be construed to mean, that flammable anesthetics can or should be employed in or around hyperbaric facilities.

C.20.1.1.3.3 Human tissues will burn in an atmosphere of 100 percent oxygen. Body oils and fats, as well as hair, will burn readily under such circumstances.

C.20.1.1.3.4 When a conventional loose cotton outergarment, such as scrub suits, dresses, and gowns employed in hospital operating suites, is ignited in an atmosphere of pure oxygen, the garment will become engulfed in flame rapidly and will be totally destroyed within 20 seconds or less.

If such a garment is ignited in a compressed air atmosphere, the flame spread is increased. When oxygen concentration exceeds 23.5 percent at elevated total pressure, flame spread is much more rapid, and at 6 ATA, is comparable to 95 ± 5 percent at 1 ATA. Flame spread in air (21 percent oxygen) is somewhat increased at 6 ATA, but not to the level of 95 ± 5 percent at 1 ATA.

Combustible fabrics have tiny air spaces that become filled with oxygen when exposed to oxygen-enriched environments. Once removed to atmospheric air (e.g., room air outside the chamber), the fabric will burn, if ignited, almost as rapidly as if it were still in the oxygen environment. This hazard will remain until the oxygen trapped in the air spaces in the fabric has had time to diffuse out and be replaced by air.

C.20.1.1.3.5 Oil-based or volatile cosmetics (facial creams, body oils, hair sprays, and the like) constitute a source of fuel that is highly flammable in an oxygen-enriched atmosphere.

C.20.1.1.4 Sources of Ignition.

C.20.1.1.4.1 Sources of ignition that might be encountered in a hyperbaric chamber include, but are not necessarily limited to, the following: defective electrical equipment, including failure of high-voltage components of radiological or monitoring equipment; heated surfaces in broken vacuum tubes or broken lamps used for general illumination, spot illumination, or illumination of diagnostic instruments; the hot-wire cautery or high-frequency electrocautery; open or arcing switches, including motor switches; bare defibrillator paddles; overheated motors; and electrical thermostats.

C.20.1.1.4.2 Sources of ignition that should not be encountered in a hyperbaric facility, but that might be introduced by inept practice, include the following: lighted matches or to-

Copyright National Fire Protection Association
Provided by IHS under license with NFPA
No reproduction or networking permitted without license from IHS
Not for Resale

bacco, static sparks from improper use of personal attire, electrical wiring not complying with 20.2.7, cigarette lighters, and any oil-contaminated materials that present a spontaneous heating hazard.

C.20.1.1.4.3 In oxygen-enriched atmospheres, the minimum energy necessary to ignite flammable or combustible materials is reduced in most instances below the energy required in atmospheres of ambient air.

C.20.1.2 Mechanical Hazards.

C.20.1.2.1 General.

C.20.1.2.1.1 A large amount of potential energy is stored in even a small volume of compressed gas. In hyperbaric chambers of moderate or large size, the potential energy of the chamber's compressed atmosphere, if released suddenly, can produce devastating destruction to adjacent structures and personnel, as well as to structures and personnel remote from the site of the chamber. Such sudden release could result from failure of the vessel structure, its parts, or its piping.

C.20.1.2.1.2 A particular hazard can be created if individuals attempt to drill, cut, or weld the vessel in a manner contrary to ASME *Boiler and Pressure Vessel Code*.

C.20.1.2.2 The restriction on escape and the impedance to rescue and fire-fighting efforts posed by the chamber create a significant hazard to life in case of fire or other emergency.

C.20.1.2.2.1 A particular hazard exists to chamber personnel in the event of a fire within the structure housing the chamber. Inability to escape from the chamber and loss of services of the chamber operator would pose serious threats to the lives of all occupants of the chamber.

C.20.1.2.2.2 All personnel involved in hyperbaric chamber operation and therapy, including patients and family, have to be made aware of the risks and hazards involved. Fire prevention is essential. Extinguishment of a fire within a Class B chamber is impossible. Extinguishment of a fire within a Class A chamber is only possible utilizing equipment already installed in such a chamber, and then often only by the efforts of the occupants of such a chamber or the chamber operator.

C.20.1.2.3 The necessity for restricting viewing ports to small size limits the vision of chamber operators and other observers, reducing their effectiveness as safety monitors.

C.20.1.2.4 Containers and enclosures can be subjected to collapse or rupture as a consequence of the changing pressures of the hyperbaric chamber. Items containing entrained gas include, but are not necessarily limited to, the following: ampuls, partially filled syringes, stoppered or capped bottles, cuffed endotracheal tubes, and pneumatic cushions employed for breathing masks or aids in positioning patients. The rupture of such containers having combustible or flammable liquids would also constitute a severe fire or explosion hazard.

C.20.1.2.4.1 The sudden collapse of containers from high external pressures will result in adiabatic heating of the contents. Therefore the collapse of a container of flammable liquid would constitute a severe fire or explosion hazard both from heating and from a spill of the liquid. *(See 20.3.1.5.2 and C.20.1.1.3.2.)*

C.20.1.2.5 Other mechanical hazards relate to the malfunction, disruption, or inoperativeness of many standard items when placed in service under pressurized atmospheres. Hazards that might be encountered in this regard are implosion of illuminating lamps and vacuum tubes; overloading of fans driving gas at higher density; and inaccurate operation of standard flowmeters, pressure gauges, and pressure-reducing regulators.

Note that illuminating lamps or vacuum tubes, which implode, or overloaded fans, are sources of ignition.

C.20.1.3 Pathophysiological, Medical, and Other Related Hazards.

C.20.1.3.1 Exposure of pregnant chamber occupants to hyperbaric atmospheres might result in fetal risk.

C.20.1.3.2 Medical hazards that can be encountered routinely include compression problems, nitrogen narcosis, oxygen toxicity, and the direct effects of sudden pressure changes.

C.20.1.3.2.1 Inability to equalize pressure differentials between nasopharynx (nose) and nasal sinuses or the middle ear can result in excruciating pain and might cause rupture of the eardrum or hemorrhage into the ear cavity or nasal sinus.

C.20.1.3.2.2 The breathing of air (78 percent nitrogen) under significant pressures (as by chamber personnel breathing chamber atmosphere) can result in nitrogen narcosis, which resembles alcoholic inebriation. The degree of narcosis is directly related to the amount of pressurization. Nitrogen narcosis results in impairment of mental functions, loss of manual dexterity, and interference with alertness and ability to think clearly and act quickly and intelligently in an emergency.

C.20.1.3.2.3 Oxygen toxicity can develop from breathing oxygen at partial pressures above 0.50 atmospheres absolute for a significant length of time. Oxygen toxicity can affect the lungs (pain in the chest, rapid shallow breathing, coughing), nervous system (impaired consciousness and convulsions), or other tissues and organs, or combinations thereof.

C.20.1.3.2.4 Direct effects of reduction in pressure can include inability to equalize pressures between the nasopharynx and sinuses or middle ear, expansion of gas pockets in the gastrointestinal tract, and expansion of trapped gas in the lungs.

C.20.1.3.2.5 The presence of personnel within the cramped confines of the hyperbaric chamber in close proximity to grounded metallic structures on all sides creates a definite shock hazard if accidental contact is made with a live electrical conductor or a defective piece of electrical equipment. Such accidental contact also could be a source of ignition of flammable or combustible materials. *(See C.20.1.1.4.)*

C.20.1.3.3 Medical hazards that are not ordinarily encountered during hyperbaric oxygen therapy, but that might arise during malfunction, fire, or other emergency conditions, include electric shock and fouling of the atmosphere of the chamber with oxygen, nitrous oxide, carbon dioxide, carbon monoxide, pyrolysis products from overheated materials, or the toxic products of combustion from any fire.

C.20.1.3.3.1 Increased concentrations of carbon dioxide within the chamber, as might result from malfunction of the systems responsible for monitoring or removal thereof, can be toxic under increased pressures.

C.20.1.3.3.2 The development of combustion products or gases evolved from heated nonmetallics within the closed space of the hyperbaric chamber can be extremely toxic to life because of the confining nature of the chamber and the increased hazards of breathing such products under elevated pressure.

Copyright National Fire Protection Association
Provided by IHS under license with NFPA
No reproduction or networking permitted without license from IHS
Not for Resale

Note that extreme pressure rises have accompanied catastrophic fires in confined atmospheres. These pressures have driven hot, toxic gases into the lungs of victims as well as exceeding the structural limits of the vessel in at least one case.

C.20.1.3.4 Physiological hazards include exposure to high noise levels and decompression sickness. Rapid release of pressurized gases can produce shock waves and loss of visibility.

C.20.1.3.4.1 During hyperbaric therapy, and especially during compression, the noise level within the chamber becomes quite high. Such a level can be hazardous because it is distractive, interferes with communication, and can produce permanent sensory-neural deafness.

C.20.1.3.4.2 Decompression sickness (bends, caisson worker's disease) results from the elution into the bloodstream or extravascular tissues of bubbles of inert gas (mainly nitrogen) that becomes dissolved in the blood and tissue fluids while breathing air at elevated pressures for a significant period of time.

Note that rapid decompression of the chamber can occur if the pressure relief valve is damaged from exposure to a fire external to the chamber or from the venting of hot products of combustion from within the chamber.

C.20.1.3.4.3 The use of decompression procedures will prevent immediate escape from the Class A chamber by occupants during emergency situations.

Note that these procedures are not followed if chamber occupants are exposed to a "no-decompression exposure" [compression to less than 2 atmospheres absolute (ATA) air], or when compressed to 2 ATA or higher pressures and breathing 100 percent oxygen.

C.20.1.3.4.4 The sudden release of gas, whether by rupture of a container or operation of a device such as used in fire fighting, will produce noise, possible shock waves, reduced or obscured visibility, and temperature changes. The initial effect might be to cool the air, but resulting pressure rises will cause adiabatic heating.

C.20.1.3.5 In summary, the hazards of fire and related problems in hyperbaric systems are real. By the very nature of the hyperbaric atmosphere, increased partial pressures of oxygen are present routinely. Flammability and combustibility of materials are increased. Ignition energy is lowered. Both immediate escape and ready entry for rescue are impeded. Finally, attendants within the chamber, through effects of the elevated noise level and nitrogen pressure, might be unable to respond to emergencies quickly and accurately.

C.20.2 Suggested Procedures to Follow in Event of Fire in Class A Chambers. The procedures contained in C.20.2 are adopted from those employed by the U.S. Air Force. These procedures are published herein only as a guide for those who are preparing procedures for their own hyperbaric facilities. Their publication herein is not to be construed as implying that they become a literal part of the standard procedure in any hyperbaric facility.

C.20.2.1 Fire Inside Chamber. For fire inside the chamber the following procedures should be performed:

(1) *Inside Observer:*
   (a) Advise outside.
   (b) Don breathing air mask.
   (c) Activate fire suppression system and/or hand-held hoses.

(2) *Console Operator:*
   (a) Maintain chamber depth.
   (b) Activate the fire suppression system, if needed.
   (c) Ensure breathing gas is compressed air.
   (d) Notify the fire department by activating fire alarm station or telephone.
   (e) Note time of fire and record progress of events.

(3) *Hyperbaric Chamber (System) Technician (Outside):*
   (a) Stand by with a fire extinguisher.
   (b) Assist in unloading chamber occupants.

(4) *Physician/Safety Monitor (Outside):*
   (a) Direct operations and assist crew members wherever necessary.
   (b) Terminate procedure as soon as possible.

(5) *Other Personnel:* Stand by to evacuate chamber personnel.

C.20.2.2 Fire Outside Chamber. For fire outside the chamber the following procedures should be performed:

(1) *Console Operator:*
   (a) Notify the inside observer to stand by for emergency return to normal atmospheric pressure.
   (b) Notify fire department by activating fire alarm station or telephone.
   (c) Change chamber breathing gas to compressed air.
   (d) Don fire mask.
   (e) Note time of fire and record progress of events.

(2) *Hyperbaric Chamber (System) Technician (Outside):*
   (a) Ensure that compressor intake is drawing outside air.
   (b) Man fire extinguisher.
   (c) Help chamber operator to don fire mask.

(3) *Physician/Safety Monitor (Outside):*
   (a) Direct operations.
   (b) Determine whether procedure should be terminated.

(4) *Other Personnel:* Stand by to evacuate chamber personnel.

C.20.3 Suggested Procedures to Follow in Event of Fire in Class B Chambers.

C.20.3.1 For fires within facility not involving the chamber, the following procedure should be performed:

(1) Turn off oxygen source.
(2) Decompress chamber.
(3) Remove patient and evacuate to safe area.

C.20.3.2 For fire within chamber, the following procedure should be performed:

(1) Turn off oxygen source.
(2) Decompress chamber.
(3) Remove patient.
(4) Sound fire alarm of facility.
(5) Evacuate area.
(6) Attempt to suppress fire, or close door and await arrival of fire service personnel.

C.20.4 See Table C.20.4.

Copyright National Fire Protection Association
Provided by IHS under license with NFPA
No reproduction or networking permitted without license from IHS
Not for Resale

Table C.20.4 Pressure Table

Atmosphere Absolute (ATA)	mm Hg	psia	psig	Equivalent Depth in Seawater		mm Hg Oxygen Pressure of Compressed Air	mm Hg Oxygen Pressure of Oxygen-Enriched Air (23.5%)
				ft	m		
1	760	14.7	0	0	0	160	179
1.5	1140	22	7.35	16.5	5.07	240	268
2.0	1520	29.4	14.7	33.1	10.13	320	357
2.5	1900	36.7	22.0	49.7	15.20	400	447
3.0	2280	44.1	29.4	66.2	20.26	480	536
3.5	2660	51.4	36.7	82.7	25.33	560	625
4.0	3040	58.8	44.1	99.2	30.40	640	714
5.0	3800	73.5	58.8	132.3	40.53	800	893

Notes:
1. The oxygen percentage in the chamber environment, not the oxygen partial pressure, is of principal concern, as concentrations above 23.5 percent oxygen increase the rate of flame spread. Thirty percent oxygen in nitrogen at 1 ATA (228 mm Hg pO_2) increases burning rate. However, 6 percent oxygen in nitrogen will not support combustion, regardless of oxygen partial pressure (at 5 ATA, 6 percent oxygen gives 228 mm Hg pO_2).
2. The Subcommittee on Hyperbaric and Hypobaric Facilities recommends that one unit of pressure measurement be employed. Since a variety of different units are now in use, and since chamber operators have not settled upon one single unit, the above table includes the five units most commonly employed in chamber practice.

Annex D The Safe Use of High-Frequency Electricity in Health Care Facilities

This annex is not a part of the requirements of this NFPA document but is included for informational purposes only.

D.1 Introduction.

D.1.1 Purpose. The purpose of this annex is to provide information and recommendations for the reduction of electrical and thermal hazards associated with the use of high-frequency electricity in health care facilities.

D.1.2 Scope. This annex covers principles of design and use of electrical and electronic appliances generating high-frequency currents for medical treatment in hospitals, clinics, ambulatory care facilities, and dental offices, whether fixed or mobile.

D.1.2.1 This annex does not cover communication equipment, resuscitation equipment (e.g., defibrillators), or physiological stimulators used for anesthesia, acupuncture, and so on.

D.1.2.2 This annex does not cover experimental or research apparatus built to order, or under development, provided such apparatus is used under qualified supervision and provided the builder demonstrates to the authority having jurisdiction that the apparatus has a degree of safety equivalent to that described herein.

D.1.3 Frequency Range. For the purposes of this annex, high frequency is intended to mean any electrical energy generated in the radio-frequency range from approximately 100 kHz (100,000 cyc/sec) to microwave frequencies.

D.1.4 Intended Use. This annex is intended for use by operating personnel practicing the electrical or the medical arts, as well as apparatus designers. It thus contains material of an informative nature as well as recommendations.

D.1.5 Responsibility of the Governing Body. It is the responsibility of the governing body of the health care facility to provide its staff, patients, and visitors with an environment that is reasonably safe from the shock and burn hazards associated with the use of high-frequency electricity. In order to discharge this obligation, the governing body is permitted to delegate appropriate authority to its medical staff, consultants, architects, engineers, and others. *(See Section D.5 for further information.)*

D.1.6 Interpretations. The National Fire Protection Association does not approve, inspect, or certify any installation, procedure, equipment, or material. With respect to this annex, its role is limited solely to an advisory capacity. The acceptability of a particular piece of equipment, installation, or procedure is a matter between the health care facility and the authority having jurisdiction. However, in order to assist in the determination of such acceptability, the National Fire Protection Association has established interpretation procedures. These procedures are outlined in the NFPA *Regulations Governing Committee Projects.*

D.1.7 General Introduction. The flow of electric energy at conventional power frequencies is generally understood and predictable. As the frequency is increased to the radio-frequency range, that is, above 100 kHz (100,000 cyc/sec), the electric current might not be restricted to obvious conductive paths and consequently can have effects not generally appreciated.

High-frequency power-generating equipment can present a hazard to the patient or to the operator by the nature of its use, or by its electrical interference with other apparatus in contact with or implanted within the patient. Since the equipment usually requires direct connections to the patient, it can also present a current path through the body tissues for electrical faults occurring within it or in other equipment.

It should be kept in mind that this annex is intended for use by operating personnel practicing the electrical or the medical arts, as well as apparatus designers. Some of the comments might appear overly simple, since it was considered desirable to err on the side of clarity rather than conciseness.

Some statements in this annex concerning waveforms, frequency, and so on, refer to specific designs of apparatus that are in common use. These are cited for illustrative purposes only. Other techniques for accomplishing the same medical purposes have been developed. This annex is not intended to assess the relative merits of any of these techniques, but rather to provide guidelines for the safe use of any type of high-frequency, power-generating, medical equipment.

--`,,```,,,,````-`-`,,`,,`,`,,`---

Copyright National Fire Protection Association
Provided by IHS under license with NFPA
No reproduction or networking permitted without license from IHS
Not for Resale

This annex indicates circumstances and procedures that can produce hazards during the use of high-frequency electrosurgical or diathermy equipment, and it suggests protective measures against such hazards. This annex is concerned specifically with electrical effects and safety. The high-frequency power generated by these devices can interfere with the operation of other apparatus such as physiological monitors or pacemakers. The mechanisms of heat generation in body tissues by high-frequency energy needs to be understood and controlled to be effective therapeutically, while avoiding unwanted burning. The arc that is likely to occur when an energized high-frequency electrode contacts tissues can be an ignition source for flammable vapors and gases. Although referenced in this annex, full recommendations for safety from explosion hazards in the presence of flammable anesthetic agents are given in Annex E of this standard and should be consulted for detailed specifications. Surgical effects of electrosurgery are described in Section D.6 of this annex. A recommendation for the clinical use of electrosurgical equipment is outlined in Section D.7 of this annex. These sections are included because there is little available in the medical literature on the effective and safe use of these powerful electrical therapeutic instruments.

D.2 High-Frequency Equipment.

D.2.1 Types of Apparatus.

D.2.1.1 Electrosurgery.

D.2.1.1.1 General. Electrosurgical techniques utilize the heating effect of high-frequency current passing through tissues to desiccate, fulgurate, coagulate, or cut tissues. A very small active electrode concentrates the current with resulting rapid heating at the point of application. A larger dispersive electrode providing broad coupling with the skin is used to minimize the current density and heating at the other end of the body circuit.

D.2.1.1.2 Electrocoagulation and Fulguration. Coagulation and fulguration procedures generally employ a damped sine waveform or a train of low duty–cycle pulses. The frequency is in the 0.1- to 5-MHz (million cycles per second) region, but a wide spectrum of high frequencies also could be generated.

D.2.1.1.3 Electrocutting. High-frequency cutting of tissue is more effective with an undamped sinusoidal current or continuous pulse train. Most electrosurgical equipment provides a selection of coagulating current, cutting current, or a blended output.

D.2.1.1.4 Electrosurgical Oscillators. Electrosurgical oscillators operate in the general range of 0.5 MHz to 5.0 MHz with average output power capabilities as high as 500 watts. The actual amount of power required depends on the type of electrode used, the modality (cutting or coagulating), the operative procedure, and the conditions surrounding the operating field. In open-air cutting or coagulating, the power will generally range from 50 to 100 watts. In a transurethral resection, higher power might be required because of the bypassing effect of the irrigating fluid around the electrode. An electrosurgical unit must have a relatively low output impedance (typically 100 to 1000 ohms) in order to match the tissue electrical load and to limit open-circuit peak voltage with its attendant danger of insulation failure of electrodes, surgical handles, and so on.

Note that most older instruments used a spark gap oscillator to generate highly damped radio-frequency sine waveforms, often modulated at 120 Hz, characterized by high peak voltages and low duty cycle, for coagulating purposes. Newer instruments use solid-state circuits to generate complex pulse trains with similar characteristics. Limited studies indicate that the frequency range is not very critical, but that the low duty–cycle train is the key to the coagulating process. A continuous, unmodulated sine waveform or pulse train, delivering a high average power generated by a vacuum tube or solid state oscillator, is used for free cutting with little or no hemostasis. Higher duty–cycle, moderately damped waveforms are used when a greater degree of hemostasis is desired while cutting. *(See Section D.6 of this annex.)*

D.2.1.2 Electrocautery. Electrocautery is a surgical technique that utilizes a heated electrode or glowing wire to conduct heat to the tissue. It usually uses power frequency (60 Hz) current at low voltage to heat the electrode and hence is not a high-frequency device. It is described here because of possible confusion in terminology. In electrocautery there is no intentional passage of current through the tissues. While the voltage and frequency are low, these are patient-connected devices using electrical power, and appropriate precautions should be used. *(See Chapter 8 in the requirements portion of this document.)*

D.2.1.3 Neurosurgical Lesion Generator. Specialized instruments with lower power, 1 to 30 watts, are used in neurosurgery to make carefully delineated lesions in neural tissue. They employ continuous waveform radio-frequency power. Some designs use stereotactic instruments or neural signals for position control, and temperature measurement for size control. The temperature rise is limited to achieve tissue protein denaturation but not gross tissue destruction.

D.2.1.4 Radio-Frequency Diathermy.

D.2.1.4.1 General. Diathermy utilizes the heating effect of the passage of a high-frequency current or an electromagnetic field in body tissues. In contrast to electrosurgery, it applies a relatively even heat distribution within the tissue well below a temperature that would cause tissue destruction. Diathermy equipment operates at 27.12 MHz, with some older units at 13.56 MHz. These frequencies are assigned for this purpose by the Federal Communications Commission with rigid regulations regarding frequency control, harmonics, or spurious radiation. *(See Section D.9.)*

D.2.1.4.2 Dielectric or Spaced-Plate Diathermy. With spaced-plate applicators, heating is the result of alternating current in the tissues caused by the high potential difference between the electrodes. This alternating electric field permeates the interposed tissues, which act as lossy dielectrics between capacitor plates.

D.2.1.4.3 Inductive Diathermy. The high-frequency current of inductive diathermy is passed through a coil or coils to produce rapidly reversing magnetic fields through the tissue. Heating is caused by eddy currents set up by the alternating magnetic field.

D.2.1.5 Microwave Diathermy. Microwave energy is radiated from a reflector, usually parabolic, air-spaced from the tissue. The energy is "beamed" like light to the intended area. The depth of penetration and intensity of heating are determined by the spacing and energy output of the microwave source. The assigned medical frequency is 2450 MHz. Electromagnetic energy at this frequency has an appropriate combination of penetration and absorption in tissue.

D.2.1.6 Ultrasonic Diathermy. Ultrasonic energy in the high-frequency range (approximately 0.05 MHz to 5 MHz) is also

--`,,```,,,,````-`-`,,`,,`,`,,`---

Copyright National Fire Protection Association
Provided by IHS under license with NFPA
No reproduction or networking permitted without license from IHS
Not for Resale

used for therapeutic heating and for making lesions. It should be noted that the energy modality is mechanical (acoustic) and not electrical, and hence some of the hazards described herein do not apply. However, these are patient-connected devices employing substantial electrical power, and appropriate precautions must be used.

D.2.1.7 Hyperthermia. Heating, controlled in spatial distribution and temperature, can be applied to tumors as a therapeutic adjunct to other therapeutic techniques. Techniques similar to diathermy can be used, often with implanted antennas or coupling devices.

D.2.1.8 Medical Lasers. The spatial and frequency coherence properties of laser-generated radiation allow the localized deposition of large amounts of energy in tissue. This can be used for cutting, coagulation, or photochemoactivation. This apparatus per se is an electrical device, subject to the requirements of Chapter 8 (in the requirements portion of this document), but the peculiar hazard is the result of the unusual optical properties of this radiation.

D.2.2 Properties of High-Frequency Circuits.

D.2.2.1 General. In low-frequency apparatus, the circuit elements are usually discrete components, physically obvious, interconnected by wires or other conductors. At higher frequencies, distributive elements and less obvious forms of coupling (capacitive, inductive, and radiative) become increasingly important. Since these properties might not be fully appreciated by personnel using high-frequency medical equipment, this section reviews some aspects of them.

D.2.2.2 Nonconductive Coupling.

D.2.2.2.1 Capacitive. Any two conductors separated by a dielectric constitute a capacitor through which alternating current will pass. This capacitor has a reactance that varies inversely with frequency. Thus, when a conductive material is placed near a conductor carrying high-frequency current, some of the high-frequency energy can be transferred to this material. This coupling might exist, for example, between an electrosurgical power cable and an adjacent input lead of an electrocardiograph. Similarly, a low-impedance ground path might be presented by the capacitance between an electrode lead and its grounded metal shield. Capacitive coupling exists at all frequencies but is relatively more significant at higher frequencies.

D.2.2.2.2 Inductive. Energy might also be transferred without an obvious interconnection by the magnetic field that surrounds all current paths. This effect is used in the familiar transformer but could also produce coupling between two adventitiously placed adjacent wires. If a large conductor is placed in a magnetic field, the coupling could induce circulating current in the conductor. These "eddy currents" generate heat as would any other current in the conductor. Inductive coupling could be affected relatively little by shielding intended to inhibit capacitive coupling.

D.2.2.3 Skin Effect. Because of self-induced eddy currents, high-frequency current could be confined to the surface of metal conductors. This "skin effect" can cause a simple conductor to have a much higher effective impedance at high frequencies than it would have at low frequencies.

Skin effect should not be confused with the change of impedance of a patient's skin. Living tissue is a complex electrical system of ionic conductors and capacitors. The skin contact impedance shows a marked decrease at higher frequencies largely because of capacitive coupling through the poorly conductive outer skin layers.

D.2.2.4 Modulation and Detection. The high-frequency currents present in medical apparatus often have complex waveforms. The frequency and amplitude of the oscillations can vary. The peaks of successive oscillations form an "envelope" of the signal, or modulation. Thus a 1-MHz radio-frequency waveform might be modulated by a 120-Hz signal. When such a waveform passes through a nonlinear circuit element, other frequency waveforms are produced, including some at the modulating frequency (in this example, 120 Hz). Since the contact between an electrode and tissue, and the tissue itself, contain nonlinear elements, low-frequency currents could be present when high-frequency currents pass through the body.

D.2.2.5 Electromagnetic Radiation.

D.2.2.5.1 General. In the radio-frequency region, energy is also propagated by direct radiation through air or other media. This is the basis of radio communication and microwave diathermy and can produce undesired effects in other high-frequency apparatus.

Long Wires and Antennas. At sufficiently high frequencies, a conductor such as a simple wire can become "electrically long" and constitute a complex circuit element. In free space this length is governed by the following relation:

$$\lambda f = 300$$

where λ is the wavelength, in meters, f is the frequency, in megahertz, and 300 is the velocity of light, in meters per microsecond. The velocity is less in other media. If the conductor is an appreciable fraction of a wavelength, it is no longer a simple resistive conductor. It could have a large impedance and become an effective antenna. If the length approaches $\frac{1}{4}\lambda$ (or more), it could be part of the resonant output system of the apparatus.

D.2.2.5.2 Sources of High-Frequency Radiation.

Electrosurgical Equipment Radiation. Such radiation derives from the following:

(1) The active cable
(2) The dispersive return cable
(3) Electrical power lines (minimized by filtering)
(4) Direct radiation from components, especially the spark gap and associated wiring (minimized by proper cabinet design)
(5) Radio-frequency current paths through the patient and from the patient to ground via alternative paths, such as capacitive coupling to the table

Since the operating frequency is relatively low and the leads in the output circuit are electrically short, radiation from them is at a low level. Generally, interference with other equipment is caused by the conduction of high-frequency energy through common power lines or by capacitive and inductive coupling. Interference can be minimized by proper shielding and filtering.

Diathermy Equipment Radiation. Such radiation derives from the following:

(1) Electromagnetic radiation from the applicators and their connecting cables. The amount of radiation is dependent on the treatment level and on the orientation of the drum or spaced plates and can be influenced by the placement of the leads.

Copyright National Fire Protection Association
Provided by IHS under license with NFPA
No reproduction or networking permitted without license from IHS
Not for Resale

(2) At 27.12 MHz, a quarter wavelength (¼ λ) is 2.76 m (about 10.9 ft). The "ground" wire in the supply cable might be low impedance only at a low frequency, so that the cabinet of the diathermy acts as the "ground" plane for the unit and under unusual conditions might be at appreciable high-frequency voltage above power supply ground.
(3) A patient under treatment with spaced plates is in a strong electric field and is a conductor at some voltage above ground, as evidenced by the fact that he or she can receive a burn by touching a bare metal part of the cabinet. Since diathermy equipment is used to produce heat in tissues without direct contact with the body, the energy transferred must be by means of induction from resonant electrodes or applicators. This energy can be picked up by adjacent equipment, such as remote monitoring systems or by power lines, and can be difficult to control. Physical separation is the best solution since the signals attenuate rapidly with distance and interposed walls and building structures. The construction of shielded rooms might be necessary if the radiation problem is serious. The radiation from components and supply cable must be kept low to meet Federal Communications Commission requirements.

Microwave Therapy Radiation. Such radiation is at extremely high frequency and short wavelength. A quarter wavelength in tissue is about 3 cm (1.18 in.). The electrical properties of tissue at these high frequencies are complex and need to be investigated further.

D.3 The Hazard.

D.3.1 Hazards Covered. This annex is concerned with the hazards that can exist during the use of high-frequency power equipment in the health care facility. The danger can be to the patient, the operating personnel, or to other equipment. Some of these problems are common to all electrical apparatus and are the subject of other manuals and codes. These are appropriately referenced. The following kinds of hazards are considered:

(1) Radio-frequency interference *(see D.3.2)*
(2) High-frequency burns *(see D.3.3)*
(3) Low-frequency electrical shock *(see D.3.4)*
(4) Explosions and fire *(see D.3.5)*
(5) Complications of the use of the apparatus *(see D.3.6)*
(6) Direct current burns *(see D.3.7)*
(7) Nonionizing radiation burns and ignition *(see D.3.8)*

D.3.2 Radio-Frequency Interference.

D.3.2.1 General. The high-frequency output of therapeutic equipment can propagate by radiation or other coupling through air, tissue, or current conductors to affect the operation of other equipment, that is, by distorting or obscuring displayed data, blocking normal operation, or causing damage through thermal or electrical breakdown. The extent of the effect will depend upon operating frequency, power level, intercoupling of circuits, distance, and the sensitivity and selectivity of the affected apparatus. This could be of particular concern if the affected apparatus is computer-based since some digital circuits are very sensitive to interference.

D.3.2.2 Equipment in Contact with Patient. High-frequency currents flowing through body tissues can be conducted directly to equipment having input electrodes on or in the patient, or can be capacitively or inductively coupled to implanted sensors, to affect their operation. The performance of implanted pacemakers can be disrupted, particularly those having sensing circuits. The pacemaker manufacturer's literature should be consulted before using high-frequency equipment on a patient with a pacemaker.

D.3.2.3 Equipment in Patient Area — No Direct Contact. Telemetering and similar equipment in the immediate vicinity of the patient can be affected by energy radiated from high-frequency sources. The degree of interference depends on the strength of the interfering radiation and on the sensitivity of the affected equipment to the interfering signal. Before new configurations of equipment are utilized, they should be checked to ensure that no unacceptable interference could occur.

D.3.2.4 Equipment in Remote Areas. Equipment in remote areas can be affected by radiated energy or by energy conducted through power lines. Intensive care areas adjacent to treatment or operating areas are examples. In extreme cases shielding might be necessary, but spatial separation is usually adequate. If such interference occurs, the equipment should be modified or locations changed to reduce the interference to an acceptable level.

D.3.3 High-Frequency Burns.

D.3.3.1 Electrosurgical Equipment. When electricity flows in a conductor, heat is generated at a rate proportional to the product of the resistance and the square of the current. This thermal effect is the basis of function for electrosurgical and dielectric diathermy equipment. In the case of electrosurgical equipment, the cutting electrode is made very small to produce a high current density and consequently a very rapid temperature rise at the point of contact with tissue. The high-frequency current is intended to flow through the patient to the dispersive electrode. The dispersive electrode provides a large contact with skin to minimize the current density at that end of the patient circuit. However, when the resistance between the body and the dispersive electrode is excessive, significant current can flow via alternative paths. The relative areas are indicated in Figure D.3.3.1. If the dispersive electrode presents too small a contact area, deep tissue burns can result not only at the dispersive electrode but also at other sites. *(See also Section D.6 of this annex.)*

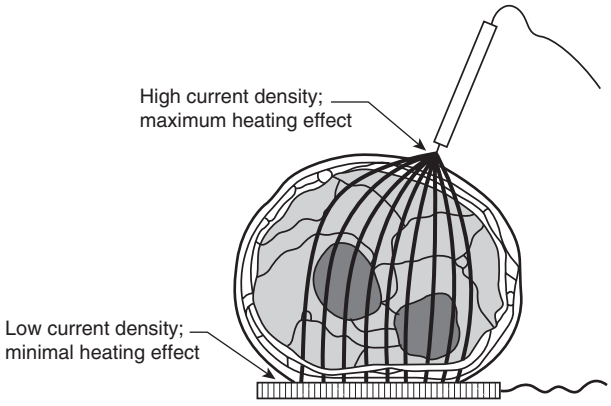

FIGURE D.3.3.1 Relative Current Densities at Contact with Patient.

Copyright National Fire Protection Association
Provided by IHS under license with NFPA
No reproduction or networking permitted without license from IHS
Not for Resale

Note that the optimum characteristics and area of tissue contact for a dispersive electrode are matters of controversy. Factors pertinent to tissue injury include adequacy of gel, anatomic placement and orientation of the electrode, edge phenomena, and principles of fabrication (such as proprietary pregelled pads as opposed to metal foil or plate). Additional considerations are the manner of use of the ESU and the adequacy of skin perfusion (related to body temperature, circulatory integrity, and pressure points).

Thermal probes, monitoring electrodes, intravascular wires, or incidental contacts with metal furniture such as operating tables, IV poles, or instrument trays could provide better opportunities for return paths for current, particularly if the preferred path is inadequate.

Historical experience suggests that 1 cm^2 for each 1.5 watts of applied power appears to offer a generous margin of safety for most applications using gelled metal plates. Continuing research might establish confidence in the utilization of less generous contact areas in view of modern practices and equipment.

D.3.3.1.1 Burns from Inadequate Dispersive Electrode Contact. Inadequate contact with a dispersive electrode can result from the following:

(1) Electrode area too small for application
(2) Electrode not in adequate contact with tissue
(3) Electrode insulated from the skin by interposition of bedding, clothing, or other unintended material

With the advent of a multitude of configurations and designs (e.g., pregelled, electrically conductive adhesive, capacitively coupled, and combinations), and since each type presents application requirements peculiar to its design, the manufacturers' instructions should be carefully read and followed.

When electrosurgical equipment is brought into use after the start of an operating procedure and after the patient has been draped, extreme care is necessary in the placement and attachment of the dispersive electrode to be sure that proper contact is made directly with the skin and that there is no intervening insulating material. Electrode paste is useful to reduce the impedance of the contact between the electrode and the patient's skin. In a prolonged procedure, this should be checked periodically to ensure that the paste has not dried up.

It should be recognized that while a dispersive electrode might be making proper and sufficient contact with a patient at the beginning of an operation, conditions requiring repositioning of the patient can arise. This repositioning might reduce or completely eliminate contact with the electrode, and burns might result. Electrode placement must be checked whenever the patient is moved.

D.3.3.1.2 Burns from Uneven Electrode Contact. Pressure points caused by bony protuberances or irregularities in electrode surface can concentrate current flow with resulting excessive temperature rise. Loose skin overhanging the edges of the electrode, or areas pinched by sliding a plate beneath the patient without lifting the patient sufficiently contribute to the burn hazard. See Figure D.3.3.1.2.

Some heat is generated at the dispersive electrode contact, but it normally is carried away by the circulation of blood under the skin, so that the temperature rise is small. However, at pressure points or after prolonged pressure, the blood flow could be impeded, so that adequate cooling is not obtained. Skin and subcutaneous tissue blood flow could be altered by body temperature, anesthetic agents, and other drugs used during surgery. The effect could vary with the patient's age and clinical condition. The significance of these factors is not always fully appreciated.

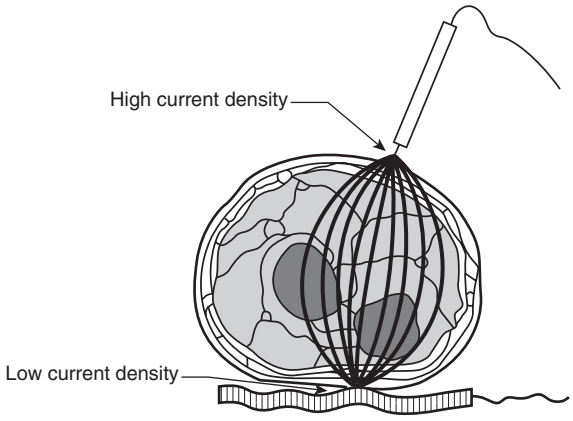

FIGURE D.3.3.1.2 High Current Density at Irregularity of Electrode.

D.3.3.1.3 Burns at Unintended Current Paths with Various Types of Electrosurgical Units. Normally, the current from the active electrode flows through the patient to the dispersive electrode and then back to the generator via the dispersive cable as shown in Figure D.3.3.1.3(a) through Figure D.3.3.1.3(c). If other paths are available, the current will divide among the several paths.

The effect of alternate paths will vary depending on the type of electrosurgical unit employed.

Electrosurgical Unit with a Grounded Dispersive Electrode and No Dispersive Cable Continuity Monitor. Normally the high-frequency current will flow as shown in Figure D.3.3.1.3(a). If the dispersive cable is broken and the unit is activated, then the current could flow through unintended ground paths as shown in Figure D.3.3.1.3(b) and Figure D.3.3.1.3(c).

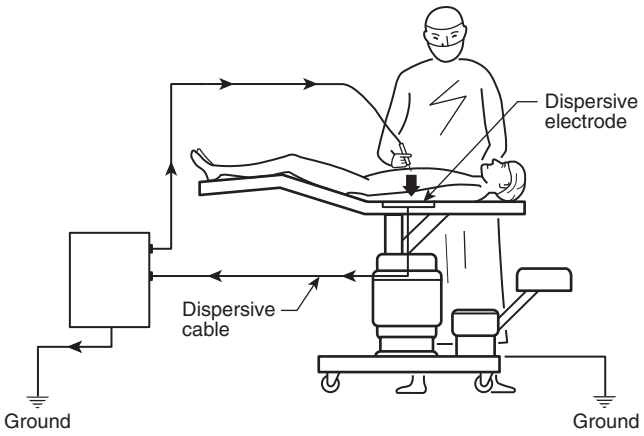

FIGURE D.3.3.1.3(a) Correct Flow of High-Frequency Current from Electrosurgery Through Tissue to Dispersive Electrode and Patient Cord Back to Generator.

Copyright National Fire Protection Association
Provided by IHS under license with NFPA
No reproduction or networking permitted without license from IHS
Not for Resale

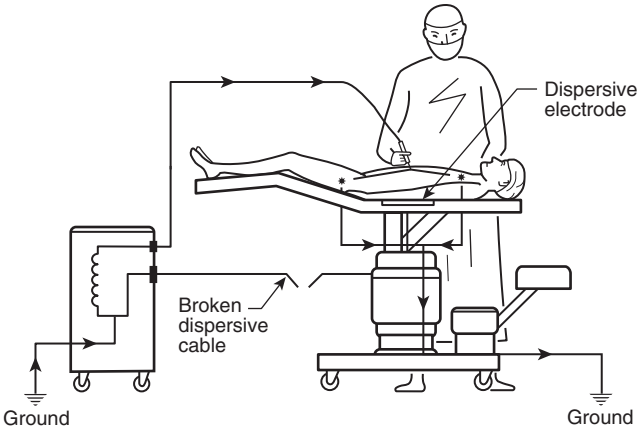

FIGURE D.3.3.1.3(b) Alternate Return Paths to Ground When Normal Return Path Through Patient Cord Is Broken.

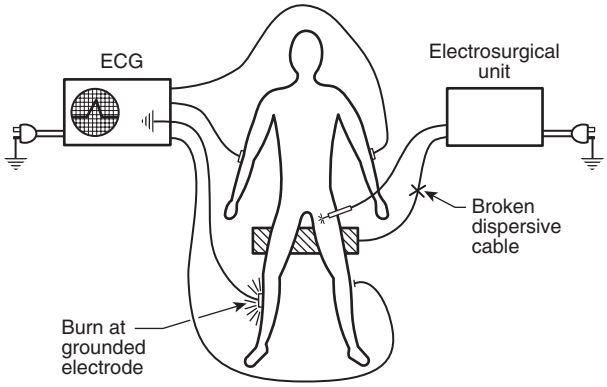

FIGURE D.3.3.1.3(c) Alternate Return Path to Ground Through Grounded Electrode of ECG.

Electrosurgical Unit with a Grounded Dispersive Electrode and a Dispersive Cable Continuity Monitor. If an electrosurgical unit has a dispersive cable monitor, the break in the dispersive cable shown in Figure D.3.3.1.3(b) can be detected, and the machine inactivated.

Electrosurgical Unit with an RF Isolated Output Circuit (Floating Output). Because RF isolation is inherently imperfect, stray RF currents (leakage currents) can flow from the electrodes to any grounded conductor contacting the patient as shown in Figure D.3.3.1.3(d). This stray RF current is greatest when the unit is activated with the active electrode not in contact with the patient.

D.3.3.1.4 Dispersive Cable Monitoring Circuits. The incorporation of a monitoring circuit will warn of a broken dispersive electrode cable. However, the monitoring circuit does not ensure that the dispersive electrode contact with the body is adequate and might lead to a false sense of security on the part of the surgeon or attendant.

To ensure alarm with broken cable but with alternate ground paths as shown in Figure D.3.3.1.3(b), the dispersive cable monitor should alarm if the series resistance [R in Figure D.3.3.1.4(a)] exceeds 150 ohms.

Note that the monitoring current might produce interference on an ECG display.

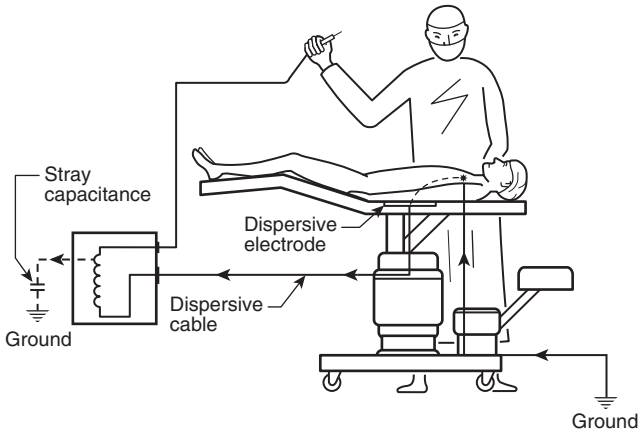

FIGURE D.3.3.1.3(d) Stray Current Flow from an RF Isolated Electrosurgical Unit.

If an electrosurgical unit has its dispersive cable connected as shown in Figure D.3.3.1.4(b), with a capacitor between it and ground, the dispersive cable monitor circuit might not respond to an alternate ground path.

Whether or not a monitoring circuit is provided, the method of attachment of the dispersive electrode should be such that the cable connector cannot be readily disconnected accidentally. A clip-on type of connection can be used only if it meets this criterion.

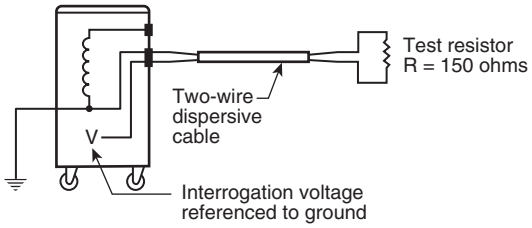

FIGURE D.3.3.1.4(a) Trip-Out Resistance R.

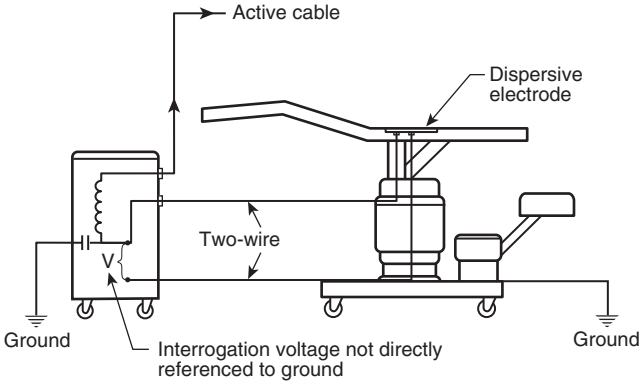

FIGURE D.3.3.1.4(b) Electrosurgical Unit with a dc Isolated Patient Plate.

--`,,```,,,,````-`-`,,`,,`,`,,`---

Copyright National Fire Protection Association
Provided by IHS under license with NFPA
No reproduction or networking permitted without license from IHS
Not for Resale

D.3.3.1.5 Other Causes of Burns at Unintended Current Paths. These can be caused by the following:

(1) Other electrodes providing direct or capacitance-coupled ground returns. Needle electrodes are often used for ECG or other physiological monitoring procedures. The subcutaneous application of these needles provides good connection to the patient, but their small surfaces could produce high-current densities, especially if they are near the operating site. They should be used with great care when electrosurgery is employed. *(See Section D.7 of this annex.)*
(2) Proximity of high-frequency leads to other wires, causing capacitive or inductive coupling, with resultant current in electrodes attached to the patient.

D.3.3.2 Diathermy. Radio-frequency diathermy can induce currents that cause excessive heating in metal devices in the dielectric field (e.g., bone pins, dental fillings, metal sutures, implanted electrodes and leads), producing burns in the adjacent tissue and jeopardizing the tolerance of the metal in the tissues. The magnetic field of inductive diathermy can cause eddy currents that produce a similar effect in implanted metals.

D.3.4 Low-Frequency Shocks (60 Hz).

D.3.4.1 General. Depending on the type of electrosurgical unit employed, the dispersive electrode can present a direct or low-impedance ground path for a fault current emanating from other equipment connected to the patient. The dispersive electrode can be connected in either of two ways:

(1) An electrosurgical unit with a grounded dispersive electrode that provides a direct path for low-frequency current. *[See Figure D.3.3.1.4(a).]*
(2) An RF grounded (low-frequency isolated) electrosurgical unit with capacitance between the electrodes and ground will provide isolation from low-frequency currents inversely proportional to the value of the capacitor (i.e., the smaller the capacitor, the better the low-frequency isolation). *[See Figure D.3.3.1.4(b).]*

D.3.4.2 Equipment Faults. Insulation failure or loose wiring in power-operated devices used for surgery, such as bone saws and dye injectors, or monitoring equipment such as an ECG, can result in high voltage being applied to the patient through contact with the device.

D.3.4.3 Equipment Not Isolated from Power Lines. Low-voltage power sources of older design, which use an autotransformer, do not provide isolation from the main power lines. Contact of the patient with the frame or other exposed conductive surfaces of the device could apply full-line voltage to a grounded patient. This is often true of power sources for resectoscope lights, electrocautery units, stimulators, and other low-voltage devices commonly used in conjunction with electrosurgery, particularly in urology. Such low-voltage equipment should not be used unless provided with an isolated power supply.

D.3.4.4 Rectified Modulation. A peculiar hazard exists in electrosurgical equipment where the high-frequency energy is modulated at low frequencies, as in the coagulating mode. The contact between the active electrode and the tissue can demodulate the high-frequency current, generating power frequency components. If a low-impedance path is present through the apparatus and ground back to the patient, hazardous current levels might be generated. Thus, the application of what is believed to be solely high-frequency current might also be the application of dangerous low-frequency currents.

D.3.5 Explosion and Fire.

D.3.5.1 General. Since electrosurgery operates on the basis of tissue destruction by high-frequency arcs, it must be used with great caution when flammable anesthetic, disinfecting, or cleaning agents are employed. If the medical procedure requires the simultaneous use of electrosurgery and flammable agents, the responsible surgeon must be fully aware of the risks he or she is taking. *(See Section E.6 in Annex E.)*

D.3.5.2 Explosions in Hollow Organs. The intestines, especially the colon, can contain flammable mixtures of hydrogen, hydrogen sulfide, methane, and oxygen. These gases are readily ignited and can burn explosively and disrupt organs. Hence, special precautions are necessary in surgery on the colon and paracolonic tissue. During laparoscopy, the abdominal cavity should be filled with a nonflammable gas, such as CO_2. When fulguration is done through a sigmoidoscope, an indwelling suction device is used to remove flammable gases. Explosive mixtures of hydrogen and oxygen form by electrolysis of electrolyte solutions used to distend the bladder during fulguration or resection. Isomolar solutions of crystalloids are used to avoid this complication.

D.3.5.3 Explosions During Operations on Head, Neck, Oropharynx, and in Body Cavities. Flammable mixtures of anesthetic agents can persist in the exhaled air of patients for long periods, and such mixtures can persist in hollow viscera and body cavities. Electrosurgical equipment should not be used for operations on the head, neck, oropharynx, or body cavities during or following the administration of a flammable anesthetizing agent.

D.3.5.4 Ignition of Combustibles in Mouth or Oropharynx during Oxygen Administration. A hot needle or blade can ignite combustibles such as dry sponges, lubricants on endotracheal tubes, or the endotracheal tube itself. In the presence of an oxygen-enriched atmosphere, a major conflagration can occur, resulting in severe burns to the mouth, oropharynx, or the respiratory tract. Wet sponges are employed when electrosurgery is contemplated in the mouth or oropharynx. It is necessary to exercise care to ensure that the blade, needle, or hot metal particles do not contact the endotracheal tube. It is not advisable to use lubricants in these circumstances. *(See NFPA 53, Recommended Practice on Materials, Equipment, and Systems Used in Oxygen-Enriched Atmospheres, for details.)*

Note that nitrous oxide will dissociate with heat to produce an oxygen-enriched atmosphere that readily supports combustion.

D.3.5.5 Fire from Flammable Germicides and Defatting Agents. The vapors from flammable solutions of disinfecting agents, or fat solvents left on the skin or saturating the drapes, can persist for long periods and be ignited by the arc that occurs when a high-frequency electrode contacts tissue. Nonflammable germicides or detergents should be used when the use of electrosurgery is contemplated.

D.3.5.6 Fires from Microwave Heating. Microwave ovens are frequently used in health care facilities to dry towels or linens, or to heat compresses or applicators. Although they are intended to heat at relatively low temperatures, they can cause fires by a kind of spontaneous combustion. A thick, tight cloth pack, particularly if there is metal or greasy material in the interior, can have a significant internal temperature rise and smolder. On opening and exposing this heated material to air, the cloth may spontaneously begin to burn.

Care should be taken to ensure that metal or other foreign materials are not left in such packs.

--`,,```,,,,````-`-`,,`,,`,`,,`---

Copyright National Fire Protection Association
Provided by IHS under license with NFPA
No reproduction or networking permitted without license from IHS
Not for Resale

D.3.6 Complications of Electrosurgery.

D.3.6.1 General. Electrosurgery provides a method of cutting and hemostasis. It is an adjunct rather than a substitute for the scalpel, scissors, and hemostatic ligature. It always results in some tissue destruction and affects cells beyond the point of contact. Unless precautions are taken, electrosurgery could be followed by the complications of impaired tissue healing, enhanced risk of infection, surface burns, and explosion. It is effective in cutting muscle and in obtaining hemostasis of small or moderately sized blood vessels. It is also effective in excising and dissecting malignant lesions when primary healing is not important.

D.3.6.2 Tissue Damage. Electrosurgery always destroys tissue. The damage extends radially from the needle or blade electrode. Too much power, especially damped sinusoidal coagulating currents, results in excessive destruction of tissue. When organs or tissues are isolated, as when on a stretched pedicle, current and heat concentrate in the pedicle and could destroy the circulation. Skin flaps and fascia could be overheated. Contact of the high-frequency electrode with instruments or retractors in the wound could result in accidental burns. Defective or extra-thin gloves can result in burns to the surgeon's fingers.

D.3.6.3 Special Electrosurgical Instruments. Some surgical techniques require special instrumentation such as a resectoscope for transurethral resections or a laparoscope for tubal ligations. Since it is desired to keep the size of these instruments to a minimum, electrical distances are also minimal. To allow minimal separation, electrical insulation is used to provide isolation between various portions of these instruments. Complications during surgery can occur for the following reasons:

(1) The instrument has an insufficient amount of insulating material.
(2) The insulation has cracks.
(3) The instrument has a poor grade of insulating material.
(4) The insulation gets wet.
(5) More than normal power settings are required of the electrosurgical unit.

With all electrosurgical instruments the manufacturer's recommendations should be followed. *(See Section D.7 in this annex.)*

D.3.6.4 Use of Surgical Instruments to Deliver Electrosurgical Current. When electrosurgical current is intentionally delivered through a surgical instrument, insulation might be needed so that only the desired portion of the instrument is exposed. This will preclude undesired contact with the patient or operator.

D.3.6.5 Use of Hand Controls. The use of pencil-type electrodes that include hand controls, particularly multiple electrodes on the same electrosurgical unit, or contact-activated electrodes presents special problems because of ease of misuse and inadvertent activation. Appropriate holsters should be provided to house electrodes in the sterile field when not in use.

D.3.7 Direct Current Burns. Some electrosurgical devices utilize low direct currents to interrogate the continuity of leads in the dispersive electrode cable. The interruption of current can then be used to inhibit the operation of the machine. An alarm system is sometimes activated as well. *(See D.3.3.1.4.)*

Where the dc voltage is referenced to ground, an inadvertent ground could provide a pathway for small direct currents to flow from the interrogation circuitry through the patient to ground.

The burns that can be produced due to the application of dc voltage are generally not thermal burns, as high-frequency ones are. Rather, they are electrochemical ones, caused by the production of caustic agents at the cathode site and chlorine gas at the anode.

The threshold level of voltage required to support electrolytic burning is close to 3 volts dc. The active electrolytic threshold depends in a complex way on many factors, some of which are electrode material, viscosity of electrolytic medium, and the chemical composition of electrolytic medium.

The amount of caustic and acidic products formed depends on the cumulative amount of current that flows through the electrolytic medium. The longer the current flows, the greater the quantity produced. Tissue fluids are converted chiefly to sodium and potassium hydroxides, and chlorine gas. Saline-soaked pads, jellies, and so on, could thus be rendered caustic.

D.3.8 Nonionizing Radiation Burns and Ignition.

D.3.8.1 Radio-Frequency Devices. In electrosurgery or diathermy it is intended to apply significant energy to the tissue of a patient for a desired therapeutic effect. However, the attendant staff are also subjected to some level of radiant energy. While this hazard is usually insignificant, peculiar circumstances might warrant closer attention. The nature of radio-frequency hazard and recommended levels are addressed in ANSI C95.1, *Safety Levels of Electromagnetic Radiation with Respect to Personnel*.

D.3.8.2 Medical Laser Devices. Laser radiation does not present the same type of hazard as lower-frequency electromagnetic energy, nor does it have the ionizing effects of X-rays and radioisotopes. However, the concentration of energy in a narrow beam is high enough to destroy tissue or to ignite combustible materials in its path. These issues are addressed in ANSI Z136.1, *Safe Use of Lasers*, and in ANSI/Z136.3, *Safe Use of Lasers in Health Care Facilities*. The former (Z136.1) addresses general safety aspects of lasers; the latter (Z136.3) provides guidance for lasers specifically for use in health care facilities.

D.4 Equipment Safety Measures.

D.4.1 General.

D.4.1.1 Equipment Requirements. Special requirements for anesthetizing locations are discussed in 13.4.1 in the requirements portion of this standard. Additional considerations outlined in this section are primarily performance recommendations, which should be implemented in the manner indicated or by other equivalent methods.

D.4.1.2 Applicability. These recommendations apply to the high-frequency equipment itself to reduce its potential as a source of radio-frequency interference, burns, shock, and explosion. Recommendations are also made relating to other associated electrical appliances to make them less susceptible to malfunction in the presence of the high-frequency apparatus.

D.4.2 High-Frequency Apparatus.

D.4.2.1 Input Power Circuits. Input power circuits should be provided with low-pass filters, electrostatically shielded isolation transformers, or other means for preventing the injection of high-frequency energy into the power lines. The use of a simple capacitive low-pass filter might introduce excessive line-to-ground leakage, which should be taken into account.

Copyright National Fire Protection Association
Provided by IHS under license with NFPA
No reproduction or networking permitted without license from IHS
Not for Resale

D.4.2.2 Output Circuits. High-frequency output circuits should be provided with isolation, high-pass filters, or other means to isolate these circuits from low-frequency voltages and rectified currents that could be produced in the patient circuit.

Specialized low-power equipment such as a neurosurgical lesion generator, where precise control is important, might have the return (dispersive) electrode directly connected to ground.

Isolated outputs are desirable practice for protection against 60-Hz electric shock. In some circumstances, however, the effective operation of devices individually or in combination might dictate connection, by the user, of a dispersive electrode to an equipment grounding conductor or to another grounding point. Such grounding will defeat any radio-frequency isolation existing in the electrosurgical unit.

Note that in electrosurgery, low-frequency or faradic currents can result from a rectification phenomenon occurring between the active electrode and body tissue during arcing. These low-frequency currents could constitute an electric shock hazard to the patient, as discussed in D.3.4.

D.4.2.3 Dispersive Cable Continuity Monitor.

D.4.2.3.1 In electrosurgical apparatus, a monitor circuit can be incorporated to indicate that the connection to the dispersive electrode is intact. This monitor should not utilize currents that could be a shock or burn hazard to the patient or that could interfere with other instruments.

D.4.2.3.2 It is preferable that the dispersive cable continuity monitor also indicate that the plate is in contact with the patient, but this should not result in increased hazard to the patient or surgeon.

D.4.2.3.3 There should be a suitable caution notice against defeat of the dispersive cable continuity-monitoring circuit. This could take the form of a label on the apparatus itself and explanatory material in the operating manual.

D.4.2.4 Foot Switches.

D.4.2.4.1 Electrically powered foot switches for use in flammable anesthetizing locations are to be explosionproof or approved as intrinsically safe, as described by Section E.6 in Annex E.

D.4.2.4.2 All foot switches should be provided with features to prevent accidental operation to a degree consistent with the need for facility of operation.

D.4.2.5 Power-Supply Cord.

D.4.2.5.1 The power-supply cord for high-frequency equipment should incorporate a separate grounding conductor connected to the grounding contact in the attachment cap (plug).

D.4.2.5.2 Where a detachable power supply cord set is used, the design of the connectors at the instrument end should prevent accidental disconnection.

D.4.2.6 FCC Regulations.

D.4.2.6.1 Shortwave diathermy should meet all requirements of Part 18, *Industrial, Scientific and Medical Service*, of the Rules and Regulations of the Federal Communications Commission. *(See Section D.9, Informational and Referenced Publications and Articles, in this annex.)*

D.4.2.6.2 The power line filter must prevent the 13.56-MHz or 27.12-MHz energy from feeding back into the power line.

D.4.3 Protection of Associated Apparatus.

D.4.3.1 Input Power Circuits. The introduction of high-frequency energy into patient monitors or other apparatus by inductive coupling or radiation to the power supply cord, or by conduction on the power supply lines, should be minimized. Low-pass filters or shielding in the power input circuits of equipment could introduce excessive leakage paths from line to ground, in which case they should not be used.

D.4.3.2 Signal Input Circuits.

D.4.3.2.1 Low-pass filters can be incorporated in the signal input circuits of patient monitoring equipment to limit the flow of high-frequency currents from body electrodes to the equipment. Since the attenuation of the higher frequencies can be achieved by providing a low-impedance path to ground, such filters can increase the possibility of burns where small electrodes are used.

D.4.3.2.2 Isolation of input circuits from high-frequency signals can be accomplished by automatically disconnecting the input terminals when the high-frequency device is energized.

D.4.3.2.3 Short-circuiting of input terminals might be effective in protecting signal input circuits but care should be taken that a low-resistance path is not provided for the high-frequency currents.

D.4.3.3 Patient Monitoring Electrodes.

D.4.3.3.1 High-frequency current densities at a monitoring, electrode-to-skin interface can be reduced by the use of a large surfaced electrode. Needle electrodes normally should not be employed during an electrosurgical procedure, but if this mode of monitoring is judged necessary it should be done with extreme care.

D.4.3.3.2 In the application of inductive diathermy, remote placement of patient monitoring electrodes might eliminate high-frequency burns.

D.4.3.3.3 Where possible, all physiological monitoring circuits with conductive contacts of small surface area on or in the body should present a high impedance to the passage of high-frequency current between the contacts and ground.

D.4.3.4 Cardiac Pacemakers. Cardiac pacemakers, particularly external pacemakers of the demand type, can be susceptible to interference. Their input circuits require careful design to minimize these effects.

D.4.3.5 Low-Voltage Electrical Devices.

D.4.3.5.1 Low-voltage power sources for endoscopy illuminators and other devices should incorporate transformers with isolated secondary circuits so that there is no possibility of patient contact with the primary power source.

D.4.3.5.2 Exposed metal parts of line-operated low-voltage sources should be kept to a minimum. The chassis and exposed metal parts likely to become energized, if any, should be connected to ground through a third wire in the power supply cord or protected by double insulation when no grounding conductor is used. Low-voltage sources for devices that should have this protection include resectoscopes, stimulators, pumps, and photographic equipment. Small exposed surfaces not likely to come energized, particularly those that contact the patient, should not be grounded.

D.4.3.5.3 A particular problem exists with resectoscopes used in conjunction with electrosurgical apparatus for urological

Copyright National Fire Protection Association
Provided by IHS under license with NFPA
No reproduction or networking permitted without license from IHS
Not for Resale

procedures. These devices often have small clearances and insulation resulting in capacitively coupled RF currents. Repeated use could damage the insulation and expose the operator and patient to high-frequency burns. These devices should be designed to withstand high RF voltages in addition to low voltages used for illumination.

D.5 Administration and Maintenance.

D.5.1 Responsibility.

D.5.1.1 Administration. Responsibility for the maintenance of safe conditions surrounding the use of high-frequency equipment falls mutually upon the governing body of the health care facility, the administration, the physicians using the equipment, and all personnel concerned with the application of the equipment to the patient.

D.5.1.2 Medical Staff. It is important that the organized medical staff of the health care facility adopt regulations and practices with respect to the use of anesthetics and electrical devices in the presence of high-frequency energy, and jointly with the facility authorities set up requirements for training physicians, nurses, and other personnel who might be involved in the procurement, application, use, or maintenance of equipment used in conjunction with high-frequency equipment.

D.5.1.3 Qualifications for Use of Electrosurgery. No physician should attempt electrosurgery unless he or she is first adept with the scalpel and hemostat. Except for endoscopic surgery or when excising malignancy, sharp dissection provides safer surgery with more predictable wound healing.

The physician who chooses electrosurgery should know how to adjust the electrosurgical unit at his or her disposal. The physician is responsible for the proper placement of the dispersive electrode and the selection of the mode of attaching other electronic equipment to the patient.

D.5.2 Personnel, Training, and Clearance.

D.5.2.1 Qualifications for Use of High-Frequency Equipment. All personnel concerned with the application of high-frequency equipment, including surgeons, nurses, operating room technicians, and orderlies, should be fully cognizant of the potential hazards associated with its use, as outlined in Section D.3 of this annex.

D.5.2.2 Instruction Manuals. A complete instruction manual for each model of apparatus should be conveniently available for reference at the location of use. *(See D.5.3.2 in this annex.)*

D.5.2.3 Operating Instructions on Apparatus. Information necessary for the safe use of the apparatus, in the form of condensed operating instructions, should be visibly and permanently displayed on, or attached to, the appliance itself.

D.5.2.4 Qualifications for Use of Monitoring Equipment in Presence of High-Frequency Currents. All personnel concerned with the application of monitoring or auxiliary apparatus that might be used in the same area as the high-frequency apparatus, or that might be in contact with the patient to whom high-frequency power is applied, should be fully cognizant of the hazards presented by that equipment in the presence of high-frequency energy.

D.5.2.5 In-Service Training. The health care facility administration should institute an obligatory in-service training program for the surgical staff and others involved in the use of high-frequency energy sources. With the current rapid changes in medical device technology, many techniques that were appropriate a short time in the past are no longer so. There is a great potential for patient injury and fire ignition if these high-powered energy devices are improperly used. Education and retraining are essential to avoid these hazards.

D.5.3 Maintenance.

D.5.3.1 Periodic Maintenance. For the continued safe operation of high-frequency apparatus, a schedule of periodic preventive maintenance should be established. It is the responsibility of the health care facility to see that this program is effective. Because of the complex nature of this apparatus and associated electrical equipment, repairs should be made by qualified service personnel. Service could be provided by a competent internal engineering group, the manufacturer, or other reliable agency.

D.5.3.2 Instruction Manuals. Proper maintenance, as well as safe use, requires that the manufacturer provide operator's or user's manuals with all units. These manuals should include operating instructions, maintenance details, and calibration and testing procedures. The manuals should include the following:

(1) Illustrations showing location of controls
(2) Explanation of the function of each control
(3) Illustrations of proper connection to the patient and to other equipment
(4) Step-by-step procedures for proper use of the apparatus
(5) Safety considerations in application and in servicing
(6) Effects of probable malfunction on safety
(7) Difficulties that might be encountered, and cautions to be observed, if the apparatus is used on a patient simultaneously with other electrical appliances
(8) Principles of operation
(9) Functional description of the circuitry
(10) Schematics, wiring diagrams, mechanical layouts, and parts list for the specific unit as shipped
(11) Power requirements, heat dissipation, weight, dimensions, output current, output voltage, and other pertinent data

The instruction manual can be in two parts: one, primarily operating instructions, addressed to medical personnel; the other, detailed maintenance and repair instructions addressed to technical personnel, except that the separate maintenance manual should include essentially all the information included in the operating manual.

D.5.3.3 Physical Inspection.

D.5.3.3.1 Cables and Electrodes. Connectors, cables, and electrodes should be inspected for damage before each use of the apparatus.

D.5.3.3.2 Mechanical Damage. The apparatus should not be used if examination of the cabinet indicates that it has suffered mechanical damage. Dial markings should be clean and legible. At all times there should be evidence that the apparatus has been protected from liquid and electrolyte contamination.

D.5.3.3.3 Inspection. The governing body should provide training for user personnel and other appropriate personnel to detect externally evident damage. The apparatus should not be used if inspection of the cord, cabinet, switches, knobs, or dials discloses hazardous mechanical damage.

Specific procedures should be developed for reporting and repair of equipment found to be damaged.

Copyright National Fire Protection Association
Provided by IHS under license with NFPA
No reproduction or networking permitted without license from IHS
Not for Resale

D.5.3.3.4 Electrical Inspection.

D.5.3.3.4.1 Dispersive Cable Monitor. If the apparatus includes a continuity monitor for the dispersive cable, it should be checked for proper operation before each use of the apparatus.

D.5.3.3.4.2 Output Power. Provision for periodic measurement of the output power of the apparatus is essential. *(See Section D.8 in this annex.)*

D.6 The Effects of Electrosurgery on Tissue.

D.6.1 Waveforms. High-frequency electricity applied to tissue through a suitable electrode results in an arc that produces three different effects: dehydration, coagulation, or dissolution (cutting). Pulsed sine waveforms *[see Figure D.6.1(a) and Figure D.6.1(b)]* with a low duty cycle are commonly used for dehydration and coagulation; for cutting, continuous undamped sine waveforms *[see Figure D.6.1(c)]* are used. If additional hemostasis is required while cutting, modulated *[see Figure D.6.1(d)]* pulsed sine waveforms are used with a high duty cycle *[see Figure D.6.1(e) and Figure D.6.1(f)]*. Some instruments use other related waveforms.

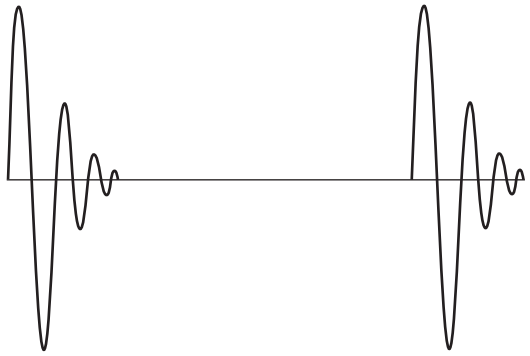

FIGURE D.6.1(a) Typical Spark-Gap Waveform with a Low Duty Cycle.

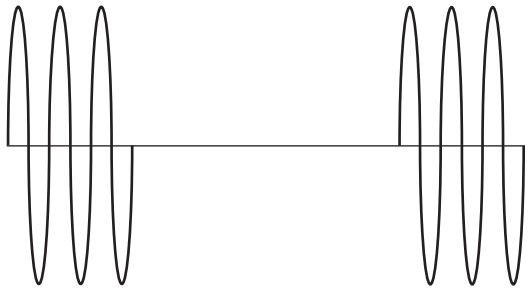

FIGURE D.6.1(b) Typical Solid-State Waveform with a Low Duty Cycle.

D.6.2 Fulguration. This is a technique used for superficial dehydration or coagulation of the tissue. The electrode is held a short distance away and sparks jump to the tissue as shown in Figure D.6.2.

D.6.3 Desiccation. This is a technique used for dehydration and deliberate destruction of tissue. The electrode is placed in contact with the tissue and left in to char the tissue as shown in Figure D.6.3.

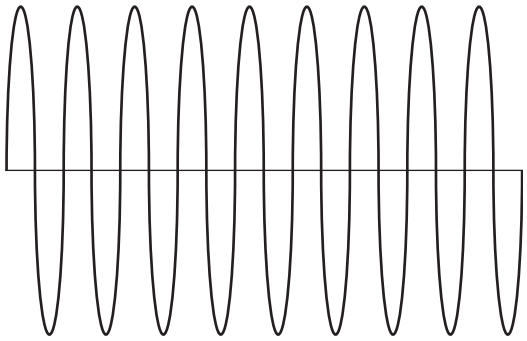

FIGURE D.6.1(c) Continuous Undamped Sine Waveform.

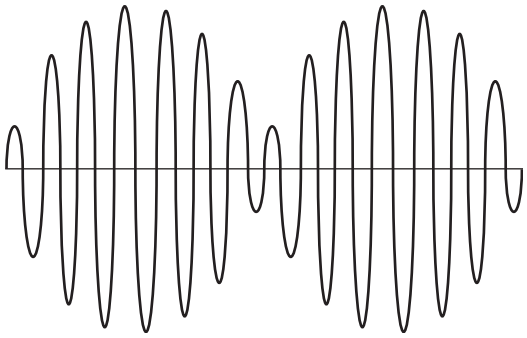

FIGURE D.6.1(d) 120-Hz Modulated Sine Waveform also Referred to as a Fully Rectified Waveform.

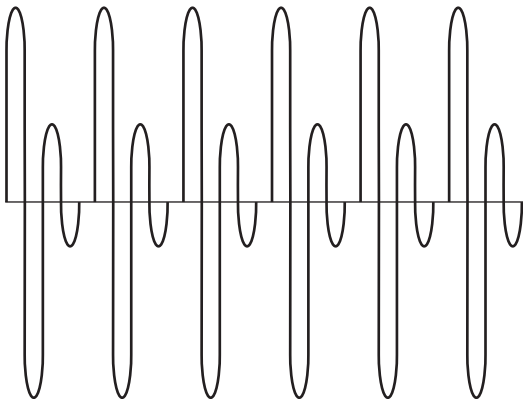

FIGURE D.6.1(e) Typical Spark-Gap Waveform with a High Duty Cycle.

D.6.4 Coagulation. This is the sealing of small blood vessels. The electrode is left in contact with the tissue for a period of time until a deep white coagulum is formed *(see Figure D.6.4)*. Time is an important parameter for proper coagulation. Excessive power is of questionable advantage, since it may actually cause the tissue to dissolve.

D.6.5 Cutting. Dissolution (cutting) occurs when power is increased until arcing persists as the electrode is moved through the tissue. Dissolution of the molecular structure of tissue cells in the path of the arc makes it appear that the tissue is falling apart.

Copyright National Fire Protection Association
Provided by IHS under license with NFPA
No reproduction or networking permitted without license from IHS
Not for Resale

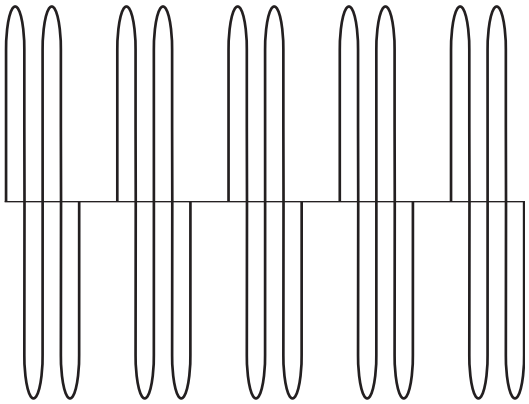

FIGURE D.6.1(f) Typical Solid-State Waveform with a High Duty Cycle.

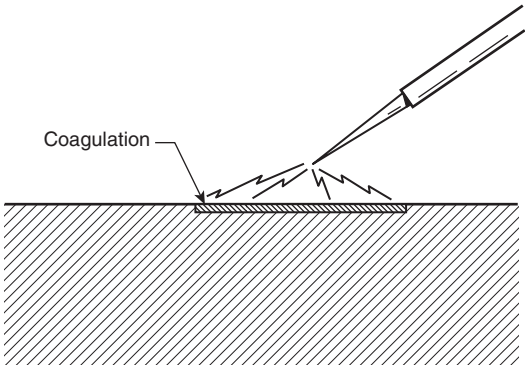

FIGURE D.6.2 Fulguration.

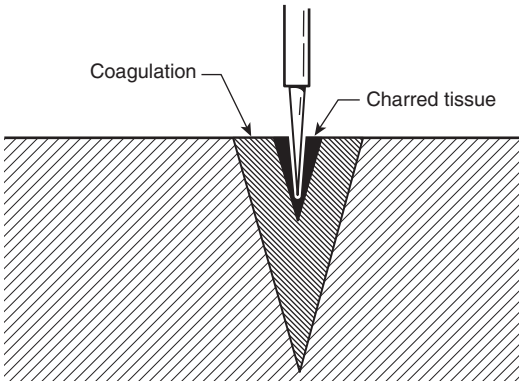

FIGURE D.6.3 Desiccation.

D.6.6 Hemostatic Cutting. Although the preceding effects of high-frequency current are quite different, they are interrelated. The success of electrosurgery results from an appropriate combination of the pulsed and continuous modes to achieve the desirable degree of cutting and hemostasis. Maximal hemostasis is generally accompanied by complete coagulation of tissue. The depth of coagulation is dependent upon the kind of tissue, the power, the waveforms, the type of electrode, and the cutting speed.

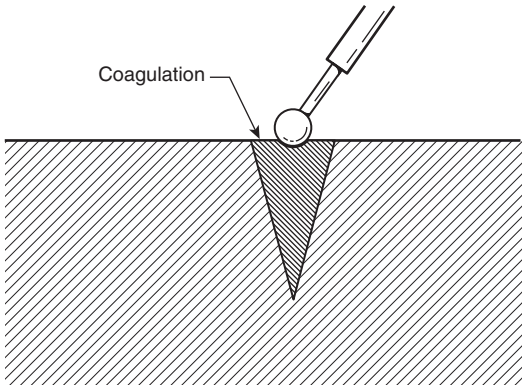

FIGURE D.6.4 Coagulation.

D.6.7 Procedures.

D.6.7.1 Cutting. When primary healing is desired, a small flat blade or needle electrode is used to cut with sufficient power to part tissues cleanly with little hemostasis of small vessels. A wire loop is also used to skive tissue; it is the electrode commonly used in the resectoscope. When cutting with the resectoscope more hemostasis is usually required, and a hemostatic cutting waveform would normally be required. The effect on tissue of electrosurgery is a function of waveform, time, and energy. Energy transfer and necrosis extend radially from the electrode. Greater power leads to greater energy release and wider areas of cell death. Hence, power should be maintained at the lowest level that achieves the desired results. A large dispersive electrode is essential.

D.6.7.2 Monoterminal Technique. Small or shallow surface growths are often desiccated with a monoterminal technique. A fine needle is inserted into the growth and current is applied for several seconds until a mild blanching of tissue occurs. When small lesions are to be destroyed the capacitance of the body suffices for coupling to ground, and the use of a dispersive electrode is unnecessary.

D.6.7.3 Bipolar Technique. Both conductors of the high-frequency electrical circuit are applied to the tissue by paired electrodes so that the energy is dissipated between and around them. Tissue destruction is restricted to a controllable volume. The depth is controlled by the distance to which the electrodes are inserted into the tissue; the breadth by the space between the two active electrodes. This modality is used for coagulation of larger lesions. Tissue destruction extends beyond the ends of the electrodes to about the same extent as is visible around the electrodes. Bipolar current is also used to coagulate blood vessels. The bleeder is grasped in the forceps and current is applied momentarily to congeal the vessel. A dispersive electrode need not be used with bipolar electrodes.

D.6.8 Spark-Gap versus Solid-State Coagulation. The principal clinical differences between spark-gap and solid-state coagulation lie in the ability of a spark-gap generator to develop higher peak powers, which results in a lower duty cycle for the same average power. This lower duty–cycle waveform results in less cutting or dissolution in the coagulation mode. In addition, spark-gap generators are able to produce higher open-circuit voltages, which results in a better ability to fulgurate.

D.6.9 Demonstration of Effect on Tissue. The effects of the various modalities can be differentiated by holding a warm,

--`,,```,,,,````-`-`,,`,,`,`,,`---

Copyright National Fire Protection Association
Provided by IHS under license with NFPA
No reproduction or networking permitted without license from IHS
Not for Resale

moist, lean piece of beef in the hand while applying high-frequency current in various ways and strengths. The tester's body provides capacitance comparable to that of the patient at low powers. The meat should be placed on the dispersive electrode for higher power. The meat can be cut to reveal the extent of blanching that results from heating by the high-frequency current. Also, the amount of cutting in the coagulation mode between various units can be checked.

D.7 The Care and Use of Electrosurgery.

D.7.1 General. This section is for the indoctrination of operating room nurses, aides, and technicians in the care and use of electrosurgical equipment.

D.7.2 Purpose and Scope. The indications for the use of high-frequency electrosurgery are described elsewhere in this annex. The purpose of this section is to promote safety for the patient and personnel and efficient operation of the unit. The steps detailed below for operating room personnel to follow for preparation, operation, and storage of the electrosurgical unit are designed to meet those ends.

D.7.3 Setting Up the Electrosurgical Unit. The following procedures should be followed:

(1) Prior to the use of the electrosurgical unit, verify with anesthesia personnel the type of anesthetic to be used. Check B.6.1, Fires and Explosions, and the operating suite fire safety regulations as necessary.
(2) Prior to sterilization, inspect patient leads and fulgurating and coagulating tips for integrity and cleanliness and bits of tissue or carbon that would interfere with proper function. Test them for electrical continuity. Similarly, check when these leads and tips are removed from the sterile package by the instrument nurse.
(3) Make certain that the electrosurgical unit, together with its dispersive electrode and cable, foot switch and cable, and line cord, is free of dust and "operating room clean."
(4) Locate the electrosurgical unit on the operator's side of the table as far as possible from the anesthesia machine and monitoring equipment. Locate where the power cables and the active electrode and dispersive electrode leads hang naturally and are not stretched across traffic lanes.
(5) Position the leads and electrodes for physiological monitoring equipment as far as possible from the active cable and active electrode when it is in use.
(6) Utilize as large a dispersive electrode as practical, commensurate with the site of the operation and position and size of the patient. Locate electrode as close as possible to the operative site. If a plate is used, exercise care so that the patient's skin is not traumatized or folded. Provide contact with as great an area of skin as is possible.
Note that if contact jelly is used on the dispersive electrode, use the correct type and spread uniformly over the electrode.
(7) Place the dispersive electrode against as large an area of soft tissue of the patient as practical. Avoid direct contact with bony prominences such as those of the scapula, sacrum, ilium, or patella. Check for continued contact during a long procedure, or when changes in patient's position are necessary.
(8) Attach the dispersive electrode securely to its cable, and check its mechanical and electrical integrity prior to preparing the operative site and draping the patient.
Note that on an electrosurgical unit with a dispersive cable continuity alarm and automatic cutoff switch, follow the manufacturer's directions for preoperative testing. Also note that on electrosurgical units without a continuity alarm, the hospital should provide an external means for periodically testing the integrity of the dispersive cable.
(9) Do not employ electrosurgery without use of the dispersive electrode, unless the operator specifically orders monoterminal or bipolar techniques and directs the omission of the dispersive electrode.

D.7.4 Operation of the Electrosurgical Unit.

D.7.4.1 It is important that personnel adjusting the electrosurgical unit during the operative procedure be aware that if the surgeon needs currents in excess of those usually required for a comparable procedure, a fault might have developed in the active electrode or dispersive electrode cables.

D.7.4.2 If a flammable anesthetic agent has been employed for induction of inhalation anesthesia, even if followed by a nonflammable agent for maintenance, the electrosurgical unit should not be used on the neck, nasopharynx, and adjacent areas.

D.7.5 Electrosurgery with the Resectoscope. The resectoscope should be maintained in top working order by periodical inspection and factory service. Discard loop electrodes, sheaths, and cords that show breaks, holes, or other evidence of deterioration.

Safe, effective use of electrosurgery for transurethral resections requires the following:

(1) The prevention of injury to the patient
(2) The prevention of injury to the user
(3) Minimizing electrical damage to equipment

D.7.5.1 Patient Burns. To minimize burns to the patient, perform the following procedures:

(1) Make sure the conductive surface of the dispersive electrode is in good contact with the skin.
(2) Do not make a large increase in power setting for an unexpected weak surgical effect.
(3) Keep metal parts of the resectoscope from contact with the patient.

D.7.5.2 Operator Burns. To minimize burns to the operator, perform the following procedures:

(1) Check to see that the control dials are set at the operator's minimum preferred settings.
(2) If the operator's hand touches some metal part of the resectoscope, as it often does, it should be with a firm, positive contact. Pinpoint contacts lead to burns even with low currents.
(3) Use only telescopes with fully insulated, nonmetal eyepieces.
(4) Avoid the use of eyeglasses with metal frames.

D.7.5.3 Telescope Use. To minimize damage to the telescope, perform the following procedures:

(1) Check to see that the loop is not bent. Guard against it touching or coming too close to the telescope.
(2) Avoid activating the electrosurgical unit when the electrode is not touching tissue.
(3) Use the minimum required power.
(4) Start each procedure with a new loop.
(5) Retract the telescope as far as possible to the point where the sheath is just visible under water to maximize the distance between the telescope and loop.
(6) Follow manufacturer's recommendations when using attached lenses.

Copyright National Fire Protection Association
Provided by IHS under license with NFPA
No reproduction or networking permitted without license from IHS
Not for Resale

D.7.6 Putaway and Storage. After using an electrosurgical unit, do the following:

(1) Clean cutting and fulgurating tips of all blood, debris, carbon, and tissue prior to storage.
(2) Clean all electrical contacts.
(3) Coil lead cables neatly and store in appropriate locations.
(4) If the electrosurgical unit is stored other than in an operating room, select a dust-free location within the operating suite.

D.7.7 Repair of the Electrosurgical Unit.

D.7.7.1 The electrosurgical apparatus contains complex circuits that can develop malfunction after a period of operation. Prominently tag any item of electrosurgical equipment that is known or suspected to be defective and do not use again until it has been inspected and repaired by competent personnel.

D.8 Determination of Output Power.

D.8.1 Output Power. An approximate determination of output power of the electrosurgical device can be made using a radio-frequency ammeter of suitable range in series with a resistance. A simplified schema is shown in Figure D.8.1. Maintain spacing and insulation appropriate to the high frequency and high voltage involved. The power, *P*, in watts can be calculated as follows:

$$P = I^2 \times 500$$

where *I* is the rms current in amperes.

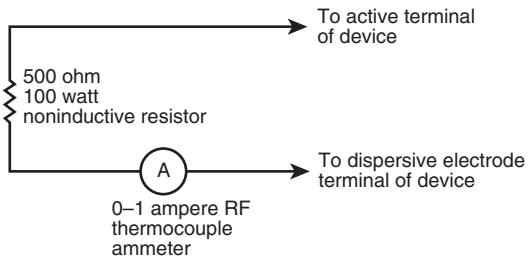

FIGURE D.8.1 Simplified Apparatus to Measure Power Output of Electrosurgical Unit.

D.9 Informational and Referenced Publications and Articles in Annex D.

D.9.1 NFPA Publication. National Fire Protection Association, 1 Batterymarch Park, Quincy, MA 02169-7471.

NFPA 53, *Recommended Practice on Materials, Equipment, and Systems Used in Oxygen-Enriched Atmospheres*, 2004 edition.

D.9.2 ANSI Publications. American National Standards Institute, 25 West 43rd Street, 4th Floor, New York, NY 10036.

ANSI C95.1, *Safety Levels of Electromagnetic Radiation with Respect to Personnel*, 1991.

ANSI Z136.1, *Safe Use of Lasers*, 1993.

ANSI/Z136.3, *Safe Use of Lasers in Health Care Facilities*, 1988.

ANSI/AAMI HF 18, *Electrosurgical Devices*, 1993.

D.9.3 IEC Publication. (Available in U.S. through American National Standards Institute, 25 West 43rd Street, 4th Floor, New York, NY 10036.)

IEC 601-2-2, *Medical Electrical Equipment, Part 2: Particular Requirements for the Safety of High Frequency Surgical Equipment.*

D.9.4 U.S. Government Publications. U.S. Government Printing Office, Washington, DC 20402.

Federal Communications Commission Rules and Regulations, Part 18, *Industrial, Scientific and Medical Service.*

Food and Drug Administration, *Regulations for the Administration and Enforcement of the Radiation Control for Health and Safety Act of 1968.*

D.9.5 Articles on the Subject of High-Frequency Electricity.

Battig, C. G., MD. Electrosurgical burn injuries and their prevention. *JAMA*, Vol. 204, No. 12, 17 June 1968.

Billin, A. G. *Electrosurgery in the Operating Room.* Ritter Company, Inc., 400 West Avenue, Rochester, NY 14611.

Bruner, J., and Leonard, P., "Electricity, Safety, and the Patient," Year Book Medical Publishers, Inc., 1989.

Conolly, W. B., Hunt, T. K., and Dunphy, J. E. The place of electrosurgery in abdominal operations. *Amer. J. Surg.*, 118:422–426 (Sept.), 1969.

Dobbie, A. K. The electrical aspects of surgical diathermy. *Biomedical Engineering*, pp. 206–216, May 1969.

Fein, R. L. Transurethral electrocautery procedures in patients with cardiac pacemakers. *JAMA*, Vol. 202, No. 2, pp. 101–103, 2 October 1967.

Hussey, J. L., and Pois, A. J. Bowel gas explosion. *Amer. J. Surg.*, 120:103, 1970.

Leeming, M. N. Low voltage direct current burns. *JAMA*, 214:1681–1684, 1970.

Mitchell, J. P., and Lomb, G. N. *A Handbook of Surgical Diathermy.* John Wright and Sons Ltd., Bristol, 1966.

Pearce, J. A., PhD, *Electrosurgery.* John Wiley & Sons, New York, 1986.

Annex E Flammable Anesthetizing Locations

NOTE: The text of this annex is a compilation of requirements included in previous editions of NFPA 99 on safety practices for facilities that used flammable inhalation anesthetics. This material is being retained in this annex by the Technical Committee on Anesthesia Services for the following reasons: (1) the Committee is aware that some countries outside the United States still use this type of anesthetics and rely on the safety measures herein; and (2) while the Committee is unaware of any medical schools in the U.S. still teaching the proper use of flammable anesthetics or any health care facilities in the U.S. using flammable anesthetics, retaining this material will serve as a reminder of the precautions that would be necessary should the use of this type of anesthetics be re-instituted.

E.1 Definitions.

E.1.1 Antistatic. That class of materials that includes conductive materials and, also, those materials that throughout their stated life meet the requirements of E.6.6.8.6.3 and E.6.6.8.6.4.

E.1.2 Conductive. Not only those materials, such as metals, that are commonly considered electrically conductive, but also that class of materials that, when tested in accordance with this document, have a resistance not exceeding 1,000,000 ohms. Such materials are required where electrostatic interconnection is necessary.

E.1.3 Flammable Anesthetizing Location. Any area of a facility that has been designated to be used for the administration of any flammable inhalation anesthetic agents in the normal course of examination or treatment.

Copyright National Fire Protection Association
Provided by IHS under license with NFPA
No reproduction or networking permitted without license from IHS
Not for Resale

E.1.4 Hazardous Area in a Flammable Anesthetizing Location. The space extending 152 cm (5 ft) above the floor in a flammable anesthetizing location. *(See E.6.6.)*

Note that this definition is based on the following considerations:

(1) Available data and recent investigations indicate that under customary operating procedures, flammable anesthetic mixtures are diluted by air in the anesthetizing area to a nonflammable range before reaching a vertical height of about 30 cm (1 ft) from any source of leakage or spillage involving quantities of anesthetics used in anesthesia procedures. These findings corroborate the premises on which safeguards required in this standard were originally based and do not negate the need for any of the protective measures required; however, they do provide a sound basis for the statement that recirculation of air in ventilating systems serving anesthetizing locations does not increase the hazards of fire and explosions from flammable anesthetic vapors.

(2) The mobile character of the operating table and portable equipment and the variety of the surgeon's techniques and surgical positions that will alter the physical relationship of the anesthesia gas machine, the surgeon, the anesthetist, and the patient's head, and all of these with respect to their relative location within the room, must be considered in the determination of the electrical safeguards to be provided.

(3) The portion of the flammable anesthetizing location extending 152 cm (5 ft) above the floor as defined in Chapter 3 constitutes a "hazardous area." Because persons entering such anesthetizing locations may have accumulated electrostatic charges, the floors of corridors and rooms contiguous to the flammable inhalation anesthetizing location must be conductive and at the same potential as the floor in the flammable anesthetizing location. Patients should not be transported while flammable anesthetics are being administered. Rooms such as sterilizing rooms directly communicating with flammable anesthetizing locations are required by E.6.6.1.3 to be provided with conductive floors to equalize static charges. Such rooms, if not used as flammable anesthetizing locations, are not required to be served by explosionproof wiring specified in E.2.1. Where flammable anesthetizing locations open directly onto a passageway not a part of an operating room or delivery room, the conductive floor should extend 3 m (9.84 ft) from either side of the door frame and out from the frame (into the passageway) for 3 m (9.84 ft). It is desirable to demarcate the hazardous location of such a corridor by a physical barrier (doors) and cautionary signs to check smoking, use of open flame, wearing of improper clothing and shoes, and the application of insulating floor wax.

(4) Designated areas in which the use and handling of flammable anesthetic agents are prohibited by hospital regulations, such as corridors in the surgical suite, rooms adjacent to flammable anesthetizing locations, and nonflammable anesthetizing locations, should be indicated by prominent signs permanently installed.

(5) Postoperative recovery units that are not immediately adjacent to flammable anesthetizing locations and in which the use of flammable anesthetic agents is prohibited are not considered to involve explosion hazards and therefore do not require the installation of static-dissipation systems nor explosionproof equipment required for explosive atmospheres. Prohibition of the use of flammable anesthetic agents by hospital regulation and the proper indication of such prohibition by prominent signs, as recommended in E.6.7.5, is recommended.

E.1.5 Hazardous Location. An anesthetizing location or any location where flammable agents are used or stored.

E.1.6 Mixed Facility. A facility wherein flammable anesthetizing locations and nonflammable anesthetizing locations coexist within the same building, allowing interchange of personnel or equipment between flammable and nonflammable anesthetizing locations.

E.1.7 Storage Location for Flammable Inhalation Anesthetics. Any room within a consuming facility used for the storage of flammable anesthetic or flammable disinfecting agents *(see* NFPA 30, *Flammable and Combustible Liquids Code)*, or inhalation anesthetic apparatus to which cylinders of flammable gases are attached.

Note that such a storage location is considered a hazardous area throughout the location.

E.2 Electrical System Criteria.

E.2.1 Electric wiring installed in the hazardous area of a flammable inhalation anesthetizing location shall comply with the requirements of Article 501, Class I, Division 1 of NFPA 70, *National Electrical Code*. Equipment installed therein shall be approved for use in Class I, Group C, Division 1 hazardous areas.

E.2.2 Wiring for low-voltage control systems and nonemergency communications and signaling systems shall be installed in metal raceways unless located outside or above the hazardous area in the flammable anesthetizing location.

E.2.3 Electric switches installed in hazardous areas of flammable anesthetizing locations shall comply with the requirements of Section 501.6(a) of NFPA 70, *National Electrical Code*.

E.2.4 Receptacles in hazardous areas shall comply with the requirements of Section 501.12 of NFPA 70, *National Electrical Code*. They shall be a part of an approved unit device with an interlocking switch arranged so that the plug cannot be withdrawn or inserted when the switch is in the "on" position.

Note that it should be recognized that any interruption of the circuit, even of circuits as low as 8 volts, either by any switch or by loose or defective connections anywhere in the circuit, might produce a spark sufficient to ignite a flammable anesthetic agent.

E.3 Ventilation — Flammable Anesthetizing Locations.

E.3.1 Relative humidity of not less than 50 percent, at a temperature range of 18°C (64.4°F) to 27°C (80.6°F), shall be maintained in flammable inhalation anesthetizing locations.

E.3.2 Requirements for ventilation and cooling set forth in 6.4.1.2 through 6.4.1.6 of NFPA 99 shall apply.

E.3.3 Ductwork for Air Handling. It is not required that ductwork be fabricated of nonsparking material.

E.3.4 If a window-type temperature regulating unit (air conditioner) is installed so that any part is less than 152 cm (5 ft) from the floor of a flammable anesthetizing location, such unit shall comply with the requirements set forth in E.3.5.

E.3.5 Such a window-type temperature regulating unit shall be provided with a vertical divider that effectively prevents airflow from the room side to the outside side, and all electric equipment on the room side of this divider shall meet the requirements of E.2.1 of this annex. The installed unit shall tightly fit the opening in the window or wall. Openings in the divider for shafts of fans, other moving parts, or wiring shall be gasketed unless the local air pressure on the room side of the opening when the unit is in operation is less than that on the

Copyright National Fire Protection Association
Provided by IHS under license with NFPA
No reproduction or networking permitted without license from IHS
Not for Resale

outdoor side. A fresh-air port is permitted in the divider if it is automatically closed when the unit is not in operation. The rotating parts of fans on the room side of the divider shall not cause percussion sparks if they accidentally contact surrounding objects.

Note that for ventilation of anesthetizing locations, mechanical ventilation is required as a means of diluting flammable gases and maintaining the proper humidity. It is also the most effective and aseptic method of maintaining a uniform humidity within the area.

E.3.5.1 General. Anesthetizing locations used solely for the induction of anesthesia need only be ventilated at a rate sufficient to maintain the proper humidity.

Anesthetizing locations in which clinical procedures are performed, such as operating rooms, delivery rooms, and certain treatment rooms, require special ventilation as described below. This special ventilation serves not only to maintain humidity but also to reduce the hazard of infection, which is accomplished by dilution and removal of airborne microbial contamination and dilution of flammable gases. It also contributes to odor control and comfort of personnel.

The Committee on Anesthesia Services recognizes that a hazard can be created by the chronic exposure of anesthesia and other operating room personnel to low concentrations of vapors or commonly employed volatile liquid inhalation anesthetic agents. For further information see the sources listed in E.3.5.1.1 through E.3.5.1.4.

E.3.5.1.1 Annex E Publications.

Cohen, E. N., et al. Anesthesia, pregnancy and miscarriage: A study of operating room nurses and anesthetists. *Anesthesiology* 35:343, 1971.

Frey, R., et al. How strong is the influence of chronic exposure to inhalation anesthetics on personnel working in operating theatres? W.F.S.A. *Newsletter* No. 10, June 1974.

Whitcher, C. E., et al. Chronic exposure to anesthetic gas in the operating room. *Anesthesiology* 35:348, 1971.

Yanagida, H., et al. Nitrous oxide content in the operating suite. *Anesth. and Analg.* 53:347, 1974.

E.3.5.1.2 The Health Hazard.

Bruce, D. L., and Bach, M. J. Psychological studies of human performance as affected by traces of enflurane and nitrous oxide. *Anesthesiology* 42:194–196, 1975.

Bruce, D. L., et al. Trace anesthetic effects on perceptual, cognitive and motor skills. *Anesthesiology* 40:453–458, 1973.

Chang, W. C., et al. Ultrastructural changes in the nervous system after chronic exposure to halothane. *Exp. Neurol.* 45:209–219, 1974.

Cohen, E. N., et al. A survey of anesthetic health hazards among dentists. *J. Am. Dent. Assoc.* 90:1291–1296, 1975.

Cohen, E. N., et al. Occupational disease among operating room personnel — a national study. *Anesthesiology* 41:321–340, 1974.

Cohen, E. W., and Brown, B. W. Comment on the critique. *Anesthesiology* 42:765–766, 1975.

Davison, L. A., et al. Psychological effects of halothane and isoflurane anesthesia. *Anesthesiology* 43:313–324, 1975.

Fink, B. R., ed. *Toxicity of Anesthetics.* Part Four, "Teratogenic Effects." Baltimore, Williams & Wilkins Co., 308–323, 1968.

Fink, B. R., and Cullen, B. F. Anesthetic pollution: What is happening to us? *Anesthesiology* 45:79–83, 1976.

Greene, N., Report on American Cancer Society study of causes of death amongst anesthetists. Annual Meeting, American Society of Anesthesiologists, New Orleans, LA, 18 October 1977.

Hazleton Laboratories America, Inc. Final Reports, CDC-99-74-46, National Institute for Occupational Safety and Health, 1014 Broadway, Cincinnati, OH. Long-term inhalation reproductive and teratogenic toxicity evaluation of nitrous oxide plus halothane. 14 November 1975. Cytogenic evaluation of spermatogonial cells in the rat following long-term inhalation exposure to nitrous oxide plus halothane. 17 November 1976.

Kripke, B. J., et al. Testicular reaction to prolonged exposure to nitrous oxide. *Anesthesiology* 44:104–113, 1976.

Lecky, J. H. Chronic exposure to anesthetic trace levels. *Complications in Anesthesia*, edited by L. H. Cooperman and F. K. Orkin. J. B. Lippincott Co., Philadelphia.

Quimby, K. L., et al. Behavioral consequences in rats from chronic exposure to 10 ppm halothane during early development. *Anesth. and Analg.* 54:628–633, 1975.

Smith, G., and Shirley, A. W. Failure to demonstrate effects of low concentrations of nitrous oxide and halothane on psychomotor performance. *Br. J. Anaesth.* 48:274, 1976.

Spence, A. A., et al. Occupational hazards for operating room-based physicians. *JAMA* 238:955–959, 1977.

Walts, L. F., et al. Critique: Occupational disease among operating room personnel. *Anesthesiology* 42:608–611, 1975.

E.3.5.1.3 Reduction and Control Methods.

Lecky, J. H., et al. In-house manual for the control of anesthetic gas contamination in the operating room. University of Pennsylvania Hospital publication.

Lecky, J. H. The mechanical aspects of anesthetic pollution control. *Anesth. and Analg.* 56:769, 1977.

Muravchick, S. Scavenging enflurance from extracorporeal pump oxygenators. *Anesthesiology* 47:468–471, 1977.

Pisiali, R. L., et al. Distribution of waste anesthetic gases in the operating room air. *Anesthesiology* 45:487–494, 1976.

Whitcher, C. E., et al. Control of occupational exposure to N_2O in the dental operatory. HEW Publication No. (NIOSH) 77-171. Cincinnati, U.S. Department of Health, Education and Welfare, Public Health Services Center for Disease Control, National Institute for Occupational Safety and Health.

Whitcher, C. E., et al. Control of occupational exposure to nitrous oxide in the dental operatory. *J. Am. Dent. Assoc.* 95:763–766, 1977.

Whitcher, C. E., et al. Development and evaluation of methods for the elimination of waste anesthetic gases and vapors in hospitals. HEW Publication No. (NIOSH) 75-137, GPO stock no. 1733-0071. Supt. of Documents, Govt. Print. Off., 1975.

E.3.5.1.4 Dealing with Personnel.

Lecky, J. H. Notice to employees on the potential health hazards associated with occupational exposure to anesthetics. University of Pennsylvania Hospital publication.

E.3.5.1.4.1 NIOSH — OSHA Publication.

Criteria for a recommended standard: Occupation exposure to waste anesthetic gases and vapors. HEW Publication No. (NIOSH) 77-140. Cincinnati, U.S. Department of Health, Education and Welfare, Public Health Service Center for Disease Control, National Institute for Occupational Safety and Health.

Copyright National Fire Protection Association
Provided by IHS under license with NFPA
No reproduction or networking permitted without license from IHS
Not for Resale

E.3.5.1.4.2 ANSI Publication.

American National Standards Institute, Committee Z79, SC-4 *Anesthesia Gas Scavenging Devices and Disposal Systems*, J. H. Lecky, M.D., Chairman, ANSI/Z79.11-1982.

A prudent course of action pending further data on this topic lies in the installation of a gas scavenging system for use when inhalation anesthetic techniques are employed with gas flows in excess of metabolic and anesthetic requirements. Care must be taken in the selection and application of any such system to a gas anesthesia apparatus or anesthesia ventilator to avoid exposing the breathing circuit to any pressure less than atmospheric, and also to avoid the dumping of any flammable vapors into a central suction system not designed for such operation.

E.3.5.2 Operating Rooms, Delivery Rooms, and Special Procedure Rooms. Ventilation air should be supplied from several outlets located on the ceiling or high on the walls of the location. Air should be exhausted by several inlets located near the floor on opposite walls. The air distribution pattern should move air down and through the location with a minimum of draft to the floor for exhaust.

Studies indicate that an air change rate equivalent to 25 room volumes of air per hour dilutes bacteria dispersed into the room by human activity. When properly filtered, 80 percent can be recirculated with no more microbial contamination than 100 percent outdoor air filtered in the same manner. *(See ASHRAE Handbook — HVAC Applications, 1982, Chapter 7, Table on Pressure Relationships and Ventilation of Certain Areas.)* A positive air pressure relative to the air pressure of adjoining areas should be maintained in the anesthetizing location. This is accomplished by supplying more air to the location than is exhausted from it. Such pressurization will eliminate the infiltration of contaminated air around perimeter openings of door closures or other wall openings during clinical procedures.

Ventilation systems should incorporate air filters with an efficiency of not less than 90 percent when tested in accordance with ASHRAE Standard 52, *Method of Testing Air Cleaning Devices Used in General Ventilation for Removing Particulate Matter.* (Summarized in ASHRAE *Handbook* — HVAC Applications, 1983, Chapter 10, Equipment.)

E.3.5.3 Humidity Control. The ventilation system must incorporate humidity equipment and controls to maintain a relative humidity of at least 50 percent. Although the high level of humidity is not sufficiently reliable for complete dissipation of electrostatic charges, this humidity does reduce the hazard of electrostatic spark discharges under many conditions. The control of airborne bacteria is facilitated in this range of humidity.

E.3.5.4 Temperature. The temperature to be maintained in operating rooms should be chosen on the basis of the well-being of patient and operating teams. It is recommended that the equipment provide for a room temperature in a range of 20°C (68°F) to 24°C (75°F) with controls for selecting any desired temperature within this range.

E.4 Electrical Equipment Criteria.

E.4.1 Wiring. Wiring for fixed equipment installed outside the hazardous area of a flammable inhalation anesthetizing location shall comply with 4.3.2.1 in NFPA 99.

E.4.2 Installation. All service equipment, switchboards, or panelboards shall be installed outside hazardous areas.

E.4.3 Control Devices. Devices or apparatus such as motor controllers, thermal cutouts, switches, relays, the switches and contactors of autotransformer starters, and resistance and impedance devices, which tend to create arcs, sparks, or high temperatures, shall not be installed in hazardous areas unless devices or apparatus are of a type approved for use in Class I, Group C atmospheres in accordance with Sections 501.6(a) and 501.7(a), or Sections 501.6(b) and 501.7(b) of NFPA 70, *National Electrical Code.*

Note that it is recommended that control devices for such purposes be installed in a nonhazardous area and actuated by some suitable mechanical, hydraulic, or other nonelectric remote-control device that can be operated from any desired location. This recommendation applies particularly to foot and other switches that must be operated from a location at or near the floor.

E.4.4 Location. Equipment in storage locations for flammable anesthetic locations shall comply with E.6.8.6.

E.4.5 Line Voltage Equipment — All Anesthetizing Locations.

E.4.5.1 Portable equipment shall be provided with a storage device for its flexible cord.

E.4.5.2 Flexible cord for portable lamps or portable electric appliances operating at more than 12 volts between conductors, intended for use in all anesthetizing locations, shall be continuous and without switches from the appliance to the attachment plug and of a type designated for extra-hard usage in accordance with Section 501.11 of NFPA 70, *National Electrical Code.* Such flexible cord shall contain one extra insulated conductor to form a grounding connection between the ground terminal of the polarized plug and metal lamp guards, motor frames, and all other exposed metal portions of portable lamps and appliances. Cords shall be protected at the entrance to equipment by a suitable insulating grommet. The flexible cord shall be of sufficient length to reach any position in which the portable device is to be used, and the attachment plug shall be inserted only in a fixed, approved receptacle. For correct use and maintenance of adapters, the provisions of 8.5.2.1.7 shall apply.

E.4.5.2.1 Foot-treadle–operated controllers are permitted in any anesthetizing location if appended to portable electric appliances in an approved manner or if integral with the supply cord and equipped with a connector containing a flammable anesthetizing location receptacle approved for use in Class I, Group C, Division 1 hazardous locations into which the equipment plug *(see E.2.4 and E.4.3)* may be inserted. Foot-treadle–operated controllers and their connector shall be splashproof.

E.4.5.2.2 Listed double-insulated appliances with two-wire cords shall be permitted.

E.4.5.2.3 Small metal parts not likely to become energized (e.g., nameplates, screws) shall not be required to be grounded.

E.4.5.2.4 Two or more power receptacles supplied by a flexible cord are permitted to be used to supply power to plug-connected components of a movable equipment assembly that is rack-, table-, or pedestal-mounted in a nonflammable anesthetizing location provided all of the following:

(1) The receptacles are an integral part of the equipment assembly, permanently attached.
(2) The sum of the ampacity of all appliances connected to the receptacles shall not exceed 75 percent of the ampacity of the flexible cord supplying the receptacles. Note that whole-body hyperthermia/hypothermia units should be powered from a separate branch circuit.

Copyright National Fire Protection Association
Provided by IHS under license with NFPA
No reproduction or networking permitted without license from IHS
Not for Resale

(3) The ampacity of the flexible cord is suitable and in accordance with the current edition of NFPA 70.
(4) The electrical and mechanical integrity of the assembly is regularly verified and documented through an ongoing maintenance program. *(See 13.4.1.2.6.3 for criteria of receptacles.)*

E.4.5.2.5 Overhead power receptacles, not in a hazardous location, are permitted to be supplied by a flexible cord (ceiling drop) that is connected at a ceiling-mounted junction box under either of the following conditions:

(1) Permanently
(2) Utilizing a locking-type plug cap and receptacle combination, or other method of retention. In either connection mode, suitable strain relief shall be provided. Note that the disconnection means is permitted only to facilitate replacement; as such, ceiling drop cords may not be disconnected for alternative usage. *(See 13.4.1.2.6.3 for criteria of receptacles.)*

E.4.6 Line Voltage Equipment — Flammable Anesthetizing Locations.

E.4.6.1 All equipment intended for use in anesthetizing locations shall be labeled by the manufacturer to indicate whether it is permitted to be used in a flammable anesthetizing location. Electric equipment presently in use shall be so labeled by the user. Labeling shall be permanent, conspicuous, and legible when the equipment is in the normal operating position *(see E.4.6.6)*.

E.4.6.2 Suction, pressure, or insufflation equipment, involving electric elements and located within the hazardous area, shall be of a type approved for use in Class I, Group C, Division 1 hazardous areas. Means shall be provided for liberating the exhaust gases from such apparatus in such a manner that gases will be effectively dispersed without making contact with any possible source of ignition.

Note that suction of pressure apparatus serving flammable anesthetizing locations but located outside such flammable anesthetizing locations need not be approved for Class I, Group C, Division 1 hazardous areas, providing the discharge from suction machines is kept away from sources of ignition.

E.4.6.3 Portable X-ray equipment intended for use in flammable anesthetizing locations shall be approved for use in Class I, Group C, Division 1 hazardous areas and shall be permitted to be provided with an approved positive-pressure system for the tube head and cables within the hazardous area *(see E.4.6.6)*. All devices and switches for X-ray equipment within the hazardous area shall conform to requirements of E.4.2 and E.6.6.5.6 and E.6.6.5.8 in this annex. X-ray equipment shall be provided with an approved method of eliminating electrostatic accumulation *(see 13.4.1.2.4 of NFPA 99 and E.6.6.5.6)*.

E.4.6.4 High-frequency equipment intended for use in flammable anesthetizing locations shall be approved for use in Class I, Group C, Division 1 hazardous areas.

Note that remote-control switches are recommended *(see E.4.3 and E.6.6.9.3)*.

Also note that for recommendations in connection with the use of cautery and high-frequency equipment in flammable anesthetizing locations, see E.6.6.8.10 and Sections E.7 and E.8; and Annex D.

E.4.6.5 Portable electric equipment, such as incubators, lamps, heaters, motors, and generators, used in flammable anesthetizing locations in which anesthesia equipment is present or in operating condition, shall comply with the requirements of Articles 500, 501, and 517 of NFPA 70, *National Electrical Code*, for Class I, Division 1 locations and shall be approved for Class I, Group C, Division 1 hazardous areas except as permitted in E.2.1 in this annex.

Note that the resistance and capacitive reactance between the conductors and the noncurrent-carrying metallic parts must be high enough to permit the use of the equipment on an ungrounded distribution system having a line isolation monitor specified in 4.3.2.6.3.

E.4.6.6 The following shall be considered exceptions to E.4.6.1 and E.4.6.5 in this annex:

(1) Equipment designed to operate on circuits of 10 volts or less. (Reserved)
(2) Portable electric or electronic equipment mounted within an enclosure and protected by an approved positive-pressure ventilating system that conforms with the following requirements shall otherwise comply with the standards of NFPA 70, *National Electrical Code*, for ordinary locations. The enclosure of such a system shall be supplied with air taken from a nonhazardous area and circulated to maintain within the enclosure a pressure of at least 1 in. (2.5 cm) of water above that of the hazardous area, and it shall be provided with means to deenergize the equipment if the air temperature exceeds 140°F (60°C) or if the pressure differential drops below 1 in. (2.5 cm) of water. The positive pressure shall be continuously maintained whether or not the equipment is in use, or means shall be provided to ensure that there are at least 10 changes of air within the enclosure before any electric equipment within the enclosure that does not comply with the requirements of E.4.4 is energized. The enclosure with its equipment shall be approved for use in Class I, Group C, Division 1 hazardous areas.
(3) Portable electric or electronic equipment, if it is mounted on a floor-borne movable assembly that will not overturn either when it is tilted through an angle of 20 degrees or when in a normal operating position a horizontal force of 25 lb (11.3 kg) is applied at a height of 5 ft (152 cm) above the floor; and if the equipment, together with its enclosure, cannot be lowered within 5 ft (152 cm) of the floor without tilting the assembly, then the equipment need not be approved for use in Class I, Group C, Division 1 hazardous areas, but shall comply with the requirements of E.4.6.5. The entire assembly shall be approved for use in flammable anesthetizing locations as defined in E.1.3.
(4) Intrinsically safe electric or electronic equipment, which is incapable of releasing sufficient electric energy under normal or abnormal conditions to cause ignition of flammable anesthetic mixtures.

E.4.6.7 Photographic lighting equipment used in flammable anesthetizing locations shall comply with the provisions of E.4.6 to prevent ignition of flammable gases. Lamps used above the hazardous area shall be suitably enclosed to prevent sparks and hot particles falling into the hazardous area. Photoflash and photoflood lamps that are not suitably enclosed shall not be used within an anesthetizing location. Neither flash tubes nor their auxiliary equipment shall be used within the hazardous area.

Note that flash tube operation can be accompanied by sparking at switches, relays, and socket contacts, and by corona discharge of flashovers from high-voltage circuits.

Copyright National Fire Protection Association
Provided by IHS under license with NFPA
No reproduction or networking permitted without license from IHS
Not for Resale

E.4.6.8 The exposed metal parts of photographic lighting equipment shall be grounded as specified in 8.4.1.2.1 of NFPA 99.

E.4.7 Low-Voltage Equipment — Flammable Anesthetizing Locations. (Specifications for portable equipment operating on low-voltage power supplies are stated in E.4.6.6 and E.6.6.)

E.5 Gas Equipment Criteria. Equipment capable of producing surface temperatures sufficient to cause chemical breakdown of the atmosphere within a patient enclosure shall not be permitted therein.

E.5.1 Where diethyl ether vapor is involved, surface temperatures shall not exceed 248°F (120°C).

E.5.2 Such a potentially hazardous atmosphere can be created by the placement in an incubator of a recently anesthetized infant or one whose mother received an inhalation anesthetic during delivery.

E.5.3 Diethyl ether vapor can produce formaldehyde upon contact with a heating element.

E.6 Additional Criteria and Guidance.

E.6.1 When this material was first published in 1941 as a separate document, the majority of inhalation anesthetics were administered with flammable agents, and fires and explosions in operating rooms occurred with disturbing frequency. Promulgation of this material by NFPA and the use of this material by hospitals has lowered the incidence of such tragedies significantly.

Since 1950, nonflammable inhalation anesthetics possessing relatively safe properties have been developed. The increasing use of these agents has curtailed, and in most institutions completely eliminated, the use of flammable agents. This change in anesthetic practice has made it desirable to delineate standards of construction and operation in facilities where flammable agents will never be used. It must be emphasized that many safety recommendations pertain to hazards other than those related to fires and explosions, e.g., electric shock. It must also be recognized that these agents might possess toxicologic hazards to patients and personnel.

This material has been formulated in the belief that, although materials and mechanical equipment must be relied upon to the fullest possible extent for the mitigation of fire, explosion, and electric shock hazards, such physical safeguards are most effective only when augmented by safety precautions conscientiously applied by operating room and supporting personnel. This section emphatically calls attention to the need for constant human diligence in the maintenance of safe practices because of the peculiar intermixing of flammable anesthetic hazards and electric shock hazards, together with the mental strain in the environment of surgical operations.

Studies of these operating room hazards by many investigators over more than 30 years have pointed to the conclusion that the greatest degree of safety possible within the limitations of our present knowledge is secured only through a completely coordinated program rather than by the application of individual and unrelated safeguards. Compliance with certain requirements of this section will be effective, or even permissible, only when accompanied by compliance with the full program of precautionary measures.

It is necessary that all personnel having any responsibility for safety in anesthesia collaborate in the precautionary program. In the case of hospitals, this will apply to members of the governing body, physicians, administrative personnel, nursing staff, and maintenance staff. Not only must such personnel achieve an understanding of the hazards involved, but, in addition, they must be reminded periodically of the dangers posed by electric shock, compressed gases and their cylinders, the explosive nature of all flammable agents, and the hazards created by oxygen-enriched atmospheres. *(See NFPA 53, Recommended Practice on Materials, Equipment, and Systems Used in Oxygen-Enriched Atmospheres.)*

For further discussion on the nature of the hazards, see C.13.1 in NFPA 99.

E.6.2 This section recognizes that some hospitals contain operating and delivery rooms designed and maintained for the use of flammable anesthetic agents. It also recognizes that there are some operating rooms and even entire operating suites designed for the exclusive use of nonflammable agents. A particular hazard exists where personnel elect to employ a flammable agent in a room not designed for it, or where a flammable agent is employed in a nonflammable anesthetizing location without taking the proper administrative steps.

E.6.3 Sections E.7 and E.8 contain proposed regulations applying to specific types of inhalation anesthetizing locations.

Section E.7 contains regulations for flammable anesthetizing locations that can be adopted by hospitals for all anesthetizing locations designed for the safe administration of flammable inhalation anesthetic agents.

Section E.8 contains regulations for mixed facilities that can be adopted by hospitals in which flammable anesthetizing locations and nonflammable anesthetizing locations coexist within the same building, allowing interchange of personnel and equipment between flammable and nonflammable anesthetizing locations.

E.6.4 Identifying Flammable Anesthetizing Locations. Anesthetizing locations shall be identified as listed in E.6.7.5.

E.6.5 Equipment Labeling. All pieces of equipment used in flammable anesthetizing locations shall be labeled to indicate that they comply with applicable safety regulations.

Note that a generally recognized mark or symbol will meet the intent of this requirement.

E.6.6 Requirements for Flammable Anesthetizing Locations.

E.6.6.1 Areas Adjoining Flammable Inhalation Anesthetizing Locations and Flammable Anesthetizing Storage Locations.

E.6.6.1.1 An adjoining area connected by a closable doorway, such as a corridor, sterilizing room, scrub room, X-ray control room, or monitoring room, where it is not intended to store or administer flammable inhalation anesthetics, is not considered a hazardous area.

E.6.6.1.2 Areas described in E.6.6.1.1 above shall be permitted to be ventilated in accordance with the applicable sections of NFPA 70, *National Electrical Code*, for ordinary locations.

E.6.6.1.3 Conductive flooring is required in these adjoining areas to remove static charges from personnel or objects before they enter the flammable inhalation anesthetizing location or agent storage location *(see E.6.6.8.2)*.

E.6.6.1.4 Postanesthesia recovery rooms are not considered to be hazardous areas unless specifically intended for the induction of inhalation anesthesia with flammable anesthetic agents *(see E.6.6.9.2)*.

Copyright National Fire Protection Association
Provided by IHS under license with NFPA
No reproduction or networking permitted without license from IHS
Not for Resale

E.6.6.1.5 All doorways leading to flammable inhalation anesthetic agent storage locations shall be identified with NFPA 704, *Standard System for the Identification of the Hazards of Materials for Emergency Response*, symbols as appropriate.

E.6.6.2 Isolated Power Systems. A local ungrounded electric system shall be provided.

Note that the isolated system reduces the ignition hazard from arcs and sparks between a live conductor and grounded metal and mitigates the hazard of shock or burn from electric current flowing through the body to ground. The latter hazard usually follows inadvertent contact with one live conductor or results from unrecognized failure of insulation.

Also note that such a system provides protection from spark and electric shock hazards due to the most common types of insulation failure. It does not, however, prevent all electric sparks or completely eliminate the possibility of electric shock from insulation failure. Patients and personnel often are wet with prepping solutions, blood, urine, and other conductive fluids that greatly reduce resistance to the passage of unintended electrical current. More than ordinary care is crucially necessary in the use and maintenance of all electric systems and equipment.

Finally note that the ungrounded electrical distribution system specified in this annex is intended to reduce the possibility of electric shocks and recurring arcs and sparks in the event of insulation failure of the electrical wiring system in anesthetizing locations. Because of the difficulty in achieving a sufficiently high level of insulation to permit operation of a line isolation monitor, and in recognition of evolving capabilities in medical care, an exception has been made so that permanently installed equipment as well as nonadjustable lighting fixtures in specified locations need not be supplied by the ungrounded system. *(See E.6.6.3 and E.6.6.4.)*

E.6.6.2.1 Hospitals complying with NFPA 56A, *Standard for the Use of Inhalation Anesthetics*, prior to 1970 shall not be required to change ground fault detectors to a line isolation monitor.

E.6.6.2.2 The isolated electric system shall be required to be explosionproof only if installed in the hazardous areas of a flammable inhalation anesthetizing location.

E.6.6.3 Power for Fixed Equipment. Approved, fixed, therapeutic, and diagnostic equipment, permanently installed outside the hazardous area of a flammable anesthetizing location, is permitted to be supplied by a grounded single- or three-phase system of less than 600 V with the following provisions:

(1) The equipment complies with 8.4.1.2.1 of NFPA 99
(2) Cord-connected accessories (such as positioning controls, aiming lights and fiberoptic light sources, slaved monitors, motorized cameras and video cameras, dosimeters, and exposure triggers) likely to come in contact with patients or personnel are supplied by isolated power at line voltage, or operate at 24 V or less, supplied by an isolating transformer
(3) Wiring is installed in accordance with NFPA 70, *National Electrical Code*, Section 517.61.

Note that it is intended that this section apply to positioning motors for patient tables associated with radiographic and other imaging equipment and to sometimes massive equipment for radiotherapy or for the delivery of other forms of energy.

E.6.6.4 Fixed Lighting. Branch circuits supplying only fixed lighting shall be permitted to be supplied by a conventional grounded system with the following provisions:

(1) Such fixtures are located at least 2.4 m (8 ft) above the floor
(2) Switches for the grounded circuits are wall-mounted and installed in accordance with NFPA 70, *National Electrical Code*, Article 517, Part D
(3) Wiring for grounded and ungrounded circuits is installed in accordance with NFPA 70, *National Electrical Code*, Article 517, Part D.

Note that wall-mounted remote-control stations for lighting control switches operating at 24 V or less can be installed in any anesthetizing location.

E.6.6.5 Ceiling-Suspended Fixtures.

E.6.6.5.1 Ceiling-suspended surgical lighting fixtures shall be supplied from an ungrounded electric distribution system *(see E.6.6.2 in this annex)*, which shall be monitored by a line isolation monitor as required by 4.3.2.6.3 of NFPA 99. Switching or dimmer devices shall control secondary circuit conductors only.

E.6.6.5.1.1 Where interruption of illumination is acceptable, as with single-filament lights, ceiling-suspended surgical lighting fixtures shall be permitted to be connected to a grounded source of supply, protected by approved individual ground fault circuit interrupters.

E.6.6.5.1.2 The secondary circuit of the ceiling-mounted surgical lighting fixture supplied by a step-down isolation transformer need not be equipped with a line isolation monitor provided that the step-down transformer is located in the same enclosure as the lamp fixture, or that the conductors carrying the current from the transformer to the lamp fixture are contained in metallic conduit that forms an integral electrical (ground) pathway between the transformer enclosure and the lamp fixture, and provided that the voltage in the secondary (lamp) circuit is not greater than 30 V.

E.6.6.5.2 The light source of ceiling-suspended surgical lighting fixtures installed above hazardous areas shall not enter the hazardous area, and, if in an enclosure, the enclosure shall not enter the hazardous area in its lowest position, unless it was approved for hazardous areas.

E.6.6.5.3 If installed above a hazardous area, fixtures with sliding contacts or arcing or sparking parts shall be installed so that in any position of use, no sliding contacts or arcing or sparking parts shall extend within the hazardous area.

E.6.6.5.4 Integral or appended switches, if installed on ceiling-suspended surgical lighting fixtures, shall be approved for use in Class I, Division 1 hazardous areas if a switch is installed in, or can be lowered into, the hazardous area.

E.6.6.5.5 Lamps installed in fixed position in hazardous areas shall be enclosed in a manner approved for use in Class I, Group C, Division 1 hazardous areas and shall be properly protected by substantial metal guards or other means where exposed to breakage. Lamps shall not be of the pendant type unless supported by and supplied through hangers of rigid conduit or flexible connectors approved for use in Class I, Division 1 hazardous areas in accordance with Section 501.9(A) or Section 501.9(B) of NFPA 70, *National Electrical Code*.

E.6.6.5.6 Tube heads and cable of permanently installed X-ray equipment in flammable anesthetizing locations shall be approved for use in Class I, Group C atmospheres.

Copyright National Fire Protection Association
Provided by IHS under license with NFPA
No reproduction or networking permitted without license from IHS
Not for Resale

E.6.6.5.7 Film viewing boxes in hazardous areas shall either comply with the requirements of Section 501.9(A) of NFPA 70, *National Electrical Code*, or they shall be of a type that excludes the atmosphere of the room. If located above the 5 ft (152 cm) level in a flammable anesthetizing location or mixed facility, or in a nonflammable anesthetizing location, the film viewing box shall be permitted to be of the totally enclosed type or so constructed as to prevent the escape of sparks or hot metal. Such viewing boxes shall be permitted to be connected to a conventional grounded supply circuit if the device is protected by an approved system of double insulation. Where such an approved system is employed, the equipment shall be distinctly marked.

E.6.6.5.8 Control units and other electric apparatus installed or intended for use in a flammable anesthetizing location shall comply with the requirements of NFPA 99 and Section E.4 of this annex *(see also E.6.6.5.4 and E.6.7.6)*.

E.6.6.6 Signaling and Communications Systems. All equipment of signaling and communications systems in hazardous areas, irrespective of voltage, shall be of a type approved for use in Class I, Group C, Division 1 hazardous areas in accordance with Section 501.14(a) or Section 501.14(b) of NFPA 70, *National Electrical Code*.

E.6.6.7 Piping. Subsection E.6.3 prohibits the piping of flammable anesthetic gases *(see 5.1.13.1.1)*.

E.6.6.8 Reduction in Electrostatic Hazard.

E.6.6.8.1 Purpose.

E.6.6.8.1.1 The requirements of this section have been promulgated to reduce the possibility of electrostatic spark discharges, with consequent ignition of flammable gases *(see E.6.6.8)*.

E.6.6.8.1.2 The prevention of the accumulation of static charges revolves about a number of safeguards that shall be complied with in flammable anesthetizing locations; in corridors and passageways adjacent thereto; in rooms connecting directly to anesthetizing locations, such as scrub rooms and sterilizing rooms; and in storage locations for flammable anesthetics located in an operating suite.

E.6.6.8.1.3 The methods employed to prevent such accumulation include the installation of conductive flooring *(see E.6.6.8.2)*, the maintenance of the relative humidity at 50 percent at least, and the use of certain items of conductive equipment, accessories, and wearing apparel.

E.6.6.8.2 Conductive Flooring. Note that a conductive floor serves as a convenient means of electrically connecting persons and objects together to prevent the accumulation of electrostatic charges.

A resistance not exceeding 50 megohms between objects or persons is generally sufficient to prevent accumulation of dangerous voltages. The upper limit of 1,000,000 ohms for the resistance of the floor has been chosen as meeting this requirement with a reasonable factor of safety and with reasonable provision for other resistances in the conductive path.

The resistance of some flooring materials changes with age. Floors of such materials should have an initial resistance that permits changes in resistance with age without exceeding the limits prescribed in E.6.6.8.2.3 and E.6.6.8.2.4.

E.6.6.8.2.1 Conductive flooring shall be installed in those areas specified in E.6.6.8.1.2. Conductive flooring installed in corridors or passageways in compliance with E.6.6.8.1.2 shall extend the width of the corridor and along the corridor a minimum of 9.84 ft (3 m) on each side of door frames.

E.6.6.8.2.2 A conductive floor shall meet the resistance provisions through its inherent conductive properties. The surface of the floor in the locations specified by E.6.6.8.1.2 and E.6.6.8.2.1 shall provide a patch of moderate electric conductivity between all persons and equipment making contact with the floor to prevent the accumulation of dangerous electrostatic charges. No point on a nonconductive element in the surface of the floor shall be more than ¼ in. (6.4 mm) from a conductive element of the surface, except for insulated floor drains.

E.6.6.8.2.3 The resistance of the conductive floor shall be less than an average of 1,000,000 ohms, as measured in accordance with E.6.6.8.2.7.

E.6.6.8.2.4 The resistance of the floor shall be more than an average of 25,000 ohms, as measured in accordance with E.6.6.8.2.7.

E.6.6.8.2.5 A deliberate connection of the conductive floor to the room ground shall not be required.

E.6.6.8.2.6 The resistance of conductive floors shall be initially tested prior to use. Thereafter measurements shall be taken at intervals of not more than one month. A permanent record of the readings shall be kept.

E.6.6.8.2.7 The following test method shall be used *(see E.6.6.12)*:

(1) The floor shall be clean and dry, and the room shall be free of flammable gas mixtures.
(2) Each electrode shall weigh 5 lb (2.268 kg) and shall have a dry, flat, circular contact area 2½ in. (6.35 cm) in diameter, which shall comprise a surface of aluminum or tin foil 0.0005 in. (0.013 mm) to 0.001 in. (0.025 mm) thick, backed by a layer of rubber ¼ in. (6.4 mm) thick and measuring between 40 and 60 durometer hardness as determined with a Shore Type A durometer (ASTM D2240-91).
(3) Resistance shall be measured by a suitably calibrated ohmmeter that shall have a nominal open circuit output voltage of 500 V dc and a nominal internal resistance of not less than 100,000 ohms, with tolerance defined as follows:
    (a) Short-circuit current of from 2.5 mA to 5 mA.
    (b) At any value of connected resistance, *Rx*, the terminal voltage, V, shall be

$$\frac{Rx}{Rx + \text{internal resistance}} \times 500\ \text{V} \pm 15\%$$

(4) Measurements shall be made between five or more pairs of points in each room and the results averaged. For compliance with E.6.6.8.2.3 in this annex, the average shall be within the limits specified and no individual measurement value shall be greater than 5 megohms, as measured between two electrodes placed 3 ft (91 cm) apart at any points on the floor. For compliance with E.6.6.8.2.4, the average value shall be no less than 25,000 ohms with no individual measurement's value less than 10,000 ohms as measured between a ground connection and an electrode placed at any point on the floor, and also as measured between two electrodes placed 3 ft (91 cm) apart at any points on the floor. There is no upper limit of resistance for a measurement between a ground connection and an electrode placed on the conductive floor.

Copyright National Fire Protection Association
Provided by IHS under license with NFPA
No reproduction or networking permitted without license from IHS
Not for Resale

Note that if the resistance changes appreciably with time during a measurement, the value observed after the voltage has been applied for about 5 seconds can be considered to be the measured value.

E.6.6.8.3 Accessories. Coverings of operating tables, stretcher pads, pillows and cushions, etc., shall be fabricated from conductive materials throughout. Conductive sheeting shall be tested on a nonconductive surface. The resistance between two electrodes placed 3 ft (91 cm) apart, or as close to this distance as the size of the material will permit, on the same surface, and between two electrodes placed in the middle of opposite surfaces, shall not exceed 1 megohm. Individual items covered with conductive sheeting shall be tested on a metal surface. The resistance between an electrode placed on the upper surface of the covered item and another electrode placed on the metal surface shall not exceed 1 megohm. The electrodes and ohmmeter used for these tests shall be of the type specified in E.6.6.8.2.7(2) and E.6.6.8.2.7(3), respectively.

E.6.6.8.4 Interconnecting Conductive Accessories.

E.6.6.8.4.1 All accessories that are required to be resilient or flexible on the anesthesia machine, and that form part of an interconnecting electrically conductive pathway, such as tubing, inhalers, rebreathing bags, headstraps, retainers, face masks, handbulbs, and similar items, shall be of conductive material throughout. Electric resistance of such accessories shall be not greater than 1 megohm when tested as specified in E.6.6.8.5.1.

E.6.6.8.4.2 High-pressure flexible tubing used to interconnect the gas anesthesia apparatus with the central piping station outlets shall be antistatic and shall be conductive throughout with a maximum resistance of 100,000 ohms per linear foot during the specified life of the material.

Note that when a nonconductive endotracheal catheter is in use, the conductive path from the patient to the anesthesia machine should be maintained by the use of a conductive headstrap.

E.6.6.8.4.3 Tubing and connectors used for suctioning shall provide a continuous electrically conductive pathway to the vacuum bottle and to the vacuum outlet. The materials used shall be conductive throughout or, where it is necessary for visual monitoring, shall be permitted to be of antistatic material with antistatic properties good for the specified life of the material provided the tubing or connector embodies a continuous integral conductive pathway designed so that in normal use the conductive pathway shall make and maintain conductive contact with conducting materials. Electric resistance of such tubing and connectors shall be not greater than 1 megohm when tested as specified in E.6.6.8.5 in this annex.

Note that specified life refers to the permanence of the antistatic property with respect to the stated life of the material, including storage, and is of particular importance if the material is expected to be used and cleaned (e.g., washed) several times.

E.6.6.8.4.4 All belting used in connection with rotating machinery shall have incorporated in it sufficient material to prevent the development of electrostatic charges. A conductive pulley shall be used.

Note that the conductivity of the path from the pulley to the ground should be considered. If ball bearings are used, the contact between the balls and the races will probably be sufficient when bearings are lubricated with graphitized oil or grease. If sleeve bearings are used, some means of conducting the charge from the pulley should be provided.

E.6.6.8.4.5 Wherever possible, items that are not parts of a machine shall be of conductive materials throughout, particularly where the item is depended on to provide a conductive pathway between other conductive items and/or the patient *(see second paragraph of E.6.6.8.4.2)*.

Note that for essential elements in surgery, such as prosthetic and therapeutic devices, bacterial barriers, instruments, gloves (thermoplastic: for example, PVC), or biomechanical equipment, antistatic materials should be used if conductive materials are not available or are impractical. Any material can be employed if clearly nonhazardous owing to improbability of acquiring and holding a significant charge, e.g., suction catheter, endotracheal tube, plastic inserts in joint prostheses.

E.6.6.8.4.6 Nonconductive, nonantistatic parts shall be used where necessary as electric insulators or heat-insulating handles on approved devices. Where exposed metal parts of machines of necessity are insulated from each other by other nonconductive parts, they shall be electrically interconnected. The resistance of the grounding path between these metal parts shall not exceed 0.1 ohm.

E.6.6.8.4.7 Antistatic materials are not acceptable where they are relied upon to provide an interconnecting electrically conductive pathway.

E.6.6.8.5 Testing for Conductivity.

E.6.6.8.5.1 An ohmmeter of the type specified in E.6.6.8.2.7(3) shall be used for testing. Where possible, electrodes shall be of the type to make contact with metal positions across which it is desired to ensure a conductive pathway provided by the accessory, but care must be taken to ensure that the placing of the electrodes has not inadvertently provided an alternate conductive path to that under test; or, electrodes shall be of the type specified in E.6.6.8.2.7(2), where applicable; or, equivalent electrode contact shall be employed as practical. All items that are parts of a machine, such as tubing, bags, face masks, etc., shall be tested either in place or detached from the machine in accordance with one of the methods listed under E.6.6.8.5.2 through E.6.6.8.5.8.

E.6.6.8.5.2 When tested in place on the machine, it is first necessary to purge the entire system of flammable or explosive gases. The anesthesia jar and cylinders of flammable gases shall be removed from the machine and all the remaining parts purged by flowing air through them in sufficient quantity to assure that all residual anesthetic gases have been removed. All parts shall be tested and each part shall be tested separately.

E.6.6.8.5.3 For interconnecting parts that are to be classed as conductive throughout, one electrode shall be attached in a satisfactory manner to the metal frame of the machine, and the conductivity shall be determined by measuring the resistance between this first electrode and a second electrode consisting of a metal band snugly fitted around the midpart of the item being tested, or, for face masks and similar objects, between the first electrode and a second electrode *[see E.6.6.8.2.7(2)]* resting on the item.

E.6.6.8.5.4 For interconnecting parts that are to be classed as antistatic with a continuous integral conductive pathway, the conductivity test shall be performed as given in E.6.6.8.5.1 above except that, in place of the metal band electrode or the standard electrode of E.6.6.8.2.7(2), there shall be a suitable

Copyright National Fire Protection Association
Provided by IHS under license with NFPA
No reproduction or networking permitted without license from IHS
Not for Resale

second electrode making contact with the part in a manner that simulates the actual second contact area made when the part is connected for use.

E.6.6.8.5.5 Metal parts of machines that are required to be apparently insulated from each other by other nonconductive parts shall be suitably tested for electric interconnection; this shall be permitted to be an ohmmeter test. The resistance of the grounding path between these metal parts shall not exceed 0.1 ohm.

E.6.6.8.5.6 When tubing and other accessories are tested for conductivity while detached from a machine, each part shall be fitted with a clean brass nipple of the same outside diameter as the connector by which the part is normally connected to the machine. A nipple shall be inserted into each such opening of the part. When two or more nipples are involved, satisfactory conductivity shall be determined by measuring the resistance between nipples. If only one nipple is involved, as in the case of a face mask or breathing bag, the resistance shall be measured between the nipple and another electrode suitably connected elsewhere (e.g., a standard electrode resting on the part).

E.6.6.8.5.7 While the above are given as standard test methods, where these methods cannot be applied, an equivalent test method is permitted to be used. Interconnecting conductivity is acceptable if the measured resistance is not greater than 1 megohm.

E.6.6.8.5.8 Conductive items containing antistatic material shall have the antistatic properties tested as described in E.6.6.8.6.3 and E.6.6.8.6.4.

E.6.6.8.6 Antistatic Accessories and Testing.

E.6.6.8.6.1 For conductive accessories containing antistatic material see E.6.6.8.4.1 and E.6.6.8.4.3; the antistatic material of these accessories shall be tested as given in E.6.6.8.6.3 and E.6.6.8.6.4. For other individual items that are permitted to be of antistatic material, see E.6.6.8.4.5.

E.6.6.8.6.2 Plastic sheeting, film, and other nontextile, nonmetal materials, if not required to form a conductive interconnecting pathway between machines, objects, and persons, need not be conductive but shall be of antistatic material except as given in E.6.6.8.4.5. They shall be of antistatic material throughout their specified life when tested as described in E.6.6.8.6.3 and E.6.6.8.6.4.

E.6.6.8.6.3 Antistatic sheeting, film, and textiles shall meet the specified requirements of at least one of the following test methods when preconditioned at 50 percent ± 2 percent RH at 23° ± 1°C for 25 hours or until equilibrium is reached, and tested at 50 percent ± 2 percent RH at 23° ± 1°C.

Method 4046 of Federal Test Method Standard 101B. After the specimen has received its maximum charge from the application of 5000 V, the time for the indicated specimen potential to drop to 10 percent of its maximum value shall not exceed ½ second.

Note that the static detector head should be of a type that is adequately shielded to minimize responses to potentials on the electrodes, and other stray pickup. The sample is held between electrically interconnected electrodes. The 5000 V are applied to the electrodes for 10 seconds after the indicated potential of the sample reaches equilibrium before the charge decay rate is measured.

Method 76 of the AATCC. Applied voltage should be 102 V per in. (40 V per cm) of interelectrode spacing. The measured resistivity shall be less than 1×10^{11} ohms per unit square of material.

E.6.6.8.6.4 Antistatic items other than sheeting, film, and textiles shall be tested in a manner as closely as possible equivalent to that given in E.6.6.8.6.3.

E.6.6.8.6.5 The supplier of conductive and antistatic accessories shall certify that the item or items supplied meet the requirements of one of the tests specified in E.6.6.8.6.3. The supplier shall certify the conditions of storage, shelf life, and, in the case of reusable items, the methods of repreparation necessary to allow the product or device to return to its antistatic or conductive properties.

E.6.6.8.7 Conductive Footwear.

E.6.6.8.7.1 The resistance of any static conductive footwear or any equivalent static conductive device used in conjunction with nonconductive footwear shall have a value before the item is first put in use not exceeding 500,000 ohms when tested in the following manner. The static conductive shoe or any equivalent static conductive device attached to a nonconductive shoe shall have clean contact surfaces. It shall be placed on a nonoxidizing metal plate wetted with water. A brass electrode having a contact area of 1 sq in. (6.5 sq cm) shall be placed on the inside of the sole or heel of the shoe after the surface under the electrode has been wetted by water. The resistance shall be measured between the plate and the electrode using a dc ohmmeter supplying a potential in excess of 100 V [e.g., see E.6.6.8.2.7(3)].

E.6.6.8.7.2 In the case of static conductive booties, the test shall be made as follows: The bootie shall be laid flat on an insulating surface. Two brass electrodes, each 1.5 in. (3.8 cm) long, having a contact area of 1 sq in. (6.5 sq cm), shall be used. One electrode shall be placed on the bootie near the toe and on the part of the bootie that normally comes in contact with the floor. The other electrodes shall be placed on the ankle section. The booties shall be wetted under the electrodes only.

E.6.6.8.7.3 If the tests as here described are not technically feasible for the device under consideration, an alternative equivalent means of testing shall be used. The static conductive footwear and any static conductive device used with nonconductive footwear shall also meet, during use, the requirements of E.6.6.10.1 through E.6.6.10.3 and E.6.6.13.3.

E.6.6.8.7.4 For protection of personnel against electric shock and high-frequency burns, static conductive footwear and equivalent static conductive devices shall not have any metal parts (nails, etc.) that normally come in contact with the floor.

E.6.6.8.8 Textiles. See also E.6.6.10.4 through E.6.6.10.6.

E.6.6.8.8.1 Silk, wool, synthetic textile materials, blends of synthetic textile materials with unmodified cotton or rayon, or nonwoven materials shall not be permitted in hazardous locations as outer garments or for nonapparel purposes, unless such materials have been tested and found to be antistatic by meeting the requirements of E.6.6.8.6.3.

In the case of reusable materials, the manufacturer shall certify that the antistatic properties shall be maintained through 50 wash-autoclave cycles or throughout the useful life of the material, whichever is greater.

Copyright National Fire Protection Association
Provided by IHS under license with NFPA
No reproduction or networking permitted without license from IHS
Not for Resale

In the case of nonreusable materials, the manufacturer shall certify that the antistatic properties shall be maintained throughout the useful life of the material.

Note that it is preferable to use only one textile material because static electricity is more readily generated by contact between articles of different materials than by contact between articles of the same material.

E.6.6.8.9 Furniture. Note that in its requirement for furniture in a flammable anesthetizing location to be constructed of conductive materials, the Subcommittee on Anesthesia Services specifically intends that any shelves within such furniture as well as the top also be conductive. Furniture is intended to include movable and permanently installed objects in the room, such as stools, tables, and cabinets. Wooden racks, however, are permitted for storage of cylinders of flammable as well as nonflammable gases.

E.6.6.8.9.1 If the furniture is conductive but not made of metal, then it shall have casters, tires, or legs of metal, conductive rubber, or equivalent conductive material with a floor contact surface having one dimension of at least ⅝ in. (1.58 cm). Approved equivalent means of making conductive contact between the piece of furniture and the floor is acceptable, provided the contact device is securely bonded to the piece of furniture and is of material that will not oxidize under conditions of normal use (so as to decrease the conductivity of the circuit), and that uninterrupted contact with the floor is at least ⅝ in. (1.6 cm) in one dimension *(see also E.6.6.13.4)*.

E.6.6.8.9.2 Surfaces on which movable objects are placed shall be without insulating paint, lacquer, or other nonconductive finish.

Note that an economical way to make painted furniture conform to this requirement is to attach unpainted sheet metal to the furniture's shelf or top with screws, rivets, or similar fasteners that provide electrical continuity to the frame and casters of the furniture.

E.6.6.8.9.3 The resistance between the conductive frame of the furniture referred to in E.6.6.8.9.2 and a metal plate placed under one supporting member but insulated from the floor shall not exceed 250,000 ohms, measured with an ohmmeter of the type described in E.6.6.8.2.7(3).

E.6.6.8.10 High-Frequency Equipment. Potential sources of ignition, such as electrosurgical units, shall be prohibited during the administration of flammable anesthetizing agents.

E.6.6.9 General Requirements for Flammable Anesthetizing Locations.

E.6.6.9.1 Hospital authorities in consultation with others as noted in 7.2.2.1 shall adopt regulations to control apparel and footwear allowed, the periodic inspection of conductive materials, the control of purchase of static-conductive and antistatic materials, and the testing of conductive floors.

E.6.6.9.2 All required precautions shall apply to all anesthetizing locations in which flammable inhalation anesthetics are used.

E.6.6.9.3 Hospital regulations shall be established and enforced to control the use of electronic equipment such as television equipment, diathermy equipment, public address systems, monitoring equipment, and similar electronic and high-frequency apparatus in the presence of flammable inhalation anesthetic agents.

E.6.6.9.4 Hospital regulations shall prohibit the use of X-ray equipment in flammable anesthetizing locations if such equipment is not approved for operation in hazardous locations *(see E.6.6.5.6, E.6.6.5.7, and E.4.6.3)*.

E.6.6.9.5 Covers of fabric or of any form of sheeting shall not be used on anesthesia equipment capable of utilizing flammable anesthetizing agents because a cover will confine gas that could leak from a cylinder.

Note that when the cover is removed from the anesthesia machine under such conditions, a static charge might be created that could ignite the gas confined beneath the cover.

E.6.6.9.6 The use of rebreathing techniques in administering flammable anesthetic agents at all times is highly desirable. Through the use of these techniques, the escape of flammable mixtures is substantially limited.

E.6.6.9.7 Residual ether remaining in ether vaporizers at the end of each day shall be returned to its original containers for disposal or laboratory use only. The ether vaporizer, container, and such shall be thoroughly washed and dried before being returned to use *(see C.13.1.3)*.

E.6.6.9.8 Waste liquid ether and other flammable volatile liquid inhalation anesthetic agents shall be disposed of outside of the hospital building according to the recommendations of the authority having jurisdiction. One method is to allow the agent to evaporate in a shallow pan, well removed from possible sources of ignition under supervision.

E.6.6.9.9 Members of the professional staff shall be required to submit for inspection and approval any special equipment they wish to introduce into flammable anesthetizing locations *(see 13.4.1.2.4.5)*. Such equipment shall be approved for use in Class I, Group C, Division 1 hazardous areas or comply with E.4.6.5. It shall be equipped with approved cords and attachment plugs *[see 8.4.1.2.4(1), 8.4.1.2.4(2), and E.2.4]*.

E.6.6.9.10 High-frequency electric and electronic equipment, such as electrosurgery amplifiers, monitors, recorders, television cameras, portable electrical tools, maintenance equipment, and certain sterilizing equipment that does not comply with the provisions of E.4.6.5 shall not be used when flammable inhalation anesthetic agents are being administered.

Cautery and electric surgical equipment shall not be used during procedures involving flammable inhalation anesthetic agents unless the equipment complies with the requirements of E.4.6.4.

See Annex D.

E.6.6.10 Electrostatic Safeguards. Paragraph E.6.6.8 deals with the elements required to be incorporated into the structure and equipment to reduce the possibility of electrostatic spark discharges, which are a frequent source of the ignition of flammable anesthetic agents. The elimination of static charges is dependent on the vigilance of administrative activities in material selection, maintenance supervision, and periodic inspection and testing. It cannot be too strongly emphasized that an incomplete chain of precautions will generally increase the electrostatic hazard. For example, conductive flooring *(see E.6.6.8.2)* can contribute to the hazard unless all personnel wear conductive shoes and unless all objects in the room are electrically continuous with the floor.

E.6.6.10.1 All personnel entering flammable anesthetizing locations, mixed facilities, or storage locations for flammable

Copyright National Fire Protection Association
Provided by IHS under license with NFPA
No reproduction or networking permitted without license from IHS
Not for Resale

anesthetics located in the surgical suite shall be in electrical contact with the conductive floor through the wearing of conductive footwear or an alternative method of providing a path of conductivity. The provision of conductive floors in corridors and rooms directly communicating with flammable anesthetizing locations *(see E.6.6.8.2)* will minimize the possibility of static discharge from patients or personnel entering such anesthetizing locations.

Note that one method for electrically connecting all persons to conductive floors is through the wearing of shoes conforming to the following specifications.

Each shoe having a sole and heel of conductive rubber, conductive leather, or equivalent material should be so fabricated that the resistance between a metal electrode placed inside the shoe and making contact with the inner sole equivalent in pressure and area to normal contact with the foot, and a metal plate making contact with the bottom of the shoe, equivalent in pressure and area to normal contact with the floor, be not more than 250,000 ohms.

E.6.6.10.2 Electric connection of the patient to the operating table shall be ensured by the provision of a high-impedance strap in contact with the patient's skin, with one end of the strap fastened to the metal frame of an operating table.

E.6.6.10.3 Because of the possibility of percussion sparks, shoes having ferrous nails that make contact with the floor shall not be permitted in flammable anesthetizing locations or mixed facilities or in storage locations for flammable anesthetic agents in the surgical suite.

E.6.6.10.4 Silk, wool, or synthetic textile materials, except rayon, shall not be permitted in flammable anesthetizing locations or mixed facilities as outer garments or for nonapparel purposes, unless these materials have been approved as antistatic in accordance with the requirements of E.6.6.8.6.3 and E.6.6.8.6.4.

Note that rayon refers to regenerated cellulose, not cellulose acetate. Cotton and rayon must be unmodified; i.e., must not be glazed, permanently starched, acetylated, or otherwise treated to reduce their natural hygroscopic quality. Fabrics of intimate blends of unmodified cotton or rayon with other textile materials are not acceptable unless tested and found to be antistatic.

E.6.6.10.5 Hosiery and underclothing in which the entire garment is in close contact with the skin shall be permitted to be of silk, wool, or synthetic material.

E.6.6.10.6 Undergarments with free-hanging skirts, such as slips or petticoats, shall be of cotton, rayon, or other materials demonstrated to be antistatic by the requirements of E.6.6.8.6.3 and E.6.6.8.6.4.

E.6.6.10.7 Antistatic materials for use in flammable anesthetizing locations shall be handled and used in the following manner:

(1) Antistatic materials shall be stored at the temperature and humidity required for flammable anesthetizing locations or they shall be allowed to equilibrate to the humidity and temperature of the flammable anesthetizing location prior to use.
(2) Antistatic materials shall be stored in such a manner that will ensure that the oldest stocks will be used first.
(3) Controls shall be established to ensure that manufacturers' recommendations as to use are followed in the case of antistatic materials.

E.6.6.10.8 All antistatic accessories intended for replacement, including belting, rubber accessories, plastics, sheeting, and the like, shall meet pertinent requirements for conductivity as specified in E.6.6.8.6.

E.6.6.11 Discretionary Use of Nonconforming Materials.

E.6.6.11.1 Suture material, alloplastic or therapeutic devices, bacterial barriers, instruments, gloves (thermoplastic), surgical dressings, and biologic interfaces of these otherwise prohibited materials shall be permitted to be used at the discretion of the surgeon.

E.6.6.11.2 Disposable supplies that contribute to the electrostatic hazard shall be so labeled on the unit package.

E.6.6.12 Maintenance of Conductive Floors.

E.6.6.12.1 The surface of conductive floors shall not be insulated by a film of oil or wax. Any waxes, polishes, or dressings used for maintenance of conductive floors shall not adversely affect the conductivity of the floor.

E.6.6.12.2 Floors that depend upon applications of water, salt solutions, or other treatment of a nonpermanent nature for their conductivity are not acceptable.

E.6.6.12.2.1 Treatment of the floor to modify conductivity shall be considered permanent provided the floor meets the requirements of E.6.6 for a period of not less than 2 years, during which no change or modification beyond normal washing is performed.

E.6.6.12.3 Cleaning procedures for conductive floors shall be established, then carefully followed to assure that conductivity characteristics of the floor are not adversely affected by such treatment.

E.6.6.12.4 Conductive floors shall be tested as specified in E.6.6.8.2.

E.6.6.13 Other Conductive Equipment.

E.6.6.13.1 The resistance of conductive accessories shall be tested prior to use as described in E.6.6.8.3 or E.6.6.8.4. Thereafter, measurements shall be taken at intervals of not more than 1 month. A permanent record of the readings shall be kept.

E.6.6.13.2 Antistatic plastics shall meet the requirements of E.6.6.8.6.2. It shall be the responsibility of the hospital to ensure that antistatic sheeting, etc., is used in accordance with the manufacturer's instructions. Failure to do so could in some cases lead to loss of antistatic properties. Antistatic materials that are reused (e.g., antistatic tubing incorporating a continuous conductive pathway as described in E.6.6.8.4.1) shall be tested *(see E.6.6.8.6.1)* periodically to ensure retention of conductive properties.

E.6.6.13.3 Conductive footwear and other personnel-to-floor connective devices shall be tested on the wearer each time they are worn. An approved resistance-measuring device having a short-circuit current not exceeding 0.5 mA shall be used.

Note that the reading may be taken between two insulated, nonoxidizing, metal plates so located that the wearer can stand in a normal manner with a foot on each, in which case the indicated resistance shall not exceed 1,000,000 ohms (1 megohm). *(See also the second paragraph of E.6.6.10.1.)*

E.6.6.13.4 The resistance of furniture *(see E.6.6.8.9)* and equipment shall be tested prior to use as described in E.6.6.8.9.3. Thereafter, measurements shall be taken at intervals of not more than 1 month. A permanent record of the readings shall be kept.

Copyright National Fire Protection Association
Provided by IHS under license with NFPA
No reproduction or networking permitted without license from IHS
Not for Resale

The monthly tests can conveniently consist of measurements of the resistance between an electrode placed on the floor and an electrode placed successively on each article of furniture in the room. Additional tests of any individual item shall be made if the measured resistance exceeds 5 megohms.

E.6.6.13.5 Periodic inspection shall be made of leg tips, tires, casters, or other conductive devices on furniture and equipment to ensure that they are maintained free of wax, lint, or other extraneous material that insulates them and defeats the purpose for which they are used, and also to avoid transporting to conductive floors such materials from other areas.

E.6.6.13.6 Excess lubrication of casters shall be avoided to prevent accumulation of oil on conductive caster wheels and sides. Dry graphite or graphitized oil are preferable lubricants.

E.6.7 Requirements for Mixed Facilities. A serious behavioral hazard exists in a "mixed facility," i.e., where there are some rooms where flammable agents are prohibited. In the latter situation, inadvertent use of a flammable agent in the "nonflammable" room could be disastrous. It is important to understand the regulations recommended in Section E.7.

E.6.7.1 General. The mixed facility is defined in E.1.6.

E.6.7.2 Construction of Anesthetizing Locations and Storage Locations.

E.6.7.2.1 Flammable anesthetizing locations shall be designed, constructed, and equipped as stated in 13.4.1.2 and E.6.6.

E.6.7.2.2 Nonflammable anesthetizing locations shall be designed, constructed, and equipped as stated in 13.4.1.2.

E.6.7.2.3 Storage locations for flammable anesthetics shall be constructed as provided in E.6.8. Storage locations for nonflammable medical gas cylinders shall be constructed as provided in 5.1.3.3.2 and 5.1.3.3.3.

E.6.7.3 Conductive Flooring in Posted Nonflammable Anesthetizing Locations Within a Mixed Facility. (Reserved)

E.6.7.4 Provision for Connection of Patient to Operating Table. Electric connection of the patient to the operating table shall be ensured by the provision of a high-resistance (conductive) strap in contact with the patient's skin, with one end of the strap fastened to the metal frame of an operating table.

E.6.7.5 Precautionary Signs.

E.6.7.5.1 The entrances to all anesthetizing locations shall be identified by prominently posted signs denoting individually whether the anesthetizing location is designed for flammable inhalation anesthetic agents or for nonflammable anesthetic agents.

Note the following suggested explanatory texts of such signs:

SUITABLE FOR USE WITH FLAMMABLE INHALATION ANESTHETIC AGENTS

or

RESTRICTED TO NONFLAMMABLE INHALATION ANESTHETIC AGENTS

E.6.7.5.2 In addition, a removable sign shall be posted to all entrances to the anesthetizing location indicating whether a flammable inhalation anesthetic agent is being employed.

Note the following suggested explanatory text of such a sign:

CAUTION

FLAMMABLE INHALATION ANESTHETIC IN USE

OBSERVE AND OBEY ALL SAFETY REGULATIONS

E.6.7.5.3 It shall be the responsibility of the anesthesiologist or nurse anesthetist to ensure that the room is suitably designated for use of the particular agent, whether flammable or nonflammable.

E.6.7.5.4 Regulations for the conduct of personnel, administration, and maintenance in mixed facilities shall be posted in at least one prominent location within the operating and, if applicable, delivery suite *(see E.6.2.)* Suggested text of such regulations is contained in Section E.8.

E.6.7.6 Movable Equipment and Furniture.

E.6.7.6.1 All equipment intended for use in both flammable and nonflammable anesthetizing locations shall meet the antistatic requirements of E.6.6.8.

E.6.7.6.2 Equipment intended for use only in nonflammable anesthetizing locations shall be labeled in accordance with E.4.6.1 and shall not be introduced into flammable anesthetizing locations. This equipment is not required to meet the antistatic requirements of E.6.6.8.

E.6.7.6.3 No portable equipment, including X-ray equipment, shall be introduced into mixed facilities unless it complies with the requirements of E.4.6.3 and is approved for use in Class I, Group C, Division 1 hazardous areas, or unless it is prominently labeled for use only in the presence of nonflammable anesthetic agents and then restricted to such use.

E.6.7.6.4 Portable electric equipment, such as incubators, lamps, heaters, motors, and generators used in mixed facilities in which flammable anesthetics are being employed shall comply with the requirements of Articles 500, 501, and 517 of NFPA 70, *National Electrical Code*, for Class I, Division 1 locations and shall be approved for Class I, Group C, Division 1 hazardous areas, except as permitted in E.4.6.6.

Note that the resistance and capacitive reactance between the conductors and the noncurrent-carrying metallic parts must be high enough to permit the use of the equipment on an ungrounded distribution system having a line isolation monitor specified in 4.3.2.6.3 of NFPA 99.

E.6.7.6.5 Furniture intended for use in both flammable and nonflammable anesthetizing locations of mixed facilities shall meet the antistatic requirements of E.6.6.8.9.

E.6.7.6.6 Furniture intended for use only in nonflammable anesthetizing locations of mixed facilities shall comply with E.6.6.8.9 or shall be conspicuously labeled and not be introduced into flammable anesthetizing locations.

E.6.8 Storage Locations for Flammable Anesthetic Agents (Any Quantity).

E.6.8.1 Enclosures in which flammable inhalation anesthetic agents are stored shall be individually and continuously ventilated by gravity or by mechanical means at a rate of not less than eight air changes per hour. The fresh-air inlet and the exhaust-air outlet within the enclosure shall be located as far apart as feasible consistent with the enclosure layout. The fresh-air inlet shall be located at or near the ceiling, and the

Copyright National Fire Protection Association
Provided by IHS under license with NFPA
No reproduction or networking permitted without license from IHS
Not for Resale

bottom of the exhaust-air outlet shall be located 3 in. (7.6 cm) above the floor. The fresh-air supply shall be permitted to be heated. Exhaust air shall be discharged to the exterior of the building at least 12 ft (3.6 m) above grade in a manner to prevent its reentry into the building.

E.6.8.2 Exhaust fans shall have nonsparking blades. The fan motor shall be connected into the equipment system (either automatic or delayed restoration) *(see Chapter 4)*. All electric installations shall conform to NFPA 70, *National Electrical Code*, and, when inside the storage area or exhaust duct, shall be approved for use in Class I, Division 2, Group C locations. A visual signal that indicates failure of the exhaust system shall be installed at the entrance to the storage area.

Note that exhaust fans in all new installations, and whenever possible in existing installations, should be located at the discharge end of the exhaust duct.

E.6.8.3 Approved fire dampers shall be installed in openings through the required fire partition in accordance with the requirements of NFPA 90A, *Standard for the Installation of Air-Conditioning and Ventilating Systems*.

E.6.8.4 Enclosures shall not be used for purposes other than storage of flammable inhalation anesthetic agents.

E.6.8.5 Flooring shall comply with E.6.6.8.2.1.

E.6.8.6 Electric wiring and equipment in storage locations for flammable inhalation anesthetic agents shall comply with the requirements of NFPA 70, *National Electrical Code*, Article 500, Class I, Division 2, and equipment used therein shall be approved for use in Class I, Division 1, Group C hazardous areas *(see 4.3.3.1 in NFPA 99 for grounding requirements)*.

E.6.8.7 The provisions of E.6.6.2 for ungrounded electric distribution systems do not apply to storage locations for flammable agents.

E.6.8.8 Storage locations for flammable anesthetics shall meet the construction requirements stated in 5.1.3.3.2 and 5.1.3.3.3 and shall be ventilated as provided in E.6.6.8.

E.6.8.9 Flammable inhalation anesthetizing agents shall be stored only in such locations. Flammable inhalation anesthetizing agents shall not be stored in anesthetizing locations, except for cylinders of flammable anesthetic agents connected to a gas anesthesia apparatus.

E.6.8.10 Cylinders containing flammable gases (e.g., ethylene and cyclopropane) and containers of flammable liquids (e.g., diethyl ether, divinyl ether, ethyl chloride) shall be kept out of proximity to cylinders containing oxidizing gases (e.g., oxygen or nitrous oxide) through the use of separate rooms.

E.6.8.11 Storage locations for flammable inhalation agents shall be kept free of cylinders of nitrous oxide, compressed air, oxygen, and mixtures of oxygen.

E.6.8.12 Sources of illumination and ventilation equipment in storage locations for flammable inhalation anesthetic agents, wherever located, and especially in storage locations that are remote from the operative suite, shall be inspected and tested on a regular schedule. Such procedures shall determine that adequate ventilation is maintained under supervision.

E.7 Sample of Regulations for Flammable Anesthetizing Locations.

REGULATIONS FOR SAFE PRACTICE IN

FLAMMABLE ANESTHETIZING LOCATIONS

The following rules and regulations have been adopted by the medical staff and by the administration. Annex E, Flammable Anesthetizing Locations, of NFPA 99-2005 shall apply in all inhalation anesthetizing locations.

_____

(Insert Date) (Insert Name of Hospital Authority)

By reason of their chemical compositions, the following flammable anesthetic agents present a hazard of explosion in anesthetizing locations:

Cyclopropane	Ethyl chloride
Ethyl ether	Ethylene

E.7.1 Flammable Anesthetizing Location.

E.7.1.1 Definition. The term flammable anesthetizing location shall mean any area of the hospital designated for the use of flammable anesthetizing agents.

E.7.2 Equipment. No electrical equipment except that judged by the Engineering Department of _____ Hospital as being in compliance with Annex E, Flammable Anesthetizing Locations, of NFPA 99-2005 shall be used in any flammable anesthetizing location.

When a physician wishes to use his or her personal electrical equipment, it shall first be inspected by the Engineering Department and, if judged to comply with Annex E, Flammable Anesthetizing Locations, of NFPA 99-2005, it shall be so labeled.

Portable X-ray equipment used in flammable anesthetizing locations shall be approved for use in hazardous areas.

Only approved photographic lighting equipment shall be used in flammable anesthetizing locations. Because of occasional bursting of bulbs, suitable enclosures shall be used to prevent sparks and hot particles from falling into the hazardous area.

Covers shall not be used on anesthesia machines designed for flammable anesthetic agents.

E.7.3 Personnel. Outer garments worn by the operating room personnel and visitors shall not include fabrics of silk, wool, or synthetic textile materials such as nylon, polyester, acrylic, or acetate unless such fabrics have been tested and found to be antistatic in accordance with the requirements of Annex E, Flammable Anesthetizing Locations, of NFPA 99-2005.

Silk, wool, or synthetic textile materials, except untreated rayon, shall not be permitted in anesthetizing locations as outer garments, or for nonapparel purposes, unless such fabrics have been tested and found to be antistatic in accordance with the requirements of Annex E, Flammable Anesthetizing Locations, of NFPA 99-2005. Hosiery and underclothing in which the entire garment is in close contact with the skin shall be permitted to be of silk, wool, or synthetic material.

All personnel and visitors entering flammable anesthetizing locations shall wear conductive footwear or other floor-contacting devices, that shall have been tested on the wearer and found to be satisfactorily conductive.

It shall be the responsibility of each individual entering a flammable anesthetizing location to determine at least once daily that he is in electrical contact with the conductive floor. Apparatus for testing shall be available.

Copyright National Fire Protection Association
Provided by IHS under license with NFPA
No reproduction or networking permitted without license from IHS
Not for Resale

Moving of patients from one area to another while a flammable anesthetic is being administered shall be prohibited.

Smoking shall be limited to dressing rooms and lounges with the doors leading to the corridor closed.

E.7.4 Practice. Flammable anesthetic agents shall be employed only in flammable anesthetizing locations.

Woolen and synthetic blankets shall not be permitted in flammable anesthetizing locations.

Electrical connection of the patient to the conductive floor shall be ensured by a high-impedance (conductive) strap in contact with the patient's skin with one end of the strap fastened to the metal frame of an operating table or shall be electrically interconnected by other means.

If cautery, electrosurgery, or electrical equipment employing an open spark is to be used during an operation, flammable anesthetics shall not be used. Flammable germicides or flammable fat solvents shall not be applied for the preoperative preparation of the field.

A visual (lighted red lamp) or audible warning signal from the line isolation monitor serving an anesthetizing location indicates that the total hazard current has exceeded allowable limits. This suggests that one or more electrical devices is contributing an excessively low impedance to ground, which might constitute a fault that would expose the patient or hospital personnel to an unsafe condition should an additional fault occur. Briefly and sequentially unplugging the power cord of each electrical device in the location will usually cause the green signal lamp to light, showing that the system has been adequately isolated from ground, when the potentially defective device has been unplugged. The continuing use of such a device, so identified, should be questioned, but not necessarily abandoned. At the earliest opportunity the device should be inspected by the hospital engineer or other qualified personnel and, if necessary, repaired or replaced.

E.7.5 Enforcement. It shall be the responsibility of _____ (name)

(an anesthesiologist or other qualified person appointed by the hospital authority to act in that capacity) to enforce the above regulations.

E.8 Sample of Regulations for Mixed Facilities.

REGULATIONS FOR SAFE PRACTICE IN MIXED FACILITIES

The following rules and regulations have been adopted by the medical staff and by the administration. NFPA 99-2005, Annex E, Flammable Anesthetizing Locations, shall apply in all inhalation anesthetizing locations. This hospital is a mixed facility. Personnel are cautioned as to the existence of both flammable and nonflammable inhalation anesthetizing locations within the hospital building and the different practices that apply to each location.

_____

(Insert Date) (Insert Name of Hospital Authority)

By reason of their chemical compositions, the following flammable anesthetic agents present a hazard of explosion in anesthetizing locations:

Cyclopropane	Ethyl chloride
Ethyl ether	Ethylene

E.8.1 Mixed Facility.

E.8.1.1 Definitions. The term *mixed facility* shall mean a hospital wherein flammable anesthetizing locations and nonflammable anesthetizing locations coexist within the same building, allowing interchange of personnel and equipment between flammable and nonflammable anesthetizing locations.

Flammable anesthetizing location shall mean any area of the hospital designated for the administration of flammable anesthetic agents.

Nonflammable anesthetizing location shall mean any anesthetizing location permanently designated for the exclusive use of nonflammable anesthetizing agents.

E.8.2 Equipment. No electrical equipment except that judged by the Engineering Department of _____ Hospital as being in compliance with NFPA 99-2005, Annex E, Flammable Anesthetizing Locations, shall be used in any flammable anesthetizing location.

When a physician wishes to use his or her personal electrical equipment, it shall first be inspected by the Engineering Department and, if judged to comply with NFPA 99-2005, Annex E, Flammable Anesthetizing Locations, it shall be so labeled.

Portable X-ray equipment used in flammable anesthetizing locations shall be approved for use in hazardous areas.

Only approved photographic lighting equipment shall be used in flammable anesthetizing locations. Because of occasional bursting of bulbs, suitable enclosures shall be used to prevent sparks and hot particles from falling into the hazardous area.

Covers shall not be used on anesthesia machines designed for flammable anesthetic agents.

All portable electrical equipment shall meet the requirements for flammable anesthetizing locations.

E.8.3 Personnel. Outer garments worn by the operating room personnel and visitors in mixed facilities shall not include fabrics of silk, wool, or synthetic textile materials such as nylon, polyester, acrylic, or acetate, unless such fabrics have been tested and found to be antistatic in accordance with the requirements of NFPA 99-2005, Annex E, Flammable Anesthetizing Locations.

Silk, wool, or synthetic textile materials, except untreated rayon, shall not be permitted in mixed facilities as outer garments, or for nonapparel purposes, unless such fabrics have been tested and found to be antistatic in accordance with the requirements of NFPA 99-2005, Annex E, Flammable Anesthetizing Locations. Hosiery and underclothing in which the entire garment is in close contact with the skin shall be permitted to be made of silk, wool, or synthetic material.

All personnel and visitors entering all anesthetizing locations in mixed facilities shall wear conductive footwear or other floor-contacting devices that shall have been tested on the wearer and found to be satisfactorily conductive.

It will be the responsibility of each individual entering an anesthetizing location of a mixed facility to determine at least once daily that he is in electrical contact with the conductive floor. Apparatus for testing shall be available.

Moving of patients from one area to another while a flammable anesthetic is being administered shall be prohibited.

Smoking shall be limited to dressing rooms and lounges with the doors leading to the corridor closed.

Copyright National Fire Protection Association
Provided by IHS under license with NFPA
No reproduction or networking permitted without license from IHS
Not for Resale

E.8.4 Practice. Flammable anesthetic agents shall be employed only in flammable anesthetizing locations.

The administration or the intended administration of a flammable anesthetic agent shall be brought to the attention of all personnel within the flammable anesthetizing location by verbal communication by the anesthesiologist and by posting prominent signs in the operating room and at all entrances to the operating room stating that a flammable anesthetic agent is in use.

Woolen and synthetic blankets shall not be permitted in anesthetizing locations.

Electrical connection of the patient to the conductive floor in a flammable anesthetizing location shall be assured by a high-impedance conductive strap in contact with the patient's skin with one end of the strap fastened to the metal frame of an operating table or shall be electrically interconnected by other means.

If cautery, electrosurgery, or electrical equipment employing an open spark is to be used during an operation, flammable anesthetics shall not be used. Flammable germicides and flammable fat solvents shall not be applied for the preoperative preparation of the field.

If, in the combined judgment of the anesthesiologist responsible for the administration of the anesthetic and the surgeon performing the operation, the life of the patient would be jeopardized by not administering a flammable anesthetic agent in a nonflammable anesthetizing location, the following steps shall be taken:

(1) Both surgeon and anesthesiologist involved in the case shall attest to the reason for administering a flammable anesthetic in a nonflammable anesthetizing location on the patient's record and in the operating room register.
(2) The hazard of static sparks shall be reduced by electrically connecting the patient, operating room table, anesthesia gas machine, and anesthesiologist by wet sheets or other conductive materials. Conductive accessories shall be used for the electrically conductive pathways from the anesthesia gas machine to the patient.

A visual (lighted red lamp) or audible warning signal from the line isolation monitor serving an anesthetizing location indicates that the total hazard current has exceeded allowable limits. This suggests that one or more electrical device is contributing an excessively low impedance to ground, which might constitute a fault that would expose the patient or hospital personnel to an unsafe condition should an additional fault occur. Briefly and sequentially unplugging the power cord of each electrical device in the location will usually cause the green signal lamp to light, showing that the system has been adequately isolated from ground, when the potentially defective device has been unplugged. The continuing use of such a device, so identified, should be questioned, but not necessarily abandoned. At the earliest opportunity the device should be inspected by the hospital engineer or other qualified personnel and, if necessary, repaired or replaced.

Interchange of personnel and portable equipment between flammable and nonflammable anesthetizing locations shall be strictly controlled.

Transportation of patients while an inhalation anesthetic is being administered by means of a mobile anesthesia machine shall be prohibited, unless deemed essential for the benefit of the patient in the combined judgment of the surgeon and anesthetist.

E.8.5 Enforcement. It shall be the responsibility of _____ (name)

(an anesthesiologist or other qualified person appointed by the hospital authority to act in that capacity) to enforce the above regulations.

Annex F Sample Ordinance Adopting NFPA 99

This annex is not a part of the requirements of this NFPA document but is included for informational purposes only.

F.1 The following sample ordinance is provided to assist a jurisdiction in the adoption of this code and is not part of this code.

ORDINANCE NO. _____

An ordinance of the *[jurisdiction]* adopting the *[year]* edition of NFPA *[document number]*, *[complete document title]*, and documents listed in Chapter 2 of that *[code, standard]*; prescribing regulations governing conditions hazardous to life and property from fire or explosion; providing for the issuance of permits and collection of fees; repealing Ordinance No. _____ of the *[jurisdiction]* and all other ordinances and parts of ordinances in conflict therewith; providing a penalty; providing a severability clause; and providing for publication; and providing an effective date.

BE IT ORDAINED BY THE *[governing body]* OF THE *[jurisdiction]*:

SECTION 1 That the *[complete document title]* and documents adopted by Chapter 2, three (3) copies of which are on file and are open to inspection by the public in the office of the *[jurisdiction's keeper of records]* of the *[jurisdiction]*, are hereby adopted and incorporated into this ordinance as fully as if set out at length herein, and from the date on which this ordinance shall take effect, the provisions thereof shall be controlling within the limits of the *[jurisdiction]*. The same are hereby adopted as the *[code, standard]* of the *[jurisdiction]* for the purpose of prescribing regulations governing conditions hazardous to life and property from fire or explosion and providing for issuance of permits and collection of fees.

SECTION 2 Any person who shall violate any provision of this code or standard hereby adopted or fail to comply therewith; or who shall violate or fail to comply with any order made thereunder; or who shall build in violation of any detailed statement of specifications or plans submitted and approved thereunder; or fail to operate in accordance with any certificate or permit issued thereunder; and from which no appeal has been taken; or who shall fail to comply with such an order as affirmed or modified by a court of competent jurisdiction, within the time fixed herein, shall severally for each and every such violation and noncompliance, respectively, be guilty of a misdemeanor, punishable by a fine of not less than $ _____ nor more than $_____ or by imprisonment for not less than _____ days nor more than _____ days or by both such fine and imprisonment. The imposition of one penalty for any violation shall not excuse the violation or permit it to continue; and all such persons shall be required to correct or remedy such violations or defects within a reasonable time; and when not otherwise specified the application of the above penalty shall not be held to prevent the enforced removal of prohibited conditions. Each day that prohibited conditions are maintained shall constitute a separate offense.

SECTION 3 Additions, insertions, and changes — that the *[year]* edition of NFPA *[document number]*, *[complete document title]* is amended and changed in the following respects:

Copyright National Fire Protection Association
Provided by IHS under license with NFPA
No reproduction or networking permitted without license from IHS
Not for Resale

List Amendments

SECTION 4 That ordinance No. _____ of *[jurisdiction]* entitled *[fill in the title of the ordinance or ordinances in effect at the present time]* and all other ordinances or parts of ordinances in conflict herewith are hereby repealed.

SECTION 5 That if any section, subsection, sentence, clause, or phrase of this ordinance is, for any reason, held to be invalid or unconstitutional, such decision shall not affect the validity or constitutionality of the remaining portions of this ordinance. The *[governing body]* hereby declares that it would have passed this ordinance, and each section, subsection, clause, or phrase hereof, irrespective of the fact that any one or more sections, subsections, sentences, clauses, and phrases be declared unconstitutional.

SECTION 6 That the *[jurisdiction's keeper of records]* is hereby ordered and directed to cause this ordinance to be published. [NOTE: An additional provision may be required to direct the number of times the ordinance is to be published and to specify that it is to be in a newspaper in general circulation. Posting may also be required.]

SECTION 7 That this ordinance and the rules, regulations, provisions, requirements, orders, and matters established and adopted hereby shall take effect and be in full force and effect *[time period]* from and after the date of its final passage and adoption.

Annex G Informational References

G.1 Referenced Publications. The following documents or portions thereof are referenced within this standard for informational purposes only and are thus not part of the requirements of this document unless also listed in Chapter 2.

G.1.1 NFPA Publications. National Fire Protection Association, 1 Batterymarch Park, Quincy, MA 02169-7471.

NFPA 10, *Standard for Portable Fire Extinguishers*, 2002 edition.

NFPA 30, *Flammable and Combustible Liquids Code*, 2003 edition.

NFPA 45, *Standard on Fire Protection for Laboratories Using Chemicals*, 2004 edition.

NFPA 49, *Hazardous Chemicals Data*, 1994 edition. (No longer in print; appears in NFPA *Fire Protection Guide to Hazardous Materials,* 13th edition, 2002.)

NFPA 50, *Standard for Bulk Oxygen Systems at Consumer Sites*, 2001 edition.

NFPA 53, *Recommended Practice on Materials, Equipment, and Systems Used in Oxygen-Enriched Atmospheres*, 2004 edition.

NFPA 54, *National Fuel Gas Code*, 2002 edition.

NFPA 70, *National Electrical Code®*, 2002 edition.

NFPA 80, *Standard for Fire Doors and Fire Windows*, 1999 edition.

NFPA 90A, *Standard for the Installation of Air-Conditioning and Ventilating Systems*, 2002 edition.

NFPA 90B, *Standard for the Installation of Warm Air Heating and Air-Conditioning Systems*, 2002 edition.

NFPA 99B, *Standard for Hypobaric Facilities*, 2002 edition.

NFPA *101®*, *Life Safety Code®*, 2003 edition.

NFPA 220, *Standard on Types of Building Construction*, 1999 edition.

NFPA 259, *Standard Test Method for Potential Heat of Building Materials*, 2003 edition.

NFPA 325, *Guide to Fire Hazard Properties of Flammable Liquids, Gases, and Volatile Solids*, 1994 edition. (No longer in print; appears in NFPA *Fire Protection Guide to Hazardous Materials,* 13th edition, 2002.)

NFPA 473, *Standard for Competencies for EMS Personnel Responding to Hazardous Materials Incidents*, 2002 edition.

NFPA 491, *Guide to Hazardous Chemical Reactions*, 1997 edition.

NFPA 701, *Standard Methods of Fire Tests for Flame Propagation of Textiles and Films*, 2004 edition.

NFPA 704, *Standard System for the Identification of the Hazards of Materials for Emergency Response*, 2001 edition.

NFPA 780, *Standard for the Installation of Lightning Protection Systems*, 2004 edition.

NFPA 801, *Standard for Fire Protection for Facilities Handling Radioactive Materials*, 2003 edition.

NFPA 1561, *Standard on Emergency Services Incident Management System*, 2002 edition.

NFPA 1600, *Standard on Disaster/Emergency Management and Business Continuity Programs*, 2004 edition.

NFPA *Fire Protection Guide to Hazardous Materials*, 2001 edition.

NFPA *Fire Protection Handbook*, 19th edition, 2003.

Introduction to Employee Fire and Life Safety: Developing a Preparedness Plan, 2001 edition (for evacuation of all types of occupancies).

G.1.2 Other Publications. The following publications are available from the addresses listed.

G.1.2.1 AATCC Publication. American Association of Textile Chemists and Colorists, P.O. Box 886, Durham, NC 27701.

AATCC Test Method 76-1995, *Electrical Resistivity of Fabrics*, included in 1962 Technical Manual (ANSI/AATCC 76).

G.1.2.2 ASHRAE Publications. American Society of Heating, Refrigerating and Air Conditioning Engineers, Inc., 1791 Tullie Circle, NE, Atlanta, GA 30329.

ASHRAE Guide and Data Book (Annual).

ASHRAE Handbook of Fundamentals, 2001.

ASHRAE Handbook — HVAC Applications, 1982.

ASHRAE Handbook — HVAC Applications, 1983.

ASHRAE Handbook on HVAC Systems and Equipment, 1996 (Chap. 10, Steam Systems, 1996).

ASHRAE *Handbook — HVAC Applications*, 1999 (Chap. 7, Health Care Facilities, 1995).

ASHRAE Standard 52, *Method of Testing Air Cleaning Devices Used in General Ventilation for Removing Particulate Matter*, 1976.

G.1.2.3 ASME Publications. American Society of Mechanical Engineers, Three Park Avenue, New York, NY 10016–5990.

ASME B16.22, *Wrought Copper and Copper Alloy Solder Joint Pressure Fitting*, 2001.

ASME B16.50, *Wrought Copper and Copper Alloy Braze Joint Pressure Fitting*, 2001.

ASME *Boiler and Pressure Vessel Code*, Section IX, Welding and Brazing Qualifications, 1998.

G.1.2.4 ASTM Publications. American Society for Testing and Materials, 100 Barr Harbor Drive, West Conshohocken, PA 19428.

ASTM D 5, *Standard Test Method for Penetration of Bituminous Materials*, 1997.

ASTM D 56, *Standard Test Method for Flash Point by Tag Closed Tester* (ANSI), 1998.

Copyright National Fire Protection Association
Provided by IHS under license with NFPA
No reproduction or networking permitted without license from IHS
Not for Resale

ASTM D 92, *Standard Test Method for Flash and Fire Points by Cleveland Open Cup Tester*, 2002.

ASTM D 93, *Standard Test Methods for Flash Point by Pensky-Martens Closed Cup Tester* (ANSI), 1999.

ASTM D 2240, *Standard Test Method for Rubber Property — Durometer Hardness*, 1997.

ASTM D 2863, *Standard Test Method for Measuring the Minimum Oxygen Concentration to Support Candle-Like Combustion of Plastics*, 2000.

ASTM E 136, *Standard Test Method for Behavior of Materials in a Vertical Tube Furnace at 750°C*, 2004.

ASTM F 1288, *Standard Guide for Planning for and Responding to a Multiple Casualty Incident*, 1990. (Committee F 30, 1990)

ASTM G 63, *Standard Guide for Evaluating Nonmetallic Materials for Oxygen Service*, 1998.

ASTM G 88, *Standard Guide for Designing Systems for Oxygen Service*, 1990.

ASTM G 93, *Standard Practice for Cleaning Methods and Cleanliness Levels for Material and Equipment Used in Oxygen-Enriched Environments*, 1996.

ASTM G 94, *Standard Guide for Evaluating Metals for Oxygen Service*, 1992.

G.1.2.5 CGA Publications. Compressed Gas Association, Inc., 4221 Walney Road, 5th Floor, Chantilly, VA 20151–2923.

CGA E-10, *Maintenance of Medical Gas and Vacuum Systems in Health Care Facilities*, 2001.

CGA G-8.1, *Standard for Nitrous Oxide Systems at Consumer Sites*, 1990.

CGA P-1, *Safe Handling of Compressed Gases in Containers*, 1991.

CGA P-2, *Characteristics and Safe Handling of Medical Gases*, 1996.

CGA V-1, *Standard for Compressed Gas Cylinder Valve Outlet and Inlet Connections* (ANSI B57.1), 1994.

CGA V-5, *Diameter-Index Safety System (Noninterchangeable Low Pressure Connections for Medical Gas Applications)*, 2000.

G.1.2.6 JCAHO Publication. Joint Commission on the Accreditation of Healthcare Organizations, One Renaissance Blvd., Oakbrook Terrace, IL 60181.

Comprehensive Accreditation Manual for Hospitals.

Environment of Care, Emergency Management Standards Guide to Emergency Management Planning in Health Care.

G.1.2.7 Ocean Systems, Inc., Research and Development Laboratory, Tarrytown, NY 10591. Work carried out under U.S. Office of Contract No. N00014-67-A-0214-0013.

Ocean Systems, Inc., "Technical Memorandum UCRI-721, Chamber Fire Safety." (Figure A.3.3.14.3 is adapted from Figure 4, "Technical Memorandum UCRI-721, Chamber Fire Safety," T. C. Schmidt, V. A. Dorr, and R. W. Hamilton, Jr., Ocean Systems, Inc., Research and Development Laboratory, Tarrytown, NY 10591. Work carried out under US Office of Naval Research, Washington, DC, Contract No. N00014-67-A-0214-0013.) (G. A. Cook, R. E. Meierer, and B. M. Shields, "Screening of Flame-Resistant Materials and Comparison of Helium with Nitrogen for Use in Dividing Atmospheres." First summary report under ONR Contract No. 0014-66-C-0149. Tonawanda, NY: Union Carbide, 31 March 1967. DDC No. Ad-651583.)

G.1.2.8 UNECE Publications. UN Economic Commission for Europe, Information Service, Palais des Nations, CH-1211 Geneva 10, Switzerland.

UN *Recommendations on the Transport of Dangerous Goods, Model Regulations*, 11th, rev. ed.

Manual of Tests and Criteria, 3rd rev. ed.

G.1.2.9 U.S. Government Publications. U.S. Government Printing Office, Washington, DC 20402.

Biological Threat Interrogatories, http://www.va.gov/emshg/page.cfm?ID=BioThreatInterr.

Title 29, Code of Federal Regulations, Part 1910, Subpart 1030, *Bloodborne Pathogens.*

Title 29, Code of Federal Regulations, Part 910, Subpart 1910, *Occupational Exposures to Chemical Laboratories.*

Title 49, Code of Federal Regulations, Parts 171 through 190 (U.S. Dept. of Transportation, Specifications for Transportation of Explosives & Dangerous Articles). (In Canada, the regulations of the Board of Transport Commissioners, Union Station, Ottawa, Canada, apply.)

Title 49, Code of Federal Regulations, Part 173, *Shippers — General Requirements for Shipments and Packagings.*

Commercial Standard 223-59, *Casters, Wheels, and Glides for Hospital Equipment.*

Environmental Protection Agency, Chemical Emergency Preparedness and Prevention, http://yosemite.epa.gov/oswer/ceppoweb.nsf/content/homelandSecurity.htm?OpenDocument.

National Research Council Publication 1132, *Diesel Engines for Use with Generators to Supply Emergency and Short Term Electric Power.* (Also available as Order No. O.P.52870 from University Microfilms, P.O. Box 1366, Ann Arbor, MI 48106.)

U.S. Department of Defense:

U.S. Army Medical Research Institute of Chemical Defense (USAMRICD), http://chemdef.apgea.army.mil/.

U.S. Army Medical Research Institute of Infectious Diseases (USAMRIID), http://www.usamriid.army.mil/general/index.html.

U.S. Army Soldier and Biological Chemical Command (SBCCOM), http://hld.sbccom.army.mil/ip/detectors.

U.S. Department of Health and Human Services:

Centers for Disease Control and Prevention: HHS Publication No. 93–8395, *Biosafety in Microbiological and Biomedical Laboratories.*

Centers for Disease Control and Prevention, Public Health Preparedness and Response for Bioterrorism Program, http://www.bt.cdc.gov/planning/continuationguidance/index.asp.

Health Resources and Services Administration, Hospital Bioterrorism Preparedness Program, www.hrsa.gov/bioterrorism.

National Institute for Occupational Health and Safety, Personal Protection Equipment, http://www.cdc.gov/niosh/topics/emres/ppe.html.

Protecting Building Environments from Airborne Chemical, Biologic and Radiologic Agents (page 9). http://www.cdc.gov/mmwr/PDF/wk/mm5135.pdf.

U.S. Department of Homeland Security:

Capability Assessment for Readiness, http://www.fema.gov/pdf/rrr/car.pdf.

Exercise Design Course, http://training.fema.gov/emiweb/IS/is120.asp.

Federal Response Plan/National Response Plan/National Incident Management System, www.fema.gov/rnr/frp.

Guide for All-Hazard Emergency Operations Planning, http://www.fema.gov/pdf/rrr/slg101.pdf.

Metropolitan Medical Response System, Resources, http://mmrs.hhs.gov/main/Resources.aspx.

Copyright National Fire Protection Association
Provided by IHS under license with NFPA
No reproduction or networking permitted without license from IHS
Not for Resale

National Disaster Medical System, Conference Library, http://ndms.dhhs.gov/NDMS%20Conference/conf2k3/previous_confe_03/previous_confe_03.html.

Strategic National Stockpile, http://www.bt.cdc.gov/stockpile/index.asp.

U.S. Department of Justice, Office of Domestic Preparedness, Publications Library, http://www.ojp.usdoj.gov/odp/library/bulletins.htm.

U.S. Department of Labor, Occupational Health and Safety Administration, Washington, DC:

Title 29, Code of Federal Regulations, Part 1910:

Employee Protection Plans, 1910.38

Hazardous Materials

Subpart H – *Hazardous Materials* (1910.101-126), specifically 1910.120 – *Hazardous Waste Operations and Emergency Response* (HAZWOPER) and Appendices A-E.

Subpart I – *Personal Protective Equipment* (1910.132-139 and Appendix B), specifically:

1910.132, *General Provisions*

1910.133, *Eye and Face Protection*

1910.134, *Respiratory Protection* (and appendices A-D)

1910.136, *Occupational Foot Protection*

1910.138, *Hand Protection*

Subpart Z - *Toxic and Hazardous Substances* (1910.1000-1450 and Appendix B), specifically 1910.1200 – *Hazard Communication* (and Appendices A-E).

Publication 3114, *Hazardous Waste Operations and Emergency Response*, http://www.osha.gov/Publications/OSHA3114/osha3114.html.

Publication 3152, *Hospitals and Community Emergency Response – What You Need to Know*, http://www.osha.gov/Publications/OSHA3152/osha3152.html.

U.S. Department of Veterans Affairs, Veterans Health Administration, http://www.va.gov/emshg/emp/emp.htm, *Emergency Management Program Guidebook*, Health Care Facility.

G.1.2.10 U.S. Pharmacopeia Publication. U.S. Pharmacopeia, 12601 Twinbrook Parkway, Rockville, MD 20852.

USP *Standard for Compressed Air*, Document No. XXII/NFXVII.

G.1.2.11 Other Publications.

DuPont Safety News, June 14, 1965.

Dasler and Bauer, Ind. Eng. Chem. Anal., Ed. 18, 52 (1964).

Hoeltge, G. A., Miller, A., Klein, B. R., Hamlin, W. B., *Accidental fires in clinical laboratories.*

Merriam-Webster's Collegiate Dictionary, 11th edition, Merriam-Webster, Inc., Springfield, MA, 2003.

G.2 Informational References. The following documents or portions thereof are listed here as informational resources only. They are not a part of the requirements of this document.

G.2.1 Published Articles on Fire Involving Respiratory Therapy Equipment, and Related Incidents.

Benson, D. M., and Wecht, C. H. Conflagration in an ambulance oxygen system. *Journal of Trauma*, vol. 15, no. 6:536-649, 1975.

Dillon, J. J. Cry fire! *Respiratory Care*, vol. 21, no. 11:1139-1140, 1976.

Gjerde, G. E., and Kraemer, R. An oxygen therapy fire. *Respiratory Care*, vol. 25, no. 3 3:362-363, 1980.

Walter, C. W. Fire in an oxygen-powered respirator. *JAMA* 197:44-46, 1960.

Webre, D. E., Leon, R., and Larson, N.W. Case History; Fire in a nebulizer. *Anesthesia and Analgesia* 52:843-848, 1973.

G.2.2 References for A.10.2.13.4.3.

Dalziel, C. F., and Lee, W. R., Reevaluation of lethal, electric currents effects of electricity on man. *Transactions on Industry and General Applications*, vol. IGA-4, no. 5, September/October 1968.

Roy, O. A., Park, G. R., and Scott, J. R., Intracardiac catheter fibrillation thresholds as a function of duration of 60 Hz current and electrode area. *IEEE Trans. Biomed. Eng.* BME 24:430-435, 1977.

Roy, O. A., and Scott, J. R., 60 Hz ventricular fibrillation and pump failure thresholds versus electrode area. *IEEE Trans. Biomed. Eng.* BME 23:45-48, 1976.

Watson, A. B., Wright, J. S., and Loughman, J., Electrical thresholds for ventricular fibrillation in man. *Med. J. Australia* 1:1179-1181, 1973.

Weinberg, D. I., et al., Electric shock hazards in cardiac catheterization. *Elec. Eng.* 82:30-35, 1963.

G.2.3 Addresses of Other Organizations that Publish Standards or Guidelines.

American Conference of Governmental and Industrial Hygienists, P.O. Box 1937, Cincinnati, OH 45201.

American Industrial Hygiene Assoc., 475 Wolf Ledges Parkway, Akron, OH 44311.

College of American Pathologists, 325 Waukegan Road, Northfield, IL 60003.

George Washington University, School of Engineering and Applied Sciences, Institute for Crisis, Disaster and Risk Management. *Medical and Health Incident Management (maHim) System: A Comprehensive Functional System Description for Mass Casually Medical and Health Incident Management*, http://www.seas.gwu.edu/~icdm/MaHIM%20V2%20final%20report%20sec%202.pdf.

National Emergency Management Association, Council of State Governments, Lexington, KY, Emergency Management Assistance Compact, http://www.emacweb.org/emac/index.cfm?CFID=5327&CFTOKEN=28115803.

Scientific Apparatus Makers Assoc., 1101 16th Street, NW, Washington, DC 20036.

University of Colorado, Natural Hazards and Information Applications Center, Disaster Research Clearinghouse, www.colorado.edu/hazards.

University of Delaware, Disaster Research Center, http://www.udel.edu/DRC/.

G.2.4 Addresses of Organizations and Agencies that Provide Health Care Emergency Preparedness Educational Materials.

G.2.4.1 Publications.

National Fire Protection Association, 1 Batterymarch Park, Quincy, MA 02169-7471.

American Health Care Association, 1201 L Street, Washington, DC 20005.

American Hospital Association, 840 North Lake Shore Drive, Chicago, IL 60611.

American Medical Association, 515 N. State Street, Chicago, IL 60610.

American Red Cross, National Headquarters, 2025 E Street, NW, Washington, DC 20006.

Copyright National Fire Protection Association
Provided by IHS under license with NFPA
No reproduction or networking permitted without license from IHS
Not for Resale

American Nurses' Association, 8515 Georgia Avenue, Suite 400, Silver Spring, MD 20910.

American Red Cross:

Family Disaster Planning http://www.redcross.org/services/disaster/beprepared/familyplan.html Disaster Preparedness for People with Disabilities http://www.redcross.org/services/disaster/beprepared/disability.html

Association of American Railroads, 50 F Street, Washington, DC 20001-1564.

Charles C. Thomas Publisher, 2600 South First Street, Springfield, IL 62704.

Dun-Donnelley Publishing Corp., 666 Fifth Avenue, New York, NY 10019.

Federal Emergency Management Agency, 500 C Street, SW, Washington, DC 20472.

Florida Health Care Association, 307 W. Park Avenue, P.O. Box 1459, Tallahassee, FL 32301.

Helicopter Association International, 1635 Prince Street, Alexandria, VA 22314-2818.

Hospital Emergency Incident Command System, State of California Emergency Medical Services Authority, 1930 9th Street, Sacramento, CA 95814. http://www.emsa.ca.gov/dms2/heics3.htm

International Association of Fire Chiefs, 4025 Fair Ridge Drive, Suite 300, Fairfax, VA 22033-2868.

Joint Commission on Accreditation of Healthcare Organizations (JCAHO), One Renaissance Blvd., Oakbrook Terrace, IL 60181.

National Interagency Incident Management System, Incident Command System, National Interagency Fire Coordination Center, Boise, ID. http://www.nwcg.gov/pms/forms/ics_cours/ics_courses.htm

Pan American Health Organization, 525 23rd Street, NW, Washington, DC 20037 (Attn.: Editor, Disaster Preparedness in the Americas).

Standardized Emergency Management System, State of California Governor's Office of Emergency Services, 3650 Schreiber Avenue, Mather, CA 95655. http://www.oes.ca.gov/Operational/OESHome.nsf/Content/B4943535210895448825 6C2A0071E038?OpenDocument

University of Delaware, Disaster Research Center (Publications), Newark, DE 19716.

U.S. Department of Transportation (available from U.S. Government Printing Office, Washington, DC 20402).

G.2.4.2 Audio-Visual Materials. Many of the web links listed in G.2.4.1 contain PowerPoint presentations and/or streaming video.

National Fire Protection Association, 1 Batterymarch Park, Quincy, MA 02169-7471.

Abbott Laboratories, Audio/Visual Services, 565 Fifth Avenue, New York, NY 10017.

Brose Productions, Inc., 10850 Riverside Drive, N. Hollywood, CA 91602.

Federal Emergency Management Agency, Office of Public Affairs, Washington, DC 20472.

Fire Prevention Through Films, Inc., P.O. Box 11, Newton Highlands, MA 02161.

General Services Administration, National Audiovisual Center, Reference Section, Washington, DC 20409.

Helicopter Association International, 1635 Prince Street, Alexandria, VA 22314-2818.

Pyramid, P.O. Box 1048, Santa Monica, CA 90406.

University of Illinois Medical Center, Circle Campus, Chicago, IL 60612.

G.3 References for Extracts. The following documents are listed here to provide reference information, including title and edition, for extracts given throughout the nonmandatory sections of this standard as indicated by a reference in brackets [ ] following a section or paragraph. These documents are not a part of the requirements of this document unless also listed in Chapter 2 for other reasons.

NFPA 30, *Flammable and Combustible Liquids Code*, 2003 edition.

NFPA 45, *Standard on Fire Protection for Laboratories Using Chemicals*, 2004 edition.

NFPA 70, *National Electrical Code®*, 2002 edition.

NFPA 99B, *Standard for Hypobaric Facilities*, 2002 edition.

NFPA *101®*, *Life Safety Code®*, 2003 edition.

NFPA 1670, *Standard on Operations and Training for Technical Search and Rescue Incidents*, 2004 edition.

Copyright National Fire Protection Association
Provided by IHS under license with NFPA
No reproduction or networking permitted without license from IHS
Not for Resale

Index

© 2005 National Fire Protection Association. All Rights Reserved.

The copyright in this index is separate and distinct from the copyright in the document that it indexes. The licensing provisions set forth for the document are not applicable to this index. This index may not be reproduced in whole or in part by any means without the express written permission of NFPA.

-A-

Absolute atmosphere (definition) 3.3.14.2
Absolute pressure (definition) 3.3.148.1
ACFM (actual cubic feet per minute)(definition) 3.3.1
Active electrode .....*see* Electrode, active
Adapters ..... 8.4.1.2.5, 8.5.2.1.7, A.8.4.1.2.5(2)
Adiabatic heating C.20.1.2.4.1, C.20.1.3.4.4
  Definition 3.3.2
Aerosols 9.6.1.2.1, 13.4.1.2.2.3, A.13.4.1.2.2.3, C.13.1.3.2
  Definition 3.3.3
Aftercoolers 5.1.3.5.5, 5.1.3.5.11.3, 5.1.3.5.11.8
Air
  Compressors .....*see also* Compressed air system (Level 3); Medical air compressors
    Compressed air starting devices 4.4.1.1.14
    Hyperbaric chambers 20.2.4.2
  Medical .....*see* Medical air
  Monitoring, hyperbaric chamber 20.2.8.6, A.20.2.8.6
  Recirculation of 6.3
Air conditioners, anesthetizing locations 6.4.1.5, E.3.4, E.3.5
Air supply, closing off C.13.4.3
Alarm systems
  Annunciator, remote 4.4.1.1.17
  Area ..... 5.1.9, 5.1.12.3.5.3, 5.1.14.8.3, A.5.1.9, C.5.1.3, C.5.2.9 to C.5.2.13, C.5.2.15, C.5.2.16
    Definition 3.3.4.1
  Changeover signals 5.1.9.2.4, C.5.1.3, C.5.2.10, C.5.2.13
  Essential electrical systems ..... 4.4.2.2.2.2(3), 4.5.2.2.2(3)
  Generator sets 4.4.1.1.16.1
  Hyperbaric chambers 20.2.5.1.4, 20.2.5.4, 20.2.7.3.16, A.20.2.5.1.4, A.20.2.5.4.2, A.20.2.7.3.16.1
  Labeling 5.1.11.4
  Laboratories 11.5.2
  Level 1 ..... 5.1.3.4.8, 5.1.9, A.5.1.9, C.5.1.3, C.5.2.9 to C.5.2.13, C.5.2.15, C.5.2.16; *see also subheads:* Area, Master
    Instrument air 5.1.3.8.10
    Labeling 5.1.11.4
    Maintenance 9.8.8
    Medical air compressors 5.1.3.5.10, 5.1.3.5.14, A.5.1.3.5.10
    Medical–surgical vacuum system 5.1.3.6.4, 5.1.3.6.8
    Support gases 5.1.14.8
    Tests 5.1.12.3.5
    Waste anesthetic gas disposal (WAGD) 5.1.3.7.4
  Level 2 ..... 5.2.9
  Level 3 ..... 5.3.9
    Definition 3.3.4.2
    Tests 5.3.12.3.4, 5.3.13.7.5
  Local 5.1.3.4.8, 5.1.3.5.10, 5.1.3.5.14, 5.1.3.6.4, 5.1.9.1, 5.1.9.5, 5.1.14.8.3, A.5.1.3.5.10, A.5.1.9.5
    Definition 3.3.4.3
  Master ..... 5.1.9, 5.1.12.3.5.2, 5.1.14.8.2, A.5.1.9, C.5.1.3, C.5.2.9 to C.5.2.13, C.5.2.15, C.5.2.16
    Computer systems as substitutes for 5.1.9.4
    Definition 3.3.4.4
  Medical air compressors 5.1.3.5.14, A.5.1.3.5.10
  Medical–surgical vacuum system 5.1.3.6.8
  Remote control 4.4.1.1.17
  Silencing means 4.4.1.1.17.2, 4.4.1.1.17.3
Alternate power sources ..... 4.4.1.1.4 to 4.4.1.1.6, 4.6.3.1.1; *see also* Generator sets
  Connection to 4.4.2.2.3.2
  Definition 3.3.5
  Maintenance and testing of ..... 4.4.4.1.1, 4.5.4.1.1, 4.6.4.1.1, A.4.4.4.1.1.2(A)
  Transfer to .....*see* Transfer switches
Ambient atmosphere (definition) 3.3.14.1
Ambient pressure (definition) 3.3.148.2
Ambulatory health care centers ...*see also* Other health care facilities
  Definition 3.3.6
  High-frequency electricity, use of D.1.2
Ampacity (definition) 3.3.7
Analgesia, relative (definition) 3.3.158
Anesthetic apparatus 9.5.1, A.9.5.1.1, A.9.5.1.2, A.9.5.1.4
  Contamination C.13.2.5.2.1
  Selection of C.13.2.2
  Testing 9.5.1.3
Anesthetics .....*see also* Inhalation anesthetics, use of; *specific gases*
  Definition 3.3.8
  Flammable 5.1.13.1.1, 5.3.13.5.1, C.13.1.3.1
  Waste ..... 6.4.1.6; *see also* Waste anesthetic gas disposal (WAGD) systems
Anesthetizing locations ..... 13.4.1, A.13.4.1; *see also* Hospitals; Inhalation anesthetics
  Definition 3.3.9, A.3.3.9
  Designation of 13.2.5
  Electrical equipment ..... 8.4.1.2.4, 10.2.7.3, A.8.4.1.2.4.2, C.13.4.4.1 to C.13.4.4.3, E.8.2
  Electrical receptacles 13.4.1.2.6.3
  Electrical safeguards 13.4.1.2.4, A.13.4.1.2.4
  Electrical systems 13.4.1.2.6
  Electric connections and testing 13.4.1.2.5
  Electrostatic hazards C.13.1.3.3.2, C.13.1.3.3.3
  Emergency procedures C.13.2, C.13.4
  Extinguishment or containment of fires C.13.4.4
  Fire and explosion hazard B.6.1, C.13.4
  Fire prevention 13.4.1.2.10
  Flammable .....*see* Flammable anesthetizing locations
  Gases .... 13.4.1.2.7; *see also* Waste anesthetic gas disposal (WAGD) systems
  Germicides 13.4.1.2.2, A.13.4.1.2.2.3
  Hazards 13.4.1.1.3, 13.4.1.2.10.1, A.13.4.1.1.3
    Nature of C.13.1
    Related, and safeguards C.13.2
  Humidification 6.4.1.1, A.6.4.1.1
  Mixed facilities .....*see* Mixed facilities
  Other health care facilities 14.4.1
  Rules and regulations 13.4.1.1.4, A.13.4.1.1.4.2, C.13.1.5.3, C.13.3, C.14.2, E.6.6.9.3
  Safety 13.4.1.1.3, A.13.4.1.1.3, B.6.3
  Signs and posters C.13.3
  Sources of ignition C.13.1.3.3
  Switches 13.4.1.2.6
  Temperature 6.4.1.5, A.20.2.4.3.2, E.3.5.4
  Ventilation 6.4.1, 6.6.1, A.6.4.1.1
  Wiring 4.3.2.2.5.1, 14.3.4.2.1.1
Animal chambers ..... 20.1.5.2(3), 20.2.2.3, A.20.1.5.2
Anoxia (definition) 3.3.10
Antistatic
  Accessories E.6.6.8.6, E.6.6.10.7, E.6.6.10.8
  Definition E.1.1

Copyright National Fire Protection Association
Provided by IHS under license with NFPA
No reproduction or networking permitted without license from IHS
Not for Resale

Apparatus ..... *see* Anesthetic apparatus; Equipment
Appliances ..... *see also* Electrical equipment; Equipment
Battery-powered 10.2.10.1, 10.2.10.2, 20.2.7.3.17.5
Definition 3.3.11
Double-insulated 8.4.1.2.1.2, E.4.5.2.2
Definition 3.3.36, A.3.3.36
Housekeeping/maintenance, facility-owned ..... 8.4.2.2.1, 8.5.2.1.2.2 Ex. 2
Mechanical stability 10.2.1.2
With power-cords 10.2.2, A.10.2.2
Programmable, de-energization of 10.2.6.5.3
Rechargeable 10.2.10.2
Wiring within 10.2.3, A.10.2.3.2, A.10.2.3.6
Application of standard 1.3
Applicator (definition) 3.3.12, A.3.3.12
Approved (definition) 3.2.1, A.3.2.1
Area of administration (definition) 3.3.13
Arrhythmia (definition) C.9.2.1
Asphyxia (definition) C.9.2.2
Aspiration (definition) C.9.2.3
Atmosphere
Absolute (definition) 3.3.14.2
Ambient (definition) 3.3.14.1
Chamber (definition) 3.3.14.4
Definition 3.3.14, A.3.3.14
Of increased burning rate (definition) ..... 3.3.14.3, A.3.3.14.3, Fig. A.3.3.14.3
Oxygen-enriched ..... *see* Oxygen-enriched atmosphere
Attachment plugs ..... *see* Plugs (attachment plugs, caps)
Authority having jurisdiction
Definition 3.2.2, A.3.2.2
Emergency planning responsibilities 12.2.1, 12.3.1, 12.3.2, A.12.2.1, A.12.3.1, A.12.3.2
Automatic (definition) 3.3.15
Automatic monitoring devices 11.2.1.1.3, A.11.2.1.1.3

-B-

Batteries 4.4.1.2
Cranking 4.4.1.1.13
Maintenance 4.4.4.1.3, 4.5.4.1.3, 4.6.4.1.3
Performance criteria and testing 4.6.3.3
Type 3 systems 4.6.1.2, 4.6.3.3
Battery-powered appliances ..... *see* Appliances, battery-powered
Battery systems, fire extinguishing 20.2.5.4.3
Bends (definition) ..... 3.3.16, A.3.3.16; *see also* Decompression sickness
Bilge, hyperbaric facilities 20.2.2.4.3
Biological safety cabinets 6.4.3.1, A.6.4.3.1
Birthing centers ..... Chap. 21
Booties ..... *see* Footwear, conductive
Branch circuits
Definition 3.3.17
Patient care areas 4.3.2.2.1.1, A.4.3.2.2.1.1
Branch (lateral) lines, piping
Definition 3.3.145.1
Takeoffs 5.1.10.10.6, 5.3.10.10.9
Brazing 5.1.10.5, 5.1.10.10.12, 5.3.10.10.1.3, 5.3.10.10.15, A.5.10.5.5
Breathing apparatus
Hyperbaric chambers 20.2.4.1.3, 20.2.4.5.3, A.20.2.4.5.3
Self-contained breathing apparatus (SCBA), laboratory use A.11.5
Bronchi (definition) C.9.2.4
Bulk systems ..... 5.1.3.5.1(1), A.5.1.3.3
Cryogenic liquids 5.1.3.4.13, 5.1.9.2.4, 9.8.2, 9.8.3, A.5.1.3.4.13, C.5.2.4, C.5.2.13
Definition 3.3.19
Nitrous oxide (definition) 3.3.19.1
Oxygen (definition) 3.3.19.2
Burns
Direct current D.3.7
From electrosurgery
Operator burns D.7.5.2
Patient burns D.7.5.1
Heated surfaces and B.5.3.1
High-frequency B.5.3.2, C.13.1.2.1, D.3.3
Human tissue, burning of B.5.3, C.20.1.1.3.3
Nonionizing radiation D.3.8
Bypass-isolation switch ..... *see* Isolation switch, bypass

-C-

Cannula, nasal (definition) 3.3.114
Carbon dioxide
Designation colors/operating pressures ..... Table 5.1.11
Monitoring 20.2.8.5
Poisoning C.20.1.3.3.1
Supply systems 5.1.3.3.1.8, 5.1.3.4.2, A.5.1.3.4.2
Cardiac defibrillators ..... *see* Defibrillators
Cardiac electrode 10.2.12.1, A.10.2.12.1.2
Cardiac monitors 10.2.11, A.10.2.11
Cart-mounted equipment 10.2.3.8
Carts, for cylinders 9.5.3.1
Casters 9.5.2.1, 20.3.6.2.2.2, 20.3.6.2.2.3
Catheters
Angiographic 10.2.12.3, A.10.2.12.3
Cardiac ..... 10.2.12.2.1 to 10.2.12.2.3, A.10.2.12.2.1
Liquid-filled 10.2.12.2, A.10.2.12.2.1
Nasal (definition) 3.3.117
Central supply system, Level 1
Components ..... 5.1.3.4, A.5.1.3.4, C.5.2.1 to C.5.2.4
Headers 5.1.3.4.9, A.5.1.3.4.9
Identification and labeling 5.1.3.1, A.5.1.3.1.1
Locations 5.1.3.3, A.5.1.3.3
Maintenance and record keeping 9.8.4
Operations 5.1.3.2
Reserves
Bulk cryogenic liquid systems 5.1.3.4.13.6
In-building emergency reserves 5.1.3.4.15
Warning signals 5.1.9.2.4, C.5.1.4, C.5.1.5, C.5.2.11, C.5.2.12, C.5.2.13
Central supply system, Level 2 ..... 5.2.3.1 to 5.2.3.4
Chamber atmosphere (definition) 3.3.14.4
Chassis
Leakage current 8.4.1.3.4, 8.4.1.3.5, A.8.4.1.3.5.1
Leakage limits 10.2.13.4.3, A.10.2.13.4.3
Resistance 10.2.13.2
Chemicals ..... *see also* Hazardous chemicals
Ordering 11.2.1.1.4
Spills, emergency procedures ..... 11.2.1.3.3, 13.4.1.2.10.3(B)
Chloroform C.13.1.3.1.2
Circuit breakers 4.4.4.1.2.1, A.4.4.4.1.2.1
Circuits
Branch ..... *see* Branch circuits
Maintenance and testing of 4.4.4.1.2, 4.5.4.1.2, 4.6.4.1.2, A.4.4.4.1.2.1
Patient-connected 10.2.1.1
Restoration of ..... 4.4.1.1.1.2(2)
Cleaning
Decontamination C.13.2.5
Hyperbaric facilities 20.3.6.4, A.20.3.6.4
Mechanical cleansing C.13.2.5.1
Routine, reusable items C.13.2.5
Sterilization C.13.2.5.1
Clinics ..... *see* Other health care facilities
Clothing
Antistatic E.6.6.8.8.1
Fires/ignition of 11.2.1.3.4, A.11.2.1.3.4, C.20.1.1.3.4
Flammable anesthetizing locations ..... C.13.1.5.2, E.6.6.10.4 to E.6.6.10.6, E.8.3
In hyperbaric chambers 20.3.1.5.5.1
Coagulation ..... *see* Electrocoagulation
Code (definition) 3.2.3, A.3.2.3

Copyright National Fire Protection Association
Provided by IHS under license with NFPA
No reproduction or networking permitted without license from IHS
Not for Resale

Cold room (definition) ..... 3.3.20; *see also* Refrigerating equipment
Combustibility
Human tissues C.20.1.1.3.3
Plastics C.13.2.4.1.1
Combustible (definition) 3.3.21
Combustible liquids .....*see* Flammable and combustible liquids
Combustible materials .....*see also* Fire hazard
Fabrics C.20.1.1.3.4
Near patients who are to receive respiratory therapy B.6.1.9
Oxygen-enriched atmospheres B.6.1.7, B.6.1.8
Combustion (definition) 3.3.23, A.3.3.23
Combustion products
Definition 3.3.24
Toxicity B.4.2
Communication systems .....*see also* Alarm systems
Anesthetizing locations E.6.6.6
Circuits, mechanical protection of 4.4.2.2.4.6
Emergency systems ..... 4.4.2.2.2, 4.5.2.2.2(4), A.4.4.2.2.2.2(4), A.4.4.2.2.2.3, A.4.5.2.2.2(4)
Hyperbaric facilities 20.2.8, A.20.2.8.2, A.20.2.8.6, A.20.2.8.7
Compressed air starting devices 4.4.1.1.14
Compressed air system (Level 3) ... 5.3.3.3.2.2, 5.3.3.3.7, 5.3.3.5.3; *see also* Instrument air; Medical air compressors
Definition 3.3.93, A.3.3.93
Conductive (definition) E.1.2
Conductive accessories 20.3.6.2.3, A.20.3.6.2.3, C.13.1.5.1, E.6.6.8.3, E.6.6.8.4, E.6.6.13
Disposable and nondistensible C.13.2.4.1
Conductive flooring
Anesthetizing locations C.13.1.4.1.1, E.6.6.1.3, E.6.6.8.2, E.6.6.10, E.6.6.12, E.6.7.3, E.8.3
Hyperbaric facilities 20.3.6.2.1, A.20.3.6.2.1
Conductive footwear .....*see* Footwear, conductive
Conductive surfaces, exposed .....*see* Exposed conductive surfaces
Conductors
Isolated ungrounded systems 4.3.2.6.4
Isolation of neutral 4.4.2.1.4.14, A.4.4.2.1.4.14
Connections, valves for future 5.1.4.10
Connectors, flexible 5.1.10.10.7, 5.3.3.4.3, 5.3.10.10.11
Construction
Central supply systems and storage, gas 5.1.3.3.2, A.5.1.3.3.2
Hyperbaric facilities 20.2, A.20.2
Laboratories 11.3.1, 11.5.1, A.11.3.1, A.11.5.1
Containers .....*see also* Cylinders
Connections 5.3.13.2, 9.7.3, A.9.7.3.1
Definition 3.3.25
Flammable and combustible liquids 11.7.2.1, A.11.7.2.1
Handling 5.1.3.2.2, 9.5.2.3, B.6.3
Labeling ... 5.1.3.1.1 to 5.1.3.1.7, 5.3.3.1.1 to 5.3.3.1.4, A.5.1.3.1.1
Management 11.10.1
Safety mechanisms 9.7.4
Source 9.3
Storage 5.3.13.4, 9.4, 9.6.2, 9.7.5, 11.10.2, A.11.10.2.6
Controls, electrical equipment ..... 8.5.2.1.6, 20.2.8.1.3(1), E.4.3
Cooling, essential electrical system generator sets 4.4.1.1.12
Cords .....*see* Power cords
Cover plates ..... 4.4.2.2.4.2(B), 4.5.2.2.4.2, A.4.4.2.2.4.2(B), A.4.5.2.2.4.2
CPAP (continuous positive airway pressure)(definition) C.9.2.5
CPR (cardiopulmonary resuscitation)(definition) C.9.2.6
Cranking batteries .....*see* Batteries, cranking
Critical branch 4.3.2.2.1.2, 4.4.1.1.3, 4.4.2.2.1.1, 4.4.2.2.2.3, 20.2.5.4.3, 20.2.7.2.2, A.4.4.2.2.2.3
Definition 3.3.26
Critical care areas .... 13.2.4(2), 14.3.4.2.2; *see also* Patient care areas
Definition 3.3.138.1, A.3.3.138.1
Electrical appliances, testing of 8.5.2.1.2.2
Electrical installation 4.3.2.2.1.2
Generator load shed circuits 4.4.1.1.3
Critical equipment (definition) 3.3.28
Critical system 4.5.2.2.3, A.4.5.2.2.3.4
Definition 3.3.29
Cross-connection test 5.1.12.2.4, 5.1.12.3.3, 5.3.12.2.5, 5.3.12.3.3, 5.3.12.4.4, B.2.3.2
Croup tent (definition) C.9.2.7
Cryogenic liquids ..... 5.1.3.2.9, 5.1.3.2.10, 5.1.3.3.1.1, 5.1.3.3.1.2(3), 5.1.3.4(3)
Bulk systems 5.1.3.4.13, 5.1.9.2.4, 9.8.2, 9.8.3, A.5.1.3.4.13, C.5.2.4, C.5.2.13
Manifolds, cylinder ... 5.1.3.4.12, Fig. A.5.1.3.4.12, C.5.2.2, C.5.2.3
Cutting .....*see* Electrocutting
Cyanosis (definition) C.9.2.8
Cylinders
Connections ..... 5.3.3.4.1, 5.3.13.2, 9.3.3 to 9.3.5, 9.3.10, 9.3.11, 9.7.3, A.9.7.3.1
Definition 3.3.30
Handling ..... 5.1.3.2.2, 5.1.3.2.7, 5.1.3.2.8, 5.1.3.2.10 to 5.3.2.12, 5.1.3.3.1.7, 5.3.3.2.7 to 5.3.3.2.11, 9.5.2.3, 9.7, A.9.7.3.1, B.2.1, B.2.3.2, B.6.1.14, B.6.3, C.13.1.2.3.1
Headers 5.1.3.4.9, A.5.1.3.4.9
Labeling ..... 5.1.3.1.1 to 5.1.3.1.7, 5.3.3.1.1 to 5.3.3.1.4
Management 5.3.3.2, 5.3.3.3.1, 5.3.13.1, 5.3.13.2, 5.3.13.4, 9.7, 11.10.1, A.5.3.3.2, A.9.7.3.1
Manifolds for .....*see* Manifolds
Regulators ..... 9.3.6 to 9.3.8
Reserves 5.1.9.2.4, 5.3.3.5.8, A.5.3.3.5.8, C.5.1.4, C.5.1.5, C.5.2.11, C.5.2.12, C.5.2.13
Safety mechanisms 9.7.4
Source 9.3
Storage ..... 5.1.3.2.3 to 5.1.3.2.7, 5.1.3.2.10 to 5.3.2.1.13, 5.1.3.3.1.7, 5.1.3.3.4, 5.3.3.2.2 to 5.3.3.2.12, 5.3.3.3.1, 5.3.13.4, 9.4, 9.6.2, 9.7.5, 11.10, A.11.10.2.6
Supply systems ..... 5.1.3.5.1(1), 5.3.3.4.4, 5.3.3.4.5, A.5.3.3.4.4
Gas supply, shutting off 5.3.13.5.4
Transfilling 9.6.2.2
Typical medical gas cylinders volume and weight of contents ..... Table C.13.5

-D-

Decompression sickness C.20.1.3.2, C.20.1.3.4
Definition 3.3.31
Decontamination C.13.2.5
Defatting agents D.3.5.5
Defibrillate (definition) C.9.2.9
Defibrillators ..... 8.5.2.4.6, 10.2.9.2.2.6, A.8.5.2.4.6, A.10.2.9.2.2.6, B.2.1, B.6.1.14(4)
Definitions ..... Chap. 3, C.9.2, E.1
Delayed-automatic connection, equipment for 4.4.2.2.3.4, 4.4.2.2.3.5, 4.5.2.2.3.3, 4.5.2.2.3.4, A.4.4.2.2.3.4, A.4.4.2.2.3.5, A.4.5.2.2.3.4
Delivery rooms, ventilation E.3.5.2
Deluge systems 20.2.5.2, A.20.2.5.2.4, A.20.2.5.2.6
Dental office .....*see* Medical/dental office
Desiccation D.6.3
Detonation (definition) 3.3.32
Diathermy
Dielectric or spaced-plate D.2.1.4.2
Equipment, radiation D.2.2.5.2
Hazards D.3.3.2
Inductive D.2.1.4.3
Microwave D.2.1.5
Radio-frequency D.2.1.4, D.3.3.2
Ultrasonic D.2.1.6
Dielectric or spaced-plate diathermy D.2.1.4.2
Diffusion (definition) C.9.2.10
Direct-current burns D.3.7
Direct electrical pathway to heart
Definition 3.3.33, A.3.3.33
Manufacturers' requirements 10.2.12, A.10.2.12
Protection of patients 8.5.2.1.5
Disasters .....*see also* Emergency management
Bomb threats C.12.3.8
Causes A.3.3.34

Copyright National Fire Protection Association
Provided by IHS under license with NFPA
No reproduction or networking permitted without license from IHS
Not for Resale

Civil disturbance C.12.3.7
Definition 3.3.34, A.3.3.34
Fire/explosion C.12.3.1
Hazardous materials C.12.3.10
Radioactive contamination C.12.3.9
Storm, severe C.12.3.2
Volcanic eruptions C.12.3.11
Weapons of mass destruction C.12.3.12
Disinfecting agents 13.4.1.2.2, A.13.4.1.2.2.3
Dispersive cable monitoring circuits D.3.3.1.4
Dispersive electrode D.3.3.1.1
Definition 3.3.38.3, A.3.3.38.3
Low-frequency shocks D.3.4
Disposable supplies C.13.2.4
D.I.S.S. connector (definition) 3.3.35
Distinctive receptacles 10.2.4.2, A.10.2.4.2
Documentation
Electrical equipment, records of 8.5.3, A.8.5.3.1.2
Gas systems, records of ..... 5.3.13.7, 9.8, A.9.8.7(3), A.9.8.9
Maintenance logs .....*see* Maintenance logs
Of tests 4.3.4.2, 4.4.4.2, 4.5.4.2, 4.6.4.2, 8.5.3.1.2, A.4.3.4.2.1, A.8.5.3.1.2
Vacuum systems, records of ..... 5.3.13.7, 9.8, A.9.8.7(3), A.9.8.9
Double-insulated appliances 8.4.1.2.1.2, E.4.5.2.2
Definition 3.3.36, A.3.3.36
Drains, Level 3 vacuum source 5.3.3.6.3, A.5.3.3.6.3
Drills
Emergency preparedness 12.3.3.10, A.12.3.3.10
Fire exit ..... 11.2.1.4.3, 13.4.1.2.10.4(C), A.11.2.1.4.3
Fire training 20.3.1.4.5, A.20.3.1.4.5
Ducts, flammable anesthetizing locations E.3.3

-E-

EKG, ECG (definition) C.9.2.11
Electrical attachment plugs .....*see* Plugs (attachment plugs, caps)
Electrical currents .....*see* Electrical systems
Electrical energy-delivering appliances 8.5.2.1.8, 10.2.9.2, A.8.5.2.1.8, A.10.2.9.2.1, A.10.2.9.2.2
Safety requirements 10.2.9.2.1, A.10.2.9.2.1
Electrical equipment ..... Chap. 8
Administration 8.5, A.8.5
Anesthetizing locations 8.4.1.2.4, 9.6.1.3.2, 13.4.1.2.4, A.8.4.1.2.4.2, A.13.4.1.2.4, C.13.1.2.1.2, E.4, E.8.2
Birthing centers 21.3.8
Chemical agents in 10.2.6.3, A.10.2.6.3
Connectors and connections to 10.2.4, A.10.2.4.2
Controls 8.5.2.1.6
Cord- and plug-connected (portable) ..... 8.4.1.2, 8.4.2.2, 10.2.13.4.3.1, 20.2.7.3.17.6, A.8.4.1.2.4.2, A.8.4.1.2.5(2), A.8.4.2.2.2
Design and manufacturing requirements 10.2.6, A.10.2.6.3
Electrical energy-delivering 8.5.2.1.8, 10.2.9.2, A.8.5.2.1.8, A.10.2.9.2.1, A.10.2.9.2.2
Essential electrical systems 4.4.2.2.3, A.4.4.2.2.3.4, A.4.4.2.2.3.5
Hazards of 8.2, 10.2.7, A.10.2.7.2, B.2.1
Home care 19.3.8
Hospitals 13.3.8, A.13.3.8.1, A.13.3.8.2
Housekeeping/maintenance, facility-owned ..... 8.4.2.2.1, 8.5.2.1.2.2 Ex. 2
Hyperbaric facilities 20.2.8.1, 20.2.8.2, A.20.2.8.2
Laboratory 8.5.2.5, 13.3.8.2, A.8.5.2.5.1, A.8.5.2.5.2, A.13.3.8.2
Life support 14.3.4.2.1
Definition 3.3.37
Limited care facilities 18.3.8
Line voltage variations and transients 10.2.5, A.10.2.5
Low voltage 10.2.10
Maintenance 8.5.2.2
Manuals for 8.5.2.1.10, 8.5.2.2.1, 8.5.3.1.1, 10.2.8, 10.2.8.1, A.8.5.2.1.10
Manufacturers' requirements for 10.2, A.10.2
Moisture and B.5.2.2
Nonpatient 8.4.2, A.8.4.2.2.2
Not supplied by facility 8.5.2.1.13
Nursing homes 17.3.8
Operating instructions 10.2.8.2
Other health care facilities 14.3.8
Oxygen-enriched atmospheres 10.2.9.3
Patient-care-related appliances 8.4.1, 10.2, A.8.4.1, A.10.2
Definition 3.3.139
Of patients B.6.1.14
Performance criteria 8.4, A.8.4
Permanently connected (fixed) 8.4.1.1, 10.2.13.4.3.2, E.6.6.3
Procurement of ..... 8.5.2.1.9 to 8.5.2.1.12, A.8.5.2.1.9(5), A.8.5.2.1.10
Qualification and training of personnel 8.5.5, A.8.5.5.1
Recordkeeping 8.5.3, A.8.5.3.1.2
Respiratory therapy 8.5.2.4, 9.6.1.3.2, A.8.5.2.4.1, A.8.5.2.4.5, A.8.5.2.4.6, B.6.1.14
Signal transmission between 10.2.9.1, A.10.2.9.1.1
Special appliances, requirements 10.2.9, A.10.2.9
Surgical use 8.5.2.3
System demonstration 8.5.2.1.11
Testing 8.4.1.3, 8.5.2.1.2, A.8.4.1.3
Thermal standards 10.2.6.1
Toxicity of surfaces of 10.2.6.2
Wiring within 10.2.3, A.10.2.3.2, A.10.2.3.6
Electrical fires and explosions 4.2.1, A.4.2.1, B.1.1, B.5.1
Electrical hazards ..... 4.2, 8.2, A.4.2.1, B.1, B.5; *see also* Electrical safeguards
Electrically powered transducers 10.2.9.2.2.1, A.10.2.9.2.2.1
Electrical receptacles 4.3.2.2.6, A.4.3.2.2.6.1
Anesthetizing locations 8.4.1.2.4.2, 13.4.1.2.6.3, A.8.4.1.2.4.2, E.2.4, E.4.5.2.4, E.4.5.2.5
Distinctive 10.2.4.2, A.10.2.4.2
Emergency systems ..... 4.4.2.2.4.2, 4.5.2.2.4.2, 4.6.2.2.3.2, A.4.4.2.2.4.2(B), A.4.5.2.2.4.2
Grounding of 4.3.2.2.2.4, B.1.2.2.3.2
Hyperbaric chambers 20.2.7.3.10, A.20.2.7.3.10
Indexing of 10.2.4.1
Laboratories 4.3.2.3
Number of 4.3.2.2.6.2
Overhead ..... 8.4.1.2.4.3, A.8.4.1.2.4.3(2)
Polarity of 4.3.2.2.6.3
Special purpose outlets, branch circuits serving 4.3.2.2.1.3
Testing 4.3.3.2
Electrical safeguards
Anesthetizing locations 13.4.1.2.4, A.13.4.1.2.4
Hyperbaric facilities 20.3.5
Shock hazard 8.2.2
Electrical systems .... Chap. 4; *see also* Electrical systems, patient care areas; Essential electrical systems; High-frequency electricity, use of
Abnormal currents ..... 4.4.1.1.1.2(1), 4.4.1.1.2
Administration of 4.3.4, A.4.3.4
Anesthetizing locations ..... 13.4.1.2.6, E.2, E.6.6.2 to E.6.6.6
Birthing centers 21.3.4
Design considerations ..... 4.4.1.1.1, A.4.4.1.1.1, A.4.4.1.1.1.2(5)
Equipment 4.4.2.2.3, A.4.4.2.2.3.4, A.4.4.2.2.3.5
Hazards 4.2, A.4.2.1, B.1, B.5
Hospitals 13.3.4
Hyperbaric facilities 20.2.8, A.20.2.8.2, A.20.2.8.6, A.20.2.8.7
Interruption of power B.1.4
Limited care facilities 18.3.4
Maintenance 4.3.4.1
Medical air systems 5.1.3.5.12
Medical–surgical vacuum supply systems 5.1.3.6.6
Nursing homes 17.3.4
Other health care facilities 14.3.4
Patient care areas .....*see* Electrical systems, patient care areas
Requirements 4.3, A.4.3
Distribution 4.3.2, A.4.3.2
Installation 4.3.2.1
Performance criteria 4.3.3, A.4.3.3
Testing 4.3.3, A.4.3.3

--`,,```,,,,````-`-`,,`,,`,`,,`---

Copyright National Fire Protection Association
Provided by IHS under license with NFPA
No reproduction or networking permitted without license from IHS
Not for Resale

Sources of power 4.3.1, 4.4.1, 4.5.1, 4.6.1, A.4.4.1
Alternate .....*see* Alternate power sources
Failure of ..... 4.4.3.2.2, 4.4.3.2.3, 4.4.3.2.6 to 4.4.3.2.8, 4.5.3.2.2, 4.6.3.2.3
Instrument air supply systems 5.1.3.8.11
Performance criteria and testing 4.4.3.1, 4.5.3.1, 4.6.3.1
Transfer to .....*see* Transfer switches
Testing 4.3.4.1
Waste anesthetic gas disposal (WAGD) systems 5.1.3.7.5
Wet locations 4.3.2.2.8, A.4.3.2.2.8.1
Electrical systems, patient care areas
Connectors and connections to devices 10.2.4, A.10.2.4.2
Direct electrical pathway to the heart 10.2.12, A.10.2.12
Distribution 4.3.2.2, A.4.3.2.2
Electrical appliances, manufacturers' requirements 10.2, A.10.2
Electrical energy appliances 10.2.9.2, A.10.2.9.2.1, A.10.2.9.2.2
Electrical shock hazard control 4.3.2.2.8.1, A.4.3.2.2.8.1
Equipment racks and carts 10.2.3.8
Grounding system 4.3.3.1, A.4.3.3.1.1, A.4.3.3.1.3, A.4.3.3.1.4
Hazards, nature of 10.2.7, A.10.2.7.2
Manuals for appliances 8.5.2.1.10, 8.5.2.2.1, 8.5.3.1.1, 10.2.8, A.8.5.2.1.10
Procurement of appliances ..... 8.5.2.1.9 to 8.5.2.1.12, A.8.5.2.1.9(5), A.8.5.2.1.10
Receptacles 4.3.2.2.6, A.4.3.2.2.6.1
Safety requirements 10.2.9.2.1, 10.2.13, A.10.2.9.2.1, A.10.2.13
Switches 13.4.1.2.6
Testing 10.2.13, A.10.2.13
Wet locations 4.3.2.2.8, A.4.3.2.2.8.1
Wiring 4.3.2.2.5, 13.3.4.1
Within appliances 10.2.3, A.10.2.3.2, A.10.2.3.6
Electrical wiring
Anesthetizing locations 4.3.2.2.5.1, E.2.1, E.2.2, E.4.1
Appliances, with power-cords 10.2.3, A.10.2.3.2, A.10.2.3.6
Essential electrical systems ..... 4.4.2.2.4, 4.5.2.2.4, 4.6.2.2.3, A.4.4.2.2.4.1, A.4.4.2.2.4.2(B), A.4.5.2.2.4.1, A.4.5.2.2.4.2
Hospitals, typical wiring arrangement C.4.1
Hyperbaric facilities ..... 20.2.7.3 to 20.2.7.6
Impedance of isolated wiring 4.3.2.6.2, A.4.3.2.6.2.1
Isolated power systems 4.3.2.2.8.4, 4.3.2.2.9, 4.3.2.6.2, A.4.3.2.6.2.1
Low-voltage 4.3.2.2.5
Patient care areas 4.3.2.2.5
Within appliances 10.2.3, A.10.2.3.2, A.10.2.3.6
Electricity
High-frequency, use of .....*see* High-frequency electricity
Hospital 13.2.3
Electric shock (electrostatic) hazard 4.2.2, 8.2.2, B.1.2, B.2.1, B.5.2
Anesthetizing locations ..... C.13.1.2.1, C.13.1.3.3.2, C.13.1.3.3.3, C.13.1.4.1, E.6.6.8 to E.6.613
Cardiac defibrillation 10.2.9.2.2.6, A.10.2.9.2.2.6
Control of B.1.2.2.2
Electrotherapeutic devices 10.2.9.2.2.4, A.10.2.9.2.2.4
Furniture 20.3.6.2.2, A.20.3.6.2.2.1
Hyperbaric facilities 20.3.6, A.20.3.6, C.20.1.3.2.5
Laboratories, portable equipment for 8.4.2.2.2.1
Low frequency D.3.4
Oxygen-enriched atmospheres B.6.1.14
Prevention ..... B.1.2.2.1 to B.1.2.2.5, B.5.2.1
Safeguards against 8.2.2
Textiles 20.3.1.5.4, A.20.3.1.5.4, E.6.6.8.8
Wet location patient care areas 4.3.2.2.8.1, A.4.3.2.2.8.1
Electrocardiographs 10.2.11, A.10.2.11
Electrocautery equipment ..... 20.3.2.1.2(2), D.2.1.2
Electrocoagulation D.2.1.1.2, D.6.4, D.6.7.3, D.6.8
Electrocutting ..... D.2.1.1.3, D.6.5 to D.6.7
Electrode
Active (definition) 3.3.38.1
Bipolar (definition) 3.3.38.2
Burns from D.3.3.1.1, D.3.3.1.2
Cardiac 10.2.12.1, A.10.2.12.1.2
Definition 3.3.38
Dispersive D.3.3.1.1
Definition 3.3.38.3, A.3.3.38.3
High-frequency equipment D.4.3.3
Inspection D.5.3.3.1
Electromagnetic interference 10.2.6.4
Electromagnetic radiation D.2.2.5
Electrostatic hazard .....*see* Electric shock (electrostatic) hazard
Electrosurgery ..... B.5.3.2, D.1.7; *see also* High-frequency equipment
Care in use D.7
Complications D.3.6
Hazards, nature of C.13.1.3.2.2, D.3.3.1, D.3.5
Low-frequency shocks D.3.4
Operation of electrosurgical unit D.7.4
Operator burns D.7.5.2
Patient burns D.7.5.1
Qualifications for use of D.5.1.3
Radiation D.2.2.5.2
Repair of electrosurgical unit D.7.7
With resectoscope D.7.5
Safety measures 10.2.9.2.2.5, A.10.2.9.2.2.5, D.3.3.1
Setting up electrosurgical unit D.7.3
Special instruments D.3.6.3
Storage of electrosurgical unit D.7.6
Techniques and procedures D.2.1.1
Telescope use D.7.5.3
Tissue, effects on D.3.6.2
Electrosurgical oscillators .....*see* Oscillators, electrosurgical
Electrotherapeutic devices 10.2.9.2.2.4, A.10.2.9.2.2.4
Elevators
Essential electrical systems ..... 4.4.2.2.2.2(6), 4.4.2.2.3.5(3), 4.5.2.2.2(7)
Temporary operation of ..... 4.5.2.2.3.4(B), A.4.5.2.2.3.4(B)
Emergency management ..... Chap. 12, C.12; *see also* Emergency procedures
Activation of plan C.12.3.6
Committee for 12.2.2, 12.2.3, A.12.2.3
Declaration of disaster 12.3.1, 12.3.2, A.12.3.1, A.12.3.2
Definition 3.3.39
Drills 12.3.3.10, A.12.3.3.10
Emergency utility resources, activation of C.12.3.6
Essential building systems, continuation of 12.3.3.2, A.12.3.3.2
Evacuation C.12.3.3
General requirements 12.3, A.12.3
High-profile person admission C.12.3.4
Hospitals 13.3.12
Identification of emergency response personnel 12.3.3.1, A.12.3.3.1
Limited care facilities 18.3.12
Logistics 12.3.3.5, A.12.3.3.5
News media, reception of C.12.3.4.2
Nursing homes 17.3.12
Operational recovery 12.3.3.8, A.12.3.3.8
Other health care facilities 14.3.12
Other protocols C.12.3.5
Patient management 12.3.3.4, A.12.3.3.4
Personnel education 12.3.3.9
Personnel management 12.3.3.3, A.12.3.3.3
Personnel notification and recall C.12.2
Public affairs 12.3.3.7, A.12.3.3.7
Responsibilities 12.2, A.12.2.1, A.12.2.3
Authority having jurisdiction 12.2.1, 12.3.1, 12.3.2, A.12.2.1, A.12.3.1, A.12.3.2
Emergency management committee 12.2.3, A.12.2.3
Senior management 12.2.2
Security 12.3.3.6, A.12.3.3.6, C.12.3.4.1
Volcanic eruption C.12.3.11
Weapons of mass destruction C.12.3.12
Emergency oxygen supply connection 5.1.3.4.14, A.5.1.3.4.14
Definition 3.3.40

--`,,```,,,,````-`,,`,,`,`,,`---

Copyright National Fire Protection Association
Provided by IHS under license with NFPA
No reproduction or networking permitted without license from IHS
Not for Resale

Emergency procedures .... C.12.3.1; *see also* Emergency management
Anesthetizing locations 13.4.1.2.10.3, C.13.2, C.13.4
Chemical spills ..... 11.2.1.3.3, 13.4.1.2.10.3(B)
Hyperbaric facilities ..... 20.3.1.4.3 to 20.3.1.4.6, 20.3.5.1.2, A.20.3.1.4.4.1, A.20.3.1.4.5, A.20.3.1.4.6, C.20.2, C.20.3
Laboratories 11.2.1.3, A.11.2.1.3.4
Respiratory therapy C.9.3
Emergency shower, laboratories 11.6, 11.8.1.3, A.11.6
Emergency systems ..... 4.4.2.2.2, 4.5.2.2.2, A.4.4.2.2.2.2(4), A.4.4.2.2.2.3, A.4.5.2.2.2(4)
Definition 3.3.41
Mechanical protection of 4.4.2.2.4.4
Employees
Anesthetizing locations C.13.1.5.2, C.13.4.5, C.13.4.6, E.6, E.7.3, E.8.3
Emergency response personnel, identification of 12.3.3.1, A.12.3.3.1
Gas equipment cylinders and containers, handling of 9.6.2.1
High-frequency equipment, use of D.5.1.2, D.5.1.3, D.5.2
Hyperbaric chambers 20.3.1.3, 20.3.1.4, 20.3.1.5.3, 20.3.1.5.5, A.20.3.1.3, A.20.3.1.4, A.20.3.1.5.3
Management, in emergency 12.3.3.3, A.12.3.3.3
Medical gas and vacuum system installers 5.1.10.10.11, 5.1.10.10.12, 5.1.12.2, 5.3.10.10.1
Notification and recall, in emergency C.12.2
Respiratory therapy C.9.1.1.1, C.9.1.1.2, C.9.3.5, C.9.3.6
Training .....*see* Training, employee
Enclosures
Gas systems 5.3.3.3.6, 9.4.2.1, 9.5.2.2
Shock prevention by B.1.2.2.2
Endotracheal tube
Definition 3.3.178.1, A.3.3.178.1
Electrosurgery and D.3.5.4
Enflurane C.13.1.3.1.2
Environmental systems ..... Chap. 6
Equipment .....*see also* Electrical equipment
Critical (definition) 3.3.28
Home care, responsibility for 19.2
Hyperbaric 20.2, 20.3.2, A.20.2, A.20.3.2
Laboratory 11.4, 14.3.8.2, 17.3.8.2, 18.3.8.2, A.11.4.2.1, A.11.4.2.2
Portable ..... 8.4.1.2, A.8.4.1.2.4.2, A.8.4.1.2.5(2), E.4.5.1, E.4.5.2, E.4.6.3, E.4.6.5, E.4.6.6
Mixed facilities E.6.7.6
Rack or cart 9.5.3.1, 10.2.3.8
Equipment grounding bus (definition) 3.3.42
Equipment system (definition) 3.3.43
Equivalency to standard 1.4
Essential electrical systems
Definition 3.3.44
Electrical appliances in operation with 10.2.6.5
Maintenance guide for C.4.2
Other health care facilities 14.3.4.2
Sources 4.5.1
Suggested format for listing functions C.4.3
Type 1 ..... 4.4, A.4.4
Administration ..... 4.4.4, A.4.4.4.1.1.2(A), A.4.4.4.1.2.1
Distribution 4.4.2, A.4.4.2
Generator sets ..... 4.4.1.1, 4.4.4.1.1, A.4.4.4.1.1, A.4.4.4.1.1.2(A)
Hospitals 13.3.4.2
Maintenance and testing ..... 4.4.4.1, A.4.4.4.1.1.2(A), A.4.4.4.1.2.1
Performance criteria and testing 4.4.3
Sources 4.4.1, A.4.4.1
Type 2 ..... 4.5, A.4.5.2.2.1 to A.4.5.2.2.4.2
Administration 4.5.4
Distribution ..... 4.5.2, A.4.5.2.2.1 to A.4.5.2.2.4.2
Limited care facilities 18.3.4.2
Maintenance and testing 4.5.4.1
Nursing homes 17.3.4.2
Performance criteria and testing 4.5.3
Sources 4.5.1, 4.5.3.1
Type 3 ..... 4.6, A.4.6.2.2.1, A.4.6.2.2.3.2
Administration 4.6.4
Distribution 4.6.2
Maintenance and testing 4.6.4.1
Performance criteria and testing 4.6.3
Sources 4.6.1, 4.6.3.1
Ether C.13.1.3.3.1, C.13.1.3.3.4, E.5.1, E.5.3
Ethylene C.13.2.5.2
Evacuation, emergency, of facility C.12.3.3
Evacuation, waste gas .....*see* Waste anesthetic gas disposal (WAGD) systems
Exhaust systems .....*see also* Ventilation
Anesthetizing locations 6.4.1.2, 6.4.1.6
Emergency systems ..... 4.4.2.2.3.5(4)
Hyperbaric facilities 20.2.9.2
Laboratory 6.4.2.3, 11.3.3, A.6.4.2.1, A.6.4.2.3
Medical–surgical vacuum source ... 5.1.3.6.7, 5.3.3.6.4, A.5.3.3.6.4.8
Waste anesthetic gas disposal (WAGD) systems 5.1.3.7.6
Exits, laboratories 11.3.2, A.11.3.2.1
Explosion hazard C.12.3.1
Anesthetizing locations B.6.1, C.13.1.3.3.1, C.13.4
Electrical appliances and equipment 4.2.1, 10.2.7, A.4.2.1, A.10.2.7.2, B.1.1, B.5.1
Gas equipment B.6.1
High-frequency electricity D.3.5
Hyperbaric facilities C.20.1.1
Laboratories ..... 8.4.2.2.2.3, Chap. 11
Exposed conductive surfaces
Definition 3.3.46
Grounding 10.2.3.2, 10.2.13.2, A.10.2.3.2
Testing 4.3.3.1.1.2, 4.3.3.1.1.3, 10.2.13.4.1, E.6.6.8.5
Extension cords ... 8.4.1.2.5, 8.5.2.1.7, 13.4.1.2.5.2, A.8.4.1.2.5(2); *see also* Power cords
Extinguishers, portable fire
Anesthetizing locations, use in C.13.4.4.2, C.13.4.4.3
Classification C.13.4.4.3
Hyperbaric facilities 20.2.5.1.5, A.20.2.5.1.5
Laboratories, location 11.5.3
Respiratory therapy equipment, use on C.9.3.4.2
Extinguishing systems .....*see* Fire extinguishing systems

-F-

Fabrics .....*see* Textiles
Failure
Definition 3.3.47, A.3.3.47
Power sources ..... 4.4.3.2.2, 4.4.3.2.3, 4.4.3.2.6 to 4.4.3.2.8, 4.5.3.2.2, 4.6.3.2.3
Fault currents (definition) 3.3.48
Fault hazard current (definition) 3.3.66.1
Feeder (definition) 3.3.49
Filters, air A.5.1.3.5.1
Instrument air 5.1.3.8.7
Medical air 5.1.3.5.8, 5.1.3.5.11.5, 5.1.3.5.11.6, 5.1.3.5.11.9, A.5.1.3.5.11.6
Fire alarm system .....*see* Alarm systems
Fire blankets 20.2.5.1.5, A.20.2.5.1.5
Fire detection systems
Hyperbaric facilities 20.2.5.4, 20.3.6.3, A.20.2.5.4.2
Laboratories 11.5.2
Fire emergency procedures .....*see* Emergency procedures
Fire extinguishing systems .....*see also* Fire protection
Anesthetic locations C.13.4.4
Automatic 11.3.1.1.1, 11.5.1, A.11.5.1
Deluge systems, hyperbaric chambers 20.2.5.2, A.20.2.5.2.4, A.20.2.5.2.6
Hyperbaric chambers 20.2.5, A.20.2.5
Laboratories 11.3.1.1.1, 11.5.1, 11.5.2, A.11.5.1
Respiratory therapy equipment, use on C.9.3.4
Fire hazard .....*see also specific type such as* Electrical hazards
Anesthetizing locations C.13.1.3.3, C.13.4
Electrical appliances 10.2.7, A.10.2.7.2, B.1.1, B.5.1

Copyright National Fire Protection Association
Provided by IHS under license with NFPA
No reproduction or networking permitted without license from IHS
Not for Resale

Gas equipment B.6.1
Gas systems 5.1.2, 5.3.2, B.2.1
High-frequency electricity D.3.5
Hyperbaric facilities C.20.1.1
Laboratories ..... Chap. 11, C.11.1
Oxygen-enriched atmosphere ...*see* Oxygen-enriched atmosphere
Respiratory therapy 9.6.1.1, 9.6.1.2, A.9.6.1.1.2, A.9.6.1.1.3
Fire prevention
Anesthetizing locations 13.4.1.2.10
Hyperbaric facilities 20.3.1.5, A.20.3.1.5
Laboratories 11.2.1, 11.8.1, A.11.2.1.1.3, A.11.2.1.3.4, A.11.2.1.4.3, A.11.8.1
Fire protection
Hyperbaric facilities 20.2.5, 20.2.6, 20.3.6.3, A.20.2.5
Laboratories 11.5, A.11.5
Fires, laboratory, documented C.11.1
Flame resistant (definition) 3.3.50, A.3.3.50
Flammability hazards C.11.2.3.2
Degrees of ..... Table C.11.2.3.2
Flammable (definition) 3.3.51, A.3.3.51, C.11.2.3.2
Flammable agents .....*see* Flammable substances and agents
Flammable and combustible liquids .....*see also* Hazardous materials
Definition 3.3.22, 3.3.53, A.3.3.22, C.11.2.1
Degree of flammability hazard ..... Table C.2.3.2
Handling 11.7.1, 11.7.4
Heating 11.7.4
In hyperbaric chambers ..... 20.3.1.5.2, A.20.3.1.5.2.2(2)
Laboratory procedures, electric heating equipment used for 8.4.2.2.2.3
Storage 11.7.2, A.11.7.2
Transfer of 11.7.3
Use of 9.6.1.2.3, 11.7.1, 11.7.2, A.11.7.2
Working supplies 11.7.2.3, A.11.7.2.3
Flammable anesthetizing locations ..... Annex E
Additional criteria E.6
Definition E.1.3
Electrical equipment E.4
Electrical system criteria ..... E.2, E.6.6.2 to E.6.6.6
Electrostatic hazards ..... E.6.6.8 to E.6.6.13
Gas equipment E.5
Hazardous area in (definition) E.1.4
Hazardous location E.1.5
Isolated power systems E.6.6.2
Labeling E.6.4, E.6.5
Nonconforming materials, discretionary use of E.6.6.11
Rules and regulations C.13.1.5.3, E.6.3, E.7
Signaling and communications systems E.6.6.6
Storage of flammable anesthetics E.6.6.1, E.6.8
Definition E.1.7
Ventilation E.3
Flammable gases ..... 20.3.1.5.2, A.20.3.1.5.2.2(2), Table C.2.3.2; *see also* Cylinders; Flammable anesthetizing locations; Flammable substances and agents; Gases
Definition 3.3.52
Hyperbaric facilities 20.3.3.3
Storage 20.3.3.3, 20.3.4.1.5.1
Flammable liquids .....*see* Flammable and combustible liquids
Flammable substances and agents 7.2.2.1
Hazards related to use of C.13.1.3, C.13.1.4.2
Misuse of 9.6.1.2
Flash point
Definition 3.3.54, C.11.2.2
Liquids ..... C.11.2.2, Table C.2.3.2
Flexible connectors 5.1.10.10.7, 5.3.3.4.3, 5.3.10.10.11
Flexible cord ..... 8.4.1.2, 20.2.7.3.9, A.8.4.1.2.4.2, A.8.4.1.2.5(2), E.4.5.1, E.4.5.2
Flooring
Antistatic 20.2.2.4.2
Conductive .....*see* Conductive flooring
Hyperbaric facilities 20.3.6.2.1
Flow-control valve 9.6.3.3.1
Definition 3.3.55
Flowmeter
Definition 3.3.56
Labels on 9.6.3.1.3
Pressure compensated (definition) 3.3.56.1
Foot switches D.4.2.4
Foot treadle-operated controllers 8.4.1.2.4.1, E.4.5.2.1
Footwear
Conductive E.6.6.8.7, E.6.6.10, E.6.6.13.3, E.8.3
Nails in 20.3.1.5.3.3, E.6.6.8.7.4
Formulas 1.5
Freestanding birthing centers ..... Chap. 21
Definition 3.3.57
Frequency .....*see also* High-frequency electricity, use of; High-frequency equipment; Radio frequency power
Definition 3.3.58, A.3.3.58
Low-frequency electrical shock D.3.4
Fulguration D.2.1.1.2, D.6.2
Fume hoods
Definition 3.3.59, A.3.3.59
Laboratory 6.4.3, 6.6.2, 11.7.4.1, A.6.4.3.1, A.6.4.3.3, A.6.4.3.4, A.6.6.2
Furniture
Electrostatic hazard 20.3.6.2.2, A.20.3.6.2.2.1
Flammable anesthetizing locations ..... C.13.1.5.1, E.6.6.8.9, E.6.6.13.4 to E.6.6.13.6
Hyperbaric facilities 20.3.6.2.2, A.20.3.6.2.2.1
Mixed facilities E.6.7.6

-G-

Gas cylinders .....*see* Cylinders
Gas equipment ..... Chap. 9, C.9
Administration 9.6, A.9.6.1.1.2, A.9.6.1.1.3, A.9.6.3.2
Anesthetizing locations E.5
Birthing centers 21.3.9
Cylinders and containers 9.3, 9.7
Hazards
Fire and explosion B.6.1
Toxicity B.6.2.2
Home care 19.3.9
Hospital 13.3.9
Level 3 gas-powered devices, final testing of 5.3.12.4
Maintenance and record keeping 9.8
Nursing homes 17.3.9
Other health care facilities 14.3.9
Performance criteria and testing 9.5, A.9.5.1.1, A.9.5.1.2, A.9.5.1.4
Policies and procedures 9.9
Qualification and training of personnel 9.6.3.3.5
Safety B.6.3
Source 5.3.12.4.8, 9.3, A.9.3.9
Use 9.6.3, A.9.6.3.2
Gases .....*see also specific gases*
Anesthetizing locations .... 13.4.1.2.7; *see also* Waste anesthetic gas disposal (WAGD) systems
Flammable .....*see* Flammable gases
Handling 20.3.3, A.20.3.3.4
Medical .....*see* Medical gases
Monitoring, hyperbaric chambers ..... 20.2.8.3 to 20.2.8.8, A.20.2.8.6 to A.20.2.8.8
Nonflammable ..... 9.4; *see also* Medical gases
Oxidizing (definition) 3.3.130, A.3.3.130
Transfer of 11.9, C.13.1.2.3.2
Gasket material 20.2.3.1.2
Gas-powered systems 5.3.3.5, 5.3.10.1.2, A.5.3.3.5
Definition 3.3.60
Gas systems .....*see* Medical gas systems
General care areas ..... 13.2.4(1); *see also* Patient care areas
Definition 3.3.138.2, A.3.3.138.2
Electrical appliances, testing of 8.5.2.1.2.2

Copyright National Fire Protection Association
Provided by IHS under license with NFPA
No reproduction or networking permitted without license from IHS
Not for Resale

Generator sets 4.4.1.1, A.4.4.1.1
Alarm annunciator 4.4.1.1.17
Alternate power source 4.5.4.1.1.1, 4.5.4.1.1.2, 4.6.1
Design considerations ..... 4.4.1.1.1, A.4.4.1.1.1, A.4.4.1.1.1.2(5)
Exclusive use for essential electrical systems 4.4.1.1.7.1, A.4.4.1.1.7.3
Fuel supply 4.4.1.1.15
Generator load shed circuits 4.4.1.1.3
Hyperbaric chambers 20.2.7.2.1.2
Maintenance and testing ..... 4.4.4.1.1, A.4.4.4.1.1.2(A)
Performance criteria and testing 4.6.3.2
Safety devices 4.4.1.1.16
Germicides 13.4.1.2.2, A.13.4.1.2.2.3, D.3.5.5
Governing body
Definition 3.3.62
Hospitals 13.2.1
Ground-fault circuit interrupters (GFCIs) ... 4.3.2.2.4.2, A.4.3.2.2.4.2
Definition 3.3.63
Wet locations 4.3.2.2.8.5
Ground-fault protection ... 4.3.2.2.4.1, 4.3.2.5, 20.2.7.4, A.4.3.2.2.4.1
Testing 4.3.3.4
Grounding ..... B.1.2.2.3; *see also* Grounding systems
Appliances 8.4.1.1, 8.4.1.2.1
Attachment plugs, grounding-type ..... 10.2.2.1.1, 10.2.2.1.4 to 10.2.2.1.9, A.10.2.2.1.1
Exposed conductive surfaces 10.2.3.2, 10.2.13.2, A.10.2.3.2
Hyperbaric chambers 20.2.7.4, 20.2.9.1
Patient care areas 4.3.2.2.2, 4.3.2.2.7, 4.3.3.1, A.4.3.2.2.2.2, A.4.3.2.2.7.1, A.4.3.2.2.7.3, A.4.3.3.1.1, A.4.3.3.1.3, A.4.3.3.1.4
Piping system 5.1.13.1.3, 5.3.13.5.2
Quiet grounds .....*see* Quiet grounds
Special 4.3.2.2.7, A.4.3.2.2.7.1, A.4.3.2.2.7.3
Grounding circuit continuity 10.2.13.2
Grounding conductor
Connection to appliance 10.2.3.4, 10.2.3.5
In power cords 10.2.2.2.1.1, 10.2.2.2.2
Grounding interconnects 4.3.2.2.3, A.4.3.2.2.3
Grounding point
Patient equipment (definition) 3.3.141
Reference 4.3.3.1.2
Definition 3.3.156
Grounding systems
Definition 3.3.65, A.3.3.65
Testing 4.3.3.1.1, A.4.3.3.1.1
Guide (definition) 3.2.4

-H-

Halogenated agents 13.3.5.2, 14.3.5.2, C.13.1.3.1.2
Halothane C.13.1.3.1.2
Handlines, water, hyperbaric facilities 20.2.5.3
Hand trucks 9.5.3.1
Hazard current
Definition 3.3.66
Fault (definition) 3.3.66.1
Monitor (definition) 3.3.66.2
Total (definition) 3.3.66.3
Hazardous area in flammable anesthetizing locations (definition) E.1.4
Hazardous chemicals B.2.3.1
Definition 3.3.67, A.3.3.67
In electrical appliances 10.2.6.3, A.10.2.6.3
Identification of ..... 11.8.2.2(3)
Hazardous location (definition) E.1.4
Hazardous materials .....*see also* Hazardous chemicals
Disposal 11.7.5, 11.8.1.4, A.11.7.5, A.11.8.1.4
Emergency preparedness C.12.3.10
Identification of 11.8.2
Storage, hyperbaric facilities 20.3.4.1.5
Hazards .....*see* specific type such as Electrical hazards
Headers
Central supply system 5.1.3.4.9, A.5.1.3.4.9
Instrument air standby 5.1.3.8.5, A.5.1.3.8.5
Health care facilities (definition) 3.3.68, A.3.3.68
Health hazards
Definition C.11.2.3.1
Degrees of ..... Table C.11.2.3.1
Heart, direct electrical pathway to .....*see* Direct electrical pathway to heart
Heating
Adiabatic .....*see* Adiabatic heating
Essential electrical system generator sets 4.4.1.1.12, A.4.4.1.1.12.1
Heating equipment, electrical, in laboratories 8.4.2.2.2.2
Hemoglobin (definition) C.9.2.12
High-energy devices ..... 20.3.2.1.2(3)
High-frequency burns .....*see* Burns
High-frequency electricity, use of ... Annex D; *see also* Electrosurgery; High-frequency equipment
Administration and maintenance D.5
Definition D.1.3
Direct current burns D.3.7
Electromagnetic radiation D.2.2.5
Explosion hazard, internal and external D.3.5
FCC regulations D.4.2.6
Frequency range D.1.3
Hazards D.1.7, D.3, D.3.5
High-frequency burns .....*see* Burns
Modulation and detection D.2.2.4
Output power, determining D.8
Properties of high-frequency circuits D.2.2
Radio-frequency interference circuits D.3.2
Skin effect D.2.2.3
High-frequency equipment ..... D.2, D.4.2, D.4.3; *see also* Electrosurgery
Anesthetizing locations E.4.6.4
Complications of use D.3.6
Flammable anesthetizing agents, use of E.6.6.8.10, E.6.6.9.10
Input power circuits D.4.2.1, D.4.3.1, D.4.3.2
Inspection of D.5.3.3
Instructions for use D.5.2.2, D.5.2.3, D.5.3.2
Maintenance D.5.3
Output circuits D.4.2.2
Power-generating D.1.7
Protection of D.4.3
Qualifications for use of D.5.1.3, D.5.2.1, D.5.2.4
Safety measures D.4
Training, employees D.5.2
Types of D.2.1
High pressure .....*see* Pressure, high
High-resistance strap E.6.7.4
Home care ..... Chap. 19
Definition 3.3.69
Hoods
Fume .....*see* Fume hoods
Oxygen (definition) 3.3.134
Hose 5.1.10.10.7, 5.3.10.10.11
Hospital-based (definition) 3.3.71
Hospitals ..... Chap. 13, C.13
Definition 3.3.70
Electrical equipment 13.3.8, A.13.3.8.1, A.13.3.8.2
Electrical systems 13.3.4
Emergency preparedness 13.3.12
Essential electrical systems, format for listing functions served by C.4.3
Gas equipment 13.3.9
Gas system ..... 13.3.5, A.13.3.5.1(3)(c)
Governing body 13.2.1
Definition 3.3.62
High-frequency equipment D.1.2
Responsibilities 13.2, A.13.2
Typical wiring arrangement C.4.1
Vacuum systems ..... 13.3.5, A.13.3.5.1(3)(c)

--`,,```,,,,````-`-`,,`,,`,`,,`---
Copyright National Fire Protection Association
Provided by IHS under license with NFPA
No reproduction or networking permitted without license from IHS
Not for Resale

Housekeeping appliances, facility-owned ..... 8.4.2.2.1, 8.5.2.1.2.2 Ex. 2
Human tissues, combustibility C.20.1.1.3.3
Humidification
Anesthetizing locations 6.4.1.1, 6.6.1.1, A.6.4.1.1, E.3.5.3
Hyperbaric facilities 20.2.4.3, A.20.2.4.3.2
Respiratory therapy 9.5.2.4
Humidifiers 6.6.1.1, 9.5.2.5, 9.5.2.6
Definition 3.3.72
Hydrogen C.13.1.3.1.2
Hydrostatic testing 20.2.1.1.8.1
Hyperbaric (definition) 3.3.73
Hyperbaric facilities ..... Chap. 20, C.20
Administration and maintenance 20.3, A.20.3
Air supply, monitoring of 20.2.8.6, A.20.2.8.6
Chambers, classification 20.1.5, A.20.1.5.2
Communications and monitoring equipment 20.2.8, A.20.2.8.2, A.20.2.8.6, A.20.2.8.7
Construction and equipment 20.2, 20.3.2, A.20.2, A.20.3.2
Electrical systems 20.2.7, A.20.2.7
Emergency depressurization capability 20.2.4.5, A.20.2.4.5.3
Emergency procedures ..... 20.3.1.4.3 to 20.3.1.4.6, 20.3.5.1.2, A.20.3.1.4.4.1, A.20.3.1.4.5, A.20.3.1.4.6, C.20.2, C.20.3
Explosion hazard C.20.1.1
Fabrication of chamber 20.2.2, A.20.2.2.1, A.20.2.2.5.2, A.20.2.2.6
Fire hazard C.20.1.1
Fire prevention 20.3.1.5, A.20.3.1.5
Fire protection 20.2.5, 20.2.6, 20.3.6.3, A.20.2.5
Gases
Handling of 20.3.2.2, 20.3.3, A.20.3.2.2, A.20.3.3.4
Monitoring of ..... 20.2.8.3 to 20.2.8.8, A.20.2.8.6 to A.20.2.8.8
Hazards, nature of ..... 20.3.1.2, 20.3.1.5, A.20.3.1.2, A.20.3.1.5.2.2(2), B.7, C.20.2
Housing for 20.2.1, A.20.2.1.1.1, A.20.2.1.1.5, A.20.2.1.2.2
Ignition sources 20.3.1.5.1, C.20.1.1.4
Illumination 20.2.3
Intercommunications equipment 20.2.8.2, A.20.2.8.2
Medical hazards C.20.1.3
Noncombustible (definition) 3.3.123
Other fixtures and equipment 20.2.9, 20.3.2, A.20.3.2
Personnel 20.3.1.3, 20.3.1.4, 20.3.1.5.3, 20.3.1.5.5, A.20.3.1.3, A.20.3.1.4, A.20.3.1.5.3
Physiological hazards C.20.1.3.4
Rules and regulations 20.3.1.3.4, 20.3.1.4, A.20.3.1.3.4, A.20.3.1.3.5
Safe practices 20.3, A.20.3
Ventilation of chambers 20.2.4, 20.2.9.2, A.20.2.4.1.2, A.20.2.4.2.1, A.20.2.4.3.2
Viewports 20.2.2.6, A.20.2.2.6, C.20.1.2.3
Wiring and service equipment ... 20.2.7.3 to 20.2.7.6, A.20.2.7.5.2
Hyperbaric oxygenation (definition) 3.3.74
Hyperthermia D.2.1.7
Hypobaric
Definition 3.3.75
Noncombustible (definition) 3.3.124
Hypoxia (definition) 3.3.76, C.9.2.13

-I-

Identification .....*see* Labeling and identification
Ignition sources .....*see also* Explosion hazard; Fire hazard
Anesthetizing locations C.13.1.3.3
Electrical equipment A.8.4.2.2.2.5
Hyperbaric chambers 20.3.1.5.1, C.20.1.1.4
Oxygen-enriched atmospheres B.2.1
Respiratory therapy locations 9.6.1.1, A.9.6.1.1.2, A.9.6.1.1.3, B.6.1.14
Immediate restoration of service (definition) 3.3.77
Impedance
Definition 3.3.78, A.3.3.78
Of isolated wiring 4.3.2.6.2, A.4.3.2.6.2.1
Limit 4.3.3.1.6.2
Measuring 4.3.3.1.4, A.4.3.3.1.4
Of skin D.2.2.3
IMV (definition) C.9.2.14
Incident command system (ICS) A.12.2.3.2
Definition 3.3.79
Inductive diathermy .....*see* Diathermy, inductive
Inhalation anesthetics, use of .....*see also* Anesthetic apparatus; Anesthetics; Anesthetizing locations
Flammable ..... E.1.3, E.1.7; *see also* Flammable anesthetizing locations
Hazards B.2.1
Nature of B.6.1, C.13.1
Recognition of 13.4.1.1.3.2
Mixed facilities C.13.1.5
Nonflammable C.13.1.2.2.1, C.13.1.4
Other health care facilities C.14
Safety precautions C.13.2
In-line switch 10.2.3.7.4
In-line valves 5.1.4.9
Instrument air
Definition 3.3.80
Supply systems ..... 5.1.3.8, Table 5.1.11, Fig. A.5.1.3.8; *see also* Compressed air system (Level 3)
Alarms 5.1.9.5, A.5.1.9.5
Level 2 piped gas and vacuum systems 5.2.3.8
Insulation
Cardiac electrodes 10.2.12.1.2, 10.2.12.1.4, A.10.2.12.1.2
Hyperbaric chambers, wiring and equipment inside 20.2.7.3.6
Maintenance and testing of 4.4.4.1.2.2
Shock prevention by B.1.2.2.2
Integrity tests 8.4.1.3.1
Intentional expulsion, site of .....*see* Site of intentional expulsion
Intermittent positive-pressure breathing (IPPB) A.5.1.3.5.2
Definition 3.3.81, C.9.2.15
Internal combustion engines 4.4.1.1.16.1
Intrinsically safe
Circuits, hyperbaric chamber 20.2.5.1.3.1, 20.2.7.3.7.5
Definition 3.3.82, A.3.3.82
Flammable anesthetizing locations, equipment in E.4.6.6
Laboratory procedures, electric heating equipment for 8.4.2.2.2.3
Invasive procedure (definition) 3.3.83
IPPB .....*see* Intermittent positive-pressure breathing (IPPB)
Isoflurane C.13.1.3.1.2
Isolated patient leads 10.2.4.3.2, 10.2.13.5.3
Definition 3.3.84
Isolated power systems 4.3.2.2.8.4, 4.3.2.2.9, 4.3.2.6, A.4.3.2.6
Anesthetizing locations E.6.6.2
Definition 3.3.85, A.3.3.85
Low-voltage circuits 10.2.10.4
Tests 4.3.3.3, 4.3.4.2.2
Isolation switch, bypass 4.4.2.1.7
Isolation tests 8.4.1.3.6.3, 10.2.13.5.3
Isolation transformer ..... 4.3.2.6.1, 13.4.1.2.6.5 to 13.4.1.2.6.7, A.4.3.2.6, A.13.4.1.2.6.5
Definition 3.3.86

-J-

Joints
Brazed 5.1.10.5, 5.1.10.10.12, 5.3.10.7, 5.3.10.10.15, A.5.1.10.5.5, A.5.3.10.7.5
Prohibited 5.1.10.8
Soldered 5.3.10.5
Solvent-cemented 5.3.10.6
Special 5.3.10.8, 5.3.10.9
Special fittings 5.1.10.7
Threaded 5.1.10.4, 5.3.10.4
In WAGD networks 5.1.10.9
Welded 5.1.10.6, A.5.1.10.6.5

Copyright National Fire Protection Association
Provided by IHS under license with NFPA
No reproduction or networking permitted without license from IHS
Not for Resale

-L-

Labeled (definition) 3.2.5
Labeling and identification
Anesthetizing locations C.13.3, E.6.4, E.6.5, E.6.7.5
Cylinders and containers ..... 5.1.3.1, 5.3.3.1.1 to 5.3.3.1.4, 9.4.4, A.5.1.3.1.1
Electrical equipment 10.2.8.2, 10.2.8.3
Flammable and combustible liquids storage 11.7.2.6.2
Fume hoods 6.4.3.6
Gas equipment 5.3.12.4.7, 9.6.3.1, 9.6.3.2, A.9.6.3.2
Gas/vacuum systems 5.1.11.1, 5.1.13.2, 5.2.11, 5.3.3.1, 5.3.11, 5.3.13.6
Alarm panels 5.1.11.4
Shutoff valves 5.1.11.2
Station outlets and inlets 5.1.11.3
Verification of 5.1.12.3.13, 5.3.12.3.11, 5.3.12.4.7
Hyperbaric facilities 20.2.5.1.7, 20.2.6.1
Laboratories 6.6.2, 11.8.2, A.6.6.2, A.11.8.2.1, A.11.8.2.3
Oxygen 9.6.3.1, 9.6.3.2
Refrigerating equipment 11.7.2.6.2
Respiratory therapy 9.6.3.1, 9.6.3.2, A.9.6.3.2
Support gas 5.1.14.10
Laboratories ..... Chap. 11, C.11
Biological safety cabinets 6.4.3.1, A.6.4.3.1
Construction and arrangement ... 11.3.1, 11.5.1, A.11.3.1, A.11.5.1
Corridors ..... 11.3.1.1, 11.3.2.5 to 11.3.2.7, A.11.3.1.1
Definitions 3.3.87, A.3.3.87, C.11.2
Electrical equipment and appliances 8.4.2.2.2, 8.5.2.5, 11.4.2, 13.3.8.2, A.8.4.2.2.2, A.8.5.2.5.1, A.8.5.2.5.2, A.11.4.2.1, A.11.4.2.2, A.13.3.8.2
Emergency procedures 11.2.1.3, 11.6, A.11.2.1.3.4, A.11.6
Equipment 11.4, 14.3.8.2, 17.3.8.2, 18.3.8.2, A.11.4.2.1, A.11.4.2.2
Exit details 11.3.2, A.11.3.2.1
Fire incidents, documented C.11.1
Fire prevention 11.2.1, A.11.2.1.1.3, A.11.2.1.3.4, A.11.2.1.4.3
Fire protection 11.5, A.11.5
Flammable and combustible liquids 11.7, A.11.7.2, A.11.7.5
Fume hoods 6.4.3, 6.6.2, 11.3.5, A.6.4.3.1, A.6.4.3.3, A.6.4.3.4, A.6.6.2
Gas equipment 9.5.3.2
Gas systems, piped 11.11, A.11.11.2.1
Gas transfer 11.9
Hazardous materials, disposal of 11.7.5, 11.8.1.4, A.11.7.5, A.11.8.1.4
Hazards, nature of 11.2, 11.8.2, A.11.2.1.1.3, A.11.2.1.3.4, A.11.2.1.4.3, A.11.8.2.1, A.11.8.2.3
Hospital 13.3.11, A.13.3.11
Limited care facilities 18.3.8.2, 18.3.11, A.18.3.11
Liquids, equipment with 11.4.2, A.11.4.2.1, A.11.4.2.2
Maintenance and inspection 11.2.1.1.2, 11.8, A.11.8
Nursing homes 17.3.8.2, 17.3.11, A.17.3.11
Other health care facilities 14.3.8.2, 14.3.11
Personnel ..... 11.2.1.4, 11.8.1.1.3, 11.8.2.3 to 11.8.2.5, A.11.2.1.4.3, A.11.8.2.3
Power outlets 4.3.2.3
Refrigeration equipment 11.7.2.6, A.11.7.2.6
Safety in 11.2.1.4, 11.8, A.11.2.1.4.3, A.11.8
Ventilation 6.4.2, 6.4.3, 6.6.2, 11.3.4, A.6.4.2.1, A.6.4.3, A.6.6.2, A11.3.4, A.11.3.4
Laboratory hoods ..... *see* Hoods
Laboratory work area (definition) 3.3.88, A.3.3.88
Lasers
Hyperbaric facilities 20.3.2.1.4
Medical D.2.1.8
Surgery B.5.3.2
Leakage current 8.4.2.2.1.1, 8.5.2.1.3, B.1.2.2.4
Definition 3.3.89
Frequency 8.4.1.3.3.3, 10.2.13.3.2, A.8.4.1.3.3.3, A.10.2.13.3.2
Limits 10.2.13.3.2, 10.2.13.4.3, 10.2.13.5, A.10.2.13.3.2, A.10.2.13.4.3
Polarity, in relation to 8.4.1.3.3.4, 10.2.13.3.3
Leakage tests 8.4.1.3.3, A.8.4.1.3.3
Appliance to ground 10.2.13.4, A.10.2.13.4.3
Exposed conductive surfaces 10.2.13.4.1
Between leads 8.4.1.3.6.4, 8.4.1.3.6.5, 10.2.13.5.4, 10.2.13.5.5
Leads and limits 10.2.13.5
Manufacturers ... 10.2.13.3 to 10.2.13.5, A.10.2.13.3, A.10.2.13.4.3
Methods 10.2.13.4.1
Patient leads and grounds 8.4.1.3.6.1, 8.4.1.3.6.2, 10.2.13.5.2, A.8.4.1.3.6.1
Level 3 compressed air system ..... *see* Compressed air system (Level 3)
Level 1 medical piped gas and vacuum systems ..... 5.1, A.5.1; *see also* Vacuum systems
Alarms ..... *see* Alarm systems
Definition 3.3.90
Designation colors/operating pressures ..... Table 5.1.11
Distribution 5.1.10, A.5.1.10
Hazards, nature of 5.1.2
Labeling and identification 5.1.11
Maintenance C.5.2
Manufactured assemblies 5.1.6, A.5.1.6
Operation and management 5.1.13, A.5.1.13
Other health care facilities ..... 14.3.5.1(1)
Performance criteria 5.1.12
Pressure and vacuum indicators ..... 5.1.8, C.5.1.8.8(1), C.5.2.5
Retesting C.5.2
Sources ..... 5.1.3, A.5.1.3; *see also* Central supply system, Level 1
Instrument air supply systems ..... 5.1.3.8, Fig. A.5.1.3.8
Medical air supply systems 5.1.3.5, A.5.1.3.5, C.5.1.2, C.5.2.8
Medical–surgical vacuum supply systems 5.1.3.6, A.5.1.3.6
Reserves
Bulk cryogenic liquid systems 5.1.3.4.13.6, A.5.1.3.4.13, C.5.2.4
In-building emergency reserves 5.1.3.4.15
Warning signals 5.1.9.2.4, C.5.1.4, C.5.1.5, C.5.2.11, C.5.2.12, C.5.2.13
Verification of equipment 5.1.12.3.14
Waste anesthetic gas disposal (WAGD) 5.1.3.7, A.5.1.3.7
Station outlets/inlets 5.1.5, 5.1.11.3, A.5.1.5, C.5.2.18
Support gases 5.1.14
Surface-mounted medical gas rails 5.1.7, A.5.1.7
Valves ..... 5.1.4, 5.1.12.3.4, A.5.1.4, Fig. A.5.1.4, C.5.2.17
Level 2 medical piped gas and vacuum systems 5.2, A.5.2.1
Definition 3.3.92
Other health care facilities ..... 14.3.5.1(2)
Level 3 piped gas systems 5.3, A.5.3
Alarms ..... *see* Alarm systems
Definition 3.3.94
Distribution 5.3.10, A.5.3.10.7.5, A.5.3.10.10.3
Gas-powered devices
Piping 5.3.10.1.2
Supply systems 5.3.3.5, A.5.3.3.5
Hazards, nature of 5.3.2
Labeling and identification 5.3.11, 5.3.12.3.11
Operation and management 5.3.3.2, 5.3.13, A.5.3.3.2
Other health care facilities ..... 14.3.5.1(3), A.14.3.5.1(3)(c)
Performance criteria ..... 5.3.12, A.5.3.12.3.10(3)(b)
Sources 5.3.3
Gas-powered devices supply systems 5.3.3.5
Identification and labeling 5.3.3.1
Locations 5.3.3.3.2
Medical gas supply systems 5.3.3.4, A.5.3.3.4.4
Operations 5.3.3.2, A.5.3.3.2
Reserves 5.1.9.2.4, 5.3.3.5.8, A.5.3.3.5.8, C.5.1.4, C.5.1.5, C.5.2.11, C.5.2.12, C.5.2.13
Systems 5.3.3.3
Vacuum sources 5.3.3.6, A.5.3.3.6
Verification of equipment 5.3.12.3.12

Copyright National Fire Protection Association
Provided by IHS under license with NFPA
No reproduction or networking permitted without license from IHS
Not for Resale

Station and service outlets/inlets 5.3.5, 5.3.11.3, A.5.3.5
Valves 5.3.4, A.5.3.4
Warning systems 5.3.9
Level 1 vacuum systems .....*see* Vacuum systems
Level 3 vacuum systems .....*see* Vacuum systems
Life safety branch ..... 4.4.2.2.1.1, 4.4.2.2.2.2, A.4.4.2.2.2.2(4), A.4.4.2.2.2.3
Definition 3.3.96
Life support equipment, electrical 14.3.4.2.1
Definition 3.3.37
Lighting .....*see also* Photographic lighting equipment
Ceiling-suspended fixtures E.6.6.5
Fixed, anesthetizing locations E.6.6.4
Hyperbaric chambers 20.2.7.3.15, A.20.2.7.3.15
Lightning hazard C.13.1.3.3.1
Limited care facility ..... Chap. 18
Definition 3.3.97
Limited-combustible material (definition) 3.3.98, A.3.3.98
Line isolation monitor 4.3.2.6.3, A.4.3.2.6.3.1, A.4.3.2.6.3.3, A.4.3.2.6.3.4
Definition 3.3.99
Testing 4.3.3.3.2
Line voltage equipment 8.4.1.2.4, A.8.4.1.2.4.2, E.4.5, E.4.6
Variations and transients 10.2.5, A.10.2.5
Liquids
Definition 3.3.100, A.3.3.100
Equipment employing 11.4.2, A.11.4.2.1, A.11.4.2.2
Flammable and combustible .....*see* Flammable and combustible liquids
Listed (definition) 3.2.6, A.3.2.6
Local signal (definition) 3.3.101, A.3.3.101
Low-frequency electrical shock D.3.4
Low-voltage equipment 10.2.10, D.4.3.5, E.4.7
Lubricants 20.3.2.4, 20.3.6.2.2.4, 20.3.6.2.2.5, C.20.1.1.3.1

-M-

mA (definition) 3.3.102
Main lines, piping
Definition 3.3.145.2
Valves 5.1.4.5, 5.1.11.2.4, A.5.1.4.5
Maintenance logs
Electrical equipment 8.5.3.1.3
Hyperbaric facilities 20.3.4.2
Management, emergency planning by 12.2.2
Manifolds ..... 5.1.3.3.1.1, 5.1.3.3.1.2, 5.1.3.4(1), 5.1.3.4(2), 5.3.13.1, 9.7.2
Cryogenic liquid cylinders ..... 5.1.3.4.12, Fig. A.5.1.3.4.12, C.5.2.2, C.5.2.3
Cylinders without reserve supply, for ..... 5.1.3.4.10, Fig. A.5.1.3.4.10, C.5.2.1
Cylinders with reserve supply, for 5.1.3.4.11
Definition 3.3.103
Manuals
Anesthetizing equipment 9.6.1.3.4
Electrical appliances 8.5.2.1.10, 8.5.3.1.1, 10.2.8, A.8.5.2.1.10
High-frequency equipment D.5.2.2, D.5.3.2
Respiratory equipment 9.6.1.3.4
Manufactured assemblies B.2.3.4
Definition 3.3.104, A.3.3.104
Level 1 piped gas and vacuum systems 5.1.6, A.5.1.6
Support gases 5.1.14.6
Level 2 piped gas and vacuum systems 5.2.6
Manufacturer's requirements
Electrical equipment ..... Chap. 10
Piping system installation 5.1.10.10.9, 5.3.10.10.13
Mask
Definition 3.3.105
Oxygen mask microphones 20.2.8.2.2
Materials ..... Chap. 7
Measurement, units of 1.5, A.1.5.1
Mechanical cleansing C.13.2.5.1
Mechanical hazards
Anesthetizing locations C.13.1.2.3
Hyperbaric facilities C.20.1.2
Respiratory therapy administration, during B.2.3.3
Waste anesthetic gas disposal B.2.3.2, B.2.3.3
Medical air
Alarms 5.1.3.5.10, 5.1.3.5.14, A.5.1.3.5.10
Area ..... 5.1.9.3, A.5.1.9.3.4(1), Table A.5.1.9.3, C.5.1.7
Master ..... 5.1.9.2.4, C.5.1.4 to C.5.1.6, C.5.2.10 to C.5.2.13
Definition 3.3.106, A.3.3.106
Designation colors/operating pressures ..... Table 5.1.11
Dryers 5.1.3.5.7, 5.1.3.5.11.5, 5.1.3.5.11.6, 5.1.3.5.11.9, A.5.1.3.5.11.6
Filters 5.1.3.5.8, 5.1.3.5.11.5, 5.1.3.5.11.6, 5.1.3.5.11.9, A.5.1.3.5.11.6
Level 1 supply systems 5.1.3.5, A.5.1.3.5, C.5.1.2, C.5.2.8
Level 2 supply systems 5.2.3.5
Purity test 5.1.12.3.12
Quality monitoring 5.1.3.5.15, C.5.2.6
Receivers 5.1.3.5.6, 5.1.3.5.11.4, 5.3.3.5.4, A.5.1.3.5.11.4
Regulators 5.1.3.5.9, 5.1.3.5.11.5, 5.1.3.5.11.6, 5.1.3.5.11.9, A.5.1.3.5.11.6
Medical air compressors ..... 5.1.3.4(4), 5.1.3.5.1, 5.1.3.5.3, 5.1.3.5.4, 5.1.3.5.8.1, 5.1.3.5.11.2, A.5.1.3.5.1 to A.5.1.3.5.4.1, C.5.1.2; *see also* Compressed air system (Level 3)
Alarms 5.1.9.5, A.5.1.9.5
Definition 3.3.107
Electrical power and control 5.1.3.5.12
Filters A.5.1.3.5.1
Instrument 5.1.3.8.3.3, 5.1.3.8.4
Intake 5.1.3.5.13, 5.1.3.8.6, 5.3.3.5.7, 20.2.4.2, A.5.1.3.5.1, A.5.3.3.5.7
Multiple pressures ..... 5.1.3.7(1)
Tests 5.1.12.3.14.3
Medical/dental office .....*see also* Other health care facilities
Definition 3.3.108, A.3.3.108
High-frequency equipment D.1.2
Medical gases .....*see also specific gases*
Concentration test ..... 5.1.12.3.11, A.5.1.12.3.11(3)
Definition 3.3.109
Prohibited uses 5.1.3.4.2, A.5.1.3.4.2
Medical gas rails (MGRs) .....*see* Surface-mounted medical gas rail systems
Medical gas systems ..... Chap. 5, 13.4.1.2.7.2; *see also* Cylinders; Gas equipment; Medical gases; Supply systems; Vacuum systems; Waste anesthetic gas disposal (WAGD) systems
Birthing centers 21.3.5
Changes in system use 5.1.10.10.10, 5.3.10.10.14
Cross-connection .....*See* Cross-connection test
Definition 3.3.110
Distribution, piped .....*see* Piped distribution system
Hazards of B.2
Hospital ..... 13.3.5, A.13.3.5.1(3)(c)
Installers, qualification of 5.1.10.10.11, 5.1.10.10.12, 5.3.10.10.1
Labeling 5.1.13.2, 5.3.13.6
Level 1 .....*see* Level 1 medical piped gas and vacuum systems
Level 2 ..... 5.2, A.5.2.1
Definition 3.3.92
Level 3 .....*see* Level 3 piped gas systems
Limited care facilities ..... 18.3.5, A.18.3.5.1(3)(c)
Maintenance ..... 5.3.13.7, 9.8, A.9.8.7(3), A.9.8.9
Manufactured assemblies
to use with .....*see* Manufactured assemblies
Nitrous oxide .....*see* Nitrous oxide
Nursing homes ..... 17.3.5, A.17.3.5.1(3)(c)
Other health care facilities ..... 14.3.5, A.14.3.5.1(3)(c)
Record keeping ..... 5.3.13.7, 9.8, A.9.8.7(3), A.9.8.9
Special precautions 5.1.13.1, 5.3.10.10.10, 5.3.13.5

Copyright National Fire Protection Association
Provided by IHS under license with NFPA
No reproduction or networking permitted without license from IHS
Not for Resale

Standard designation colors and operating pressures ..... Table 5.1.11
Storage ..... 5.1.3.1.8, 5.1.3.1.9, 5.1.3.2.3, 5.3.3.3.2 to 5.3.3.3.6, C.14.2
Medical hazards
Hyperbaric facilities C.20.1.3
Respiratory therapy C.9.1
Medical support gas (definition) 3.3.11
Medical–surgical vacuum (definition) 3.3.112
Medical–surgical vacuum systems .....*see* Vacuum systems, medical–surgical
Medicaments 13.4.1.2.2.1
Flammable C.13.1.3.2
Methoxyflurane C.13.1.3.1.2
Microphones, oxygen mask 20.2.8.2.2
Microwave diathermy D.2.1.5
Microwave ovens, hazards of D.3.5.6
Microwave therapy radiation D.2.2.5.2
Mixed facilities
Definition E.1.6, E.8.1.1
Requirements for E.6.7
Rules and regulations C.13.1.5.3, E.8
Use of inhalation anesthetics in C.13.1.5
Moisture indicators 5.3.3.5.5, A.5.3.3.5.5
Monitor hazard current .....*see* Hazard current, monitor
Motor load transfer 4.4.2.1.4.13
Multiple treatment facility (definition) 3.3.114
mV (definition) 3.3.115

-N-

Nasal cannula (definition) 3.3.116
Nasal catheter (definition) 3.3.117
Nebulizers 9.5.2.5, 9.5.2.6
Definition 3.3.118
Ultrasonic (definition) C.9.2.21
Negative pressure (definition) 3.3.119
Neurosurgical lesion generator D.2.1.3
Nitrogen .....*see also* Medical gases; Support gases
Definition 3.3.120
Joints, purging of 5.1.10.5.5, 5.3.10.7.5, A.5.3.10.7.5, A.5.10.5.5
Oil-free, dry ..... 5.1.3.5.1(1), 5.1.12.2.2, 5.1.12.3.1.2, 5.3.10.7.5.1, 5.3.12.3.4.5, 5.3.12.3.6, 5.3.12.3.7, 5.3.12.3.9.1
Definition 3.3.120.1
Nitrogen narcosis C.20.1.3.2, C.20.1.3.5
Definition 3.3.121
Nitrous oxide
Definition 3.3.122
Handling 9.7.1.3
Hazards B.2.1, B.6.1, C.13.1.3.1.2, D.3.5.4
Storage 9.4.2.2, 9.7.1.3
Nitrous oxide systems
Bulk (definition) 3.3.19.1
Closing off C.13.2.3
Designation colors/operating pressures ..... Table 5.1.11
Indoor locations for 5.1.3.3.1.6
Other health care facilities 14.3.5.2
Proper delivery, method of C.13.2.3
Supply systems ..... 5.1.3.3.1.8, 5.1.3.3.1.10, 5.1.3.4.2, 5.1.3.4.4(2), A.5.1.3.4.2
WAGD for 13.3.5.2
Noise level, high, hyperbaric facilities C.20.1.3.4, C.20.1.3.5
Noncombustible (hyperbaric) (definition) 3.3.123
Noncombustible (hypobaric) (definition) 3.3.124
Noncombustible material (definition) 3.3.125, A.3.3.125
Nonconductive coupling D.2.2.2
Nonflammable (definition) 3.3.126
Nonflammable anesthetic agent .....*see also* Anesthetics; Inhalation anesthetics, use of
Definition 3.3.127, A.3.3.127
Nonflammable anesthetizing location .....*see* Anesthetizing locations
Nonflammable gases ..... 9.4; *see also* Medical gases
Nonflammable medical gas system .....*see* Medical gas systems; Vacuum systems, medical–surgical
Nursing homes ..... Chap. 17
Definition 3.3.129

-O-

Oil indicator 5.3.3.5.6
Operating equipment logs ..... 20.3.4.2.2; *see also* Maintenance logs
Operating rooms
Hyperbaric chambers 20.2.4.3.3
Temperature E.3.5.4
Ventilation air E.3.5.2
Operating supply (definition) 3.3.173.1
Operating table, connection of patient to E.6.7.4
Oscillators
Electrosurgical D.2.1.1.4
Spark gap D.2.1.1.4, D.6.8
Other health care facilities ..... Chap. 14, A.14.3.5.1(3)(c), C.14; *see also* Anesthetizing locations; Inhalation anesthetics, use of
Cylinders, typical gas ..... Table C.13.5
High-frequency equipment D.1.2
Regulations for C.14.2
Outdoor signal transmission lines 10.2.9.1.2
Outlets .....*see* Electrical receptacles
Overcurrent protection 10.2.3.6, A.10.2.3.6
Oxidizing gas (definition) 3.3.130, A.3.3.130
Oxygen .....*see also* Medical air; Medical gases
Ambulatory patients receiving 9.6.2.4
Compatibility 20.3.2.3, 20.3.2.4
Definition 3.3.131, A.3.3.131
Designation colors/operating pressures ..... Table 5.1.11
Gaseous (definition) 3.3.131.1
Handling ..... 9.7.1.3, 9.7.2, 20.3.2.2 to 20.3.2.4, A.20.3.2.2
Hazards B.2.1, B.6.1, D.3.5.4
Liquid 20.3.3.2
Definition 3.3.131.2, A.3.3.131.2
Transferring 9.6.2.3
Monitoring 20.2.8.4
Storage 5.1.3.1.9, 9.4.2.2, 9.7.1.3, 20.3.2.2, A.20.3.2.2, A.20.3.3.4
Therapy .....*see* Hyperbaric facilities
Toxicity C.20.1.3.2
Hyperbaric (definition) 3.3.136
In hyperbaric treatments (definition) A.3.3.135
Transferring 9.6.2.2.2, 9.6.2.2.3, 9.6.2.3, B.2.1, B.6.1.12
Oxygen cylinders .....*see* Cylinders
Oxygen delivery equipment .... 8.5.2.4.5, A.8.5.2.4.5, C.13.2.3; *see also* Cylinders; Pipe and piping, gas
Definition 3.3.132, A.3.3.132
Hazards 9.6.1.1.4, 9.6.1.2.2, B.6.1.12
Maintenance of 8.5.2.2.3, 9.6.1.3.3
Oxygen enclosures 9.5.2.2
Oxygen-enriched atmosphere
Definition 3.3.133
Electrical appliances in 8.5.2.4.4, 8.5.2.4.5, 10.2.7.2, 10.2.9.3, A.8.5.2.4.5, A.10.2.7.2
Hazards of 9.6.1.2.1, B.2.1, B.6.1.2, B.6.1.5, B.6.1.7, B.6.1.8, B.6.1.11, B.6.1.13, C.20.1.1.3.4, C.20.1.1.3.5, C.20.1.1.4.3, D.3.5.4
Labeling of equipment for use in 9.6.3.1.1
Oxygen hoods (definition) 3.3.134
Oxygen index (definition) 3.3.135
Oxygen service–related documents C.5.3
Oxygen systems .....*see also* Oxygen delivery equipment
Bulk (definition) 3.3.19.2, A.3.3.19.2
Closing off C.9.3.3, C.13.2.3
Indoor locations for 5.1.3.3.1.6
Supply systems ..... 5.1.3.3.1.9, 5.1.3.4.2, 5.1.3.4.4(2), A.5.1.3.4.2
Emergency oxygen supply connection (EOSC) 5.1.3.4.14, A.5.1.3.4.14

--`,,```,,,,````-`-`,,`,,`,`,,`---

Copyright National Fire Protection Association
Provided by IHS under license with NFPA
No reproduction or networking permitted without license from IHS
Not for Resale

-P-

Pacemakers, interference and D.4.3.4
Paper 20.3.2.1.6, A.20.3.2.1.6
Partial pressure .....*see* Pressure, partial
Patient bed location (definition) 3.3.137
Patient care areas ..... 13.2.4; *see also* Electrical systems
Definition 3.3.138, A.3.3.138
Electrical appliances, testing of 8.5.2.1.2.2
Other health care facilities 14.3.8.1
Patient-care–related electrical appliances 8.4.1, 10.2, 20.2.7.3.17, A.8.4.1, A.10.2, A.20.2.7.3.17
Definition 3.3.139
Patient care vicinity (definition) 3.3.140
Patient equipment grounding point (definition) 3.3.141
Patient impedance measuring devices 10.2.9.2.2.3, A.10.2.9.2.2.3
Patient leads ..... 8.5.2.1.3; *see also* Electrical wiring
Connections 10.2.4.3
Definition 3.3.142, A.3.3.142
Isolated 10.2.4.3.2, 10.2.13.5.3
Definition 3.3.84
Receptacles for 10.2.4.1, 10.2.4.2, A.10.2.4.2
Patient management, in emergencies 12.3.3.4, A.12.3.3.4, C.9.3.5, C.13.4.5
Patient medical gas (definition) ..... 3.3.143; *see also* Medical air; Nitrous oxide; Oxygen
Patient-monitoring electrodes D.4.3.3
PEEP (definition) C.9.2.16
Photographic lighting equipment 20.3.2.1.3, E.4.6.7, E.4.6.8
Physicians, discretionary use of nonconforming materials 20.3.1.5.4.4
Physiological hazards, hyperbaric facilities C.20.1.3.4
Pin-index safety system 9.5.1.2, A.9.5.1.2
Pipe and piping, gas
Anesthetizing locations E.6.6.7
Branch (lateral) line (definition) 3.3.145.1
Branch takeoffs 5.1.10.10.6, 5.3.10.10.9
Definitions 3.3.145
Ground, use as 5.1.13.1.3, 5.3.13.5.2
Hyperbaric facilities 20.2.9.3, 20.3.4.1.3
Installation 5.1.10.10, 5.3.10.10
Instrument air systems 5.1.3.8.9
Interconnections, prohibited 5.1.10.10.8, 5.3.10.10.12
Labeling 5.1.11.1, 5.3.11.1
Laboratories 11.11, A.11.11.2.1
Level 1 ... 5.1.3.5.11, 5.1.12, A.5.1.3.5.11.4, A.5.1.3.5.11.6, A.5.1.12
Distribution 5.1.10, A.5.1.10
Supply 5.1.3.5.11, 5.1.3.6.5, 5.1.3.8.9, A.5.1.3.5.11.4, A.5.1.3.5.11.6
Support gas 5.1.14.9
Level 2 ..... 5.2.10
Level 3, distribution 5.3.10, A.5.3.10.7.5, A.5.3.10.10.3
Main line (definition) 3.3.145.2
Manufacturer's instructions 5.1.10.10.9
Nitrous oxide C.13.2.3
Nonflammable medical gases 13.4.1.2.7.2
Oxygen C.13.2.3
Special precautions 5.1.13.1, 5.3.10.10.10
Support 5.1.10.10.4, 5.3.10.10.6
Tests ..... 5.1.12, 5.3.12, 5.3.12.4.2 to 5.3.12.4.8, A.5.1.12, A.5.3.12.3.10(3)(b)
Installer performed tests 5.1.12.2
System verification ..... 5.1.12.3, 5.3.12.3, 5.3.12.4.8.2, A.5.1.12.3.11(3), A.5.3.12.3.10(3)(b)
Underground piping outside of buildings 5.1.10.10.5, 5.3.10.10.8
Underground piping within buildings/within floor slabs 5.3.10.10.7
Piped distribution system ..... 5.1.10, 5.3.10, A.5.1.10, A.5.3.10.7.5, A.5.3.10.10.3; *see also* Central supply system, Level 1; Central supply system, Level 2
Definition 3.3.144
Piped gas systems .....*see* Medical gas systems
Plastics, combustibility of C.13.2.4.1.1
Plugs (attachment plugs, caps) ..... 8.4.1.2.2, 8.4.1.2.4.3(2), 8.4.1.2.5(1), 10.2.13.2
Definition 3.3.146
Hyperbaric chambers ..... 20.2.7.3.17.6(3)
Low-voltage 10.2.10.3
Patient–care related locations 10.2.2.1, A.10.2.2.1
Portable equipment .....*see* Equipment, portable
Positive-negative pressure breathing (definition) 3.3.147
Positive pressure
Change in system 5.1.10.10.10.1
Definition 3.3.148.6
Initial piping purge test 5.3.12.2.6
Initial pressure test 5.3.12.2.3
Initial standing pressure test 5.3.12.2.7
Labeling of systems ..... 5.1.11.1.1(3), 5.1.11.2.2
Standing pressure test 5.1.12.2.6
Power cords ..... 8.4.1.2.3, 8.4.1.2.5(2), 8.5.2.1.7, 13.4.1.2.5.2, A.8.4.1.2.5(2)
Appliances 10.2.3.3, 10.2.3.4, 10.2.13.2
Flammable anesthetizing locations E.4.5.1, E.4.5.2
High-frequency equipment D.4.2.5
Hyperbaric chambers 20.2.7.3.9, 20.2.7.3.17.6
Patient-care–related locations 10.2.2, 10.2.3, A.10.2.2, A.10.2.3.2, A.10.2.3.6
Strain relief ..... 10.2.2.1.10, 10.2.2.2.7, 10.2.13.2(2)
Power outlets .....*see* Electrical receptacles
Power systems .....*see* Electrical systems
Pressure
Absolute (definition) 3.3.148.1
Ambient (definition) 3.3.148.2
Gauge (definition) 3.3.148.3
High (definition) 3.3.148.4
Multiple, central supply system 5.1.3.4.7
Negative (definition) 3.3.119
Partial (definition) 3.3.148.5, A.3.3.148.5
Positive .....*see* Positive pressure
Standard operating pressures, gas and vacuum systems ..... Table 5.1.11
Working (definition) 3.3.148.7, A.3.3.148.7
Pressure indicators 5.1.8, 5.1.14.7, 5.2.8, C.5.2.5, C.5.2.14
Pressure-reducing regulators ..... 9.3.6 to 9.3.8, 9.6.3.1.2, 9.6.3.1.3
Definition 3.3.149, A.3.3.149
Pressure regulators, final line 5.1.3.4.5
Pressure relief valves 5.1.3.4.6, 5.3.3.4.2.2, 5.3.3.4.2.3, 20.3.4.1.1.1, C.5.1.1
Medical air system 5.1.3.5.11.10
Pressure testing
Individual pressurization 5.1.12.3.3.1
Initial pressure test 5.1.12.2.3, 5.3.12.2.3
Operational pressure 5.1.12.3.10
Pressure differential 5.1.12.3.3.2
Standing pressure tests 5.1.12.2.6, 5.1.12.3.2, 5.3.12.2.7, 5.3.12.3.2, 5.3.12.4.2, A.5.1.12.3.2
Verifier operational pressure test 5.3.12.3.9
Pressure vessels .....*see* Hyperbaric facilities
Primary power control switch 10.2.3.7
Prime movers ..... 4.4.1.1.1.2(4)
Procedure room (definition) 3.3.150
Programmable appliances, de-energization of 10.2.6.5.3
Psia (pounds per square inch absolute)
Definition 3.3.151
Psig (pounds per square inch gauge)
Definition 3.3.152, A.3.3.152
Pumps, vacuum .....*see* Vacuum pumps
Purge test, piping 5.1.12.2.5, 5.3.12.2.6, 5.3.12.4.5
Purpose of standard 1.2

-Q-

Quiet grounds 4.3.2.2.7.1, A.4.3.2.2.7.1
Definition 3.3.153

Copyright National Fire Protection Association
Provided by IHS under license with NFPA
No reproduction or networking permitted without license from IHS
Not for Resale

-R-

Rack-mounted equipment 10.2.3.8
Radiation
Electromagnetic D.2.2.5
Equipment in hyperbaric chambers 20.3.2.6, A.20.3.2.6
High-frequency D.2.2.5.2
Nonionizing radiation burns and ignition D.3.8
Radioactive materials
Emergency preparedness C.12.3.9
Fume hoods used with 6.4.3.3, A.6.4.3.3
Radio frequency power ..... *see also* High-frequency electricity
Burns from D.3.8.1
Diathermy D.2.1.4, D.3.3.2
Interference D.3.2
Reactance (definition) 3.3.154
Reactive material (definition) 3.3.155, A.3.3.155
Reactivity (instability) hazards C.11.2.3.3
Rebreathing systems C.13.1.3.1.3, E.6.6.9.6
Receptacles, selected ..... *see* Electrical receptacles
Reference grounding point ..... 4.3.3.1.2(1)
Definition 3.3.156
Reference point 4.3.3.1.2
References ..... Chap. 2, D.9, Annex G
Refrigerating equipment 11.7.2.6, A.11.7.2.6
Definition 3.3.157, A.3.3.157
Regulators
Cylinders ..... 9.3.6 to 9.3.8
Medical air 5.1.3.5.9, 5.1.3.5.11.5, 5.1.3.5.11.6, 5.1.3.5.11.9, A.5.1.3.5.11.6
Pressure-reducing ..... *see* Pressure-reducing regulators
Relative analgesia (definition) 3.3.158
Remote (definition) 3.3.159, A.3.3.159
Resectoscope D.7.5
Reserve supply (definition) 3.3.160
Reservoir jars 9.5.2.4
Resistance measurement 10.2.13.2
Resistance testing 8.4.1.3.2, 8.4.1.3.3.1, A.8.4.1.3.2
Respiration (definition) C.9.2.17
Respiratory therapy
Administration and maintenance 9.6, A.9.6.1.1.2, A.9.6.1.1.3, A.9.6.3.2
Apparatus for 9.5.2
Carts and hand trucks 9.5.3.1
Chemical hazards B.6.2.1
Cylinder and container connections C.9.4
Electrical equipment ... 8.5.2.4, A.8.5.2.4.1, A.8.5.2.4.5, A.8.5.2.4.6
Equipment labeling 9.6.3.1
Equipment servicing and maintenance 9.6.1.3, C.9.1.1.1
Equipment transport, storage, and use 9.6.3.3, C.9.1.1
Fire emergency procedures C.9.3
Fire hazards 9.6.1.1, 9.6.1.2, A.9.6.1.1.2, A.9.6.1.1.3, B.2.1, B.6.1.2
Glossary of terms C.9.2
Mechanical hazards B.2.3.3
Medical safeguards C.9.1
Safety B.6.3
Toxicity during B.2.3.1
Risers, piping
Definition 3.3.145.3
Valves 5.1.4.6, 5.1.11.2.5
RLF (definition) C.9.2.18

-S-

Safety can (definition) 3.3.161
Safety mechanisms 5.3.13.3, 9.7.4
Safety officer, laboratory 11.8.1.1, 11.8.1.2, 11.8.2.4, A.11.8.1.1, A.11.8.1.2
Safety showers 11.6, A.11.6
Scavenging ..... *see also* Waste anesthetic gas disposal
Definition 3.3.162
SCFM (standard cubic feet per minute)
Definition 3.3.163
Scope of standard ..... 1.1, A.1.1.11.1(3), A.1.1.12, A.1.1.20
Selected receptacles (definition) 3.3.164
Self-extinguishing (definition) 3.3.165
Semipermanent connection (definition) 3.3.166
Sensors, inside hyperbaric chambers 20.2.8.1.1
Separable cord sets 10.2.2.2.3
Service inlets 5.3.5, 5.3.11.3, A.5.3.5
Definition 3.3.167
Service outlets 5.3.5, 5.3.11.3, A.5.3.5
Definition 3.3.168
Service valves 5.1.4.7, 5.1.11.2.6
Shall (definition) 3.2.7
Shock hazard ..... *see* Electric shock (electrostatic) hazard
Should (definition) 3.2.8
Shutoff valves 5.3.13.5.4, C.5.1.3
Accessibility 5.1.4.2
Emergency 5.3.4.1
Emergency showers 11.6.2, A.11.6
Fume hoods 6.4.3.6
Gas ..... 5.1.4.1 to 5.1.4.5, 5.3.3.4.2.1, 5.3.4.1, A.5.1.4.5, A.5.3.4
Gas equipment-laboratory 9.5.3.2
Labeling 5.1.11.2, 5.3.11.2
Types 5.1.4.3
Vacuum ..... 5.1.4.1 to 5.1.4.5, A.5.1.4.5
Signal transmission 10.2.9.1, A.10.2.9.1.1, E.6.6.6
Signs ..... *see* Labeling and identification
Single treatment facilities (definition) 3.3.169, A.3.3.169
Site of intentional expulsion (definition) 3.3.170, A.3.3.170
Skin, impedance of ..... *see* Impedance, of skin
Smoke detectors ..... *see* Fire detection systems
Smoking 9.6.1.1.1, 9.6.2.4, 9.6.3.2, 13.4.1.2.3, 20.3.1.5.1.1, A.9.6.3.2, E.8.3
Solids, flammability hazard of ..... Table C.2.3.2
Sound-deadening materials 20.2.2.5.2, A.20.2.2.5.2
Source valves 5.1.4.4, 5.1.11.2.3
Spark gap oscillator D.2.1.1.4, D.6.8
Special procedure rooms, ventilation E.3.5.2
Staff ..... *see* Employees
Standard
Adoption
Requirements 1.6
Sample ordinance ..... Annex F
Definition 3.2.9
Enforcement 1.6.2
Station inlets 5.1.5, 5.1.11.3, 5.2.5, 5.3.5, A.5.1.5, A.5.3.5, C.5.2.18
Definition 3.3.171
Station outlets 5.1.5, 5.1.11.3, 5.2.5, 5.3.5, A.5.1.5, A.5.3.5, C.5.2.18
Definition 3.3.172
Sterilization C.13.2.5.1
Storage
Anesthetics, flammable 13.4.1.1.1.2, E.6.6.1, E.6.8
Definition E.1.7
Containers ..... *see* Containers
Cylinders ..... *see* Cylinders
Flammable and combustible liquids 11.7.2, A.11.7.2
Flammable gases 20.3.3.3, 20.3.4.1.5.1
Gas systems ..... *see* Medical gas systems
Hazardous materials 20.3.4.1.5
Mixed facilities E.6.7.2
Nonflammable gases 9.4
Oxygen 5.1.3.1.9, 20.3.2.2, A.20.3.2.2, A.20.3.3.4
Respiratory therapy equipment 9.6.3.3, C.9.1.1
Storage areas
Ambulatory care facilities, gas storage C.14.2
Location 9.4.2
Storage cabinets 11.7.2.3.2
Construction 11.7.2.2
Venting 11.7.2.4
Strap, high-impedance E.6.7.4

Copyright National Fire Protection Association
Provided by IHS under license with NFPA
No reproduction or networking permitted without license from IHS
Not for Resale

Supply source .....*see also* Level 1 medical piped gas and vacuum systems; Level 3 piped gas systems
Operating supply (definition) 3.3.173.1
Primary supply (definition) 3.3.173.2
Reserve supply (definition) 3.3.173.3
Secondary supply (definition) 3.3.173.4
Supply systems .....*see also* Central supply system, Level 1; Central supply system, Level 2; Level 1 medical piped gas and vacuum systems; Level 2 medical piped gas and vacuum systems; Level 3 piped gas systems; Pipe and piping, gas; Piped distribution system
Anesthetizing locations 6.4.1.2, C.13.2.3
Hyperbaric facilities 20.2.4.1.3.2
Portable 9.5.1, A.9.5.1.1, A.9.5.1.2, A.9.5.1.4
Support gases .....*see also* Instrument air; Nitrogen
Central supply system for 5.1.3.4.3
Definition 3.3.174
Level 1 ..... 5.1.3.4.3, 5.1.14
Medical (definition) 3.3.111
Surface-mounted medical gas rail systems 5.1.7, 5.2.7, A.5.1.7
Definition 3.3.175, A.3.3.175
Switches .....*see also specific types of switches, such as* Transfer switches
Anesthetizing locations 13.4.1.2.6, E.2.3
Essential electrical systems 4.4.2.1, 4.4.2.2.4.3, 4.5.3.2, A.4.4.2.1.4, A.4.4.2.1.7.3
Hyperbaric facilities 20.2.7.3.11, A.20.2.7.3.11.1
Isolation switch, bypass 4.4.2.1.7
Test 4.4.2.1.4.11
Synthetic materials .....*see* Textiles

-T-

Task illumination (definition) 3.3.176
Telephones 10.2.10.1
Temperature
Anesthetizing locations 6.4.1.5, A.20.2.4.3.2, E.3.5.4
Generator sets and 4.4.1.1.11
Hazardous 8.4.2.2.2.2
Hyperbaric chambers 20.2.4.3, 20.2.7.3.12, 20.3.2.1.7, A.20.2.7.3.12
Terminals
Definition 3.3.177, A.3.3.177
Inlets .....*see* Station inlets
Test equipment 4.3.3.1.5
Test logs 8.5.3.1.3
Test switches 4.4.2.1.4.11
Textiles
Combustible materials C.20.1.1.3.4
Flammable anesthetic locations, use of ..... E.6.6.9.5, E.6.6.10.4 to E.6.6.10.8, E.8.3
Textiles, electrostatic hazard 20.3.1.5.4, A.20.3.1.5.4, E.6.6.8.8
Thermal standards 10.2.6.1
Thorax (definition) C.9.2.19
Tissue processors 11.4.2.1, A.11.4.2.1
Total hazard current .....*see* Hazard current, total
Toxicity
Anesthetizing locations C.13.1.2.2
Electrical equipment, surfaces of 10.2.6.2
Oxygen .....*see* Oxygen, toxicity
Products of combustion B.4.2
Respiratory therapy B.6.2.2
Trachea (definition) C.9.2.20
Tracheotomy tube (definition) 3.3.178.2, A.3.3.178.2
Training, employee
Anesthetizing locations 13.4.1.2.10.4, C.13.4.6
Disasters 12.3.3.9
Electrical equipment 8.5.5, A.8.5.5.1
Gas equipment 9.6.2.1, 9.6.3.3.5
Gas systems, operation and management 9.7.1.2, 9.9.1.2
High-frequency equipment, use of D.5.2
Hyperbaric facilities ..... 20.3.1.4.3 to 20.3.1.4.5, 20.3.6.4.1, A.20.3.1.4.4.1, A.20.3.1.4.5
Laboratories 11.2.1.4, 11.8.1.1.3, A.11.2.1.4.3
Respiratory therapy C.9.3.6
Transfer switches ..... 4.4.2.1, A.4.4.2.1.4, A.4.4.2.1.7.3; *see also* Switches
Automatic 4.3.2.2.1.2, 4.4.2.1.3, 4.4.2.1.4, 4.4.3.2.5, A.4.4.2.1.4
Nonautomatic 4.4.2.1.4.15, 4.4.2.1.5, 4.4.2.1.6, 4.4.3.2.8, 4.5.3.2.7, A.4.4.2.1.4.15
Performance criteria and testing 4.4.3.2, 4.5.3.2, 4.5.4.1.1, 4.6.3.2, 4.6.3.3, 4.6.4.1.1
Transformer, isolation .....*see* Isolation transformer
Transurethral resection D.2.1.1.4
Trichloroethylene C.13.1.3.1.2
Tube .....*see* Endotracheal tube; Tracheotomy tube

-U-

Ultrasonic diathermy D.2.1.6
Ultrasonic nebulizer (definition) C.9.2.21
Unattended laboratory operation 11.2.1.1.3, 11.4.2.2, A.11.2.1.1.3, A.11.4.2.2.2
Definition 3.3.179, A.3.3.179
Units of measurement 1.5, A.1.5.1
Use point (definition) 3.3.180
Utility center (J box) (definition) 3.3.181, A.3.3.181

-V-

Vacuum indicators 5.1.8, 5.2.8, C.5.2.5, C.5.2.14
Vacuum pumps
Alarms 5.1.9.5, A.5.1.9.5
Level 1 systems ..... 5.1.3.6.2, 5.1.3.6.6.1 to 5.1.3.6.6.5
Level 3 systems 5.3.3.3.2.2, 5.3.3.3.7
Vacuum receivers 5.1.3.6.3
Vacuum systems, medical–surgical ..... Chap. 5
Alarms
Area ..... 5.1.9.3, A.5.1.9.3.4(1), Table A.5.1.9.3, C.5.1.7
Local 5.1.9.1, 5.1.9.5, A.5.1.9.5
Master .... 5.1.9.2, Table A.5.1.9.2, C.5.1.3, C.5.2.10 to C.5.2.13
Birthing centers 21.3.5
Definition 3.3.113
Exhaust 5.1.3.6.7, 5.3.3.6.4, A.5.3.3.6.4.8
Hazards of B.2.2
Hospitals ..... 13.3.5, A.13.3.5.1(3)(c)
Installers, qualification of 5.1.10.10.11, 5.1.10.10.12, 5.3.10.10.1
Labeling 5.1.13.2, 5.3.13.6
Level 1 ..... 5.1.3.6, 5.1.9.2, 5.1.9.3, 5.1.10.2, 5.1.12, 5.1.13.1.4, 5.1.13.1.5, 5.1.13.2, A.5.1.3.6, A.5.1.5, A.5.1.9.2, A.5.1.9.3, A.5.1.9.5, A.5.1.12, C.5.1.3, C.5.2.10 to C.5.2.13
Conversion to gas system 5.1.10.10.10.2
Definition 3.3.91
Designation colors ..... Table 5.1.11
Electrical power and control 5.1.3.6.6
Maintenance ..... 5.3.13.7, 9.8, A.9.8.7(3), A.9.8.9
Operating pressures ..... Table 5.1.11
Piping 5.1.3.6.5, 5.1.10.2
Record keeping ..... 5.3.13.7, 9.8, A.9.8.7(3), A.9.8.9
Shutoff valves 5.1.4.1
Standard designation colors and operating pressures ..... Table 5.1.11
Station outlets/inlets 5.1.5
Level 2 ..... 5.2.3.6
Level 3 ..... 5.3.3.6.4, 5.3.10.2, 5.3.12, 5.3.13.5, A.5.3.3.6.4.8, A.5.3.12.3.10(3)(b)
Definition 3.3.95, A.3.3.95
Drains 5.3.3.6.3, A.5.3.3.6.3
Piping 5.3.10.2
Testing 5.3.12.4
Limited care facilities ..... 18.3.5, A.18.3.5.1(3)(c)
Manufactured assemblies to use with .....*see* Manufactured assemblies
Nursing homes ..... 17.3.5, A.17.3.5.1(3)(c)
Other health care facilities ..... 14.3.5, A.14.3.5.1(3)(c)

--`,,```,,,,````-`-`,,`,,`,`,,`---
Copyright National Fire Protection Association
Provided by IHS under license with NFPA
No reproduction or networking permitted without license from IHS
Not for Resale

Piping
Laboratories 11.11.3, A.11.11.3.2
Level 1 systems 5.1.3.6.5, 5.1.10.2
Level 3 systems 5.3.10.2
Special precautions 5.1.13.1.4, 5.1.13.1.5, 5.3.13.5
Tests .....*see also* Cross-connection test
Final standing vacuum test 5.3.12.4.3
Initial leak tests 5.3.12.2.4
Initial pressure test 5.3.12.2.3
Initial standing vacuum test 5.3.12.2.8
Standing vacuum test 5.1.12.2.7
Vacuum terminals .....*see* Station inlets
Valves .....*see also specific type, such as* Shutoff valves
Gas equipment, cylinder and container sources for ... 9.3.1, 9.3.3
Level 1 ..... 5.1.4, 5.1.12.3.4, A.5.1.4, Fig. A.5.1.4, C.5.2.17
Level 2 ..... 5.2.4
Level 3 ..... 5.3.3.4.2, 5.3.4, 5.3.10.1.1, 5.3.11.2, A.5.3.4
Vaporizers 5.1.3.4.13.10, 9.8.2
Definition 3.3.182
Ventilation .....*see also* Exhaust systems
Anesthetizing locations 6.4.1, 6.6.1, 13.4.1.2.1, A.6.4.1.1, E.3
Biological safety cabinets 6.4.3.1, A.6.4.3.1
Central supply systems and storage, gas 5.1.3.3.3
Definition C.9.2.22
Electrical heating equipment 8.4.2.2.2.3
Enclosures, medical gas systems 5.3.3.3.6
Flammable inhalation anesthetic agents ..... E. 3
Fume hoods 6.4.3, 6.6.2, A.6.4.3.1, A.6.4.3.3, A.6.4.3.4, A.6.6.2
Generator sets 4.4.1.1.12, A.4.4.1.1.12.1
Hyperbaric chambers 20.2.4, 20.2.9.2, A.20.2.4.1.2, A.20.2.4.2.1, A.20.2.4.3.2
Laboratories .....*see* Laboratories
Manifolds, locations for 5.1.3.3.3.1
Recirculation of air 6.3
Storage cabinets 11.7.2.4, A.11.7.2.3
Ventilator (definition) C.9.2.23
Venting .....*see* Ventilation
Voltage limit 4.3.3.1.6.1
Voltages
Abnormal ..... 4.4.1.1.1.2(1), 4.4.1.1.2
Measuring 4.3.3.1.3, A.4.3.3.1.3
Voltage sensing ..... 4.4.2.1.4(D)

-W-

Warning signs .....*see* Labeling and identification
Warning systems .....*see* Alarm systems
Waste anesthetic gas disposal (WAGD) systems ..... 5.1.3.4(6)
Alarms 5.1.3.7.4
Area ..... 5.1.9.3, A.5.1.9.3.4(1) and (2), Table A.5.1.9.3
Local 5.1.9.5, A.5.1.9.5
Anesthetizing locations 6.4.1.6
Definition 3.3.184
Designation colors ..... Table 5.1.11
Electrical power and control 5.1.3.7.5
Exhaust 5.1.3.7.6
Hazards of B.2.3
Hospitals 13.3.5.2
Interface (definition) 3.3.183, A.3.3.183
Joints in 5.1.10.9
Level 1 piped gas and vacuum systems ..... 5.1.3.3.1.3(3), 5.1.3.7, 5.1.12, A.5.1.3.7, A.5.1.12
Level 2 piped gas and vacuum systems 5.2.3.7
Maintenance program ..... 9.8.7(4)
Operating pressures ..... Table 5.1.11
Other health care facilities ..... 14.3.5.1, A.14.3.5.1(3)(c)
Producers 5.1.3.7.2
Sources 5.1.3.7.1, A.5.1.3.7.1
Water as extinguishing agent C.9.3.4.1, C.13.3.4.1, C.13.4.4.3
Water handlines .....*see* Handlines, water
Wet locations ..... 4.3.2.2.8, 13.2.4(3), A.4.3.2.2.8.1, B.5.2.2
Definition 3.3.185, A.3.3.185
Electrical appliances, testing of 8.5.2.1.2.2
Wiring .....*see* Electrical wiring
Working pressure .....*see* Pressure, working
Work space or room (generators) 4.4.1.1.8

-X-

X-ray equipment 13.4.1.2.6.2
Anesthetizing locations E.4.6.3, E.6.6.9.4
Hyperbaric facilities ..... 20.3.2.1.2(1)

-Z-

Zone valves 5.1.4.8

Copyright National Fire Protection Association
Provided by IHS under license with NFPA
No reproduction or networking permitted without license from IHS
Not for Resale

Sequence of Events Leading to Publication of an NFPA Committee Document

Call goes out for proposals to amend existing document or for recommendations on new document.

▼

Committee meets to act on proposals, to develop its own proposals, and to prepare its report.

▼

Committee votes on proposals by letter ballot. If two-thirds approve, report goes forward. Lacking two-thirds approval, report returns to committee.

▼

Report — *Report on Proposals* (ROP) — is published for public review and comment.

▼

Committee meets to act on each public comment received.

▼

Committee votes on comments by letter ballot. If two-thirds approve, supplementary report goes forward. Lacking two-thirds approval, supplementary report returns to committee.

▼

Supplementary report — *Report on Comments* (ROC) — is published for public review.

▼

NFPA membership meets (Annual or Fall Meeting) and acts on committee report (ROP or ROC).

▼

Committee votes on any amendments to report approved at NFPA Annual or Fall Meeting.

▼

Appeals to Standards Council on Association action must be filed within 20 days of the NFPA Annual or Fall Meeting.

▼

Standards Council decides, based on all evidence, whether or not to issue standard or to take other action, including upholding any appeals.

Committee Membership Classifications

The following classifications apply to Technical Committee members and represent their principal interest in the activity of the committee.

M *Manufacturer:* A representative of a maker or marketer of a product, assembly, or system, or portion thereof, that is affected by the standard.

U *User:* A representative of an entity that is subject to the provisions of the standard or that voluntarily uses the standard.

I/M *Installer/Maintainer:* A representative of an entity that is in the business of installing or maintaining a product, assembly, or system affected by the standard.

L *Labor:* A labor representative or employee concerned with safety in the workplace.

R/T *Applied Research/Testing Laboratory:* A representative of an independent testing laboratory or independent applied research organization that promulgates and/or enforces standards.

E *Enforcing Authority:* A representative of an agency or an organization that promulgates and/or enforces standards.

I *Insurance:* A representative of an insurance company, broker, agent, bureau, or inspection agency.

C *Consumer:* A person who is, or represents, the ultimate purchaser of a product, system, or service affected by the standard, but who is not included in the *User* classification.

SE *Special Expert:* A person not representing any of the previous classifications, but who has a special expertise in the scope of the standard or portion thereof.

NOTES:

1. "Standard" connotes code, standard, recommended practice, or guide.
2. A representative includes an employee.
3. While these classifications will be used by the Standards Council to achieve a balance for Technical Committees, the Standards Council may determine that new classifications of members or unique interests need representation in order to foster the best possible committee deliberations on any project. In this connection, the Standards Council may make such appointments as it seems appropriate in the public interest, such as the classification of "Utilities" in the National Electrical Code Committee.
4. Representatives of subsidiaries of any group are generally considered to have the same classification as the parent organization.

Copyright National Fire Protection Association
Provided by IHS under license with NFPA
No reproduction or networking permitted without license from IHS
Not for Resale

NFPA Technical Committee Document Proposal Form

Note: All proposals must be received by 5:00 p.m. EST/EDST on the published proposal closing date.

For further information on the standards-making process, please contact Codes and Standards Administration at 617-984-7249. For technical assistance, please call NFPA at 617-770-3000.

FOR OFFICE USE ONLY
Log #: _____
Date Rec'd: _____

Please indicate in which format you wish to receive your ROP/ROC: ☐ **CD ROM** ☐ **paper** ☐ **download**
(Note: In choosing the download option you intend to view the ROP/ROC from our Website. No copy will be sent to you.)

Date 12/18/02 **Name** John B. Smith **Telephone** 617-555-1212
Company _____
Address 9 Seattle St. **City** Seattle **State** WA **Zip** 02255
Please indicate organization represented (if any) Fire Marshals Assn. of North America

1. **a) NFPA Document Title** National Fire Alarm Code
   b) NFPA No. & Edition NFPA 72, 2002 ed. **c) Section/Paragraph** 4.4.7.1.1
2. **Proposal Recommends:** *(check one)* ☐ **new text** ☐ **revised text** ☒ **deleted text**
3. **Proposal.** *(Include proposed new or revised wording, or identification of wording to be deleted.)* Note: Proposed text should be in legislative format, that is, use underscore to denote wording to be inserted (inserted wording) and strike-through to denote wording to be deleted (~~deleted wording~~). Delete exception.
4. **Statement of Problem and Substantiation for Proposal.** Note: State the problem that will be resolved by your recommendation. Give the specific reason for your proposal including copies of tests, research papers, fire experience, etc. If more than 200 words, it may be abstracted for publication. A properly installed and maintained system should be free of ground faults. The occurrence of one or more ground faults should be required to cause a "trouble" signal because it indicates a condition that could contribute to future malfunction of the system. Ground fault protection has been widely available on these systems for years and its cost is negligible. Requiring it on all systems will promote better installations, maintenance and reliability.
5. ☒ **This Proposal is Original Material.** Note: Original material is considered to be the submitter's own idea based on or as a result of his/her own experience, thought, or research and, to the best of his/her knowledge, is not copied from another source.

   ☐ **This Proposal is Not Original Material; Its Source** ***(if known)*** **is as Follows:** _____

Sample

I hereby grant the NFPA all and full rights in copyright to this proposal, and I understand that I acquire no rights in any publication of NFPA in which this proposal in this or another similar or analogous form is used.

Signature ***(Required)*** John B. Smith

PLEASE USE SEPARATE FORM FOR EACH PROPOSAL • NFPA FAX (617) 770-3500

Mail to: Secretary, Standards Council • NFPA • 1 Batterymarch Park • PO Box 9101 • Quincy, MA 02269-9101

--`,,```,,,,````-`-`,,`,,`,`,,`---

Copyright National Fire Protection Association
Provided by IHS under license with NFPA
No reproduction or networking permitted without license from IHS

Not for Resale

NFPA Technical Committee Document Proposal Form

Note: All proposals must be received by 5:00 p.m. EST/EDST on the published proposal closing date.

For further information on the standards-making process, please contact Codes and Standards Administration at 617-984-7249. For technical assistance, please call NFPA at 617-770-3000.

FOR OFFICE USE ONLY
Log #: _____
Date Rec'd: _____

Please indicate in which format you wish to receive your ROP/ROC: ☐ **CD ROM** ☐ **paper** ☐ **download**
(Note: In choosing the download option you intend to view the ROP/ROC from our Website. No copy will be sent to you.)

Date _____ **Name** _____ **Telephone** _____
Company _____
Address _____ **City** _____ **State** _____ **Zip** _____
Please indicate organization represented (if any) _____

1. **a) NFPA Document Title** _____
   b) NFPA No. & Edition _____ **c) Section/Paragraph** _____

2. **Proposal Recommends:** *(check one)* ☐ **new text** ☐ **revised text** ☐ **deleted text**

3. **Proposal.** *(Include proposed new or revised wording, or identification of wording to be deleted.)* Note: Proposed text should be in legislative format, that is, use underscore to denote wording to be inserted (inserted wording) and strike-through to denote wording to be deleted (~~deleted wording~~). _____

4. **Statement of Problem and Substantiation for Proposal.** Note: State the problem that will be resolved by your recommendation. Give the specific reason for your proposal including copies of tests, research papers, fire experience, etc. If more than 200 words, it may be abstracted for publication. _____

5. ☐ **This Proposal is Original Material.** Note: Original material is considered to be the submitter's own idea based on or as a result of his/her own experience, thought, or research and, to the best of his/her knowledge, is not copied from another source.

   ☐ **This Proposal is Not Original Material; Its Source *(if known)* is as Follows:** _____

I hereby grant the NFPA all and full rights in copyright to this proposal, and I understand that I acquire no rights in any publication of NFPA in which this proposal in this or another similar or analogous form is used.

Signature *(Required)* _____

PLEASE USE SEPARATE FORM FOR EACH PROPOSAL • NFPA FAX (617) 770-3500

Mail to: Secretary, Standards Council • NFPA • 1 Batterymarch Park • PO Box 9101 • Quincy, MA 02269-9101

Copyright National Fire Protection Association
Provided by IHS under license with NFPA
No reproduction or networking permitted without license from IHS
Not for Resale