NFPA® 96

Standard for Ventilation Control and Fire Protection of Commercial Cooking Operations

2008 Edition

NFPA, 1 Batterymarch Park, Quincy, MA 02169-7471
An International Codes and Standards Organization

Copyright National Fire Protection Association
Provided by IHS under license with NFPA
No reproduction or networking permitted without license from IHS
Not for Resale

IMPORTANT NOTICES AND DISCLAIMERS CONCERNING NFPA DOCUMENTS

NOTICE AND DISCLAIMER OF LIABILITY CONCERNING THE USE OF NFPA DOCUMENTS

NFPA codes, standards, recommended practices, and guides, of which the document contained herein is one, are developed through a consensus standards development process approved by the American National Standards Institute. This process brings together volunteers representing varied viewpoints and interests to achieve consensus on fire and other safety issues. While the NFPA administers the process and establishes rules to promote fairness in the development of consensus, it does not independently test, evaluate, or verify the accuracy of any information or the soundness of any judgments contained in its codes and standards.

The NFPA disclaims liability for any personal injury, property or other damages of any nature whatsoever, whether special, indirect, consequential or compensatory, directly or indirectly resulting from the publication, use of, or reliance on this document. The NFPA also makes no guaranty or warranty as to the accuracy or completeness of any information published herein.

In issuing and making this document available, the NFPA is not undertaking to render professional or other services for or on behalf of any person or entity. Nor is the NFPA undertaking to perform any duty owed by any person or entity to someone else. Anyone using this document should rely on his or her own independent judgment or, as appropriate, seek the advice of a competent professional in determining the exercise of reasonable care in any given circumstances.

The NFPA has no power, nor does it undertake, to police or enforce compliance with the contents of this document. Nor does the NFPA list, certify, test or inspect products, designs, or installations for compliance with this document. Any certification or other statement of compliance with the requirements of this document shall not be attributable to the NFPA and is solely the responsibility of the certifier or maker of the statement.

Copyright National Fire Protection Association
Provided by IHS under license with NFPA
No reproduction or networking permitted without license from IHS
Not for Resale

ADDITIONAL NOTICES AND DISCLAIMERS

Updating of NFPA Documents

Users of NFPA codes, standards, recommended practices, and guides should be aware that these documents may be superseded at any time by the issuance of new editions or may be amended from time to time through the issuance of Tentative Interim Amendments. An official NFPA document at any point in time consists of the current edition of the document together with any Tentative Interim Amendments and any Errata then in effect. In order to determine whether a given document is the current edition and whether it has been amended through the issuance of Tentative Interim Amendments or corrected through the issuance of Errata, consult appropriate NFPA publications such as the National Fire Codes® Subscription Service, visit the NFPA website at www.nfpa.org, or contact the NFPA at the address listed below.

Interpretations of NFPA Documents

A statement, written or oral, that is not processed in accordance with Section 6 of the Regulations Governing Committee Projects shall not be considered the official position of NFPA or any of its Committees and shall not be considered to be, nor be relied upon as, a Formal Interpretation.

Patents

The NFPA does not take any position with respect to the validity of any patent rights asserted in connection with any items which are mentioned in or are the subject of NFPA codes, standards, recommended practices, and guides, and the NFPA disclaims liability for the infringement of any patent resulting from the use of or reliance on these documents. Users of these documents are expressly advised that determination of the validity of any such patent rights, and the risk of infringement of such rights, is entirely their own responsibility.

NFPA adheres to applicable policies of the American National Standards Institute with respect to patents. For further information contact the NFPA at the address listed below.

Law and Regulations

Users of these documents should consult applicable federal, state, and local laws and regulations. NFPA does not, by the publication of its codes, standards, recommended practices, and guides, intend to urge action that is not in compliance with applicable laws, and these documents may not be construed as doing so.

Copyrights

This document is copyrighted by the NFPA. It is made available for a wide variety of both public and private uses. These include both use, by reference, in laws and regulations, and use in private self-regulation, standardization, and the promotion of safe practices and methods. By making this document available for use and adoption by public authorities and private users, the NFPA does not waive any rights in copyright to this document.

Use of NFPA documents for regulatory purposes should be accomplished through adoption by reference. The term "adoption by reference" means the citing of title, edition, and publishing information only. Any deletions, additions, and changes desired by the adopting authority should be noted separately in the adopting instrument. In order to assist NFPA in following the uses made of its documents, adopting authorities are requested to notify the NFPA (Attention: Secretary, Standards Council) in writing of such use. For technical assistance and questions concerning adoption of NFPA documents, contact NFPA at the address below.

For Further Information

All questions or other communications relating to NFPA codes, standards, recommended practices, and guides and all requests for information on NFPA procedures governing its codes and standards development process, including information on the procedures for requesting Formal Interpretations, for proposing Tentative Interim Amendments, and for proposing revisions to NFPA documents during regular revision cycles, should be sent to NFPA headquarters, addressed to the attention of the Secretary, Standards Council, NFPA, 1 Batterymarch Park, P.O. Box 9101, Quincy, MA 02269-9101.

For more information about NFPA, visit the NFPA website at www.nfpa.org.

Copyright National Fire Protection Association
Provided by IHS under license with NFPA
No reproduction or networking permitted without license from IHS
Not for Resale

Copyright © 2007 National Fire Protection Association®. All Rights Reserved.

NFPA® 96

Standard for

Ventilation Control and Fire Protection of Commercial Cooking Operations

2008 Edition

This edition of NFPA 96, *Standard for Ventilation Control and Fire Protection of Commercial Cooking Operations*, was prepared by the Technical Committee on Venting Systems for Cooking Appliances and acted on by NFPA at its June Association Technical Meeting held June 3–7, 2007, in Boston, MA. It was issued by the Standards Council on July 26, 2007, with an effective date of August 15, 2007, and supersedes all previous editions.

This edition of NFPA 96 was approved as an American National Standard on August 15, 2007.

Origin and Development of NFPA 96

The subject of the ventilation of restaurant-type cooking equipment was first considered by the NFPA Committee on Blower and Exhaust Systems, which developed material on ventilation of restaurant-type cooking equipment to be included in NFPA 91, *Standard for the Installation of Blower and Exhaust Systems for Dust, Stock, and Vapor Removal or Conveying*. That standard was adopted by the Association in 1946, and revisions were adopted in 1947 and 1949.

When the NFPA Committee on Chimneys and Heating Equipment was organized in 1955, the material on ventilation of restaurant cooking equipment in NFPA 91 was assigned to the new committee with the suggestion that it be revised and published as a separate standard. Since then, the standard has been published as NFPA 96. Editions prepared by the Committee on Chimneys and Heating Equipment were adopted by the Association in 1961, 1964, 1969, 1970, 1971, 1973, 1976, 1978, 1980, and 1984.

The Correlating Committee on Chimneys and Other Heat and Vapor Removal Equipment was discharged by the Standards Council in 1986. The Technical Committee that prepared the 1987 edition of NFPA 96 became known as the Technical Committee on Venting Systems for Cooking Appliances.

In the 1991 edition, clearance requirements to combustible material were revised and expanded, including appendix figures that illustrated examples. A new definition for *limited-combustible* was added to the standard, and an appendix table was included to show typical construction assemblies. Chapters 3 and 4 were totally revised.

In the 1994 edition, the Committee changed the name of the standard from *Standard for the Installation of Equipment for the Removal of Smoke and Grease-Laden Vapors from Commercial Cooking Equipment* to *Standard for Ventilation Control and Fire Protection of Commercial Cooking Operations*. The title change reflected other changes in the standard: two new chapters on recirculating systems and solid fuel cooking operations were added. A change to clearance and enclosure requirements in the 1994 edition allowed, for the first time, materials or products to be directly applied to a duct.

The Committee prepared a revision to the standard reporting to the 1996 Fall Meeting, which was returned to the Committee at the Technical Committee Reports Session.

The 1998 edition contained new definitions, minor revisions throughout, and a completely revised Chapter 7 on fire-extinguishing equipment.

The 2001 edition revised the document scope to clarify the application of the standard regarding residential-type cooking equipment. Further technical changes clarified requirements for duct installation, rooftop terminations, and fire protection equipment. The 2001 edition also contained a significant organizational and editorial revision based on the *Manual of Style for NFPA Technical Committee Documents*.

The 2004 edition added a chapter that addressed the requirements for downdraft appliance ventilation as well as clarifications of the requirements for cleaning and maintaining exhaust systems and diagrams detailing new arrangements for hoods with integrated supply air.

The 2008 edition provides clarification of the requirements for field-applied and factory-built grease duct enclosures. It also recognizes new technologies for venting, such as ultraviolet hoods and ventilating ceilings. New requirements were also added for documentation of exhaust system cleaning and maintenance.

NFPA and National Fire Protection Association are registered trademarks of the National Fire Protection Association, Quincy, Massachusetts, 02169.

Copyright National Fire Protection Association
Provided by IHS under license with NFPA
No reproduction or networking permitted without license from IHS
Not for Resale

Technical Committee on Venting Systems for Cooking Appliances

R. T. Leicht, *Chair*
State of Delaware, DE [E]
Rep. International Fire Marshals Association

Gary G. Hopson, *Secretary*
Aon Risk Services, MI [I]

Phil Ackland, Phillip Ackland Holdings Ltd., Canada [SE]
Bernard P. Besal, Besal Services, Inc., GA [IM]
Rep. International Kitchen Exhaust Cleaning Association
David R. Bouchard, Fire Consulting Associates Inc., RI [SE]
Lawrence J. Capalbo, Flame Gard, Inc., CA [M]
Laurence W. Caraway, Jr., Kitchen Klean Inc., NH [IM]
Russell Clark, Certified Hood & Duct Cleaners Association, TN [IM]
Mark De Lorenzo, Randell Manufacturing, Inc., MI [M]
David P. Demers, Demers Associates Inc., MA [SE]
Lee C. DeVito, FIREPRO Incorporated, MA [SE]
Mark H. Finck, Burger King Corporation, FL [U]
Rod Getz, Getz Fire Equipment, IL [IM]
Rep. National Association of Fire Equipment Distributors
Charles H. Gibbons, Jr., Lampert-Lee & Associates, WI [SE]
Donald L. Griffes, NEVTEC Ltd., VT [M]
Edward J. Hard, Abco Fire Protection, OH [IM]
Fred E. Kahn, Guardian Power Cleaning of Dallas, Inc., TX [IM]
Rep. Air Conditioning Contractors of America
William Klingenmaier, Tyco Suppression Systems, WI [M]
Rep. Fire Equipment Manufacturers' Association
Francis J. Kohout, McDonald's Corporation, IL [U]
John J. Laudun, Louisiana State Fire Marshal's Office, LA [E]
Steven F. Levin, CNA Insurance Company, IL [I]
Roy A. Meacham, Underwriters Laboratories Inc., WA [RT]
Philip O. Morton, Gaylord Industries Inc., OR [M]
Shaun Ray, Metal-Fab, Inc., KS [M]
Rep. Gas Appliance Manufacturers Association Inc.
M. D. "Doc" Reisman, National Fire Services, IL [IM]
Rep. Power Washers of North America
John G. Richards, U.S. Department of Veterans Affairs, AP [U]
Harry Schildkraut, Schildkraut, Schroeder, Sedej & Associates, Inc., IL [SE]
Rep. Foodservice Consultants Society International
Christopher R. Schulz, Van-Packer Company, Inc., IL [M]
James F. Valentine, Jr., James F. Valentine, Jr., Inc., NJ [SE]

Alternates

W. Nelson Dilg, Nelbud Services Group, NJ [IM]
(Alt. to B. P. Besal)
Glen A. Edgar, Selkirk, LLC, OH [M]
(Alt. to S. Ray)
Jason Greenberg, McDonald's USA, LLC, IL [U]
(Alt. to F. J. Kohout)
Leonard E. Griffes, NEVTEC Ltd., VT [M]
(Alt. to D. L. Griffes)
Richard Kukla, Robert Rippe & Associates, MN [SE]
(Alt. to H. Schildkraut)
Norbert W. Makowka, National Association of Fire Equipment Distributors, IL [IM]
(Alt. to R. Getz)
John W. Rudd, Delaware State Fire Marshal Office, DE [E]
(Alt. to R. T. Leicht)
Emmanuel A. Sopeju, Underwriters' Laboratories of Canada, Canada [RT]
(Alt. to R. A. Meacham)
Laurie K. Szumla, Kidde/Badger Fire Protection, NY [M]
(Alt. to W. Klingenmaier)
A. Elwood Willey, FIREPRO Incorporated, MA [SE]
(Alt. to L. C. DeVito)

James D. Lake, NFPA Staff Liaison

This list represents the membership at the time the Committee was balloted on the final text of this edition. Since that time, changes in the membership may have occurred. A key to classifications is found at the back of the document.

NOTE: Membership on a committee shall not in and of itself constitute an endorsement of the Association or any document developed by the committee on which the member serves.

Committee Scope: This Committee shall have primary responsibility for documents on fire safety in the design, installation, and use of exhaust systems (including hoods, grease removal devices, exhaust ducts, dampers, air-moving devices, and auxiliary equipment) for the removal of products of combustion, heat, grease, and vapors from cooking equipment, including the application of associated fire extinguishing systems.

--`,,```,,,,````-`-`,,`,,`,`,,`---

Copyright National Fire Protection Association
Provided by IHS under license with NFPA
No reproduction or networking permitted without license from IHS
Not for Resale

Contents

Chapter 1 Administration **96–** 5
1.1 Scope **96–** 5
1.2 Purpose **96–** 5
1.3 Application **96–** 5
1.4 Retroactivity **96–** 5
1.5 Equivalency **96–** 5

Chapter 2 Referenced Publications **96–** 5
2.1 General **96–** 5
2.2 NFPA Publications **96–** 5
2.3 Other Publications **96–** 6
2.4 References for Extracts in Mandatory Sections **96–** 6

Chapter 3 Definitions **96–** 6
3.1 General **96–** 6
3.2 NFPA Official Definitions **96–** 6
3.3 General Definitions **96–** 6

Chapter 4 General Requirements **96–** 9
4.1 General **96–** 9
4.2 Clearance **96–** 9
4.3 Field-Applied and Factory-Built Grease Duct Enclosures **96–** 9
4.4 Building and Structural Duct Contact **96–**10
4.5 Duct Clearances to Enclosures **96–**10
4.6 Drawings **96–**10
4.7 Authority Having Jurisdiction Notification **96–**10

Chapter 5 Hoods **96–**10
5.1 Construction **96–**10
5.2 Hood Size **96–**10
5.3 Exhaust Hood Assemblies with Integrated Supply Air Plenums **96–**11
5.4 Listed Hood Assemblies **96–**11
5.5 Listed Ultraviolet Hoods **96–**11
5.6 Listed Ventilated Ceiling Technology **96–**11

Chapter 6 Grease Removal Devices in Hoods **96–**11
6.1 Grease Removal Devices **96–**11
6.2 Installation **96–**11

Chapter 7 Exhaust Duct Systems **96–**12
7.1 General **96–**12
7.2 Clearance **96–**12
7.3 Openings **96–**12
7.4 Openings in Ducts **96–**12
7.5 Other Grease Ducts **96–**13
7.6 Exterior Installations **96–**14
7.7 Interior Installations **96–**14
7.8 Termination of Exhaust System **96–**15

Chapter 8 Air Movement **96–**16
8.1 Exhaust Fans for Commercial Cooking Equipment **96–**16
8.2 Airflow **96–**17
8.3 Replacement Air **96–**18
8.4 Common Duct (Manifold) Systems **96–**18

Chapter 9 Auxiliary Equipment **96–**18
9.1 Dampers **96–**18
9.2 Electrical Equipment **96–**18
9.3 Other Equipment **96–**18

Chapter 10 Fire-Extinguishing Equipment **96–**19
10.1 General Requirements **96–**19
10.2 Types of Equipment **96–**19
10.3 Simultaneous Operation **96–**20
10.4 Fuel Shutoff **96–**20
10.5 Manual Activation **96–**20
10.6 System Annunciation **96–**20
10.7 System Supervision **96–**20
10.8 Special Design and Application **96–**20
10.9 Review and Certification **96–**20
10.10 Portable Fire Extinguishers **96–**21

Chapter 11 Procedures for the Use and Maintenance of Equipment **96–**21
11.1 Operating Procedures **96–**21
11.2 Inspection of Fire-Extinguishing Systems **96–**21
11.3 Inspection of Fire Dampers. **96–**21
11.4 Inspection for Grease Buildup **96–**21
11.5 Inspection and Maintenance of Listed Hoods Containing Mechanical, Water Spray, or Ultraviolet Devices **96–**21
11.6 Cleaning of Exhaust Systems **96–**21
11.7 Cooking Equipment Maintenance **96–**22

Chapter 12 Minimum Safety Requirements for Cooking Equipment **96–**22
12.1 Cooking Equipment **96–**22
12.2 Operating Controls **96–**22

Chapter 13 Recirculating Systems **96–**23
13.1 General Requirements **96–**23
13.2 Design Restrictions **96–**23
13.3 Interlocks **96–**23
13.4 Location and Application Restrictions **96–**23
13.5 Additional Fire Safety Requirements **96–**23
13.6 Use and Maintenance **96–**24

Chapter 14 Solid Fuel Cooking Operations **96–**24
14.1 Venting Application **96–**24
14.2 Location of Appliances **96–**24
14.3 Hoods for Solid Fuel Cooking **96–**24

Copyright National Fire Protection Association
Provided by IHS under license with NFPA
No reproduction or networking permitted without license from IHS
Not for Resale

14.4 Exhaust for Solid Fuel Cooking 96–24
14.5 Grease Removal Devices for Solid Fuel Cooking 96–24
14.6 Air Movement for Solid Fuel Cooking 96–25
14.7 Fire-Extinguishing Equipment for Solid Fuel Cooking 96–25
14.8 Procedures for Inspection, Cleaning, and Maintenance for Solid Fuel Cooking 96–25
14.9 Minimum Safety Requirements: Fuel Storage, Handling, and Ash Removal for Solid Fuel Cooking 96–25

Chapter 15 Down Draft Appliance Ventilation Systems 96–27
15.1 General Requirements 96–27
15.2 Fire-Extinguishing Equipment 96–27
15.3 Airflow Switch or Transducer 96–27
15.4 Surface Materials 96–27

Annex A Explanatory Material 96–27

Annex B Informational References 96–36

Index 96–37

Copyright National Fire Protection Association
Provided by IHS under license with NFPA
No reproduction or networking permitted without license from IHS
Not for Resale

NFPA 96

Standard for

Ventilation Control and Fire Protection of Commercial Cooking Operations

2008 Edition

IMPORTANT NOTE: This NFPA document is made available for use subject to important notices and legal disclaimers. These notices and disclaimers appear in all publications containing this document and may be found under the heading "Important Notices and Disclaimers Concerning NFPA Documents." They can also be obtained on request from NFPA or viewed at www.nfpa.org/disclaimers.

NOTICE: An asterisk (*) following the number or letter designating a paragraph indicates that explanatory material on the paragraph can be found in Annex A.

Changes other than editorial are indicated by a vertical rule beside the paragraph, table, or figure in which the change occurred. These rules are included as an aid to the user in identifying changes from the previous edition. Where one or more complete paragraphs have been deleted, the deletion is indicated by a bullet (•) between the paragraphs that remain.

A reference in brackets [ ] following a section or paragraph indicates material that has been extracted from another NFPA document. As an aid to the user, the complete title and edition of the source documents for extracts in mandatory sections of the document are given in Chapter 2 and those for extracts in informational sections are given in Annex B. Editorial changes to extracted material consist of revising references to an appropriate division in this document or the inclusion of the document number with the division number when the reference is to the original document. Requests for interpretations or revisions of extracted text shall be sent to the technical committee responsible for the source document.

Information on referenced publications can be found in Chapter 2 and Annex B.

Chapter 1 Administration

1.1 Scope.

1.1.1* This standard shall provide the minimum fire safety requirements (preventative and operative) related to the design, installation, operation, inspection, and maintenance of all public and private cooking operations.

1.1.2 This standard shall apply to residential cooking equipment used for commercial cooking operations.

1.1.3 This standard shall not apply to cooking equipment located in a single dwelling unit.

1.1.4* This standard shall not apply to facilities where all of the following are met:

(1) Only residential equipment is being used.
(2) Fire extinguishers are located in all kitchen areas in accordance with NFPA 10, *Standard for Portable Fire Extinguishers.*
(3) Facility is not an assembly occupancy.
(4) The authority having jurisdiction has approved the installation.

1.2 Purpose. The purpose of this standard shall be to reduce the potential fire hazard of cooking operations, irrespective of the type of cooking equipment used and whether used in public or private facilities.

1.3 Application.

1.3.1* This standard shall be applied as a united whole.

1.3.2 The authority having jurisdiction shall determine compliance with this standard and authorize equivalent deviations from it in all applications.

1.4 Retroactivity. The provisions of this standard reflect a consensus of what is necessary to provide an acceptable degree of protection from the hazards addressed in this standard at the time the standard was issued.

1.4.1 Unless otherwise specified, the provisions of this standard shall not apply to facilities, equipment, structures, or installations that existed or were approved for construction or installation prior to the effective date of the standard. Where specified, the provisions of this standard shall be retroactive.

1.4.2 In those cases where the authority having jurisdiction determines that the existing situation presents an unacceptable degree of risk, the authority having jurisdiction shall be permitted to apply retroactively any portions of this standard deemed appropriate.

1.4.3 The retroactive requirements of this standard shall be permitted to be modified if their application clearly would be impractical in the judgment of the authority having jurisdiction and only where it is clearly evident that a reasonable degree of safety is provided.

1.5 Equivalency. Nothing in this standard is intended to prevent the use of systems, methods, or devices of equivalent or superior quality, strength, fire resistance, effectiveness, durability, and safety over those prescribed by this standard.

1.5.1 Technical documentation shall be submitted to the authority having jurisdiction to demonstrate equivalency.

1.5.2 The system, method, or device shall be approved for the intended purpose by the authority having jurisdiction.

Chapter 2 Referenced Publications

2.1 General. The documents or portions thereof listed in this chapter are referenced within this standard and shall be considered part of the requirements of this document.

2.2 NFPA Publications. National Fire Protection Association, 1 Batterymarch Park, Quincy, MA 02169-7471.

NFPA 10, *Standard for Portable Fire Extinguishers,* 2007 edition.

NFPA 12, *Standard on Carbon Dioxide Extinguishing Systems,* 2008 edition.

NFPA 13, *Standard for the Installation of Sprinkler Systems,* 2007 edition.

NFPA 17, *Standard for Dry Chemical Extinguishing Systems,* 2002 edition.

NFPA 17A, *Standard for Wet Chemical Extinguishing Systems,* 2002 edition.

NFPA 54, *National Fuel Gas Code,* 2006 edition.

NFPA 58, *Liquefied Petroleum Gas Code,* 2008 edition.

NFPA 70, *National Electrical Code®,* 2008 edition.

Copyright National Fire Protection Association
Provided by IHS under license with NFPA
No reproduction or networking permitted without license from IHS
Not for Resale

NFPA 80, *Standard for Fire Doors and Other Opening Protectives,* 2007 edition.

NFPA 211, *Standard for Chimneys, Fireplaces, Vents, and Solid Fuel–Burning Appliances,* 2006 edition.

NFPA 251, *Standard Methods of Tests of Fire Resistance of Building Construction and Materials,* 2006 edition.

NFPA 259, *Standard Test Method for Potential Heat of Building Materials,* 2008 edition.

2.3 Other Publications.

2.3.1 ASTM Publications. ASTM International, 100 Barr Harbor Drive, P.O. Box C700, West Conshohocken, PA 19428-2959.

ASTM E 814, *Standard Test Method for Fire Tests of Through-Penetration Fire Stops*, 2006.

ASTM E 2336, *Standard Test Methods for Fire Resistive Grease Duct Enclosure Systems*, 2004.

2.3.2 EPA Publication. Environmental Protection Agency (EPA), Crystal Station, 2800 Crystal Drive, Arlington, VA 22202.

EPA Test Method 202, *Determination of Condensable Particulate Emissions for Stationary Sources.*

2.3.3 UL Publications. Underwriters Laboratories Inc., 333 Pfingsten Road, Northbrook, IL 60062-2096.

UL 197, *Standard for Commercial Electric Cooking Appliances*, 1993.

UL 300, *Standard for Fire Testing of Fire Extinguishing Systems for Protection of Restaurant Cooking Areas*, 1996.

UL 710, *Standard for Exhaust Hoods for Commercial Cooking Equipment*, 1995.

UL 710B, *Outline of Investigation for Recirculating Exhaust System,*, 2003.

UL 723, *Standard for Test for Surface Burning Characteristics of Building Materials*, 2001.

UL 1046, *Standard for Grease Filters for Exhaust Ducts*, 2000.

UL 1479, *Standard for Fire Tests of Through-Penetration Firestops*, 2003.

UL 1978, *Standard for Safety for Grease Ducts*, 2002.

UL 2221, *Standard for Tests of Fire Resistive Grease Duct Enclosure Assemblies*, 2001.

2.3.4 Other Publications.

Merriam-Webster's Collegiate Dictionary, 11th edition, Merriam-Webster, Inc., Springfield, MA, 2003.

2.4 References for Extracts in Mandatory Sections.

NFPA 80, *Standard for Fire Doors and Other Opening Protectives,* 2007 edition.

NFPA *101®*, *Life Safety Code®*, 2006 edition.

NFPA 150, *Standard on Fire and Life Safety in Animal Housing Facilities,* 2007 edition.

NFPA 211, *Standard for Chimneys, Fireplaces, Vents, and Solid Fuel–Burning Appliances,* 2006 edition.

NFPA 5000®, *Building Construction and Safety Code®*, 2006 edition.

Chapter 3 Definitions

3.1 General. The definitions contained in this chapter shall apply to the terms used in this standard. Where terms are not defined in this chapter or within another chapter, they shall be defined using their ordinarily accepted meanings within the context in which they are used. *Merriam-Webster's Collegiate Dictionary*, 11th edition, shall be the source for the ordinarily accepted meaning.

3.2 NFPA Official Definitions.

3.2.1* Approved. Acceptable to the authority having jurisdiction.

3.2.2* Authority Having Jurisdiction (AHJ). An organization, office, or individual responsible for enforcing the requirements of a code or standard, or for approving equipment, materials, an installation, or a procedure.

3.2.3 Labeled. Equipment or materials to which has been attached a label, symbol, or other identifying mark of an organization that is acceptable to the authority having jurisdiction and concerned with product evaluation, that maintains periodic inspection of production of labeled equipment or materials, and by whose labeling the manufacturer indicates compliance with appropriate standards or performance in a specified manner.

3.2.4* Listed. Equipment, materials, or services included in a list published by an organization that is acceptable to the authority having jurisdiction and concerned with evaluation of products or services, that maintains periodic inspection of production of listed equipment or materials or periodic evaluation of services, and whose listing states that either the equipment, material, or service meets appropriate designated standards or has been tested and found suitable for a specified purpose.

3.2.5 Shall. Indicates a mandatory requirement.

3.2.6 Should. Indicates a recommendation or that which is advised but not required.

3.2.7 Standard. A document, the main text of which contains only mandatory provisions using the word "shall" to indicate requirements and which is in a form generally suitable for mandatory reference by another standard or code or for adoption into law. Nonmandatory provisions shall be located in an appendix or annex, footnote, or fine-print note and are not to be considered a part of the requirements of a standard.

3.3 General Definitions.

3.3.1 Access Panel. A closure device used to cover an opening into a duct, an enclosure, equipment, or an appurtenance.

3.3.2 Air Intakes. An opening in a building's envelope whose purpose is to allow outside air to be drawn into the structure to replace inside air that is removed by exhaust systems or to improve the quality of the inside air by providing a source of air having a lower concentration of odors, suspended particles, or heating content.

3.3.3 Air Pollution Control Devices. Equipment and devices used for the purpose of cleaning air passing through them or by them in such a manner as to reduce or remove the impurities contained therein.

Copyright National Fire Protection Association
Provided by IHS under license with NFPA
No reproduction or networking permitted without license from IHS
Not for Resale

3.3.4* Appliance Flue Outlet. The opening or openings in a cooking device where vapors, combustion gases, or both leave the cooking device.

3.3.5 Appurtenance. An accessory or a subordinate part that enables the primary device to perform or improves its intended function.

3.3.6 Automatic. That which provides a function without the necessity of human intervention. [***101,*** 2006]

3.3.7 Baffle Plate. An object placed in or near an appliance to change the direction, or to retard the flow, of air, air–fuel mixtures, or flue gases.

3.3.8 Broiler.

3.3.8.1 ***High Broiler.*** See 3.3.8.3, Upright Broiler.

3.3.8.2 ***Salamander Broiler.*** See 3.3.8.3, Upright Broiler.

3.3.8.3 ***Upright Broiler.*** An appliance used in the preparation of food whereby foods are exposed to intense radiant heat, and perhaps to convective heat, with the food or the food and the radiant source not limited to a horizontal mode.

3.3.9* Certified. A formally stated recognition and approval of an acceptable level of competency, acceptable to the AHJ.

3.3.10 Classified. Products or materials of a specific group category that are constructed, inspected, tested, and subsequently reinspected in accordance with an established set of requirements. The classification process is performed by an organization acceptable to the authority having jurisdiction. [**80,** 2007]

3.3.11 Clean(ing). For kitchen exhaust systems and cooking equipment, the act of removing grease, oil deposits, and other residue.

3.3.12 Clearly Identified. Capable of being recognized by a person of normal vision without causing uncertainty and indecisiveness about the location or operating process of the identified item.

3.3.13* Construction.

3.3.13.1 ***Closed Combustible Construction.*** Combustible building construction, including walls, structural framing, roofs, roof ceilings, floors, and floor–ceiling assemblies, continuously enclosing a grease duct on four sides where one or more sides are protected.

3.3.13.2 ***Open Combustible Construction.*** Combustible building construction, including wall, structural framing, roof, roof ceiling, floor, and floor–ceiling assemblies, adjacent to a grease duct on three or fewer sides where one or more sides are protected.

3.3.14* Continuous Weld. A metal-joining method that produces a product without visible interruption or variation in quality.

3.3.15 Damper. A valve or plate for controlling draft or flow of gases, including air.

3.3.16 Detection Devices. Electrical, pneumatic, thermal, mechanical, or optical sensing instruments, or subcomponents of such instruments, whose purpose is to cause an automatic action upon the occurrence of some preselected event.

3.3.17 Dips. Depression or cuplike places in horizontal duct runs in which liquids could accumulate.

3.3.18 Discharge. The final portion of a duct or pipe where the product being conveyed is emptied or released from confinement; the termination point of the pipe or duct.

3.3.19 Duct Termination. The final or intended end-portion of a duct system that is designed and functions to fulfill the obligations of the system in a satisfactory manner.

3.3.20 Ducts (or Duct System). A continuous passageway for the transmission of air and vapors that, in addition to the containment components themselves, might include duct fittings, dampers, plenums, and/or other items or air-handling equipment.

3.3.20.1 ***Bleed Air Duct.*** An intake duct in a manifold duct system, designed to input air to maintain system balance.

3.3.20.2 ***Grease Ducts.*** A containment system for the transportation of air and grease vapors that is designed and installed to reduce the possibility of the accumulation of combustible condensation and the occurrence of damage if a fire occurs within the system.

3.3.21 Easily Accessible. Within comfortable reach, with limited dependence on mechanical devices, extensions, or assistance.

3.3.22 Enclosure.

3.3.22.1 ***Continuous Enclosure.*** A recognized architectural or mechanical component of a building having a fire resistance rating as required for the structure and whose purpose is to enclose the vapor removal duct for its full length to its termination point outside the structure without any portion of the enclosure having a fire resistance rating less than the required value.

3.3.22.2 ***Grease Duct Enclosure.***

3.3.22.2.1 ***Factory-Built Grease Duct Enclosure.*** A listed factory-built grease duct system evaluated as an enclosure system for reduced clearances to combustibles and as an alternative to a duct with its fire-rated enclosure.

3.3.22.2.2 ***Field-Applied Grease Duct Enclosure.*** A listed system evaluated for reduced clearances to combustibles and as an alternative to a duct with its fire-rated enclosure.

3.3.23 Equipment.

3.3.23.1 ***Fire-Extinguishing Equipment.*** Automatic fire-extinguishing systems and portable fire extinguishers provided for the protection of grease removal devices, hoods, duct systems, and cooking equipment, and listed for such use.

3.3.23.2* ***Solid Fuel Cooking Equipment.*** Cooking equipment that utilizes solid fuel.

3.3.24 Filter.

3.3.24.1* ***Grease Filter.*** A removable component of the grease removal system designed to capture grease and direct it to a safe collection point.

3.3.24.2* ***Mesh-Type Filter.*** A general purpose air filter not listed for or intended for grease applications.

3.3.25 Fire Resistance Rating. The time, in minutes or hours, that materials or assemblies have withstood a fire exposure as established in accordance with the test procedures of NFPA 251. [**150,** 2006]

Copyright National Fire Protection Association
Provided by IHS under license with NFPA
No reproduction or networking permitted without license from IHS
Not for Resale

3.3.26 Fire Wall. A wall separating buildings or subdividing a building to prevent the spread of the fire and having a fire resistance rating and structural stability.

3.3.27 Fume Incinerators. Devices utilizing intense heat or fire to break down and/or oxidize vapors and odors contained in gases or air being exhausted into the atmosphere.

3.3.28 Fusible Link. A form of fixed temperature heat detecting device sometimes employed to restrain the operation of an electrical or mechanical control until its designed temperature is reached.

3.3.29* Grease. Rendered animal fat, vegetable shortening, and other such oily matter used for the purposes of and resulting from cooking and/or preparing foods.

3.3.30 Grease Removal Devices. A system of components designed for and intended to process vapors, gases, and/or air as it is drawn through such devices by collecting the airborne grease particles and concentrating them for further action at some future time, leaving the exiting air with a lower amount of combustible matter.

3.3.31 Greasetight. Constructed and performing in such a manner as not to permit the passage of any grease under normal cooking conditions.

3.3.32 High Limit Control Device. An operating device installed and serving as an integral component of a deep fat fryer that provides secondary limitation of the grease temperature by automatically disconnecting the thermal energy input when the temperature limit is exceeded.

3.3.33* Hood. A device provided for a cooking appliance(s) to direct and capture grease-laden vapors and exhaust gases.

3.3.33.1 ***Fixed Baffle Hood.*** A listed unitary exhaust hood design where the grease removal device is a nonremovable assembly that contains an integral fire-activated water-wash fire-extinguishing system listed for this purpose.

3.3.34 Interconnected. Mutually assembled to another component in such a manner that the operation of one directly affects the other or that the contents of one specific duct system are allowed to encounter or contact the products being moved by another duct system.

3.3.35 Liquidtight. Constructed and performing in such a manner as not to permit the passage of any liquid at any temperature.

3.3.36* Material.

3.3.36.1 ***Combustible Material.*** Any material that will burn regardless of its autoignition temperature.

3.3.36.2 ***Limited-Combustible Material.*** Refers to a building construction material not complying with the definition of noncombustible material that, in the form in which it is used, has a potential heat value not exceeding 8141 kJ/kg (3500 Btu/lb), where tested in accordance with NFPA 259 and includes (1) materials having a structural base of noncombustible material, with a surfacing not exceeding a thickness of ⅛ in. (3.2 mm) that has a flame spread index not greater than 50; and (2) materials, in the form and thickness used, other than as described in (1), having neither a flame spread index greater than 25 nor evidence of continued progressive combustion, and of such composition that surfaces that would be exposed by cutting through the material on any plane would have neither a flame spread index greater than 25 nor evidence of continued progressive combustion. [***5000,*** 2006]

3.3.36.3* ***Noncombustible Material.*** A substance that will not ignite and burn when subjected to a fire.

3.3.37 Pitched. To be fixed or set at a desired angle or inclination.

3.3.38 Qualified. A competent and capable person or company that has met the requirements and training for a given field acceptable to the AHJ.

3.3.39 Recirculating Systems. Systems for control of smoke or grease-laden vapors from commercial cooking equipment that do not exhaust to the outside.

3.3.40 Removable. Capable of being transferred to another location with a limited application of effort and tools.

3.3.41 Replacement Air. Air deliberately brought into the structure, then specifically to the vicinity of either a combustion process or a mechanically or thermally forced exhausting device, to compensate for the vapor and/or gases being consumed or expelled.

3.3.42 Single Hazard Area. Where two or more hazards can be simultaneously involved in fire by reason of their proximity, as determined by the authority having jurisdiction.

3.3.43 Solid Cooking Fuel. Any solid, organic, consumable fuel such as briquettes, mesquite, hardwood, or charcoal.

3.3.44 Solvent. A substance (usually liquid) capable of dissolving or dispersing another substance; a chemical compound designed and used to convert solidified grease into a liquid or semiliquid state in order to facilitate a cleaning operation.

3.3.45 Space.

3.3.45.1 ***Concealed Spaces.*** That portion(s) of a building behind walls, over suspended ceilings, in pipe chases, attics, and whose size might normally range from 44.45 mm (1¾ in.) stud spaces to 2.44 m (8 ft) interstitial truss spaces and that might contain combustible materials such as building structural members, thermal and/or electrical insulation, and ducting.

3.3.45.2 ***Confined Space.*** A space whose volume is less than 1.42 m^3/293 W (50 ft^3/1000 Btu/hr) of the aggregate input rating of all appliances installed in that space. [**211,** 2006]

3.3.46 Spark Arrester. A device or method that minimizes the passage of airborne sparks and embers into a plenum, duct, and flue.

3.3.47 Thermal Recovery Unit. A device or series of devices whose purpose is to reclaim only the heat content of air, vapors, gases, or fluids that are being expelled through the exhaust system and to transfer the thermal energy so reclaimed to a location whereby a useful purpose can be served.

3.3.48* Trained. A person who has become proficient in performing a skill reliably and safely through instruction and practice/field experience acceptable to the AHJ.

3.3.49 Trap. A cuplike or U-shaped configuration located on the inside of a duct system component where liquids can accumulate.

Copyright National Fire Protection Association
Provided by IHS under license with NFPA
No reproduction or networking permitted without license from IHS
Not for Resale

Chapter 4 General Requirements

4.1 General.

4.1.1 Cooking equipment used in processes producing smoke or grease-laden vapors shall be equipped with an exhaust system that complies with all the equipment and performance requirements of this standard.

4.1.1.1* Cooking equipment that has been listed in accordance with UL 197 or an equivalent standard for reduced emissions shall not be required to be provided with an exhaust system.

4.1.1.2 The listing evaluation of cooking equipment covered by 4.1.1.1 shall demonstrate that the grease discharge at the exhaust duct of a test hood placed over the appliance shall not exceed 5 mg/m^3 when operated with a total airflow of 0.236 m^3/s (500 cfm).

4.1.2 All such equipment and its performance shall be maintained in accordance with the requirements of this standard during all periods of operation of the cooking equipment.

4.1.3 The following equipment shall be kept in working condition:

(1) Cooking equipment
(2) Hoods
(3) Ducts (if applicable)
(4) Fans
(5) Fire-extinguishing systems
(6) Special effluent or energy control equipment

4.1.3.1 Maintenance and repairs shall be performed on all components at intervals necessary to maintain good working condition.

4.1.4 All airflows shall be maintained.

4.1.5 The responsibility for inspection, maintenance, and cleanliness of the ventilation control and fire protection of the commercial cooking operations shall be the ultimate responsibility of the owner of the system provided that this responsibility has not been transferred in written form to a management company or other party.

4.1.6* All solid fuel cooking equipment shall comply with the requirements of Chapter 14.

4.1.7 Multi-tenant applications shall require the concerted cooperation of design, installation, operation, and maintenance responsibilities by tenants and by the building owner.

4.1.8 All interior surfaces of the exhaust system shall be accessible for cleaning and inspection purposes.

4.1.9* Cooking equipment used in fixed, mobile, or temporary concessions, such as trucks, buses, trailers, pavilions, tents, or any form of roofed enclosure, shall comply with this standard.

4.2* Clearance.

4.2.1 Where enclosures are not required, hoods, grease removal devices, exhaust fans, and ducts shall have a clearance of at least 457 mm (18 in.) to combustible material, 76 mm (3 in.) to limited-combustible material, and 0 mm (0 in.) to noncombustible material.

4.2.2 Where a hood, duct, or grease removal device is listed for clearances less than those required in 4.2.1, the listing requirements shall be permitted.

4.2.3 Clearance Reduction.

4.2.3.1 Where a clearance reduction system consisting of 0.33 mm (0.013 in.) (28 gauge) sheet metal spaced out 25 mm (1 in.) on noncombustible spacers is provided, there shall be a minimum of 229 mm (9 in.) clearance to combustible material.

4.2.3.2 Where a clearance reduction system consisting of 0.69 mm (0.027 in.) (22 gauge) sheet metal on 25 mm (1 in.) mineral wool batts or ceramic fiber blanket reinforced with wire mesh or equivalent spaced out 25 mm (1 in.) on noncombustible spacers is provided, there shall be a minimum of 76 mm (3 in.) clearance to combustible material.

4.2.3.3 Zero clearance to limited-combustible materials shall be permitted where protected by metal lath and plaster, ceramic tile, quarry tile, other noncombustible materials or assembly of noncombustible materials, or materials and products that are listed for the purpose of reducing clearance.

4.2.4 Clearance Integrity.

4.2.4.1 In the event of damage, the material or product shall be repaired and restored to meet its intended listing or clearance requirements and shall be acceptable to the authority having jurisdiction.

4.2.4.2* In the event of a fire within a kitchen exhaust system, the duct and its enclosure (rated shaft, factory-built grease duct enclosure, or field-applied grease duct enclosure) shall be inspected by qualified personnel to determine whether the duct and protection method are structurally sound, capable of maintaining their fire protection function, and in compliance with this standard for continued operation.

4.2.4.3 Protection shall be provided on the wall from the bottom of the hood to the floor, or to the top of the noncombustible material extending to the floor, to the same level as required in 4.2.1.

4.2.4.4 The protection methods for ducts to reduce clearance shall be applied to the combustible or limited-combustible construction, not to the duct itself.

4.3 Field-Applied and Factory-Built Grease Duct Enclosures.

4.3.1 Field-applied grease duct enclosures shall be protected with a through-penetration firestop system classified in accordance with ASTM E 814 or UL 1479 having an "F" and "T" rating equal to the fire resistance rating of the assembly being penetrated.

4.3.1.1 The surface of the field fabricated grease duct shall be continuously covered on all sides from the point at which the duct enclosure penetrates a ceiling, wall, or floor to the outlet terminal.

4.3.1.2 The field-applied grease duct shall be listed in accordance with ASTM E 2336, and installed in accordance with the manufacturer's instructions and the listing requirements.

4.3.2* Where subject to physical damage, field-applied grease duct enclosures shall be protected as deemed necessary by the authority having jurisdiction.

4.3.3 Factory-built grease duct enclosures shall be protected with a through-penetration firestop system classified in accordance with ASTM E 814 or UL 1479 having an "F" and "T" rating equal to the fire resistance rating of the assembly being penetrated from the point at which the duct penetrates a ceiling, wall, or floor to the outlet terminal.

Copyright National Fire Protection Association
Provided by IHS under license with NFPA
No reproduction or networking permitted without license from IHS
Not for Resale

4.3.3.1 The factory-built grease duct protection system shall be listed in accordance with UL 2221.

4.3.3.2 The factory-built grease duct protection system shall be installed in accordance with the manufacturer's instructions and the listing requirements.

4.3.4 Field-applied grease duct enclosures and factory-built grease duct enclosures shall demonstrate that they provide mechanical and structural integrity, resiliency, and stability when subjected to expected building environmental conditions, duct movement under general operating conditions, and duct movement due to fire conditions.

4.3.5 The specifications of material, gauge, and construction of the duct used in the testing and listing of field-applied grease duct enclosures and factory-built grease duct enclosures shall be included as minimum requirements in their listing and installation documentation.

4.3.6 Clearance Options for Field-Applied and Factory-Built Grease Duct Enclosures. The following clearance options for which field-applied grease duct enclosures and factory-built grease duct enclosures have been successfully evaluated shall be clearly identified in their listing and installation documentation and on their labels:

(1) Open combustible construction clearance at manufacturer's requested dimensions
(2) Closed combustible construction clearance at manufacturer's requested dimensions, with or without specified ventilation
(3) Rated shaft clearance at manufacturer's requested dimensions, with or without specified ventilation

4.4 Building and Structural Duct Contact.

4.4.1 A duct shall be permitted to contact noncombustible floors, interior walls, and other noncombustible structures or supports, but it shall not be in contact for more than 50 percent of its surface area for each linear foot of contact length.

4.4.2 Where duct contact must exceed the requirements of 4.4.1, the duct shall be protected from corrosion.

4.4.3 Where the duct is listed for zero clearance to combustibles or is otherwise protected with a material or product listed for the purpose of reducing clearance to zero, the duct shall be permitted to exceed the contact limits of 4.4.1 without additional corrosion protection.

4.4.4 Where the duct is listed for zero clearance to combustibles, the duct shall be permitted to exceed the contact limits of 4.4.1 without additional corrosion protection.

4.5 Duct Clearances to Enclosures. Clearances between the duct and interior surfaces of enclosures shall meet the requirements of Section 4.2.

4.6 Drawings. A drawing(s) of the exhaust system installation along with copies of operating instructions for subassemblies and components used in the exhaust system, including electrical schematics, shall be kept on the premises.

4.7 Authority Having Jurisdiction Notification. If required by the authority having jurisdiction, notification in writing shall be given of any alteration, replacement, or relocation of any exhaust or extinguishing system or part thereof or cooking equipment.

Chapter 5 Hoods

5.1 Construction.

5.1.1 The hood or that portion of a primary collection means designed for collecting cooking vapors and residues shall be constructed of and be supported by steel not less than 1.09 mm (0.043 in.) (No. 18 MSG) in thickness, stainless steel not less than 0.94 mm (0.037 in.) (No. 20 MSG) in thickness, or other approved material of equivalent strength and fire and corrosion resistance.

5.1.2 All seams, joints, and penetrations of the hood enclosure that direct and capture grease-laden vapors and exhaust gases shall have a liquidtight continuous external weld to the hood's lower outermost perimeter.

5.1.3 Seams, joints, and penetrations of the hood shall be permitted to be internally welded, provided that the weld is formed smooth or ground smooth, so as to not trap grease, and is cleanable.

5.1.4* Internal hood joints, seams, filter support frames, and appurtenances attached inside the hood shall be sealed or otherwise made greasetight.

5.1.5 Penetrations shall be permitted to be sealed by devices that are listed for such use and whose presence does not detract from the hood's or duct's structural integrity.

5.1.6 Listed exhaust hoods with or without exhaust dampers shall be permitted to be constructed of materials required by the listing.

5.1.7 Listed exhaust hoods with or without exhaust dampers shall be permitted to be assembled in accordance with the listing requirements.

5.1.8 Eyebrow-Type Hoods.

5.1.8.1 Eyebrow-type hoods over gas or electric ovens shall be permitted to have a duct constructed as required in Chapter 7 from the oven flue(s) connected to the hood canopy upstream of the exhaust plenum, as shown in Figure 5.1.8.1.

5.1.8.2 The duct connecting the oven flue(s) to the hood canopy shall be connected with a continuous weld or have a duct-to-duct connection. *[See Figure 8.1.2.2(b) through Figure 8.1.2.2(d).]*

5.1.9 Insulation materials other than electrical insulation shall have a flame spread rating of 25 or less when tested in accordance with UL 723.

5.1.10 Adhesives or cements used in the installation of insulating materials shall comply with the requirements of 5.1.9 when tested with the specific insulating material.

5.1.11 Penetrations shall be sealed with listed devices in accordance with the requirements of 5.1.12.

5.1.12 Devices that require penetration of the hood, such as pipe and conduit penetration fittings and fasteners, shall be listed in accordance with UL 1978.

5.1.13 Wall-mounted exhaust hood assemblies shall be tight fitting against the back wall so as to not permit passage of grease vapor behind the hood or between the back wall and the hood assembly.

5.2 Hood Size. Hoods shall be sized and configured to provide for the capture and removal of grease-laden vapors. *(See 8.2.2.)*

Copyright National Fire Protection Association
Provided by IHS under license with NFPA
No reproduction or networking permitted without license from IHS
Not for Resale

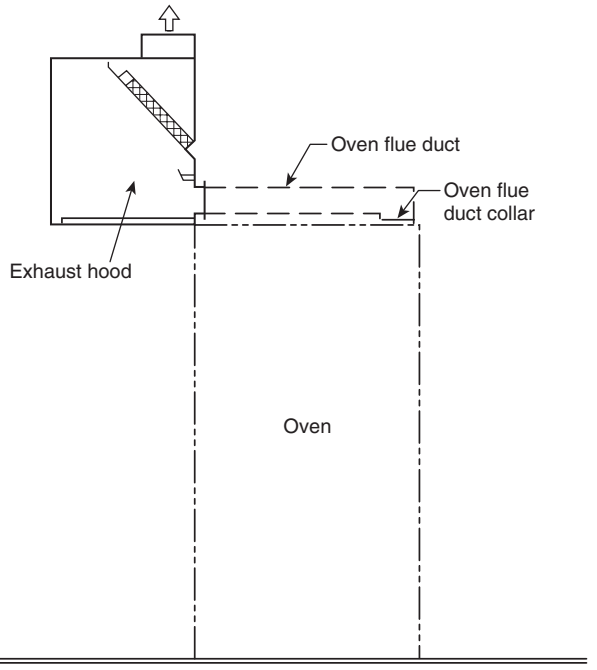

FIGURE 5.1.8.1 Typical Section of Eyebrow-Type Hood.

5.3 Exhaust Hood Assemblies with Integrated Supply Air Plenums.

5.3.1 The construction and size of exhaust hood assemblies with integrated supply air plenums shall comply with the requirements of Sections 5.1 and 5.2.

5.3.2 The construction of the outer shell or the inner exhaust shell shall comply with Section 5.1.

5.3.3 Where the outer shell is welded, the inner shell shall be of greasetight construction.

5.3.4* Fire Dampers.

5.3.4.1 A fire-actuated damper shall be installed in the supply air plenum at each point where a supply air duct inlet or a supply air outlet penetrates the continuously welded shell of the assembly.

5.3.4.2 The fire damper shall be listed for such use or be part of a listed exhaust hood with or without exhaust damper.

5.3.4.3 The actuation device shall have a maximum temperature rating of 141°C (286°F).

5.3.4.4 Supply air plenums that discharge air from the face rather than from the bottom or into the exhaust hood and that are isolated from the exhaust hood by the continuously welded shell extending to the lower outermost perimeter of the entire hood assembly shall not require a fire-actuated damper. *(See diagram A in Figure A.5.3.4.)*

5.4* Listed Hood Assemblies.

5.4.1 Listed hood assemblies shall be installed in accordance with the terms of their listing and the manufacturer's instructions.

5.4.2 Listed hood assemblies shall be tested in accordance with UL 710 or equivalent.

5.5 Listed Ultraviolet Hoods. Listed ultraviolet hoods shall be installed and maintained in accordance with the terms of their listing and the manufacturer's instructions.

5.6 Listed Ventilated Ceiling Technology. Listed ventilated ceiling technology shall be installed and maintained in accordance with the terms of its listing and the manufacturer's instructions.

Chapter 6 Grease Removal Devices in Hoods

6.1 Grease Removal Devices.

6.1.1 Listed grease filters, listed baffles, or other listed grease removal devices for use with commercial cooking equipment shall be provided.

6.1.2 Listed grease filters shall be tested in accordance with UL 1046.

6.1.3 Mesh filters shall not be used.

6.2 Installation.

6.2.1 Separation Distance.

6.2.1.1 The distance between the grease removal device and the cooking surface shall be as great as possible but not less than 457 mm (18 in.).

6.2.1.2 Where grease removal devices are used in conjunction with charcoal or charcoal-type broilers, including gas or electrically heated charbroilers, a minimum vertical distance of 1.22 m (4 ft) shall be maintained between the lower edge of the grease removal device and the cooking surface.

6.2.1.3 For cooking equipment without exposed flame and where flue gases bypass grease removal devices, the minimum vertical distance shall be permitted to be reduced to not less than 152 mm (6 in.).

6.2.1.4 Where a grease removal device is listed for separation distances less than those required in 6.2.1.1 and 6.2.1.2, the listing requirements shall be permitted.

6.2.1.5 Grease removal devices supplied as part of listed hood assemblies shall be installed in accordance with the terms of the listing and the manufacturer's instructions.

6.2.2 Grease Removal Device Protection.

6.2.2.1* Grease removal devices shall be protected from combustion gas outlets and from direct flame impingement occurring during normal operation of cooking appliances producing high flue gas temperatures, where the distance between the grease removal device and the appliance flue outlet (heat source) is less than 457 mm (18 in.).

6.2.2.2 This protection shall be permitted to be accomplished by the installation of a steel or stainless steel baffle plate between the heat source and the grease removal device.

6.2.2.3 The baffle plate shall be sized and located so that flames or combustion gases travel a distance not less than 457 mm (18 in.) from the heat source to the grease removal device.

6.2.2.4 The baffle shall be located not less than 152 mm (6 in.) from the grease removal devices.

Copyright National Fire Protection Association
Provided by IHS under license with NFPA
No reproduction or networking permitted without license from IHS
Not for Resale

6.2.3 Grease Filters.

6.2.3.1 Grease filters shall be listed and constructed of steel or listed equivalent material.

6.2.3.2 Grease filters shall be of rigid construction that will not distort or crush under normal operation, handling, and cleaning conditions.

6.2.3.3 Grease filters shall be arranged so that all exhaust air passes through the grease filters.

6.2.3.4 Grease filters shall be easily accessible and removable for cleaning.

6.2.3.5 Grease filters shall be installed at an angle not less than 45 degrees from the horizontal.

6.2.4 Grease Drip Trays.

6.2.4.1 Grease filters shall be equipped with a grease drip tray beneath their lower edges.

6.2.4.2 Grease drip trays shall be kept to the minimum size needed to collect grease.

6.2.4.3 Grease drip trays shall be pitched to drain into an enclosed metal container having a capacity not exceeding 3.8 L (1 gal).

6.2.5 Grease Filter Orientation. Grease filters that require a specific orientation to drain grease shall be clearly so designated, or the hood shall be constructed so that filters cannot be installed in the wrong orientation.

Chapter 7 Exhaust Duct Systems

7.1 General.

7.1.1 Ducts shall not pass through fire walls.

7.1.2* All ducts shall lead directly to the exterior of the building, so as not to unduly increase any fire hazard.

7.1.3 Duct systems shall not be interconnected with any other building ventilation or exhaust system.

7.1.4 All ducts shall be installed without forming dips or traps that might collect residues.

7.1.4.1 In manifold (common duct) systems, the lowest end of the main duct shall be connected flush on the bottom with the branch duct.

7.1.4.2 Exhaust ducts used in downdraft appliance ventilation systems shall be allowed to include an upturn in the duct provided the trapped area contains a low point drain to an approved grease reservoir not exceeding 3.8 L (1 gal) in capacity and the entire length of the duct is easily accessible for cleaning.

7.1.5 Openings required for accessibility shall comply with Section 7.3.

7.1.6 A sign stating the following shall be placed on all access panels:

ACCESS PANEL — DO NOT OBSTRUCT

7.1.7 Listed grease ducts shall be installed in accordance with the terms of the listing and the manufacturer's instructions.

7.2 Clearance. Clearance between ducts and combustible materials shall be provided in accordance with the requirements of Section 4.2.

7.3 Openings.

7.3.1 Openings shall be provided at the sides or at the top of the duct, whichever is more accessible, and at changes of direction.

7.3.2 Openings shall be protected by approved access constructed and installed in accordance with the requirements of 7.4.4.

7.3.3 Openings shall not be required in portions of the duct that are accessible from the duct entry or discharge.

7.3.4 For hoods with dampers in the exhaust or supply collar, an access panel for cleaning and inspection shall be provided in the duct or the hood within 457 mm (18 in.) of the damper.

7.3.5 For common exhaust duct systems, access panel openings shall be provided for installation and servicing of the fire-extinguishing system.

7.3.6 Access panel openings shall not be required in portions of the common exhaust duct or branch duct that are accessible from the branch duct connection to the exhaust hood.

7.3.7 Exhaust fans with ductwork connected to both sides shall have access for cleaning and inspection within 0.92 m (3 ft) of each side of the fan.

7.4 Openings in Ducts. All openings shall comply with the requirements of Section 7.4.

7.4.1 Horizontal Ducts.

7.4.1.1 On horizontal ducts, at least one 508 mm × 508 mm (20 in. × 20 in.) opening shall be provided for personnel entry.

7.4.1.2 Where an opening of this size is not possible, openings large enough to permit thorough cleaning shall be provided at 3.7 m (12 ft) intervals.

7.4.1.3 Openings on horizontal grease duct systems shall be provided with safe access and a work platform when not easily accessible from a 3 m (10 ft) stepladder.

7.4.1.4 Support systems for horizontal grease duct systems 609 mm (24 in.) and larger in any cross-sectional dimension shall be designed for the weight of the ductwork plus 363 kg (800 lb) at any point in the duct systems.

7.4.1.5 On nonlisted ductwork, the edge of the opening shall be not less than 38.1 mm (1½ in.) from all outside edges of the duct or welded seams.

7.4.2 Vertical Ducts.

7.4.2.1 On vertical ductwork where personnel entry is possible, access shall be provided at the top of the vertical riser to accommodate descent.

7.4.2.2 Where personnel entry is not possible, adequate access for cleaning shall be provided on each floor.

7.4.2.3 On nonlisted ductwork, the edge of the opening shall be not less than 38.1 mm (1½ in.) from all outside edges of the duct or welded seams.

7.4.3 Access Panels.

7.4.3.1 Access panels shall be of the same material and thickness as the duct.

Copyright National Fire Protection Association
Provided by IHS under license with NFPA
No reproduction or networking permitted without license from IHS
Not for Resale

7.4.3.2 Access panels shall have a gasket or sealant that is rated for 815.6ºC (1500ºF) and shall be greasetight.

7.4.3.3 Fasteners, such as bolts, weld studs, latches, or wing nuts, used to secure the access panels shall be carbon steel or stainless steel and shall not penetrate duct walls.

7.4.3.4 Listed grease duct access door assemblies (access panels) shall be installed in accordance with the terms of the listing and the manufacturer's instructions.

7.4.4 Protection of Openings.

7.4.4.1 Openings for installation, servicing, and inspection of listed fire protection system devices and for duct cleaning shall be provided in ducts and enclosures and shall conform to the requirements of Section 7.3 and 7.7.4.

7.4.4.2 Enclosure openings required to reach access panels in the ductwork shall be large enough for the removal of the access panel.

7.5 Other Grease Ducts. Other grease ducts shall comply with the requirements of this section.

7.5.1* Materials.

7.5.1.1 Ducts shall be constructed of and supported by carbon steel not less than 1.37 mm (0.054 in.) (No. 16 MSG) in thickness or stainless steel not less than 1.09 mm (0.043 in.) (No. 18 MSG) in thickness.

7.5.1.2 Factory-built grease ducts listed in accordance with UL 1978 shall be permitted to use materials in accordance with their listing.

7.5.2 Installation.

7.5.2.1 All seams, joints, penetrations, and duct-to-hood collar connections shall have a liquidtight continuous external weld.

7.5.2.2 Duct-to-hood collar connections as shown in Figure 7.5.2.2 shall not require a liquidtight continuous external weld.

7.5.2.3 Penetrations shall be permitted to be sealed by other listed devices that are tested to be greasetight and are evaluated under the same conditions of fire severity as the hood or enclosure of listed grease extractors and whose presence does not detract from the hood's or duct's structural integrity.

7.5.2.4 Internal welding shall be permitted, provided the joint is formed or ground smooth and is readily accessible for inspection.

7.5.3 Penetrations shall be sealed with listed devices in accordance with the requirements of 7.5.4.

7.5.4 Devices that require penetration of the ductwork, such as pipe and conduit penetration fittings and fasteners, shall be listed in accordance with UL 1978.

7.5.5 Welded Duct Connections.

7.5.5.1 Acceptable duct-to-duct connection shall be as follows:

(1) Telescoping joint, as shown in Figure 7.5.5.1(a)
(2) Bell-type joint, as shown in Figure 7.5.5.1(b)
(3) Flange with edge weld, as shown in Figure 7.5.5.1(c)
(4) Flange with filled weld, as shown in Figure 7.5.5.1(d)

7.5.5.2 Butt welded connections shall not be permitted.

7.5.5.3 For telescoping and bell-type connections, the inside duct section shall always be uphill of the outside duct section.

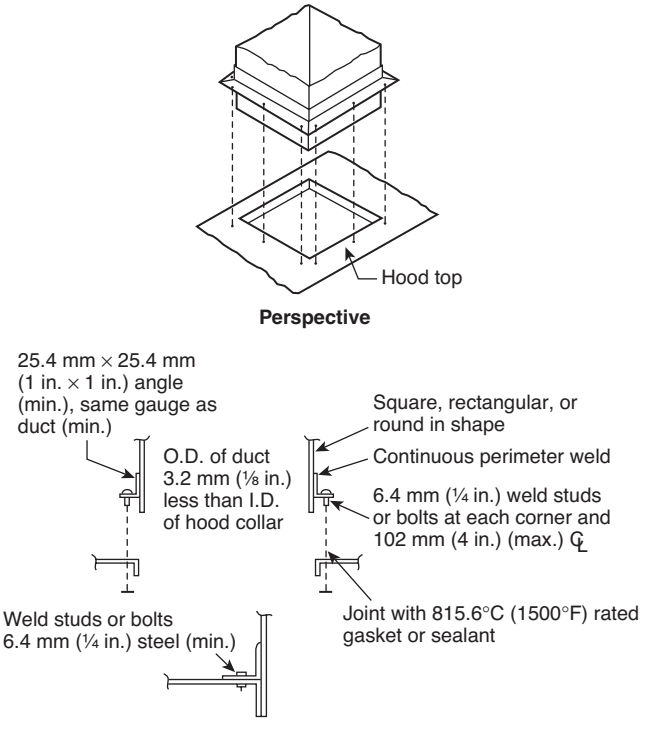

FIGURE 7.5.2.2 Permitted Duct-to-Hood Collar Connection.

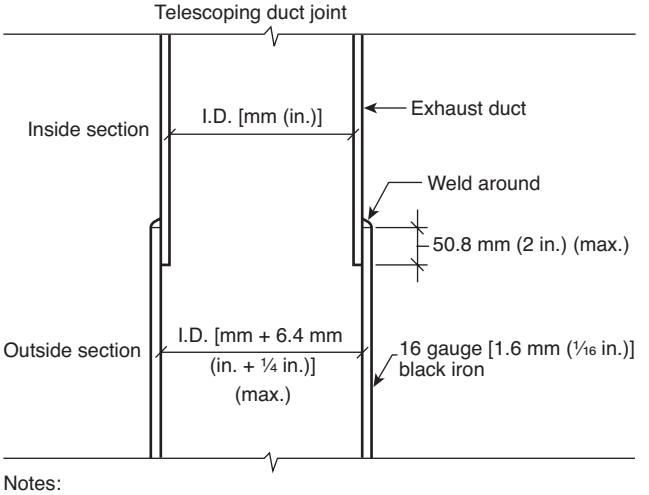

Notes:
1. Duct size decreases (going upward) with each telescope.
2. Smaller (inside) duct section is always above or uphill (on sloped duct), to be self-draining into larger (outside) duct.

FIGURE 7.5.5.1(a) Telescoping-Type Duct Connection.

7.5.5.4 For telescoping and bell-type connections, the difference between inside dimensions of overlapping sections shall not exceed 6.4 mm (¼ in.).

7.5.5.5 For telescoping and bell-type connections, the overlap shall not exceed 50.8 mm (2 in.).

Copyright National Fire Protection Association
Provided by IHS under license with NFPA
No reproduction or networking permitted without license from IHS
Not for Resale

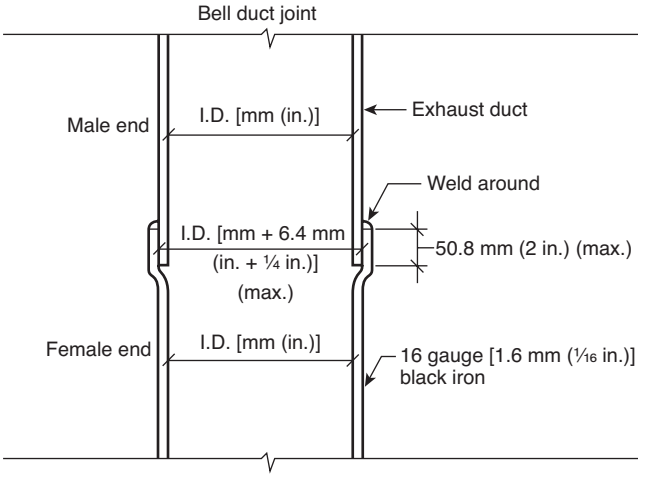

Notes:
1. Duct size stays the same throughout the duct system.
2. Smaller (inside) male duct end is always above or uphill (on sloped duct), to be self-draining into larger (outside) female duct end.

FIGURE 7.5.5.1(b) Bell-Type Duct Connection.

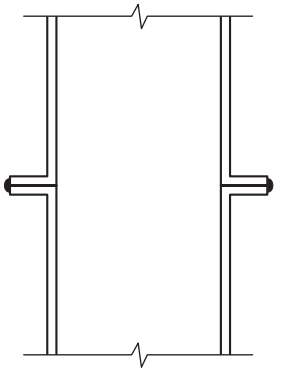

FIGURE 7.5.5.1(c) Flange with Edge Weld.

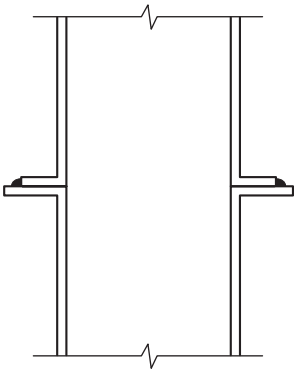

FIGURE 7.5.5.1(d) Flange with Filled Weld.

7.6 Exterior Installations.

7.6.1 The exterior portion of the ductwork shall be vertical wherever possible and shall be installed and supported on the exterior of a building.

7.6.2 Bolts, screws, rivets, and other mechanical fasteners shall not penetrate duct walls.

7.6.3 Clearance of ducts shall comply with Section 4.2.

7.6.4 All ducts shall be protected on the exterior by paint or other suitable weather-protective coating.

7.6.5 Ducts constructed of stainless steel shall not be required to have additional paint or weather-protective coatings.

7.6.6 Ductwork subject to corrosion shall have minimal contact with the building surface.

7.7 Interior Installations.

7.7.1 Duct Enclosures.

7.7.1.1 In all buildings where vertical fire barriers are penetrated, the ducts shall be enclosed in a continuous enclosure extending from the first penetrated fire barrier and any subsequent fire barriers or concealed spaces to or through the exterior, to maintain the fire resistance rating of the highest fire barrier penetrated.

7.7.1.2 In all buildings more than one story in height and in one-story buildings where the roof–ceiling assembly is required to have a fire resistance rating, the ducts shall be enclosed in a continuous enclosure extending from the lowest fire-rated ceiling or floor above the hood, through any concealed spaces, to or through the roof, to maintain the integrity of the fire separations required by the applicable building code provisions.

7.7.1.3 The enclosure shall be sealed around the duct at the point of penetration of the first fire-rated barrier after the hood, to maintain the fire resistance rating of the enclosure.

7.7.1.4 The enclosure shall be vented to the exterior of the building through weather-protected openings.

7.7.1.5 The continuous enclosure provisions shall not be required where a field-applied grease duct enclosure or a factory-built grease duct enclosure *(see Section 4.3)* is protected with a listed duct-through-penetration protection system equivalent to the fire resistance rating of the assembly being penetrated, and where the materials are installed in accordance with the conditions of the listing and the manufacturer's instructions and are acceptable to the authority having jurisdiction.

7.7.2 Enclosure Fire Resistance Rating and Enclosure Clearance.

7.7.2.1 Fire Resistance Rating.

7.7.2.1.1 Buildings less than four stories in height shall have an enclosure with a fire resistance rating of not less than 1 hour.

7.7.2.1.2 Buildings four stories or more in height shall have an enclosure with a fire resistance rating of not less than 2 hours.

7.7.2.2* Enclosure Clearance.

7.7.2.2.1 Clearance from the duct or the exhaust fan to the interior surface of enclosures of combustible construction shall be not less than 457 mm (18 in.).

Copyright National Fire Protection Association
Provided by IHS under license with NFPA
No reproduction or networking permitted without license from IHS
Not for Resale

7.7.2.2.2 Clearance from the duct to the interior surface of enclosures of noncombustible or limited-combustible construction shall be not less than 152 mm (6 in.).

7.7.2.2.3 Provisions for reducing clearances as described in Section 4.2 shall not be applicable to enclosures.

7.7.2.2.4 Clearance from the outer surfaces of field-applied grease duct enclosures and factory-built grease duct enclosures to the interior surfaces of construction installed around them shall be permitted to be reduced where the field-applied grease duct enclosure materials and factory-built grease duct enclosures are installed in accordance with the conditions of the listing and manufacturer's instructions and are acceptable to the authority having jurisdiction.

7.7.2.2.5 Field-applied grease duct enclosures and factory-built grease duct enclosures shall provide mechanical and structural integrity, resiliency, and stability when subjected to expected building environmental conditions, duct movement under general operating conditions, and duct movement as a result of interior and exterior fire conditions.

7.7.3 Protection of Coverings and Enclosure Materials.

7.7.3.1 Measures shall be taken to prevent physical damage to any covering or enclosure material.

7.7.3.2 Any damage to the covering or enclosure shall be repaired, and the covering or enclosure shall be restored to meet its intended listing and fire resistance rating and to be acceptable to the authority having jurisdiction.

7.7.3.3 In the event of a fire within a kitchen exhaust system, the duct, the enclosure, or the covering directly applied to the duct shall be inspected by qualified personnel to determine whether the duct, the enclosure, and the covering directly applied to the duct are structurally sound, capable of maintaining their fire protection functions, suitable for continued operation, and acceptable to the authority having jurisdiction.

7.7.3.4 Listed grease ducts shall be installed in accordance with the terms of the listing and the manufacturer's instructions.

7.7.4 Enclosure Openings.

7.7.4.1 Where openings in the enclosure walls are provided, they shall be protected by listed fire doors of proper rating.

7.7.4.2 Fire doors shall be installed in accordance with NFPA 80.

7.7.4.3 Openings on other listed materials or products shall be clearly identified and labeled according to the terms of the listing and the manufacturer's instructions and shall be acceptable to the authority having jurisdiction.

7.7.4.3.1 The markings specified in 7.7.4.3 shall be visible on the exterior of the enclosure and shall state the following:

ACCESS PANEL — DO NOT OBSTRUCT

7.7.4.4 The fire door shall be readily accessible, aligned, and of sufficient size to allow access to the rated access panels on the ductwork.

7.7.5 Ducts with Enclosure(s).

7.7.5.1 Each duct system shall constitute an individual system serving only exhaust hoods in one fire zone on one floor.

7.7.5.2 Multiple ducts shall not be permitted in a single enclosure unless acceptable to the authority having jurisdiction.

7.8* Termination of Exhaust System.

7.8.1 The exhaust system shall terminate as follows:

(1)*Outside the building with a fan or duct
(2) Through the roof or to the roof from outside, as in 7.8.2, or through a wall, as in 7.8.3

7.8.2 Rooftop Terminations.

7.8.2.1 Rooftop terminations shall be arranged with or provided with the following:

(1) A minimum of 3 m (10 ft) of horizontal clearance from the outlet to adjacent buildings, property lines, and air intakes
(2) A minimum of 1.5 m (5 ft) of horizontal clearance from the outlet (fan housing) to any combustible structure
(3) A vertical separation of 0.92 m (3 ft) below any exhaust outlets for air intakes within 3 m (10 ft) of the exhaust outlet
(4) The ability to drain grease out of any traps or low points formed in the fan or duct near the termination of the system into a collection container that is noncombustible, closed, rainproof, and structurally sound for the service to which it is applied and that will not sustain combustion
(5) A grease collection device that is applied to exhaust systems that does not inhibit the performance of any fan
(6) Listed grease collection systems that meet the requirements of 7.8.2.1(4) and 7.8.2.1(5)
(7) A listed grease duct complying with Section 4.4 or ductwork complying with Section 4.5
(8) A hinged upblast fan supplied with flexible weatherproof electrical cable and service hold-open retainer to permit inspection and cleaning that is listed for commercial cooking equipment with the following conditions:
  (a) Where the fan attaches to the ductwork, the ductwork shall be a minimum of 0.46 m (18 in.) away from any roof surface, as shown in Figure 7.8.2.1.
  (b) The fan shall discharge a minimum of 1.02 m (40 in.) away from any roof surface, as shown in Figure 7.8.2.1.
(9) Other approved fan, provided it meets both of the following:
  (a) The fan meets the requirements of 7.8.2.1(3) and 8.1.3.
  (b) Its discharge or its extended duct discharge meets the requirements of 7.8.2.1(2). *(See 8.1.3.)*

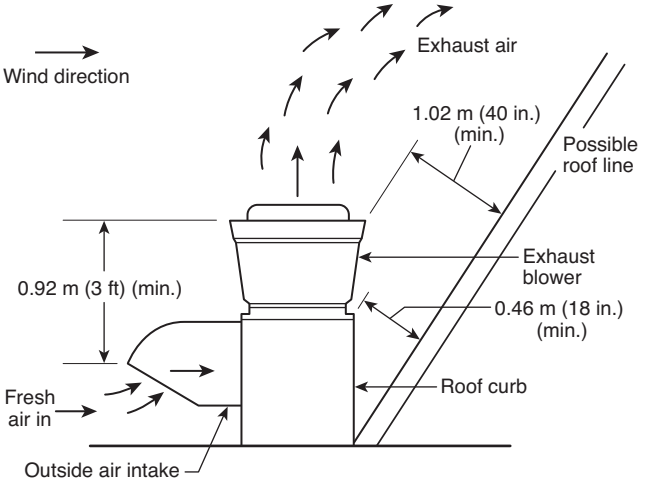

FIGURE 7.8.2.1 Upblast Fan Clearances.

Copyright National Fire Protection Association
Provided by IHS under license with NFPA
No reproduction or networking permitted without license from IHS
Not for Resale

7.8.2.2* Fans shall be provided with safe access and a work surface for inspection and cleaning.

7.8.3 Wall Terminations. Wall terminations shall be arranged with or provided with the following properties:

(1) Through a noncombustible wall with a minimum of 3 m (10 ft) of clearance from the outlet to adjacent buildings, property lines, grade level, combustible construction, electrical equipment or lines, and the closest point of any air intake or operable door or window at or below the plane of the exhaust termination.
(2) The closest point of any air intake or operable door or window above the plane of the exhaust termination shall be a minimum of 3 m (10 ft) in distance, plus 76 mm (3 in.) for each 1 degree from horizontal, the angle of degree being measured from the center of the exhaust termination to the center of the air intake or operable door or window, as indicated in Figure 7.8.3.
(3) A wall termination in a secured area shall be permitted to be at a lower height above grade if acceptable to the authority having jurisdiction.
(4) The exhaust flow directed perpendicularly outward from the wall face or upward.
(5) All the ductwork pitched to drain the grease back into the hood(s), or with a drain provided to bring the grease back into a container within the building or into a remote grease trap.
(6) A listed grease duct complying with Section 7.4, or other ducts complying with Section 7.5.
(7) An approved fan, provided it meets the requirements of 7.8.3(5) and 8.1.1 or 8.1.3.

7.8.4* Rooftop Terminations Through Combustible or Limited-Combustible Walls.

7.8.4.1 Ductwork that exits a building through a combustible or limited-combustible wall to terminate above the roof line shall have wall protection provided in accordance with Section 4.2.

7.8.4.2 Where the ductwork exits the building, the opening shall be sealed and shall include a weather-protected vented opening.

7.8.4.3 Where the ductwork exits through a rated wall, the penetration shall be protected in accordance with 4.4.1.

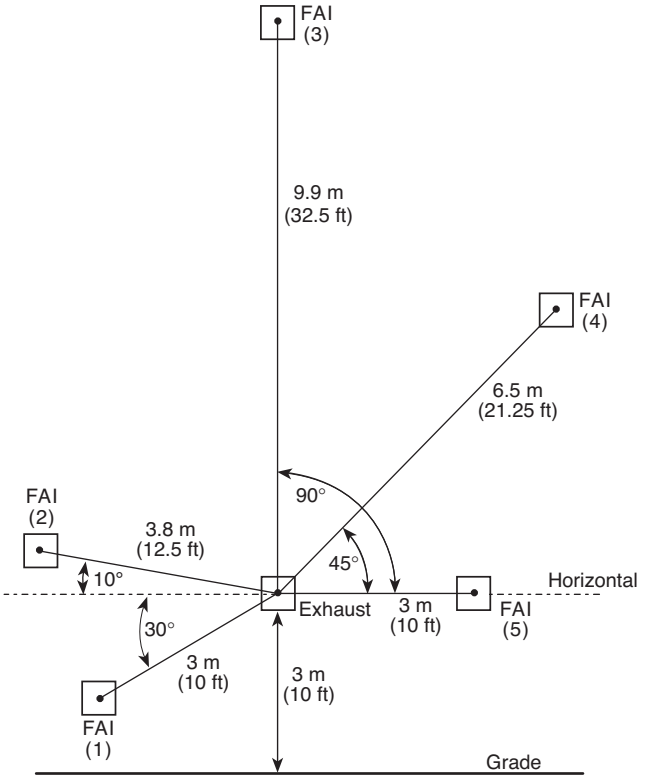

Notes:
1. Fresh air intake (FAI) applies to any air intake, including an operable door or window.
2. Examples:
   (a) FAIs 1 and 5 are on the same plane of exhaust fan or lower: 3 m (10 ft) min. between closest edges.
   (b) FAIs 2, 3, and 4 are above the plane of exhaust fan: 3 m + 76 mm (10 ft + 0.25 ft) per degree between closest edges.

FIGURE 7.8.3 Exhaust Termination Distance from Fresh Air Intake (FAI) or Operable Door or Window.

Chapter 8 Air Movement

8.1 Exhaust Fans for Commercial Cooking Equipment.

8.1.1* Upblast Exhaust Fans.

8.1.1.1 Approved upblast fans with motors surrounded by the airstream shall be hinged, supplied with flexible weatherproof electrical cable and service hold-open retainers, and listed for this use.

8.1.1.2 Installation shall conform to the requirements of Section 7.8.

8.1.1.3 Upblast fans shall have a drain directed to a readily accessible and visible grease receptacle not to exceed 3.8 L (1 gal).

8.1.2* In-Line Exhaust Fans.

8.1.2.1 In-line fans shall be of the type with the motor located outside the airstream and with belts and pulleys protected from the airstream by a greasetight housing.

8.1.2.2 In-line fans shall be connected to the exhaust duct by flanges securely bolted as shown in Figure 8.1.2.2(a) through Figure 8.1.2.2(d) or by a system specifically listed for such use.

8.1.2.3 Flexible connectors shall not be used.

8.1.2.4 If the design or positioning of the fan allows grease to be trapped, a drain directed to a readily accessible and visible grease receptacle not exceeding 3.8 L (1 gal) shall be provided.

8.1.2.5 In-line exhaust fans shall be located in easily accessible areas of adequate size to allow for service or removal.

8.1.2.6 Where the duct system connected to the fan is in an enclosure, the space or room in which the exhaust fan is located shall have the same fire resistance rating as the enclosure.

8.1.3* Utility Set Exhaust Fans.

8.1.3.1 Utility set exhaust fans, if installed at the rooftop termination point, shall meet the requirements of 7.8.2.1(1) through 7.8.2.1(3) and 7.8.2.2.

8.1.3.2 Fans installed within the building shall be located in an accessible area of adequate size to allow for service or removal.

Copyright National Fire Protection Association
Provided by IHS under license with NFPA
No reproduction or networking permitted without license from IHS
Not for Resale

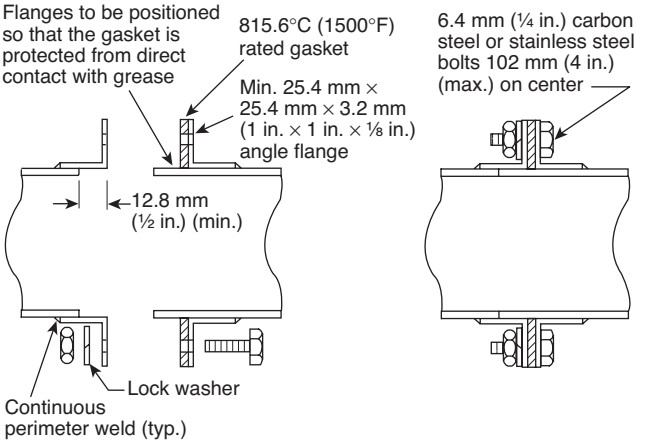

FIGURE 8.1.2.2(a) Typical Section of Duct-to-Fan Connection — Butt Joint Method.

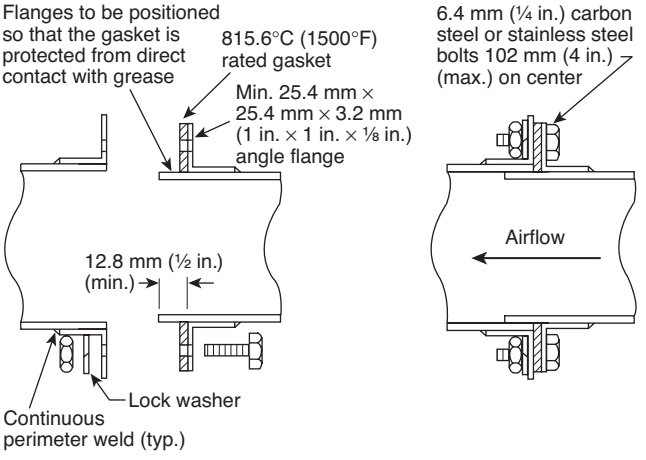

FIGURE 8.1.2.2(b) Typical Section of Duct-to-Fan Connection — Overlapping Method.

8.1.3.3 Where the duct system connected to the fan is in an enclosure, the space or room in which the exhaust fan is located shall have the same fire resistance rating as the enclosure.

8.1.3.4 The fan shall be connected to the exhaust duct by flanges securely bolted as shown in Figure 8.1.2.2(a) through Figure 8.1.2.2(d) or by a system specifically listed for such use.

8.1.3.5 Flexible connectors shall not be used.

8.1.3.6 Exhaust fans shall have a drain directed to a readily accessible and visible grease receptacle not to exceed 3.8 L (1 gal).

8.1.4 Exhaust Fan Housings. Exhaust fan housings shall be constructed of carbon steel not less than 1.37 mm (0.054 in.) (No. 16 MSG) in thickness or stainless steel not less than 1.09 mm (0.043 in.) (No. 18 MSG) in thickness or, if listed, constructed in accordance with the terms of the listing.

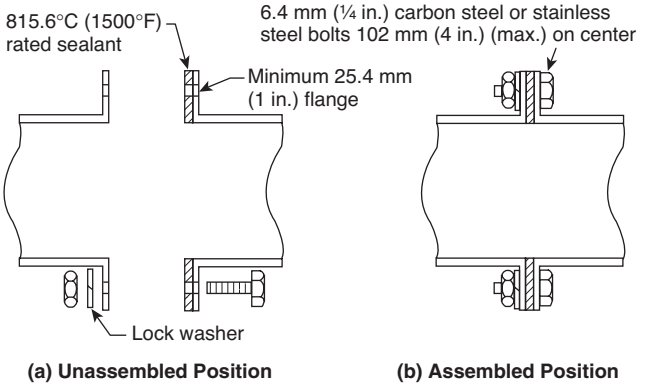

FIGURE 8.1.2.2(c) Typical Section of Duct-to-Fan Connection — Sealant Method.

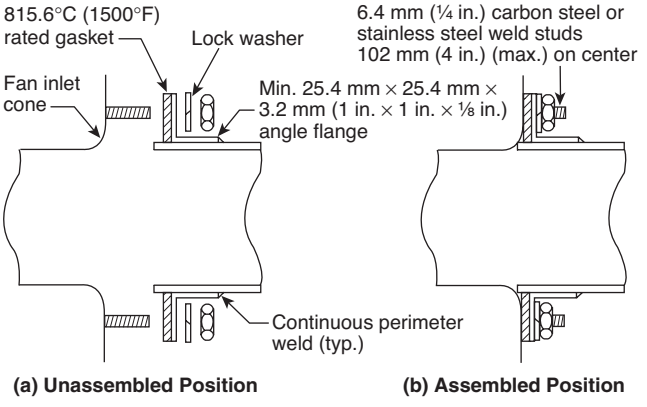

FIGURE 8.1.2.2(d) Typical Section of Duct-to-Fan Connection — Direct to Fan Inlet Cone Method.

8.1.5 Openings for Cleaning, Servicing, and Inspection.

8.1.5.1 Openings for cleaning, servicing, and inspection shall conform to the requirements of 7.3.7.

8.1.5.2 Clearances shall conform to the requirements of Section 4.2 or, if installed within an enclosure, to the requirements of 7.7.2.2.

8.1.5.3 Upblast Fans.

8.1.5.3.1 Upblast fans shall be supplied with an access opening of a minimum 76 mm by 127 mm (3 in. by 5 in.) or a circular diameter of 101 mm (4 in.) on the curvature of the outer fan housing to allow for cleaning and inspection of the fan blades.

8.1.5.3.2 On existing upblast fans where sufficient access is not available to allow for the removal of grease contamination, an approved hinge mechanism or access panel shall be installed.

8.1.6 Wiring and Electrical Equipment. All wiring and electrical equipment shall comply with NFPA 70 *(see also Chapter 9)*.

8.2 Airflow.

8.2.1 Air Velocity.

8.2.1.1* The air velocity through any duct shall be not less than 152.4 m/min (500 ft/min).

Copyright National Fire Protection Association
Provided by IHS under license with NFPA
No reproduction or networking permitted without license from IHS
Not for Resale

8.2.1.2 Transition duct sections that do not exceed 0.92 m (3 ft) in length and do not contain grease traps shall be permitted to be connected to hoods and exhaust fans that do not meet this velocity.

8.2.2 Air Volume.

8.2.2.1 Exhaust air volumes for hoods shall be of a sufficient level to provide for capture and removal of grease-laden cooking vapors.

8.2.2.2 Test data, performance acceptable to the authority having jurisdiction, or both shall be provided, displayed, or both on request.

8.2.2.3 Lower exhaust air volumes shall be permitted during no-load cooking conditions provided they are sufficient to capture and remove flue gases and residual vapors from cooking equipment.

8.2.3 Exhaust Fan Operation.

8.2.3.1 A hood exhaust fan(s) shall continue to operate after the extinguishing system has been activated unless fan shutdown is required by a listed component of the ventilation system or by the design of the extinguishing system.

8.2.3.2 The hood exhaust fan shall not be required to start upon activation of the extinguishing system if the exhaust fan and all cooking equipment served by the fan have previously been shut down.

8.3* Replacement Air.

8.3.1 Replacement air quantity shall be adequate to prevent negative pressures in the commercial cooking area(s) from exceeding 4.98 kPa (0.02 in. water column).

8.3.2 When its fire-extinguishing system discharges, makeup air supplied internally to a hood shall be shut off.

8.4 Common Duct (Manifold) Systems.

8.4.1* Master kitchen exhaust ducts that serve multiple tenants shall include provision to bleed air from outdoors or from adjacent spaces into the master exhaust duct where required to maintain the necessary minimum air velocity in the master exhaust duct.

8.4.2 Bleed air ducts shall connect to the top or side of the master exhaust duct.

8.4.3 The bleed air duct shall have a fire damper at least 304.8 mm (12 in.) from the exhaust duct connection.

8.4.4 The bleed air duct shall have the same construction and clearance requirements as the main exhaust duct from the connection to the exhaust duct to at least 304.8 mm (12 in.) on both sides of the fire damper.

8.4.5 Each bleed air duct shall have a means of adjusting (e.g., by using volume dampers) the bleed air quantity.

8.4.6 Means to adjust the bleed air quantity shall be installed between the fire damper and the source of bleed air.

8.4.7 A bleed air duct shall not be used for the exhaust of grease-laden vapors and shall be so labeled.

8.4.8 Unused tenant exhaust connections to the master exhaust duct that are not used as bleed air connections shall be disconnected and sealed at the main duct.

Chapter 9 Auxiliary Equipment

9.1 Dampers.

9.1.1 Dampers shall not be installed in exhaust ducts or exhaust duct systems.

9.1.2 Where specifically listed for such use or where required as part of a listed device or system, dampers in exhaust ducts or exhaust duct systems shall be permitted.

9.2 Electrical Equipment.

9.2.1 Wiring systems of any type shall not be installed in ducts.

9.2.2 Only where specifically listed for such use shall motors, lights, and other electrical devices be permitted to be installed in ducts or hoods or to be located in the path of travel of exhaust products.

9.2.3 Lighting Units.

9.2.3.1 Lighting units in hoods shall be listed for use over commercial cooking appliances and installed in accordance with the terms of their listing.

9.2.3.2 Lighting units on hoods shall not be located in concealed spaces except as permitted by 9.2.3.3 and 9.2.3.4.

9.2.3.3 Lighting units shall be permitted in concealed spaces where such units are part of a listed exhaust hood.

9.2.3.4 Listed lighting units specifically listed for such use and installed in accordance with the terms of the listing shall be permitted to be installed in concealed spaces.

9.2.4* All electrical equipment shall be installed in accordance with NFPA 70.

9.3 Other Equipment.

9.3.1 Fume incinerators, thermal recovery units, air pollution control devices, or other devices shall be permitted to be installed in ducts or hoods or to be located in the path of travel of exhaust products where specifically approved for such use.

9.3.1.1 Fume incinerators, thermal recovery units, air pollution control devices, or other devices installed in ducts or hoods shall comply with the following:

(1) The clearance requirements of Section 4.2
(2) Hood construction requirements in Section 5.1
(3) Exhaust duct construction complying with Chapter 7

9.3.2 Downgrading other parts of the exhaust system due to the installation of approved devices, whether listed or not, shall not be allowed.

9.3.3 Any equipment, listed or otherwise, that provides secondary filtration or air pollution control and that is installed in the path of travel of exhaust products shall be provided with an approved automatic fire-extinguishing system, installed in accordance with fire-extinguishing system manufacturer's instructions, for the protection of the component sections of the equipment and shall include protection of the ductwork downstream of the equipment, whether or not the equipment is provided with a damper.

9.3.3.1 Filter media used in secondary filtration or air pollution control units and not complying with 6.2.3 shall have fire protection that is adequate for the filter media being used in accordance with the fire-extinguishing system manufacturer's instructions.

Copyright National Fire Protection Association
Provided by IHS under license with NFPA
No reproduction or networking permitted without license from IHS
Not for Resale

9.3.4 If the equipment provides a source of ignition, it shall be provided with detection to operate the fire-extinguishing system protecting the equipment.

9.3.5 Where a cooking exhaust system employs an air pollution control device that recirculates air into the building, the requirements of Chapter 13 shall apply.

Chapter 10 Fire-Extinguishing Equipment

10.1 General Requirements.

10.1.1 Fire-extinguishing equipment for the protection of grease removal devices, hood exhaust plenums, and exhaust duct systems shall be provided.

10.1.2* Cooking equipment that produces grease-laden vapors and that might be a source of ignition of grease in the hood, grease removal device, or duct shall be protected by fire-extinguishing equipment.

10.2 Types of Equipment.

10.2.1 Fire-extinguishing equipment shall include both automatic fire-extinguishing systems as primary protection and portable fire extinguishers as secondary backup.

10.2.2 A placard identifying the use of the extinguisher as secondary backup to the automatic fire-extinguishing system shall be conspicuously placed near each portable fire extinguisher intended to be used for protection in the cooking area.

10.2.2.1 The language and wording for the placard shall be approved by the authority having jurisdiction.

10.2.3* Automatic fire-extinguishing systems shall comply with UL 300 or other equivalent standards and shall be installed in accordance with the requirements of the listing.

10.2.3.1 In existing systems, when changes in the cooking media, positioning, or replacement of cooking equipment occur, the fire-extinguishing system shall be made to comply with 10.2.3.

10.2.4 Grease removal devices, hood exhaust plenums, exhaust ducts, and cooking equipment that are not addressed in UL 300 or other equivalent test standards shall be protected with an automatic fire-extinguishing system(s) in accordance with the applicable NFPA standard(s) and all local building and fire codes and shall be approved by the authority having jurisdiction.

10.2.5 Automatic fire-extinguishing equipment provided as part of listed recirculating systems shall comply with UL 710B.

10.2.6 Automatic fire-extinguishing systems shall be installed in accordance with the terms of their listing, the manufacturer's instructions, and the following standards where applicable:

(1) NFPA 12
(2) NFPA 13
(3) NFPA 17
(4) NFPA 17A

10.2.7 Modifications to Existing Hood Systems.

10.2.7.1 Any abandoned pipe or conduit from a previous installation shall be removed from within the hood, plenum, and exhaust duct.

10.2.7.2 Penetrations and holes resulting from the removal of conduit or piping shall be sealed with listed or equivalent liquidtight sealing devices.

10.2.7.3 The addition of obstructions to spray patterns from the cooking appliance nozzle(s) such as baffle plates, shelves, or any modification shall not be permitted.

10.2.7.4 Changes or modifications to the hazard after installation of the fire-extinguishing systems shall result in re-evaluation of the system design by a properly trained, qualified, and certified person(s).

10.2.8 Fixed Baffle Hoods with Water Wash.

10.2.8.1 Grease removal devices, hood exhaust plenums, and exhaust ducts requiring protection in accordance with 10.1.1 shall be permitted to be protected by a listed fixed baffle hood containing a constant or fire-actuated water-wash system that is listed and in compliance with UL 300 or other equivalent standards and shall be installed in accordance with the requirements of their listing.

10.2.8.2 Each such area not provided with a listed water-wash extinguishing system shall be provided with a fire-extinguishing system listed for the purpose.

10.2.8.3 The water for listed fixed baffle hood assemblies shall be permitted to be supplied from the domestic water supply when the minimum water pressure and flow are provided in accordance with the terms of the listing.

10.2.8.4 The water supply shall be controlled by a supervised water supply control valve.

10.2.8.5 The water wash in a fixed baffle hood specifically listed to extinguish a fire shall be activated by the cooking equipment extinguishing system.

10.2.8.6 A water-wash system approved to be used for protection of the grease removal device(s), hood exhaust plenum(s), exhaust duct(s), or combination thereof shall include instructions and appropriate electrical interface for simultaneous activation of the water-wash system from an automatic fire-extinguishing system, where the automatic fire-extinguishing system is used for cooking equipment protection only.

10.2.8.7 Where the fire-extinguishing system provides protection for the cooking equipment, hood, and duct, activation of the water wash shall not be required.

10.2.9 The water required for listed automatic fire-extinguishing systems shall be permitted to be supplied from the domestic water supply where the minimum water pressure and flow are provided in accordance with the terms of the listing. The water supply shall be controlled by a supervised water supply control valve.

10.2.10 Water Valve Supervision. Valves controlling the water supply to listed fixed baffle hood assemblies, automatic fire-extinguishing systems, or both shall be listed indicating type of valve and shall be supervised open by one of the following methods:

(1) Central station, proprietary, or remote station alarm service
(2) Local alarm service that will cause the sounding of an audible signal at a constantly attended point
(3) Locking valves open
(4)*Sealing of valves and approved weekly recorded inspection

Copyright National Fire Protection Association
Provided by IHS under license with NFPA
No reproduction or networking permitted without license from IHS
Not for Resale

10.3 Simultaneous Operation.

10.3.1 Fixed pipe extinguishing systems in a single hazard area *(see 3.3.42 for the definition of single hazard area)* shall be arranged for simultaneous automatic operation upon actuation of any one of the systems.

10.3.1.1 Hoods installed end to end, back to back, or both, or sharing a common ductwork, and having a grease-producing appliance(s) located under one or more of the hoods shall be considered a single hazard area requiring simultaneous automatic fire protection in all hoods and ducts.

10.3.1.2 Hoods installed end to end, back to back, or both that do not share a common exhaust and are separated by a wall(s) or other means to ensure that grease-laden vapors exhausted under one hood cannot propagate to the other hoods or exhaust systems shall not be required to comply with 10.3.1.1.

10.3.2 Simultaneous operation shall not be required where the fixed pipe extinguishing system is an automatic sprinkler system.

10.3.3 Simultaneous operation shall not be required where a dry or wet chemical system is used to protect common exhaust ductwork by one of the methods specified in NFPA 17 or NFPA 17A.

10.4 Fuel Shutoff.

10.4.1 Upon activation of any fire-extinguishing system for a cooking operation, all sources of fuel and electrical power that produce heat to all equipment requiring protection by that system shall automatically shut off.

10.4.2 Steam supplied from an external source shall not be required to automatically shut off.

10.4.3 Any gas appliance not requiring protection but located under the same ventilating equipment shall also automatically shut off upon activation of any extinguishing system.

10.4.4 Shutoff devices shall require manual reset.

10.5 Manual Activation.

10.5.1 A readily accessible means for manual activation shall be located between 1067 mm and 1219 mm (42 in. and 48 in.) above the floor, be accessible in the event of a fire, be located in a path of egress, and clearly identify the hazard protected.

10.5.1.1 A manual actuation device shall be located a minimum of 3 m (10 ft) when possible and a maximum of 6 m (20 ft) from the protected kitchen appliance(s) within the path of egress.

10.5.1.2 Manual actuation using a cable-operated pull station shall not require more than 178 N (40 lb) of force, with a pull movement not to exceed 356 mm (14 in.) to actuate the fire suppression system.

10.5.2 The automatic and manual means of system activation external to the control head or releasing device shall be separate and independent of each other so that failure of one will not impair the operation of the other.

10.5.3 The manual means of system activation shall be permitted to be common with the automatic means if the manual activation device is located between the control head or releasing device and the first fusible link.

10.5.4 An automatic sprinkler system shall not require a manual means of system activation.

10.5.5 The means for manual activation shall be mechanical or rely on electrical power for activation in accordance with 10.5.6.

10.5.6 Electrical power shall be permitted to be used for manual activation if a standby power supply is provided or if supervision is provided in accordance with Section 10.7.

10.6 System Annunciation.

10.6.1 Upon activation of an automatic fire-extinguishing system, an audible alarm or visual indicator shall be provided to show that the system has activated.

10.6.2 Where a fire alarm signaling system is serving the occupancy where the extinguishing system is located, the activation of the automatic fire-extinguishing system shall activate the fire alarm signaling system.

10.7 System Supervision.

10.7.1 Where electrical power is required to operate the automatic fire-extinguishing system, the system shall be monitored by a supervisory alarm, with a standby power supply provided.

10.7.2 System supervision shall not be required where an automatic fire-extinguishing system(s) includes automatic mechanical detection and actuation as a backup detection system.

10.7.3 System supervision shall not be required where a fire-extinguishing system(s) is interconnected or interlocked with the cooking equipment power source(s) so that if the fire-extinguishing system becomes inoperable due to power failure, all sources of fuel or electrical power that produce heat to all cooking equipment serviced by that hood shall automatically shut off.

10.7.4 System supervision shall not be required where an automatic fire-extinguishing system, including automatic mechanical detection and actuation, is electrically connected to a listed fire-actuated water-wash system for simultaneous operation of both systems.

10.8 Special Design and Application.

10.8.1 Hoods containing automatic fire-extinguishing systems are protected areas; therefore, these hoods are not considered obstructions to overhead sprinkler systems and shall not require floor coverage underneath.

10.8.2 A single detection device, listed with the extinguishing system, shall be permitted for more than one appliance when installed in accordance with the terms of the listing.

10.9 Review and Certification.

10.9.1 Where required, complete drawings of the system installation, including the hood(s), exhaust duct(s), and appliances, along with the interface of the fire-extinguishing system detectors, piping, nozzles, fuel shutoff devices, agent storage container(s), and manual actuation device(s), shall be submitted to the authority having jurisdiction.

10.9.2* Installation Requirements.

10.9.2.1 Installation of systems shall be performed only by persons properly trained and qualified to install the specific system being provided.

Copyright National Fire Protection Association
Provided by IHS under license with NFPA
No reproduction or networking permitted without license from IHS
Not for Resale

10.9.2.2 The installer shall provide certification to the authority having jurisdiction that the installation is in agreement with the terms of the listing and the manufacturer's instructions and/or approved design.

10.10 Portable Fire Extinguishers.

10.10.1* Portable fire extinguishers shall be installed in kitchen cooking areas in accordance with NFPA 10 and shall be specifically listed for such use.

10.10.2 Extinguishers shall use agents that saponify upon contact with hot grease such as sodium bicarbonate and potassium bicarbonate dry chemical and potassium carbonate solutions.

10.10.3 Class B gas-type portables shall not be permitted in kitchen cooking areas.

10.10.4 The manufacturer's recommendations shall be followed.

10.10.5 Other fire extinguishers in the kitchen area shall be installed in accordance with NFPA 10.

Chapter 11 Procedures for the Use and Maintenance of Equipment

11.1 Operating Procedures.

11.1.1 Exhaust systems shall be operated whenever cooking equipment is turned on.

11.1.2 Filter-equipped exhaust systems shall not be operated with filters removed.

11.1.3 Openings provided for replacing air exhausted through ventilating equipment shall not be restricted by covers, dampers, or any other means that would reduce the operating efficiency of the exhaust system.

11.1.4 Instructions for manually operating the fire-extinguishing system shall be posted conspicuously in the kitchen and shall be reviewed with employees by the management.

11.1.5 Listed exhaust hoods shall be operated in accordance with the terms of their listings and the manufacturer's instructions.

11.1.6 Cooking equipment shall not be operated while its fire-extinguishing system or exhaust system is nonoperational or otherwise impaired.

11.1.7 Secondary filtration and pollution control equipment shall be operated in accordance with the terms of its listing and the manufacturer's recommendations.

11.1.8 Inspection and maintenance of equipment allowed in 9.3.1 shall be conducted by properly trained and qualified persons at a frequency determined by the manufacturer's instructions or equipment listing.

11.2 Inspection of Fire-Extinguishing Systems.

11.2.1* Maintenance of the fire-extinguishing systems and listed exhaust hoods containing a constant or fire-activated water system that is listed to extinguish a fire in the grease removal devices, hood exhaust plenums, and exhaust ducts shall be made by properly trained, qualified, and certified person(s) acceptable to the authority having jurisdiction at least every 6 months.

11.2.2 All actuation components, including remote manual pull stations, mechanical or electrical devices, detectors, and actuators, shall be checked for proper operation during the inspection in accordance with the manufacturer's listed procedures.

11.2.3 The specific inspection and maintenance requirements of the extinguishing system standards as well as the applicable listed installation and maintenance manuals and service bulletins shall be followed.

11.2.4* Fusible links and automatic sprinkler heads shall be replaced at least semiannually or more frequently if necessary where required by the manufacturer.

11.2.5 The year of manufacture and the date of installation of the fusible links shall be marked on the system inspection tag. The tag shall be signed or initialed by the installer.

11.2.6 Detection devices other than fusible links and automatic sprinklers shall be serviced or replaced in accordance with the manufacturer's recommendations.

11.2.7 Where automatic bulb-type sprinklers or spray nozzles are used and annual examination shows no buildup of grease or other material on the sprinkler or spray nozzles, annual replacement shall not be required.

11.2.8 Where required, certificates of inspection and maintenance shall be forwarded to the authority having jurisdiction.

11.3 Inspection of Fire Dampers.

11.3.1 Actuation components for fire dampers shall be inspected for proper operation in accordance with the manufacturer's listed procedures.

11.3.2 Replacement of Fusible Links.

11.3.2.1 Fusible links on fire damper assemblies shall be replaced at least semiannually or more frequently as necessary.

11.3.2.2 Replacement shall be made by a certified person acceptable to the authority having jurisdiction.

11.3.3* Documentation Tag.

11.3.3.1 The year of manufacture and the date of installation of the fusible links shall be documented.

11.3.3.2 The tag shall be signed or initialed by the installer.

11.4* Inspection for Grease Buildup. The entire exhaust system shall be inspected for grease buildup by a properly trained, qualified, and certified company or person(s) acceptable to the authority having jurisdiction and in accordance with Table 11.4.

11.5 Inspection and Maintenance of Listed Hoods Containing Mechanical, Water Spray, or Ultraviolet Devices. Listed hoods containing mechanical or fire-actuated dampers, internal washing components, or other mechanically operated devices shall be inspected and tested by properly trained and qualified persons every 6 months or at frequencies recommended by the manufacturer in accordance with their listings.

11.6 Cleaning of Exhaust Systems.

11.6.1 Upon inspection, if the exhaust system is found to be contaminated with deposits from grease-laden vapors, the contaminated portions of the exhaust system shall be cleaned by a properly trained, qualified, and certified company or person(s) acceptable to the authority having jurisdiction.

Copyright National Fire Protection Association
Provided by IHS under license with NFPA
No reproduction or networking permitted without license from IHS
Not for Resale

Table 11.4 Schedule of Inspection for Grease Buildup

Type or Volume of Cooking	Inspection Frequency
Systems serving solid fuel cooking operations	Monthly
Systems serving high-volume cooking operations, such as 24-hour cooking, charbroiling, or wok cooking	Quarterly
Systems serving moderate-volume cooking operations	Semiannually
Systems serving low-volume cooking operations, such as churches, day camps, seasonal businesses, or senior centers	Annually

11.6.2* Hoods, grease removal devices, fans, ducts, and other appurtenances shall be cleaned to remove combustible contaminants prior to surfaces becoming heavily contaminated with grease or oily sludge.

11.6.3 At the start of the cleaning process, electrical switches that could be activated accidentally shall be locked out.

11.6.4 Components of the fire suppression system shall not be rendered inoperable during the cleaning process.

11.6.5 Fire-extinguishing systems shall be permitted to be rendered inoperable during the cleaning process where serviced by properly trained and qualified persons.

11.6.6 Flammable solvents or other flammable cleaning aids shall not be used.

11.6.7 Cleaning chemicals shall not be applied on fusible links or other detection devices of the automatic extinguishing system.

11.6.8 After the exhaust system is cleaned, it shall not be coated with powder or other substance.

11.6.9 When cleaning procedures are completed, all access panels (doors) and cover plates shall be restored to their normal operational condition.

11.6.10 When an access panel is removed, a service company label or tag preprinted with the name of the company and giving the date of inspection or cleaning shall be affixed near the affected access panels.

11.6.11 Dampers and diffusers shall be positioned for proper airflow.

11.6.12 When cleaning procedures are completed, all electrical switches and system components shall be returned to an operable state.

11.6.13 When an exhaust cleaning service is used, a certificate showing the name of the servicing company, the name of the person performing the work, and the date of inspection or cleaning shall be maintained on the premises.

11.6.14 After cleaning or inspection is completed, the exhaust cleaning company and the person performing the work at the location shall provide the owner of the system with a written report that also specifies areas that were inaccessible or not cleaned.

11.6.15 Where required, certificates of inspection and cleaning and reports of areas not cleaned shall be submitted to the authority having jurisdiction.

11.7 Cooking Equipment Maintenance.

11.7.1 Inspection and servicing of the cooking equipment shall be made at least annually by properly trained and qualified persons.

11.7.2 Cooking equipment that collects grease below the surface, behind the equipment, or in cooking equipment flue gas exhaust, such as griddles or charbroilers, shall be inspected and, if found with grease accumulation, cleaned by a properly trained, qualified, and certified person acceptable to the authority having jurisdiction.

Chapter 12 Minimum Safety Requirements for Cooking Equipment

12.1 Cooking Equipment.

12.1.1 Cooking equipment shall be approved based on one of the following criteria:

(1) Listings by a testing laboratory
(2) Test data acceptable to the authority having jurisdiction

12.1.2 Installation.

12.1.2.1 All listed appliances shall be installed in accordance with the terms of their listings and the manufacturer's instructions.

12.1.2.2* Cooking appliances requiring protection shall not be moved, modified, or rearranged without prior reevaluation of the fire-extinguishing system by the system installer or servicing agent, unless otherwise allowed by the design of the fire-extinguishing system.

12.1.2.3 The fire-extinguishing system shall not require reevaluation where the cooking appliances are moved for the purposes of maintenance and cleaning, provided the appliances are returned to approved design location prior to cooking operations, and any disconnected fire-extinguishing system nozzles attached to the appliances are reconnected in accordance with the manufacturer's listed design manual.

12.1.2.3.1 An approved method shall be provided that will ensure that the appliance is returned to an approved design location.

12.1.2.4 All deep-fat fryers shall be installed with at least a 406 mm (16 in.) space between the fryer and surface flames from adjacent cooking equipment.

12.1.2.5 Where a steel or tempered glass baffle plate is installed at a minimum 203 mm (8 in.) in height between the fryer and surface flames of the adjacent appliance, the requirement for a 406 mm (16 in.) space shall not apply.

12.1.2.5.1 If the fryer and the surface flames are at different horizontal planes, the minimum height of 203 mm (8 in.) shall be measured from the higher of the two.

12.2 Operating Controls. Deep-fat fryers shall be equipped with a separate high-limit control in addition to the adjustable operating control (thermostat) to shut off fuel or energy when the fat temperature reaches 246°C (475°F) at 25.4 mm (1 in.) below the surface.

Copyright National Fire Protection Association
Provided by IHS under license with NFPA
No reproduction or networking permitted without license from IHS
Not for Resale

Chapter 13 Recirculating Systems

13.1 General Requirements. Recirculating systems containing or for use with appliances used in processes producing smoke or grease-laden vapors shall be equipped with components complying with the following:

(1) The clearance requirements of Section 4.2
(2) A hood complying with the requirements of Chapter 5
(3) Grease removal devices complying with Chapter 6
(4) The air movement requirements of 8.2.1.2 and 8.2.2.3
(5) Auxiliary equipment (such as particulate and odor removal devices) complying with Chapter 9
(6) Fire-extinguishing equipment complying with the requirements of Chapter 10 with the exception of 10.1.1 and 10.5.1, which shall not apply
(7) The use and maintenance requirements of Chapter 11
(8) The minimum safety requirements of Chapter 12
(9) All the requirements of Chapter 13

13.2 Design Restrictions. All recirculating systems shall comply with the requirements of Section 13.2.

13.2.1 Only gas-fueled or electrically fueled cooking appliances shall be used.

13.2.2 Listed gas-fueled equipment designed for use with specific recirculating systems shall have the flue outlets connected in the intended manner.

13.2.3 Gas-fueled appliances shall have a minimum 457 mm (18 in.) clearance from the flue outlet to the filter inlet in accordance with 6.2.2 and shall meet the installation requirements of NFPA 54 or NFPA 58.

13.2.4 Recirculating systems shall be listed with a testing laboratory in accordance with UL 710B or equivalent.

13.2.4.1 The recirculating system listing shall include integral fire protection for recirculating hoods, including canopy type.

13.2.4.2 Cooking appliances that require protection and that are under a recirculating hood shall be protected by either the integral fire protection system for the hood or a system in accordance with Chapter 10.

13.2.5 There shall be no substitution or exchange of cooking appliances, filter components, blower components, or fire-extinguishing system components that would violate the listing of the appliance.

13.2.6 A recirculating system shall not use cooking equipment that exceeds the recirculating system's labeled maximum limits for that type of equipment, stated in maximum energy input, maximum cooking temperature, and maximum square area of cooking surface or cubic volume of cooking cavity.

13.2.7 The listing label shall show the type(s) of cooking equipment tested and the maximum limits specified in 13.2.6.

13.2.8 A fire-actuated damper shall be installed at the exhaust outlet of the system.

13.2.9 The fire damper shall be constructed of at least the same gauge as the shell.

13.2.10 The actuation device for the fire damper shall have a maximum temperature rating of 190°C (375°F).

13.2.11 The power supply of any electrostatic precipitator (ESP) shall be of the "cold spark," ferroresonant type in which the voltage falls off as the current draw of a short increases.

13.2.12 Listing evaluation shall include the following:

(1) Capture and containment of vapors at published and labeled airflows
(2) Grease discharge at the exhaust outlet of the system not to exceed an average of 5 mg/m^3 of exhausted air sampled from that equipment at maximum amount of product that is capable of being processed over a continuous 8-hour test per EPA Test Method 202 with the system operating at its minimum listed airflow
(3) Listing and labeling of clearance to combustibles from all sides, top, and bottom
(4) Electrical connection in the field in accordance with NFPA 70
(5) Interlocks on all removable components that lie in the path of airflow within the unit to ensure that they are in place during operation of the cooking appliance

13.3 Interlocks.

13.3.1 The recirculating system shall be provided with interlocks of all critical components and operations as indicated in 13.3.2 through 13.3.4 such that, if any of these interlocks are interrupted, the cooking appliance shall not be able to operate.

13.3.2 All closure panels encompassing airflow sections shall have interlocks to ensure that the panels are in place and fully sealed.

13.3.3 Each filter component (grease and odor) shall have an interlock to prove the component is in place.

13.3.4 ESP Interlocks.

13.3.4.1 Each ESP shall have a sensor to prove its performance is as designed, with no interruption of the power to exceed 2 minutes.

13.3.4.2 The sensor shall be a manual reset device or circuit.

13.3.5 Airflow Switch or Transducer.

13.3.5.1 An airflow switch or transducer shall be provided after the last filter component to ensure that a minimum airflow is maintained.

13.3.5.2 The airflow switch or transducer shall open the interlock circuit when the airflow falls 25 percent below the system's normal operating flow or 10 percent below its listed minimum rating, whichever is lower.

13.3.5.3 The airflow switch or transducer shall be a manual reset device or circuit.

13.4 Location and Application Restrictions.

13.4.1 The location of recirculating systems shall be approved by the authority having jurisdiction.

13.4.2 Items to be reviewed in the fire risk assessment shall include, but not be limited to, life safety, combustibility of surroundings, proximity to air vents, and total fuel load.

13.5 Additional Fire Safety Requirements.

13.5.1 In addition to the appliance nozzle(s), a recirculating system shall be listed with the appropriate fire protection for grease filters, grease filtration, odor filtration units, and ductwork, where applicable.

Copyright National Fire Protection Association
Provided by IHS under license with NFPA
No reproduction or networking permitted without license from IHS
Not for Resale

13.5.2 In addition to any other fire-extinguishing system activation device, there shall be a fire-extinguishing system activation device installed downstream of any ESP.

13.5.3 The requirements of Section 10.6 shall also apply to recirculating system locations.

13.5.4 A means of manual activation of the fire-extinguishing system shall be provided in an area where it is safely accessible in the event of a fire in the appliance.

13.5.5 The manual activation device for the fire-extinguishing system shall be clearly identified.

13.6 Use and Maintenance.

13.6.1 Automatic or manual covers on cooking appliances, especially fryers, shall not interfere with the application of the fire suppression system.

13.6.2 All filters shall be cleaned or replaced in accordance with the manufacturer's instructions.

13.6.3 All ESPs shall be cleaned a minimum of once per week following the manufacturer's cleaning instructions.

13.6.4 The entire hood plenum and the blower section shall be cleaned a minimum of once every 3 months.

13.6.5 Inspection and testing of the total operation and all safety interlocks in accordance with the manufacturer's instructions shall be performed by qualified service personnel a minimum of once every 6 months or more frequently if required.

13.6.6 Fire-extinguishing equipment shall be inspected in accordance with Section 11.2.

13.6.7 A signed and dated log of maintenance as performed in accordance with 13.6.4 and 13.6.5 shall be available on the premises for use by the authority having jurisdiction.

Chapter 14 Solid Fuel Cooking Operations

14.1 Venting Application. Venting requirements of solid fuel cooking operations shall be determined in accordance with 14.1.1 through 14.1.7.

14.1.1 Where solid fuel cooking equipment is required by the manufacturer to have a natural draft, the vent shall comply with Section 14.4.

14.1.2 Where the solid fuel cooking equipment has a self-contained top, is the only appliance to be vented in an isolated space (except for a single water heater with its own separate vent), has a separate makeup air system, and is provided with supply and return air (not supplied or returned from other spaces), the system shall comply with Sections 14.4 and 14.6.

14.1.3 Where the solid fuel cooking equipment is located in a space with other vented equipment, all vented equipment shall have an exhaust system interlocked with a makeup air system for the space per Section 14.6.

14.1.4 Natural draft ventilation systems and power-exhausted ventilation systems shall comply with Sections 14.3, 14.4, and 14.6.

14.1.5 Where a solid fuel cooking appliance allows effluent to escape from the appliance opening, this opening shall be covered by a hood and an exhaust system that meets the requirements of Sections 14.3, 14.4, and 14.6.

14.1.6 Solid fuel cooking operations shall have spark arresters to minimize the passage of airborne sparks and embers into plenums and ducts.

14.1.7 Where the solid fuel cooking operation is not located under a hood, a spark arrester shall be provided to minimize the passage of sparks and embers into flues and chimneys.

14.2 Location of Appliances.

14.2.1 Every appliance shall be located with respect to building construction and other equipment so as to permit access to the appliance.

14.2.2* Solid fuel cooking appliances shall not be installed in confined spaces.

14.2.3 Solid fuel cooking appliances listed for installation in confined spaces such as alcoves shall be installed in accordance with the terms of the listing and the manufacturer's instructions.

14.2.4 Solid fuel cooking appliances shall not be installed in any location where gasoline or any other flammable vapors or gases are present.

14.3 Hoods for Solid Fuel Cooking.

14.3.1 Hoods shall be sized and located in a manner capable of capturing and containing all of the effluent discharging from the appliances.

14.3.2 The hood and its exhaust system shall comply with the requirements of Chapters 5 through 10.

14.3.3 Exhaust systems serving solid fuel cooking equipment, including gas or electrically operated equipment, shall be separate from all other exhaust systems.

14.3.4 Cooking processes, including but not limited to those that use any solid fuel for cooking enhancement or smoke flavoring, shall comply with 14.3.3.

14.3.5 Cooking equipment not requiring automatic fire-extinguishing equipment (per the provisions of Chapter 10) shall be permitted to be installed under a common hood with solid fuel cooking equipment that is served by a duct system separate from all other exhaust systems.

14.4 Exhaust for Solid Fuel Cooking. Where a hood is not required, in buildings where the duct system is three stories or less in height, a duct complying with Chapter 7 shall be provided.

14.4.1 If a hood is used in buildings where the duct system is three stories or less in height, the duct system shall comply with Chapter 7.

14.4.2 A listed or approved grease duct system that is four stories in height or greater shall be provided for solid fuel cooking exhaust systems.

14.4.3 Where a hood is used, the duct system shall conform with the requirements of Chapter 7.

14.4.4 Wall terminations of solid fuel exhaust systems shall be prohibited.

14.5 Grease Removal Devices for Solid Fuel Cooking.

14.5.1 Grease removal devices shall be constructed of steel or stainless steel or be approved for solid fuel cooking.

Copyright National Fire Protection Association
Provided by IHS under license with NFPA
No reproduction or networking permitted without license from IHS
Not for Resale

14.5.2 If airborne sparks and embers can be generated by the solid fuel cooking operation, spark arrester devices shall be used prior to using the grease removal device to minimize the entrance of these sparks and embers into the grease removal device and into the hood and the duct system.

14.5.3 Filters shall be a minimum of 1.2 m (4 ft) above the appliance cooking surface.

14.6 Air Movement for Solid Fuel Cooking.

14.6.1 Exhaust system requirements shall comply with Chapter 8 for hooded operation or shall be installed in accordance with the manufacturer's recommendations for unhooded applications.

14.6.2 A replacement or makeup air system shall be provided to ensure a positive supply of replacement air at all times during cooking operations.

14.6.3 Makeup air systems serving solid fuel cooking operations shall be interlocked with the exhaust air system and powered, if necessary, to prevent the space from attaining a negative pressure while the solid fuel appliance is in operation.

14.7 Fire-Extinguishing Equipment for Solid Fuel Cooking.

14.7.1 Solid fuel cooking appliances that produce grease-laden vapors shall be protected by listed fire-extinguishing equipment.

14.7.2 Where acceptable to the authority having jurisdiction, solid fuel cooking appliances constructed of solid masonry or reinforced portland or refractory cement concrete and vented in accordance with NFPA 211 shall not require fixed automatic fire-extinguishing equipment.

14.7.3 Listed fire-extinguishing equipment shall be provided for the protection of grease removal devices, hoods, and duct systems.

14.7.4 Where acceptable to the authority having jurisdiction, solid fuel cooking appliances constructed of solid masonry or reinforced portland or refractory cement concrete and vented in accordance with NFPA 211 shall not require automatic fire-extinguishing equipment for the protection of grease removal devices, hoods, and duct systems.

14.7.5 Listed fire-extinguishing equipment for solid fuel–burning cooking appliances, where required, shall comply with Chapter 10 and shall use water-based agents.

14.7.6 Fire-extinguishing equipment shall be rated and designed to extinguish solid fuel cooking fires, in accordance with the manufacturer's recommendations.

14.7.7 The fire-extinguishing equipment shall be of sufficient size to totally extinguish fire in the entire hazard area and prevent reignition of the fuel.

14.7.8* All solid fuel appliances (whether or not under a hood) with fire boxes of 0.14 m^3 (5 ft^3) volume or less shall have at least a listed 2-A rated water spray fire extinguisher or a 6 L (1.6 gal) wet chemical fire extinguisher listed for Class K fires in accordance with NFPA 10 in the immediate vicinity of the appliance.

14.7.9 Hose Protection.

14.7.9.1 Solid fuel appliances with fireboxes exceeding 0.14 m^3 (5 ft^3) shall be provided with a fixed water pipe system with a hose in the kitchen capable of reaching the firebox.

14.7.9.1.1 The hose shall be equipped with an adjustable nozzle capable of producing a fine to medium spray or mist.

14.7.9.1.2 The nozzle shall be of the type that cannot produce a straight stream.

14.7.9.2 The system shall have a minimum operating pressure of 275.8 kPa (40 psi) and shall provide a minimum of 19 L/min (5 gpm).

14.7.10 Fire suppression for fuel storage areas shall comply with Section 14.9 of this standard.

14.7.11 In addition to the requirements of 14.7.8 through 14.7.10, where any solid fuel cooking appliance is also provided with auxiliary electric, gas, oil, or other fuel for ignition or supplemental heat and the appliance is also served by any portion of a fire-extinguishing system complying with Chapter 10, such auxiliary fuel shall be shut off on actuation of the fire-extinguishing system.

14.8 Procedures for Inspection, Cleaning, and Maintenance for Solid Fuel Cooking. Solid fuel cooking appliances shall be inspected, cleaned, and maintained in accordance with the procedures outlined in Chapter 11 and with 14.8.1 through 14.8.5.

14.8.1 The combustion chamber shall be scraped clean to its original surface once each week and shall be inspected for deterioration or defects.

14.8.2 Any significant deterioration or defect that might weaken the chamber or reduce its insulation capability shall be immediately repaired.

14.8.3 The flue or chimney shall be inspected weekly for the following conditions:

(1) Residue that might begin to restrict the vent or create an additional fuel source
(2) Corrosion or physical damage that might reduce the flue's capability to contain the effluent

14.8.3.1 The flue or chimney shall be cleaned before these conditions exist.

14.8.3.2 The flue or chimney shall be repaired or replaced if any unsafe condition is evident.

14.8.4 Spark arrester screens located at the entrance of the flue or in the hood assembly shall be cleaned prior to their becoming heavily contaminated and restricted.

14.8.5 Filters and filtration devices installed in a hood shall be cleaned per 14.8.4.

14.9 Minimum Safety Requirements: Fuel Storage, Handling, and Ash Removal for Solid Fuel Cooking.

14.9.1 Installation Clearances.

14.9.1.1 Solid fuel cooking appliances shall be installed on floors of noncombustible construction that extend 0.92 m (3 ft) in all directions from the appliance.

14.9.1.2 Floors with noncombustible surfaces shall be permitted to be used where they have been approved for such use by the authority having jurisdiction.

14.9.1.3 Floor assemblies that have been listed for solid fuel appliance applications shall be permitted to be used.

14.9.1.4 Solid fuel cooking appliances that have been listed for zero clearance to combustibles on the bottom and sides

Copyright National Fire Protection Association
Provided by IHS under license with NFPA
No reproduction or networking permitted without license from IHS
Not for Resale

and have an approved hearth extending 0.92 m (3 ft) in all directions from the service door(s) shall be permitted to be used on combustible floors.

14.9.1.5 Combustible and limited-combustible surfaces or construction within 0.92 m (3 ft) of the sides or 1.8 m (6 ft) above a solid fuel cooking appliance shall be protected in a manner acceptable to the authority having jurisdiction.

14.9.1.6 Solid fuel cooking appliances that are specifically listed for less clearance to combustibles shall be permitted to be installed in accordance with the requirements of the listing and the manufacturer's instructions.

14.9.2 Solid Fuel Storage.

14.9.2.1 Fuel storage shall not exceed a one-day supply where storage is in the same room as the solid fuel appliance or in the same room as the fuel-loading or clean-out doors.

14.9.2.2 Fuel shall not be stored above any heat-producing appliance or vent or closer than 0.92 m (3 ft) to any portion of a solid fuel appliance constructed of metal or to any other cooking appliance that could ignite the fuel.

14.9.2.3 Fuel shall be permitted to be stored closer than the requirements of 14.9.2.2 where a solid fuel appliance or other cooking appliance is listed or approved for less clearance to combustibles.

14.9.2.4 Fuel shall not be stored in the path of the ash removal.

14.9.2.5 Where stored in the same building as the solid fuel appliance, fuel shall be stored only in an area with walls, floor, and ceiling of noncombustible construction extending at least 0.92 m (3 ft) past the outside dimensions of the storage pile.

14.9.2.6 Fuel shall be permitted in the protected areas where combustible or limited-combustible materials are protected in accordance with 4.2.3.

14.9.2.7 Fuel shall be separated from all flammable liquids, all ignition sources, all chemicals, and all food supplies and packaging goods.

14.9.2.8 All fuel storage areas shall be provided with a sprinkler system meeting the requirements of NFPA 13 and acceptable to the authority having jurisdiction.

14.9.2.9 Where acceptable to the authority having jurisdiction, fuel storage areas shall be permitted to be protected with a fixed pipe system capable of reaching all parts of the area and meeting the requirements of 14.7.1 through 14.7.11.

14.9.2.10 The portable fire extinguisher specified in 14.7.8 shall be permitted to be used for a solid fuel pile, provided that the fuel pile does not exceed 0.14 m^3 (5 ft^3).

14.9.3 Solid Fuel Handling and Ash Removal.

14.9.3.1 Solid fuel shall be ignited with a match, an approved built-in gas flame, or other approved ignition source.

14.9.3.2 Combustible or flammable liquids shall not be used to assist ignition.

14.9.3.3 Matches and other portable ignition sources shall not be stored in the vicinity of the solid fuel appliance.

14.9.3.4 Solid fuel shall be added to the fire as required in a safe manner and in quantities and ways not creating a higher flame than is required.

14.9.3.5 Long-handled tongs, hooks, and other required devices shall be provided and used to safely add fuel, adjust the fuel position, and control the fire without the user having to reach into the firebox.

14.9.3.6 Ash Protection.

14.9.3.6.1 Ash, cinders, and other fire debris shall be removed from the firebox at adequately regular intervals to prevent interference with the draft to the fire and to minimize the length of time the access door is open.

14.9.3.6.2 All ash shall be removed from the chamber a minimum of once a day.

14.9.3.6.3 The ash shall be sprayed adequately with water before removal to extinguish any hot ash or cinders and to control the dust when the ash is moved.

14.9.3.7 Hose Protection.

14.9.3.7.1 For the purposes described in 14.9.3.6.3, to cool a fire that has become too hot and to stop all fire before the premises are vacated, a water supply with a flexible hose shall be provided at the solid fuel appliance.

14.9.3.7.2 For appliances with fireboxes not exceeding 0.14 m^3 (5 ft^3), the water source shall be permitted to be a 37.9 L (10 gal) container with a gravity arrangement or a hand pump for pressure.

14.9.3.7.3 For appliances with fireboxes over 0.14 m^3 (5 ft^3), the water source shall be a fixed pipe water system with a hose of adequate length to reach the combustion and cooking chambers of the appliance.

14.9.3.7.4 For either application, the nozzle shall be fitted with a manual shutoff device and shall be of the type to provide a fine to medium spray of adequate length to reach all areas of the combustion and cooking chambers.

14.9.3.7.4.1 The nozzle shall be of the type that cannot produce a straight stream.

14.9.3.8 Ash Removal Container or Cart.

14.9.3.8.1 A heavy metal container or cart (minimum 16 gauge) with a cover shall be provided for the removal of ash.

14.9.3.8.2 The ash removal container or cart shall not exceed a maximum of 75.7 L (20 gal) capacity, shall be assigned for this one purpose, shall be able to be handled easily by any employee assigned the task, and shall pass easily through any passageway to the outside of the building.

14.9.3.8.3 The container or cart shall always be covered when it is being moved through the premises.

14.9.3.8.4 When any hole occurs in a container from corrosion or damage, the container shall be repaired or replaced immediately.

14.9.3.9 Ash Removal Process.

14.9.3.9.1 Tools shall be provided so that ash removal can be accomplished without having to reach into the chamber.

14.9.3.9.2 The ash shall be spread out gently in small lots on the chamber floor or on a shovel to be sprayed before it is removed to the metal container or cart.

14.9.3.9.3 If the floor of the chamber is of a metal that is subject to rapid corrosion from water, then a noncombustible,

Copyright National Fire Protection Association
Provided by IHS under license with NFPA
No reproduction or networking permitted without license from IHS
Not for Resale

corrosion-resistant pan shall be placed just outside the clean-out door for this purpose.

14.9.3.9.4 The ash shall be carried to a separate heavy metal container (or dumpster) used exclusively for the purpose.

14.9.4 Other Safety Requirements.

14.9.4.1 Metal-fabricated solid fuel cooking appliances shall be listed for the application where produced in practical quantities or shall be approved by the authority having jurisdiction.

14.9.4.2 Where listed, metal-fabricated solid fuel cooking appliances shall be installed in accordance with the terms of their listings and with the applicable requirements of this standard.

14.9.4.3 Site-Built Solid Fuel Cooking Appliances.

14.9.4.3.1 Site-built solid fuel cooking appliances shall be submitted for approval to the authority having jurisdiction before being considered for installation.

14.9.4.3.2 All units submitted to the authority having jurisdiction shall be installed, operated, and maintained in accordance with the approved terms of the manufacturer's instructions and any additional requirements set forth by the authority having jurisdiction.

14.9.4.4 Except for the spark arresters required in 14.1.6, there shall be no additional devices of any type in any portion of the appliance, flue pipe, and chimney of a natural draft solid fuel operation.

14.9.4.5 No solid fuel cooking device of any type shall be permitted for deep-fat frying involving more than 0.95 L (1 qt) of liquid shortening, nor shall any solid fuel cooking device be permitted within 0.92 m (3 ft) of any deep-fat frying unit.

Chapter 15 Down Draft Appliance Ventilation Systems

15.1* General Requirements.

15.1.1 Down draft appliance ventilation systems containing or for use with appliances used in processes producing smoke or grease-laden vapors shall be equipped with components complying with the following:

(1) The clearance requirements of Section 4.2
(2) The primary collection means designed for collecting cooking vapors and residues complying with the requirements of Chapter 5
(3) Grease removal devices complying with Chapter 6
(4) Special-purpose filters as listed in accordance with UL 1046
(5) Exhaust ducts complying with Chapter 7
(6) The air movement requirements of 8.2.1.2 and 8.2.2.3
(7) Auxiliary equipment (such as particulate and odor removal devices) complying with Chapter 9
(8) Fire-extinguishing equipment complying with the requirements of Chapter 10 and as specified in Section 15.2
(9) The use and maintenance requirements of Chapter 11
(10) The minimum safety requirements of Chapter 12

15.1.2 The down draft appliance ventilation system shall be capable of capturing and containing all of the effluent discharging from the appliance(s) it is serving.

15.2 Fire-Extinguishing Equipment. For fire-extinguishing equipment on down draft appliance ventilation systems, the following shall apply:

(1) Cooking surface protection shall be provided.
(2) At least one fusible link or heat detector shall be installed within each exhaust duct opening in accordance with the manufacturer's listing.
(3) A fusible link or heat detector shall be provided above each protected cooking appliance and in accordance with the extinguishing system manufacturer's listing.
(4) A manual activation device shall be provided as part of each appliance at a height acceptable to the authority having jurisdiction.

15.2.1 A listed down draft appliance ventilation system employing an integral fire-extinguishing system including detection systems that has been evaluated for grease and smoke capture, fire extinguishing, and detection shall be considered as complying with Section 15.2.

15.2.2 The down draft appliance ventilation system shall be provided with interlocks such that the cooking fuel supply will not be activated unless the exhaust and supply air systems have been activated.

15.3 Airflow Switch or Transducer.

15.3.1 An airflow switch or transducer shall be provided after the last filter component to ensure that a minimum airflow is maintained.

15.3.2 The airflow switch or transducer shall open the interlock circuit when the airflow falls 25 percent below the system's normal operating flow or 10 percent below its listed minimum rating, whichever is lower.

15.3.3 The airflow switch or transducer shall be a manual reset device or circuit.

15.4 Surface Materials. Any surface located directly above the cooking appliance shall be of noncombustible or limited-combustible materials.

Annex A Explanatory Material

Annex A is not a part of the requirements of this NFPA document but is included for informational purposes only. This annex contains explanatory material, numbered to correspond with the applicable text paragraphs.

A.1.1.1 These requirements include, but are not limited to, all manner of cooking equipment, exhaust hoods, grease removal devices, exhaust ductwork, exhaust fans, dampers, fire-extinguishing equipment, and all other auxiliary or ancillary components or systems that are involved in the capture, containment, and control of grease-laden cooking effluent.

A.1.1.4 This judgment should take into account the type of cooking being performed, items being cooked, and the frequency of cooking operations. Examples of operations that might not require compliance with this standard include the following:

(1) Day care centers warming bottles and lunches
(2) Therapy cooking facilities in health care
(3) Churches and meeting operations that are not cooking meals that produce grease-laden vapors
(4) Employee break rooms where food is warmed

Copyright National Fire Protection Association
Provided by IHS under license with NFPA
No reproduction or networking permitted without license from IHS
Not for Resale

A.1.3.1 This standard cannot provide safe design and operation if parts of it are not enforced or are arbitrarily deleted in any application.

A.3.2.1 Approved. The National Fire Protection Association does not approve, inspect, or certify any installations, procedures, equipment, or materials; nor does it approve or evaluate testing laboratories. In determining the acceptability of installations, procedures, equipment, or materials, the authority having jurisdiction may base acceptance on compliance with NFPA or other appropriate standards. In the absence of such standards, said authority may require evidence of proper installation, procedure, or use. The authority having jurisdiction may also refer to the listings or labeling practices of an organization that is concerned with product evaluations and is thus in a position to determine compliance with appropriate standards for the current production of listed items.

A.3.2.2 Authority Having Jurisdiction (AHJ). The phrase "authority having jurisdiction," or its acronym AHJ, is used in NFPA documents in a broad manner, since jurisdictions and approval agencies vary, as do their responsibilities. Where public safety is primary, the authority having jurisdiction may be a federal, state, local, or other regional department or individual such as a fire chief; fire marshal; chief of a fire prevention bureau, labor department, or health department; building official; electrical inspector; or others having statutory authority. For insurance purposes, an insurance inspection department, rating bureau, or other insurance company representative may be the authority having jurisdiction. In many circumstances, the property owner or his or her designated agent assumes the role of the authority having jurisdiction; at government installations, the commanding officer or departmental official may be the authority having jurisdiction.

A.3.2.4 Listed. The means for identifying listed equipment may vary for each organization concerned with product evaluation; some organizations do not recognize equipment as listed unless it is also labeled. The authority having jurisdiction should utilize the system employed by the listing organization to identify a listed product.

A.3.3.4 Appliance Flue Outlet. There might or might not be ductwork attached to the opening(s).

A.3.3.9 Certified. Certification can be provided by the manufacturer of the listed equipment being serviced or an independent third party.

A.3.3.13 Construction. See Figure A.3.3.13.

A.3.3.14 Continuous Weld. Welding is a fabrication technique for joining metals by heating the materials to the point that they melt and flow together to form an uninterrupted surface of no less strength than the original materials.

For the purpose of the definition, it specifically includes the exhaust compartment of hoods and welded joints of exhaust ducts yet specifically does not include filter support frames or appendages inside hoods.

A.3.3.23.2 Solid Fuel Cooking Equipment. This equipment includes ovens, tandoori charcoal pots, grills, broilers, rotisseries, barbecue pits, or any other type of cooking equipment that derives all or part of its heat source from the burning of solid cooking fuel.

A.3.3.24.1 Grease Filter. Filters are expected to minimize the projection of flames downstream when attacked by flame on the upstream side and are expected to maintain their strength, shape, and integrity when exposed to the anticipated rough handling, cleaning, and service found in the field.

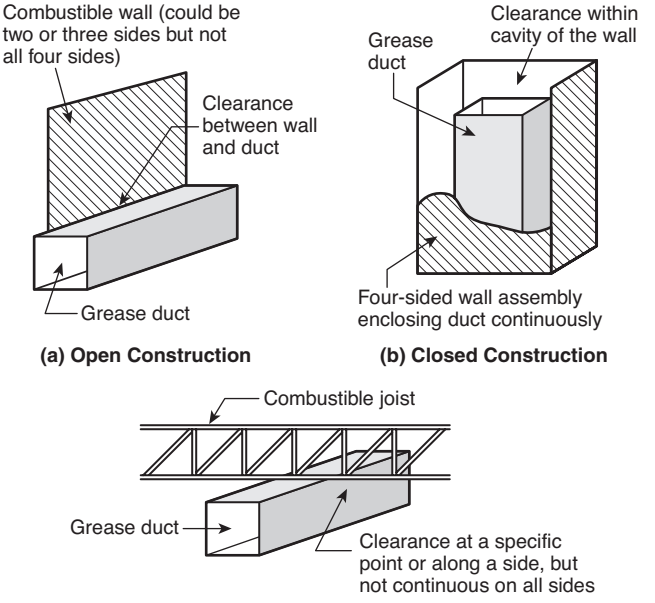

FIGURE A.3.3.13 Examples of Open and Closed Combustible Construction.

A.3.3.24.2 Mesh-Type Filter. This type of filter is not tested, listed, or acceptable for commercial cooking operations due to the increased fire hazard. *(See 3.3.24.1, Grease Filter.)*

A.3.3.29 Grease. Grease might be liberated and entrained with exhaust air or might be visible as a liquid or solid.

A.3.3.33 Hood. *Hoods* as used in this document are often referred to as Type I hoods, meaning those applied to grease exhaust applications. They are built in various styles, for example, single- or double-island canopy, wall-mounted canopy, noncanopy, backshelf, high sidewall, eyebrow, and pass-over style. All such type and style hoods are applicable to this document provided they meet all the material and performance requirements of this document. *(See Figure A.3.3.33.)*

The following are types of hoods:

(1) *Type I.* Hoods designed for grease exhaust applications.
(2) *Type II.* Hoods designed for heat and steam removal and other nongrease applications. These hoods are not applicable to the standard.

A.3.3.36 Material. Materials subject to increase in combustibility or flame spread index beyond the limits herein established through the effects of age, moisture, or other atmospheric condition should be considered combustible. See Table A.3.3.36.

A.3.3.36.3 Noncombustible Material. Materials that are reported as passing ASTM E 136 should be considered noncombustible materials.

A.3.3.48 Trained. Formal and/or technical training can be administered by the employer or a recognized training program.

A.4.1.1.1 See UL 710B.

--`,,```,,,,````-`-`,,`,,`,`,,`---

Copyright National Fire Protection Association
Provided by IHS under license with NFPA
No reproduction or networking permitted without license from IHS
Not for Resale

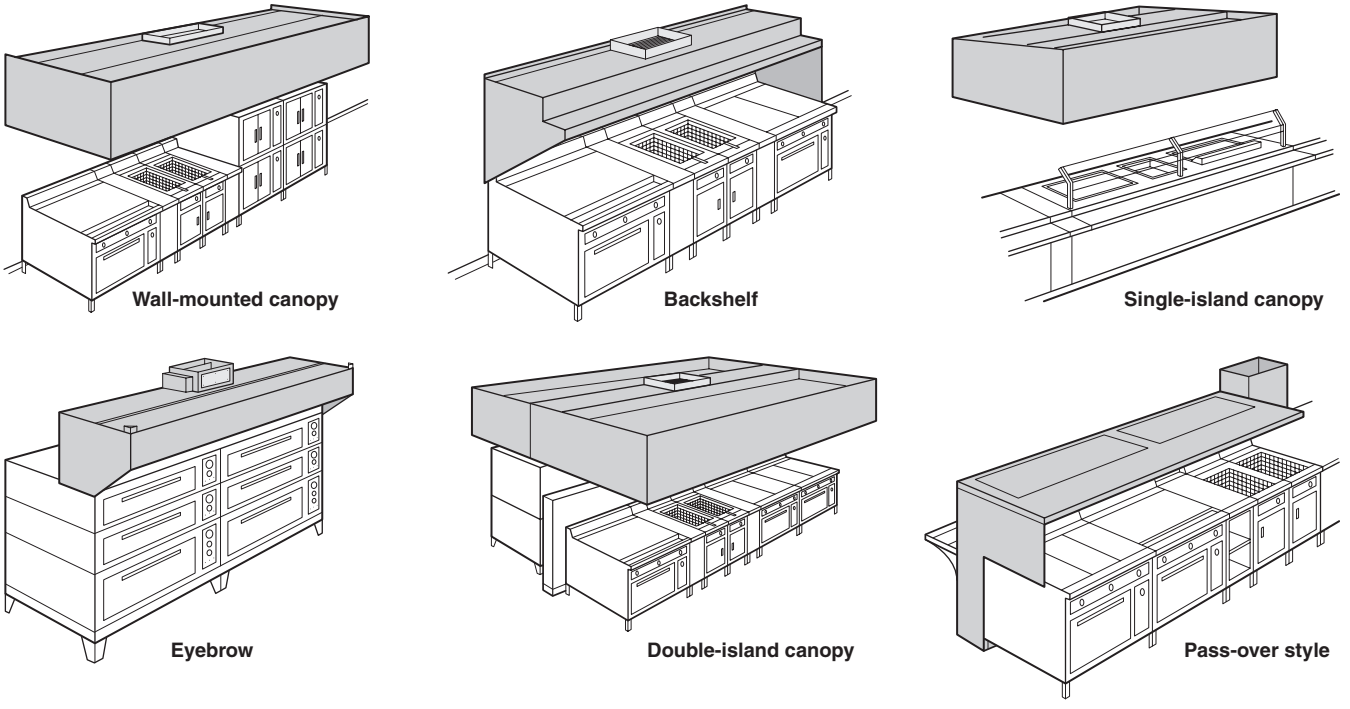

FIGURE A.3.3.33 Styles of Hoods.

Table A.3.3.36 Types of Construction Assemblies Containing Noncombustible, Limited-Combustible, and Combustible Materials

Type of Assembly	Classifications for Determining Hood and Grease Duct Clearance*		
	Non-combustible	Limited-Combustible	Combustible
Wall assemblies			
Brick, clay tile, or concrete masonry products	X		
Plaster, ceramic, or quarry tile on brick, clay tile, or concrete masonry products	X		
Plaster on metal lath on metal studs	X		
Gypsum board on metal studs		X	
Solid gypsum board†		X	
Plaster on wood or metal lath on wood studs			X
Gypsum board on wood studs			X
Plywood or other wood sheathing on wood or metal studs			X
Floor–ceiling or roof–ceiling assemblies			
Plaster applied directly to underside of concrete slab	X		
Suspended membrane ceiling			
With noncombustible mineral wool acoustical material	X		
With combustible fibrous tile			X
Gypsum board on steel joists beneath concrete slab		X	
Gypsum board on wood joists			X

Notes:
(1) Wall assembly descriptions assume same facing material on both sides of studs.
(2) Categories are not changed by use of fire-retardant-treated wood products.
(3) Categories are not changed by use of Type X gypsum board.
(4) See definitions in 3.3.36 of *combustible material*, *limited-combustible material*, and *noncombustible material*.
*See clearance requirements in Section 4.2.
†Solid gypsum walls and partitions, 50.8 mm (2 in.) or 57.15 mm (2¼ in.) thickness, are described in the Gypsum Association publication *Fire Resistance Design Manual*.

Copyright National Fire Protection Association
Provided by IHS under license with NFPA
No reproduction or networking permitted without license from IHS
Not for Resale

A.4.1.6 When solid fuel is burned in cooking operations, increased quantities of carbon, creosote, and grease-laden vapors are produced that rapidly contaminate surfaces, produce airborne sparks and embers, and are subject to significant flare-ups. Also, solid fuel cooking requires fuel storage and handling and produces ash that requires disposal. For these reasons, solid fuel cooking operations should comply with Chapter 14.

A.4.1.9 The authority having jurisdiction can exempt temporary facilities, such as a tent, upon evaluation for compliance to the applicable portions of this standard.

Although it might not be practical to enforce all requirements of this standard in temporary facilities, the authority having jurisdiction should determine that all necessary provisions that affect the personal safety of the occupants are considered.

A.4.2 See Figure A.4.2(a) through Figure A.4.2(g) for clarification of the appropriate clearances required in Section 4.2.

A.4.2.4.2 The intent of this paragraph is to maintain the systems and their function in accordance with the requirements of the edition of NFPA 96 under which the systems were designed and installed.

A.4.3.2 Protection should be steel outer casing [minimum 0.46 mm (0.018 in.) thick] or equivalent.

A.5.1.4 Welding is one acceptable method.

A.5.3.4 Figure A.5.3.4 provides examples of exhaust hood assemblies with integrated supply air plenums.

A.5.4 Examples of acceptable materials for hoods include steel and stainless steel.

Additionally, many health officials prohibit galvanized steel in hoods, as does NSF/ANSI 2.

A.6.2.2.1 Appliances that produce high flue gas temperatures include deep-fat fryers, upright or high broilers, and salamander broilers.

A.7.1.2 Vertical or substantially pitched ducts are preferred over horizontal ducts because of their capacity to drain grease and to transfer heated vapors more rapidly to the exterior of a building.

A.7.5.1 Examples of acceptable materials for ducts include the following:

(1) Steel
(2) Galvanized steel
(3) Stainless steel

A.7.7.2.2 Noncombustible materials such as reinforced concrete floors or protected steel beams, which might protrude into an enclosure and cause reduced clearance, can be permitted by the authority having jurisdiction if the installation and accessibility of the duct system are considered adequate.

A.7.8 It is preferable for the fan to be at or as close as possible to the end of the duct to minimize the number of pressurized duct joints and clean-outs through which grease might leak more easily.

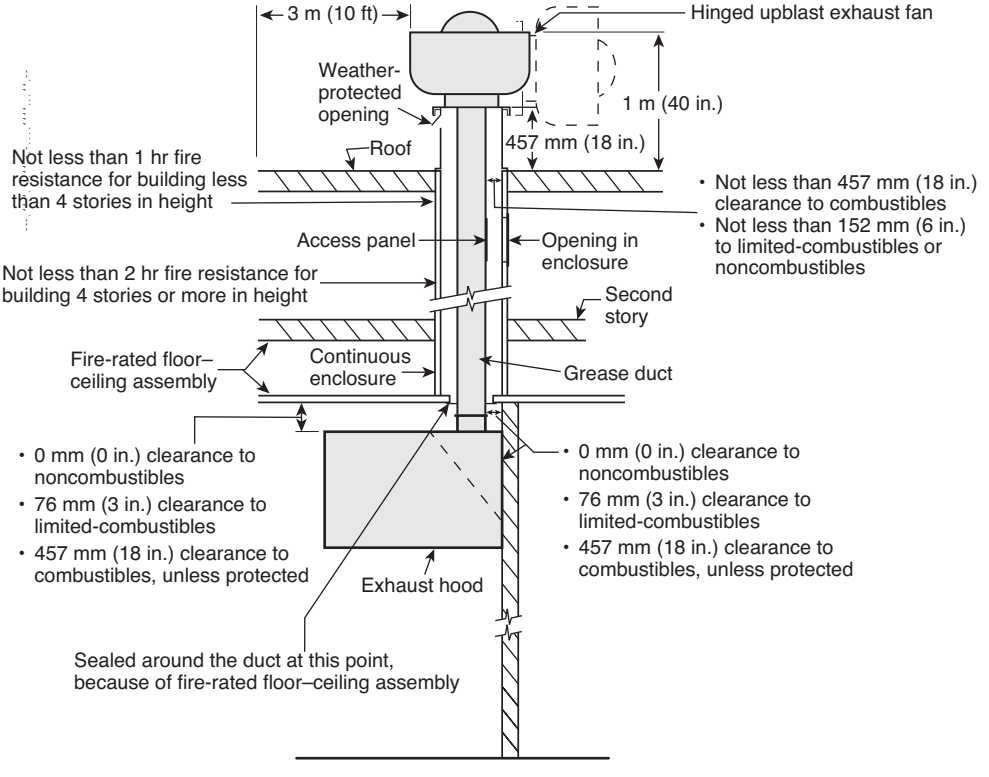

FIGURE A.4.2(a) Typical Section View for Building with Two Stories or More with Fire-Rated Floor–Ceiling Assembly.

Copyright National Fire Protection Association
Provided by IHS under license with NFPA
No reproduction or networking permitted without license from IHS
Not for Resale

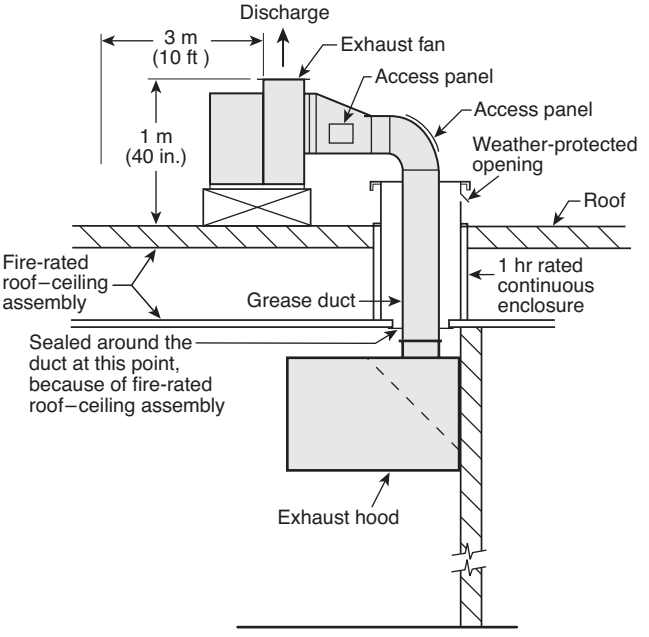

FIGURE A.4.2(b) Typical Section View for One-Story Building with Fire-Rated Roof–Ceiling Assembly. (Clearance notes in Figure A.4.2(a) apply also to this drawing.)

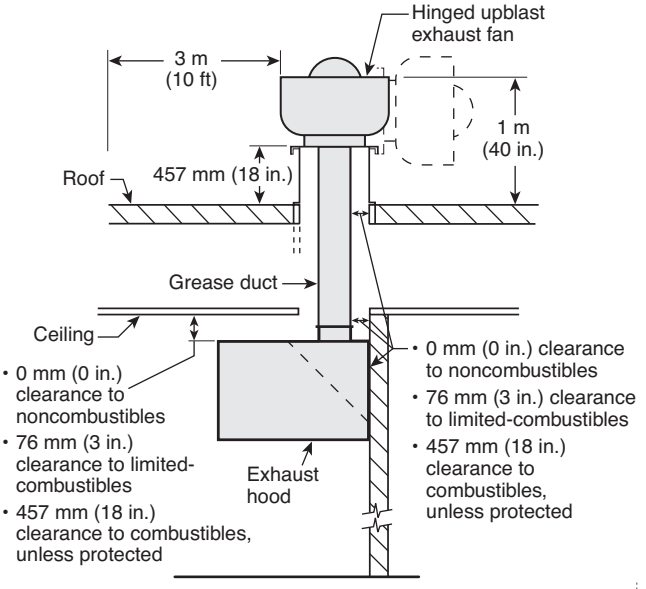

Note: Enclosure is not required in 1-story building where roof ceiling assembly does not have a fire resistance rating.

FIGURE A.4.2(d) Typical Section View for One-Story Building Without Fire-Rated Roof–Ceiling Assembly.

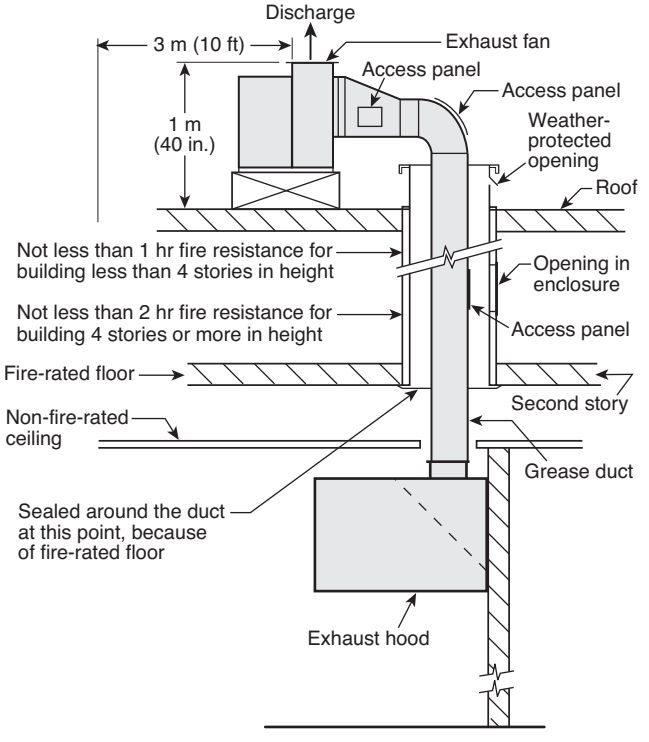

FIGURE A.4.2(c) Typical Section View for Building with Two Stories or More with Non-Fire-Rated Ceiling and Fire-Rated Floor. (Clearance notes in Figure A.4.2(a) apply also to this drawing.)

Wherever possible and practicable, the termination of an exhaust system should be above a roof. Fans on walls should be used only when absolutely necessary, because of the many problems encountered, such as contaminated air lowering environmental quality in traveled or public areas by recirculating through air intakes; operable windows' accessibility to vandalism and accidental damage; and strong wind currents restricting airflow.

A.7.8.1(1) It is preferable for the fan to be at or as close to the end of the duct as possible to minimize the number of pressurized duct joints and clean-outs through which grease might leak more easily.

A.7.8.2.2 Both types of fan terminations should be accessible as follows:

(1) *Rooftop Terminations.* All roof exhaust fans (whether through the roof or to the roof from outside) should have ready access to all sides from a flat roof surface without a ladder, or they should be provided with safe access via built-in stairs, a walkway, or a portable ladder to a flat work surface on all sides of the fan. *(See 7.8.2.)*

(2) *Wall Terminations.* All through-the-wall exhaust fans should have ready access from the ground from no more than a 2 m (6 ft) stepladder or should be provided with a flat work surface under the fan that allows for access to all sides of the fan from no more than a 6 m (20 ft) extension ladder. *(See 7.8.3.)*

A.7.8.4 Figure A.7.8.4 is an example of a rooftop termination for a duct traveling up the exterior of the building after penetrating a wall.

A.8.1.1 An upblast exhaust fan is popular due to its low cost and ease of installation and is common in one- or two-story freestanding restaurants. The fan housing typically is made of spun aluminum. The motor and the belt drive are outside the airstream. See Figure A.8.1.1 for an example.

Copyright National Fire Protection Association
Provided by IHS under license with NFPA
No reproduction or networking permitted without license from IHS
Not for Resale

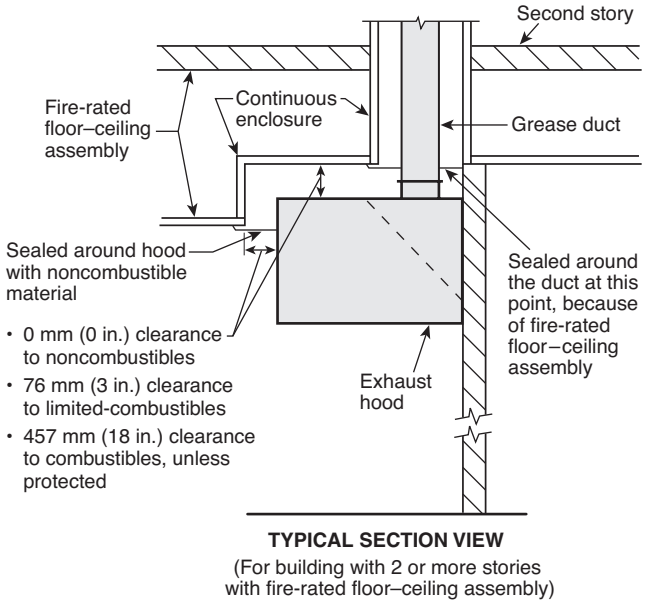

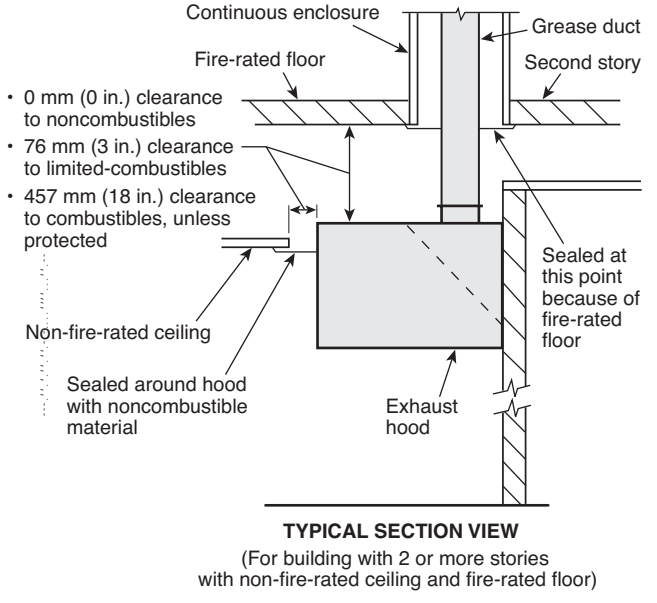

FIGURE A.4.2(e) Detail Drawings Showing Hoods Penetrating Ceilings.

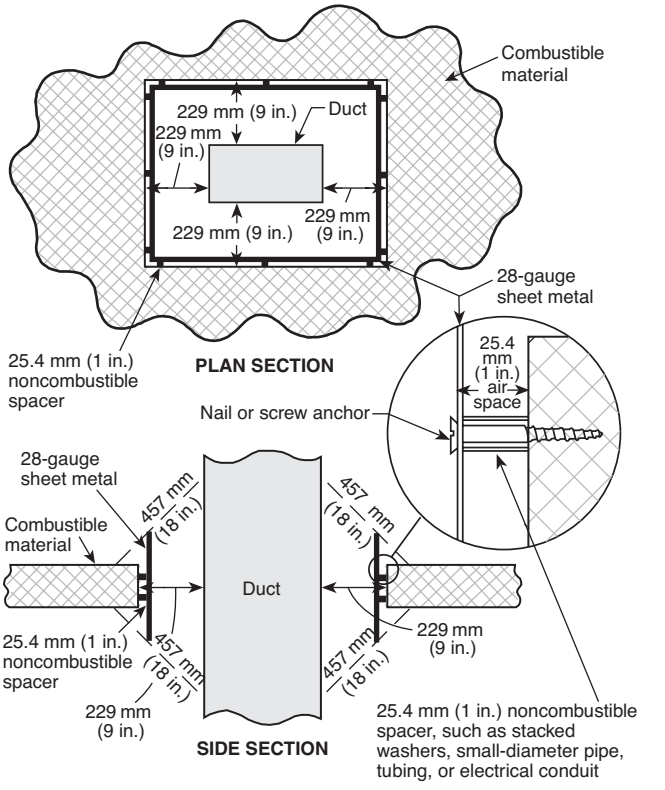

FIGURE A.4.2(f) Example of Clearance Reduction System: 229 mm (9 in.) Clearance to Combustible Material.

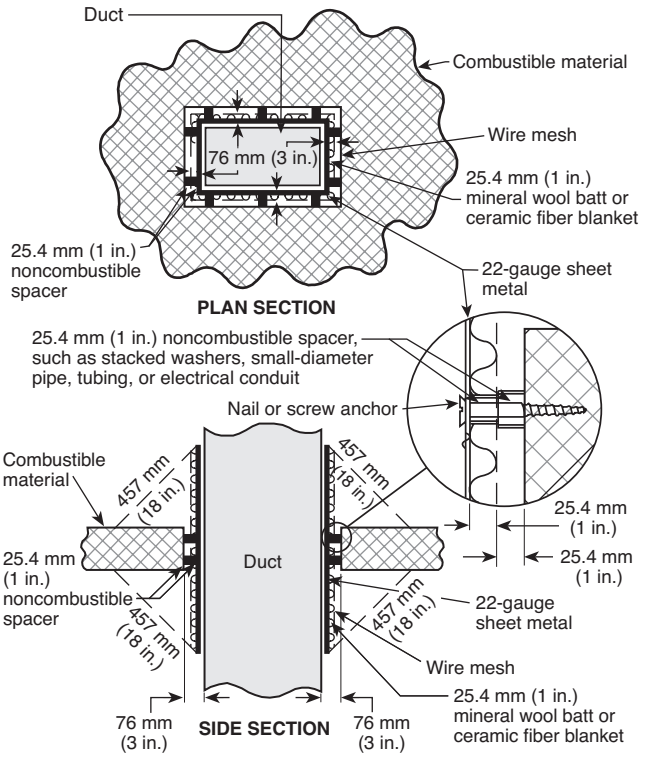

FIGURE A.4.2(g) Example of Clearance Reduction System: 76 mm (3 in.) Clearance to Combustible Material.

Copyright National Fire Protection Association
Provided by IHS under license with NFPA
No reproduction or networking permitted without license from IHS
Not for Resale

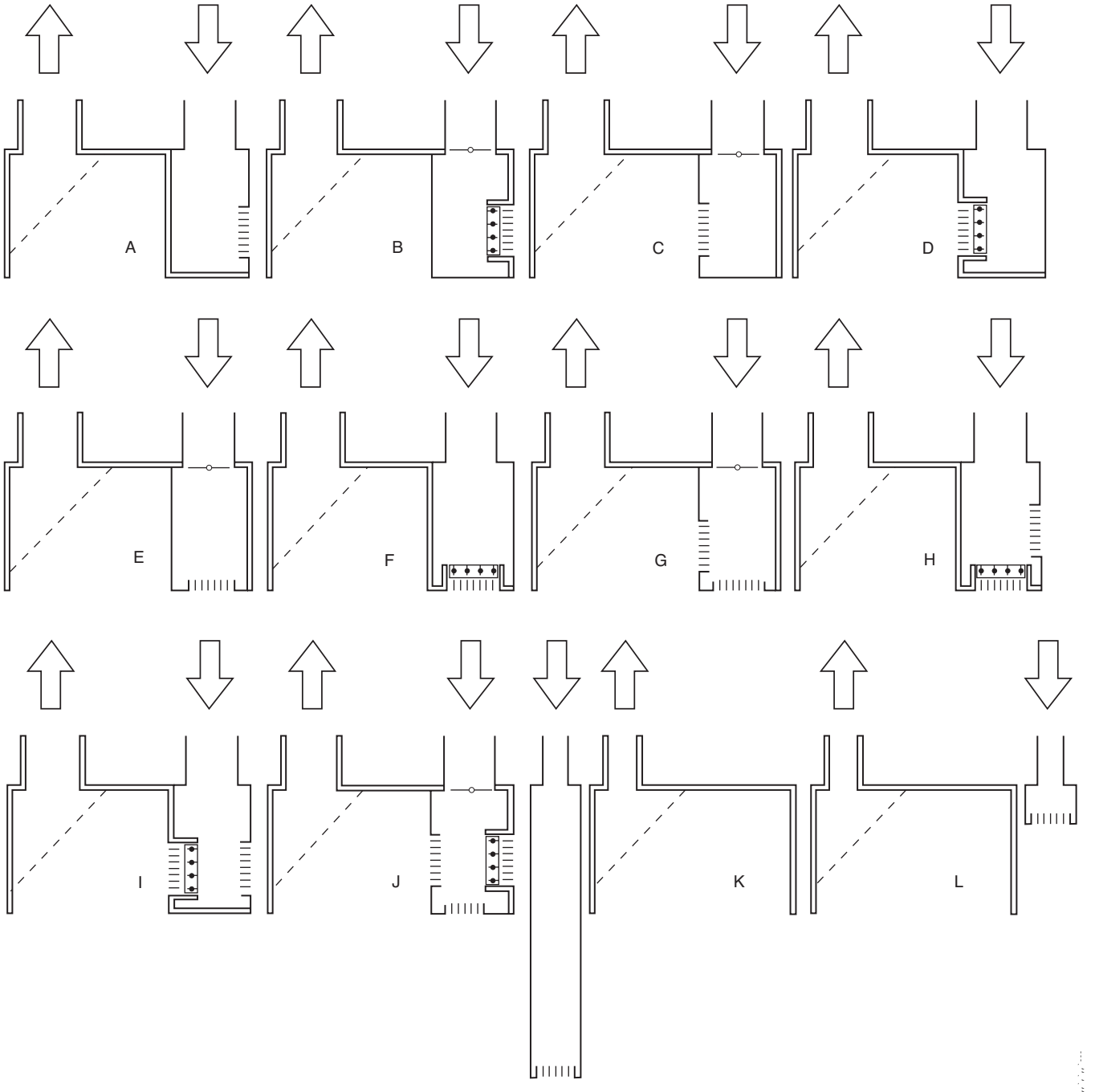

FIGURE A.5.3.4 Examples of Exhaust Hood Assemblies with Integrated Supply Air Plenums.

Copyright National Fire Protection Association
Provided by IHS under license with NFPA
No reproduction or networking permitted without license from IHS
Not for Resale

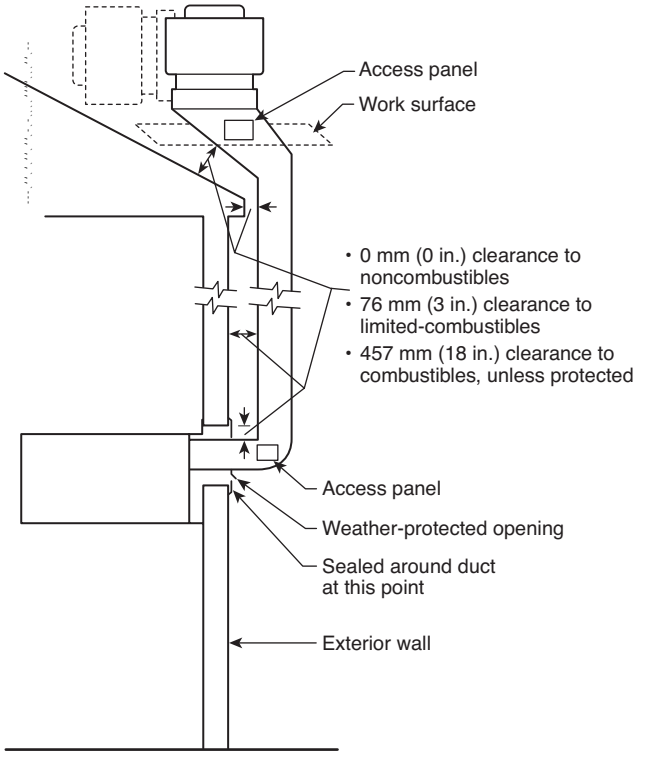

FIGURE A.7.8.4 Rooftop Terminations Through Combustible or Limited-Combustible Walls.

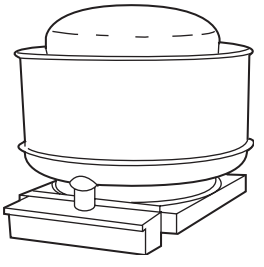

FIGURE A.8.1.1 Typical Upblast Fan.

A.8.1.2 Figure A.8.1.2 shows an in-line fan, which normally is used where space is not available for a utility set fan. It typically is located in a horizontal duct run in the false ceiling (interstitial) space.

A.8.1.3 See Figure A.8.1.3 for an example of an utility set fan. This type of fan generally is used for large exhaust systems such as found in hotels, hospitals, and prisons, or in restaurants located in high-rise buildings. It typically is mounted on the roof but sometimes is located in a mechanical room.

A.8.2.1.1 ASHRAE Research Project 1033-RP Final Report, "Effects of air velocity on grease deposition in exhaust ductwork," documented that grease deposition is reduced as air velocity is reduced, primarily due to less turbulence at the duct surface. Tests were performed at velocities of 500 fpm, 1000 fpm, 1500 fpm, and 2000 fpm. The 500 fpm velocity

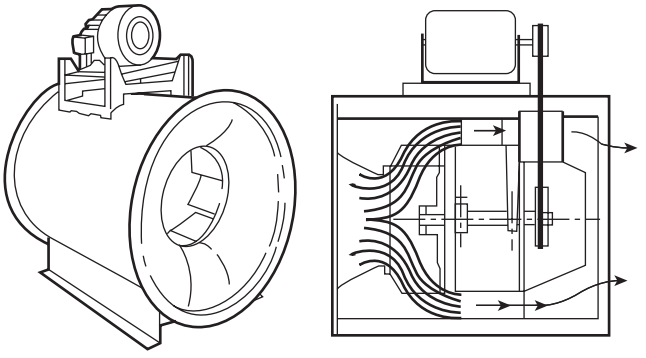

FIGURE A.8.1.2 In-Line Fan.

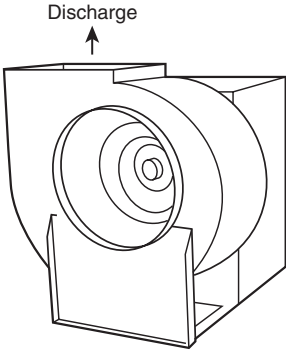

FIGURE A.8.1.3 Typical Utility Set Fan.

maintains or improves the safety aspect of minimizing grease buildup, while allowing engineers more flexibility in both retrofit and new kitchen design that include variable flow kitchen exhaust systems. According to the report, grease deposition in uninsulated ducts exposed to cold outdoor climates can increase with lower duct velocities, and insulation of R10 or greater was recommended.

A.8.3 It is not advisable to discontinue the use of replacement air systems during cooking operations. Exhaust function, indoor pollution, indoor comfort, and grease removal, for example, will be adversely affected.

A.8.4.1 See Figure A.8.4.1.

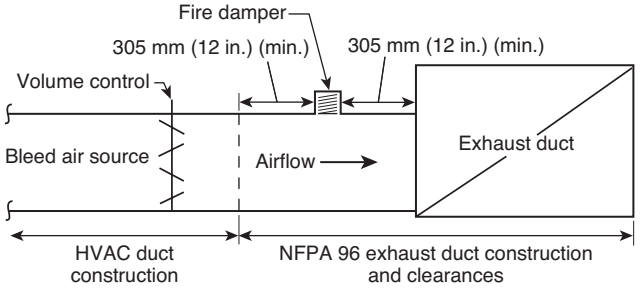

FIGURE A.8.4.1 System for Introducing Bleed Air into a Master Exhaust Duct.

Copyright National Fire Protection Association
Provided by IHS under license with NFPA
No reproduction or networking permitted without license from IHS
Not for Resale

A.9.2.4 All wiring should be designed, specified, and installed with due regard to the effects of heat, vapor, and grease on the equipment.

A.10.1.2 Examples of cooking equipment that produce grease-laden vapors include, but are not limited to, appliances such as deep-fat fryers, ranges, griddles, broilers, woks, tilting skillets, and braising pans.

A.10.2.3 UL 300 primarily addresses the method of fire testing for self-contained chemical extinguishing systems commonly referred to as pre-engineered systems. UL 300 has been identified as a baseline for testing fire-extinguishing systems intended for the protection of commercial cooking–related hazards. Additional equivalent testing standards can and have been written for other types of fire-extinguishing systems not considered pre-engineered that demonstrate equivalent fire testing severity to the UL 300 test standard. Current examples include, but are not limited to, UL 199, UL Subject 199B, UL Subject 199E, and UL 710B.

A.10.2.10(4) An approved weekly recorded inspection could consist of a log of entries that would display the date and time of the inspection and the initials of the person(s) conducting the visual inspection. Attaching the log to a clipboard and mounting it near the valve in question serves as a convenient reminder of the need to conduct the inspection.

A.10.9.2 Although training and qualification might be available elsewhere, the manufacturer of the equipment being installed should be considered an appropriate source of training and qualification.

A.10.10.1 The system used to rate extinguishers for Class B fires (flammable liquids in depth) does not take into consideration the special nature of heated grease fires. Cooking-grease fires are a special hazard requiring agents that saponify (make a soap foam layer to seal the top surface of the grease) for this application.

A.11.2.1 It is recommended that such training and qualification be performed by the manufacturer of the equipment being inspected and serviced. The various electrical, mechanical, and filtration components of the systems should be inspected and tested as required to ensure that they continue to function according to original design.

A.11.2.4 The date of manufacture marked on fusible metal alloy sensing elements does not limit when they can be used. These devices have unlimited shelf life. The intent of 11.2.4 is to require semiannual replacement of fusible metal alloy sensing elements that have been installed in environments that subject them to contaminant loading, such as grease in restaurant hoods and ducts, that could adversely affect their proper operation.

A.11.3.3 See A.11.2.4.

A.11.4 The primary focus of an inspection for cleanliness is to establish whether the volume of grease buildup within the exhaust system warrants cleaning and to determine whether adequate access is available throughout the exhaust system to remove the grease buildup.

A.11.6.2 Hoods, grease removal devices, fans, ducts, and other appurtenances should be cleaned to remove combustible contaminants to a minimum of 50 µm (0.002 in.).

When to clean: A measurement system of deposition should be established to trigger a need to clean, in addition to a time reference based on equipment emissions.

The method of measurement is a depth gauge comb, shown in Figure A.11.6.2, which is scraped along the duct surface. For example, a measured depth of 2000 µm (0.078 in.) indicates the need to remove the deposition risk. The system would also include point measurement in critical areas. For example, 3175 µm (0.125 in.) in a fan housing requires cleaning.

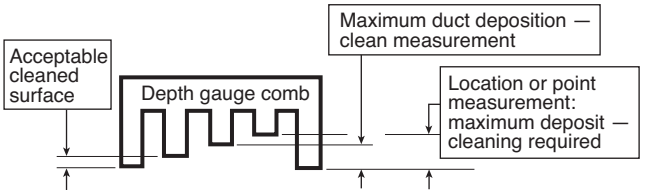

FIGURE A.11.6.2 Depth Gauge Comb.

A.12.1.2.2 The effectiveness of an automatic extinguishing system is affected by the placement of the nozzles. For this reason, it is essential that cooking appliances be situated in the area in which they were when the extinguishing equipment was designed and installed. If an appliance is moved from under the equipment for cleaning or any other reason, it should be returned to its original position prior to initiating a cooking operation.

When appliances are on wheels or casters for ease of cleaning, it is important that the appliance be placed in its design position to ensure that the fire-extinguishing system will be effective. An approved method should ensure that the appliance is returned to its appropriate position before cooking takes place. Channels, markings, or other approved methods assist in ensuring proper placement.

A.14.2.2 The space or room should be of ample size to permit adequate circulation of heated air.

A.14.7.8 The 2-A rated water spray fire extinguisher is equipped with a nozzle that does not produce a straight stream. Water-type extinguishers are not allowed in the kitchen according to 10.10.2 because they do not saponify upon contact with grease. However, 2-A rated water type extinguishers are allowed to be used for solid fuel cooking in appliances with fireboxes of 0.14 m^3 (5 ft^3) volume or less. Tests have demonstrated that water-type extinguishers utilizing a solid stream discharge pattern can be a safety concern in certain types of fires, such as a fryer fire.

A.15.1 See Figure A.15.1, which shows a typical down draft system arrangement.

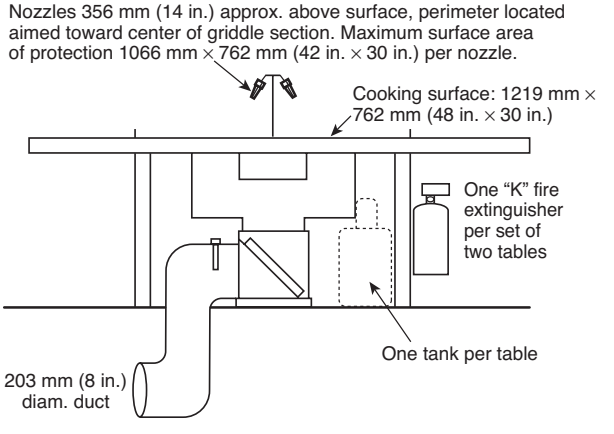

FIGURE A.15.1 Typical Down Draft System Arrangement.

Copyright National Fire Protection Association
Provided by IHS under license with NFPA
No reproduction or networking permitted without license from IHS
Not for Resale

Annex B Informational References

B.1 Referenced Publications. The documents or portions thereof listed in this annex are referenced within the informational sections of this standard and are not part of the requirements of this document unless also listed in Chapter 2 for other reasons.

B.1.1 NFPA Publications. (Reserved)

B.1.2 Other Publications.

B.1.2.1 ASHRAE Publications. American Society of Heating, Refrigerating and Air Conditioning Engineers, Inc., 1791 Tullie Circle, N.E., Atlanta, GA 30329-2305.

Kuehn, T. H., et al., "Effects of air velocity on grease deposition in exhaust ductwork," ASHRAE Research Project, 1033-RP Final Report. Minneapolis: University of Minnesota, 2006.

B.1.2.2 ASTM Publications. ASTM International, 100 Barr Harbor Drive, P.O. Box C700, West Conshohocken, PA 19428-2959.

ASTM E 136, *Standard Test Method for Behavior of Materials in a Vertical Tube Furnace at 750°C*, 1993.

B.1.2.3 Gypsum Association Publications. Gypsum Association, 810 First Street, NE, Suite 510, Washington, DC 20002.

Fire Resistance Design Manual, 1992.

B.1.2.4 NSF International Publications. NSF International, P.O. Box 130140, 798 N. Dixboro Road, Ann Arbor, MI 48113-01402.

NSF/ANSI 2, *Food Equipment*, 2003.

B.1.2.5 UL Publications. Underwriters Laboratories Inc., 333 Pfingsten Road, Northbrook, IL 60062-2096.

UL 199, *Standard for Automatic Sprinklers for Fire-Protection Service*, 2005.

UL 300, *Standard for Fire Testing of Fire Extinguishing Systems for Protection of Restaurant Cooking Areas*, 1996.

UL 710B, *Standard for Recirculating Systems*, 2004.

UL Subject 199B, *Outline of Investigation for Control Cabinets for Automatic Sprinkler Systems Used for Protection of Commercial Cooking Equipment*, 2006.

UL Subject 199E, *Outline of Investigation for Fire Testing of Sprinklers and Water Spray Nozzles for Protection of Deep Fat Fryers*, 2004.

B.2 Informational References. The following documents or portions thereof are listed here as informational resources only. They are not a part of the requirements of this document.

Ackland, P., *Inspection Manual for Commercial Kitchen Exhaust Systems*, 2001. ISBN 0-968160-4-6. Phil Ackland, P.O. Box 856, Summerland, BC V0H 1Z0.

Ackland, P., *Kitchen Exhaust Cleaning and Certification Manual*, 2003. ISBN 0-9681760-70. Phil Ackland, P.O. Box 856, Summerland, BC V0H 1Z0.

American Society of Heating, Refrigerating and Air-Conditioning Engineers, "Kitchen Exhaust," Chapter 30 in *Heating, Ventilating, and Air-Conditioning Applications*. Atlanta: ASHRAE, 1999.

Carson, W. G., and R. L. Klinker, *Fire Protection Systems, Inspection, Test & Maintenance Manual*, 3rd edition, Quincy, MA: NFPA, 2000.

Cote, A. E., ed., "Ventilation of Commercial Cooking Operations," Chapter 12.9 in *Fire Protection Handbook*, 19th edition, Quincy, MA: NFPA, 2003.

Gerstler, W. D., "New Rules for Kitchen Exhaust," *ASHRAE Journal*, November 2002: 26–33.

Solomon, R. E., ed., "Protection of Commercial Cooking Equipment," Chapter 55 in *Fire and Life Safety Inspection Handbook*, 8th edition, Quincy, MA: NFPA , 2002.

"Using Extinguishers in Commercial Kitchens." National Fire Protection Association video, VC72VH, Quincy, MA: NFPA, 2002.

B.3 References for Extracts in Informational Sections. (Reserved)

Copyright National Fire Protection Association
Provided by IHS under license with NFPA
No reproduction or networking permitted without license from IHS
Not for Resale

Index

Copyright © 2007 National Fire Protection Association. All Rights Reserved.

The copyright in this index is separate and distinct from the copyright in the document that it indexes. The licensing provisions set forth for the document are not applicable to this index. This index may not be reproduced in whole or in part by any means without the express written permission of NFPA.

-A-

Access panels 7.1.6, 7.4.3, 7.4.4.2, 11.6.9, 11.6.10
Definition 3.3.1
Accessible, easily (definition) 3.3.21
Airflow 8.2, 11.6.11, A.8.2.1.1
Airflow switch 13.3.5, 15.3
Air intakes 7.8.3, A.7.8
Definition 3.3.2
Air movement ..... Chap. 8
Airflow 8.2, A.8.2.1.1
Common duct (manifold) systems 8.4, A.8.4.1
Down draft appliance ventilation systems ..... 15.1.1(6)
Exhaust fans for ..... *see* Exhaust fans
Multiple tenants, master duct systems for 8.4, A.8.4.1
Recirculating systems ..... 13.1(4)
Replacement air ..... *see* Replacement air
Solid fuel cooking equipment 14.6
Air pollution control devices 9.3, 11.1.7, 11.1.8
Definition 3.3.3
Air velocity 8.2.1, A.8.2.1.1
Air volume 8.2.2
Alarm signaling equipment 10.6, 10.7
Appliance flue outlet 6.2.2.1, 13.2.2, A.6.2.2.1
Definition 3.3.4, A.3.3.4
Application of standard 1.3, A.1.3.1
Approved (definition) 3.2.1, A.3.2.1
Appurtenance (definition) 3.3.5
Authority having jurisdiction (definition) 3.2.2, A.3.2.2
Automatic (definition) 3.3.6
Auxiliary equipment ..... Chap. 9, 13.1(5), 15.1.1(7)

-B-

Baffle plates ..... 6.1.1, 6.2.2.2 to 6.2.2.4, 10.2.7.3, 12.1.2.5
Definition 3.3.7
Bleed air duct ..... *see* Ducts (duct systems)
Broilers, upright A.6.2.2.1
Definition 3.3.8.3

-C-

Certified (definition) 3.3.9, A.3.3.9
Classified (definition) 3.3.10
Clean(ing) 11.6, A.11.6.2
Access for 7.3, 7.4.2.1, 7.4.2.2, 7.4.4.1, 8.1.5
Definition 3.3.11
Recirculating systems ..... 13.6.2 to 13.6.4
Solid fuel cooking equipment 14.8
Clearances 4.2, A.4.2
Down draft appliance ventilation systems ..... 15.1.1(1)
Ducts ..... *see* Ducts (duct systems)
Enclosures 4.3.6, 4.5, 7.7.2.2, A.7.7.2.2
Exhaust fans 4.2.1, 8.1.5.2
Recirculating systems ..... 13.1(1), 13.2.12(3)
Solid fuel cooking equipment 14.9.1
Terminations 7.8.2.1
Clearly identified (definition) 3.3.12
Closed combustible construction ..... *see* Construction
Combustible material
Clearances 4.2.1, 4.2.4.4
Enclosures 7.7.2.2.1
Solid fuel cooking equipment ..... 14.9.1.4 to 14.9.1.6
Definition 3.3.36.1
Rooftop terminations through 7.8.4, A.7.8.4
Concealed/confined space ..... *see* Space
Construction
Closed combustible construction ..... 4.3.6(2)
Definition 3.3.13.1
Open combustible construction ..... 4.3.6(1)
Definition 3.3.13.2
Continuous enclosures ..... *see* Enclosures
Continuous weld 5.1.2, 7.5.2.1
Definition 3.3.14, A.3.3.14
Control device, high limit 12.2
Definition 3.3.32
Cooking equipment ..... 4.1, A.4.1.1.1 to A.4.1.9
Alterations to 4.7
Approval 12.1.1
Concessions 4.1.9, A.4.1.9
Exhaust systems ..... *see* Exhaust systems
Fire protection 10.1.2, 10.2.4, A.10.1.2
Installation 12.1.2, A.12.1.2.2
Moving 12.1.2.2, 12.1.2.3, A.12.1.2.2
Operating controls 12.2
Recirculating systems ..... 13.2.1 to 13.2.3, 13.2.5 to 13.2.7
Safety requirements ..... Chap. 12
Solid fuel ..... *see* Solid fuel cooking equipment
Cooking fuel, solid ..... *see* Solid cooking fuel

-D-

Dampers 9.1, 11.6.11
Definition 3.3.15
Fire-actuated
Exhaust hood assemblies 5.3.4, 7.3.4, 11.5, A.5.3.4
Inspection 11.2.2, 11.5
Recirculating systems ..... 13.2.8 to 13.2.10
Inspection 11.2.2, 11.5
Restriction of openings by 11.1.3
Definitions ..... Chap. 3
Detection devices ... 10.7.2, 10.7.4, 10.8.2, 11.2.2, 11.6.7, 15.2; *see also* Fusible links
Definition 3.3.16
Dips 7.1.4
Definition 3.3.17
Discharge (definition) ..... 3.3.18; *see also* Duct terminations
Doors, fire 7.7.4
Down draft appliance ventilation systems ..... Chap. 15
Draft ventilation systems
Down draft appliance ..... Chap. 15
Natural 14.1.1, 14.1.4
Ducts (duct systems) ..... 4.1.3(3), Chap. 7
Access panels ..... *see* Access panels
Bleed air ..... 8.4, A.8.4.1, Fig. A.8.4.1
Definition 3.3.20.1
Building and structural contact 4.4, 7.6.6
Cleaning 11.6.2, A.11.6.2
Clearance 4.2.1, 4.2.2, 4.2.4.4, 4.5, 7.2, 7.6.3, 7.7.2.2, A.7.7.2.2
Connections 7.5.2.1, 7.5.2.2, 7.5.5
Corrosion protection 4.4.2, 4.4.3, 7.6.6
Dampers in 9.1
Definition 3.3.20
Down draft appliance ventilation systems ..... 15.1.1(5)
Electrical equipment/wiring in 9.2.1, 9.2.2
Enclosures, clearances to 4.5

Copyright National Fire Protection Association
Provided by IHS under license with NFPA
No reproduction or networking permitted without license from IHS
Not for Resale

Fire protection 10.1.1, 10.2.4, 13.5.1, 14.7.3, 14.7.4
Grease
Definition 3.3.20.2
Listed 7.1.7, 7.4.3.4, 7.7.3.4
Rooftop terminations ..... 7.8.2.1(7)
Wall terminations ..... 7.8.3(6)
Other 7.5
Installation 7.5.2
Materials 7.5.1, A.7.5.1
Horizontal 7.4.1
Inspection 7.3.4, 7.3.7, 7.4.4.1, 7.7.3.3
Installation
Exterior 7.6
Interior 7.7, A.7.7.2.2
Master system for multiple tenants ..... 8.4, A.8.4.1, Fig. A.8.4.1
Multiple ducts in single enclosure 7.7.5.2
Openings 7.1.5, 7.3, 7.4, 11.1.3
Oven flue to hood 5.1.8.2
Penetrations 7.5.2.3, 7.5.3, 7.5.4
Solid fuel ..... 14.3.2 to 14.3.5, 14.4
Transition 8.2.1.2
Vertical 7.4.2
Duct terminations 7.8, A.7.8
Definition 3.3.19
Rooftop 7.8.2, 7.8.4, A.7.8, A.7.8.4
Wall 7.8.3, 14.4.4, A.7.8.2.2

-E-

Easily accessible (definition) 3.3.21
Electrical equipment and wiring 9.2, A.9.2.4
In cleaning 11.6.3, 11.6.12
Exhaust fans 8.1.6
Recirculating systems ..... 13.2.11, 13.2.12(4)
Electrostatic precipitators (ESP)
Cleaning 13.6.3
Fire-extinguishing system actuation device 13.5.2
Interlocks 13.3.4
Power supply 13.2.11
Enclosures, duct 4.3, A.4.3.2
Clearances 4.3.6, 4.5, 7.7.2.2, A.7.7.2.2
Continuous 7.7.1
Definition 3.3.22.1
Fire resistance rating 7.7.2.1
Factory-built grease 4.3, A.4.3.2
Clearances 4.3.6, 7.7.2.2.4, 7.7.2.2.5
Definition 3.3.22.2.1
Inspection 4.2.4.2, A.4.2.4.2
Interior installation 7.7.1.5
Field-applied grease 4.3, A.4.3.2
Clearances 4.3.6, 7.7.2.2.4, 7.7.2.2.5
Definition 3.3.22.2.2
Inspection 4.2.4.2, A.4.2.4.2
Interior installation 7.7.1.5
Fire resistance rating 7.7.2.1
Individual duct system for 7.7.5.1
Inspections 4.2.4.2, A.4.2.4.2
Multiple ducts in single 7.7.5.2
Openings 7.7.4
Protection of coverings and materials 7.7.3
Energy control equipment ..... 4.1.3(6)
Equipment ..... *see* Fire-extinguishing equipment; Solid fuel cooking equipment
Equivalency to standard 1.5
Exhaust cleaning service 11.6.13, 11.6.14
Exhaust fans ..... 4.1.3(4), 8.1, A.8.1.1 to A.8.1.3
Cleaning 7.3.7, 11.6.2, A.11.6.2
Clearance 4.2.1, 8.1.5.2
Housings 8.1.4
In-line ..... 8.1.2, Figs. 8.1.2.2(a) to (d), A.8.1.2, Fig. A.8.1.2
Openings for cleaning, servicing, and inspection 8.1.5
Operation with activated extinguishing system 8.2.3
Terminations ..... 7.8.1(1), A.7.8, A.7.8.1(1)
Rooftop 7.8.2.1, 7.8.2.2, 7.8.4, A.7.8.2.2, A.7.8.4
Wall ..... 7.8.3(7)
Upblast ..... 7.8.2.1(8), 8.1.1, 8.1.5.3, A.8.1.1
Utility set 8.1.3, A.8.1.3
Exhaust hoods ..... *see* Hoods
Exhaust systems ..... 4.1.1 to 4.1.5, A.4.1.1.1
Alterations to 4.7
Cleaning 11.6, A.11.6.2
Clearance 4.2, 4.5, A.4.2
Drawings 4.6
Inspection 11.4, A.11.4
Nonoperational 11.1.6
Operation ..... 11.1.1 to 11.1.3
Solid fuel cooking equipment ..... 14.1.3, 14.1.4, 14.3.2 to 14.3.5, 14.4, 14.6
Extinguishers, portable fire 10.2.1, 10.2.2, 10.10, A.10.10.1
Solid fuel cooking operations 14.7.8, 14.9.2.10, A.14.7.8

-F-

Factory-built grease duct enclosures ..... *see* Enclosures, duct
Fans, exhaust ..... *see* Exhaust fans
Field-built grease duct enclosures ..... *see* Enclosures, duct
Filters
Down draft appliance ventilation systems ..... 15.1.1(4)
Grease ..... 6.1, 6.2.3 to 6.2.5
Cleaning 13.6.2, 14.8.5
Definition 3.3.24.1, A.3.3.24.1
Fire protection 13.5.1
Interlocks 13.3.3, 13.3.5.1
Operation 11.1.7
Removed 11.1.2
Solid fuel cooking equipment 14.5.3
Mesh-type 6.1.3
Definition 3.3.24.2, A.3.3.24.2
Fire doors 7.7.4
Fire-extinguishing equipment ..... 4.1.3(5), Chap. 10; *see also* Extinguishers, portable fire
Air pollution control/secondary filtration equipment 9.3.3, 9.3.4
Cleaning process, care during 11.6.4, 11.6.5
Definition 3.3.23.1
Down draft appliance ventilation systems ..... 15.1.1(8), 15.2
Exhaust fan operation with 8.2.3
Fuel shutoff for 10.4
Hoods, sprinkler systems obstructed by 10.2.7.3, 10.8.1
Hose protection 14.7.9, 14.9.3.7
Inspection 11.2, 13.6.6, A.11.2.4
Installation requirements 10.9.2, A.10.9.2
Manual activation ..... 10.5, 11.1.4, 11.2.2, 13.5.4, 13.5.5, 15.2(4)
Nonoperational 11.1.6, 11.6.4, 11.6.5
Operating requirements 10.3
Portable 10.10, A.10.10.1
Recirculating systems ..... 13.1(6), 13.5, 13.6.1, 13.6.6
Review and certification 10.9, A.10.9.2
Simultaneous operation 10.3
Solid fuel cooking equipment 14.7, A.14.7.8
Solid fuel storage ..... 14.9.2.8 to 14.9.2.10
Special design and application 10.8
System annunciation 10.6
System supervision 10.7
Types of ..... 10.2, A.10.2.3, A.10.2.10(4)
Water supply ..... 10.2.8.4, 10.2.9, 10.2.10, A.10.2.10(4)
Water valve supervision ..... 10.2.10, A.10.2.10(4)
Water-wash, for fixed baffle hood ..... 10.2.8, 10.2.10, 10.7.4, 11.5, A.10.2.10(4)
Fire resistance rating 7.7.1, 7.7.2.1
Definition 3.3.25
Fire walls ..... 7.1.1, 7.7.1.1 to 7.7.1.3
Definition 3.3.26
Fryers, deep fat 12.1.2.4, 12.2, 13.6.1, 14.9.4.5, A.6.2.2.1

Copyright National Fire Protection Association
Provided by IHS under license with NFPA
No reproduction or networking permitted without license from IHS
Not for Resale

Fuel, solid cooking ..... *see* Solid cooking fuel
Fuel shutoff 10.4, 10.7.3
Fume incinerators 9.3.1, 9.3.2, 11.1.8
Definition 3.3.27
Fusible links 11.2.4, 11.2.5, 11.6.7, 15.2, A.11.2.4
Definition 3.3.28

-G-

Grease
Definition 3.3.29, A.3.3.29
Draining from/into traps ..... 7.8.2.1(4), 7.8.3(5)
Recirculating system, discharge from ..... 13.2.12(2)
Grease drip trays 6.2.4
Grease duct enclosures ..... *see* Enclosures, duct
Grease ducts ..... *see* Ducts (duct systems)
Grease filters ..... *see* Filters
Grease removal devices ..... Chap. 6; *see also* Filters
Cleaning 11.6.2, A.11.6.2
Clearance 4.2.1, 4.2.2
Definition 3.3.30
Down draft appliance ventilation systems ..... 15.1.1(3)
Fire protection 10.1.1, 10.2.4, 14.7.3, 14.7.4
Installation 6.2, A.6.2.2.1
Recirculating systems ..... 13.1(3)
Solid fuel cooking equipment 6.2.1.2, 14.5
Greasetight 5.1.4, 7.4.3.2, 7.5.2.3
Definition 3.3.31

-H-

Hazard area, single
Definition 3.3.42
Simultaneous system operation 10.3.1
High limit control device 12.2
Definition 3.3.32
Hoods ..... 4.1.3(2), Chap. 5
Access panels 7.3.4
Assemblies
Exhaust 5.3, A.5.3.4
Listed 5.4, A.5.4
Cleaning 11.6.2, 13.6.4, 14.8.5, A.11.6.2
Clearance 4.2.1, 4.2.2
Construction 5.1, 5.3, A.5.1.4, A.5.3.4
Definition 3.3.33, A.3.3.33
Down draft appliance ventilation systems ..... 15.1.1(2)
Exhaust air volumes 8.2.2.1
Eyebrow-type hoods 5.1.8
Fire protection 10.1.1, 10.2.4, 10.2.7, 10.2.8, 10.8.1, 14.7.3, 14.7.4
Fixed baffle (with water wash) ..... 10.2.8, 10.2.10, 10.7.4, 11.5, A.10.2.10(4)
Definition 3.3.33.1
Grease removal devices ..... *see* Grease removal devices
Inspection 11.2.1, 11.5
Insulation materials 5.1.9
Integrated supply air plenums 5.3, A.5.3.4
Lighting on 9.2.2, 9.2.3
Listed 5.1.6, 5.1.7, 11.1.5
Assembly 5.4, A.5.4
Inspection 11.2.1, 11.5
Ultraviolet hoods 5.5, 11.5
Ventilated ceiling technology 5.6
Maintenance 11.5
Modifications to 10.2.7
Recirculating systems ..... 13.1(2)
Size 5.2
Solid fuel cooking equipment 14.3
Spark arresters 14.1.6, 14.1.7, 14.8.4, 14.9.4.4
Types of A.3.3.33
Ultraviolet 5.5, 11.5
Hose protection 14.7.9, 14.9.3.7

-I-

Incinerators, fume 9.3.1, 9.3.2, 11.1.8
Definition 3.3.27
Inspection and testing A.11.2.1
Duct system 7.3.4, 7.3.7, 7.4.4.1, 7.7.3.3
Fire extinguishing equipment 11.2, A.11.2.4
Hoods 11.2.1, 11.5
Recirculating system 13.6.5
Solid fuel cooking equipment 11.7, 14.8
Insulation materials, hood 5.1.9
Interconnected
Definition 3.3.34
Fire-extinguishing systems, supervision of 10.7.3
Interlocks
Recirculating system ..... 13.2.12(5), 13.3, 13.6.5
Solid fuel cooking equipment 14.1.3, 14.6.3

-L-

Labeled (definition) 3.2.3
Lighting 9.2.2, 9.2.3
Limited-combustible material
Clearances 4.2.1, 4.2.3.3, 4.2.4.4
Enclosures 7.7.2.2.2
Solid fuel cooking equipment 14.9.1.5
Definition 3.3.36.2
Down draft appliance ventilation systems 15.4
Rooftop terminations through 7.8.4, A.7.8.4
Liquidtight
Connections 5.1.2, 7.5.2.1
Definition 3.3.35
Listed (definition) 3.2.4, A.3.2.4

-M-

Maintenance 11.2.8
Down draft appliance ventilation systems ..... 15.1.1(9)
Hoods 11.5
Recirculating systems ..... 13.1(7), 13.6
Solid fuel cooking equipment 11.7, 14.8
Makeup air ..... *see* Replacement air
Material (definition) ..... A.3.3.36; *see also* Combustible material; Limited-combustible material; Noncombustible material
Multiple-tenancy applications 4.1.7, 8.4, A.8.4.1

-N-

Noncombustible material
Clearances 4.2.1, 4.2.3, 4.2.4.3
Enclosures 7.7.2.2.2
Definition 3.3.36.3, A.3.3.36.3
Down draft appliance ventilation systems 15.4
Ducts, contact with 4.4.1
Solid fuel cooking equipment, installation of 14.9.1.1, 14.9.1.2

-O-

Open combustible construction ..... *see* Construction
Operating procedures 11.1
Down draft appliance ventilation systems ..... 15.1.1(9)
Recirculating systems ..... 13.1(7), 13.6
Solid fuel cooking equipment ..... Chap. 14

-P-

Pitched
Definition 3.3.37
Ducts A.7.1.2
Purpose of standard 1.2

-Q-

Qualified (definition) 3.3.38

Copyright National Fire Protection Association
Provided by IHS under license with NFPA
No reproduction or networking permitted without license from IHS
Not for Resale

-R-

Recirculating systems ..... Chap. 13
Application restrictions 13.4
Components 13.1
Cooking equipment ..... 13.2.1 to 13.2.3, 13.2.5 to 13.2.7
Definition 3.3.39
Design restrictions 13.2
Electrical wiring ..... 13.2.11, 13.2.12(4)
Fire safety requirements 13.5, 13.6.1, 13.6.6
Inspection and testing 13.6.5
Interlocks ..... 13.2.12(5), 13.3, 13.6.5
Location restrictions 13.4
Use and maintenance 13.6
References ..... Chap. 2, Annex B
Removable
Definition 3.3.40
Interlocks, recirculating system ..... 13.2.12(5)
Replacement air 8.3, A.8.3
Definition 3.3.41
Solid fuel cooking equipment 14.1.2, 14.6.2, 14.6.3
Retroactivity of standard 1.4
Rooftop terminations 7.8.2, 7.8.4, A.7.8, A.7.8.4

-S-

Safety requirements ..... Chap. 12
Down draft appliance ventilation systems ..... 15.1.1(10)
Recirculating systems ..... 13.1(8)
Solid fuel cooking equipment 14.9
Scope of standard 1.1, A.1.1.1, A.1.1.4
Shall (definition) 3.2.5
Should (definition) 3.2.6
Single hazard area
Definition 3.3.42
Simultaneous system operation 10.3.1
Solid cooking fuel
Ash removal 14.9.3
Definition 3.3.43
Handling 14.9.3
Storage 14.9.2
Solid fuel cooking equipment 4.1.6, A.4.1.6
Air movement for 14.6
Clearances 14.9.1
Definition 3.3.23.2, A.3.3.23.2
Duct systems ..... 14.3.2 to 14.3.5, 14.4
Exhaust systems ..... 14.1.3, 14.1.4, 14.3.2 to 14.3.5, 14.4, 14.6
Fire-extinguishing equipment 14.7, A.14.7.8
Grease removal devices 6.2.1.2, 14.5, 14.7.4
Hoods 14.3
Inspection and maintenance 11.7, 14.8
Location 14.2, A.14.2.2
Operating procedures ..... 11.7, Chap. 14
Replacement air 14.1.2, 14.6.2, 14.6.3
Safety requirements 14.9
Site-built equipment 14.9.4.3
Venting application 14.1
Solvents 11.4.6
Definition 3.3.44
Space
Concealed spaces ..... 7.7.1.1, 9.2.3.2 to 9.2.3.4
Definition 3.3.45.1
Confined space (definition) 3.3.45.2
Spark arresters 14.1.6, 14.1.7, 14.5.2, 14.8.4, 14.9.4.4
Definition 3.3.46
Standard (definition) 3.2.7
Supervisory alarms 10.7.1
Supply air plenums, integrated 5.3, A.5.3.4

-T-

Terminations, duct ..... *see* Duct terminations
Testing ..... *see* Inspection and testing
Thermal recovery unit 9.3.1, 9.3.2, 11.1.8
Definition 3.3.47
Trained 10.9.2, A.10.9.2
Definition 3.3.48, A.3.3.48
Transducer 13.3.5, 15.3
Traps ..... 7.1.4, 7.8.2.1(4), 7.8.3(5)
Definition 3.3.49

-U-

Ultraviolet hoods 5.5, 11.5
Upright broilers ..... *see* Broilers, upright

-V-

Ventilation ..... *see also* Air movement; Exhaust systems
Down draft appliance ventilation systems ..... Chap. 15
Natural draft ventilation systems 14.1.1, 14.1.4
For solid fuel cooking equipment 14.1
Ventilated ceiling technology, listed 5.6

-W-

Wall terminations 7.8.3, 14.4.4, A.7.8.2.2
Water supply, fire extinguishing systems ..... 10.2.8.4, 10.2.9, 10.2.10, 14.9.3.7, A.10.2.10(4)
Water valve supervision ..... 10.2.10, A.10.2.10(4)
Water-wash system, duct .... 10.2.8, 10.2.10, 10.7.4, 11.5, A.10.2.10(4)
Weld, continuous ..... *see* Continuous weld

Copyright National Fire Protection Association
Provided by IHS under license with NFPA
No reproduction or networking permitted without license from IHS
Not for Resale

Sequence of Events Leading to Issuance of an NFPA Committee Document

Step 1: Call for Proposals

- Proposed new Document or new edition of an existing Document is entered into one of two yearly revision cycles, and a Call for Proposals is published.

Step 2: Report on Proposals (ROP)

- Committee meets to act on Proposals, to develop its own Proposals, and to prepare its Report.
- Committee votes by written ballot on Proposals. If two-thirds approve, Report goes forward. Lacking two-thirds approval, Report returns to Committee.
- Report on Proposals (ROP) is published for public review and comment.

Step 3: Report on Comments (ROC)

- Committee meets to act on Public Comments to develop its own Comments, and to prepare its report.
- Committee votes by written ballot on Comments. If two-thirds approve, Report goes forward. Lacking two-thirds approval, Report returns to Committee.
- Report on Comments (ROC) is published for public review.

Step 4: Technical Report Session

- "*Notices of intent to make a motion"* are filed, are reviewed, and valid motions are certified for presentation at the Technical Report Session. ("Consent Documents" that have no certified motions bypass the Technical Report Session and proceed to the Standards Council for issuance.)
- NFPA membership meets each June at the Annual Meeting Technical Report Session and acts on Technical Committee Reports (ROP and ROC) for Documents with "certified amending motions."
- Committee(s) vote on any amendments to Report approved at NFPA Annual Membership Meeting.

Step 5: Standards Council Issuance

- Notification of intent to file an appeal to the Standards Council on Association action must be filed within 20 days of the NFPA Annual Membership Meeting.
- Standards Council decides, based on all evidence, whether or not to issue Document or to take other action, including hearing any appeals.

Committee Membership Classifications

The following classifications apply to Technical Committee members and represent their principal interest in the activity of the committee.

M *Manufacturer:* A representative of a maker or marketer of a product, assembly, or system, or portion thereof, that is affected by the standard.

U *User:* A representative of an entity that is subject to the provisions of the standard or that voluntarily uses the standard.

I/M *Installer/Maintainer:* A representative of an entity that is in the business of installing or maintaining a product, assembly, or system affected by the standard.

L *Labor:* A labor representative or employee concerned with safety in the workplace.

R/T *Applied Research/Testing Laboratory:* A representative of an independent testing laboratory or independent applied research organization that promulgates and/or enforces standards.

E *Enforcing Authority:* A representative of an agency or an organization that promulgates and/or enforces standards.

I *Insurance:* A representative of an insurance company, broker, agent, bureau, or inspection agency.

C *Consumer:* A person who is, or represents, the ultimate purchaser of a product, system, or service affected by the standard, but who is not included in the *User* classification.

SE *Special Expert:* A person not representing any of the previous classifications, but who has a special expertise in the scope of the standard or portion thereof.

NOTES;
1. "Standard" connotes code, standard, recommended practice, or guide.
2. A representative includes an employee.
3. While these classifications will be used by the Standards Council to achieve a balance for Technical Committees, the Standards Council may determine that new classifications of members or unique interests need representation in order to foster the best possible committee deliberations on any project. In this connection, the Standards Council may make appointments as it deems appropriate in the public interest, such as the classification of "Utilities" in the National Electrical Code Committee.
4. Representatives of subsidiaries of any group are generally considered to have the same classification as the parent organization.

Copyright National Fire Protection Association
Provided by IHS under license with NFPA
No reproduction or networking permitted without license from IHS
Not for Resale

NFPA Technical Committee Document Proposal Form

NOTE: All Proposals must be received by 5:00 pm EST/EDST on the published Proposal Closing Date.

For further information on the standards-making process, please contact the Codes and Standards Administration at 617-984-7249 or visit www.nfpa.org/codes.

For technical assistance, please call NFPA at 1-888-344-3555.

FOR OFFICE USE ONLY

Log #:

Date Rec'd:

Please indicate in which format you wish to receive your ROP/ROC ☐ **electronic** ☐ **paper** ☒ **download**
(Note: If choosing the download option, you must view the ROP/ROC from our website; no copy will be sent to you.)

Date April 1, 200X **Name** John J. Doe **Tel. No.** 716-555-1234

Company Air Canada Pilot's Association

Street Address 123 Summer Street Lane **City** Lewiston **State** NY **Zip** 14092

Please indicate organization represented (if any)

1. (a) NFPA Document Title National Fuel Gas Code **NFPA No. & Year** 54, 200X Edition

(b) Section/Paragraph 3.3

2. Proposal Recommends (check one): ☐ new text ☒ revised text ☐ deleted text

3. Proposal (include proposed new or revised wording, or identification of wording to be deleted): [Note: Proposed text should be in legislative format; i.e., use underscore to denote wording to be inserted (inserted wording) and strike-through to denote wording to be deleted (~~deleted wording~~).]

Revise definition of effective ground-fault current path to read:

3.3.78 Effective Ground-Fault Current Path. An intentionally constructed, permanent, low impedance electrically conductive path designed and intended to carry ~~underground~~ electric fault current ~~conditions~~ from the point of a ground fault on a wiring system to the electrical supply source.

4. Statement of Problem and Substantiation for Proposal: (Note: State the problem that would be resolved by your recommendation; give the specific reason for your Proposal, including copies of tests, research papers, fire experience, etc. If more than 200 words, it may be abstracted for publication.)

Change uses proper electrical terms.

5. Copyright Assignment

(a) ☐ **I am the author of the text or other material (such as illustrations, graphs) proposed in this Proposal.**

(b) ☒ **Some or all of the text or other material proposed in this Proposal was not authored by me. Its source is as follows** (please identify which material and provide complete information on its source)**:**

ABC Co.

I agree that any material that I author, either individually or with others, in connection with work performed by an NFPA Technical Committee shall be considered to be works made for hire for the NFPA. To the extent that I retain any rights in copyright as to such material, or as to any other material authored by me that I submit for the use of an NFPA Technical Committee in the drafting of an NFPA code, standard, or other NFPA document, I hereby grant and assign all and full rights in copyright to the NFPA. I further agree and acknowledge that I acquire no rights in any publication of the NFPA and that copyright and all rights in materials produced by NFPA Technical Committees are owned by the NFPA and that the NFPA may register copyright in its own name.

Signature (Required)

PLEASE USE SEPARATE FORM FOR EACH PROPOSAL • NFPA Fax: (617) 770-3500

Mail to: Secretary, Standards Council, National Fire Protection Association, 1 Batterymarch Park, Quincy, MA 02169-7471

6/8/2007

SAMPLE

--`,,```,,,,````-`-`,,`,,`,`,,`---

Copyright National Fire Protection Association
Provided by IHS under license with NFPA
No reproduction or networking permitted without license from IHS

Not for Resale

NFPA Technical Committee Document Proposal Form

NOTE: All Proposals must be received by 5:00 pm EST/EDST on the published Proposal Closing Date.

For further information on the standards-making process, please contact the Codes and Standards Administration at 617-984-7249 or visit www.nfpa.org/codes.

For technical assistance, please call NFPA at 1-888-344-3555.

FOR OFFICE USE ONLY

Log #: _____

Date Rec'd: _____

Please indicate in which format you wish to receive your ROP/ROC ☐ electronic ☐ paper ☐ download
(Note: If choosing the download option, you must view the ROP/ROC from our website; no copy will be sent to you.)

Date _____ **Name** _____ **Tel. No.** _____

Company _____

Street Address _____ **City** _____ **State** _____ **Zip** _____

Please indicate organization represented (if any) _____

1. (a) NFPA Document Title _____ **NFPA No. & Year** _____

(b) Section/Paragraph _____

2. Proposal Recommends (check one): ☐ new text ☐ revised text ☐ deleted text

3. Proposal (include proposed new or revised wording, or identification of wording to be deleted): [Note: Proposed text should be in legislative format; i.e., use underscore to denote wording to be inserted (inserted wording) and strike-through to denote wording to be deleted (~~deleted wording~~).]

4. Statement of Problem and Substantiation for Proposal: (Note: State the problem that would be resolved by your recommendation; give the specific reason for your Proposal, including copies of tests, research papers, fire experience, etc. If more than 200 words, it may be abstracted for publication.)

5. Copyright Assignment

(a) ☐ I am the author of the text or other material (such as illustrations, graphs) proposed in this Proposal.

(b) ☐ Some or all of the text or other material proposed in this Proposal was not authored by me. Its source is as follows (please identify which material and provide complete information on its source)**:**

_____

I agree that any material that I author, either individually or with others, in connection with work performed by an NFPA Technical Committee shall be considered to be works made for hire for the NFPA. To the extent that I retain any rights in copyright as to such material, or as to any other material authored by me that I submit for the use of an NFPA Technical Committee in the drafting of an NFPA code, standard, or other NFPA document, I hereby grant and assign all and full rights in copyright to the NFPA. I further agree and acknowledge that I acquire no rights in any publication of the NFPA and that copyright and all rights in materials produced by NFPA Technical Committees are owned by the NFPA and that the NFPA may register copyright in its own name.

Signature (Required) _____

PLEASE USE SEPARATE FORM FOR EACH PROPOSAL • NFPA Fax: (617) 770-3500

Mail to: Secretary, Standards Council, National Fire Protection Association, 1 Batterymarch Park, Quincy, MA 02169-7471

6/8/2007

Copyright National Fire Protection Association
Provided by IHS under license with NFPA
No reproduction or networking permitted without license from IHS
Not for Resale