NFPA 92B

Standard for Smoke Management Systems in Malls, Atria, and Large Spaces

2005 Edition

NFPA, 1 Batterymarch Park, Quincy, MA 02169-7471
An International Codes and Standards Organization

Copyright National Fire Protection Association
Provided by IHS under license with NFPA
No reproduction or networking permitted without license from IHS

Not for Resale

IMPORTANT NOTICES AND DISCLAIMERS CONCERNING NFPA DOCUMENTS

NOTICE AND DISCLAIMER OF LIABILITY CONCERNING THE USE OF NFPA DOCUMENTS

NFPA codes, standards, recommended practices, and guides, of which the document contained herein is one, are developed through a consensus standards development process approved by the American National Standards Institute. This process brings together volunteers representing varied viewpoints and interests to achieve consensus on fire and other safety issues. While the NFPA administers the process and establishes rules to promote fairness in the development of consensus, it does not independently test, evaluate, or verify the accuracy of any information or the soundness of any judgments contained in its codes and standards.

The NFPA disclaims liability for any personal injury, property or other damages of any nature whatsoever, whether special, indirect, consequential or compensatory, directly or indirectly resulting from the publication, use of, or reliance on this document. The NFPA also makes no guaranty or warranty as to the accuracy or completeness of any information published herein.

In issuing and making this document available, the NFPA is not undertaking to render professional or other services for or on behalf of any person or entity. Nor is the NFPA undertaking to perform any duty owed by any person or entity to someone else. Anyone using this document should rely on his or her own independent judgment or, as appropriate, seek the advice of a competent professional in determining the exercise of reasonable care in any given circumstances.

The NFPA has no power, nor does it undertake, to police or enforce compliance with the contents of this document. Nor does the NFPA list, certify, test or inspect products, designs, or installations for compliance with this document. Any certification or other statement of compliance with the requirements of this document shall not be attributable to the NFPA and is solely the responsibility of the certifier or maker of the statement.

Copyright National Fire Protection Association
Provided by IHS under license with NFPA
No reproduction or networking permitted without license from IHS
Not for Resale

ADDITIONAL NOTICES AND DISCLAIMERS

Updating of NFPA Documents

Users of NFPA codes, standards, recommended practices, and guides should be aware that these documents may be superseded at any time by the issuance of new editions or may be amended from time to time through the issuance of Tentative Interim Amendments. An official NFPA document at any point in time consists of the current edition of the document together with any Tentative Interim Amendments and any Errata then in effect. In order to determine whether a given document is the current edition and whether it has been amended through the issuance of Tentative Interim Amendments or corrected through the issuance of Errata, consult appropriate NFPA publications such as the National Fire Codes® Subscription Service, visit the NFPA website at www.nfpa.org, or contact the NFPA at the address listed below.

Interpretations of NFPA Documents

A statement, written or oral, that is not processed in accordance with Section 6 of the Regulations Governing Committee Projects shall not be considered the official position of NFPA or any of its Committees and shall not be considered to be, nor be relied upon as, a Formal Interpretation.

Patents

The NFPA does not take any position with respect to the validity of any patent rights asserted in connection with any items which are mentioned in or are the subject of NFPA codes, standards, recommended practices, and guides, and the NFPA disclaims liability for the infringement of any patent resulting from the use of or reliance on these documents. Users of these documents are expressly advised that determination of the validity of any such patent rights, and the risk of infringement of such rights, is entirely their own responsibility.

NFPA adheres to applicable policies of the American National Standards Institute with respect to patents. For further information contact the NFPA at the address listed below.

Law and Regulations

Users of these documents should consult applicable federal, state, and local laws and regulations. NFPA does not, by the publication of its codes, standards, recommended practices, and guides, intend to urge action that is not in compliance with applicable laws, and these documents may not be construed as doing so.

Copyrights

This document is copyrighted by the NFPA. It is made available for a wide variety of both public and private uses. These include both use, by reference, in laws and regulations, and use in private self-regulation, standardization, and the promotion of safe practices and methods. By making this document available for use and adoption by public authorities and private users, the NFPA does not waive any rights in copyright to this document.

Use of NFPA documents for regulatory purposes should be accomplished through adoption by reference. The term "adoption by reference" means the citing of title, edition, and publishing information only. Any deletions, additions, and changes desired by the adopting authority should be noted separately in the adopting instrument. In order to assist NFPA in following the uses made of its documents, adopting authorities are requested to notify the NFPA (Attention: Secretary, Standards Council) in writing of such use. For technical assistance and questions concerning adoption of NFPA documents, contact NFPA at the address below.

For Further Information

All questions or other communications relating to NFPA codes, standards, recommended practices, and guides and all requests for information on NFPA procedures governing its codes and standards development process, including information on the procedures for requesting Formal Interpretations, for proposing Tentative Interim Amendments, and for proposing revisions to NFPA documents during regular revision cycles, should be sent to NFPA headquarters, addressed to the attention of the Secretary, Standards Council, NFPA, 1 Batterymarch Park, P.O. Box 9101, Quincy, MA 02269-9101.

For more information about NFPA, visit the NFPA website at www.nfpa.org.

Copyright National Fire Protection Association
Provided by IHS under license with NFPA
No reproduction or networking permitted without license from IHS
Not for Resale

Copyright © 2005, National Fire Protection Association, All Rights Reserved

NFPA 92B

Standard for

Smoke Management Systems in Malls, Atria, and Large Spaces

2005 Edition

This edition of NFPA 92B, *Standard for Smoke Management Systems in Malls, Atria, and Large Spaces*, was prepared by the Technical Committee on Smoke Management Systems and acted on by NFPA at its November Association Technical Meeting held November 13–17, 2004, in Miami Beach, FL. It was issued by the Standards Council on January 14, 2005, with an effective date of February 7, 2005, and supersedes all previous editions.

This edition of NFPA 92B was approved as an American National Standard on February 7, 2005.

Origin and Development of NFPA 92B

The NFPA Standards Council established the Technical Committee on Smoke Management Systems in 1985 and charged it with addressing the need for guidelines and materials on building fire smoke management. The Committee's first document, NFPA 92A, *Recommended Practice for Smoke-Control Systems*, was published in 1988 and addressed smoke control utilizing barriers, airflows, and pressure differentials so as to confine the smoke of a fire to the zone of fire origin to maintain a tenable environment in other zones. The complex problem of maintaining tenable conditions within large zones of fire origin, such as atria and shopping malls, represented a more difficult issue in terms of the physics involved and thus was reserved for the document, NFPA 92B, *Guide for Smoke Management Systems in Malls, Atria, and Large Areas.* The first edition was published in 1991; the second edition was published in 1995.

The 2000 edition was a substantial rewrite of the document to reflect the best current information on smoke management in malls, atria, and other large spaces. Major changes included new and updated definitions, additional data on the impact of sprinklers on smoke management, extensive discussion on basic principles and limitations, additional information on estimating heat release rates of fires, and new criteria for system verification.

The 2005 edition is a major revision from the previous edition. The document was rewritten as a standard with mandatory provisions regarding the design, installation, and testing of smoke management systems provided. In addition, the document was reorganized to comply with the *Manual of Style for NFPA Technical Committee Documents*. Some technical changes include the revision of some equations used to determine the minimum number of exhaust inlets and the introduction of advisory information on how to calculate smoke temperature when plugholing is being considered. Text was also revised to clarify the application of certain equations and to provide guidance on determining the effective smoke layer interface and the application of virtual origin concept. Example problems were revised to reflect changes made in the standard.

Copyright National Fire Protection Association
Provided by IHS under license with NFPA
No reproduction or networking permitted without license from IHS
Not for Resale

Technical Committee on Smoke Management Systems

James A. Milke, *Chair*
University of Maryland, MD [SE]

Elyahu (Elie) Avidor, Charlottesville, VA [RT]
Rep. Standards Institution of Israel
Joseph A. Brooks, Air Movement & Control Association International, Inc. IL [M]
Rep. Air Movement & Control Assn./HVI Division
Jack B. Buckley, Houston, TX [SE]
Lydia A. Butterworth, Smithsonian Institution, DC [U]
Christopher S. Cahill, St. Paul Department of Fire & Safety Services, MN [E]
Rep. International Fire Marshals Association
Paul David Compton, Colt International, Ltd., England [M]
Michael Earl Dillon, Dillon Consulting Engineers, Inc., CA [SE]
Robert G. Dittrich, Honeywell, International, IL [M]
Rep. National Electrical Manufacturers Association
Douglas H. Evans, Clark County Building Department, NV [E]
Michael J. Ferreira, Hughes Associates, Inc., MD [SE]
Gunnar Heskestad, FM Global, MA [I]
Rep. FM Global/FM Engineering & Research
Winfield T. Irwin, Irwin Services, PA [M]
Rep. North American Insulation Manufacturers Association
John E. Kampmeyer, Triad Fire Protection Engineering Corporation, PA [SE]
Rep. National Society of Professional Engineers
John H. Klote, Fire and Smoke Consulting, VA [SE]
William E. Koffel, Koffel Associates, Inc., MD [M]
Rep. AAMA Smoke Vent Task Group
Gary D. Lougheed, National Research Council of Canada, Canada [RT]
Fran McCabe, Prefco Products, PA [M]
Lawrence J. Shudak, Underwriters Laboratories Inc., IL [RT]
Paul Simony, Acralight International, CA [M]
Randolph W. Tucker, The RJA Group, Inc., TX [SE]
Paul G. Turnbull, Siemens Building Technology, Inc., IL [M]
Robert Van Becelaere, Ruskin Manufacturing, MO [M]
Rep. American Society of Mechanical Engineers
Stacy N. Welch, Marriott International, Inc., DC [U]
Peter J. Willse, GE Global Asset Protection Services, CT [I]
Rep. GE Global Asset Protection Services
Steven D. Wolin, Code Consultants, Inc., MO [SE]

Alternates

Sanjay Aggarwal, The RJA Group, Inc., CA [SE]
(Alt. to R. W. Tucker)
Robert M. Berhinig, Underwriters Laboratories Inc., IL [RT]
(Alt. to L. J. Shudak)
Craig L. Beyler, Hughes Associates, Inc., MD [SE]
(Alt. to M. J. Ferreira)
Richard J. Davis, FM Global, MA [I]
(Alt. to G. Heskestad)
Gregory R. Miller, Code Consultants, Inc., MO [SE]
(Alt. to S. D. Wolin)
Ronald A. Schulz, GE Global Asset Protection Services, MI [I]
(Alt. to P. J. Willse)
Rick Thornberry, The Code Consortium, Inc., CA [M]
(Alt. to W. E. Koffel)

Nonvoting

Bent A. Borresen, Techno Consultant, Norway
E. G. Butcher, Fire Check Consultants, United Kingdom
(Member Emeritus)
Christian Norgaard Madsen, Techno Consultant, Norway
Harold E. Nelson, Hughes Associates, Inc., VA [SE]
Alan Charles Parnell, Fire Check Consultants, England
(Alt. to NV Principal)

Milosh T. Puchovsky, NFPA Staff Liaison

This list represents the membership at the time the Committee was balloted on the final text of this edition. Since that time, changes in the membership may have occurred. A key to classifications is found at the back of the document.

NOTE: Membership on a committee shall not in and of itself constitute an endorsement of the Association or any document developed by the committee on which the member serves.

Committee Scope: This Committee shall have primary responsibility for documents on the design, installation, testing, operation, and maintenance of systems for the control, removal, or venting of heat or smoke from fires in buildings.

Copyright National Fire Protection Association
Provided by IHS under license with NFPA
No reproduction or networking permitted without license from IHS
Not for Resale

Contents

Chapter 1 Administration **92B–** 4
1.1 Scope **92B–** 4
1.2 Purpose **92B–** 4
1.3 Retroactivity **92B–** 4
1.4 Equivalency **92B–** 4

Chapter 2 Referenced Publications **92B–** 4
2.1 General **92B–** 4
2.2 NFPA Publications **92B–** 4
2.3 Other Publications **92B–** 4

Chapter 3 Definitions **92B–** 5
3.1 General **92B–** 5
3.2 NFPA Official Definitions **92B–** 5
3.3 General Definitions **92B–** 5

Chapter 4 Design Fundamentals **92B–** 6
4.1 Design Objectives **92B–** 6
4.2 Design Basis **92B–** 6
4.3 Design Approaches **92B–** 6
4.4 Design Considerations **92B–** 6
4.5 Smoke Management System Operation **92B–** 7
4.6 Makeup Air **92B–** 7
4.7 Operating Conditions **92B–** 7
4.8 Weather Data **92B–** 7
4.9 Stratification of Smoke **92B–** 7

Chapter 5 Calculation Procedures **92B–** 7
5.1 Introduction **92B–** 7
5.2 Design Fire **92B–** 7
5.3 Mass Consumption **92B–** 9
5.4 Varying Cross-Sectional Geometries and Complex Geometries **92B–** 9
5.5 Opposed Airflow **92B–** 9
5.6 Scaling Laws **92B–**11

Chapter 6 Algebraic Equations **92B–**11
6.1 Smoke Layer Calculations **92B–**11
6.2 Rate of Smoke Mass Production **92B–**12
6.3 Number of Exhaust Inlets **92B–**13
6.4 Volumetric Flow Rate **92B–**14

Chapter 7 Equipment and Controls **92B–**14
7.1 Smoke Dampers **92B–**14
7.2 Makeup Air System **92B–**14
7.3 Control Systems **92B–**14
7.4 Electrical Services **92B–**14
7.5 Materials **92B–**14

Chapter 8 Testing **92B–**14
8.1 General **92B–**14
8.2 Component System Testing **92B–**14
8.3 Acceptance Testing **92B–**15
8.4 Periodic Testing **92B–**15

Chapter 9 Design Documentation **92B–**15
9.1 Documentation Required **92B–**15
9.2 Detailed Design Report **92B–**16
9.3 Operations and Maintenance Manual **92B–**16

Annex A Explanatory Material **92B–**16

Annex B Predicting the Rate of Heat Release of Fires **92B–**28

Annex C *t*-squared Fires **92B–**36

Annex D Example Problems Illustrating the Use of the Equations in NFPA 92B **92B–**38

Annex E Zone Fire Models **92B–**40

Annex F Computational Fluid Dynamic (CFD) Models **92B–**44

Annex G Additional Design Objectives **92B–**45

Annex H Stratification of Smoke **92B–**47

Annex I Comparison of Equations **92B–**48

Annex J Informational References **92B–**51

Index **92B–**55

Copyright National Fire Protection Association
Provided by IHS under license with NFPA
No reproduction or networking permitted without license from IHS
Not for Resale

NFPA 92B

Standard for

Smoke Management Systems in Malls, Atria, and Large Spaces

2005 Edition

IMPORTANT NOTE: This NFPA document is made available for use subject to important notices and legal disclaimers. These notices and disclaimers appear in all publications containing this document and may be found under the heading "Important Notices and Disclaimers Concerning NFPA Documents." They can also be obtained on request from NFPA or viewed at www.nfpa.org/disclaimers.

NOTICE: An asterisk (*) following the number or letter designating a paragraph indicates that explanatory material on the paragraph can be found in Annex A.

A reference in brackets [ ] following a section or paragraph indicates material that has been extracted from another NFPA document. As an aid to the user, the complete title and edition of the source documents for mandatory extracts are given in Chapter 2 and those for nonmandatory extracts are given in Annex J. Editorial changes to extracted material consist of revising references to an appropriate division in this document or the inclusion of the document number with the division number when the reference is to the original document. Requests for interpretations or revisions of extracted text shall be sent to the technical committee responsible for the source document.

Information on referenced publications can be found in Chapter 2 and Annex J.

Chapter 1 Administration

1.1* Scope.

1.1.1 This standard provides methodologies for estimating the location of smoke within a large-volume space due to a fire either in the large-volume space or in an adjacent space.

1.1.1.1 These methodologies comprise the technical basis for assisting in the design, installation, testing, operation, and maintenance of new and retrofitted smoke management systems for the management of smoke within the space where the fire exists or between spaces not separated by smoke barriers.

1.1.1.2 Buildings within the scope of this standard include those with atria, covered malls, and similar large-volume spaces.

1.1.1.3 This standard is not intended to apply to warehouses, manufacturing facilities, or other similar spaces.

1.1.1.4 This standard does not provide methodologies to assess the effects of smoke exposure on people, property, or mission continuity.

1.1.2 The algebraic approaches to smoke management contained in this standard assume either that the smoke removal will be by mechanical means or that the smoke will fill the large space.

1.2 Purpose.

1.2.1* The purpose of this standard is to provide requirements for implementing smoke management systems to accomplish one or both of the following:

(1) Maintain a tenable environment in the means of egress from large-volume building spaces during the time required for evacuation
(2) Control and reduce the migration of smoke between the fire area and adjacent spaces

1.2.2 Specific design objectives are established in other codes and standards.

1.3 Retroactivity.

1.3.1 Unless otherwise noted, the provisions of this standard are not intended to be applied to facilities, equipment, structures, or installations that were existing or approved for construction or installation prior to the effective date of this standard.

1.3.2 In those cases where the authority having jurisdiction determines that the existing situation involves a distinct hazard to life or property, retroactive application of the provisions of this standard shall be permitted.

1.3.3 Where a smoke management system is being altered, extended, or renovated, the requirements of this standard shall apply only to the work being undertaken.

1.3.4 Verification is required to assure that new or modified systems do not adversely affect the performance of existing smoke management systems.

1.4 Equivalency.

1.4.1 Nothing in this standard is intended to prevent the use of systems, methods, or devices of equivalent or superior quality, strength, fire resistance, effectiveness, durability, and safety over those prescribed by this standard.

1.4.2 Technical documentation shall be submitted to the authority having jurisdiction to demonstrate equivalency.

1.4.3 The system, method, or device shall be approved for the intended purpose by the authority having jurisdiction.

Chapter 2 Referenced Publications

2.1 General. The documents or portions thereof listed in this chapter are referenced within this standard and shall be considered part of the requirements of this document.

2.2 NFPA Publications. National Fire Protection Association, 1 Batterymarch Park, Quincy, MA 02169-7471.

NFPA 70, *National Electrical Code®,* 2005 edition.

NFPA 90A, *Standard for the Installation of Air-Conditioning and Ventilating Systems,* 2002 edition.

2.3 Other Publications.

2.3.1 UL Publications. Underwriters Laboratories Inc., 333 Pfingsten Road, Northbrook, IL 60062-2096.

UL 555, *Standard for Fire Dampers,* 1999.

UL 555S, *Standard for Smoke Dampers,* 1999.

UL 864, *Standard for Control Units and Accessories for Fire Alarm Systems,* 2003.

Copyright National Fire Protection Association
Provided by IHS under license with NFPA
No reproduction or networking permitted without license from IHS
Not for Resale

Chapter 3 Definitions

3.1 General. The definitions contained in this chapter shall apply to the terms used in this standard. Where terms are not defined in this chapter or within another chapter, they shall be defined using their ordinarily accepted meanings within the context in which they are used. *Merriam-Webster's Collegiate Dictionary,* 11th edition, shall be the source for the ordinarily accepted meaning.

3.2 NFPA Official Definitions.

3.2.1* Approved. Acceptable to the authority having jurisdiction.

3.2.2* Authority Having Jurisdiction (AHJ). An organization, office, or individual responsible for enforcing the requirements of a code or standard, or for approving equipment, materials, an installation, or a procedure.

3.2.3 Labeled. Equipment or materials to which has been attached a label, symbol, or other identifying mark of an organization that is acceptable to the authority having jurisdiction and concerned with product evaluation, that maintains periodic inspection of production of labeled equipment or materials, and by whose labeling the manufacturer indicates compliance with appropriate standards or performance in a specified manner.

3.2.4* Listed. Equipment, materials, or services included in a list published by an organization that is acceptable to the authority having jurisdiction and concerned with evaluation of products or services, that maintains periodic inspection of production of listed equipment or materials or periodic evaluation of services, and whose listing states that either the equipment, material, or service meets appropriate designated standards or has been tested and found suitable for a specified purpose.

3.2.5 Shall. Indicates a mandatory requirement.

3.2.6 Should. Indicates a recommendation or that which is advised but not required.

3.2.7 Standard. A document, the main text of which contains only mandatory provisions using the word "shall" to indicate requirements and which is in a form generally suitable for mandatory reference by another standard or code or for adoption into law. Nonmandatory provisions shall be located in an appendix or annex, footnote, or fine-print note and are not to be considered a part of the requirements of a standard.

3.3 General Definitions.

3.3.1 Atrium. A large-volume space created by a floor opening or series of floor openings connecting two or more stories that is covered at the top of the series of openings and is used for purposes other than an enclosed stairway; an elevator hoistway; an escalator opening; or as a utility shaft used for plumbing, electrical, air-conditioning, or communications facilities. [***101***, 2003]

3.3.2* Ceiling Jet. A flow of smoke under the ceiling, extending radially from the point of fire plume impingement on the ceiling.

3.3.3* Communicating Space. A space within a building that has an open pathway to a large-volume space such that smoke from a fire either in the communicating space or in a large-volume space can move from one to another without restriction.

3.3.4 Covered Mall. A single building enclosing a number of tenants and occupancies wherein two or more tenants have a main entrance into one or more malls.

3.3.5 Draft Curtain. A solid material, beam, girder, or similar material or construction used to channel or contain smoke that is attached to the underside of the ceiling and protrudes a limited distance downward.

3.3.6 End-to-End Verification. A self-testing method that provides positive confirmation that the desired result (i.e., airflow or damper position) has been achieved when a controlled device has been activated, such as during smoke control, testing, or manual override operations.

3.3.7 Fire.

3.3.7.1 ***Fuel Limited Fire.*** A fire that has a heat release rate that is controlled by the material burning.

3.3.7.2 ***Sprinkler Controlled Fire.*** A fire that has a constant or decaying heat release rate due to the action of sprinkler spray.

3.3.7.3 ***Steady Fire.*** A fire that has a constant heat release rate.

3.3.7.4 ***t-squared (t^2) Fire.*** A fire that has a heat release rate that grows proportionally to the square of time from ignition. *[See Annex C for further information on t-squared (t^2) profile fires.]*

3.3.7.5 ***Unsteady Fire.*** A fire that has a heat release rate that varies with respect to time.

3.3.7.6 ***Ventilation Limited Fire.*** A fire where every object in the fire compartment is fully involved in fire and the heat release rate depends on the airflow through the openings to the fire compartment.

3.3.8* First Indication of Smoke. The boundary between the transition zone and the smokefree air.

3.3.9 Growth Time (t_g). The time interval from the time of effective ignition until the heat release rate of the fire is 1000 Btu/sec (1055 kW).

3.3.10 Large-Volume Space. An uncompartmented space, generally two or more stories in height, within which smoke from a fire either in the space or in a communicating space can move and accumulate without restriction.

3.3.11 Plugholing. The condition where air from below the smoke layer is pulled through the smoke layer into the smoke exhaust due to a high exhaust rate.

3.3.12* Plume. A column of smoke that rises above a fire.

3.3.12.1* ***Axisymmetric Plume.*** A plume that rises above a fire, does not come into contact with wall or other obstacles, and is not disrupted or deflected by airflow.

3.3.12.2* ***Balcony Spill Plume.*** A smoke plume that originates from a compartment fire, flows out the doorway, flows under a balcony, and flows upward after passing the balcony edge.

3.3.12.3* ***Window Plume.*** A plume that flows out of an opening to a room or other compartment that is involved in a ventilation limited fire.

3.3.13 Separated Spaces. Spaces within a building that are isolated from large-volume spaces by smoke barriers.

--`,,```-`-`,,`,,`,`,,`---

Copyright National Fire Protection Association
Provided by IHS under license with NFPA
No reproduction or networking permitted without license from IHS
Not for Resale

3.3.14 Smoke. The airborne solid and liquid particulates and gases evolved when a material undergoes pyrolysis or combustion, together with the quantity of air that is entrained or otherwise mixed into the mass. [**318,** 2002]

3.3.15* Smoke Barrier. For the purposes of this standard, a continuous membrane, either vertical or horizontal, such as a wall, floor, or ceiling assembly, that is designed and constructed to restrict the movement of smoke in conjunction with a smoke control or management system.

3.3.16 Smoke Damper. A device within the air distribution system to control the movement of smoke.

3.3.17* Smoke Layer. The accumulated thickness of smoke below a physical or thermal barrier.

3.3.18* Smoke Layer Interface. The theoretical boundary between a smoke layer and the smokefree air.

3.3.19 Smoke Management System. An engineered system that includes all methods that can be used singly or in combination to modify smoke movement.

3.3.20 Stack Effect. The vertical airflow within buildings caused by the temperature-created density differences between the building interior and exterior or between two interior spaces.

3.3.21 Tenable Environment. An environment in which smoke and heat are limited or otherwise restricted to maintain the impact on occupants to a level that is not life threatening.

3.3.22* Transition Zone. The layer between the smoke layer interface and the first indication of smoke in which the smoke layer temperature decreases to ambient.

Chapter 4 Design Fundamentals

4.1 Design Objectives.

4.1.1 The design objectives shall include management of smoke within the large-volume space and any unseparated spaces that communicate with the large-volume space.

4.1.2* The design objectives to be achieved over the design interval time by a smoke management system shall include one or both of the following:

(1) Maintaining a tenable environment within all exit access and area of refuge access paths for the time necessary to allow occupants to reach an exit or area of refuge
(2) Maintaining the smoke layer interface to a predetermined elevation

4.2 Design Basis.

4.2.1 The design basis for a given large-volume building shall include the determination of the following parameters:

(1) The design basis fires used to calculate smoke production (type, location, and quantity of fuel for each design basis fire, extent of coverage and reliability of automatic suppression, extent and type of ventilation)
(2) Height, cross-sectional area, and plan area of the large volume to be protected
(3) Height, cross-sectional area, and plan area of each unseparated space that communicates with the large-volume area
(4) Type and location of occupancies within and communicating with the large-volume space
(5) Barriers, if any, that separate the communicating space from the large-volume space
(6) Egress routes from the large-volume space and any communicating space
(7) Areas of refuge, if any

4.2.2 The source of the smoke from the design basis fires shall consider fire locations within the large-volume space and within unseparated communicating spaces.

4.3 Design Approaches.

4.3.1* The design approach for smoke management in large-volume spaces shall be one or a combination of the following:

(1) Natural smoke filling of an unoccupied volume or smoke reservoir and modeling smoke layer descent to determine whether the smoke layer interface will reach a height at which occupants will be exposed to smoke prior to their ability to egress from the space
(2)*Mechanical smoke exhaust capacity to remove smoke from a space to maintain the smoke layer interface at a predefined height in the space for an indefinite period of time
(3) Mechanical smoke exhaust capacity to remove smoke from a space to slow the rate of smoke layer descent for a period that allows occupants to safely egress from the space
(4) Gravity smoke venting to maintain the smoke layer interface at a predefined height in the space for an indefinite period of time
(5) Gravity smoke venting to slow the rate of smoke layer descent for a period that allows occupants to egress from the space

4.3.2 The smoke development analysis in each of the design approaches listed in 4.3.1 shall be justified using algebraic calculations, computational fluid dynamics (CFD) models, compartment fire models, scale modeling, or zone models *(see Chapter 5).*

4.4 Design Considerations.

4.4.1 Design Limitations.

4.4.1.1* Minimum Design Smoke Layer Depth. The minimum design depth of the smoke layer shall be either of the following:

(1) Twenty percent of the floor-to-ceiling height
(2) Based on an engineering analysis

4.4.1.2 Special Considerations Related to Natural Venting. Designs that use a mix of natural and mechanical ventilation shall have supporting engineering analysis or physical (scale) modeling to verify the design functions as intended.

4.4.2 Communicating Spaces.

4.4.2.1 Managing Smoke Spread to Communicating Spaces. Managing smoke spread to communicating spaces shall be accomplished by one of the following methods:

(1) Maintaining the smoke layer interface at a level higher than that of the highest opening to the communicating space
(2)*Providing a smoke barrier to limit smoke spread into the communicating space
(3) Providing an opposed airflow through the opening to prohibit smoke spread into the communicating space

4.4.2.1.1 When smoke barriers are used to limit smoke spread into the communicating space, engineering calculations shall be provided to verify whether a pressure difference applied across the smoke barrier will be needed to prevent smoke migration.

Copyright National Fire Protection Association
Provided by IHS under license with NFPA
No reproduction or networking permitted without license from IHS
Not for Resale

4.4.2.1.2 When the airflow method is used to prevent smoke movement from the large-volume space into communicating spaces for large openings, the flow shall be nearly perpendicular to the plane of the opening.

4.4.2.2* Managing Smoke from Communicating Spaces.

4.4.2.2.1 When communicating spaces are designed to allow the smoke to spill into the large-volume space, the smoke spilling into the large-volume space shall be handled by the smoke management system to maintain the design smoke layer interface height.

4.4.2.2.2 When the smoke control systems are designed to use air flow to prevent the movement of smoke into the large-volume space, sufficient exhaust from the communicating space shall be provided to establish a minimum flow between it and the large-volume space. *(See 5.5.1.)*

4.5 Smoke Management System Operation.

4.5.1 Activation.

4.5.1.1 Activation of smoke management systems shall be accomplished by an approved automatic means.

4.5.1.2 For large spaces where smoke stratification can occur, one of the following detection means shall be used:

(1) Beam-type smoke detector(s) aimed at an upward angle to intersect the smoke layer regardless of the level of stratification
(2) Horizontally mounted beam-type smoke detector(s) located at the ceiling with additional beam-type smoke detector(s) located at other levels in the volume to cover any identified unconditioned (dead air) spaces
(3) Horizontally mounted beam-type smoke detector(s) located below the lowest expected level of stratification

4.5.2 System Startup.

4.5.2.1 The smoke management system shall achieve full operation prior to conditions in the space reaching the design smoke conditions.

4.5.2.2 The determination of the time it takes for the system to become operational shall consider the following events (as appropriate to the specific design objectives):

(1) Time for detection of the fire incident
(2) HVAC system activation time including shut-down and start-up of air handling equipment, opening and closing of dampers, and opening and closing of natural ventilation devices

4.5.3 Duration.

4.5.3.1 When the design of the smoke management system is based on occupants exiting a space before being exposed to smoke or before tenability thresholds are reached, the system shall remain operational for the duration required.

4.5.3.2 Smoke management systems designed to maintain tenable conditions shall not be required to prevent the descent of a smoke layer in spaces where tenable conditions are demonstrated.

4.5.3.3 When the design of the smoke management system is based on occupants' exiting a space before being exposed to smoke or before tenability thresholds are reached, a timed egress analysis shall be conducted.

4.5.4 Manual Override.

4.5.4.1 A means of manually starting and stopping the smoke management system shall be provided at an approved location accessible to the fire department.

4.5.4.2 Manual controls shall be able to override automatic system operation.

4.6* Makeup Air. Makeup air shall be provided by fans or by openings to the outside.

4.6.1 The supply points for the makeup air shall be located beneath the smoke layer interface.

4.6.2 Mechanical makeup air shall be less than the mass flow rate of the mechanical smoke exhaust.

4.6.3 The makeup air shall not cause door-opening force to exceed allowable limits.

4.6.4* The makeup air velocity shall not exceed 200 ft/min (1.02 m/sec) where the makeup air could come into contact with the plume unless a higher makeup air velocity is supported by engineering analysis.

4.7 Operating Conditions. The smoke management system components shall be capable of continuous use at the maximum temperatures expected over the design interval time.

4.8* Weather Data. Designs shall incorporate the effect of outdoor temperature and wind on the performance of the smoke management system.

4.9* Stratification of Smoke. For large spaces where smoke stratification can occur, one of the following detection schemes shall be used:

(1)*An upward beam to detect the smoke layer
(2)*Detection of the smoke layer at various levels
(3)*Horizontal beams to detect the smoke plume

Chapter 5 Calculation Procedures

5.1* Introduction. The smoke management system design approach shall be one or more of the approaches given in 5.1.1 through 5.1.3.

5.1.1* Scale Modeling.

5.1.1.1 In a scale model, the model shall be proportional in all dimensions to the actual building.

5.1.1.2 The size of the fire and the interpretation of the results shall be governed by the scaling laws, as given in Section 5.6.

5.1.2* Algebraic Equations. The algebraic equations of Chapter 6 shall be permitted to be used to provide a means of calculating individual factors that collectively can be used to establish the design requirements of a smoke management system.

5.1.3* Compartment Fire Models. Compartment fire models shall be zone fire models or CFD models. *(For information about zone fire models, see Annex E. For information about CFD models, see Annex F.)*

5.2 Design Fire.

5.2.1* General. This section presents the equations that shall be used to calculate the heat release rates for design fires. *(For information about the heat release rates of fires, see Annex B.)*

Copyright National Fire Protection Association
Provided by IHS under license with NFPA
No reproduction or networking permitted without license from IHS
Not for Resale

5.2.2 Design Fire Types. Design fires shall be one of the following:

(1) Steady fire with a constant heat release rate
(2) Unsteady fire with a heat release rate that varies with time

5.2.3 Steady Design Fires.

5.2.3.1 The heat release rate of steady design fires shall be based on available or developed test data.

5.2.3.2 Where the available fuel mass is used to limit the duration of a steady design fire, the duration of the fire shall be calculated using Equation 5.2.3.2 or 5.2.3.2a as follows:

$$\Delta t = \frac{mH_c}{Q} \qquad \textbf{(5.2.3.2)}$$

where:
Δt = duration of fire (sec)
m = total fuel mass consumed (lb)
H_c = heat of combustion of fuel (Btu/lb)
Q = heat release rate (Btu/sec)

$$\Delta t = \frac{mH_c}{Q} \qquad \textbf{(5.2.3.2a)}$$

where:
Δt = duration of fire (sec)
m = total fuel mass consumed (kg)
H_c = heat of combustion of fuel (kJ/kg)
Q = heat release rate (kW)

5.2.4 Unsteady Design Fires. Unsteady design fires shall include a growth phase and shall include a steady phase or a decay phase, as depicted in Figure 5.2.4(a) and Figure 5.2.4(b), where steady or decay phases are justified based on test data, fuel configuration, or proposed protection systems.

5.2.4.1 Growth Phase. The growth phase of the fire shall be described using one of the following:

(1) Fire test data
(2) *t*-squared fire growth model
(3) Other fire growth models acceptable to the authority having jurisdiction

5.2.4.2 *t*-squared Fire Growth Model.

5.2.4.2.1 Where used, the heat release rate of a *t*-squared design fire shall be calculated according to Equation 5.2.4.2.1 or 5.2.4.2.1a as follows:

$$Q = 1000\left(\frac{t}{t_g}\right)^2 \qquad \textbf{(5.2.4.2.1)}$$

where:
Q = heat release rate of design fire (Btu/sec)
t = time after effective ignition (sec)
t_g = growth time (sec)

$$Q = 1055\left(\frac{t}{t_g}\right)^2 \qquad \textbf{(5.2.4.2.1a)}$$

where:
Q = heat release rate of design fire (kW)
t = time after effective ignition (sec)
t_g = growth time (sec)

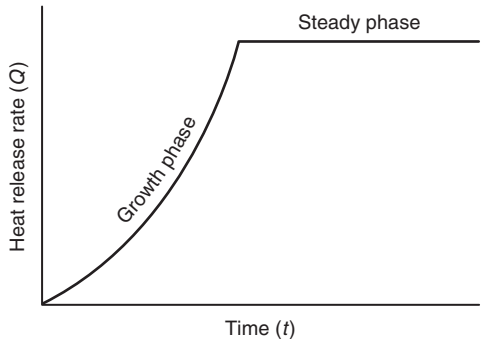

FIGURE 5.2.4(a) Unsteady Design Fire with Steady Phase.

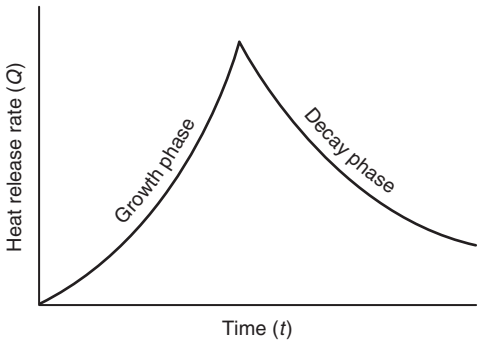

FIGURE 5.2.4(b) Unsteady Design Fire with Decay Phase.

5.2.4.2.2 Where the available fuel mass is used to limit the duration of a *t*-squared fire, the duration of the fire shall be calculated using Equation 5.2.4.2.2 or 5.2.4.2.2a as follows:

$$\Delta t = \left(\frac{mH_c t_g^2}{333}\right)^{1/3} \qquad \textbf{(5.2.4.2.2)}$$

where:
Δt = duration of fire (sec)
m = total fuel mass consumed (lb)
H_c = heat of combustion of fuel (Btu/lb)
t_g = growth time (sec)

$$\Delta t = \left(\frac{mH_c t_g^2}{333}\right)^{1/3} \qquad \textbf{(5.2.4.2.2a)}$$

where:
Δt = duration of fire (sec)
m = total fuel mass consumed (kg)
H_c = heat of combustion of fuel (kJ/kg)
t_g = growth time (sec)

5.2.4.3 Steady Phase. The growth of an unsteady design fire shall be permitted to reach a steady heat release rate based on one of the following:

(1) Fire test data
(2) Engineering analysis of fire growth and sprinkler response

Copyright National Fire Protection Association
Provided by IHS under license with NFPA
No reproduction or networking permitted without license from IHS
Not for Resale

5.2.4.4* Decay Phase. The heat release rate of a design fire shall be permitted to decay based on one of the following:

(1) Fire test data
(2) Analysis of the effect of sprinkler protection on the fuel at the prevailing ceiling height

5.2.5* Separation Distance.

5.2.5.1 The design fire shall be determined by considering the type of fuel, fuel spacing, and configuration.

5.2.5.2 The selection of the design fire shall start with a determination of the base fuel package, which is the maximum probable size fuel package likely to be involved in fire.

5.2.5.3 The design fire shall be increased if other combustibles are within the separation distance, R, as determined from Equation 5.2.5.3 or 5.2.5.3a.

$$R = \left(\frac{Q}{12\pi q''} \right)^{1/2} \quad \textbf{(5.2.5.3)}$$

where:
R = separation distance from target to center of fuel package (ft)
Q = heat release rate from fire (Btu/sec)
q'' = incident radiant heat flux required for piloted ignition (Btu/ft^2·sec)

$$R = \left(\frac{Q}{12\pi q''} \right)^{1/2} \quad \textbf{(5.2.5.3a)}$$

where:
R = separation distance from target to center of fuel package (m)
Q = heat release rate from fire (kW)
q'' = incident radiant heat flux required for piloted ignition (kW/m^2)

5.2.5.4 If the base fuel package is not circular, an equivalent radius shall be calculated by equating the floor area covered by the fuel package with that subtended by a circle of the equivalent radius.

5.2.5.5 A value of 0.9 Btu/ft^2·sec (10 kW/m^2·sec) shall be used for the incident radiant heat flux required for piloted ignition unless another value is substantiated in accordance with approved test data.

5.3 Mass Consumption.

5.3.1 For a steady fire, the total mass consumption required to sustain the steady heat release rate shall be determined in accordance with Equation 5.3.1 or 5.3.1a as follows:

$$m = \frac{Q\Delta t}{H_c} \quad \textbf{(5.3.1)}$$

where:
m = total fuel mass consumed (lb)
Q = heat release rate (Btu/sec)
Δt = duration of fire (sec)
H_c = heat of combustion of fuel (Btu/lb)

$$m = \frac{Q\Delta t}{H_c} \quad \textbf{(5.3.1a)}$$

where:
m = total fuel mass consumed (kg)
Q = heat release rate (kW)
Δt = duration of fire (sec)
H_c = heat of combustion of fuel (kJ/kg)

5.3.2 For a t-squared fire, the total mass consumed shall be determined in accordance with Equation 5.3.2 or 5.3.2a as follows:

$$m = \frac{333\Delta t^3}{H_c t_g^2} \quad \textbf{(5.3.2)}$$

where:
m = total fuel mass consumed (lb)
Δt = duration of fire (sec)
H_c = heat of combustion of fuel (Btu/lb)
t_g = growth time (sec)

$$m = \frac{333\Delta t^3}{H_c t_g^2} \quad \textbf{(5.3.2a)}$$

where:
m = total fuel mass consumed (kg)
Δt = duration of fire (sec)
H_c = heat of combustion of fuel (kJ/kg)
t_g = growth time (sec)

5.4* Varying Cross-Sectional Geometries and Complex Geometries. When the large space has a nonuniform cross-sectional area, the design analysis shall take into account the variation of cross-sectional area with height.

5.5 Opposed Airflow.

5.5.1 Where opposed airflow is used to prevent smoke originating in a communicating space from propagating into the large-volume space as shown in Figure 5.5.1, the communicating space shall be exhausted at a sufficient rate to cause the average air velocity in the opening from the large-volume space to exceed the limiting average air velocity, v_e, calculated using Equation 5.5.1 or 5.5.1a as follows:

$$v_e = 38\left(gH\frac{T_f - T_o}{T_f} \right)^{1/2} \quad \textbf{(5.5.1)}$$

where:
v_e = limiting average air velocity (ft/min)
g = acceleration of gravity (32.2 ft/sec^2)
H = height of the opening as measured from the bottom of the opening (ft)
T_f = temperature of heated smoke (R)
T_o = temperature of ambient air (R)

$$v_e = 0.64\left(gH\frac{T_f - T_o}{T_f} \right)^{1/2} \quad \textbf{(5.5.1a)}$$

where:
v_e = limiting average air velocity (m/sec)
g = acceleration of gravity (9.81 m/sec^2)
H = height of the opening as measured from the bottom of the opening (m)
T_f = temperature of heated smoke (K)
T_o = temperature of ambient air (K)

Copyright National Fire Protection Association
Provided by IHS under license with NFPA
No reproduction or networking permitted without license from IHS
Not for Resale

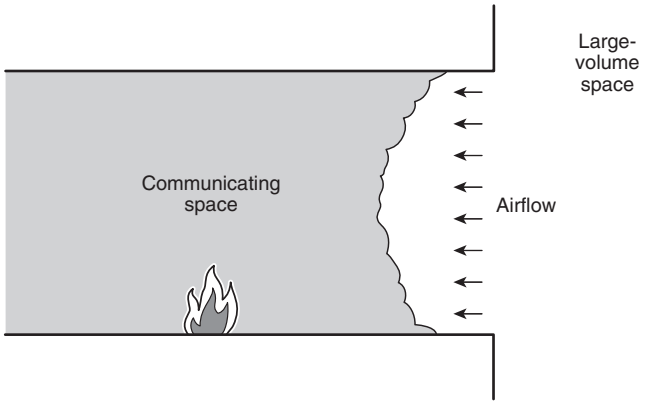

FIGURE 5.5.1 Use of Airflow to Prevent Smoke Propagation from a Communicating Space to a Large-Volume Space.

5.5.2 Where opposed airflow is used to prevent smoke originating from the plume within the large-volume space from propagating into a communicating space below the smoke layer interface as illustrated in Figure 5.5.2, air shall be supplied from the communicating space at the limiting average velocity, v_e, as calculated in accordance with Equation 5.5.2 or 5.5.2a as follows:

$$v_e = 17\left(\frac{Q}{z}\right)^{1/3} \qquad \textbf{(5.5.2)}$$

where:
v_e = limiting average air velocity (ft/min)
Q = heat release rate of the fire (Btu/sec)
z = distance above the base of the fire to the bottom of the opening (ft)

$$v_e = 0.057\left(\frac{Q}{z}\right)^{1/3} \qquad \textbf{(5.5.2a)}$$

where:
v_e = limiting average air velocity (m/sec)
Q = heat release rate of the fire (kW)
z = distance above the base of the fire to the bottom of the opening (m)

5.5.2.1 Where the limiting average air velocity, v_e, calculated from Equation 5.5.2 or 5.5.2a exceeds 200 ft/min (1.02 m/sec), the opposed airflow method shall not be used for the purpose of this section.

5.5.2.2 Equations 5.5.2 and 5.5.2a shall not be used when z is less than 10 ft (3 m).

5.5.3 Where opposed airflow is used to prevent smoke originating in the large-volume space from propagating into a communicating space above the smoke layer interface as shown in Figure 5.5.3, air shall be supplied from the communicating space at the limiting average velocity, v_e, as determined in accordance with Equation 5.5.3 or 5.5.3a as follows:

$$v_e = 38\left(gH\frac{T_f - T_o}{T_f}\right)^{1/2} \qquad \textbf{(5.5.3)}$$

where:
v_e = limiting average air velocity (ft/min)
g = acceleration of gravity (32.2 ft/sec^2)
H = height of the opening as measured from the bottom of the opening (ft)
T_f = temperature of heated smoke (R)
T_o = temperature of ambient air (R)

$$v_e = 0.64\left(gH\frac{T_f - T_o}{T_f}\right)^{1/2} \qquad \textbf{(5.5.3a)}$$

where:
v_e = limiting average air velocity (m/sec)
g = acceleration of gravity (9.81 m/sec^2)
H = height of the opening as measured from the bottom of the opening (m)
T_f = temperature of heated smoke (K)
T_o = temperature of ambient air (K)

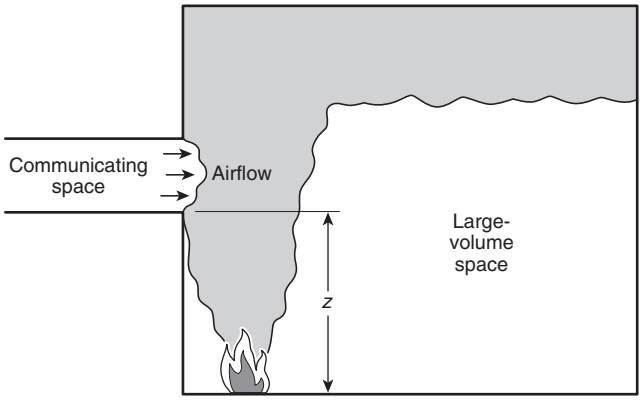

Note: The term z is the distance from the base of the fire to the bottom of the opening.

FIGURE 5.5.2 Use of Airflow to Prevent Smoke Propagation from the Plume Within the Large-Volume Space to a Communicating Space Located Below the Smoke Layer Interface.

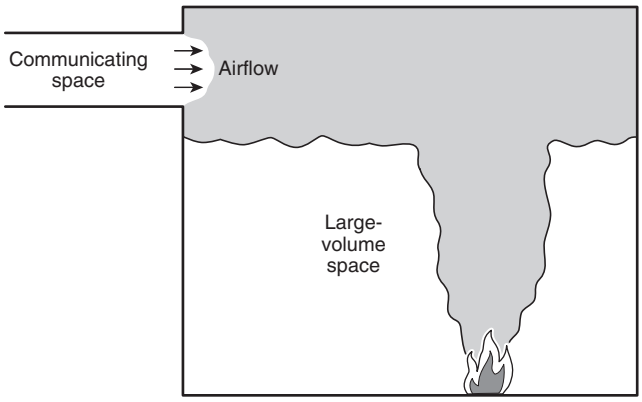

FIGURE 5.5.3 Use of Airflow to Prevent Smoke Propagation from a Large-Volume Space to a Communicating Space Located Above the Smoke Layer Interface.

--`,,,`-`-`,,`,,`,`,,`---
Copyright National Fire Protection Association
Provided by IHS under license with NFPA
No reproduction or networking permitted without license from IHS
Not for Resale

5.5.3.1 Where the limiting average air velocity, v_e, calculated from Equation 5.5.3 or 5.5.3a exceeds 200 ft/min (1.02 m/sec), the opposed airflow method shall not be used for the purpose of this section.

5.5.3.2 The mass flow rate of air supply from the communicating space shall be included in the design of the smoke exhaust for the large-volume space.

5.6* Scaling Laws.

5.6.1 The scale model shall be based on the relationships in Table 5.6.1.

Table 5.6.1 Scaling Expressions

Characteristic	Relationship
Geometric position	$x_m = x_F\,(l_m/l_F)$
Temperature	$T_m = T_F$
Pressure difference	$\Delta p_m = \Delta p_F\,(l_m/l_F)$
Velocity	$v_m = v_F\,(l_m/l_F)^{1/2}$
Total heat release rate	$Q_m = Q_F\,(l_m/l_F)^{5/2}$
Convective heat release rate	$Q_{c,m} = Q_{c,F}\,(l_m/l_F)^{5/2}$
Volumetric exhaust rate	$V_{fan,m} = V_{fan,F}\,(l_m/l_F)^{5/2}$
Time	$t_m = t_F\,(l_m/l_F)^{1/2}$

where:
l = length
Δp = pressure difference
Q = heat release rate
t = time
T = temperature (ambient and smoke)
v = velocity
V = volumetric exhaust rate
x = position
Subscripts:
c = convective
F = full-scale
m = small-scale model

5.6.2 The model shall be made large enough that the height of one story in the scale model, or the design height of the smoke interface, is no less than 1 ft (0.3 m).

Chapter 6 Algebraic Equations

6.1 Smoke Layer Calculations.

6.1.1* General. The position of the first indication of smoke at any time or the smoke layer interface height shall be determined from the relations in 6.1.2 and Section 6.2.

6.1.2 Height of First Indication of Smoke with No Smoke Exhaust Operating.

6.1.2.1* Steady Fires. Where all of the following conditions occur, the height of the first indication of smoke above the fire surface, z, shall be calculated using Equation 6.1.2.1 or 6.1.2.1a:

(1) Uniform cross-sectional areas with respect to height
(2) A/H^2 ratios in the range from 0.9 to 1
(3) $z/H > 0.2$
(4) Steady fires
(5) No smoke exhaust operating

$$\frac{z}{H} = 0.67 - 0.28 \ln\left(\frac{\frac{tQ^{1/3}}{H^{4/3}}}{\frac{A}{H^2}}\right) \qquad \textbf{(6.1.2.1)}$$

where:
z = distance above the base of the fire to the first indication of smoke (ft)
H = ceiling height above the fire surface (ft)
t = time (sec)
Q = heat release rate from steady fire (Btu/sec)
A = cross-sectional area of the space being filled with smoke (ft^2)

$$\frac{z}{H} = 1.11 - 0.28 \ln\left(\frac{\frac{tQ^{1/3}}{H^{4/3}}}{\frac{A}{H^2}}\right) \qquad \textbf{(6.1.2.1a)}$$

where:
z = distance above the base of the fire to the first indication of smoke (m)
H = ceiling height above the fire surface (m)
t = time (sec)
Q = heat release rate from steady fire (kW)
A = cross-sectional area of the space being filled with smoke (m^2)

6.1.2.2* Unsteady Fires. Where all of the following conditions occur, the descent of the height of the initial indication of smoke shall be calculated for t-squared fires using Equation 6.1.2.2 or 6.1.2.2a:

(1) Uniform cross-sectional areas with respect to height
(2) A/H^2 ratios in the range from 1 to 23
(3) $z/H > 0.2$
(4) Unsteady fires
(5) No smoke exhaust operating

$$\frac{z}{H} = 0.23\left(\frac{t}{t_g^{2/5} H^{4/5}\left(\frac{A}{H^2}\right)^{3/5}}\right)^{-1.45} \qquad \textbf{(6.1.2.2)}$$

where:
z = distance above the base of the fire to the first indication of smoke (ft)
H = ceiling height above the fire surface (ft)
t = time (sec)
t_g = growth time (sec)
A = cross-sectional area of the space being filled with smoke (ft^2)

$$\frac{z}{H} = 0.91\left(\frac{t}{t_g^{2/5} H^{4/5}\left(\frac{A}{H^2}\right)^{3/5}}\right)^{-1.45} \qquad \textbf{(6.1.2.2a)}$$

where:
z = distance above the base of the fire to the first indication of smoke (m)
H = ceiling height above the fire surface (m)
t = time (sec)
t_g = growth time (sec)
A = cross-sectional area of the space being filled with smoke (m^2)

Copyright National Fire Protection Association
Provided by IHS under license with NFPA
No reproduction or networking permitted without license from IHS
Not for Resale

6.2 Rate of Smoke Mass Production.

6.2.1 Axisymmetric Plumes.

6.2.1.1* Where the plume is axisymmetric, the mass rate of smoke production shall be calculated using Equations 6.2.1.1a, 6.2.1.1b, or 6.2.1.1c, or Equations 6.2.1.1a(1), 6.2.1.1b(1), or 6.2.1.1c(1) as follows:

$$z_l = 0.533 Q_c^{2/5} \quad \textbf{(6.2.1.1a)}$$

$$\text{when } z > z_l,\ m = \left(0.022 Q_c^{1/3} z^{5/3}\right) + 0.0042 Q_c \quad \textbf{(6.2.1.1b)}$$

$$\text{when } z \le z_l,\ m = 0.0208 Q_c^{3/5} z \quad \textbf{(6.2.1.1c)}$$

where:
z_l = limiting elevation (ft)
Q_c = convective portion of heat release rate (Btu/sec)
z = distance above the base of the fire to the smoke layer interface (ft)
m = mass flow rate in plume at height z (lb/sec)

$$z_l = 0.166 Q_c^{2/5} \quad \textbf{[6.2.1.1a(1)]}$$

$$\text{when } z > z_l,\ m = \left(0.071 Q_c^{1/3} z^{5/3}\right) + 0.0018 Q_c \quad \textbf{[6.2.1.1b(1)]}$$

$$\text{when } z \le z_l,\ m = 0.032 Q_c^{3/5} z \quad \textbf{[6.2.1.1c(1)]}$$

where:
z_l = limiting elevation (m)
Q_c = convective portion of heat release rate (kW)
z = distance above the base of the fire to the smoke layer interface (m)
m = mass flow rate in plume at height z (kg/sec)

6.2.1.2 Equations 6.2.1.1b, 6.2.1.1b(1), 6.2.1.1c, and 6.2.1.1c(1) shall not be used when the temperature rise above ambient ($T_p - T_o$) is less than 4°F (2.2°C). *(See 6.2.5.)*

6.2.2 Balcony Spill Plumes.

6.2.2.1* Where the smoke plume is a balcony spill plume, the mass rate of smoke production shall be calculated using either Equation 6.2.2.1 or 6.2.2.1a as follows:

$$m = 0.12\left(QW^2\right)^{1/3}\left(z_b + 0.25H\right) \quad \textbf{(6.2.2.1)}$$

where:
m = mass flow rate in plume (lb/sec)
Q = heat release rate of the fire (Btu/sec)
W = width of the plume as it spills under the balcony (ft)
z_b = height above the underside of the balcony to the smoke layer interface (ft)
H = height of balcony above base of fire (ft)

$$m = 0.36\left(QW^2\right)^{1/3}\left(z_b + 0.25H\right) \quad \textbf{(6.2.2.1a)}$$

where:
m = mass flow rate in plume (kg/sec)
Q = heat release rate of the fire (kW)
W = width of the plume as it spills under the balcony (m)
z_b = height above the underside of the balcony to the smoke layer interface (m)
H = height of balcony above base of fire (m)

6.2.2.2 Equations 6.2.2.1 and 6.2.2.1a shall not be used when the temperature rise above ambient ($T_p - T_o$) is less than 4°F (2.2°C). *(See 6.2.5.)*

6.2.2.3* The width of the plume, W, shall be permitted to be determined by considering the presence of any physical barriers such as draft curtains protruding below the balcony to restrict horizontal smoke migration under the balcony.

6.2.2.4 When draft curtains are used, they shall be perpendicular to the opening to channel smoke and extend below the balcony ceiling a distance of at least 10 percent of the floor to ceiling height of the balcony.

6.2.2.5 In the absence of any barriers, the equivalent width shall be calculated using Equation 6.2.2.5 or 6.2.2.5a as follows:

$$W = w + b \quad \textbf{(6.2.2.5)}$$

where:
W = width of the plume (ft)
w = width of the opening from the area of origin (ft)
b = distance from the opening to the balcony edge (ft)

$$W = w + b \quad \textbf{(6.2.2.5a)}$$

where:
W = width of the plume (m)
w = width of the opening from the area of origin (m)
b = distance from the opening to the balcony edge (m)

6.2.3* Window Plumes.

6.2.3.1* Where the smoke plume is a window plume, the total heat release rate of a ventilation-limited fire shall be calculated using Equation 6.2.3.1 or 6.2.3.1a as follows:

$$Q = 61.2 A_w H_w^{1/2} \quad \textbf{(6.2.3.1)}$$

where:
Q = heat release rate (Btu/sec)
A_w = area of ventilation opening (ft^2)
H_w = height of ventilation opening (ft)

$$Q = 1260 A_w H_w^{1/2} \quad \textbf{(6.2.3.1a)}$$

where:
Q = heat release rate (kW)
A_w = area of ventilation opening (m^2)
H_w = height of ventilation opening (m)

6.2.3.2* Where the smoke plume is a window plume, the mass entrainment for window plumes shall be determined using Equation 6.2.3.2 or 6.2.3.2a as follows:

$$m = \left[0.077\left(A_w H_w^{1/2}\right)^{1/3}\left(z_w + a\right)^{5/3}\right] + 0.18 A_w H_w^{1/2} \quad \textbf{(6.2.3.2)}$$

where:
m = mass flow rate plume at height z_w (lb/sec)
A_w = area of ventilation opening (ft^2)
H_w = height of ventilation opening (ft)
z_w = height above the top of the window (ft)
a = $[2.40 A_w^{2/5} H_w^{1/5}] - 2.1 H_w$ (ft)

Copyright National Fire Protection Association
Provided by IHS under license with NFPA
No reproduction or networking permitted without license from IHS
Not for Resale

$$m = \left[0.068\left(A_w H_w^{1/2}\right)^{1/3}\left(z_w + a\right)^{5/3}\right] + 1.59 A_w H_w^{1/2} \quad \textbf{(6.2.3.2a)}$$

where:
m = mass flow rate plume at height z_w (kg/sec)
A_w = area of ventilation opening (m^2)
H_w = height of ventilation opening (m)
z_w = height above the top of the window (m)
a = $[2.40 A_w^{2/5} H_w^{1/5}] - 2.1 H_w$ (m)

6.2.3.3 Equations 6.2.1.1b, 6.2.1.1c, 6.2.2.1, and 6.2.3.2 shall not be used when the temperature rise above ambient ($T_p - T_o$) is less than 4°F (2.2°C). *(See 6.2.5.)*

6.2.4* Axisymmetric Plume Diameter. The diameter of an axisymmetric plume shall be calculated using Equation 6.2.4 or 6.2.4a as follows:

$$d_p = K_d \cdot z \quad \textbf{(6.2.4)}$$

where:
d_p = axisymmetric plume diameter (ft)
K_d = diameter constant
z = distance above the base of the fire (ft)

The diameter constant can range from 0.25 to 0.5, and the following values shall be used:

(1) $K_d = 0.5$ for plume contact with walls
(2) $K_d = 0.25$ for beam detection of the smoke plume

$$d_p = K_d \cdot z \quad \textbf{(6.2.4a)}$$

where:
d_p = axisymmetric plume diameter (m)
K_d = diameter constant
z = distance above the base of the fire (m)

6.2.5* Average Plume Temperature. The average temperature of the plume above the flame shall be determined in accordance with Equation 6.2.5 or 6.2.5a as follows:

$$T_p = T_o + \frac{Q_c}{mC_p} \quad \textbf{(6.2.5)}$$

where:
T_p = average plume temperature at elevation z (°F)
T_o = ambient temperature (°F)
Q_c = convective portion of heat release (Btu/sec)
m = mass flow rate of the plume at elevation z (lb/sec)
C_p = specific heat of plume gases (0.24 Btu/lb-°F)

$$T_p = T_o + \frac{Q_c}{mC_p} \quad \textbf{(6.2.5a)}$$

where:
T_p = average plume temperature at elevation z (°C)
T_o = ambient temperature (°C)
Q_c = convective portion of heat release (kW)
m = mass flow rate of the plume at elevation z (kg/sec)
C_p = specific heat of plume gases (1.0 kJ/kg-°C)

6.3* Number of Exhaust Inlets.

6.3.1 The minimum number of exhaust inlets shall be determined so that the maximum flow rates for exhaust without plugholing are not exceeded.

6.3.2 More than the minimum number of exhaust inlets required shall be permitted.

6.3.3* The maximum volumetric flow rate that can be exhausted by a single exhaust inlet without plugholing shall be calculated using Equation 6.3.3 or 6.3.3a.

$$V_{\max} = 452 \gamma d^{5/2}\left(\frac{T_s - T_o}{T_o}\right)^{1/2} \quad \textbf{(6.3.3)}$$

where:
$V_{\max}$ = maximum volumetric flow rate without plugholing at T_s (ft^3/min)
γ = exhaust location factor (dimensionless)
d = depth of smoke layer below the lowest point of the exhaust inlet (ft)
T_s = absolute temperature of the smoke layer (R)
T_o = absolute ambient temperature (R)

$$V_{\max} = 4.16 \gamma d^{5/2}\left(\frac{T_s - T_o}{T_o}\right)^{1/2} \quad \textbf{(6.3.3a)}$$

where:
$V_{\max}$ = maximum volumetric flow rate without plugholing at T_s (m^3/sec)
γ = exhaust location factor (dimensionless)
d = depth of smoke layer below the lowest point of the exhaust inlet (m)
T_s = absolute temperature of the smoke layer (K)
T_o = absolute ambient temperature (K)

6.3.4* For exhaust inlets centered no closer than twice the diameter from the nearest wall, a value of 1 shall be used for γ.

6.3.5* For exhaust inlets centered less than twice the diameter from the nearest wall, a value of 0.5 shall be used for γ.

6.3.6* For exhaust inlets on a wall, a value of 0.5 shall be used for the value of γ.

6.3.7* The ratio d/D_i shall be greater than 2, where D_i is the diameter of the inlet.

6.3.8 For rectangular exhaust inlets, D_i shall be calculated using Equation 6.3.8.

$$D_i = \frac{2ab}{a+b} \quad \textbf{(6.3.8)}$$

where:
a = length of the inlet
b = width of the inlet

6.3.9 Where multiple exhaust inlets are required to prevent plugholing *(see 6.3.1)*, the minimum separation distance shall be calculated using Equation 6.3.9 or 6.3.9a as follows:

$$S_{\min} = 0.065 V_e^{1/2} \quad \textbf{(6.3.9)}$$

where:
$S_{\min}$ = minimum edge-to-edge separation between inlets (ft)
V_e = volumetric flow rate of one exhaust inlet (ft^3/min)

Copyright National Fire Protection Association
Provided by IHS under license with NFPA
No reproduction or networking permitted without license from IHS
Not for Resale

$$S_{min} = 0.9V_e^{1/2} \quad \textbf{(6.3.9a)}$$

where:
S_{min} = minimum edge-to-edge separation between inlets (m)
V_e = volumetric flow rate of one exhaust inlet (m^3/sec)

6.4* Volumetric Flow Rate. The volumetric flow rate at the smoke layer temperature shall be determined using Equation 6.4 or 6.4a as follows:

$$V = 60\frac{m}{\rho} \quad \textbf{(6.4)}$$

where:
V = volumetric flow rate of smoke exhaust (ft^3/min)
m = mass flow rate of smoke exhaust (lb/sec)
ρ = density of smoke (lb/ft^3)

$$V = \frac{m}{\rho} \quad \textbf{(6.4a)}$$

where:
V = volumetric flow rate of smoke exhaust (m^3/sec)
m = mass flow rate of smoke exhaust (kg/sec)
ρ = density of smoke (kg/m^3)

Chapter 7 Equipment and Controls

7.1 Smoke Dampers.

7.1.1 Smoke dampers shall be listed in accordance with UL 555S, *Standard for Smoke Dampers*.

7.1.2 Combination fire and smoke dampers shall be listed in accordance with UL 555, *Standard for Fire Dampers,* and UL 555S, *Standard for Smoke Dampers*.

7.2* Makeup Air System. For systems with makeup air supplied by fans, supply fan actuation shall be sequenced with exhaust fan activation.

7.3* Control Systems.

7.3.1 General. Control systems shall be listed in accordance with UL 864, *Standard for Control Units and Accessories for Fire Alarm Systems*, category UUKL for their intended purpose.

7.3.2 Coordination. The control system shall fully coordinate the smoke management system interlocks and interface with other related systems.

7.3.3 HVAC System Controls. Operating controls for the HVAC system shall accommodate the smoke management mode, which shall have the highest priority over all other control modes.

7.3.4 Response Time. The total response time, including that necessary for detection, shutdown of operating equipment, and smoke management system start-up, shall allow for full operational mode to be achieved before the conditions in the space exceed the design smoke conditions.

7.3.5 Sequencing. The smoke management system shall activate individual components, such as dampers and fans, in sequence as necessary to avoid physical damage to the equipment.

7.3.6* Control System Verification and Instrumentation.

7.3.6.1 A means shall be provided to indicate a trouble condition if the system does not operate as intended when activated.

7.3.6.2 Failure to receive positive confirmation after activation or cessation of such positive confirmation while the system or subsystem remains activated shall result in an off-normal indication at the smoke control system within 200 seconds.

7.3.7* Manual Control. Manual control of smoke management and fire alarm systems shall be provided at a single location.

7.3.8 Operational Capability. Operational capability of smoke management equipment shall be verified using the weekly self-test function provided by the UUKL-listed smoke control panel mandated by 7.3.1.

7.4* Electrical Services. Electrical installations shall meet the requirements of NFPA 70, *National Electrical Code*.

7.5 Materials.

7.5.1 Ducts intended to convey smoke and the duct materials shall conform to NFPA 90A, *Standard for the Installation of Air-Conditioning and Ventilating Systems*, and other applicable NFPA documents.

7.5.2 Ducts that are part of a smoke management system shall be designed, selected, and constructed to withstand the positive and negative pressures to which they are subjected when operating in a smoke management mode.

7.5.3 Equipment, including, but not limited to, fans, ducts, and balance dampers, shall be suitable for its intended use and the probable temperatures to which it might be exposed.

Chapter 8 Testing

8.1 General.

8.1.1* Each system shall be tested against its specific design criteria using component system testing, acceptance testing, and periodic testing and maintenance.

8.1.2 Construction documents shall include all acceptance testing procedures and pass/fail criteria.

8.2 Component System Testing.

8.2.1* Responsibility for testing shall be defined clearly prior to component system testing.

8.2.2 Prior to testing, the party responsible for testing shall verify completeness of building construction, including the following architectural features:

(1) Smoke barriers including joints therein
(2) Firestopping
(3) Doors and closers related to smoke control
(4) Glazing that encloses a large-volume space

8.2.3* Operational testing of each individual system component shall be performed.

8.2.4* Testing shall include all subsystems to the extent that they affect or are affected by the operation of the smoke management system.

8.2.5 All documentation from component system testing shall be available for inspection.

--`,,```-`-`,,`,,`,`,,`---
Copyright National Fire Protection Association
Provided by IHS under license with NFPA
No reproduction or networking permitted without license from IHS
Not for Resale

8.3 Acceptance Testing.

8.3.1* General. Acceptance testing shall demonstrate that the final integrated system installation complies with the specific design and is functioning properly.

8.3.2 Test Parameters. Where appropriate to the design, the following parameters shall be measured during acceptance testing:

(1) Total volumetric flow rate
(2) Airflow velocities
(3) Airflow direction
(4) Door-opening forces
(5) Pressure differences
(6) Ambient indoor and outdoor temperatures
(7) Wind speed and direction

8.3.3 Measurement Locations. The locations for measurement of the parameters identified in 8.3.2 shall be in accordance with nationally recognized methods.

8.3.4 Testing Procedures. The acceptance testing shall include the procedures described in 8.3.4.1 through 8.3.4.5.

8.3.4.1* Prior to beginning acceptance testing, all building equipment shall be placed in the normal operating mode, including equipment that is not used to implement smoke management.

8.3.4.2* If standby power has been provided for the operation of the smoke management system, the acceptance testing shall be conducted while on both normal and standby power.

8.3.4.3 The acceptance testing shall include demonstrating that the correct outputs are produced for a given input for each control sequence specified.

8.3.4.4 The complete smoke management sequence shall be demonstrated for the following:

(1) Normal mode
(2) Automatic smoke management mode for first alarm
(3) Manual override of normal and automatic smoke management modes
(4) Return to normal

8.3.4.5* Acceptance tests for the fire protective signaling system in conjunction with the smoke management system shall be permitted.

8.3.5* System Testing.

8.3.5.1 Specific smoke management performance criteria shall be developed by the system designer and described in the construction documents.

8.3.5.2 Acceptance testing to verify system performance shall include the following:

(1) Prior to performance testing, verify the exact location of the perimeter of each large-volume space smoke management system, identify any door openings into that space, and identify all adjacent areas that are to remain open and that are to be protected by airflow alone. For larger openings, measure the velocity by making appropriate traverses of the opening.
(2) Activate the smoke management system. Verify and record the operation of all fans, dampers, doors, and related equipment. Measure fan exhaust capacities and air velocities through inlet doors and grilles or at supply grilles if there is a mechanical makeup air system. Measure the force to open exit doors.
(3) Where appropriate to the design, measure and record the pressure difference across all doors that separate the smoke management system area from adjacent spaces and the velocities at interfaces with open areas.

8.3.6 Testing Documentation.

8.3.6.1 Upon completion of acceptance testing, a copy of all operational testing documentation shall be provided to the owner.

8.3.6.2 This documentation shall be available for reference for periodic testing and maintenance.

8.3.7 Owner's Manuals and Instruction. Information shall be provided to the owner that defines the operation and maintenance of the system.

8.3.8 Modifications.

8.3.8.1 All operation and acceptance tests shall be performed on the applicable part of the system wherever there are system changes and modifications.

8.3.8.2 Documentation shall be updated to reflect these changes or modifications.

8.4 Periodic Testing.

8.4.1* Proper maintenance of the system shall, as a minimum, include the periodic testing of all equipment, such as initiating devices, fans, dampers, controls, doors, and windows.

8.4.2* The equipment shall be maintained in accordance with the manufacturer's recommendations.

8.4.3 The periodic tests shall determine the airflow quantities and the pressure differences at the following locations:

(1) Across smoke barrier openings
(2) At the air makeup supplies
(3) At smoke exhaust equipment

8.4.4 All data points shall coincide with the acceptance test location to facilitate comparison measurements.

8.4.5 The system shall be tested at least semiannually by persons who are thoroughly knowledgeable in the operation, testing, and maintenance of the systems.

8.4.5.1 The results of the tests shall be documented in the operations and maintenance log and made available for inspection.

8.4.5.2 The smoke management system shall be operated for each sequence in the current design criteria.

8.4.5.3 The operation of the correct outputs for each given input shall be observed.

8.4.5.4 Tests shall also be conducted under standby power if applicable.

8.4.6* Special arrangements shall be considered for the introduction of large quantities of outside air into occupied areas or computer centers when outside temperature and humidity conditions are extreme and when such unconditioned air could damage contents.

Chapter 9 Design Documentation

9.1* Documentation Required. The following documents shall be generated by the designer during the design process:

(1) Detailed design report
(2) Operations and maintenance manual

--`,,`,,`-`-`,,`,,`,`,,`---

Copyright National Fire Protection Association
Provided by IHS under license with NFPA
No reproduction or networking permitted without license from IHS
Not for Resale

9.2 Detailed Design Report. The detailed design report shall provide documentation of the smoke management system as it is designed and intended to be installed, along with supporting calculations.

9.3 Operations and Maintenance Manual. The operations and maintenance manual shall provide the requirements to ensure the proper operation of the system over the life of the building.

9.3.1 The manual shall include the following:

(1) Procedures used in the initial commissioning of the system as well as the measured performance of the system at the time of commissioning
(2) Testing and inspection requirements for the system and system components and the required frequency of testing
(3) Critical design assumptions used in the design, and the limitations on the building and its use that arise out of the design assumptions and limitations

9.3.2 Copies of the operations and maintenance manual shall be provided to the owner and the authority having jurisdiction.

9.3.3 The building owner shall be responsible for all system testing and shall maintain records of all periodic testing and maintenance in accordance with the operations and maintenance manual.

9.3.4 The building owner shall be responsible for limiting the use of the space in a manner consistent with the limitations provided in the operations and maintenance manual.

Annex A Explanatory Material

Annex A is not a part of the requirements of this NFPA document but is included for informational purposes only. This annex contains explanatory material, numbered to correspond with the applicable text paragraphs.

A.1.1 This standard incorporates methods for applying engineering calculations and reference models to provide a designer with the tools to develop smoke management system designs. The designs are based on select design objectives presented in Section 4.1.

Previous editions of this document were presented as a guide. Now that the document has been reformatted as a standard, much of the guidance material has been relocated to the annexes. This relocated material offers the designer better understanding of the principles of smoke management and optional approaches that can be followed by an experienced designer.

The objective of this standard is to provide owners, designers, code authorities, and fire departments with a method for managing smoke in large-volume, noncompartmented spaces. This standard addresses the following:

(1) Basic physics of smoke movement in indoor spaces
(2) Methods of smoke management
(3) Supporting data and technology
(4) Building equipment and controls applicable to smoke management systems
(5) Approaches to test and maintenance methods

The requirements of the standard specifically apply to malls, atria, and other large spaces where the fuel loading is reasonably quantified and the mechanisms of smoke management can be reasonably calculated from formulas and empirical analysis.

This standard does not address the interaction of sprinklers and smoke management systems. The cooling effect of sprinklers results in some of the smoke losing buoyancy and migrating downward below the design smoke layer interface. This effect is more pronounced when early suppression fast response (ESFR) sprinkler technology is used.

Even with a sprinkler system and water supply adequate for the type and arrangement of storage, the heat release rates from a controlled warehouse fire can be considerably greater than that noted in this standard. Accurate heat release data are not readily available at this time for many storage configurations or a sprinkler-controlled rack storage fire. In such cases the horizontal fire spread is limited, but the fire typically spreads to the vertical limit of combustible storage (up the face and within the flues of storage). In most cases where the clearance between the roof and the top of storage is limited [≤ 10 ft (3 m)], it is expected that the flames will extend vertically into the smoke layer.

In some circumstances, it is possible to remove smoke by gravity venting. The capacity of gravity vents to move smoke through a vent is a function of both the depth and the temperature of the hot layer. Procedures for determining the capabilities of gravity venting are contained in NFPA 204, *Standard for Smoke and Heat Venting*. That document, rather than this, is to be used to the extent that gravity venting is considered.

A.1.2.1 In addition to the purposes listed, smoke management systems can also be used for the following purposes:

(1) Provide conditions within and outside the fire zone to assist emergency response personnel in conducting search and rescue operations and in locating and controlling the fire
(2) Contribute to the protection of life and reduction of property loss
(3) Aid in post-fire smoke removal

A.3.2.1 Approved. The National Fire Protection Association does not approve, inspect, or certify any installations, procedures, equipment, or materials; nor does it approve or evaluate testing laboratories. In determining the acceptability of installations, procedures, equipment, or materials, the authority having jurisdiction may base acceptance on compliance with NFPA or other appropriate standards. In the absence of such standards, said authority may require evidence of proper installation, procedure, or use. The authority having jurisdiction may also refer to the listings or labeling practices of an organization that is concerned with product evaluations and is thus in a position to determine compliance with appropriate standards for the current production of listed items.

A.3.2.2 Authority Having Jurisdiction (AHJ). The phrase "authority having jurisdiction," or its acronym AHJ, is used in NFPA documents in a broad manner, since jurisdictions and approval agencies vary, as do their responsibilities. Where public safety is primary, the authority having jurisdiction may be a federal, state, local, or other regional department or individual such as a fire chief; fire marshal; chief of a fire prevention bureau, labor department, or health department; building official; electrical inspector; or others having statutory authority. For insurance purposes, an insurance inspection department, rating bureau, or other insurance company representative may be the authority having jurisdiction. In many circumstances, the property owner or his or her designated agent assumes the role of the authority having jurisdiction; at government installations, the commanding officer or departmental official may be the authority having jurisdiction.

Copyright National Fire Protection Association
Provided by IHS under license with NFPA
No reproduction or networking permitted without license from IHS
Not for Resale

A.3.2.4 Listed. The means for identifying listed equipment may vary for each organization concerned with product evaluation; some organizations do not recognize equipment as listed unless it is also labeled. The authority having jurisdiction should utilize the system employed by the listing organization to identify a listed product.

A.3.3.2 Ceiling Jet. Normally, the temperature of the ceiling jet is greater than the adjacent smoke layer.

A.3.3.3 Communicating Space. Communicating spaces can open directly into the large-volume space or can connect through open passageways.

A.3.3.8 First Indication of Smoke. See Figure A.3.3.8.

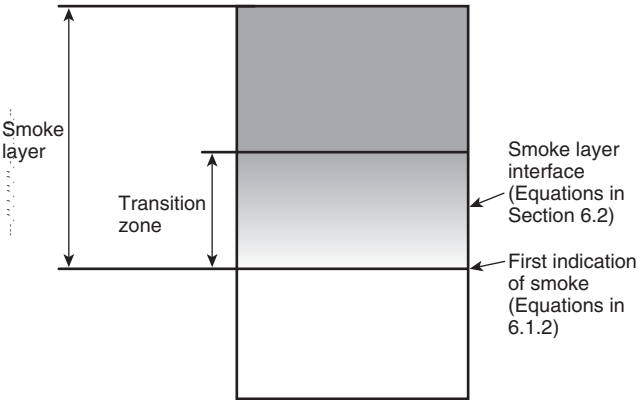

FIGURE A.3.3.8 First Indication of Smoke.

For design evaluations using the algebraic approach outlined in Chapter 6, the first indication of smoke can be determined using Equations 6.1.2.1 and 6.1.2.2.

For design evaluations using physical or CFD modeling, a method to define the smoke interface height and the first indication of smoke using a limited number of point measurements over the height of the atrium is required. One approach [14, 52] uses linear interpolation of the point measurements. Using temperature data, the interfaces are at the heights at which the temperature is as follows:

$$T_n = C_n\left(T_{\max} - T_b\right) + T_b \qquad \textbf{(A.3.3.8)}$$

where:

T_n = temperature at the interface height
C_n = interpolation constant with values of 0.1–0.2 for the first indication of smoke and 0.8–0.9 for the smoke layer interface, respectively
$T_{\max}$ = temperature in the smoke layer
T_b = temperature in the cold lower layer

A.3.3.12 Plume. A plume entrains air as it rises so that the mass flow of the plume increases with height and the temperature and other smoke properties of the plume decrease with height.

A.3.3.12.1 Axisymmetric Plume. Strictly speaking, an axisymmetric plume only applies to round fires, but it is a useful idealization for fires of many other shapes. When the largest dimension of a fire is much less than the height of the plume, the plume mass flow and temperature can be approximated by those characteristics of an axisymmetric plume.

An axisymmetric plume *(see Figure A.3.3.12.1)* is expected for a fire originating on the atrium floor, removed from any walls. In this case, air is entrained from all sides along the entire height of the plume until the plume becomes submerged in the smoke layer.

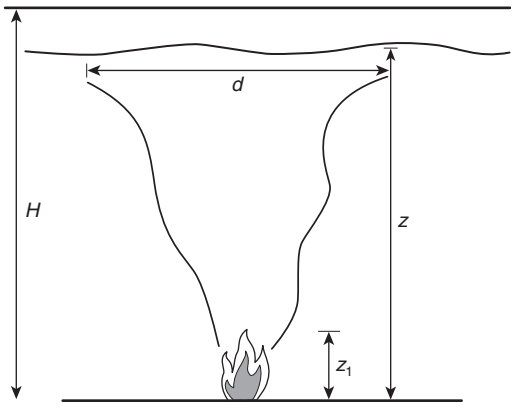

FIGURE A.3.3.12.1 An Approximation of an Axisymmetric Plume.

A.3.3.12.2 Balcony Spill Plume. A balcony spill plume is one that flows under and around a balcony before rising, giving the impression of spilling from the balcony, from an inverted perspective, as illustrated in Figure A.3.3.12.2.

A.3.3.12.3 Window Plume. Plumes issuing from wall openings, such as doors and windows of an adjacent compartment, into a large-volume, open space are referred to as window plumes *(see Figure A.3.3.12.3)*. Window plumes usually occur when the adjacent compartment is fully involved in a fire typically after the compartment has reached flashover.

A.3.3.15 Smoke Barrier. A smoke barrier might or might not have a fire resistance rating. Such barriers might have protected openings. Smoke barriers as used with smoke control or smoke management systems described in this standard could have openings protected either by physical opening protectives or by pressure differences created by the smoke control or smoke management system. Smoke barriers described in some other codes and standards might require that the openings be protected by physical opening protectives.

A.3.3.17 Smoke Layer. The smoke layer includes a transition zone that is nonhomogeneous and separates the hot upper layer from the smokefree air.

The smoke layer is not a homogeneous mixture, nor does it have a uniform temperature. The calculation methods presented can assume homogeneous conditions.

A.3.3.18 Smoke Layer Interface. The smoke layer interface is depicted in Figure A.3.3.8. In practice, the smoke layer interface is an effective boundary within a transition buffer zone, which can be several feet (meters) thick. Below this effective boundary, the smoke density in the transition zone decreases to zero. This height is used in the application of Equations 6.2.3.1, 6.2.3.2, 6.2.4, and 6.4.

A.3.3.22 Transition Zone. See Figure A.3.3.8 for further details.

A.4.1.2 See Annex G for additional information about objectives for smoke management systems.

Copyright National Fire Protection Association
Provided by IHS under license with NFPA
No reproduction or networking permitted without license from IHS
Not for Resale

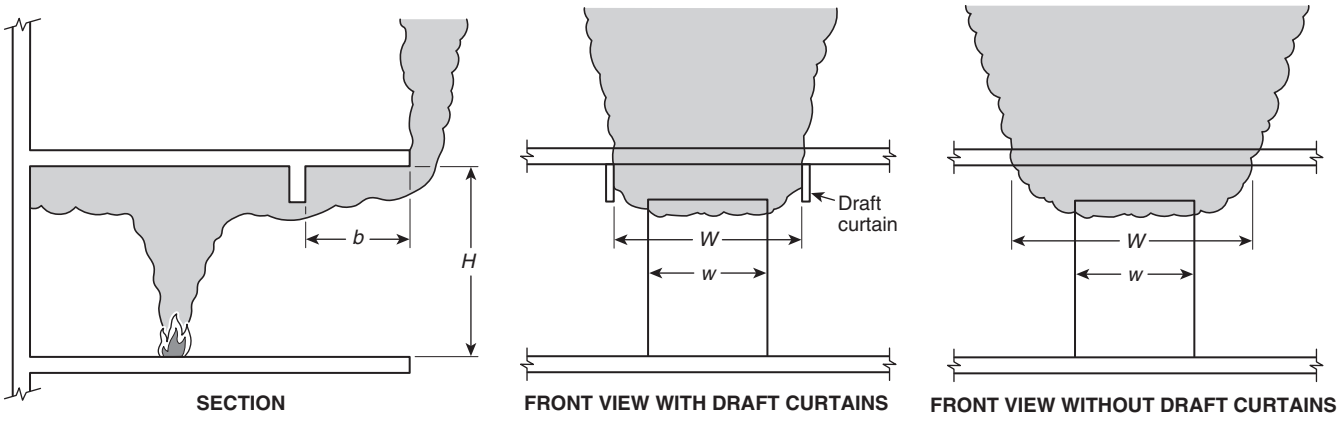

FIGURE A.3.3.12.2 An Approximation of a Balcony Spill Plume.

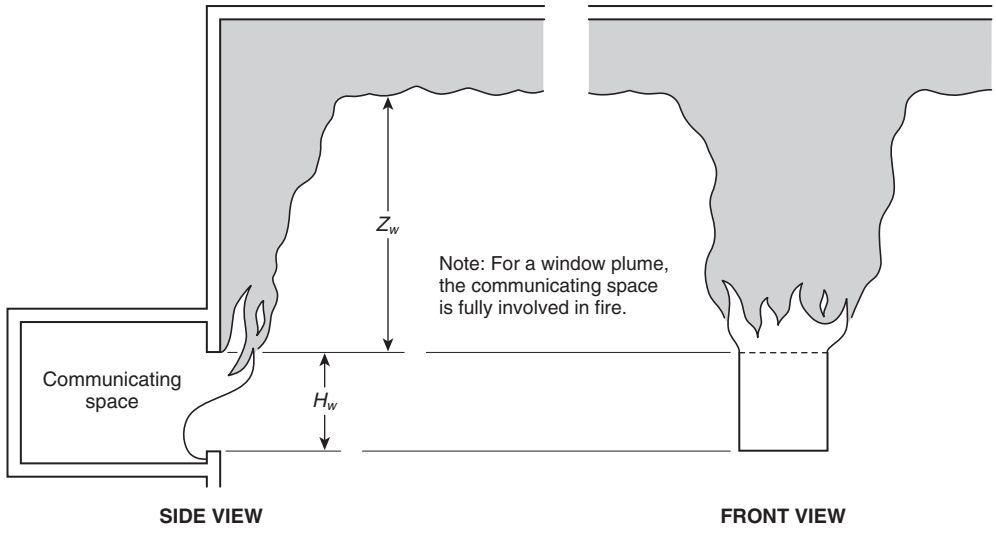

FIGURE A.3.3.12.3 An Approximation of a Window Plume.

A.4.3.1 The design approaches are intended to either prevent people from coming into contact with smoke or maintain a tenable environment when people come into contact with smoke.

A.4.3.1(2) An equilibrium position for the smoke layer interface can be achieved by exhausting the same rate of smoke as is supplied to the smoke layer.

A.4.4.1.1 The depth of the smoke layer depends on many factors, and this depth generally ranges from 10 percent to 20 percent of the floor to ceiling height. An engineering analysis of the depth of the smoke layer can be done by comparison with full scale experimental data, scale modeling, or CFD modeling.

A.4.4.2.1(2) NFPA 92A, *Recommended Practice for Smoke-Control Systems*, provides guidance on the use of walls to restrict smoke migration.

A.4.4.2.2 Fires in communicating spaces can produce buoyant gases that spill into the large space. The design for this case is analogous to the design for a fire in the large space. However, the design has to consider the difference in entrainment behavior between an axisysmmetric plume and a spill plume. If communicating open spaces are protected by automatic sprinklers, the calculations set forth in this standard might show that no additional venting is required. Alternatively, whether or not communicating spaces are sprinklered, smoke can be prevented from spilling into the large space if the communicating space is exhausted at a rate to cause a sufficient inflow velocity across the interface to the large space.

A.4.6 Makeup air has to be provided to ensure that the exhaust fans are able to move the design air quantities and to ensure that door opening force requirements are not exceeded.

Copyright National Fire Protection Association
Provided by IHS under license with NFPA
No reproduction or networking permitted without license from IHS
Not for Resale

The large openings to the outside can consist of open doors, open windows, and open vents. The large openings to the outside do not include cracks in the construction, gaps around closed doors, gaps around closed windows, and other small paths. It is recommended that makeup air be designed at 85 percent to 95 percent of the exhaust not including the leakage through these small paths. This is based on the experience that the remaining air (5 percent to 15 percent) to be exhausted will enter the large-volume space as leakage through the small paths. The reason that less makeup air is supplied than is being exhausted is to avoid positively pressurizing the large-volume space.

A.4.6.4 The maximum value of 200 ft/min (1.02 m/sec) for makeup air is to prevent significant plume deflection and disruption of the smoke interface. An engineering analysis of the effect of a higher makeup air velocity can be done by comparison with full-scale experimental data, scale modeling, or CFD modeling. The maximum makeup air velocity is based on flame deflection data [63]. Where maintaining a smoke layer height is not a design goal, plume disruption due to supply velocity might not be detrimental.

A.4.8 The temperature differences between the exterior and interior of the building cause stack effect and determine the stack effect's direction and magnitude. The stack effect has to be considered when selecting exhaust fans. The effect of temperature and wind velocity varies with building height, configuration, leakage, and openings in wall and floor construction.

One source of weather data is the ASHRAE *Handbook of Fundamentals*, Chapter 26, Climatic Design Information. The 99.6 percent heating dry bulb (DB) temperature and the 0.4 percent cooling DB temperature are suggested to be used as the winter and summer design conditions, respectively. The 1 percent extreme wind velocity is also suggested to be used as the design condition. Where available, more site-specific wind data should be consulted.

A.4.9 See Annex H for additional information on the stratification of smoke.

A.4.9(1) The purpose of using an upward beam to detect the smoke layer is to quickly detect the development of a smoke layer at whatever temperature condition exists. One or more beams should be aimed at an upward angle to intersect the smoke layer regardless of the level of smoke stratification. More than one beam smoke detector should be used. Manufacturer's recommendations should be reviewed when using these devices for this application. Devices installed in this manner can require additional maintenance activity.

A.4.9(2) The purpose of using horizontal beams to detect the smoke layer at various levels is to quickly detect the development of a smoke layer at whatever temperature condition exists. One or more beam detectors are located at the ceiling. Additional detectors are located at other levels lower in the volume. The exact positioning of the beams is a function of the specific design but should include beams at the bottom of any identified unconditioned (dead-air) spaces and at or near the design smoke level with intermediate beam positions at other levels.

A.4.9(3) The purpose of using horizontal beams to detect the smoke plume is to detect the rising plume rather than the smoke layer. For this approach, an arrangement of beams close enough to each other to assure intersection of the plume is installed at a level below the lowest expected stratification level. The spacing between beams has to be based on the narrowest potential width of the plume at the level of detection.

A.5.1 Scale modeling uses a reduced scale physical model following established scaling laws, whereby small-scale tests are conducted to determine the requirements and capabilities of the modeled smoke management system.

Algebraic, closed-form equations are derived primarily from the correlation of large- and small-scale experimental results.

Compartment fire models use both theory and empirically derived values to estimate conditions in a space.

Each approach has advantages and disadvantages. Although the results obtained from the different approaches should normally be similar, they are usually not identical. The state of the art while advanced, is empirically based, and a final theory provable in fundamental physics has not yet been developed. The core of each calculation method is based on the entrainment of air (or other surrounding gases) into the rising fire-driven plume. A variation of approximately 20 percent in entrainment occurs between the empirically derived entrainment equations commonly used, such as those indicated in Chapter 6, or in zone fire models. Users can add an appropriate safety factor to exhaust capacities to account for this uncertainty.

A.5.1.1 Scale modeling is especially desirable where the space being evaluated has projections or other unusual arrangements that prevent a free-rising plume. This approach is expensive, time-consuming, and valid only within the range of tests conducted. Because this approach is usually reserved for complex structures, it is important that the test series cover all of the potential variations in factors such as position and size of fire, location and capacity of exhaust and intake flows, variations in internal temperature (stratification or floor–ceiling temperature gradients), and other variables. It is likely that detection will not be appraisable using scale models.

A.5.1.2 The equations presented in Chapter 6 are considered to be the most accurate, simple algebraic expressions available for the proposed purposes. In general, they are limited to cases involving fires that burn at a constant rate of heat release ("steady fires") or fires that increase in rate of heat release as a function of the square of time ("unsteady fires"). The equations are not appropriate for other fire conditions or for a condition that initially grows as a function of time but then, after reaching a maximum, burns at a steady state. In most cases, judicious use of the equations can reasonably overcome this limitation. Each of the equations has been derived from experimental data. In some cases, the test data are limited or have been collected within a limited set of fire sizes, space dimensions, or points of measurement. Where possible, comments are included on the range of data used in deriving the equations presented. It is important to consider these limits.

Caution should be exercised in using the equations to solve the variables other than the ones presented to the left of the equal sign, unless it is clear how sensitive the result is to minor changes in any of the variables involved. If these restrictions present a limit that obstructs the users' needs, consideration should be given to combining the use of equations with either scale or compartment fire models. Users of the equations should appreciate the sensitivity of changes in the variables being solved.

--`,,,````-`-`,,`,,`,`,,`---

Copyright National Fire Protection Association
Provided by IHS under license with NFPA
No reproduction or networking permitted without license from IHS
Not for Resale

A.5.1.3 Computer capabilities sufficient to execute some of the family of compartment fire models are widely available. All compartment fire models solve the conservation equations for distinct regions (control volumes). Compartment fire models can be classified as zone fire models or computational fluid dynamics (CFD) models.

Verifying computer fire model results is important because it is sometimes easier to obtain results than to determine their accuracy. Computer fire model results have been verified over a limited range of experimental conditions [73, 82, 18]; review of these results should provide the user with a level of confidence. However, because the very nature of a fire model's utility is to serve as a tool for investigating unknown conditions, there will be conditions for which any model has yet to be verified. It is for these conditions that the user should have some assistance in judging the model's accuracy.

There are three areas of understanding that greatly aid accurate fire modeling of unverified conditions. The first area involves understanding what items are being modeled. The second area involves appropriately translating the real-world items into fire model input. The third area involves understanding the model conversion of input to output.

A.5.2.1 A design fire size of approximately 5000 Btu/sec (5275 kW) for mercantile occupancies is often referenced [58]. This is primarily based on a statistical distribution of fire sizes in shops (retail stores) in the United Kingdom that included sprinkler protection. Less than 5 percent of fires in this category exceeded 5000 Btu/sec. Geometrically, a 5000 Btu/sec (5275 kW) fire in a shop has been described as a 10 ft × 10 ft (3.1 m × 3.1 m) area resulting in an approximate heat release rate per unit area of 50 Btu/sec-ft^2 (568 kW/m^2).

Automatic suppression systems are designed to limit the mass burning rate of a fire and will, therefore, limit smoke generation. By limiting the mass burning rate of a fire, smoke generation will be reduced. Fires in sprinklered spaces adjacent to atria and covered mall pedestrian areas can also be effectively limited to reduce the effect on atrium spaces or covered mall pedestrian areas and thus increase the viability of a smoke management system.

The likelihood of sprinkler activation is dependent on many factors, including heat release rate of the fire and the ceiling height. Thus, for modest fire sizes, sprinkler operation is most likely to occur in a reasonable time in spaces with lower ceiling heights, such as 8 ft (2.4 m) to 25 ft (7.6 m). Activation of sprinklers near a fire causes smoke to cool, resulting in reduced buoyancy. This reduced buoyancy can cause smoke to descend and visibility to be reduced. Equations 6.1.2.1 and 6.1.2.2 for smoke filling and Equations 6.2.1.1b, 6.2.1.1c, 6.2.2.1, and 6.2.3.2 for smoke production do not apply if a loss of buoyancy due to sprinkler operation has occurred.

Sprinkler activation in spaces adjacent to an atrium results in cooling of the smoke. For fires with a low heat release rate, the temperature of the smoke leaving the compartment is near ambient, and the smoke will be dispersed over the height of the opening. For fires with a high heat release rate, the smoke temperature will be above ambient and the smoke entering the atrium is buoyant.

The performance objective of automatic sprinklers installed in accordance with NFPA 13, *Standard for the Installation of Sprinkler Systems*, is to provide fire control, which is defined as follows: Limiting the size of a fire by distribution of water so as to decrease the heat release rate and pre-wet adjacent combustibles, while controlling ceiling gas temperatures to avoid structural damage. A limited number of investigations have been undertaken in which full-scale fire tests were conducted in which the sprinkler system was challenged but provided the expected level of performance. These investigations indicate that, for a fire control situation, the heat release rate is limited but smoke can continue to be produced. However, the temperature of the smoke is reduced.

Full-scale sprinklered fire tests were conducted for open-plan office scenarios [52, 48]. These tests indicate that there is an exponential decay in the heat release rate for the sprinklered fires after the sprinklers are activated and achieve control. The results of these tests also indicate that a design fire with a steady-state heat release rate of 474 Btu/sec (500 kW) provides a conservative estimate for a sprinklered open-plan office.

Limited full-scale test data are available for use in determining design fire size for other sprinklered occupancies. Hansell and Morgan [25] provide conservative estimates for the convective heat release rate based on U.K. fire statistics: 1 MW for a sprinklered office, 0.5–1.0 MW for a sprinklered hotel bedroom, and 5 MW for a sprinklered retail occupancy. These steady-state design fires assume the area is fitted with standard response sprinklers.

Full-scale fire tests for retail occupancies were conducted in Australia [7]. These tests indicated that for some common retail outlets (clothing and book stores) the fire is controlled and eventually extinguished with a single sprinkler. These tests also indicated that the sprinklers might have difficulty suppressing a fire in a shop such as a toy store with a high fuel load.

Full-scale fire tests were conducted for a variety of occupancies (retail stores, cellular offices, and libraries) in the United Kingdom [33].

Full-scale fire tests were conducted for compact mobile storage systems used for document storage. Information on tests conducted in 1979 on behalf of the Library of Congress is provided in Annex C of NFPA 909, *Code for the Protection of Cultural Resources*. Subsequent full-scale fire tests conducted for the Library of Congress Archives II and the National Library of Canada showed that fires in compact mobile storage systems are difficult to extinguish [51].

During the initial active phase of the fire with the sprinklers operating, the smoke layer remains stratified under the ceiling [32]. Near the sprinklers, smoke is pulled into the cold lower layer by the water droplets and returns to the smoke layer due to buoyancy. Once the sprinklers gain control and begin to suppress the fire, the gas temperature in the smoke layer falls rapidly and the smoke is dispersed throughout the volume as buoyancy decays.

The temperature of smoke produced in a sprinklered fire depends on factors such as the heat release rate of the fire, number of sprinklers operating, and sprinkler application density. Full-scale fire tests with the water temperature at 50°F (10°C) indicate that, for four operating sprinklers, the smoke temperature is cooled to near or below ambient if the heat release rate is <190 Btu/sec (<200 kW) at an application density of 0.1 gpm/ft^2 and <474 Btu/sec (<500 kW) at an application density of 0.2 gpm/ft^2. For higher heat release rates, the smoke temperature is above ambient and is buoyant as it leaves the sprinklered area.

For low heat release rate sprinklered fires, the smoke is mixed over the height of the compartment. The smoke flow through large openings into an atrium has a constant temperature with height.

With higher heat release rates, a hot upper layer is formed. The temperature of the upper layer will be between the ambient temperature and the operating temperature of the sprinkler. If

Copyright National Fire Protection Association
Provided by IHS under license with NFPA
No reproduction or networking permitted without license from IHS
Not for Resale

the smoke is hotter than the sprinkler operating temperature, further sprinklers will be activated and the smoke will be cooled. For design purposes, a smoke temperature equivalent to the operating temperature of the sprinklers can be assumed.

A.5.2.4.4 Full-scale fire tests for open-plan offices [52, 48] have shown that, once the sprinklers gain control of the fire but are not immediately able to extinguish it due to the fuel configuration, the heat release rate decreases exponentially as follows:

$$Q(t) = Q_{act} e^{-kt} \qquad \textbf{(A.5.2.4.4)}$$

where:
$Q(t)$ = heat release rate at time t after sprinkler activation (Btu/sec)
Q_{act} = heat release rate at sprinkler activation (Btu/sec)
k = decay constant (sec^{-1})
t = time after sprinkler activation (sec)

Estimates for the decay constant for office occupancies protected with a discharge density of 0.1 gpm/ft^2 are 0.0023 for situations with light fuel loads in shielded areas [52] and 0.00155 sec^{-1} for situations with heavy loads [48].

A.5.2.5 The entire floor area covered or included between commodities should be considered in the calculations. Figure A.5.2.5(a) and Figure A.5.2.5(b) illustrate the concepts of separation distance.

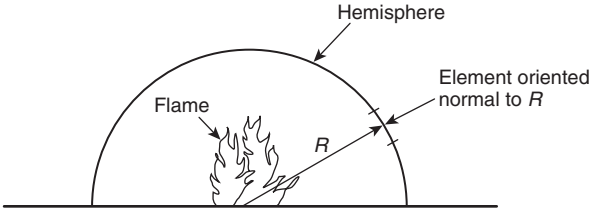

FIGURE A.5.2.5(a) Separation Distance, *R*.

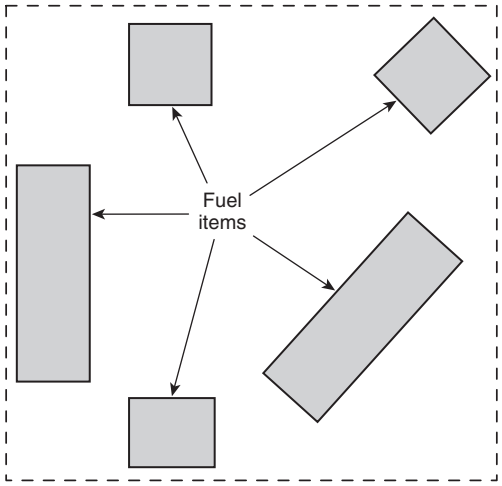

FIGURE A.5.2.5(b) Fuel Items.

A.5.4 The algebraic equations of Chapter 6 and many of the compartment fire models are only for spaces of uniform cross-sectional area. In practice, it is recognized that spaces being evaluated will not always exhibit a simple uniform geometry. The descent of the first indication of smoke in varying cross sections or complex geometric spaces can be affected by conditions such as sloped ceilings, variations in cross-sectional areas of the space, and projections into the rising plume. Methods of analysis that can be used to deal with complex and nonuniform geometries are as follows:

(1) Scale models *(see 5.1.1, Section 5.6, and A.5.6)*
(2) CFD models *(see 5.1.3 and Annex F)*
(3) Zone model adaptation *(see E.3.2)*
(4) Bounding analysis *(see E.3.3)*

A.5.6 In this standard, scale modeling pertains to the movement of hot gas through building configurations due to fire. A fire needs to be specified in terms of a steady or unsteady heat release rate.

For the zone modeling of this standard, combustion and flame radiation phenomena are ignored. Fire growth is not modeled.

A more complete review of scaling techniques and examples can be found in the referenced literature [76]. Smoke flow studies have been made by Heskestad [28] and Quintiere, McCaffrey, and Kashiwagi [77]. Analog techniques using a water and saltwater system are also available [85]. Smoke flow modeling for buildings is based on maintaining a balance between the buoyancy and convective "forces" while ignoring viscous and heat conduction effects. Neglecting these terms is not valid near solid boundaries. Some compensation can be made in the scale model by selecting different materials of construction.

Dimensionless groups can be formulated for a situation involving a heat source representing a fire along with exhaust and makeup air supply fans of a given volumetric flow rate. The solution of the gas temperature *(T)*, velocity *(v)*, pressure *(p)*, and surface temperature $(T)_s$ expressed in dimensionless terms and as a function of *x*, *y*, *z*, and time *(t)* are as follows:

$$\left\{ \begin{array}{c} \dfrac{T}{T_o} \\ \dfrac{v}{\sqrt{gl}} \\ \dfrac{\rho}{\rho_o gl} \\ \dfrac{T_s}{T_o} \end{array} \right\} = f\left(\frac{x}{l}, \frac{y}{l}, \frac{z}{\sqrt{l/g}}, \pi_1, \pi_2, \pi_3 \right) \qquad \textbf{(A.5.6)}$$

where:
T_o = ambient temperature
g = gravitational acceleration
l = characteristic length
ρ_o = ambient density

π_1, π_2, and π_3 are dimensionless groups arising from the energy release of the fire, fan flows, and wall heat transfer as follows:

$$\pi_1 = \frac{Q}{\rho_o c_o \sqrt{gl}^{5/2}} \sim \frac{\text{fire energy}}{\text{flow energy}} \qquad \textbf{(A.5.6a)}$$

where:
Q = energy release rate of the fire
c_o = specific heat of the ambient air

Copyright National Fire Protection Association
Provided by IHS under license with NFPA
No reproduction or networking permitted without license from IHS
Not for Resale

$$\pi_2 = \frac{V_{fan}}{\sqrt{g}l^{5/2}} \sim \frac{\text{fan flow}}{\text{buoyant flow}} \quad \textbf{(A.5.6b)}$$

where:
V_{fan} = volumetric flow rate of the exhaust fan

$$\pi_3 = \frac{1}{(k\rho c)_w}\left(\frac{\rho_o}{\mu}\right)^{1.6} g^{0.3}k^2 l^{0.9} \sim \frac{\text{convection heat transfer}}{\text{wall heat transfer}} \quad \textbf{(A.5.6c)}$$

where:
$(k\rho c)_w$ = thermal properties (conductivity, density, and specific heat) of the wall
μ = gas viscosity
k = gas thermal conductivity

The expression of π_3 is applicable to a thermally thick construction material. Additionally dimensionless (πs) are needed if wall thickness and radiation effects are significant. π_3 attempts to correct for heat loss at the boundary by permitting a different construction material in the scale model in order to maintain a balance for the heat losses.

The scaling expression for the fire heat release rate follows from preserving π_1. Similarly, expressions for the volumetric exhaust rate and wall thermal properties are obtained from preserving π_2 and π_3.

The wall properties condition is easily met by selecting a construction material that is noncombustible and approximately matches $(k\rho c)_w$ with a material of sufficient thickness to maintain the thermally thick condition. The thermal properties of enclosure can be scaled as follows:

$$(k\rho c)_{w,m} = (k\rho c)_{m,F}\left(\frac{l_m}{l_F}\right)^{0.9} \quad \textbf{(A.5.6d)}$$

where:
$(k\rho c)_{w,m}$ = thermal properties of the wall of the model
$(k\rho c)_{w,F}$ = thermal properties of the wall of the full-scale facility
c = specific heat of enclosure materials (wall, ceiling)
k = thermal conductivity of enclosure materials (wall, ceiling)
ρ = density of enclosure materials (wall, ceiling)

The following examples are included to provide insight into the way that the Froude modeling scaling relations are used.

Example 1. What scale model should be used for a mall where the smallest area of interest at 3 m is the floor-to-ceiling height on the balconies?

Note that it is essential that the flow in the model is fully developed turbulent flow, and to achieve this it is suggested that areas of interest in the scale model be at least 0.3 m. The corresponding floor-to-ceiling height of the model should be at least 0.3 m. Set $l_m = 0.3$ m, and $l_F = 3$ m, then $l_m/l_F = 0.1$.

Example 2. The design fire for a specific facility is a constant fire of 5000 kW. What size fire will be needed for a one-tenth scale model?

$$\frac{l_m}{l_F} = 0.1 \quad \textbf{(A.5.6e)}$$

$$Q_m = Q_F\left(\frac{l_m}{l_F}\right)^{5/2} = 5000(0.1)^{5/2} = 15.8 \text{ kW}$$

Example 3. For a full-scale facility with a smoke exhaust rate of 250 m^3/sec, what is the smoke exhaust rate for a one-tenth scale model?

$$V_{fan,m} = V_{fan,F}\left(\frac{l_m}{l_F}\right)^{5/2} = 250(0.1)^{5/2} = 7.9 \text{ m}^3/\text{sec} \quad \textbf{(A.5.6f)}$$

Example 4. The walls of a full-scale facility are made of concrete. What is the impact of constructing the walls of a one-tenth scale model of gypsum board?

The $k\rho c$ of brick is 1.7 $kW^2/m^{-4}\cdot K^{-2}\cdot s$.

The ideal thermal properties of the model can be calculated as follows:

$$(k\rho c)_{w,m} = (k\rho c)_{w,F}\left(\frac{l_m}{l_F}\right)^{0.9} = (1.7)(0.1)^{0.9} = 0.21\left(\text{kW}^2/\text{m}^{-4}\cdot\text{sec}\right) \quad \textbf{(A.5.6g)}$$

The value for gypsum board is 0.18 $kW^2/m^{-4}\cdot K^{-2}\cdot s$, which is close to the ideal value above, so that the gypsum board is a good match. It should be noted that using glass windows for video and photographs would be more important than scaling of thermal properties.

Example 5. In a one-tenth scale model, the following clear heights were observed: 2.5 m at 26 seconds, 1.5 m at 85 seconds, and 1.0 m at 152 seconds. What are the corresponding clear heights for the full-scale facility?

For the first clear height and time pair of $z_m = 2.5$ m at $t_m =$ 26 seconds:

$$z_F = z_m\left(\frac{l_F}{l_m}\right) = 2.5(10/1) = 25 \text{ m} \quad \textbf{(A.5.6h)}$$

and

$$t_F = t_m\left(\frac{l_F}{l_m}\right)^{1/2} = 26(10/1)^{1/2} = 82 \text{ sec} \quad \textbf{(A.5.6i)}$$

The other clear height and time pairs are calculated in the same manner, and they are all listed in Table A.5.6(a) and Table A.5.6(b).

Table A.5.6(a) Scale Model Observation

Clear Height (m)	Time (sec)
2.5	26
1.5	85
1.0	152

Table A.5.6(b) Full-Scale Facility Prediction

Clear Height (m)	Time (sec)
25	82
15	269
10	480

Copyright National Fire Protection Association
Provided by IHS under license with NFPA
No reproduction or networking permitted without license from IHS
Not for Resale

A.6.1.1 The relations address the following three situations:

(1) No smoke exhaust is operating *(see 6.1.2.1 and 6.1.2.2)*.
(2) The mass rate of smoke exhaust equals the mass rate of smoke supplied from the plume to the smoke layer.
(3) The mass rate of smoke exhaust is less than the rate of smoke supplied from the plume to the smoke layer.

The height of the smoke layer interface can be maintained at a constant level by exhausting the same mass flow rate from the layer as is supplied by the plume. The rate of mass supplied by the plume depends on the configuration of the smoke plume. Three smoke plume configurations are addressed in this standard.

The following provides a basic description of the position of smoke layer interface with smoke exhaust operating:

(1) *Mass Rate of Smoke Exhaust Equals Mass Rate of Smoke Supplied*. After the smoke exhaust system has operated for a sufficient period of time, an equilibrium position of the smoke layer interface is achieved if the mass rate of smoke exhaust is equal to the mass rate of smoke supplied by the plume to the base of the smoke layer. Once achieved, this position should be maintained as long as the mass rates remain equal. See Section 6.2 for the mass rate of smoke supplied to the base of the smoke layer for different plume configurations.
(2) *Mass Rate of Smoke Exhaust Not Equal to Mass Rate of Smoke Supplied*. With a greater rate of mass supply than exhaust, an equilibrium position of the smoke layer interface will not be achieved. The smoke layer interface can be expected to descend, but at a slower rate than if no exhaust were provided *(see 6.1.2)*. Table A.6.1.1 includes information on the smoke layer position as a function of time for axisymmetric plumes of steady fires, given the inequality of the mass rates. For other plume configurations, a computer analysis is required.

A.6.1.2.1 Equations 6.1.2.1 and 6.1.2.1a are for use with the worst-case condition, a fire away from any walls. The equation provides a conservative estimate of hazard because z relates to the height where there is a first indication of smoke, rather than the smoke layer interface position. Calculation results yielding $z/H > 1.0$ indicate that the smoke layer has not yet begun to descend.

Equations 6.1.2.1 and 6.1.2.1a are based on limited experimental data [35, 71, 66, 14, 24] from investigations using:

(1) Uniform cross-sectional areas with respect to height
(2) A/H^2 ratios ranging from 0.9 to 14
(3) $z/H \geq 0.2$

A.6.1.2.2 See Annex I for additional information on unsteady fire.

A.6.2.1.1 The mass rate of smoke production is calculated based on the rate of entrained air, because the mass rate of combustion products generated from the fire is generally much less than the rate of air entrained in the plume.

Several entrainment relations for axisymmetric fire plumes have been proposed. Those recommended herein were those first derived in conjunction with the 1982 edition of NFPA 204, *Standard for Smoke and Heat Venting*. These relations were later slightly modified by the incorporation of a virtual origin and were also compared against other entrainment relations. For more information about fire plumes, see Heskestad [30] and Beyler [8].

The entrainment relations for axisymmetric fire plumes in NFPA 92B are essentially those presented in NFPA 204, *Standard for Smoke and Heat Venting*. Effects of virtual origin are ignored, because they would generally be small in the present application.

The base of the fire has to be the lowest point of the fuel array. The mass flow rate in the plume depends on whether locations above or below the mean flame height are considered (i.e., whether the flames are below the smoke layer interface or reach into the smoke layer).

The rate of mass supplied by the plume to the smoke layer is obtained from Equation 6.2.1.1c for clear heights less than the flame height *(see Equation 6.2.1.1a and otherwise from Equation 6.2.1.1b)*. The clear height is selected as the design height of the smoke layer interface above the fire source.

It should be noted that Equations 6.2.1.1b and 6.2.1.1c do not explicitly address the types of materials involved in the fire, other than through the rate of heat release. This is due to the mass rate of air entrained being much greater than the mass rate of combustion products generated and to the amount of air entrained only being a function of the strength (that is, rate of heat release of the fire).

Table A.6.1.1 Increase in Time for Smoke Layer Interface to Reach Selected Position for Axisymmetric Plumes

		t/t_o					
z/H	m/m_e =	**0.25**	**0.35**	**0.5**	**0.7**	**0.85**	**0.95**
0.2		1.12	1.19	1.3	1.55	1.89	2.49
0.3		1.14	1.21	1.35	1.63	2.05	2.78
0.4		1.16	1.24	1.4	1.72	2.24	3.15
0.5		1.17	1.28	1.45	1.84	2.48	3.57
0.6		1.20	1.32	1.52	2.00	2.78	4.11
0.7		1.23	1.36	1.61	2.20	3.17	4.98
0.8		1.26	1.41	1.71	2.46	3.71	6.25

where:
t = time for smoke layer interface to descend to z
t_o = value of t in absence of smoke exhaust *(see Equation 6.1.2.1)*
z = design height of smoke layer interface above base of the fire
H = ceiling height above fire source
m = mass flow rate of smoke exhaust (minus any mass flow rate into smoke layer from sources other than the plume)
m_e = value of m required to maintain smoke layer interface indefinitely at z *(see Equation 6.2.1.1b)*

Copyright National Fire Protection Association
Provided by IHS under license with NFPA
No reproduction or networking permitted without license from IHS
Not for Resale

Fires can be located near the edge or a corner of the open space. In this case, entrainment might not be from all sides of the plume, resulting in a lesser smoke production rate than where entrainment can occur from all sides. Thus, conservative design calculations should be conducted based on the assumption that entrainment occurs from all sides.

Physical model tests [49, 50] with steady-state fires have shown that Equation 6.2.1.1b provides a good estimate of the plume mass flow rate for an atrium smoke management system operating under equilibrium conditions *(see 6.2.1.1)*. The results also showed that the smoke layer was well mixed. The average temperature in the smoke layer can be approximated using the adiabatic estimate for the plume temperature at the height of the smoke layer interface *(see Equation 6.2.5)*.

At equilibrium, the height z in Equation 6.2.1.1b is the location of the smoke layer interface above the base of fuel *(see Figure A.3.3.8)*. For an efficient smoke management system, the depth of the transition zone is approximately 10 percent of the atrium height. In the transition zone, the temperature and other smoke parameters decrease linearly with height between the smoke layer interface height and the lower edge of the transition zone.

Plume contact with the walls can be of concern for cases where the plume diameter increases *(see 6.2.4)* to contact multiple walls of the atrium below the intended design smoke layer interface. The effective smoke layer interface will occur at or below the height where the plume is in contact with all of the walls.

In situations where the flame height as calculated from Equation 6.2.1.1a is greater than 50 percent of the ceiling height or in a condition of dispersed fuel packages *(see 5.2.5)* that can be burning simultaneously, the application of the virtual origin concept can make a difference in the mass flow calculation. Equations that include the virtual origin and revised flame height calculation can be found in NFPA 204, *Standard for Smoke and Heat Venting*, 9.2.3, Mass Flow Rate in Plume.

A.6.2.2.1 Equation 6.2.2.1 is based on Law's interpretation [46] of small-scale experiments by Morgan and Marshall [60]. Scenarios with balcony spill plumes involve smoke rising above a fire, reaching a ceiling, balcony, or other significant horizontal projection, then traveling horizontally toward the edge of the "balcony." Characteristics of the resulting balcony spill plume depend on characteristics of the fire, width of the spill plume, and height of the ceiling above the fire. In addition, the path of horizontal travel from the plume centerline to the balcony edge is significant.

Agreement of the predictions from Equation 6.2.2.1 with those from small-scale experimental efforts is presented in Figure A.6.2.2.1. Whereas the agreement is quite good, the results are only from two small-scale experimental programs.

When z_b is approximately 13 times the width, the balcony spill plume is expected to have the same production rate as an axisymmetric plume; consequently, for $z_b > 13W$, the smoke production rate from a balcony spill plume should be estimated using Equation 6.2.1.1b.

A.6.2.2.3 Visual observations of the width of the balcony spill plume at the balcony edge were made in a set of small-scale experiments by Morgan and Marshall [60] and analyzed by Law [46]. In these experiments, the fire was in a communicating space, immediately adjacent to the atrium. An equivalent width can be defined by equating the entrainment from an unconfined balcony spill plume to that from a confined balcony spill plume.

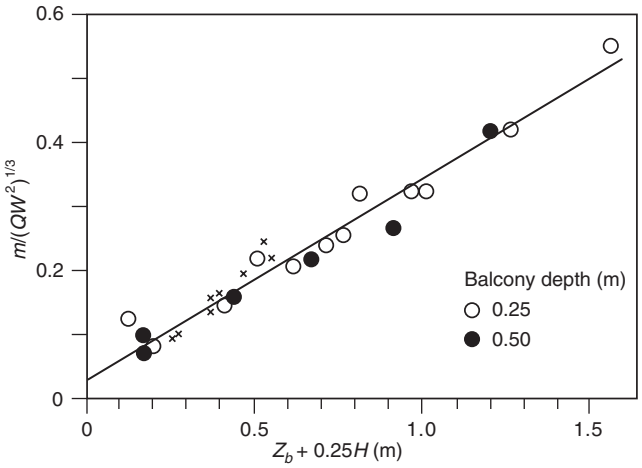

FIGURE A.6.2.2.1 Agreement Between Predictions and Experimental Values [60, 64].

A.6.2.3 Window plumes are not expected for sprinkler-controlled fires.

A.6.2.3.1 Equation 6.2.3.1 is appropriate when the heat release is limited by the air supply to the compartment, the fuel generation is limited by the air supply, and excess fuel burns outside the compartment using air entrained outside the compartment. The methods in this section are also valid only for compartments having a single ventilation opening.

Equation 6.2.3.1 is for a ventilation controlled fire where the heat release rate can be related to the characteristics of the ventilation opening. This equation is based on experimental data for wood and polyurethane, by Modak and Alpert [56] and Tewarson [86].

A.6.2.3.2 The air entrained into the window plume can be determined by analogy with the axisymmetric plume. This is accomplished by determining the entrainment rate at the tip of the flames issuing from the window and determining the height in an axisymmetric plume that would yield the same amount of entrainment. The mass entrainment for window plumes is given as follows:

$$m = \left[0.022 Q_c^{1/3} \left(z_w + a\right)^{5/3}\right] + 0.0042 Q_c$$

Substituting Equation 6.2.3.1 into this mass flow rate, and using $Q_c = 0.7Q$, results in Equation 6.2.3.2.

The virtual source height is determined as the height of a fire source in the open that gives the same entrainments as the window plume at the window plume flame tip. Further entrainment above the flame tip is assumed to be the same as for a fire in the open. Although this development is a reasonably formulated model for window plume entrainment, no data are available to validate its use. As such, the accuracy of the model is unknown.

A.6.2.4 As a plume rises, it entrains air and widens. The required values of K_d will result in conservative calculations.

A.6.2.5 Equations 6.2.5 and 6.2.5a are based on the first law of thermodynamics. The mass flow rate of the plume can be calculated from Equation 6.2.1.1b, 6.2.1.1c, 6.2.2.1, or 6.2.3.2. The equations for the mass flow rate of plumes (Equations 6.2.1.1b, 6.2.1.1c, 6.2.2.1, and 6.2.3.2) were developed for

Copyright National Fire Protection Association
Provided by IHS under license with NFPA
No reproduction or networking permitted without license from IHS
Not for Resale

strongly buoyant plumes; for small temperature differences between the plume and ambient, errors due to low buoyancy could be significant. This topic needs further study; in the absence of better data, it is recommended that the plume equations not be used when this temperature difference is small [<4°F (<2.2°C)].

The temperature from Equation 6.2.5 is a mass flow average, but the temperature varies over the plume cross-section. The plume temperature is greatest at the centerline of the plume; the centerline temperature is of interest when atria are tested by real fires.

The plume's centerline temperature should not be confused with the average plume temperature. The centerline temperature of an axisymmetric plume should be determined using Equation A.6.2.5 as follows:

$$T_{cp} = T_o + 9.1\left(\frac{T_o}{gC_p^2\rho_o^2}\right)^{1/3}\frac{Q^{2/3}}{z^{5/3}} \qquad \textbf{(A.6.2.5)}$$

where:

For English units,

T_{cp} = absolute centerline plume temperature of an axisymmetric plume at elevation z (R)

T_o = absolute ambient temperature (R)

g = acceleration of gravity (32.2 ft/sec^2)

C_p = specific heat of air (0.24 Btu/lb-R)

ρ_o = density of ambient air (lb/ft^3)

Q = heat release rate of the fire (Btu/sec)

z = height above base of fuel (ft)

where:

For metric units,

T_{cp} = absolute centerline plume temperature of an axisymmetric plume at elevation z (K)

T_o = absolute ambient temperature (K)

g = acceleration of gravity (9.81 m/sec^2)

C_p = specific heat of air (1.0 kJ/kg-K)

ρ_o = density of ambient air (kg/m^3)

Q = heat release rate of the fire (kW)

z = height above base of fuel (m)

A.6.3 The sizing and spacing of exhaust fan intakes should balance the following concerns:

(1) The exhaust intakes need to be sufficiently close to one another to prevent the smoke from cooling to the point that it loses buoyancy as it travels along the underside of the ceiling to an intake and descends from the ceiling. This is particularly important for spaces where the length is greater than the height, such as shopping malls.
(2) The exhaust intakes need to be sized and distributed in the space to minimize the likelihood of air beneath the smoke layer from being drawn through the layer. This phenomenon is called plugholing.

The objective of distributing fan inlets is therefore to establish a gentle and generally uniform rate over the entire smoke layer. To accomplish this, the velocity of the exhaust inlet should not exceed the value determined from Equation 6.3.1.

For plugholing calculations, the smoke temperature should be calculated as

$$T = T_o + \frac{KQ_c}{mC_p}$$

where:

T_s = smoke layer temperature (°F)
T_o = ambient temperature (°F)
K = fraction of convective energy contained in the smoke layer gases
Q_c = convective portion of heat release (Btu/sec)
m = mass flow rate of the plume (lb/sec)
C_p = specific heat of plume gases (0.24 Btu/lb-°F)

A value of $K = 0.5$ is suggested unless more detailed information is available.

A.6.3.3 The plugholing equation of this paragraph is consistent with and derived from the scale model studies of Spratt and Heselden [83]. The equation is also consistent with the recent study of Nii, Nitta, Harada, and Yamaguchi [70A].

A.6.3.4 The γ factor of 1.0 applies to ceiling vents remote from a wall. Remote is regarded as a separation greater than two times the depth of the smoke layer below the lower point of the exhaust opening.

A.6.3.5 The γ factor of 0.5 is based upon potential flow considerations for a ceiling vent adjacent to a wall. While γ should vary smoothly from 0.5 for a vent directly adjacent to a wall to 1.0 for a ceiling vent remote from a wall, the available data does not support this level of detail in the requirements of the standard.

A.6.3.6 The γ factor of 0.5 is used for all wall vents. Because no data exists for wall exhausts, a value of γ greater than 0.5 could not be justified.

A.6.3.7 Noise due to exhaust fan operation or due to velocity at the exhaust inlet should be limited to allow the fire alarm signal to be heard.

A.6.4 For a smoke management system designed to operate under equilibrium conditions *(see A.6.2.1.1)*, the smoke exhaust system should be designed to provide sufficient volumetric exhaust capacity at the temperature of the smoke layer.

Equation 6.4 is provided for those situations where it is desired to express the smoke production rate in terms of a volumetric rate rather than mass flow rate.

For smoke management purposes, the density of smoke can be considered the same as the density of air. The density of air or smoke is as follows:

$$\rho = \frac{144\,p_{atm}}{R(T+460)} \qquad \textbf{(A.6.4)}$$

where:

ρ = density of smoke at temperature (lb/ft^3)
p_{atm} = atmospheric pressure (lb/in.^{2})
R = gas constant (53.34)
T = temperature of smoke (°F)

In SI units, density of air or smoke is as follows:

$$\rho = \frac{p_{atm}}{RT} \qquad \textbf{(A.6.4a)}$$

where:

ρ = density of smoke at temperature (kg/m^3)
p_{atm} = atmospheric pressure (Pa)
R = gas constant (287)
T = absolute temperature of smoke (K)

Copyright National Fire Protection Association
Provided by IHS under license with NFPA
No reproduction or networking permitted without license from IHS
Not for Resale

Designers should use the atmospheric pressure for a specific location. Standard atmospheric pressure is 14.696 lb/ft^3 (101,325 Pa).

A.7.2 Exhaust fans should be operated prior to the operation of the makeup air supply. The simplest method of introducing makeup air into the space is through direct openings to the outside such as through doors and louvers, which can be opened upon system activation. Such openings can be coordinated with the architectural design and be located as required below the design smoke layer. For locations where such openings are impractical, a mechanical supply system can be considered. This system could possibly be an adaptation of the building's HVAC system if capacities, outlet grille locations, and velocities are suitable. For those locations where climates are such that the damage to the space or contents could be extensive during testing or frequent inadvertent operation of the system, consideration should be given to heating the makeup air.

A.7.3 Related systems can include fire protection signaling systems, sprinkler systems, and HVAC systems, among others. Simplicity should be the goal of each smoke management control system. Complex systems should be avoided. Such systems tend to confuse, might not be installed correctly, might not be properly tested, might have a low level of reliability, and might never be maintained.

A.7.3.6 Verification devices can include the following:

(1) End-to-end verification of the wiring, equipment, and devices in a manner that includes provision for positive confirmation of activation, periodic testing, and manual override operation
(2) Presence of operating power downstream of all circuit disconnects
(3) Positive confirmation of fan activation by means of duct pressure, airflow, or equivalent sensors that respond to loss of operating power; problems in the power or control circuit wiring; airflow restrictions; and failure of the belt, shaft coupling, or motor itself
(4) Positive confirmation of damper operation by contact, proximity, or equivalent sensors that respond to loss of operating power or compressed air; problems in the power, control circuit, or pneumatic lines; and failure of the damper actuator, linkage, or damper itself
(5) Other devices or means as appropriate

Items A.7.3.6(1) through A.7.3.6(4) describe multiple methods that can be used, either singly or in combination, to verify that all portions of the controls and equipment are operational. For example, conventional (electrical) supervision can be used to verify the integrity of the conductors from a fire alarm system control unit to the control system input (*see NFPA 72, National Fire Alarm Code*), and end-to-end verification can be used to verify operation from the control system input to the desired end result. If different systems are used to verify different portions of the control circuit, controlled equipment, or both, then each system would be responsible for indicating off-normal conditions on its respective segment.

End-to-end verification, as described in 3.3.6, monitors both the electrical and mechanical components of a smoke control system. End-to-end verification provides positive confirmation that the desired result has been achieved during the time that a controlled device is activated. The intent of end-to-end verification goes beyond determining whether a circuit fault exists, but instead ascertains whether the desired end result (i.e., airflow or damper position) is achieved. True end-to-end verification, therefore, requires a comparison of the desired operation to the actual end result.

An "open" in a control wire, failure of a fan belt, disconnection of a shaft coupling, blockage of an air filter, failure of a motor, or other abnormal condition that could prevent proper operation is not expected to result in an off-normal indication when the controlled device is not activated, since the measured result at that time matches the expected result. If a condition that prevents proper operation persists during the next attempted activation of the device, an off-normal indication should be provided.

A.7.3.7 Such controls should be able to override any interlocking features built into the automatically operated system. *(See NFPA 92A, Recommended Practice for Smoke-Control Systems, for devices that should not be overridden.)*

A.7.4 Standby power should be considered for smoke-control systems and their control systems. Normal electrical power serving air-conditioning systems generally has sufficient reliability for nondedicated zoned smoke-control systems.

A.8.1.1 It is recommended that the building owner, designer, and authority having jurisdiction meet during the planning stage of the project to share their thoughts and objectives concerning the smoke management system contemplated and agree on the design criteria and the pass/fail performance tests for the systems. Such an agreement helps to overcome the numerous problems that occur during final acceptance testing and facilitates obtaining the certificate of occupancy.

A.8.2.1 The intent of component system testing is to establish that the final installation complies with the specified design, is functioning properly, and is ready for acceptance testing.

A.8.2.3 Operational testing of system components should be completed during construction. These operational tests will normally be performed by various trades before interconnection is made to integrate the overall smoke management system. It should be documented in writing that each individual system component's installation is complete and the component is functional. Each component test, including items such as speed, volume, sensitivity calibration, voltage, and amperage, should be individually documented.

A.8.2.4 Systems that could affect or be affected by the operation of the smoke management system include the following:

(1) Fire alarm system *(see NFPA 72, National Fire Alarm Code)*
(2) Energy management system
(3) Building management system
(4) Heating, ventilating, and air-conditioning (HVAC) equipment
(5) Electrical equipment
(6) Temperature control system
(7) Power sources
(8) Standby power
(9) Automatic suppression systems
(10) Automatic operating doors and closures
(11) Other smoke-control systems
(12) Emergency elevator operation
(13) Dampers

A.8.3.1 Representatives of one or more of the following should be present during acceptance testing to grant acceptance:

(1) Authority having jurisdiction
(2) Owner
(3) Designer

Copyright National Fire Protection Association
Provided by IHS under license with NFPA
No reproduction or networking permitted without license from IHS
Not for Resale

The following equipment might be needed to perform acceptance testing:

(1) Differential pressure gauges, inclined water manometers, or electronic manometer [instrument ranges 0–0.25 in. w.g. (0–62.5 Pa) and 0–0.50 in. w.g. (0–125 Pa) with a sufficient length of tubing] including traversing equipment
(2) Scale suitable for measuring door-opening force
(3) Anemometer
(4) Ammeter and voltmeter
(5) Door wedges
(6) Tissue paper roll or other convenient device for indicating direction of airflow
(7) Signs indicating that a test of the smoke management system is in progress and that doors should not be opened
(8) Several walkie-talkie radios (They have been found to be useful to help coordinate equipment operation and data recording.)

Other Test Methods. Much can be accomplished to demonstrate smoke management system operation without resorting to demonstrations that use smoke or products that simulate smoke.

The test methods previously described should provide an adequate means to evaluate the smoke management system's performance. Other test methods have been used historically in instances where the authority having jurisdiction requires additional testing. These test methods have limited value in evaluating certain system performance, and their validity as a method of testing a smoke management system is questionable.

As covered in the preceding chapters, the dynamics of the fire plume, buoyancy forces, and stratification are all major critical elements in the design of the smoke management system. Therefore, to test the system properly, a real fire condition would be the most appropriate and meaningful test. However, there are many valid reasons why such a fire is usually not practical in a completed building. Open flame/actual fire testing might be dangerous and should not normally be attempted. Any other test is a compromise. If a test of the smoke management system for building acceptance is mandated by the authority having jurisdiction, such a test condition would become the basis of design and might not in any way simulate any real fire condition. More importantly, it could be a deception and provide a false sense of security that the smoke management system would perform adequately in a real fire emergency.

Smoke bomb tests do not provide the heat, buoyancy, and entrainment of a real fire and are not useful in evaluating the real performance of the system. A system designed in accordance with this document and capable of providing the intended smoke management might not pass smoke bomb tests. Conversely, it is possible for a system that is incapable of providing the intended smoke management to pass smoke bomb tests. Because of the impracticality of conducting real fire tests, the acceptance tests described in this document are directed to those aspects of smoke management systems that can be verified.

It is an understatement to say that acceptance testing involving a real fire has obvious danger to life and property because of the heat generated and the toxicity of the smoke.

A.8.3.4.1 Building mechanical equipment that is not typically used to implement smoke management includes but is not limited to toilet exhaust, elevator shaft vents, elevator machine room fans, and elevator and kitchen hoods.

A.8.3.4.2 Disconnect the normal building power at the main service disconnect to simulate true operating conditions in standby power mode.

A.8.3.4.5 One or more device circuits on the fire protective signaling system can initiate a single input signal to the smoke management system.

Therefore, consideration should be given to establishing the appropriate number of initiating devices and initiating device circuits to be operated to demonstrate the smoke management system operation.

A.8.3.5 The large-volume space can come in many configurations, each with its own peculiarities. They can be tall and thin or short and wide; have balconies and interconnecting floors; be open or closed to adjacent floors; have corridors and stairs for use in evacuation or have only exposed walls and windows (sterile tube); and be a portion of a hotel, hospital, shopping center, or arena. Specific smoke management criteria have to be developed for each unique situation.

A.8.4.1 During the life of the building, maintenance is essential to ensure that the smoke management system will perform its intended function under fire conditions.

A.8.4.2 See NFPA 90A, *Standard for the Installation of Air-Conditioning and Ventilating Systems*, for suggested maintenance practices.

A.8.4.6 Since smoke management systems can override limit controls such as freezestats, tests should be conducted when outside air conditions will not cause damage to equipment and systems.

A.9.1 Design documentation is critical to the proper installation, operation, and maintenance of the smoke and heat vent systems. It forms the basis for evaluating the system's adequacy to perform as intended if the building or its use is modified.

It is often advantageous to develop a design brief and conceptual design report as follows:

Design Brief. The design brief should contain a statement of the goals and objectives of the smoke management system and provide the design assumptions to be used in the conceptual design.

The design brief should include at least the following:

(1) System performance goals, design objectives, and design approach
(2) Performance criteria (including design tenability criteria where applicable)
(3) Building characteristics (height, area, layout, use, ambient conditions, and other fire protection systems)
(4) Design basis fire(s)
(5) Design fire location(s)
(6) Identified design constraints
(7) Proposed design approach
(8) Egress analysis, if performed
(9) Tenability analysis, if performed

The design brief should be developed in the first stage of the design process to assure that all stakeholders understand and agree to the goals, objectives, design fire, and design approach so that the conceptual design can be developed on an agreed upon basis. Stakeholders should include at least the building owner, the authorities having jurisdiction, and the design team.

Copyright National Fire Protection Association
Provided by IHS under license with NFPA
No reproduction or networking permitted without license from IHS
Not for Resale

Conceptual Design Report. The conceptual design report should provide the details of the conceptual design based upon the design brief. It should document the design calculations.

The conceptual design should include at least the following design elements and the technical basis for the design elements:

(1) Height, cross-section, and plan area of the large volume to be protected
(2) Smoke management method *(see Chapter 4)* and design interval time (if applicable)
(3) Detection method, detector characteristics, spacing, and smoke extract system actuation means (and supporting detection and smoke-filling calculations)
(4) Smoke extraction locations and sizes, exhaust flow rates (and supporting calculations for layer interface location and avoidance of plugholing)
(5) Inlet vent area(s), location(s), and operation method (and supporting calculations for inlet flow rate and flow velocity)
(6) Equipment and controls description and operation
(7) Egress analysis, if performed
(8) Fire size and expected fuel packages
(9) If the building is protected with an automatic sprinkler system

The conceptual design report has to include all design calculations performed to establish the design elements, all design assumptions, and all building use limitations that arise out of the system design.

Annex B Predicting the Rate of Heat Release of Fires

This annex is not a part of the requirements of this NFPA document but is included for informational purposes only.

B.1 Introduction. The following presents techniques for estimating the heat release rate of various fuel arrays likely to be present in buildings where smoke venting is a potential fire safety provision. The annex primarily addresses the estimation of fuel concentrations found in retail, stadia, office, and similar locations that might involve large areas addressed by this standard. Conversely, NFPA 204, *Standard for Smoke and Heat Venting*, addresses the types of fuel arrays more common to storage and manufacturing locations and other types of building situations covered by that standard. NFPA 92B is applicable to situations where the hot layer does not enhance the burning rate. The methods provided in this annex for estimating the rate of heat release, therefore, are based on "free burning" conditions where no ceiling or hot gas layer effects are involved. And it is, therefore, assumed that the burning rate is relatively unaffected by the hot layer.

A limited amount of heat release rate data for some fuel commodities has been reported [6, 5, 44]. However, furniture construction details and materials are known to substantially influence the peak heat release rate, such that heat release rate data are not available for all furniture items or for "generic" furniture items.

B.2 Sources of Data. The following sources of data appear in their approximate order of priority, given equal quality of data acquisition:

(1) Actual tests of the array involved
(2) Actual tests of similar arrays
(3) Algorithms derived from tests of arrays having similar fuels and dimensional characteristics
(4) Calculations based on tested properties and materials and expected flame flux
(5) Mathematical models of fire spread and development

B.3 Actual Tests of the Array Involved. Where an actual calorific test of the specific array under consideration has been conducted and the data are in a form that can be expressed as rate of heat release, the data can then be used as input for the methods in this standard. Since actual test data seldom produce the steady state assumed for a limited-growth fire or the square of time growth assumed for a continuous-growth (t-squared) fire, engineering judgment is usually needed to derive the actual input necessary if either of these approaches is used. *(See Annex C for further details relevant to t-squared fires.)* If a computer model that is able to respond to a rate of heat release versus time curve is used, the data can be used directly. Currently there is no established catalog of tests of specific arrays. Some test data can be found in technical reports. Alternatively, individual tests can be conducted.

Many fire tests do not include a direct measurement of rate of heat release. In some cases, it can be derived based on measurement of mass loss rate using the following equation:

$$Q = \dot{m} h_c \qquad \textbf{(B.3a)}$$

where:
Q = rate of heat release (kW)
$\dot{m}$ = mass loss rate (kg/sec)
h_c = heat of combustion (kJ/kg)

In other cases, the rate of heat release can be derived based on measurement of flame height as follows:

$$Q = 37\left(L + 1.02D\right)^{5/2} \qquad \textbf{(B.3b)}$$

where:
Q = rate of heat release (kW)
L = flame height (m)
D = fire diameter (m)

B.4 Actual Tests of Arrays Similar to that Involved. Where an actual calorific test of the specific array under consideration cannot be found, it can be possible to find data on one or more tests that are similar to the fuel of concern in important matters such as type of fuel, arrangement, or ignition scenario. The more the actual tests are similar to the fuel of concern, the higher the confidence that can be placed in the derived rate of heat release. The addition of engineering judgment, however, might be needed to adjust the test data to that approximating the fuel of concern. If rate of heat release has not been directly measured, it can be estimated using the method described for estimating burning rate from flame height in Section B.3.

B.5 Algorithms Derived from Tests of Arrays Having Similar Fuels and Dimensional Characteristics.

B.5.1 Pool Fires. In many cases, the rate of heat release of a tested array has been divided by a common dimension, such as occupied floor area, to derive a normalized rate of heat release per unit area. The rate of heat release of pool fires is the best documented and accepted algorithm in this class.

An equation for the mass release rate from a pool fire is as follows [5]:

$$m'' = m''_o\left(1 - e^{-kBD}\right) \qquad \textbf{(B.5.1)}$$

The variables for Equation B.5.1 are as shown in Table B.5.1[5].

Copyright National Fire Protection Association
Provided by IHS under license with NFPA
No reproduction or networking permitted without license from IHS
Not for Resale

Table B.5.1 Data for Large Pool Burning Rate Estimates

Material	Density (lb/ft^3)	h_c (Btu/lb)	m''_o (lb/ft^2·s)	kB (ft^{-1})
Cryogenics[a]				
Liquid H_2	4.4	55,500	0.0035	1.9
LNG (mostly CH_4)	26	21,500	0.016	0.33
LPG (mostly C_3H_8)	37	20,000	0.02	0.43
Alcohols				
Methanol (CH_3OH)	50	8,500	0.0035	[b]
Ethanol (C_2H_5OH)	50	11,500	0.0031	[b]
Simple organic fuels				
Butane (C_4H_{10})	36	20,000	0.016	0.82
Benzene (C_5H_6)	53	17,000	0.017	0.82
Hexane (C_6H_{14})	41	19,000	0.015	0.58
Heptane (C_7H_{16})	42	19,000	0.021	0.34
Xylene (C_8H_{10})	54	17,500	0.018	0.42
Acetone (C_3H_6O)	49	11,000	0.0084	0.58
Dioxane ($C_4H_8O_2$)	65	11,000	0.0037[c]	1.6[c]
Diethyl ether ($C_4H_{10}O$)	45	14,500	0.017	0.21
Petroleum products				
Benzene	46	19,000	0.0098	1.1
Gasoline	46	19,000	0.011	0.64
Kerosene	51	18,500	0.008	1.1
JP-4	47	18,500	0.01	1.1
JP-5	51	18,500	0.011	0.49
Transformer oil, hydrocarbon	47	20,000	0.008[c]	0.21[c]
Fuel oil, heavy	59–62	17,000	0.0072	0.52
Crude oil	52–55	18,000	0.0045–0.0092	0.85
Solids				
Polymethylmethacrylate $(C_5H_8O_2)_n$	74	10,000	0.0041	1.0
Polypropylene $(C_3H_6)_n$	56	18,500	0.0037	
Polystyrene $(C_8H_8)_n$	66	17,000	0.007	

[a]For pools on dry land, not over water.
[b]Value independent of diameter in turbulent regime.
[c]Estimate uncertain, since only two data points available.

--`,,```-`-`,,`,,`,`,,`---

Copyright National Fire Protection Association
Provided by IHS under license with NFPA
No reproduction or networking permitted without license from IHS
Not for Resale

The mass rates derived from Equation B.5.1 are converted to rates of heat release using Equation B.3a and the heat of combustion from Table B.5.1. The rate of heat release per unit area times the area of the pool yields heat release data for the anticipated fire.

B.5.2 Other Normalized Data. Other data based on burning rate per unit area in tests have been developed. Table B.5.2(a) and Table B.5.2(b) list the most available of these data.

Table B.5.2(a) Unit Heat Release Rate for Commodities

Commodity	Btu/sec·ft^2 of Floor Area
Wood pallets, stacked 1½ ft high (6–12% moisture)	125
Wood pallets, stacked 5 ft high (6–12% moisture)	350
Wood pallets, stacked 10 ft high (6–12% moisture)	600
Wood pallets, stacked 16 ft high (6–12% moisture)	900
Mail bags, filled, stored 5 ft high	35
Cartons, compartmented, stacked 15 ft high	150
PE letter trays, filled, stacked 5 ft high on cart	750
PE trash barrels in cartons, stacked 15 ft high	175
PE fiberglass shower stalls in cartons, stacked 15 ft high	125
PE bottles packed in compartmented cartons	550
PE bottles in cartons, stacked 15 ft high	175
PU insulation board, rigid foam, stacked 15 ft high	170
PS jars packed in compartmented cartons	1250
PS tubs nested in cartons, stacked 14 ft high	475
PS toy parts in cartons, stacked 15 ft high	180
PS insulation board, rigid foam, stacked 14 ft high	290
PVC bottles packed in compartmented cartons	300
PP tubs packed in compartmented cartons	390
PP & PE film in rolls, stacked 14 ft high	550
Methyl alcohol	65
Gasoline	290
Kerosene	290
Diesel oil	175

PE: Polyethylene. PP: Polypropylene. PS: Polystyrene. PU: Polyurethane. PV: Polyvinyl chloride.

Note: Heat release rate per unit floor area of fully involved combustibles, based on negligible radiative feedback from the surroundings and 100 percent combustion efficiency.

Table B.5.2(b) Maximum Heat Release Rates

Warehouse Materials	Growth Time (sec)	Heat Release Density (q)	Classification
Wood pallets, stacked 1½ ft high (6–12% moisture)	150–310	110	M–F
Wood pallets, stacked 5 ft high (6–12% moisture)	90–190	330	F
Wood pallets, stacked 10 ft high (6–12% moisture)	80–110	600	F
Wood pallets, stacked 16 ft high (6–12% moisture)	75–105	900	F
Mail bags, filled, stored 5 ft high	190	35	F
Cartons, compartmented, stacked 15 ft high	60	200	*
Paper, vertical rolls, stacked 20 ft high	15–28	—	*
Cotton (also PE, PE/Cot, Acrylic/Nylon/PE), garments in 12 ft high rack	20–42	—	*
Cartons on pallets, rack storage, 15–30 ft high	40–280	—	M–F
Paper products, densely packed in cartons, rack storage, 20 ft high	470	—	M–S
PE letter trays, filled, stacked 5 ft high on cart	190	750	F
PE trash barrels in cartons stacked 15 ft high	55	250	*
FRP shower stalls in cartons, stacked 15 ft high	85	110	*
PE bottles packed in compartmented cartons	85	550	*
PE bottles in cartons, stacked 15 ft high	75	170	*
PE pallets, stacked 3 ft high	130	—	F
PE pallets, stacked 6–8 ft high	30–55	—	*
PU mattress, single, horizontal	110	—	F
PF insulation, board, rigid foam, stacked 15 ft high	8	170	*
PS jars packed in compartmented cartons	55	1200	*
PS tubs nested in cartons, stacked 14 ft high	105	450	F
PS toy parts in cartons, stacked 15 ft high	110	180	F
PS insulation board, rigid, stacked 14 ft high	7	290	*
PVC bottles packed in compartmented cartons	9	300	*
PP tubs packed in compartmented cartons	10	390	*
PP and PE film in rolls, stacked 14 ft high	40	350	*
Distilled spirits in barrels, stacked 20 ft high	23–40	—	*
Methyl alcohol	—	65	—

Copyright National Fire Protection Association
Provided by IHS under license with NFPA
No reproduction or networking permitted without license from IHS
Not for Resale

Table B.5.2(b) *Continued*

Warehouse Materials	Growth Time (sec)	Heat Release Density (q)	Classification
Gasoline	—	200	—
Kerosene	—	200	—
Diesel oil	—	180	—

For SI units, 1 ft = 0.305 m.

S: Slow. M: Medium. F: Fast.

PE: Polyethylene. PS: Polystyrene. PVC: Polyvinyl chloride. PP: Polypropylene. PU: Polyurethane. FRP: Fiberglass-reinforced polyester.

Notes:

(1) $Qm = qA$

where:

Qm = maximum heat release rate (Btu/sec)

q = heat release density (Btu/sec·ft^2)

A = floor area (ft^2)

(2) The heat release rates per unit floor area are for fully involved combustibles, assuming 100 percent efficiency. The growth times shown are those required to exceed 1000 Btu/sec heat release rate for developing fires assuming 100 percent combustion efficiency.

*Fire growth rate exceeds classification criteria.

B.5.3 Other Useful Data. Other data that are not normalized might be useful in developing the rate of heat release curve. Examples are included in Table B.5.3(a) through Table B.5.3(h).

Table B.5.3(a) Maximum Heat Release Rates from Fire Detection Institute Analysis

Commodity	Approximate Values (Btu/sec)
Medium wastebasket with milk cartons	100
Large barrel with milk cartons	140
Upholstered chair with polyurethane foam	350
Latex foam mattress (heat at room door)	1200
Furnished living room (heat at open door)	4000–8000

Table B.5.3(b) Characteristics of Ignition Sources [6]

Ignition Source	Typical Heat Output (W)	Burn Time[a] (sec)	Maximum Flame Height (mm)	Flame Width (mm)	Maximum Heat Flux (kW/m^2)
Cigarette 1.1 g (not puffed, laid on solid surface), bone dry					
Conditioned to 50%	5	1,200	—	—	42
Relative humidity	5	1,200	—	—	35
Methenamine pill, 0.15 g	45	90	—	—	4
Match, wooden (laid on solid surface)	80	20–30	30	14	18–20
Wood cribs, BS 5852 Part 2					
No. 4 crib, 8.5 g	1,000	190			15[d]
No. 5 crib, 17 g	1,900	200			17[d]
No. 6 crib, 60 g	2,600	190			20[d]
No. 7 crib, 126 g	6,400	350			25[d]
Crumpled brown lunch bag, 6 g	1,200	80			
Crumpled wax paper, 4.5 g (tight)	1,800	25			
Crumpled wax paper, 4.5 g (loose)	5,300	20			
Folded double-sheet newspaper, 22 g (bottom ignition)	4,000	100			
Crumpled double-sheet newspaper, 22 g (top ignition)	7,400	40			
Crumpled double-sheet newspaper, 22 g (bottom ignition)	17,000	20			
Polyethylene wastebasket, 285 g, filled with 12 milk cartons (390 g)	50,000	200[b]	550	200	35[c]
Plastic trash bags, filled with cellulosic trash (1.2–14 kg)[e]	120,000–350,000	200[b]			

For SI units, 1 in. = 25.4 mm; 1 Btu/sec = 1.055 W; 1 oz = 0.02835 kg = 28.35 g; 1 Btu/ft^2-sec = 11.35 kW/m^2.

[a]Time duration of significant flaming.

[b]Total burn time in excess of 1800 seconds.

[c]As measured on simulation burner.

[d]Measured from 25 mm away.

[e]Results vary greatly with packing density.

Copyright National Fire Protection Association
Provided by IHS under license with NFPA
No reproduction or networking permitted without license from IHS
Not for Resale

Table B.5.3(c) Characteristics of Typical Furnishings as Ignition Sources [6]

	Total Mass (kg)	Total Heat Content (mJ)	Maximum Rate of Heat Release (kW)	Maximum Thermal Radiation to Center of Floor* (kW/m^2)
Waste paper baskets	0.73–1.04	0.7–7.3	4–18	0.1
Curtains, velvet, cotton	1.9	24	160–240	1.3–3.4
Curtains, acrylic/ cotton	1.4	15–16	130–150	0.9–1.2
TV sets	27–33	145–150	120–290	0.3–2.6
Chair mockup	1.36	21–22	63–66	0.4–0.5
Sofa mockup	2.8	42	130	0.9
Arm chair	26	18	160	1.2
Christmas trees, dry	6.5–7.4	11–41	500–650	3.4–14

For SI units, 1 lb = 0.4536 kg = 453.6 g; 1 Btu = 1.055×10^{-3} mJ; 1 Btu/sec = 1.055 kW; 1 Btu/ft^2-sec = 11.35 kW/m^2.

*Measured at approximately 2 m away from the burning object.

B.6 Calculated Fire Description Based on Tested Properties.

B.6.1 Background. It is possible to make general estimates of the rate of heat release of burning materials based on the fire properties of that material. The fire properties involved can be determined by small-scale tests. The most important of these tests are calorimeter tests involving both oxygen depletion calorimetry and the application of external heat flux to the sample while determining time to ignition, rate of mass release, and rate of heat release for the specific applied flux. Most prominent of the current test apparatus are the cone calorimeter *(see ASTM E 1354, Standard Test Method for Heat and Visible Smoke Release Rates for Materials and Products Using an Oxygen Consumption Calorimeter)* and the Factory Mutual calorimeter [86]. In addition to these directly measured properties, it is possible to derive ignition temperature, critical ignition flux, effective thermal inertia ($k\rho c$), heat of combustion, and heat of gasification based on results from these calorimeters. Properties not derivable from these calorimeters and essential to determining flame spread in directions not concurrent with the flow of the flame can be obtained from the LIFT (lateral ignition and flame travel) apparatus *(see ASTM E 1321, Standard Test Method for Determining Material Ignition and Flame Spread Properties)*. This section presents a concept of the use of fire property test data as the basis of an analytical evaluation of the rate of heat release involved in the use of a tested material. The approach outlined in this section is based on that presented by Nelson and Forssell [68].

B.6.2 Discussion of Measured Properties. Table B.6.2(a) lists the type of fire properties obtainable from the cone or Factory Mutual calorimeters and similar instruments.

In Table B.6.2(a), the rate of heat release (RHR), mass loss, and time to ignition are functions of the externally applied incident radiant heat flux imposed on the tested sample. The purpose of the externally applied flux is to simulate the fire environment surrounding a burning item. In general, it can be estimated that a free-burning fuel package (i.e., one that burns in the open and is not affected by energy feedback from a hot gas layer of a heat source other than its own flame) is impacted by a flux in the range of 25 kW/m^2 to 50 kW/m^2. If the fire is in a space and conditions are approaching flashover, this can increase to the range of 50 kW/m^2 to 75 kW/m^2. In fully developed, post-flashover fires, a range of 75 kW/m^2 to over 100 kW/m^2 can be expected. The following is a discussion of the individual properties measured or derived and the usual form used to report the property.

Rate of Heat Release. Rate of heat release is determined by oxygen depletion calorimetry. Each test is run at a user-specific incident flux and either for a predetermined period of time or until the sample is consumed. The complete results are presented in the form of a plot of rate of heat release against time, with the level of applied flux noted. In some cases, the rate of heat release for several tests of the same material at different levels of applied flux is plotted on a single curve for comparison. Figure B.6.2 is an example of such a plotting.

Often only the peak rate of heat release at a specific flux is reported. Table B.6.2(b) is an example.

Mass Loss Rate (m). Mass loss rate is determined by a load cell. The method of reporting is identical to that for rate of heat release. In the typical situation where the material has a consistent heat of combustion, the curves for mass loss rate and rate of heat release are similar in shape.

Time to Ignition (q_i). Time to ignition is reported for each individual test and applied flux level conducted.

Effective Thermal Inertia (kDc). Effective thermal inertia is a measurement of the heat rise response of the tested material to the heat flux imposed on the sample. It is derived at the time of ignition and is based on the ratio of the actual incident flux to the critical ignition flux and the time to ignition. A series of tests at different levels of applied flux is necessary to derive the effective thermal inertia. Effective thermal inertia derived in this manner can differ from and be preferable to that derived using handbook data for the values of k, D, and c derived without a fire.

Heat of Combustion (H_c). Heat of combustion is derived by dividing the measured rate of heat release by the measured mass loss rate. It is normally reported as a single value, unless the sample is a composite material and the rates of heat release and mass loss vary significantly with time and exposure.

Heat of Gasification (h_g). Heat of gasification is the flux needed to pyrolyze a unit mass of fuel. It is derived as a heat balance and is usually reported as a single value in terms of the amount of energy per unit mass of material released (e.g., kJ/g).

Critical Ignition Flux (q_{cr}). Critical ignition flux is the minimum level of incident flux on the sample needed to ignite the sample, given an unlimited time of application. At incident flux levels less than the critical ignition flux, ignition does not take place.

Ignition Temperature (T_i). Ignition temperature is the surface temperature of a sample at which flame occurs. This is a sample material value that is independent of the incident flux. It is derivable from the calorimeter tests, the LIFT apparatus test, and other tests. It is derived from the time to ignite in a given test, the applied flux in that test, and the effective thermal inertia of the sample. It is reported at a single temperature. If the test includes a pilot flame or spark, the reported temperature is for piloted ignition; if there is no pilot present, the temperature is for autoignition. Most available data are for piloted ignition.

--`,,,```-`-`,,`,,`,`,,`---
Copyright National Fire Protection Association
Provided by IHS under license with NFPA
No reproduction or networking permitted without license from IHS
Not for Resale

Table B.5.3(d) Heat Release Rates of Chairs [6]

Specimen	kg	Mass Combustible (kg)	Style	Frame	Padding	Fabric	Interliner	Peak m (g/sec)	Peak q (kW)
C12	17.9	17.0	Traditional easy chair	Wood	Cotton	Nylon	—	19.0	290[a]
F22	31.9		Traditional easy chair	Wood	Cotton (FR)	Cotton	—	25.0	370
F23	31.2		Traditional easy chair	Wood	Cotton (FR)	Olefin	—	42.0	700
F27	29.0		Traditional easy chair	Wood	Mixed	Cotton	—	58.0	920
F28	29.2		Traditional easy chair	Wood	Mixed	Cotton	—	42.0	730
CO2	13.1	12.2	Traditional easy chair	Wood	Cotton, PU	Olefin	—	13.2	800[b]
CO3	13.6	12.7	Traditional easy chair	Wood	Cotton, PU	Cotton	—	17.5	460[a]
CO1	12.6	11.7	Traditional easy chair	Wood	Cotton, PU	Cotton	—	17.5	260[a]
CO4	12.2	11.3	Traditional easy chair	Wood	PU	Nylon	—	75.7	1350[b]
C16	19.1	18.2	Traditional easy chair	Wood	PU	Nylon	Neoprene	NA	180
F25	27.8		Traditional easy chair	Wood	PU	Olefin	—	80.0	1990
T66	23.0		Traditional easy chair	Wood	PU, polyester	Cotton	—	27.7	640
F21	28.3		Traditional easy chair	Wood	PU (FR)	Olefin	—	83.0	1970
F24	28.3		Traditional easy chair	Wood	PU (FR)	Cotton	—	46.0	700
C13	19.1	18.2	Traditional easy chair	Wood	PU	Nylon	Neoprene	15.0	230[a]
C14	21.8	20.9	Traditional easy chair	Wood	PU	Olefin	Neoprene	13.7	220[a]
C15	21.8	20.9	Traditional easy chair	Wood	PU	Olefin	Neoprene	13.1	210[b]
T49	15.7		Easy chair	Wood	PU	Cotton	—	14.3	210
F26	19.2		Thinner easy chair	Wood	PU (FR)	Olefin	—	61.0	810
F33	39.2		Traditional loveseat	Wood	Mixed	Cotton	—	75.0	940
F31	40.0		Traditional loveseat	Wood	PU (FR)	Olefin	—	130.0	2890
F32	51.5		Traditional sofa	Wood	PU (FR)	Olefin	—	145.0	3120
T57	54.6		Loveseat	Wood	PU, cotton	PVC	—	61.9	1100
T56	11.2		Office chair	Wood	Latex	PVC	—	3.1	80
CO9/T64	16.6	16.2	Foam block chair	Wood (part)	PU, polyester	PU	—	19.9	460
CO7/T48	11.4	11.2	Modern easy chair	PS foam	PU	PU	—	38.0	960
C10	12.1	8.6	Pedestal chair	Rigid PU foam	PU	PU	—	15.2	240[a]
C11	14.3	14.3	Foam block chair	—	PU	Nylon	—	NA	810[b]
F29	14.0		Traditional easy chair	PP foam	PU	Olefin	—	72.0	1950
F30	25.2		Traditional easy chair	Rigid PU foam	PU	Olefin	—	41.0	1060
CO8	16.3	15.4	Pedestal swivel chair	Molded PE	PU	PVC	—	112.0	830[b]
CO5	7.3	7.3	Bean bag chair	—	Polystyrene	PVC	—	22.2	370[a]
CO6	20.4	20.4	Frameless foam back chair	—	PU	Acrylic	—	151.0	2480[b]
T50	16.5		Waiting room chair	Metal	Cotton	PVC	—	NA	<10
T53	15.5	1.9	Waiting room chair	Metal	PU	PVC	—	13.1	270
T54	27.3	5.8	Metal frame loveseat	Metal	PU	PVC	—	19.9	370
T75/F20	7.5(×4)	2.6	Stacking chairs (4)	Metal	PU	PVC	—	7.2	160

For SI units, 1 lb/sec = 0.4536 kg/sec = 453.6 g/sec; 1 lb = 0.4536 kg; 1 Btu/sec = 1.055 kW.
[a]Estimated from mass loss records and assumed Wh_c.
[b]Estimated from doorway gas concentrations.

Copyright National Fire Protection Association
Provided by IHS under license with NFPA
No reproduction or networking permitted without license from IHS
Not for Resale

Table B.5.3(e) Effect of Fabric Type on Heat Release Rate in Table B.5.3(a) (Within each group all other construction features were kept constant.) [6]

Specimen	Full-Scale Peak q (kW)	Padding	Fabric
	Group 1		
F24	700	Cotton (750 g/m^2)	FR PU foam
F21	1970	Polyolefin (560 g/m^2)	FR PU foam
	Group 2		
F22	370	Cotton (750 g/m^2)	Cotton batting
F23	700	Polyolefin (560 g/m^2)	Cotton batting
	Group 3		
28	760	None	FR PU foam
17	530	Cotton (650 g/m^2)	FR PU foam
21	900	Cotton (110 g/m^2)	FR PU foam
14	1020	Polyolefin (650 g/m^2)	FR PU foam
7, 19	1340	Polyolefin (360 g/m^2)	FR PU foam

For SI units, 1 lb/ft^2 = 48.83 g/m^2; 1 oz/ft^2 = 305 g/m^2; 1 Btu/sec = 1.055 kW.

Table B.5.3(f) Effect of Padding Type on Maximum Heat Release Rate in Table B.5.3(d) (Within each group all other construction features were kept constant.) [6]

Specimen	Full-Scale Peak q (kW)	Padding	Fabric
	Group 1		
F21	1970	FR PU foam	Polyolefin (560 g/m^2)
F23	1990	NFR PU foam	Polyolefin (560 g/m^2)
	Group 2		
F21	1970	FR PU foam	Polyolefin (560 g/m^2)
F23	700	Cotton batting	Polyolefin (560 g/m^2)
	Group 3		
F24	700	FR PU foam	Cotton (750 g/m^2)
F22	370	Cotton batting	Cotton (750 g/m^2)
	Group 4		
12, 27	1460	NFR PU foam	Polyolefin (360 g/m^2)
7, 19	1340	FR PU foam	Polyolefin (360 g/m^2)
15	120	Neoprene foam	Polyolefin (360 g/m^2)
	Group 5		
20	430	NFR PU foam	Cotton (650 g/m^2)
17	530	FR PU foam	Cotton (650 g/m^2)
22	0	Neoprene foam	Cotton (650 g/m^2)

For SI units, 1 lb/ft^2 = 48.83 g/m^2; 1 oz/ft^2 = 305 g/m^2; 1 Btu/sec = 1.055 kW.

Table B.5.3(g) Effect of Frame Material for Specimens with NFR PU Padding and Polyolefin Fabrics [6]

Specimen	Mass (kg)	Peak q (kW)	Frame
F25	27.8	1990	Wood
F30	25.2	1060	Polyurethane
F29	14.0	1950	Polypropylene

For SI units, 1 lb = 0.4536 kg; 1 Btu/sec = 1.055 kW.

Table B.5.3(h) Considerations for Selecting Heat Release Rates for Design

Constant Heat Release Rate Fires		
Theobald (industrial)	260 kW/m^2	(approx. 26 Btu/sec-ft^2)
Law [46] (offices)	290 kW/m^2	(approx. 29 Btu/sec-ft^2)
Hansell & Morgan [7] (hotel rooms)	249 kW/m^2	(approx. 25 Btu/sec-ft^2)
Variable Heat Release Rate Fires		
NBSIR 88-3695 Fuel Configuration	**Fire Growth Rate**	
Computer workstation		
Free burn	Slow–fast	
Compartment	Very slow	
Shelf storage		
Free burn	Medium up to 200 sec, fast after 200 sec	
Office module	Very slow–medium	
NISTIR 483 Fuel Commodity	**Peak Heat Release Rate (kW)**	
Computer workstation	1000–1300	
NBS Monograph 173 Fuel Commodity	**Peak Heat Release (kW)**	
Chairs	80–2480 (<10, metal frame)	
Loveseats	940–2890 (370, metal frame)	
Sofa	3120	

Table B.6.2(a) Relation of Calorimeter-Measured Properties to Fire Analysis

Property	Ignition	Flame Spread	Fire Size (Energy)
Rate of heat release*		X	X
Mass loss*			X
Time to ignition*	X	X	
Effective thermal properties†	X	X	
Heat of combustion†		X	X
Heat of gasification†			X
Critical ignition flux†	X	X	
Ignition temp.†	X	X	

* Property is a function of the externally applied incident flux.
†Derived properties from calorimeter measurements.

Copyright National Fire Protection Association
Provided by IHS under license with NFPA
No reproduction or networking permitted without license from IHS
Not for Resale

Table B.6.2(b) Average Maximum Heat Release Rates (kW/m^2)

Material	Orientation	2.2 Btu/sec/ft^2 Exposing Flux	4.4 Btu/sec/ft^2 Exposing Flux	6.6 Btu/sec/ft^2 Exposing Flux
PMMA	Horizontal	57	79	114
	Vertical	49	63	114
Pine	Horizontal	12	21	23
	Vertical	11	15	56
Sample A	Horizontal	11	18	22
	Vertical	8	11	19
Sample B	Horizontal	12	15	21
	Vertical	5.3	18	29
Sample C	Horizontal		19	22
	Vertical		15	15
Sample D	Horizontal	6.2	13	13
	Vertical		11	11

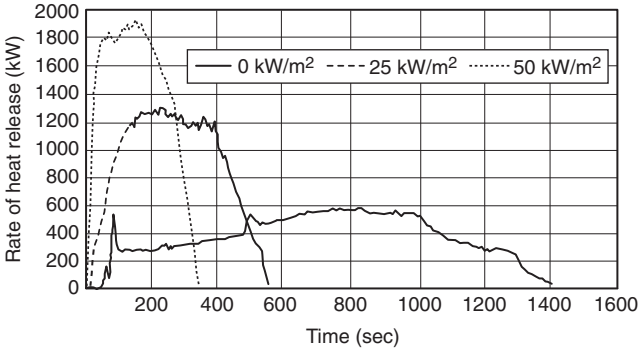

FIGURE B.6.2 Typical Graphic Output of Cone Calorimeter Test.

B.6.3 Ignition. Equations for time to ignition, t_{ig}, are given for both thermally thin and thermally thick materials, as defined in B.6.3.1 and B.6.3.2. For materials of intermediate depth, estimates for t_{ig} necessitate considerations beyond the scope of this presentation [40, 77].

B.6.3.1 Thermally Thin Materials. Relative to ignition from a constant incident heat flux, q_i, at the exposed surface and with relatively small heat transfer losses at the unexposed surface, a thermally thin material is a material whose temperature is relatively uniform throughout its entire thickness, l, at $t = t_{ig}$. For example, at $t = t_{ig}$,

$$T_{exposed} - T_{unexposed} = T_{ig} - T_{unexposed} < 0.1\left(T_{ig} - T_o\right) \quad \textbf{(B.6.3.1a)}$$

Equation B.6.3.1a can be used to show that a material is thermally thin [77] if

$$1 < 0.6\left(t_{ig}''\right)^{1/2} \quad \textbf{(B.6.3.1b)}$$

For example, for sheets of maple or oak wood (where the thermal diffusivity = 1.28×10^{-7} m^2/sec [78]), if t_{ig} = 35 seconds is measured in a piloted ignition test, then, according to Equation B.6.3.1b, if the sample thickness is less than approximately 0.0013 m, the unexposed surface of the sample can be expected to be relatively close to T_{ig} at the time of ignition, and the sample is considered to be thermally thin.

The time to ignition of a thermally thin material subjected to incident flux above a critical incident flux is as follows:

$$t_{ig} = \rho c l \frac{\left(T_{ig} - T_o\right)}{\dot{q}_i''} \quad \textbf{(B.6.3.1c)}$$

B.6.3.2 Thermally Thick Materials. Relative to the type of ignition test described in B.6.3.1, a sample of a material of a thickness, l, is considered to be thermally thick if the increase in temperature of the unexposed surface is relatively small compared to that of the exposed surface at $t = t_{ig}$. For example, at $t = t_{ig}$,

$$T_{unexposed}BT_o < 0.1\left(T_{exposed}BT_o\right) = 0.1\left(T_{ig}BT_o\right) \quad \textbf{(B.6.3.2a)}$$

Equation B.6.3.2a can be used to show that a material is thermally thick [11] if

$$l > 2\left(t_{ig}10\right)^{1/2} \quad \textbf{(B.6.3.2b)}$$

For example, according to Equation B.6.3.2b, in the case of an ignition test on a sheet of maple or oak wood, if t_{ig} = 35 seconds is measured in a piloted ignition test, then, if the sample thickness is greater than approximately 0.0042 m, the unexposed surface of the sample can be expected to be relatively close to T_o at $t = t_{ig}$ and the sample is considered to be thermally thick.

Time to ignition of a thermally thick material subjected to incident flux above a critical incident flux is as follows:

$$t_{ig} = \left(\frac{B}{4}\right) k\rho c \left(\frac{T_{ig}BT_o}{q_i''}\right)^2 \quad \textbf{(B.6.3.2c)}$$

It should be noted that a particular material is not intrinsically thermally thin or thick (i.e., the characteristic of being thermally thin or thick is not a material characteristic or property) but also depends on the thickness of the particular sample (i.e., a particular material can be implemented in either a thermally thick or thermally thin configuration).

B.6.3.3 Propagation Between Separate Fuel Packages. Where the concern is for propagation between individual separated fuel packages, incident flux can be calculated using traditional radiation heat transfer procedures [90].

Copyright National Fire Protection Association
Provided by IHS under license with NFPA
No reproduction or networking permitted without license from IHS
Not for Resale

The rate of radiation heat transfer from a flaming fuel package of total energy release rate, Q, to a facing surface element of an exposed fuel package can be estimated from the following:

$$q''_{inc} = \frac{X_r Q}{4\pi r^2} \qquad \textbf{(B.6.3.3)}$$

where:
q''_{inc} = incident flux on exposed fuel
X_r = radiant fraction of exposing fire
Q = rate of heat release of exposing fire
r = radial distance from center of exposing fire to exposed fuel

B.6.4 Estimating Rate of Heat Release. As discussed in B.6.2, tests have demonstrated that the energy feedback from a burning fuel package ranges from approximately 25 kW/m^2 to 50 kW/m^2. For a reasonable conservative analysis, it is recommended that test data developed with an incident flux of 50 kW/m^2 be used. For a first-order approximation, it should be assumed that all of the surfaces that can be simultaneously involved in burning are releasing energy at a rate equal to that determined by testing the material in a fire properties calorimeter with an incident flux of 50 kW/m^2 for a free-burning material and 75 kW/m^2 to 100 kW/m^2 for post-flashover conditions.

In making this estimate, it is necessary to assume that all surfaces that can "see" an exposing flame (or superheated gas, in the post-flashover condition) are burning and releasing energy and mass at the tested rate. If sufficient air is present, the rate of heat release estimate is then calculated as the product of the exposed area and the rate of heat release per unit area as determined in the test calorimeter. Where there are test data taken at the incident flux of the exposing flame, the tested rate of heat release should be used. Where the test data are for a different incident flux, the burning rate should be estimated using the heat of gasification as expressed in Equation B.6.4a to calculate the mass burning rate per unit area:

$$\dot{m}'' = \frac{\dot{q}''_i}{h_c} \qquad \textbf{(B.6.4a)}$$

The resulting mass loss rate is then multiplied by the derived effective heat of combustion and the burning area exposed to the incident flux to produce the estimated rate of heat release as follows:

$$\dot{Q}''_i = \dot{m}'' h_c A \qquad \textbf{(B.6.4b)}$$

B.6.5 Flame Spread. If it is desired to predict the growth of fire as it propagates over combustible surfaces, it is necessary to estimate flame spread. The computation of flame spread rates is an emerging technology still in an embryonic stage. Predictions should be considered as order-of-magnitude estimates.

Flame spread is the movement of the flame front across the surface of a material that is burning (or exposed to an ignition flame) where the exposed surface is not yet fully involved. Physically, flame spread can be treated as a succession of ignitions resulting from the heat energy produced by the burning portion of a material, its flame, and any other incident heat energy imposed upon the unburned surface. Other sources of incident energy include another burning object, high-temperature gases that can accumulate in the upper portion of an enclosed space, and the radiant heat sources used in a test apparatus such as the cone calorimeter or the LIFT mechanism. For analysis purposes, flame spread can be divided into two categories, that which moves in the same direction as the flame (concurrent or wind-aided flame spread) and that which moves in any other direction (lateral or opposed flame spread). Concurrent flame spread is assisted by the incident heat flux from the flame to unignited portions of the burning material. Lateral flame spread is not so assisted and tends to be much slower in progression unless an external source of heat flux is present. Concurrent flame spread can be expressed as follows:

$$V = \frac{\dot{q}''_i L}{k\rho c\left(T_{ig} - T_s\right)^2} \qquad \textbf{(B.6.5)}$$

The values for $k\rho c$ and ignition temperature are calculated from the cone calorimeter as previously discussed. For this equation, the flame length (L) is measured from the leading edge of the burning region.

Annex C *t*-squared Fires

This annex is not a part of the requirements of this NFPA document but is included for informational purposes only.

C.1 Over the past decade, persons interested in developing generic descriptions of the rate of heat release of accidental open flaming fires have used a "*t*-squared" approximation for this purpose. A *t*-squared fire is one where the burning rate varies proportionally to the square of time. Frequently, *t*-squared fires are classed by speed of growth, labeled fast, medium, and slow (and occasionally ultra-fast). Where these classes are used, they are defined on the basis of the time required for the fire to grow to a rate of heat release of 1000 Btu/sec. The times related to each of these classes are as shown in Table C.1.

Table C.1 Time for the Fire Growth Rate to Reach 1000 Btu/sec

Class	Time (sec)
Ultra-fast	75
Fast	150
Medium	300
Slow	600

The general equation is as follows:

$$q = at^2$$

where:
q = rate of heat release (normally in Btu/sec or kW)
a = constant governing the speed of growth
t = time (normally in sec)

Copyright National Fire Protection Association
Provided by IHS under license with NFPA
No reproduction or networking permitted without license from IHS
Not for Resale

C.2 Relevance of *t*-squared Approximation to Real Fires. A *t*-squared fire can be viewed as one where the rate of heat release per unit area is constant over the entire ignited surface and the fire is spreading as a circle with a steadily increasing radius. In such cases, the burning area increases as the square of the steadily increasing fire radius. Of course, other fires that do not have such a conveniently regular fuel array and consistent burning rate might or might not actually produce a *t*-squared curve. The tacit assumption is that the *t*-squared approximation is close enough for reasonable design decisions.

Figure C.2(a) is extracted from NFPA 204, *Standard for Smoke and Heat Venting*. It is presented to demonstrate that most fires have an incubation period where the fire does not conform to a *t*-squared approximation. In some cases this incubation period can be a serious detriment to the use of the *t*-squared approximation. In most instances this is not a serious concern in the atria and other large spaces covered by this standard. It is expected that the rate of heat release during the incubation period would not usually be sufficient to cause activation of the smoke detection system. In any case where such activation happens or human observation results in earlier activation of the smoke management system, a fortuitous safeguard would result.

Figure C.2(b), extracted from Nelson [67], compares rate of heat release curves developed by the aforementioned classes of *t*-squared fires and two test fires commonly used for test purposes. The test fires are shown as dashed lines labeled "furniture" and "6 ft storage." The dashed curves farther from the origin show the actual rates of heat release of the test fires used in the development of the residential sprinkler and a standard 6 ft high array of test cartons containing foam plastic pails also frequently used as a standard test fire.

The other set of dashed lines in Figure C.2(b) shows these same fire curves relocated to the origin of the graph. This is a more appropriate comparison with the generic curves. As can be seen, the rate of growth in these fires is actually faster than that prescribed for an ultra-fast fire. Such is appropriate for a test fire designed to challenge the fire suppression system being tested.

Figure C.2(c) relates the classes of *t*-squared fire growth curves to a selection of actual fuel arrays extracted from NFPA 204, *Standard for Smoke and Heat Venting*. The individual arrays are also described in Annex B.

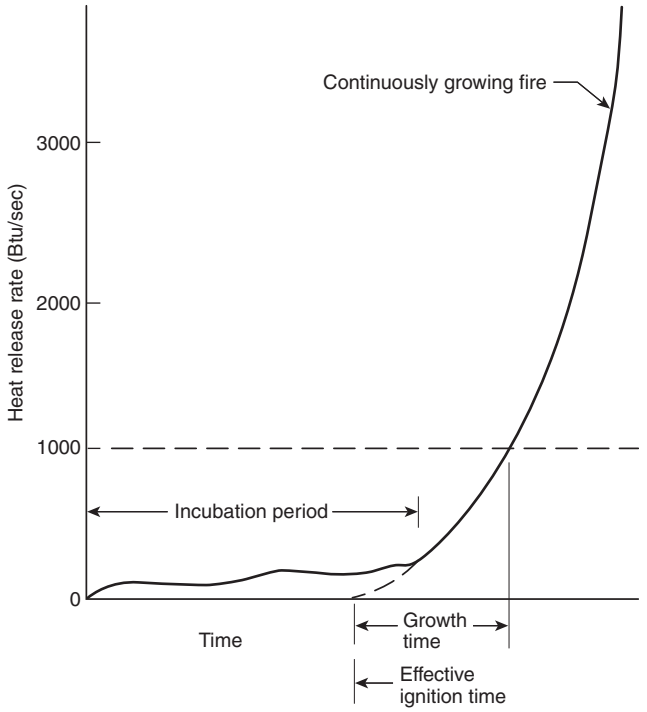

FIGURE C.2(a) Conceptual Illustration of Continuous Fire Growth.

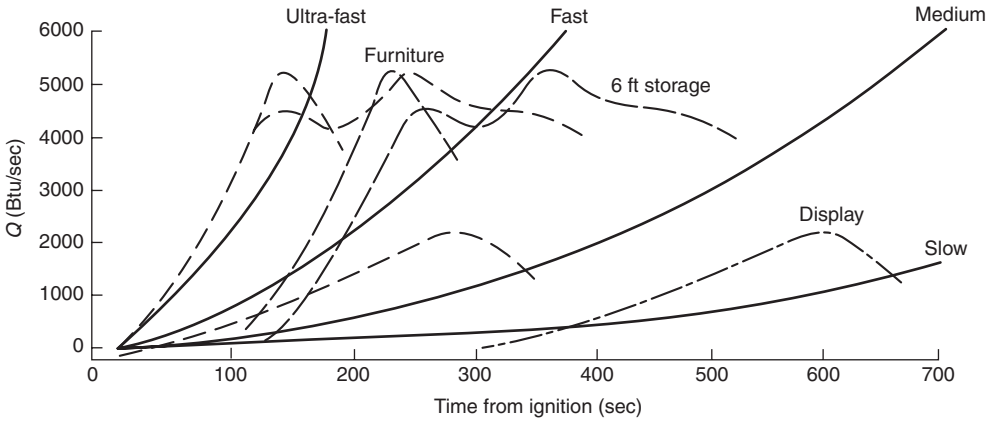

FIGURE C.2(b) Rates of Energy Release in a *t*-squared Fire.

Copyright National Fire Protection Association
Provided by IHS under license with NFPA
No reproduction or networking permitted without license from IHS
Not for Resale

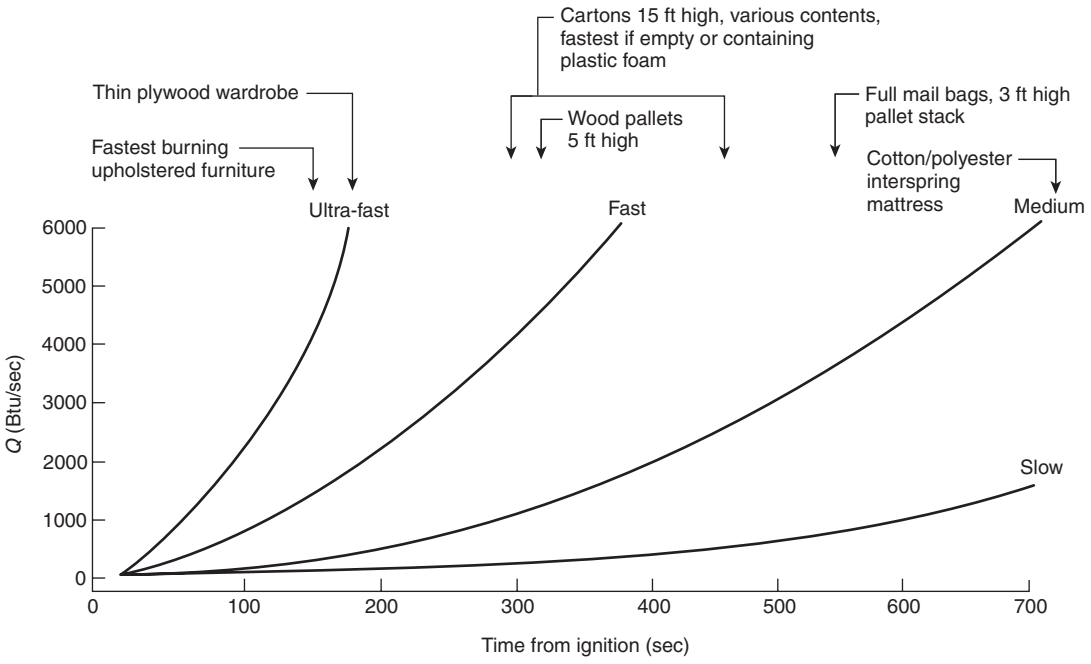

FIGURE C.2(c) Relation of *t*-squared Fire to Some Fire Tests.

Annex D Example Problems Illustrating the Use of the Equations in NFPA 92B

This annex is not a part of the requirements of this NFPA document but is included for informational purposes only.

D.1 Problem Data. Given: Atrium with uniform rectangular cross-sectional area.

Height	120 ft
Area	20,000 ft^2
A/H^2	1.4
Design fire (steady state)	5000 Btu/sec
Highest walking surface	94 ft

D.1.1 Problem 1. Determine the time when the first indication of smoke is 6 ft above the highest walking surface.

Solution:

(1) Use Equation 6.1.2.1:

$$\frac{z}{H} = 0.67 - 0.28 \ln\left(\frac{\frac{tQ^{1/3}}{H^{4/3}}}{\frac{A}{H^2}}\right) \qquad \textbf{(D.1.1a)}$$

where:

z = 100 ft
H = 120 ft
Q = 5000 Btu/sec
$Q^{1/3}$ = 17.1
$H^{4/3}$ = 591.9
A/H^2 = 1.4

$$0.83 = 0.67 - 0.28 \ln\left(\frac{\frac{17.1t}{591.9}}{1.4}\right)$$

$0.16 = -0.28 \ln (0.02t)$
$-0.57 = \ln (0.02t)$
$0.56 = 0.02t$
t = 28 seconds

(2) Use the mass flow method, based on Equation 6.2.1.1b.

Two calculation methods will be used. The first calculation will assume a smoke density of 0.075 lb/ft^3. This is equivalent to smoke at a temperature of 70°F. The second calculation assumes the layer temperature is equal to the average plume temperature at the height of the smoke layer interface. In both cases, no heat loss from the smoke layer to the atrium boundaries is assumed. A time interval of 1 second is chosen for each case.

Step 1. Calculate mass flow (lb/sec) at $z = H$, using Equation 6.2.1.1b.

Step 2. Determine temperature of the smoke layer, estimated as average smoke plume temperature at the height of the smoke layer interface:

$$T_p = T_o + \frac{Q_c}{mC_p} \qquad \textbf{(D.1.1b)}$$

where:

T_p = average plume temperature at elevation z (°F)
T_o = ambient temperature (°F)
Q_c = convective portion of heat release rate (Btu/sec)
m = mass flow rate in plume at height z (lb/sec)
C_p = specific heat of plume gases (0.24 Btu/lb-°F)

Copyright National Fire Protection Association
Provided by IHS under license with NFPA
No reproduction or networking permitted without license from IHS
Not for Resale

Step 3. Convert mass flow to volume flow, assuming smoke temperature is 70°F, as follows:

$$V = \frac{m}{\rho} \qquad \textbf{(D.1.1c)}$$

where:
V = volume flow (ft^3/min)
m = mass flow (lb/sec)
ρ = density of smoke (lb/ft^3)

Step 4. Assume that the smoke volume produced in the selected time interval is instantly and uniformly distributed over the atrium area. Determine the depth of the smoke layer, dz (ft), deposited during the selected time period.

Step 5. Calculate the new smoke layer interface height (ft).

Repeat steps (1) through (5) until the smoke layer interface reaches the design height.

Table D.1.1, showing sample values, illustrates the calculation technique.

Table D.1.1 Sample Calculated Values

Time (sec)	Mass (lb/sec)	Temperature (°F)	Volume (ft^3/sec)	z (ft)
0		70		120
1	990	84.7	13,565	119.3
2	981	84.9	13,443	118.6
3	972	85.0	13,322	118.0
4	963	85.1	13,203	117.3
5	954	85.3	13,085	116.7
6	945	85.4	12,969	116.0
7	937	85.6	12,855	115.4
8	928	85.7	12,741	114.7
9	920	85.9	12,629	114.1
10	911	86.0	12,519	113.5
11	903	86.1	12,410	112.9
12	895	86.3	12,302	112.2
13	887	86.4	12,196	111.6
14	879	86.6	12,090	111.0
15	871	86.7	11,987	110.4
16	864	86.9	11,884	109.8
17	856	87.0	11,783	109.3
18	849	87.2	11,683	108.7
19	841	87.3	11,584	108.1
20	834	87.5	11,486	107.5
21	827	87.6	11,389	106.9
22	820	87.8	11,294	106.4
23	812	87.9	11,200	105.8
24	805	88.1	11,107	105.3
25	799	88.3	11,014	104.7
26	792	88.4	10,923	104.2
27	785	88.6	10,834	103.6
28	778	88.7	10,745	103.1
29	772	88.9	10,657	102.6
30	765	89.1	10,570	102.0
31	759	89.2	10,484	101.5
32	752	89.4	10,399	101.0
33	746	89.5	10,316	100.5
34	740	89.7	10,233	100.0

D.1.2 Problem 2. Determine the volumetric exhaust rate required to keep smoke 6 ft above the highest walking level in the atrium, that is, the ninth floor balcony. Consider the fire to be located in the center of the floor of the atrium.

With the fire located in the center of the atrium, an axisymmetric plume is expected. First, Equation 6.2.1.1a must be applied to determine the flame height.

Given:

$Q_c = 3500$ Btu/sec

$z_l = 0.533 Q_c^{2/5}$

$z_l = 0.533(3500)^{2/5}$

$z_l = 13.9$ ft

With the design interface of the smoke layer at 85 ft above floor level, the flame height is less than the design smoke layer height. Thus, using Equation 6.2.1.1b to determine the smoke production rate at the height of the smoke layer interface:

$z = 100$ ft

$m = 0.022 Q_c^{1/3} z^{5/3} + 0.0042 Q_c$

$m = 0.022(3500)^{1/3} (100)^{5/3} + 0.0042(3500)$

$m = 734$ lb/sec

If the smoke exhaust rate is equal to the smoke production rate, the smoke layer depth will be stabilized at the design height. Thus, converting the mass flow rate to a volumetric flow rate as follows:

$$V = \frac{m}{\rho} \qquad \textbf{(D.1.2)}$$

where:
ρ = 0.075 lb/ft^3
V = 734/0.075
V = 9790 ft^3/sec, or 587,400 scfm

D.1.3 Problem 3. Determine whether the plume will contact all of the walls prior to reaching the design height noted in Problem 2 (6 ft above the highest walking level).

The calculation in Problem 2 assumes that the smoke plume has not widened to contact the walls of the atrium prior to reaching the design interface height. This calculation serves as a check.

Using Equation 6.2.4 with an interface height of 100 ft (z = 100 ft),

$d = 0.5z$

$d = 0.5(100)$

$d = 50$ ft

Thus, the smoke does not contact the walls of the atrium prior to reaching the design interface height.

D.1.4 Problem 4. Determine the temperature of the smoke layer after fan actuation.

The quality of the smoke contained in the smoke layer might be important in the context of tenability or damageability studies. Applying the ΔT equation for vented fires as indicated in Table G.1.3:

Given:

$Q_c = 3500$ Btu/sec

$\rho = 0.075$ lb/ft^3

$c = 0.24$ Btu/lb-°F

$V = 9790$ ft^3/sec (the value calculated in D.1.3)

$\chi_1 = 0$ (adiabatic case to obtain upper limit estimate of temperature rise)

Copyright National Fire Protection Association
Provided by IHS under license with NFPA
No reproduction or networking permitted without license from IHS
Not for Resale

Solution:

$\Delta T = Q_c / (\rho c V)$

$\Delta T = 3500 / [(0.075)(0.24)(9790)]$

$\Delta T = 20°F$

D.1.5 Problem 5. On the tenth floor, a 10 ft wide, 6 ft high opening is desired from the tenant space into the atrium. The bottom of this opening is 92 ft above the floor of the atrium.

(1) For a fire in the tenant space, determine the opposed airflow required to contain smoke in the tenant space (assume fire temperature is 1000°F).

Using Equation 5.5.1:

Given:

$H = 6$ ft

$g = 32.2$ ft/sec^2

$T_f = 1000°F$

$T_o = 70°F$

Solution:

$$v = 38\left[gH \frac{T_f - T_o}{T_f + 460} \right]^{1/2}$$

$$v = 38\left[(32.2)(6) \frac{1000 - 70}{1000 + 460} \right]^{1/2}$$

$$v = 422 \text{ ft/min}$$

(2) For a fire on the floor of the atrium, determine the opposed airflow required to restrict smoke spread into the tenant space.

Given:

$H = 6$ ft

$g = 32.2$ ft/sec^2

$Q = 5000$ Btu/sec

$T_o = 70°F$

Solution:

Determine T_f as the average plume temperature using Equation 6.2.5:

$$T_f = T_o \frac{Q_c}{mc}$$

Determine m from Equation 6.2.1.1b using $z = 95$ ft (height of middle of opening above floor level) (flame height for this case < z, see Problem 2):

$$m = 0.022 Q_c^{1/3} z^{5/3} + 0.0042 Q_c$$

$$m = 0.022(3500)^{1/3}(95)^{5/3} + 0.0042(3500)$$

$$m = 675$$

$$T_f = 70 + \frac{3500}{(675)(0.24)}$$

$$T_f = 92°F$$

Using Equation 5.5.3:

$$v = 38\left[gH \frac{T_f - T_o}{T_f + 460} \right]^{1/2}$$

$$v = 38\left[(32.2)(6) \frac{92 - 70}{92 + 460} \right]^{1/2}$$

$$v = 105 \text{ ft/min}$$

Annex E Zone Fire Models

This annex is not part of the requirements of this NFPA document but is included for informational purposes only.

E.1 Overview. Smoke produced from a fire in a large, open space is assumed to be buoyant, rising in a plume above the fire and striking the ceiling or stratifying due to temperature inversion. After the smoke either strikes the ceiling or stratifies, the space can be expected to begin to fill with smoke, with the smoke layer interface descending. The descent rate of the smoke layer interface depends on the rate at which smoke is supplied to the smoke layer from the plume. Such smoke filling is represented by a two-zone model in which there is a distinct interface between the bottom of the smoke layer and the ambient air. For engineering purposes, the smoke supply rate from the plume can be estimated to be the air entrainment rate into the plume below the smoke layer interface. Sprinklers can reduce the heat release rate and the air entrainment rate into the plume.

As a result of the zone model approach, the model assumes uniform properties (smoke concentration and temperature) from the point of interface through the ceiling and horizontally throughout the entire smoke layer.

For general information about fire plumes and ceiling jets, see Beyler [8].

E.2 Simplifications of Zone Fire Models. Zone models are the simpler models and can usually be run on personal computers. Zone models divide the space into two zones, an upper zone that contains the smoke and hot gases produced by the fire and a lower zone, which is the source of entrainment air. The sizes of the two zones vary during the course of a fire, depending on the rate of flow from the lower to the upper zone, the rate of exhaust of the upper zone, and the temperature of the smoke and gases in the upper zone. Because of the small number of zones, zone models use engineering equations for heat and mass transfer to evaluate the transfer of mass and energy from the lower to the upper zone, the heat and mass losses from the upper zone, and other features. Generally, the equations assume that conditions are uniform in each respective zone.

In zone models, the source of the flow into the upper zone is the fire plume. All zone models have a plume equation. A few models allow the user to select among several plume equations. Most current zone models are based on an axisymmetric plume.

Because present zone models assume that there is no preexisting temperature variation in the space, they cannot directly handle stratification. Zone models also assume that the ceiling smoke layer forms instantly and evenly from wall to wall. This fails to account for the initial lateral flow of smoke across the ceiling. The resulting error can be significant in spaces having large ceiling areas.

Zone models can, however, calculate many important factors in the course of events (for example, smoke level, temperature, composition, and rate of descent) from any fire that the user can describe. Most zone models will calculate the extent of heat loss to the space boundaries. Several models calculate the impact of vents or mechanical exhaust, and some predict the response of heat- or smoke-actuated detection systems.

Common simplifications of zone models are listed as follows:

(1) Fuel:

(a) Heat release rate isn't accelerated by heat feedback from smoke layer.

Copyright National Fire Protection Association
Provided by IHS under license with NFPA
No reproduction or networking permitted without license from IHS
Not for Resale

(b) Post-flashover heat release rate is weakly understood, and its unique simulation is attempted by only a few models.
(c) CO production is simulated, but its mechanism is not fully understood through the flashover transition.
(d) Some models do not consider burning of excess pyrolyzate on exit from a vent.

(2) Plumes:
(a) Plume mass entrainment is ±20 percent and not well verified in tall compartments.
(b) There is no transport time from the fire elevation to the position of interest in the plume and ceiling jet.
(c) Spill plume models are not well developed.
(d) Not all plume models consider the fuel area geometry.
(e) Entrainment along stairwells is not simulated.
(f) Entrainment from horizontal vents is not simulated by all models.

(3) Layers:
(a) Hot stagnation layers at the ceiling are not simulated.
(b) There is uniformity in temperature.

(4) Heat transfer:
(a) Some models do not distinguish between thermally thin and thermally thick walls.
(b) There is no heat transfer via barriers from room to room.
(c) Momentum effects are neglected.

(5) Ventilation: Mixing at vents is correlationally determined.

E.3 Nonuniform Spaces.

E.3.1 Sensitivity Analysis. In the absence of an analysis using scale models, field models, or zone model adaptation, a sensitivity analysis should be considered. A sensitivity analysis can provide important information to assist in engineering judgments regarding the use of Equations 6.1.2.1 and 6.1.2.2 for complex and nonuniform geometries. An example of a sensitivity analysis is illustrated as follows for a large space having a nonflat ceiling geometry.

The first step of the analysis would be to convert a nonuniform geometry to a similar or volume-equivalent uniform geometry.

In the case of the geometry shown in Figure E.3.1(a), this would be done as follows:

(1) Convert the actual nonrectangular vertical cross-section area to a rectangular vertical cross-section of equal area.
(2) The height dimension corresponding to the equivalent rectangular cross-section would then be used as a substitute height factor H_{sub} in Equation 6.1.2.2.

Results of Equation 6.1.2.2 should be compared with other minimum and maximum conditions as indicated by Figure E.3.1(b).

An appropriate method of comparison could be a graph of Equation 6.1.2.2 as shown in Figure E.3.1(c). Assume that the building in question can be evacuated in 3 minutes and that the design criteria require the smoke layer to remain available 10 ft above the floor at this time. A review of the curves would indicate that the smoke layer heights as calculated for the substitute case are appropriate. This conclusion can be drawn by noting that neither the extreme minimum height case (H = 30 ft, W = 60 ft) nor the maximum height case (H = 60 ft) offers an expected answer, but the results for two cases (H = 41.6, W = 60; and H = 30, W = 83.3) can be judged to reasonably approximate the behavior of the nonuniform space. It might otherwise be unreasonable to expect the behavior indicated by the maximum or minimum cases.

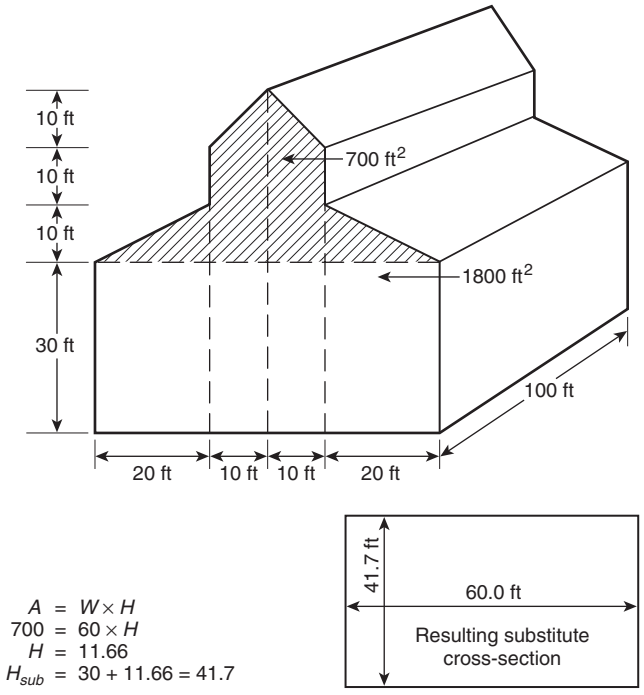

FIGURE E.3.1(a) Large Space with Nonflat Ceiling.

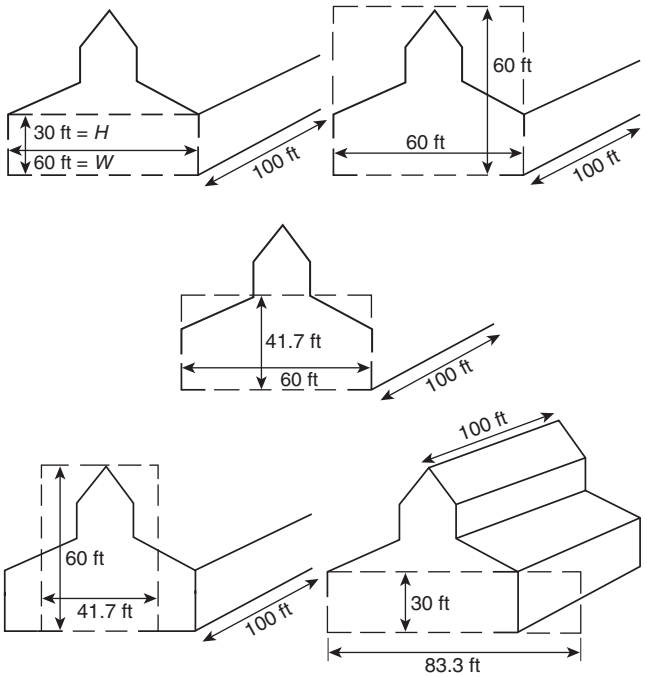

FIGURE E.3.1(b) Other Nonuniform Geometry Considerations.

Copyright National Fire Protection Association
Provided by IHS under license with NFPA
No reproduction or networking permitted without license from IHS
Not for Resale

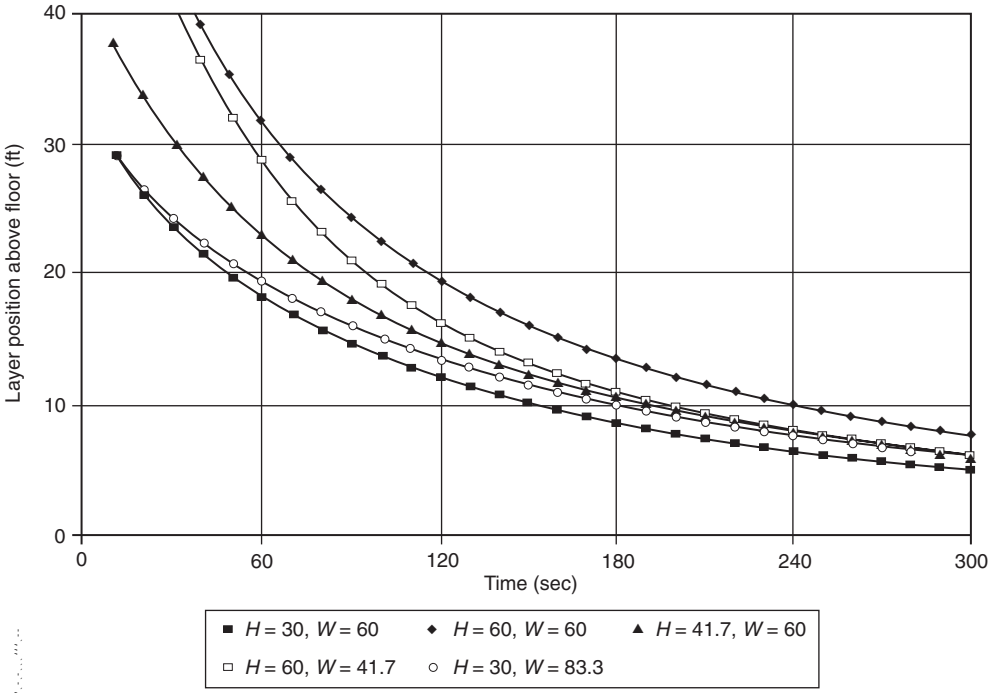

FIGURE E.3.1(c) Comparison Data for Guidance on Nonrectangular Geometries — Growing Fire.

E.3.2 Zone Model Adaptation. A zone model predicated on smoke filling a uniform cross-sectional geometry is modified to recognize the changing cross-sectional areas of a space. The entrainment source can be modified to account for expected increases or decreases in entrainment due to geometric considerations, such as projections.

E.3.3 Bounding Analysis. An irregular space is evaluated using Equations 6.1.2.1 and 6.1.2.2 at and between the limits of a maximum height and minimum height identifiable from the geometry of the space using equivalent height or volume considerations.

E.4 Zone Fire Model Using Algebraic Equations. A computer model (written in a programming language or using a spreadsheet) can be constructed using the algebraic equations contained in Chapters 5 and 6 in order to calculate the position of a smoke layer interface over time, with and without smoke exhaust. This approach involves the calculation of the mass flow rate of smoke entering the smoke layer, the temperature of the smoke entering the layer, and the mass flow rate of smoke removed from the smoke layer by mechanical or gravity venting. The steps used to calculate the position of the smoke layer interface are as follows:

(1) Select the time interval for the calculation, Δt. *(See Table E.4.)*

(2) Determine the design fire (e.g., steady, growing fire, growing fire with steady maximum, or other description of heat release rate as a function of time). *(See Section 5.2 for a discussion of design fires.)*

(3) For an unsteady fire, calculate or specify the heat release rate, Q, of the design fire at the midpoint of the current time interval. Calculate the convective portion of the heat release rate, Q_c, at the midpoint of the current time interval.

(4) Calculate the mass flow rate of smoke entering the smoke layer during the current time interval. For an axisymmetric plume, the plume mass flow rate should be calculated using either Equation 6.2.1.1b or 6.2.1.1c, depending on the position of the smoke layer at the end of the previous time interval relative to the flame height of the design fire. For a balcony spill plume, the plume mass flow rate should be calculated using Equation 6.2.2.1. For a window plume, the plume mass flow rate should be calculated using Equation 6.2.3.2.

(5) Calculate the temperature of the smoke entering the smoke layer using Equation 6.2.5.

(6) Calculate the mass of smoke in the smoke layer at the end of this time interval as follows:

$$M_2 = M_1 + \left(m_p - m_e\right)\Delta t \qquad \textbf{(E.4a)}$$

where:
M_2 = mass of smoke in the smoke layer at the end of current time interval (kg)
M_1 = mass of smoke in the smoke layer at the start of current time interval (kg)
m_p = mass flow rate of plume (kg/sec)
m_e = mass flow rate of exhaust (kg/sec)
Δt = time interval (sec)

When there are more than one exhaust points from the smoke layer, the mass flow rate of exhaust, m_e, is the total of the flows from all the exhaust points.

Copyright National Fire Protection Association
Provided by IHS under license with NFPA
No reproduction or networking permitted without license from IHS
Not for Resale

Table E.4 The Effect of Time Interval on the Accuracy of Smoke Filling Simulations[1] [44]

Atrium Height, *H*		Cross-Sectional Area, *A*		Time Interval, Δt	Steady Fire[2]		Fast *t*-squared Fire[3]	
					Simulation Time	Error[4]	Simulation Time	Error[4]
ft	m	ft²	m²	(s)	s	%	s	%
Small Atrium								
30	9.14	1,000	93	0.005	30	0.0	90	0.0
				0.01	30	0.0	90	0.0
				0.05	30	0.2	90	0.1
				0.20	30	1.2	90	0.2
				0.50	30	3.7	90	0.6
				1.00	30	7.7	90	1.2
				5.00	30	65.0	90	6.1
Small Spread Out Atrium								
30	9.14	12,000	1,110	0.01	240	0.0	300	0.0
				0.05	240	0.0	300	0.0
				0.20	240	0.1	300	0.1
				0.50	240	0.1	300	0.1
				1.00	240	0.3	300	0.3
				5.00	240	1.5	300	1.5
				20.00	240	6.3	300	6.4
Large Atrium								
150	45.7	25,000	2,320	0.01	480	0.0	300	0.0
				0.05	480	0.0	300	0.0
				0.20	480	0.0	300	0.1
				0.50	480	0.1	300	0.1
				1.00	480	0.3	300	0.3
				5.00	480	1.4	300	1.4
				20.00	480	6.0	300	5.8
Large Spread Out Atrium								
150	44.7	300,000	27,900	0.01	1200	0.0	600	0.0
				0.05	1200	0.0	600	0.0
				0.20	1200	0.0	600	0.0
				0.50	1200	0.0	600	0.0
				1.00	1200	0.0	600	0.0
				5.00	1200	0.1	600	0.2
				20.00	1200	0.2	600	0.7

[1]Calculations were done with AZONE with the following conditions: (1) ambient temperature of 70°F (21°C), (2) constant cross-sectional area, (3) no smoke exhaust, (4) top of fuel at floor level, (5) wall heat transfer fraction of 0.3.

[2]The steady fire was 5000 Btu/s (5275 kW).

[3]For the *t*-squared fire, the growth time was 150 s.

[4]The error, δ, is the error of the smoke layer height, z, using the equation $\delta = 100(z_m - z)/z$, where z_m is the value of z at the smallest time interval listed in the table for that atrium size.

(7) Calculate the energy of the smoke layer as follows:

$$E_2 = E_1 + C_p\left[m_p T_p - m_e T_{s,1} - \eta m_p\left(T_p - T_o\right)\right]\Delta t \quad \textbf{(E.4b)}$$

where:

E_2 = energy of the smoke layer at the end of the time interval (kJ)
E_1 = energy of the smoke layer at the beginning of the time interval (kJ)
C_p = specific heat of the smoke (kJ/kg-K)
T_p = absolute temperature of plume (K)
$T_{s,1}$ = absolute temperature of the smoke layer at the start of current time interval (K)
η = heat loss factor (dimensionless)
T_o = absolute ambient temperature (K)

The heat loss factor is the fraction of the convective heat release rate that is transferred from the smoke layer to the ceiling and walls, and it has a maximum value of 1.0. The maximum temperature rise occurs where the heat loss factor is zero.

Copyright National Fire Protection Association
Provided by IHS under license with NFPA
No reproduction or networking permitted without license from IHS
Not for Resale

(8) Calculate the new temperature of the smoke layer as follows:

$$T_{s,2} = \frac{E_2}{C_p M_2} \quad \textbf{(E.4c)}$$

where:
$T_{s,2}$ = the absolute temperature of the smoke layer at the end of current time interval (K)

(9) Calculate the density of the smoke layer:

$$\rho_s = \frac{P_o}{R T_{s,2}} \quad \textbf{(E.4d)}$$

where:
ρ_s = density of the smoke layer at the end of the time interval (kg/m^3)
P_o = ambient pressure (Pa)
R = gas constant of smoke layer (287 J/kg-K)

(10) Calculate the volume of the smoke layer as follows:

$$V_2 = \frac{M_2}{\rho_s} \quad \textbf{(E.4e)}$$

where:
V_2 = the volume of the smoke layer at the end of the time interval (m^3)

(11) Determine the new smoke layer interface position as a function of the upper layer volume and the geometry of the smoke reservoir. For constant cross-sectional areas, the smoke layer position is calculated as follows:

$$z_2 = H_{ceiling} - \frac{V_2}{A_{reservoir}} \quad \textbf{(E.4f)}$$

where:
z_2 = smoke layer interface height above floor at the end of the time interval (m)
$H_{ceiling}$ = ceiling height above floor (m)
$A_{reservoir}$ = area of reservoir (m^2)

(12) Stop calculations if the maximum number of time intervals has been reached or if the smoke layer interface is at or below the top of the fuel.
(13) Return to interval (3) and use the newly calculated values for the calculations of the next time interval.

The Fortran computer program, AZONE, provided with the smoke management book by Klote and Milke [44], is an example of the preceding routine. However, AZONE has a number of features not included in the routine. AZONE is capable of dealing with large spaces of variable cross-sectional area. It can also simulate the effect of plugholing on the exhaust flow rate.

Annex F Computational Fluid Dynamic (CFD) Models

This annex is not part of the requirements of this NFPA document but is included for informational purposes only.

F.1 Overview. CFD models, also referred to as field models, usually require large-capacity computer workstations or mainframe computers and advanced expertise to operate and interpret. CFD models, however, can potentially overcome the limitations of zone models and complement or supplant scale models.

As with zone models, CFD models solve the fundamental conservation equations. In CFD models, the space is divided into many cells and use the governing equations to solve the movement of heat and mass between the cells. The governing equations include the equations of conservation of mass, momentum, and energy. These partial differential equations can be solved numerically by algorithms specifically developed for that purpose. For smoke management applications, the number of cells is generally in the range from tens of thousands to millions.

Because of the very large number of cells, CFD models avoid the more generalized engineering equations used in zone models. Through the use of small cells, CFD models can examine the situation in much greater detail and account for the impact of irregular shapes and unusual air movements that cannot be addressed by either zone models or algebraic equations. The level of refinement exceeds that which can usually be observed or derived from scale models.

The conservation equations are generally expressed in either vector notation or tensor notation. For information about these mathematical forms of notation see Bousenho and Tarapov and Hay [9, 27]. Information about the governing equations is provided in many fluid dynamics texts [93, 79, 80, 81]. For a detailed derivation of the governing equations see Aris [4]. For a general overview of CFD modeling see Klote [44]. For more detailed information about CFD modeling see Anderson, Tannehill, and Pletcher [3]; Abbott and Basco [1]; Hoffmann [42]; Markatos [53]; Hirsch [40, 41]; and Kumar [45].

F.2 General and Specific Application Models. Many computer CFD programs have been developed that are capable of simulation of fire-induced flows. Friedman [20] discusses ten such codes. Several of these are general purpose codes that are commercially available. Some commercially available codes require that the user do computer programming in order to simulate fire-induced smoke transport.

The Fire Dynamics Simulator (FDS) model [54B, 54A] was developed specifically for fire applications. FDS can be considered the product of decades of basic research in CFD modeling of fire and smoke transport conducted at the National Institute of Standards and Technology (NIST) in Gaithersburg, Maryland. FDS is in the public domain, and it can be obtained from NIST at no cost.

F.3 Simplifications of CFD Models. The items the modeler must accurately characterize are the fuel, the compartment, and the ambient conditions, as follows:

(1) Burning fuel description:
  (a) Heat release rate as it changes with time
  (b) Fire elevation
  (c) Radiation fraction
  (d) Species production rate
  (e) Area of fire (line, pool, or gaseous)
(2) Compartment description:
  (a) Height of ceiling
  (b) Size, location, and dynamic status (open or closed) of the vent (including leakage area)
  (c) Thermophysical properties of wall, ceiling, and floor material
  (d) Location, capacity, and status of mechanical ventilation
  (e) Presence of beams or trusses
  (f) Smoke transport time in the plume or ceiling jet
  (g) Structural failure
  (h) Initial temperature

Copyright National Fire Protection Association
Provided by IHS under license with NFPA
No reproduction or networking permitted without license from IHS
Not for Resale

(3) Ambient conditions description:
  (a) Elevation
  (b) Ambient pressure
  (c) Ambient temperature
  (d) Wind speed and direction
  (e) Relative humidity
  (f) Outside temperature

The fuel heat release rate is an important feature to describe. There are many other details of the fuel that also affect fire growth, such as species production, radiative heat loss fraction, fuel-to-air combustion ratio, and heat of combustion. However, the desired accuracy of the answer dictates which of these should be included and which can be ignored. Compartment vent descriptions must also be properly evaluated. Often, leakage areas can account for substantial, unanticipated gas flows, especially in instances of extreme weather conditions with regard to temperature or wind.

Translating actual characteristics into a format recognizable as model input is the second major area of fire modeling. Some items simply do not merit attention because of their lower-order effects. Other items must be represented in ways that are altered somewhat. An example of the first case is excluding a mechanical ventilation duct when a large door to a room remains open. An example of the second case is a fire burning along a 5 ft vertical section of wall. The height of the fire is best described as the floor level, the lowest point where flames can entrain air.

The last area of understanding is perhaps the most difficult for the novice to master; this pertains to understanding how the model converts input to output. It is not practical for the new user to grasp every detail of this transformation process, but it is possible for the novice to anticipate many results with a basic comprehension of fire dynamics [16, 17] and working knowledge of the conservation equations. The conservation laws can be expressed with differential equations to reproduce the smooth, continuous changes exhibited by properties behaving in real fires. To the degree that the mathematics deviates from the differential representation of the conservation laws, the more uncertain the model accuracy becomes outside the range of verification. The potential for model inaccuracy is affected by the relative influence of the particular term in the equation. Terms having the greatest influence contain variables that are raised to exponential powers greater than 1.

Algebraic correlations, other fire models, scale models, and common sense can be used to verify model accuracy. The algebraic equations are only verified given the experimental conditions from which they were correlated. Projections beyond these experimental domains can be based on trends at the experimental endpoints. Using one model to verify another model ensures precision but not necessarily accuracy, unless the second model was independently verified.

Annex G Additional Design Objectives

This annex is not a part of the requirements of this NFPA document but is included for informational purposes only.

G.1 In addition to the design objectives listed in Section 1.2, smoke management systems can also be used for the following objectives:

(1) Allowing fire department personnel sufficient visibility to approach, locate, and extinguish a fire
(2) Limiting the rise of the smoke layer temperature and toxic gas concentration, and limiting the reduction of visibility

G.1.1 Egress Analysis. Timed egress analysis is outside the scope of this document. However, other references are available that present analytical methods for use in egress analysis [44, 69].

G.1.2 Tenability. Factors that should be considered in a tenability analysis include the following:

(1) Heat exposure
(2) Smoke toxicity
(3) Visibility

Methods for tenability analysis are outside the scope of this document. However, other references are available that present analytical methods for tenability analyses [34].

G.1.3 Equations to calculate the smoke layer depth, average temperature rise, optical density, and species concentrations during the smoke-filling stage and the quasi-steady vented stage are provided in Table G.1.3. These equations apply to fires with constant heat release rates and *t*-squared fires. These equations can also be used to calculate the conditions within the smoke layer once the vented conditions exist.

Table G.1.3 Equations for Calculating Properties of Smoke Layer

	Unvented Fires		
Parameters	**Steady Fires**	***t*-squared Fires**	**Vented Fires**
ΔT	$T_o\{[\exp(Q_n/Q_o)] - 1\}$	$T_o\{[\exp(Q_n/Q_o)] - 1\}$	$[60(1-\chi_l)Q_c]/(\rho_o c_p V)$
D	$(D_m Q t)/[\chi_a \Delta H_c A(H-z)]$	$(D_m \alpha t^3)/[3\chi_a \Delta H_c A(H-z)]$	$(60 D_m Q)/(\chi_a \Delta H_c V)$
Y_i	$(f_i Q t)/[\rho_o \chi_a \Delta H_c A(H-z)]$	$(f_i \alpha t^3)/[3\rho_o \chi_a \Delta H_c A(H-z)]$	$(60 f_i Q)/(\rho_o \chi_a \Delta H_c V)$

where:
A = horizontal cross-sectional area of space (ft^2)
c_p = specific heat of ambient air (Btu/lb·°F)
$D = L^{-1} \log(I_o/I)$, optical density
$D_m\, DV/m_f$ = mass optical density (ft^2/lb) measured in a test stream containing all the smoke from a material test sample
f_i = yield factor of species i (lb species i/lb fuel)
H = ceiling height (ft)
ΔH_c = heat of complete combustion (Btu/lb)
Q = heat release rate of fire (Btu/sec)
Q_c = convective portion of heat release rate (Btu/sec)
$Q_n = \int(1-\chi_l)\, Q\, dt$
  for steady fires: $Q_n = (1-\chi_l)\, Qt$ (Btu)
  for t^2 fires: $Q_n = (1-\chi_l)\, \alpha t^3/3$ (Btu)
$Q_o = \rho_o c_p T_o A\ (H-z)$ (Btu)
t = time from ignition (sec)
T_o = absolute ambient temperature (R)
ΔT = temperature rise in smoke layer (°F)
V = volumetric venting rate (ft^3/min)
Y_i = mass fraction of species i (lb species i/lb of smoke)
z = height from top of fuel to smoke layer interface (ft)
$\alpha = t^2$ fire growth coefficient (Btu/sec^3)
ρ_o = density of ambient air (lb/ft^3)
χ_α = combustion efficiency factor, maximum value of 1 [86]
χ_l = total heat loss factor from smoke layer to atrium boundaries, maximum value of 1, maximum temperature rise will occur if $\chi_l = 0$

Copyright National Fire Protection Association
Provided by IHS under license with NFPA
No reproduction or networking permitted without license from IHS
Not for Resale

For design purposes, the topic of algebraic equations for gas concentrations and obscuration of visibility can be addressed for two limit cases:

(1) The smoke-filling scenario, where all products of combustion are assumed to accumulate in the descending smoke layer
(2) The quasi-steady vented scenario, where a quasi-steady balance exists between the rates of inflow into and outflow from the smoke layer

Normally, the quasi-steady vented scenario is of interest for design purposes because this scenario represents the quasi-steady conditions that develop with a smoke extraction system operating. The smoke-filling scenario might be of interest to analyze the conditions that can develop before the smoke extraction system is actuated. A transient period exists between these two limit cases. During this transient intermediate period, the smoke layer is both filling and being exhausted. Analysis of this transient period generally requires numerical computer-based approaches. From a design standpoint, this period should be of little consequence since it is not a limit case, so it is not addressed further.

Methods to analyze the gas composition and optical characteristics for the two limit cases can be addressed in terms of a number of algebraic equations. These algebraic equations are exact, but the data used in these equations are uncertain [55]. The user should be made aware of these uncertainties to the extent they are known.

G.2 Smoke-Filling Stage — Optical Properties Analysis. The average optical density of the descending smoke layer can be estimated if the mass optical density of the fuel can be reasonably estimated. Equation G.2a is used to estimate the optical density as a function of the mass optical density, the mass of fuel consumed, and the volume of the smoke layer.

$$D = \frac{D_m m_f}{V_u} = \frac{D_m \int_0^t \dot{m}_f dt}{A z_u(t)} \qquad \textbf{(G.2a)}$$

where:
D_m = mass optical density [ft^2/lb (m^2/kg)]
m_f = total fuel mass consumed [lb (kg)]
V_u = volume of upper layer [ft^3 (m^3)]
$\dot{m}_f$ = burning rate of fuel [lb/sec (kg/sec)]
A = horizontal cross-sectional area of atrium [ft^2 (m^2)]
z_u = depth of upper layer [ft (m)]

For the case of a flat ceiling, negligible plume area, and a fire with constant mass and heat release rates, Equation G.2a evaluates as follows:

$$D = \frac{D_m Q t}{\chi_a \Delta H_c A_u H}\left[1 - \left(1 + \frac{2t}{3\tau}\right)^{-3/2}\right]^{-1} \qquad \textbf{(G.2b)}$$

$$\tau = \frac{V}{V_{ent}} = \frac{AH}{k_v Q^{1/3} H^{5/3}} = \frac{AH}{k_v \left(\alpha_n t^n\right)^{1/3} H^{5/3}} \qquad \textbf{(G.2c)}$$

where:
V = volume of atrium [ft^3 (m^3)]
V_{ent} = volumetric rate of air entrainment [ft^3/sec (m^3/sec)]
k_v = volumetric entrainment constant [0.32 ft$^{4/3}$/Btu$^{1/2}$sec$^{2/3}$ (0.064 m$^{4/3}$/kW$^{1/3}$sec)]
Q = heat release rate from fire [Btu/sec (kW)]
ΔH_c = heat of combustion [Btu/lb (kJ/kg)]
H = height of ceiling above floor [ft (m)]
χ_a = combustion efficiency

For the case of a flat ceiling, negligible plume area, and a t-squared fire, Equation G.2a evaluates as follows:

$$D = \frac{D_m \alpha t^3}{3\chi_a \Delta H_c A H}\left[1 - \left(1 + \frac{2k_v \alpha^{1/3} t^{5/3} H^{2/3}}{5A}\right)^{-3/2}\right]^{-1} \qquad \textbf{(G.2d)}$$

where:
α = fire growth rate = $1000/(t_g)^2$ (sec)

For other scenarios, appropriate values must be substituted into Equation G.2a. For some scenarios, numerical integration might be necessary.

G.3 Smoke-Filling Stage — Layer Composition Analysis. Analysis of the composition of the smoke layer is analogous in many respects to the analysis of the optical density of the layer. To analyze the smoke layer composition as a function of time, a yield factor, f_i, must first be assigned for each species i of interest, as follows:

$$\dot{m}_i = f_i \dot{m}_f \qquad \textbf{(G.3a)}$$

where:
f_i = yield factor ($lb_{product}/lb_{fuel}$) ($kg_{product}/kg_{fuel}$).

The mass fraction, Y_i, of each species in the smoke layer is as follows:

$$Y_i = \frac{m_i}{\sum_i m_i} \qquad \textbf{(G.3b)}$$

where Y_i = mass fraction ($lb_{species}/lb_{total}$) ($kg_{species}/kg_{total}$).

The term in the numerator of Equation G.3b is calculated, similar to Equation G.2a, as follows:

$$m_i = \int_0^t \dot{m}_i \, dt = \int_0^t f_i \dot{m}_f \, dt = \int_0^t f_i \frac{Q}{\chi_a \Delta H_c} dt \qquad \textbf{(G.3c)}$$

For the case of a constant yield factor and a t-squared fire growth rate, Equation G.3c evaluates as follows:

$$\dot{m}_i = f_i \int_0^t \frac{\alpha t^2}{\chi_a \Delta H_c} \, dt = \frac{f_i \alpha t^3}{3\chi_a \Delta H_c} \qquad \textbf{(G.3d)}$$

For the case of a constant yield factor and a steady fire, Equation G.3c evaluates as follows:

$$m_i = \int_0^t f_i \frac{Q}{\chi_a \Delta H_c} \, dt = \frac{f_i Q t}{\chi_a \Delta H_c} \qquad \textbf{(G.3e)}$$

The term in the denominator of Equation G.3b represents the total mass of the smoke layer. Typically, the mass of fuel released is negligible compared to the mass of air entrained into the smoke layer, so the total mass of the smoke layer can be approximated as follows:

$$\sum_i m_i = \bar{\rho} V_u \frac{\rho_o T_o V_u}{T} \qquad \textbf{(G.3f)}$$

For the case where the temperature rise of the smoke layer is small relative to the ambient absolute temperature [i.e., $\left(\bar{T}/T_o \approx 1\right)$], Equation G.3f reduces to the following:

$$\sum_i m_i = \rho_o V_u \qquad \textbf{(G.3g)}$$

Copyright National Fire Protection Association
Provided by IHS under license with NFPA
No reproduction or networking permitted without license from IHS
Not for Resale

Substituting Equations G.3d and G.3g into Equation G.3b yields, for the *t*-squared fire, as follows:

$$Y_i = \frac{f_i \alpha t^3}{3\rho_o V_u \chi_a \Delta H_c} \quad \textbf{(G.3h)}$$

Substituting Equations G.3e and G.3g into Equation G.3b yields, for the steady fire, as follows:

$$Y_i = \frac{f_i Q t}{\rho_o V_u \chi_a \Delta H_c} \quad \textbf{(G.3i)}$$

For a fire that grows as a *t*-squared fire from $Q = 0$ at time $t = 0$ to $Q = Q_{qs}$ at time $t = t_{qs}$, then continues to burn indefinitely at $Q = Q_{qs}$, Equations G.3h and G.3i can be combined to yield the following:

$$Y_i = \frac{f_i \left[\dfrac{\alpha t_{qs}^3}{3 + Q_{qs}\left(t - t_{qs}\right)} \right]}{\rho_o V_u \chi_a \Delta H_c} \quad \textbf{(G.3j)}$$

The volume of the smoke layer, V_u, in these equations is evaluated by the methods presented in Section 6.2 with $V_u = A(H - z)$.

G.4 Quasi-Steady Ventilated Stage — Optical Properties Analysis. Under quasi-steady ventilated conditions, a balance exists between the rate of mass inflow into the smoke layer and the rate of mass outflow from the smoke layer. The average optical density of the smoke layer can be calculated on a rate basis as follows:

$$D = \frac{D_m Q}{V} = \frac{D_m Q}{\chi_a \Delta H_c V} \quad \textbf{(G.4a)}$$

Equation G.4a can be used to determine the average optical density of the smoke layer for a given exhaust rate. Alternatively, the required exhaust rate needed to produce a particular optical density, *D*, can be determined by rearranging Equation G.4a as follows:

$$V = \frac{D_m Q}{D \chi_a \Delta H_c} \quad \textbf{(G.4b)}$$

Use of Equations G.4a and G.4b requires knowledge of the mass optical density, D_m, of the smoke. Mass optical densities for a variety of fuels are reported by Tewarson [86] and Mulholland [64].

Values reported by these investigators are based on small-scale fire tests, generally conducted under well-ventilated conditions. It should be recognized that the optical properties of smoke can be affected by ventilation, so it is not clear how well these small-scale data correlate with large-scale behavior, particularly for scenarios where the large-scale conditions include underventilated fires. This topic requires further research.

G.5 Quasi-Steady Ventilated Stage — Layer Composition Analysis. The mass fraction of each species *i* in the smoke layer under quasi-steady flow conditions is given in general by the following:

$$Y_i = \frac{\dot{m}_i}{\sum_i \dot{m}_i} \quad \textbf{(G.5a)}$$

Under quasi-steady flow conditions, the mass flow rate of each species is given as follows:

$$\dot{m}_i = f_i \dot{m}_f = f_i \frac{Q}{\chi_a \Delta H_c} \quad \textbf{(G.5b)}$$

The total mass flow rate under quasi-steady conditions is given by the following:

$$\sum_i \dot{m}_i = \bar{\rho} V = \rho_o V_{ent} = \rho_o \left(V - V_{exp}\right) \quad \textbf{(G.5c)}$$

Substituting Equations G.5b and G.5c into Equation G.5a permits calculation of the mass fraction for each species *i* of interest in terms of a known exhaust rate, as follows:

$$Y_i - Y_{i,o} = \frac{f_i Q}{\rho_o \chi_a \Delta H_c \left(V - V_{exp}\right)} \quad \textbf{(G.5d)}$$

To determine the required volumetric exhaust rate needed to limit the mass fraction of some species *i* to a limit value, Y_i, Equation G.5e is arranged to the following:

$$V = V_{exp} + \frac{f_i Q}{\rho_o \chi_a \Delta H_c \left(Y_i - Y_{i,o}\right)} \quad \textbf{(G.5e)}$$

The volumetric expansion rate, V_{exp}, is calculated as follows:

$$V_{exp} = \frac{Q_n}{\rho_o c_p T_o} = \frac{(1 - \chi_i) Q}{\rho_o c_p T_o} \quad \textbf{(G.5f)}$$

Annex H Stratification of Smoke

This annex is not a part of the requirements of this NFPA document but is included for informational purposes only.

H.1 Introduction. When the temperature of the air in the upper portion of the large space is greater than that at lower levels, smoke can stratify under the hot layer of air and not reach ceiling-mounted smoke detectors.

The potential for stratification relates to the difference in temperature between the smoke and surrounding air at any elevation as explained by Morton, Taylor, and Turner [61]. The maximum height to which plume fluid (smoke) rises, especially early after ignition, depends on the convective heat release rate and the ambient temperature variation in the open space.

Of particular interest are those situations when the temperature of the air in the upper portion of the large open space is greater than at lower levels before the fire. This can occur as a result of a solar load where the ceiling contains glazing materials. Computational methods are available to assess the potential for intermediate stratification.

One case of interest is depicted in Figure H.1. In this case, the temperature of the ambient air is relatively constant up to a height above which there is a layer of warm air at uniform temperature. This situation can occur if the upper portion of a mall, atrium, or other large space is unoccupied so that the air in that portion is left unconditioned.

If the interior air has a discrete temperature change at some elevation above floor level, the potential for stratification can be assessed by applying the plume centerline temperature correlation. If the plume centerline temperature is equal to the ambient temperature, the plume is no longer buoyant, loses its ability to rise, and stratifies at that height.

Once a smoke evacuation system has started in an atrium or other large space, the stratification condition will be eliminated by removal of the hot layer. The problem facing the designer is how to ensure that the presence of smoke is promptly detected through all potential pre-fire temperature profiles. Under some conditions, such as nights and cold days, it is probable that a stratification condition will not be present

--`,,,```-`-`,,`,,`,`,,`---

Copyright National Fire Protection Association
Provided by IHS under license with NFPA
No reproduction or networking permitted without license from IHS
Not for Resale

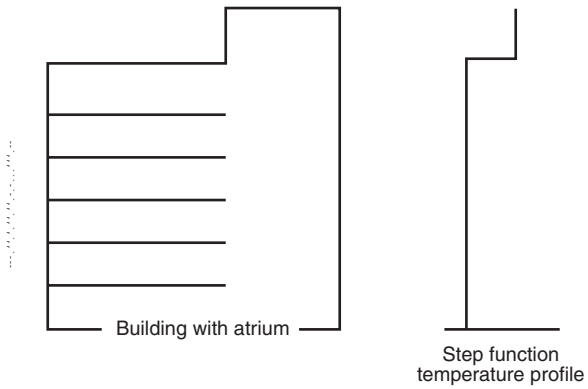

FIGURE H.1 Pre-Fire Temperature Profile.

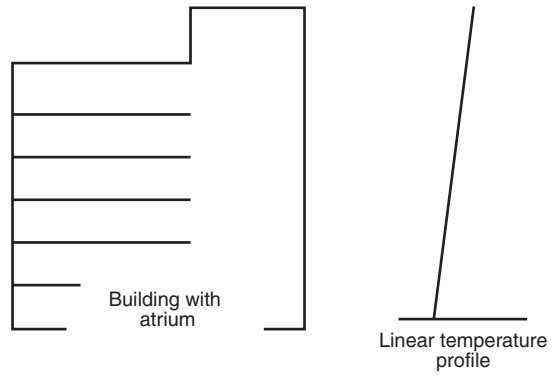

FIGURE H.2 Unusual Case of Linear Temperature Profile.

and any smoke plume will promptly rise to the roof or ceiling of the volume, in which case detection at or near the top of the volume would be responsive. In other cases, such as hot summer days or days with a high solar load, the plume might not reach the top of the volume and the smoke can spread at a level lower than intended, in which case detection near the top of the volume would not respond and the smoke management system would not be started. There is no sure way of identifying what condition will be present at the start of a fire; however, the beam smoke detectors can be used to detect smoke with and without smoke stratification.

H.2 Temperature Gradient. Another case for which a solution has been developed is depicted in Figure H.2.

In this case, the ambient interior air within the large space has a constant temperature gradient (temperature change per unit height) from floor level to ceiling. This case is less likely than temperatures that approximate a step function. For the linear temperature profile, the maximum height that smoke will rise can be derived from the pioneering work of Morton, Taylor, and Turner [61], as follows:

$$z_m = 14.7 Q_c^{1/4} \left(\frac{\Delta T}{dz} \right)^{-3/8} \qquad \textbf{(H.2a)}$$

where:

z_m = maximum height of smoke rise above base of fuel (ft)
Q_c = convective portion of the heat release rate (Btu/sec)
$\Delta T/dz$ = rate of change of ambient temperature with respect to height (°F/ft)

The convective portion of the heat release rate, Q_c, can be estimated as 70 percent of the total heat release rate.

The minimum Q_c required to overcome the ambient temperature difference and drive the smoke to the ceiling ($z_m = H$) follows readily from the preceding equation, as follows:

$$Q_{c,\min} = 2.39 \times 10^{-5} H^{5/2} \Delta T_o^{3/2} \qquad \textbf{(H.2b)}$$

where:

$Q_{c,\,\min}$ = minimum convective heat release rate to overcome stratification (Btu/sec)
H = ceiling height above fire surface (ft)
ΔT_o = difference between ambient temperature at the ceiling and ambient temperature at the level of the fire surface

Alternatively, an expression is provided in terms of the ambient temperature increase from floor to ceiling, which is just sufficient to prevent a plume of heat release, Q_c, from reaching a ceiling of height H, as follows:

$$\Delta T_o = 1300 Q_c^{2/3} H^{5/3} \qquad \textbf{(H.2c)}$$

Finally, as a third alternative, the maximum ceiling clearance to which a plume of strength, Q_c, can rise for a given ΔT_o follows from rewriting the preceding equation, as follows:

$$H_{\max} = 74 Q_c^{2/5} \Delta T_o^{3/5} \qquad \textbf{(H.2d)}$$

Annex I Comparison of Equations

This annex is not a part of the requirements of this NFPA document but is included for informational purposes only.

I.1 Calculation results using Equation 6.1.2.2 or 6.1.2.2a that yield $z/H > 1.0$ indicate that the smoke layer has not yet begun to descend. Equations 6.1.2.2 and 6.1.2.2a are based on limited experimental data.

Equations 6.1.2.1 and 6.1.2.2 are empirically based for estimating the smoke layer interface position during the smoke-filling process. This review of Equations 6.1.2.1 and 6.1.2.2 is divided into two parts as follows:

(1) Comparison of the results of both Equations 6.1.2.1 and 6.1.2.2 with those from theoretically based equations (with empirically determined constants), hereafter referred to as ASET-based equations
(2) Evaluation of the predictive capability of Equation 6.1.2.1 and an ASET-based equation by comparing the output from the equations with experimental data

I.2 Comparisons with ASET-Based Equations. Comparisons of the NFPA 92B equations for smoke filling with ASET-based equations provide an indication of the differences between empirically based equations, for example, Equations 6.1.2.1 and 6.1.2.2, with those that are based principally on theory.

I.3 Steady Fires. A theoretically based equation for smoke filling can be derived using the laws of conservation of mass and energy to determine the additional volume being supplied to the upper layer [55]. Using Zukoski's plume entrainment correlation [96],

Copyright National Fire Protection Association
Provided by IHS under license with NFPA
No reproduction or networking permitted without license from IHS
Not for Resale

$$\frac{z}{H} = \left(1 + \frac{2k_v \dfrac{tQ^{1/3}}{H^{4/3}}}{3\dfrac{A}{H^2}} \right)^{-3/2} \qquad \textbf{(I.3a)}$$

where:

z = smoke layer interface position above base of fuel (m)
H = ceiling height (m)
k_v = entrainment constant $\approx 0.064\ m^{4/3}/(sec\text{-}kW^{1/3})$
t = time from ignition (sec)
Q = heat release rate (kW)
A = cross-sectional area of space (m^2)

A comparison of z/H predicted by Equations 6.1.2.1 and I.3a is presented in Figure I.3(a) for a ceiling height of 30 m, a steady fire size of 5 MW, and a wide range of A/H^2 ratios. In general, the agreement between the two equations is reasonable. Equation 6.1.2.1 predicts a lower smoke layer interface position at most times, except in the case of the voluminous space represented by A/H^2 of 10. In this case, Equation 6.1.2.1 indicates a delay of approximately 100 seconds before a layer forms, while Equation I.3a indicates immediate formation of the layer. Such a delay is reasonable for such a large space. This delay can be addressed by including an additional term in Equation I.3a to account for the transport lag [62]. The transport lag is estimated as 37 seconds for this case, with a height of 30 m and a cross-sectional area of 9000 m^2.

While the comparison in Figure I.3(a) is useful, it applies only to selected values of A, H, and Q. This comparison can be generalized for all values of A, H, and Q by forming a ratio of the two equations expressed in terms of t, as follows:

$$\frac{t_{eqn\ 1.3a}}{t_{eqn\ 6.1.2.1}} = \frac{3}{2k_v} \frac{\left[\left(\dfrac{z}{H} \right)^{-2/3} - 1 \right]}{\exp\left(\dfrac{1.11 - \dfrac{z}{H}}{0.28} \right)} \qquad \textbf{(I.3b)}$$

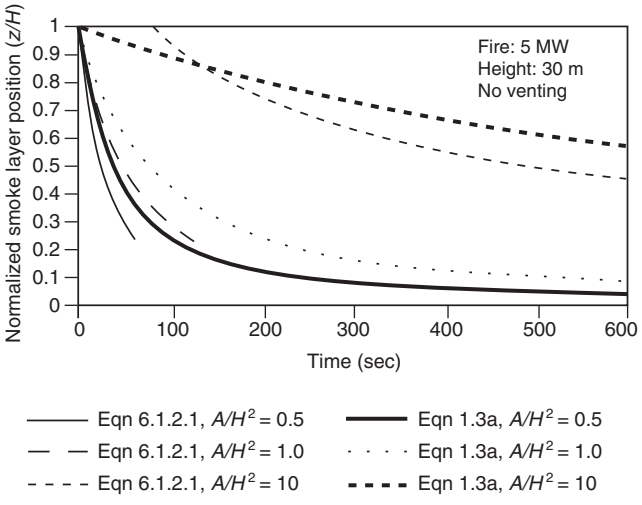

FIGURE I.3(a) Comparison of Algebraic Equations, Equations 6.1.2.1 and I.3a: Steady Fire.

Figure I.3(b) indicates the relationship of the time ratio with the normalized smoke layer depth, $(H - z)/H$. For perfect agreement between the two equations, the time ratio should have a value of 1.0. However, the time ratio varies appreciably. The time ratio is within 20 percent of 1.0 only for a very small range. For normalized smoke layer depths less than 0.13 (or a normalized clear height of 0.87), Equation I.3a always predicts a shorter time to reach a particular depth than Equation 6.1.2.1. Conversely, Equation 6.1.2.1 predicts shorter times to attain any normalized smoke layer depth in excess of 0.13.

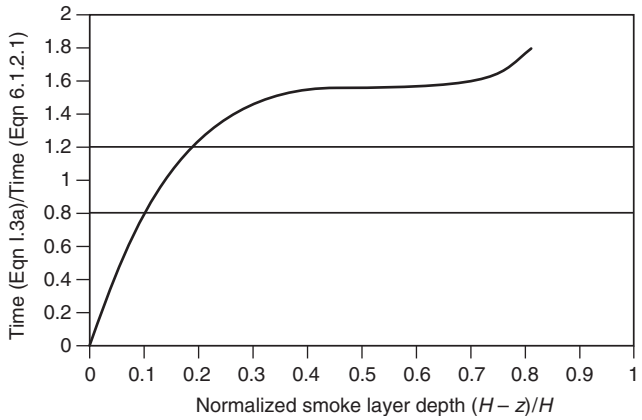

FIGURE I.3(b) Comparison of Algebraic Equations, Equations 6.1.2.1 and I.3a: Steady Fire — Normalized Smoke Layer Depth.

The time ratio is relatively insensitive for values of $(H - z)/H$, ranging from 0.4 to 0.6. Within this range, the time ratio is nominally 1.5, that is, the time predicted by Equation I.3a to obtain a smoke layer of a particular depth is 50 percent greater than that predicted by Equation 6.1.2.1. Alternatively, Equation 6.1.2.1 predicts a more rapid descent to this range of smoke layer depths than Equation I.3a.

I.4 *t*-squared Fires. A similar comparison of the empirically based Equation 6.1.2.2 and a theoretically based equation for *t*-squared fires can be conducted. The ASET-based equation is as follows:

$$\frac{z}{H} = \left(1 + \frac{\dfrac{20k_v t^{5/3}}{H^{-4/3}}}{t_g^{2/3}\dfrac{A}{H^2}} \right)^{-3/2} \qquad \textbf{(I.4a)}$$

where t_g = fire growth rate (sec).

A comparison of the predicted z/H values are presented in Figure I.4(a) for a ceiling height of 30 m, a moderate fire growth rate (t_g = 300 seconds), and a wide range of A/H^2 ratios. For values of A/H^2 up to 1.0, the agreement appears very reasonable once the smoke layer has formed. Again, the empirically derived equation implicitly includes the transport lag. For A/H^2 of 10.0, the delay for a smoke layer to form is greater than that for smaller A/H^2 ratios such that reasonable agreement in smoke layer interface position is not achieved until approximately 800 seconds. The estimated transport lag is 206 seconds [62].

--`,,,```-`-`,,`,,`,`,,`---
Copyright National Fire Protection Association
Provided by IHS under license with NFPA
No reproduction or networking permitted without license from IHS
Not for Resale

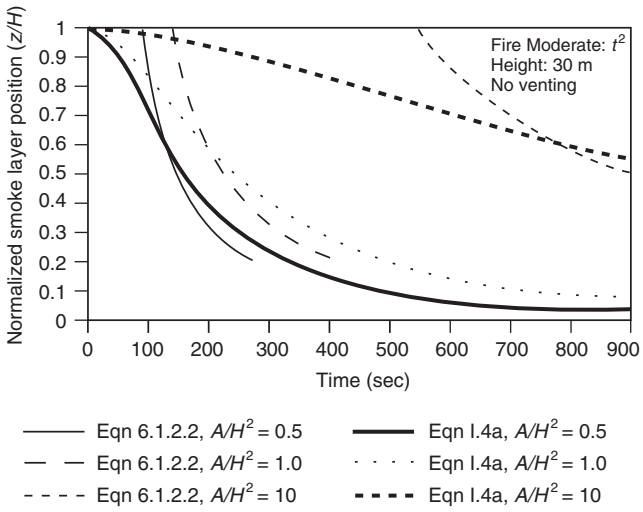

FIGURE I.4(a) Comparison of Algebraic Equations, Equations 6.1.2.2 and I.4a: *t*-squared Fire.

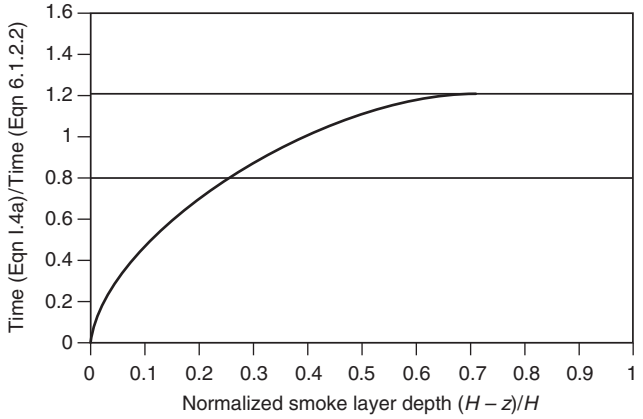

FIGURE I.4(b) Comparison of Algebraic Equations, Equations 6.1.2.2 and I.4a: *t*-Squared Fire — Normalized Smoke Layer Depths.

The value of z/H of 0.59 for the point of intersection of the various curves for the two equations is a constant, independent of the values for A, H, and Q. Thus, for values of $z/H > 0.59$, Equation I.4a estimates a shorter time to attain a particular position of the smoke layer interface, where Equation 6.1.2.2 estimates a faster time for lesser values of z/H.

Given the different exponents on the right side of the two equations, a general comparison is again only possible by solving for the times and expressing a ratio:

$$\frac{t_{eqn\ I.4a}}{t_{eqn\ 6.1.2.2}} = \left[\frac{(0.91)^{-0.69}}{4k_v^{-0.6}}\right]\left[\frac{\left[\left(\frac{z}{H}\right)^{-2/3} - 1\right]^{0.6}}{\left(\frac{z}{H}\right)^{-0.69}}\right] \qquad \textbf{(I.4b)}$$

The relationship of the time ratio for various normalized smoke layer depths, $(H - z)/H$, is provided in Figure I.4(b). In general, the agreement between the two predicted times for *t*-squared fires is much better than that for steady fires, with the predicted time using Equation I.4a being within 20 percent of that from Equation 6.1.2.2 for $(H - z)/H$ values from 0.26 to 0.80. As in the case of the steady fire, the time ratio is less than 1.0 for small normalized smoke layer depths. However, in this case, the time ratio does not exceed 1.0 until the normalized smoke layer depth is at least 0.40.

I.5 Large-Scale Experimental Programs in Tall Ceiling Spaces. The predictive capabilities of each equation can be examined by comparing their output to experimental data.

The predictive capability of Equation I.3a is examined by comparing the output to large-scale experimental data. Sources of the experimental data involving a range of ceiling heights from 2.4 m to 12.5 m as well as room sizes and fire scenarios are identified in Table I.5. Included in the table are the data sources referenced in the initial development of Equation 6.1.2.1 [32]. Two additional sets of experimental data have become available since the committee's initial analysis [96, 74]. Comprehensive descriptions of the test programs are provided elsewhere [24, 66, 14, 55]. Because the two additional sets of data were collected from fires in spaces with significantly greater ceiling heights than in the initial sets of data, the new sets of data are of particular interest.

The measured and predicted smoke layer positions as a function of time from the previous and two new sets of data are presented in Figure I.5. The data identified as "The Committee's" include all of the data upon which the committee based initial development of Equation 6.1.2.1. The new sets of data are identified separately. As indicated in the figure, the smoke layer position from the data analyzed is between that measured by NRCC and BRI. Thus, despite the differences in ceiling height, the new and initial sets of data appear to be reasonably similar. The graph labeled "NFPA 92B" depicts the predictions of Equation 6.1.2.1. In general, agreement between the predictions from both Equations 6.1.2.1 and I.3a and the experimental data is very reasonable. Equation 6.1.2.1 provides a lower limit of the experimental data, including the new NRCC data. Equation I.3a appears to predict a midrange value of the data.

Equations comparable to Equations 6.1.2.1 and I.3a can be derived for variable cross-sectional areas and for fires that follow a power law (e.g., *t*-squared fires). In addition, algebraic equations pertaining to a variety of smoke layer characteristics are available, including temperature, light obscuration, and species concentration [55]. These equations are applicable to evaluating transient conditions prior to operation of the smoke management system or equilibrium conditions with an operational smoke management system. Thus, a variety of algebraic equations are available and can serve as useful tools for relatively elementary designs or as checks of specific aspects of computer calculations for more complicated situations.

Copyright National Fire Protection Association
Provided by IHS under license with NFPA
No reproduction or networking permitted without license from IHS
Not for Resale

Table I.5 Summary of Full-Scale Experiments

Research Group	Fuel	Heat Release Rate	Dimension of Test Room	Measurements of Smoke Layer Position
New Data				
BRI [96]	Methanol pool, 3.24 m^2	1.3 MW (steady)	30 m × 24 m, height: 26.3 m	Visual observations, first temperature rise
NRCC [74]	Ethanol pool, 3.6 m diameter	8 MW (steady)	55 m × 33 m, height: 12.5 m	First temperature rise
Committee Data				
Sandia, Test 7 [71]	Propylene burner, 0.91 m diameter	516 kW	18.3 m × 12.2 m, height: 6.1 m	First temperature rise, carbon dioxide concentration
Mulholland [66]	Acetylene burner	16.2 kW	3.7 m × 3.7 m, height: 2.4 m	Temperature rise, light obscuration
Cooper [14]	Methane burner	25 kW, 100 kW, 225 kW	89.6 m^2 room, corridor and lobby height: 2.4 m	Temperature rise
Hagglund [24]	Kerosene pool, 0.5 m^2	280 kW	5.62 m × 5.62 m, height: 6.15 m	Visual observations, first temperature rise

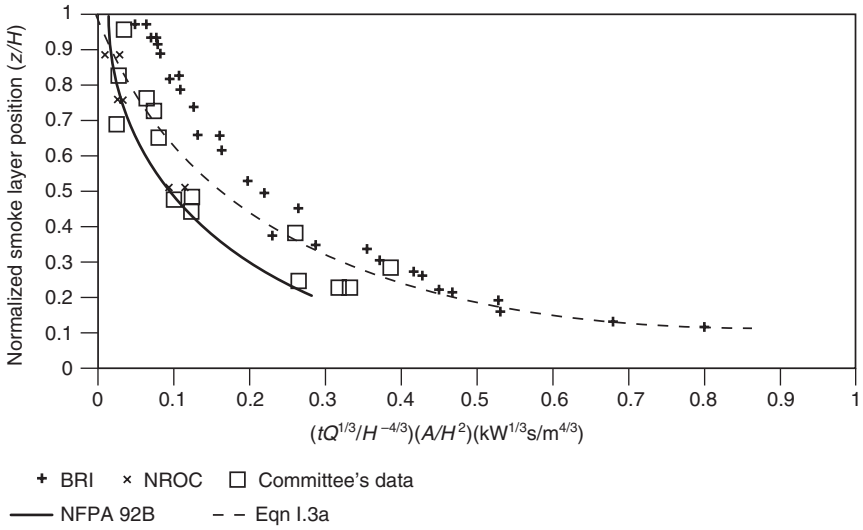

FIGURE I.5 Comparison of Smoke Layer Position, Experimental Data vs. Predictions.

Annex J Informational References

J.1 Referenced Publications. The following documents or portions thereof are referenced within this standard for informational purposes only and are thus not part of the requirements of this document unless also listed in Chapter 2.

J.1.1 NFPA Publications. National Fire Protection Association, 1 Batterymarch Park, Quincy, MA 02169-7471.

NFPA 13, *Standard for the Installation of Sprinkler Systems*, 2002 edition.

NFPA 72®, National Fire Alarm Code®, 2002 edition.

NFPA 90A, *Standard for the Installation of Air-Conditioning and Ventilating Systems*, 2002 edition.

NFPA 92A, *Recommended Practice for Smoke-Control Systems*, 2000 edition.

NFPA 204, *Standard for Smoke and Heat Venting*, 2002 edition.

NFPA 909, *Code for the Protection of Cultural Resource Properties — Museums, Libraries, and Places of Worship*, 2005 edition.

J.1.2 Other Publications.

J.1.2.1 ASHRAE Publication. American Society of Heating, Refrigerating and Air Conditioning Engineers, Inc., 1791 Tullie Circle, N.E., Atlanta, GA 30329-2305.

ASHRAE *Handbook of Fundamentals*, 2001.

J.1.2.2 ASTM Publications. American Society for Testing and Materials, 100 Barr Harbor Drive, West Conshohocken, PA 19428-2959.

ASTM E 1321, *Standard Test Method for Determining Material Ignition and Flame Spread Properties*, 1997.

ASTM E 1354, *Standard Test Method for Heat and Visible Smoke Release Rates for Materials and Products Using an Oxygen Consumption Calorimeter*, 1997.

Copyright National Fire Protection Association
Provided by IHS under license with NFPA
No reproduction or networking permitted without license from IHS
Not for Resale

J.1.2.3 Other Publications. *Merriam-Webster's Collegiate Dictionary*, 11th edition, Merriam-Webster, Inc., Springfield, MA, 2003.

J.2 Informational References. The following documents or portions thereof are listed here as informational resources only. They are not a part of the requirements of this document.

1. Abbott, M. B. and Basco, D. R, *Computational Fluid Dynamics: An Introduction for Engineers,* Wiley, New York, 1989.

2. Alpert, R. L. and Ward, E. J., *Evaluating Unsprinklered Fire Hazards,* FMRC No. 01836.20, Norwood, MA, Factory Mutual Research Corporation, pp. 46 and 48, August 1982.

3. Anderson, D. A., Tannehill J. C., and Pletcher, R. H., *Computational Fluid Mechanics and Heat Transfer,* Hemisphere, New York, 1984.

4. Aris, R., *Vectors, Tensors, and the Basic Equations of Fluid Mechanics,* Dover, New York, 1962.

5. Babrauskas, V., "Heat Release Rates," *SFPE Handbook of Fire Protection Engineering,* 3rd ed., P. J. DiNenno (ed.), National Fire Protection Association, Quincy, MA, 2002.

6. Babrauskas, V. and Krasny, J., *Fire Behavior of Upholstered Furniture,* NBS Monograph 173, National Bureau of Standards (now National Institute of Standards and Technology), November 1985.

7. Bennetts, I. D., Culton, M., Dickerson, M. L., Lewins, R., Poh, K. W., Poon, S. L., Ralph, R., Lee, A. C., Beever, P. F., Cooper, R. J., Haggar, P. I., Moore, I. P., Ramsay, G. C., and Timms, G. R., Simulated Shopping Centre Fire Tests, BHPR/SM/R.G/062, Broken Hill Proprietary Company Limited, Australia, 1997.

8. Beyler, C., "Fire Plumes and Ceiling Jets," *Fire Safety Journal,* 11, pp. 63–65, 1986.

9. Borisenko, A. I. and Tarapov, I. E., *Vector and Tensor Analysis with Applications,* Translated by R. A. Silverman, Dover, New York, 1968.

10. Bullen, M. C. and Thomas, P. A, "Compartment Fires with Non-Cellulosic Fuels; 17th Symposium (International) on Combustion," The Combustion Institute, pp. 1139–1148, 1979.

11. Carslaw, H. S. and Jaeger, J. C., *Conduction of Heat in Solids,* Oxford University, Oxford, 1959.

12. CIBSE, Relationships for Smoke Control Calculations, Technical Memoranda TM19, The Chartered Institution of Building Services Engineers, London, UK, 1995.

13. Cooper, L., *Smoke and Heat Venting, SFPE Handbook of Fire Protection Engineering,* National Fire Protection Association, Quincy, MA, pp. 3-160–3-173, 2002.

14. Cooper, L. Y., Harkleroad, M., Quintiere, J., and Rinkinen, W., "An Experimental Study of Upper Hot Layer Stratification in Full-Scale Multiroom Fire Scenarios," Paper 81-HT-9, the American Society of Mechanical Engineers, 1981.

15. Cooper, L. Y., Harkleroad, M., Quintiere, J., and Rinkinen, W., "An Experimental Study of Upper Hot Layer Stratification in Full-Scale Multiroom Fire Scenarios," *Journal of Heat Transfer,* 104, pp. 741–749, 1982.

16. DiNenno, P. J., ed., *SFPE Handbook of Fire Protection Engineering,* National Fire Protection Association, Quincy, MA, 2002.

17. Drysdale, D. D., *An Introduction of Fire Dynamics,* John Wiley & Sons, New York, 1985.

18. Emmons, H., "The Use of Fire Test Data in Fire Models," The Home Fire Project Technical Report No. 78, Harvard University, Division of Applied Sciences, February 1989.

19. Fang, J. B. and Breese. J. N., *Fire Development in Residential Basement Rooms,* NBSIR 80-2120, National Bureau of Standards, October 1980.

20. Friedman, R., *An International Survey of Computer Models for Fire and Smoke, Journal of Fire Protection Engineering,* Vol. 4, No. 3, pp. 81–92, 1992.

21. Ghosh, B. K., "Fires in Real Scenarios," International Symposium on Fire Science and Technology, ISFST 1997, Seoul, Korea, pp. 439–447, 1997.

22. Gottuk, D., Roby, R., and Eglo, C., "A Study of Carbon Monoxide and Smoke Yields from Compartment Fires with External Burning; 24th Symposium (International) on Combustion," The Combustion Institute, pp. 1729–1735, 1992.

23. Hadjisophocleous, G. V., Lougheed, G. D., and Cao, S., "Numerical Study of the Effectiveness of Atrium Smoke Exhaust Systems," ASHRAE Transactions 104, 1999.

24. Hagglund, B., Jansson, R., and Nireus, K., *Smoke Filling Experiments in a 6×6×6 Meter Enclosure,* FOA Rapport C20585-06, Forsavrets Forskningsanstalt, Sweden, September 1985.

25. Hansell, G. O. and Morgan, H. P., Design Approaches for Smoke Control in Atrium Buildings, BRE 258, Borehamwood, UK; Building Research Establishment, 1994.

26. Hansell, G. O., Morgan, H., and Marshall, N. R., "Smoke Flow Experiments in a Model Atrium," BRE Occasional Paper, July 1993.

27. Hay, G. E., *Vector and Tensor Analysis,* Dover, New York, 1953.

28. Heskestad, G., "Determination of Gas Venting Geometry and Capacity of Air Pollution Control System at Factory Mutual Research Center," FMRC Ser. No. 20581, Fire Mutual Research Corp., Norwood, MA, November 1972.

29. Heskestad, G., *Engineering Relations for Fire Plumes,* SFPE TR 82-8, Boston, Society of Fire Protection Engineers, 1982.

30. Heskestad, G., "Fire Plumes, Flame Height, and Air Entrainment," Chapter 2-1, *SFPE Handbook of Fire Protection Engineering,* DiNenno et al. editors, National Fire Protection Association, Quincy, MA, 2002.

31. Heskestad, G., *Inflow of Air Required at Wall and Ceiling Apertures to Prevent Escape of Fire Smoke,* FMRC J.I. 0Q4E4.RU, Factory Mutual Research Corporation, July 1989.

32. Heskestad, G., "Letter to the Editor," *Fire Technology,* 27, 2, pp. 174–185, May 1991.

33. Heskestad, G., Sprinkler/Hot Layer Interaction, NIST-GCR-91-590, National Institute of Standards, Gaithersburg, MD, 1991.

34. Heskestad, G. and Bill, R. G., Jr., "Modeling of Thermal Responsiveness of Automatic Sprinklers," *Fire Safety Science — Proceedings of the Second International Symposium,* Hemisphere Publishing Corporation, New York, p. 603, 1989.

35. Heskestad, G. and Delichatsios, M. A., *Environments of Fire Detectors—Phase 1 Effect of Fire Size, Ceiling Height and Materials.* Volume I — Measurements (NBS-GCR-77-86), Volume II - Analysis (NBS-GCR-77-95), National Bureau of Standards (now National Institute of Standards and Technology), Gaithersburg, MD, 1977.

36. Heskestad, G. and Delichatsios, M. A., "The Initial Convective Flow in Fire," Seventeenth Symposium (International) on Combustion, the Combustion Institute, Pittsburgh, PA, p. 1113, 1979.

37. Heskestad, G. and Delichatsios, M. A., "Update: The Initial Convective Flow in Fire," *Fire Safety Journal,* 15, p. 471, 1989.

38. Heskestad, G. and Hill, J. P., "Experimental Fire in Multiroom/Corridor Enclosures," FMRC J.I. 0J2N8.RU, Factory Mutual Research Corporation, October 1985.

--`,,```-`-`,,`,,`,`,,`---

Copyright National Fire Protection Association
Provided by IHS under license with NFPA
No reproduction or networking permitted without license from IHS Not for Resale

39. Hinkley, P. L., Hansell, G. O., Marshall, N. R., and Harrison, R., "Experiments at the Multifunctioneel Training Centrum, Ghent, on the Interaction Between Sprinklers and Smoke Venting," Building Research Establishment Report, 1992.

40. Hirsch, C., *Numerical Computation of Internal and External Flows, Vol. 1: Fundamentals of Numerical Discretization,* Wiley, New York, 1988.

41. Hirsch, C., *Numerical Computation of Internal and External Flows, Vol. 2: Computational Methods for Inviscid and Viscous Flows,* Wiley, New York, 1990.

42. Hoffmann, K. A., *Computational Fluid Dynamics for Engineers, Engineering Education System,* Austin, TX, 1989.

43. Kanury, A. M., "Ignition of Liquid Fuels," *SFPE Handbook of Fire Protection Engineering,* 2nd ed., P. J. DiNenno (ed.), National Fire Protection Association, Quincy, MA, 1995.

44. Klote, J. and Milke, J., "Principles of Smoke Management," ASHRAE/SFPE, Atlanta, GA, 2002.

45. Kumar, S., *Mathematical Modelling of Natural Convection in Fire — A State of the Art Review of the Field Modelling of Variable Density Turbulent Flow, Fire and Materials,* Vol. 7, No. 1, pp. 1–24, 1983.

46. Law, M., "A Note on Smoke Plumes from Fires in Multi-Level Shopping Malls," *Fire Safety Journal,* 10, p. 197, 1986.

47. Law, M., "Air Supported Structures: Fire and Smoke Hazards," *Fire Prevention,* 148, 1982.

48. Lougheed, G. D., "Expected Size of Shielded Fires in Sprinklered Office Buildings," ASHRAE Transactions, Volume 103, Part 1, 1997, p. 395.

49. Lougheed, G. D. and Hadjisophocleous, G. V., "Investigation of Atrium Smoke Exhaust Effectiveness," ASHRAE Transactions 103, pp. 1–15, 1997.

50. Lougheed, G. D., Hadjisophocleous, G. V., McCartney, C., and Taber, B. C., "Large-Scale Physical Model Studies for an Atrium Smoke Exhaust System," ASHRAE Transactions 104, 1999.

51. Lougheed, G. D., Mawhinney, J. R., and O'Neill, J., "Full-Scale Fire Tests and the Development of Design Criteria for Sprinkler Protection of Mobile Shelving Units," *Fire Technology,* 30, pp. 98–133, 1994.

52. Madrzykowski, D. and Vettori, R., "A Sprinkler Fire Suppression Algorithm," *Journal of Fire Protection Engineering,* 4, pp. 151–164, 1992.

53. Markatos, N. C., *The Mathematical Modelling of Turbulent Flows, Applied Mathematical Modeling,* Vol. 10, No. 3, pp. 190–220, 1986.

54A. McGrattan, K. B. et al., *Fire Dynamics Simulator – Technical Reference Guide,* NISTIR 6467, National Institute of Standards and Technology, Gaithersburg, MD, 2000.

54B. McGrattan, K. B. and Forney, G. P., *Fire Dynamics Simulator – User's Manual,* NISTIR 6469, National Institute of Standards and Technology, Gaithersburg, MD, 2000.

55. Milke, J. A. and Mowrer, F. W., "An Algorithm for the Design Analysis of Atrium Smoke Management Systems," FP93-04, Department of Fire Protection Engineering, University of Maryland at College Park, May 1993.

56. Modak, A. T. and Alpert, R. L., *Influence of Enclosures on Fire Growth — Volume I: Guide to Test Data,* FMRC 0A0R2.BU-8, Factory Mutual Research, Norwood, MA, 1978.

57. Morgan, H. P., "Comments on A Note on Smoke Plumes from Fires in Multi-Level Shopping Malls," *Fire Safety Journal,* 12, p. 83, 1987.

58. Morgan, H. P., *Smoke Control Methods in Enclosed Shopping Complexes of One or More Storeys: A Design Summary,* Building Research Establishment, 1979.

59. Morgan, H. P. and Hansell, G. O., "Fire Sizes and Sprinkler Effectiveness in Offices-Implications for Smoke Control Design," *Fire Safety Journal,* volume 8, no. 3, pp. 187–198, 1985.

60. Morgan, H. P. and Marshall, N. R., *Smoke Control Measures in Covered Two-Story Shopping Malls Having Balconies and Pedestrian Walkways,* BRE CP 11/79, Borehamwood, 1979.

61. Morton, B. R., Taylor, Sir Geoffrey, and Turner, J. S., "Turbulent Gravitational Convection from Maintained and Instantaneous Sources," Proc. Royal Society A 234, 1–23, 1956.

62. Mowrer, F. W. and Williamson, R. B., "Estimating Room Temperatures from Fires along Walls and in Corners," *Fire Technology 23,* 2, pp. 133–145, May 1987.

63. Mudan, K. S. and Croce, P. A., "Fire Hazard Calculations for Large Open Hydrocarbon Fires," *SFPE Handbook of Fire Protection Engineering,* National Fire Protection Association, Quincy, MA, 1988.

64. Mulholland, G., Section 1/Chapter 25 "Smoke Production and Properties," *SFPE Handbook of Fire Protection Engineering,* National Fire Protection Association, Quincy, MA, 1988.

65. Mulholland, G., Handa, T., Sugawa, O., and Yamamoto, H., "Smoke Filling in an Enclosure," *Fire Science and Technology,* 1, p. 1, 1981.

66. Mulholland, G., Handa, T., Sugawa, O., and Yamamoto, H., "Smoke Filling in an Enclosure," Paper 81-HT-8, the American Society of Mechanical Engineers, 1981.

67. Nelson, H. E., *An Engineering Analysis of the Early Stages of Fire Development—The Fire at the Du Pont Plaza Hotel and Casino-December 31, 1986,* Report NBSIR 87-3560, 1987.

68. Nelson, H. E. and Forssell, E. W., "Use of Small-Scale Test Data in Hazard Analysis," Proceedings of the 4th International Symposium of IAFSS, Ottawa, Canada, 1994.

69. Nelson, H. E. and Mowrer, F., "Emergency Movement," Chapter 3-14, *SFPE Handbook of Fire Protection Engineering,* DiNenno et al. editors, National Fire Protection Association, Quincy, MA, 2002.

70. Newman, J. S. and Hill, J. P., "Assessment of Exposure Fire Hazard to Cable Trays," NP-1675 Research Project 1165-1-1, Prepared for Electric Power Research Institute by Factory Mutual Research Corporation, January 1981.

70A. Nii, Nitta, Harada, and Yamaguchi, "Air Entrainment into Mechanical Smoke Vent on Ceiling," *Fire Safety Science,* Proceedings of the Seventh International Symposium, pp. 729–740, 2003.

71. Nowler, S. P., *Enclosure Environment Characterization Testing for the Base Line Validation of Computer Fire Simulation Codes,* NUREG/CR-4681, SAND 86-1296, Sandia National Laboratories, March 1987.

72. Peacock, R. D. and Babrauskas, V., "Analyses of Large-Scale Fire Test Data," *Fire Safety Journal,* 17, pp. 387-414.

73. Peacock, R. D., Davis, S., and Babrauskas, V., "Data for Room Fire Model Comparisons," *Journal of the National Institute of Standards and Technology,* 96, 4, July 1991.

74. Personal Communication, G. D. Lougheed, National Research Council of Canada, March 20, 1991.

75. Purser, D. A., "Toxicity Assessment of Combustion Products," *SFPE Handbook of Fire Protection Engineering,* National Fire Protection Association, Quincy, MA, 2002.

76. Quintiere, J. G., *Fire Safety Journal,* 1, 15, 1989.

77. Quintiere, J. G., McCaffrey, B. J., and Kashiwagi, T., *Combustion Science and Technology,* 18, 1978.

--`,,,```-`-`,,`,,`,`,,`---

Copyright National Fire Protection Association
Provided by IHS under license with NFPA
No reproduction or networking permitted without license from IHS

Not for Resale

78. Sako, S. and Hasemi, Y., "Response Time of Automatic Sprinklers Below a Confined Ceiling," Fire Safety Science-Proceedings of the Second International Symposium, Hemisphere Publishing Corporation, New York, p. 613, 1989.

79. Schetz, J. A., *Boundary Layer Analysis,* Prentice Hall, Englewood Cliffs, NJ, 1993.

80. Schlichting, H., *Boundary Layer Theory,* 4th ed., Kestin, J. translator, McGraw, New York, 1960.

81. Sherman, F. S., *Viscous Flow,* McGraw, New York, 1990.

82. Soderbom, J., "Smoke Spread Experiments in Large Rooms. Experimental Results and Numerical Simulations," Statens Provningsanstalt, SR Report 1992:52, Swedish National Testing and Research Institute, Boras, Sweden, 1992.

83. Spratt, D. and Heselden, A. J. M., "Efficient Extraction of Smoke from a Thin Layer Under a Ceiling," Fire Research Note No. 1001, February 1974.

84. Spratt, D. and Heselden, A. J. M., "Efficient Extraction of Smoke from a Thin Layer Under a Ceiling," UK Joint Fire Research Organization, Fire Research Note No. 1001, 1994.

85. Steckler, K. D., Baum, H. R., and Quintiere, J. G., 21st Symposium (Int.) on Combustion, pp. 143–149, 1986.

86. Tewarson, A., "Generation of Heat and Chemical Compounds in Fires," *SFPE Handbook of Fire Protection Engineering,* 2nd ed., P. J. DiNenno (ed.), National Fire Protection Association, Quincy, MA, 2002.

87. Thomas, P. H., "On the Upward Movement of Smoke and Related Shopping Mall Problems," *Fire Safety Journal,* 12, p. 191, 1987.

88. Thomas, P. H., Heselden, J. M., and Law, M., "Fully-Developed Compartment Fires — Two Kinds of Behavior," Fire Research Technical Paper No. 18.

89. Thomas, P. H., Hinckley, P. L., Theobald, C. R., and Sims, D. L., "Investigations into the Flow of Hot Gases in Roof Venting," Fire Research Technical Papers No. 7, HMSO, London, 1963.

90. Tien, C. L., Lee, K. Y., and Stretton, A. J., "Radiation Heat Transfer," *SFPE Handbook of Fire Protection Engineering,* 2nd ed., P. J. DiNenno (ed.), National Fire Protection Association, Quincy, MA, 2002.

91. Turner, J. S., *Buoyancy Effects in Fluids,* Cambridge University Press, Cambridge, 1973.

92. Walton, W. D. and Notorianni, "A Comparison of Ceiling Jet Temperatures Measured in an Aircraft Hangar Test Fire with Temperatures Predicted by the DETECT and LAVENT Computer Models," NISTIR (Draft), Building and Fire Research Laboratory, National Institute of Standards and Technology, August 1992.

93. Welty, J. R., Wicks, C. E., and Wilson, R. E., *Fundamentals of Momentum, Heat and Mass Transfer,* John Wiley & Sons, New York, 1976.

94. White, F. M. *Viscous Fluid Flow,* McGraw, New York, 1974.

95. Yamana, T. and Tanaka, T., "Smoke Control in Large Scale Spaces," *Fire Science and Technology,* 5, p. 41, 1985.

96. Yamana, T., and Tanaka, T. "Smoke Control in Large Scale Spaces — Part 2: Smoke Control in Large Scale Spaces," *Fire Science and Technology,* 5, 1, pp. 41–54, 1985.

97. Zukoski, E. E., Kubota, T., and Cetegen, B., "Entrainment in Fire Plumes," *Fire Safety Journal,* 3, pp. 107–121, 1980/1981.

J.3 References for Extracts. The following documents are listed here to provide reference information, including title and edition, for extracts given throughout the nonmandatory sections of this standard as indicated by a reference in brackets [ ] following a section or paragraph. These documents are not a part of the requirements of this document unless also listed in Chapter 2 for other reasons.

NFPA *101®*, *Life Safety Code®*, 2003 edition.

NFPA 318, *Standard for the Protection of Semiconductor Fabrication Facilities*, 2002 edition.

Copyright National Fire Protection Association
Provided by IHS under license with NFPA
No reproduction or networking permitted without license from IHS
Not for Resale

Index

© 2005 National Fire Protection Association. All Rights Reserved.

The copyright in this index is separate and distinct from the copyright in the document that it indexes. The licensing provisions set forth for the document are not applicable to this index. This index may not be reproduced in whole or in part by any means without the express written permission of NFPA.

-A-

Acceptance testing 8.1.1, 8.1.2, 8.3, A.8.1.1
Activation 4.5.1, 7.2, A.7.2
  Automatic 4.5.1.1
  Manual 4.5.4
  Response time for 7.3.4
  Sequencing 7.3.5
Air, makeup ..... *see* Makeup air
Airflow, opposed ..... 4.4.2.1(3), 4.4.2.1.2, 4.4.2.2.2, 5.5, 8.3.5.2
Alarm systems, testing 8.3.4.5, A.8.3.4.5
Algebraic equations ..... *see* Calculation procedures
Approved (definition) 3.2.1, A.3.2.1
Areas of refuge ..... 4.1.2(1), 4.2.1(7)
Atrium (definition) 3.3.1
Authority having jurisdiction (definition) 3.2.2, A.3.2.2
Axisymmetric plumes ..... *see* Plumes

-B-

Balcony spill plumes ..... *see* Plumes
Barriers ..... *see* Smoke Barriers

-C-

Calculation procedures ..... Chap. 5, Chap. 6, Annex D
  Comparison of equations ..... Annex I
  Complex geometries 5.4, A.5.4
  Cross-sectional geometries, varying 5.4, A.5.4
  Design approaches 5.1, A.5.1
    Algebraic equations 5.1.2, A.5.1.2
    Compartment fire models 4.3.2, 5.1.3
    Scale modeling 5.1.1, A.5.1
  Design fire 5.2
    Steady fire ..... 5.2.2(1), 5.2.3
    Unsteady fire ..... 5.2.2(2), 5.2.4
  Exhaust inlets, number of 6.3, A.6.3
  Height of first indication of smoke with no smoke exhaust operating 6.1.2, A.6.1.2.1, A.6.1.2.2
  Mass consumption 5.3
  Smoke layer calculations 6.1
  Smoke mass production, rate of 6.2
  Volumetric flow rate 6.4, A.6.4
Ceiling jets (definition) 3.3.2, A.3.3.2
CFD (computational fluid dynamics) models ..... 4.3.2, 5.1.3, A.5.1.3, Annex F
Communicating spaces ..... 4.1.1, 4.2, 4.4.2, A.4.4.2.1(2), A.4.4.2.2
  Balcony spill plumes 6.2.2, A.6.2.2.1, A.6.2.2.3
  Definition 3.3.3, A.3.3.3
  Smoke spread from, management of 4.4.2.2, 5.5.1, A.4.4.2.2
  Smoke spread to, management of ..... 4.4.2.1, 5.5.2, A.4.4.2.1(2)
Compartment fire models 4.3.2, 5.1.3, A.5.1.3
Computational fluid dynamic (CFD) models ..... *see* CFD (computational fluid dynamics) models
Control systems 7.3, A.7.3
Covered malls (definition) 3.3.4

-D-

Dampers, smoke ..... *see* Smoke dampers
Definitions ..... Chap. 3
Design fires 5.2
Design fundamentals ..... Chap. 4
  Additional objectives ..... Annex G
  Approaches 4.3, A.4.3.1
  Basis 4.2
  Communicating spaces ..... 4.4.2, A.4.4.2.1(2), A.4.4.2.2
  Detection systems ..... 4.5.1.2, 4.5.2.2(1)
  Documentation ..... Chap. 9
  Limitations 4.4.1, A.4.4.1.1
  Makeup air 4.6, A.4.6
  Objectives 4.1, A.4.1.2
  Operating conditions 4.7
  Smoke management system operation 4.5
  Smoke stratification 4.9, A.4.9
  Weather data 4.8, A.4.8
Detection systems
  Activation C.2
  Design ..... 4.5.1.2, 4.5.2.2(1), 4.9, A.4.9
  Response time 7.3.4
  Testing 8.3.4.5, A.8.3.4.5
Detectors, beam-type 4.5.1.2, 4.9, A.4.9
Documentation
  Design ..... Chap. 9
  Testing 8.3.6, 8.3.8.2
Draft curtains 6.2.2.4
  Definition 3.3.5
Ducts ..... 7.5.1 to 7.5.3

-E-

Egress analysis ..... 4.2.1(6), 4.3, 4.5.3.3, A.4.3.1, G.1.1
Electrical services 7.4, A.7.4
End-to-end verification A.7.3.6
  Definition 3.3.6
Environment, tenable ..... *see* Tenable environment
Equations, algebraic ..... *see* Calculation procedures
Equipment ..... Chap. 7
Equivalency to standard 1.4
Exhaust, smoke ..... *see* Smoke exhaust
Exhaust fans ..... *see* Fans, exhaust

-F-

Fans, exhaust 7.5.2
  Activation 7.2, 7.3.5, A.7.2
  Exhaust inlets 6.3, A.6.3
Fans, supply 7.2, A.7.2
Fire plumes ..... *see* Plumes
Fires
  Design 5.2
  Fuel limited (definition) 3.3.7.1
  Heat release rates ..... *see* Heat release rate data
  Pool B.5.1
  Sprinkler controlled (definition) ..... 3.3.7.2; *see also* Sprinkler systems
  Steady ..... 5.2.2(1), 5.2.3, 5.2.4.3, 5.3.1, B.3
    Definition 3.3.7.3
  t-squared (t^2) ..... 5.2.4.1(2), 5.2.4.2, 5.3.2, B.3, Annex C
    Definition 3.3.7.4
  Unsteady ..... 5.2.2(2), 5.2.4, 6.1.2.2, A.6.1.2.2
    Definition 3.3.7.5
  Ventilation limited 6.2.3.1, A.6.2.3.1
    Definition 3.3.7.6

Copyright National Fire Protection Association
Provided by IHS under license with NFPA
No reproduction or networking permitted without license from IHS
Not for Resale

First indication of smoke
Definition 3.3.8, A.3.3.8
With no indication of smoke exhaust operating 6.1.2, A.6.1.2.1, A.6.1.2.2
Flame spread B.6.5

-G-

Gravity smoke venting ..... 4.3.1(4), 4.3.1(5)
Growth time 5.2.4.2.1, 5.2.4.2.2, 5.3.2
Definition 3.3.9

-H-

Heating, ventilating, and air conditioning (HVAC) systems ..... 4.5.2.2(2), A.7.2, A.7.3
Heat release rate data ..... Annex B
Separation distance 5.2.5.4
Steady fires 5.2.3.1, 6.1.2.1, A.6.1.2.1
t-squared fires ..... Annex C
Unsteady fires 5.2.4.2.1, 5.2.4.4, A.5.2.4.4

-I-

Interfaces, smoke layer ..... *see* Smoke layer interfaces

-L-

Labeled (definition) 3.2.3
Large-volume spaces (definition) 3.3.10
Layers, smoke ..... *see* Smoke layers
Listed (definition) 3.2.4, A.3.2.4

-M-

Maintenance 8.3.7, 8.4.1, 9.3, A.8.4.1
Makeup air ..... 4.6, 7.2, 8.4.3(2), A.4.6, A.7.2
Manual control 4.5.4, 7.3.7, A.7.3.7
Manuals and instructions 8.3.7, 9.3
Mass consumption 5.3
Materials 7.5
Means of egress ..... *see* Egress analysis
Mechanical smoke exhaust capacity ..... 4.3.1(2), 4.3.1(3), 4.6.2, A.4.3.1(2)

-N-

Natural venting ..... 4.3.1(1), 4.4.1.2

-O-

Occupancies, type and location of ..... 4.2.1(4)
Operation, smoke management system 4.5
Conditions for 4.7, 4.8, A.4.8
Manual for 8.3.7, 9.3
Self-test, weekly 7.3.8
Opposed airflow ..... *see* Airflow, opposed
Owner's manuals and instructions 8.3.7

-P-

Periodic testing 8.1.1, 8.4, A.8.1.1, A.8.4.1, A.8.4.6
Plugholing 6.3.3, A.6.3.3
Definition 3.3.11
Plumes
Average temperature 6.2.5, A.6.2.5
Axisymmetric 6.2.1, 6.2.4, A.4.4.2.2, A.6.2.1.1, A.6.2.4
Definition 3.3.12.1, A.3.3.12.1
Balcony spill 6.2.2, A.4.4.2.2, A.6.2.2.1, A.6.2.2.3
Definition 3.3.12.2, A.3.3.12.2
Definition 3.3.12, A.3.3.12
Makeup air in contact with 4.6.4, A.4.6.4
Window 6.2.3, A.6.2.3
Definition 3.3.12.3
Pressure differences 4.4.2.1.1, 8.4.3
Purpose of standard 1.2, A.1.2.1

-R-

References ..... Chap. 2, Annex J
Retroactivity of standard 1.3

-S-

Scale modeling 4.3.2, 5.1.1, 5.6, A.5.1, A.5.6
Scope of standard 1.1, A.1.1
Separated spaces (definition) 3.3.13
Separation distance, design fires 5.2.5, A.5.2.5
Shall (definition) 3.2.5
Should (definition) 3.2.6
Smoke
Definition 3.3.14
Mass production, rate of 6.2
Stratification of ..... 4.9, A.4.9, Annex H
Smoke barriers ..... 4.2.1(5), 4.4.2.1(2), 4.4.2.1.1, A.4.4.2.1(2)
Definition 3.3.15, A.3.3.15
Openings in ..... 8.4.3(1)
Smoke dampers 7.1, 7.3.5, 7.5.3
Definition 3.3.16
Smoke detectors ..... *see* Detectors
Smoke exhaust ..... 4.4.2.2.2, 5.5.2, 8.4.3(3); *see also* Mechanical smoke exhaust capacity; Venting
Communicating spaces 5.5.1
Inlets, number of 6.3, A.6.3
Smoke layers
Calculations 6.1
Definition 3.3.17, A.3.3.17
Design smoke layer depth 4.4.1.1, A.4.4.1.1
Smoke layer interfaces
Communicating spaces
Smoke spread from ..... 4.4.2.1, A.4.4.2.1(2)
Smoke spread to ..... 4.4.2.1(1), 5.5.2
Definition 3.3.18, A.3.3.18
Design height ..... 4.1.2(2), 4.3, A.4.3.1
Height at first indication of smoke, calculations 6.1.2, A.6.1.2.1, A.6.1.2.2
Makeup air supply points 4.6.1
Smoke management system (definition) 3.3.19
Sprinkler controlled fires (definition) 3.3.7.2
Sprinkler systems ..... 5.2.4.4(2), A.4.4.2.2, A.5.2.1, A.5.2.4.4
Stack effect A.4.8
Definition 3.3.20
Standard (definition) 3.2.7
Standby power 8.3.4.2, A.8.3.4.2
Startup, system 4.5.2, 7.3.4
Steady fires ..... *see* Fires
Suppression systems, automatic .... A.5.2.1; *see also* Sprinkler systems

-T-

Temperature
Maximum, operation at 4.7
Outdoor temperature, effect of 4.8, A.4.8
Tenable environment G.1.2
Definition 3.3.21
Maintenance of ..... 4.1.2(1), 4.5.3.2
Tenability thresholds reached, exiting prior to 4.5.3.1, 4.5.3.3
Testing ..... Chap. 8
Acceptance 8.1.1, 8.1.2, 8.3, A.8.1.1, A.8.3
Component system 8.1.1, 8.2, A.8.1.1, A.8.2
Documentation 8.3.6, 8.3.8.2
Modifications, after 8.3.8
Periodic 7.3.8, 8.1.1, 8.4, A.8.1.1, A.8.4.1, A.8.4.6
Transition zone (definition) 3.3.22, A.3.3.22
***t*-squared (t^2) fires** ..... *see* Fires

-U-

Unsteady fires ..... *see* Fires

Copyright National Fire Protection Association
Provided by IHS under license with NFPA
No reproduction or networking permitted without license from IHS
Not for Resale

-V-

Ventilation limited fires ..... *see* Fires
Venting
Gravity smoke ..... 4.3.1(4), 4.3.1(5)
Mechanical ..... *see* Mechanical smoke exhaust capacity
Natural ..... 4.3.1(1), 4.4.1.2

-W-

Weather data 4.8, A.4.8
Window plumes ..... *see* Plumes

-Z-

Zone models ..... 4.3.2, 5.1.3, A.5.1.3, A.5.6, Annex E

--`,,,```-`-`,,`,,`,`,,`---

Copyright National Fire Protection Association
Provided by IHS under license with NFPA
No reproduction or networking permitted without license from IHS
Not for Resale

Sequence of Events Leading to Publication of an NFPA Committee Document

Call goes out for proposals to amend existing document or for recommendations on new document.

▼

Committee meets to act on proposals, to develop its own proposals, and to prepare its report.

▼

Committee votes on proposals by letter ballot. If two-thirds approve, report goes forward. Lacking two-thirds approval, report returns to committee.

▼

Report — *Report on Proposals* (ROP) — is published for public review and comment.

▼

Committee meets to act on each public comment received.

▼

Committee votes on comments by letter ballot. If two-thirds approve, supplementary report goes forward. Lacking two-thirds approval, supplementary report returns to committee.

▼

Supplementary report — *Report on Comments* (ROC) — is published for public review.

▼

NFPA membership meets (Annual or Fall Meeting) and acts on committee report (ROP or ROC).

▼

Committee votes on any amendments to report approved at NFPA Annual or Fall Meeting.

▼

Appeals to Standards Council on Association action must be filed within 20 days of the NFPA Annual or Fall Meeting.

▼

Standards Council decides, based on all evidence, whether or not to issue standard or to take other action, including upholding any appeals.

Committee Membership Classifications

The following classifications apply to Technical Committee members and represent their principal interest in the activity of the committee.

M *Manufacturer:* A representative of a maker or marketer of a product, assembly, or system, or portion thereof, that is affected by the standard.

U *User:* A representative of an entity that is subject to the provisions of the standard or that voluntarily uses the standard.

I/M *Installer/Maintainer:* A representative of an entity that is in the business of installing or maintaining a product, assembly, or system affected by the standard.

L *Labor:* A labor representative or employee concerned with safety in the workplace.

R/T *Applied Research/Testing Laboratory:* A representative of an independent testing laboratory or independent applied research organization that promulgates and/or enforces standards.

E *Enforcing Authority:* A representative of an agency or an organization that promulgates and/or enforces standards.

I *Insurance:* A representative of an insurance company, broker, agent, bureau, or inspection agency.

C *Consumer:* A person who is, or represents, the ultimate purchaser of a product, system, or service affected by the standard, but who is not included in the *User* classification.

SE *Special Expert:* A person not representing any of the previous classifications, but who has a special expertise in the scope of the standard or portion thereof.

NOTES:

1. "Standard" connotes code, standard, recommended practice, or guide.
2. A representative includes an employee.
3. While these classifications will be used by the Standards Council to achieve a balance for Technical Committees, the Standards Council may determine that new classifications of members or unique interests need representation in order to foster the best possible committee deliberations on any project. In this connection, the Standards Council may make such appointments as it seems appropriate in the public interest, such as the classification of "Utilities" in the National Electrical Code Committee.
4. Representatives of subsidiaries of any group are generally considered to have the same classification as the parent organization.

Copyright National Fire Protection Association
Provided by IHS under license with NFPA
No reproduction or networking permitted without license from IHS
Not for Resale

NFPA Technical Committee Document Proposal Form

Note: All proposals must be received by 5:00 p.m. EST/EDST on the published proposal closing date.

For further information on the standards-making process, please contact Codes and Standards Administration at 617-984-7249. For technical assistance, please call NFPA at 617-770-3000.

FOR OFFICE USE ONLY
Log #: _____
Date Rec'd: _____

Please indicate in which format you wish to receive your ROP/ROC: ☐ **CD ROM** ☐ **paper** ☐ **download**
(Note: In choosing the download option you intend to view the ROP/ROC from our Website. No copy will be sent to you.)

Date 12/18/02 **Name** John B. Smith **Telephone** 617-555-1212
Company _____
Address 9 Seattle St. **City** Seattle **State** WA **Zip** 02255
Please indicate organization represented (if any) Fire Marshals Assn. of North America

1. **a) NFPA Document Title** National Fire Alarm Code
   b) NFPA No. & Edition NFPA 72, 2002 ed. **c) Section/Paragraph** 4.4.7.1.1

2. **Proposal Recommends:** *(check one)* ☐ **new text** ☐ **revised text** ☒ **deleted text**

3. **Proposal.** *(Include proposed new or revised wording, or identification of wording to be deleted.)* Note: Proposed text should be in legislative format, that is, use underscore to denote wording to be inserted (inserted wording) and strike-through to denote wording to be deleted (~~deleted wording~~). Delete exception.

4. **Statement of Problem and Substantiation for Proposal.** Note: State the problem that will be resolved by your recommendation. Give the specific reason for your proposal including copies of tests, research papers, fire experience, etc. If more than 200 words, it may be abstracted for publication. A properly installed and maintained system should be free of ground faults. The occurrence of one or more ground faults should be required to cause a "trouble" signal because it indicates a condition that could contribute to future malfunction of the system. Ground fault protection has been widely available on these systems for years and its cost is negligible. Requiring it on all systems will promote better installations, maintenance and reliability.

5. ☒ **This Proposal is Original Material.** Note: Original material is considered to be the submitter's own idea based on or as a result of his/her own experience, thought, or research and, to the best of his/her knowledge, is not copied from another source.

   ☐ **This Proposal is Not Original Material; Its Source** ***(if known)*** **is as Follows:** _____

Sample

I hereby grant the NFPA all and full rights in copyright to this proposal, and I understand that I acquire no rights in any publication of NFPA in which this proposal in this or another similar or analogous form is used.

Signature ***(Required)*** John B. Smith

PLEASE USE SEPARATE FORM FOR EACH PROPOSAL • NFPA FAX (617) 770-3500

Mail to: Secretary, Standards Council • NFPA • 1 Batterymarch Park • PO Box 9101 • Quincy, MA 02269-9101

Copyright National Fire Protection Association
Provided by IHS under license with NFPA
No reproduction or networking permitted without license from IHS
Not for Resale

NFPA Technical Committee Document Proposal Form

Note: All proposals must be received by 5:00 p.m. EST/EDST on the published proposal closing date.

For further information on the standards-making process, please contact Codes and Standards Administration at 617-984-7249. For technical assistance, please call NFPA at 617-770-3000.

FOR OFFICE USE ONLY
Log #: _____
Date Rec'd: _____

Please indicate in which format you wish to receive your ROP/ROC: ☐ **CD ROM** ☐ **paper** ☐ **download**
(Note: In choosing the download option you intend to view the ROP/ROC from our Website. No copy will be sent to you.)

Date _____ **Name** _____ **Telephone** _____
Company _____
Address _____ **City** _____ **State** _____ **Zip** _____
Please indicate organization represented (if any) _____

1. **a) NFPA Document Title** _____
   b) NFPA No. & Edition _____ **c) Section/Paragraph** _____

2. **Proposal Recommends:** *(check one)* ☐ **new text** ☐ **revised text** ☐ **deleted text**

3. **Proposal.** *(Include proposed new or revised wording, or identification of wording to be deleted.)* Note: Proposed text should be in legislative format, that is, use underscore to denote wording to be inserted (inserted wording) and strike-through to denote wording to be deleted (~~deleted wording~~). _____

4. **Statement of Problem and Substantiation for Proposal.** Note: State the problem that will be resolved by your recommendation. Give the specific reason for your proposal including copies of tests, research papers, fire experience, etc. If more than 200 words, it may be abstracted for publication. _____

5. ☐ **This Proposal is Original Material.** Note: Original material is considered to be the submitter's own idea based on or as a result of his/her own experience, thought, or research and, to the best of his/her knowledge, is not copied from another source.

   ☐ **This Proposal is Not Original Material; Its Source *(if known)* is as Follows:** _____

I hereby grant the NFPA all and full rights in copyright to this proposal, and I understand that I acquire no rights in any publication of NFPA in which this proposal in this or another similar or analogous form is used.

Signature *(Required)* _____

PLEASE USE SEPARATE FORM FOR EACH PROPOSAL • NFPA FAX (617) 770-3500

Mail to: Secretary, Standards Council • NFPA • 1 Batterymarch Park • PO Box 9101 • Quincy, MA 02269-9101

Copyright National Fire Protection Association
Provided by IHS under license with NFPA
No reproduction or networking permitted without license from IHS
Not for Resale