NFPA 914

Code for Fire Protection of Historic Structures

2007 Edition

NFPA, 1 Batterymarch Park, Quincy, MA 02169-7471
An International Codes and Standards Organization

Copyright National Fire Protection Association
Provided by IHS under license with NFPA
No reproduction or networking permitted without license from IHS

Not for Resale

IMPORTANT NOTICES AND DISCLAIMERS CONCERNING NFPA DOCUMENTS

NOTICE AND DISCLAIMER OF LIABILITY CONCERNING THE USE OF NFPA DOCUMENTS

NFPA codes, standards, recommended practices, and guides, of which the document contained herein is one, are developed through a consensus standards development process approved by the American National Standards Institute. This process brings together volunteers representing varied viewpoints and interests to achieve consensus on fire and other safety issues. While the NFPA administers the process and establishes rules to promote fairness in the development of consensus, it does not independently test, evaluate, or verify the accuracy of any information or the soundness of any judgments contained in its codes and standards.

The NFPA disclaims liability for any personal injury, property or other damages of any nature whatsoever, whether special, indirect, consequential or compensatory, directly or indirectly resulting from the publication, use of, or reliance on this document. The NFPA also makes no guaranty or warranty as to the accuracy or completeness of any information published herein.

In issuing and making this document available, the NFPA is not undertaking to render professional or other services for or on behalf of any person or entity. Nor is the NFPA undertaking to perform any duty owed by any person or entity to someone else. Anyone using this document should rely on his or her own independent judgment or, as appropriate, seek the advice of a competent professional in determining the exercise of reasonable care in any given circumstances.

The NFPA has no power, nor does it undertake, to police or enforce compliance with the contents of this document. Nor does the NFPA list, certify, test or inspect products, designs, or installations for compliance with this document. Any certification or other statement of compliance with the requirements of this document shall not be attributable to the NFPA and is solely the responsibility of the certifier or maker of the statement.

--`,,```,,,,````-`-`,,`,,`,`,,`---

Copyright National Fire Protection Association
Provided by IHS under license with NFPA
No reproduction or networking permitted without license from IHS

Not for Resale

ADDITIONAL NOTICES AND DISCLAIMERS

Updating of NFPA Documents

Users of NFPA codes, standards, recommended practices, and guides should be aware that these documents may be superseded at any time by the issuance of new editions or may be amended from time to time through the issuance of Tentative Interim Amendments. An official NFPA document at any point in time consists of the current edition of the document together with any Tentative Interim Amendments and any Errata then in effect. In order to determine whether a given document is the current edition and whether it has been amended through the issuance of Tentative Interim Amendments or corrected through the issuance of Errata, consult appropriate NFPA publications such as the National Fire Codes® Subscription Service, visit the NFPA website at www.nfpa.org, or contact the NFPA at the address listed below.

Interpretations of NFPA Documents

A statement, written or oral, that is not processed in accordance with Section 6 of the Regulations Governing Committee Projects shall not be considered the official position of NFPA or any of its Committees and shall not be considered to be, nor be relied upon as, a Formal Interpretation.

Patents

The NFPA does not take any position with respect to the validity of any patent rights asserted in connection with any items which are mentioned in or are the subject of NFPA codes, standards, recommended practices, and guides, and the NFPA disclaims liability for the infringement of any patent resulting from the use of or reliance on these documents. Users of these documents are expressly advised that determination of the validity of any such patent rights, and the risk of infringement of such rights, is entirely their own responsibility.

NFPA adheres to applicable policies of the American National Standards Institute with respect to patents. For further information contact the NFPA at the address listed below.

Law and Regulations

Users of these documents should consult applicable federal, state, and local laws and regulations. NFPA does not, by the publication of its codes, standards, recommended practices, and guides, intend to urge action that is not in compliance with applicable laws, and these documents may not be construed as doing so.

Copyrights

This document is copyrighted by the NFPA. It is made available for a wide variety of both public and private uses. These include both use, by reference, in laws and regulations, and use in private self-regulation, standardization, and the promotion of safe practices and methods. By making this document available for use and adoption by public authorities and private users, the NFPA does not waive any rights in copyright to this document.

Use of NFPA documents for regulatory purposes should be accomplished through adoption by reference. The term "adoption by reference" means the citing of title, edition, and publishing information only. Any deletions, additions, and changes desired by the adopting authority should be noted separately in the adopting instrument. In order to assist NFPA in following the uses made of its documents, adopting authorities are requested to notify the NFPA (Attention: Secretary, Standards Council) in writing of such use. For technical assistance and questions concerning adoption of NFPA documents, contact NFPA at the address below.

For Further Information

All questions or other communications relating to NFPA codes, standards, recommended practices, and guides and all requests for information on NFPA procedures governing its codes and standards development process, including information on the procedures for requesting Formal Interpretations, for proposing Tentative Interim Amendments, and for proposing revisions to NFPA documents during regular revision cycles, should be sent to NFPA headquarters, addressed to the attention of the Secretary, Standards Council, NFPA, 1 Batterymarch Park, P.O. Box 9101, Quincy, MA 02269-9101.

For more information about NFPA, visit the NFPA website at www.nfpa.org.

Copyright National Fire Protection Association
Provided by IHS under license with NFPA
No reproduction or networking permitted without license from IHS
Not for Resale

Copyright © 2006 National Fire Protection Association. All Rights Reserved.

NFPA 914

Code for

Fire Protection of Historic Structures

2007 Edition

This edition of NFPA 914, *Code for Fire Protection of Historic Structures*, was prepared by the Technical Committee on Cultural Resources and acted on by NFPA at its June Association Technical Meeting held June 4–8, 2006, in Orlando, FL. It was issued by the Standards Council on July 28, 2006, with an effective date of August 17, 2006, and supersedes all previous editions.

This edition of NFPA 914 was approved as an American National Standard on August 17, 2006.

Origin and Development of NFPA 914

The Technical Committee on Cultural Resources was first organized in 1940 as the Committee on Libraries, Museums, and Historic Buildings. The first committee document, published in 1948, was the manual *Protecting our Heritage: Historic Buildings, Museums, and Libraries.* A second edition of the manual was published in 1970.

The Committee has revised and updated this document from a recommended practice to a code to recognize changes in the state of the art, to make the document more usable, and to reflect the new technology in fire detection and fire extinguishing systems. The Committee approved a request in November 1984 to develop a publication similar to NFPA 913, which was withdrawn in 1997, but its scope of coverage included protection criteria for historic structures for buildings that were to be rehabilitated for new uses. A recommended practice was prepared in draft form for the 1988 Annual Meeting but was not considered by the Committee to be ready for publication. The Committee continued to revise and organize the material, and the document was submitted once again at the 1989 Annual Meeting in Washington, DC, where the first edition was adopted. The original title was *Recommended Practice for Fire Protection in Rehabilitation and Adaptive Reuse of Historic Structures.*

In the early part of 1993, the Committee moved to consolidate the various requirements for churches, museums, and libraries into a common standard. That consolidation was achieved in 1997 with the issuance of NFPA 909, *Standard for the Protection of Cultural Resources, Including Museums, Libraries, Places of Worship, and Historic Properties.* While this new standard was being developed, a further need to deal with the unique properties of historic structures was identified: In many applications, traditional requirements of codes and standards did not provide practical solutions to correcting fire protection deficiencies in historic properties.

Previous editions of NFPA 914 contained somewhat expanded fire protection guidelines, including the need to develop an overall fire protection plan that emphasized management's responsibility in addressing fire protection and the importance of preserving the historic integrity of these irreplaceable artifacts of history and culture. However, the document still did not contain a roadmap to accomplish these goals. The changes made to the document in the 2001 edition were quite substantial in this regard. Among the revisions was the designation of the 2001 edition as a code rather than as a recommended practice. The document gave clear guidance instead of good ideas. Designation as a code also allowed for a document to be adopted by law into a state or local jurisdiction, since it used mandatory language.

Given the unique nature of this document — an attempt to cover the gamut of existing structures with no occupancy change, structures that had been undergoing an adaptive reuse transformation, or those structures that simply had never been regulated before, given the lack of an authoritative document on this subject — the 2001 edition contained both a prescriptive approach as well as a performance-based approach to finding solutions to the life safety and fire safety problems in historic structures. In both cases, NFPA 914 maintained the importance of preventing or minimizing the intrusion of fire protection systems or solutions so as not to destroy the fabric or significance of the structure.

Copyright National Fire Protection Association
Provided by IHS under license with NFPA
No reproduction or networking permitted without license from IHS
Not for Resale

Also of significance in the 2001 edition was the addition of a process whereby those individuals responsible for managing the fire protection plan for a building could be considered part of the overall fire protection plan for the building. This approach allowed specific direction to be given for needs assessment, both from the fire protection management standpoint as well as from the historic significance standpoint. This process allows the responsible parties to develop and implement a plan that encompasses all aspects of the historic structure or site so that it can be preserved for future generations. A major addition to the 2001 edition that provided guidance for carrying out this approach was found in Chapter 10, Management Operational Systems.

The 2007 edition has undergone a major reorganization to come into further compliance with the *Manual of Style for NFPA Technical Committee Documents* and to better correlate with the 2005 edition of NFPA 909, *Code for the Protection of Cultural Resource Properties — Museums, Libraries, and Places of Worship*. A new chapter on security and a new annex that illustrates compliance alternatives have been added. Technical revisions have also been made pertaining to life safety performance criteria; temporary enclosures; deficiencies discovered during compliance audits; documentation of modifications to prescriptive requirements; housekeeping practices; hot work; cabling; commercial cooking and food service operations; additions, alterations, and repairs; roofing; plumbing; temporary wiring; fire doors; inspection, testing, and maintenance of fire protection systems; and the use of combustible packing materials. Revisions have also been made regarding the type of automatic sprinklers to be used in historic structures properties, and information added on management operations systems and emergency response plans.

--`,,```,,,,````-`-`,,`,,`,`,,`---

Copyright National Fire Protection Association
Provided by IHS under license with NFPA
No reproduction or networking permitted without license from IHS

Not for Resale

Technical Committee on Cultural Resources

Deborah L. Freeland, *Chair*
Arthur J. Gallagher & Company, CA [I]

William Jackson, *Secretary*
National Library of Scotland, Scotland [U]

Nicholas Artim, Fire-Safety Network, VT [SE]
Robert D. Barnes, The RJA Group, Inc., IL [SE]
Donald P. Bliss, National Infrastructure Institute, NH [RT]
Stephen E. Bush, Winchester, VA [SE]
Steven Di Pilla, ACE USA/ESIS Risk Control Services, NJ [I]
Rep. TC on Means of Egress
Laura E. Doyle, U.S. General Services Administration, DC [U]
Wilbur Faulk, Contemporary Services Corporation, CA [SE]
Robert F. Fisher, FM Global, OH [I]
Rep. FM Global
Bert Geddy, City of Williamsburg, VA [E]
Cindy Greczek, Colonial Williamsburg Foundation, VA [U]
Brian E. Heyman, State of California, CA [E]
Robert Howe, Vermont Department of Labor & Industry, VT [E]
Rep. National Association of State Fire Marshals
Stewart Kidd, Loss Prevention Consultancy, Ltd., United Kingdom [SE]
Wolfgang Kippes, Schloss Schoenbrunn, Austria [U]
George A. Krabbe, Automatic Fire Controls Inc., AZ [IM]
Rep. Halon Alternatives Research Corporation
John W. McCormick, Code Consultants, Inc., MO [SE]
John F. McLean, Willis, NY [I]
Wayne D. Moore, Hughes Associates, Inc., RI [M]
Rep. Automatic Fire Alarm Association, Inc.
Steven M. Peterson, U.S. Department of the Interior, AK [E]
Steven Rocklin, New York Department of State, NY [E]
Charles A. Sabah, C. A. Sabah & Company Inc., NV [M]
Rep. Fire Suppression Systems Association
Woodrow W. Stratton, U.S. Department of Homeland Security, MD [U]
Peter W. Thomas, Tyco Fire & Building Products, RI [M]
Rep. National Fire Sprinkler Association
Don L. Tolliver, Silver Lake, OH [U]
Rep. Association of Research Libraries
Dianne van der Reyden, U.S. Library of Congress, DC [U]
John M. Watts, Jr., Fire Safety Institute, VT [SE]
J. Andrew Wilson, Smithsonian Institution, DC [U]
Robert D. Wilson, National Gallery of Art, DC [U]

Alternates

Steve Carter, Orr Protection Systems, Inc., KY [M]
(Alt. to C. A. Sabah)
Russell P. Fleming, National Fire Sprinkler Association, NY [M]
(Alt. to P. W. Thomas)
Marilyn E. Kaplan, Preservation Architecture, NY [SE]
(Alt. to J. M. Watts, Jr.)
Michael Kilby, Smithsonian Institution, DC [U]
(Alt. to J. A. Wilson)
L. Jeffrey Mattern, FM Global, PA [I]
(Alt. to R. F. Fisher)
Joe Mazzeo, National Park Service, MA [E]
(Alt. to S. M. Peterson)
Danny L. McDaniel, Colonial Williamsburg Foundation, VA [U]
(Alt. to C. Greczek)
Ross Merrill, National Gallery of Art, DC [U]
(Alt. to R. D. Wilson)
Thomas F. Norton, Blue Diamond Seabees, AP [M]
(Alt. to W. D. Moore)
Sheila Palmer, Chubb & Son Insurance Company, NY [I]
(Voting Alt. to Chubb Rep.)
Martin H. Reiss, The RJA Group, Inc., MA [SE]
(Alt. to R. D. Barnes)

Nonvoting

Stefano Marsella, Rome, Italy [SE]
Charles E. Zimmerman, Norfolk, VA
(Member Emeritus)

Milosh T. Puchovsky, NFPA Staff Liaison

This list represents the membership at the time the Committee was balloted on the final text of this edition. Since that time, changes in the membership may have occurred. A key to classifications is found at the back of the document.

NOTE: Membership on a committee shall not in and of itself constitute an endorsement of the Association or any document developed by the committee on which the member serves.

Committee Scope: This Committee shall have primary responsibility for documents on fire safety for libraries, museums, places of worship, and historic structures and their contents, but shall not overlap the provisions of NFPA *101®, Life Safety Code®*.

Copyright National Fire Protection Association
Provided by IHS under license with NFPA
No reproduction or networking permitted without license from IHS
Not for Resale

Contents

Chapter 1 Administration **914–** 6
1.1 Scope **914–** 6
1.2 Purpose **914–** 6
1.3 Application **914–** 6
1.4 Equivalency **914–** 6
1.5 Compliance Options **914–** 6
1.6 Enforcement **914–** 6

Chapter 2 Referenced Publications **914–** 6
2.1 General **914–** 6
2.2 NFPA Publications **914–** 7
2.3 Other Publications **914–** 7
2.4 References for Extracts in Mandatory Sections **914–** 7

Chapter 3 Definitions **914–** 8
3.1 General **914–** 8
3.2 NFPA Official Definitions **914–** 8
3.3 General Definitions **914–** 8

Chapter 4 Goals and Objectives **914–** 11
4.1 General **914–** 11
4.2 Goals **914–** 11
4.3 Objectives **914–** 11

Chapter 5 Reserved **914–** 12

Chapter 6 Security **914–** 12
6.1 General **914–** 12
6.2 Locking Devices **914–** 12
6.3 Construction Areas **914–** 12
6.4 Access Control **914–** 12

Chapter 7 Process **914–** 12
7.1 General **914–** 12
7.2 Process Team **914–** 12
7.3 Assessment **914–** 12
7.4 Options **914–** 13
7.5 Option Appraisal and Selection **914–** 14
7.6 Design Review **914–** 14
7.7 Initial Compliance Audit **914–** 14
7.8 Approval **914–** 14
7.9 Periodic Compliance Audit **914–** 14

Chapter 8 Prescriptive-Based Option **914–** 14
8.1 General **914–** 14
8.2 Compensatory Features **914–** 14

Chapter 9 Performance-Based Option **914–** 14
9.1 General **914–** 14
9.2 Performance Criteria **914–** 15
9.3 Retained Prescriptive Requirements **914–** 15
9.4 Design Specifications and Other Conditions **914–** 15
9.5 Design Fire Scenarios **914–** 16
9.6 Evaluation of Proposed Design **914–** 17
9.7 Safety Factors **914–** 17
9.8 Documentation Requirements **914–** 17
9.9 Records **914–** 18

Chapter 10 Management Operational Systems ... **914–** 18
10.1 General **914–** 18
10.2 Responsibility/Authority **914–** 18
10.3 Management Plan **914–** 18
10.4 Operational Requirements **914–** 18
10.5 Fire Emergency Response Plan **914–** 18
10.6 Training **914–** 18
10.7 Drills **914–** 19
10.8 Record Keeping **914–** 19
10.9 Periodic Compliance Audit **914–** 19
10.10 Enforcement **914–** 19
10.11 Modification of Plan **914–** 19
10.12 Procedures for Opening and Closing ... **914–** 19

Chapter 11 Fire Prevention **914–** 19
11.1 General **914–** 19
11.2 Decorations **914–** 19
11.3 Fire Spread Control **914–** 19
11.4 Housekeeping **914–** 19
11.5 Smoking **914–** 20
11.6 Open Flame Use **914–** 20
11.7 Electrical Systems **914–** 20
11.8 Cabling **914–** 20
11.9 Heating, Ventilating, and Air-Conditioning (HVAC) Systems **914–** 20
11.10 Commercial Cooking and Food Service Operations **914–** 21
11.11 Access **914–** 21

Chapter 12 Additions, Alterations, and Renovations **914–** 21
12.1 General **914–** 21
12.2 Construction Oversight **914–** 21
12.3 Fire Spread Control **914–** 21
12.4 Fire Protection Systems **914–** 22
12.5 Roof Coverings **914–** 22
12.6 Electrical Systems **914–** 22
12.7 Hazardous Areas **914–** 22
12.8 Interior Finishes **914–** 23
12.9 Lightning Protection **914–** 23
12.10 Protection from Wildland Fires **914–** 23
12.11 Water Control **914–** 23

Chapter 13 Fire Precautions During Construction, Repair, and Alterations **914–** 23
13.1 Fire Protection Systems **914–** 23
13.2 Precautions **914–** 23

Copyright National Fire Protection Association
Provided by IHS under license with NFPA
No reproduction or networking permitted without license from IHS
Not for Resale

13.3 Temporary Construction and Equipment 914– 24
13.4 Construction Processes and Hazards 914– 25
13.5 Fire Resistive Construction 914– 26
13.6 Fire Suppression 914– 26
13.7 Emergency Communication 914– 26

Chapter 14 Inspection, Testing, and Maintenance 914– 27
14.1 General 914– 27
14.2 Responsibility 914– 27
14.3 Fire Protection Systems 914– 27
14.4 Impairments to Fire Protection Systems 914– 27
14.5 Heating, Air-Conditioning, and Cooking Equipment 914– 28
14.6 Chimneys 914– 28
14.7 Electrical Systems 914– 28
14.8 Fire Walls and Fire Barrier Walls 914– 28
14.9 Fire-Retardant-Treated Materials 914– 28
14.10 Fire Extinguishers 914– 28

Chapter 15 Special Events 914– 28
15.1 General 914– 28
15.2 Occupant Loading 914– 28
15.3 Egress 914– 28
15.4 Commercial Cooking and Food Service Operations 914– 28
15.5 Smoking 914– 28
15.6 Fireworks 914– 28
15.7 Combustibles 914– 28
15.8 Electrical Equipment 914– 28

Annex A Explanatory Material 914– 29

Annex B Planning and Design Appraisal 914– 40

Annex C Survey Criteria for an Historic Structure 914– 45

Annex D Basics of Fire and Fire Protection Systems 914– 49

Annex E Resources for Protection of Cultural Resource Property Projects 914– 55

Annex F Examples of Compliance Alternatives .. 914– 56

Annex G Performance-Based Fire Safety Code Compliance 914– 60

Annex H Methods to Determine Untenable Conditions 914– 61

Annex I Assessment Methods 914– 62

Annex J Fire Safety Inspection Forms 914– 65

Annex K Fire System Maintenance Checklists 914– 67

Annex L Sensitivity and Uncertainty Analysis and Safety Factors 914– 71

Annex M Sample Ordinance Adopting NFPA 914 ..... 914– 72

Annex N Secretary of the Interior's Standards ... 914– 73

Annex O Guideline on Fire Ratings of Archaic Materials and Assemblies 914– 74

Annex P BSI Timber Panel Door Standard 914–201

Annex Q Informational References 914–209

Index 914–211

--`,,```,,,,````-`-`,,`,,`,`,,`---
Copyright National Fire Protection Association
Provided by IHS under license with NFPA
No reproduction or networking permitted without license from IHS
Not for Resale

NFPA 914

Code for

Fire Protection of Historic Structures

2007 Edition

IMPORTANT NOTE: This NFPA document is made available for use subject to important notices and legal disclaimers. These notices and disclaimers appear in all publications containing this document and may be found under the heading "Important Notices and Disclaimers Concerning NFPA Documents." They can also be obtained on request from NFPA or viewed at www.nfpa.org/disclaimers.

NOTICE: An asterisk (*) following the number or letter designating a paragraph indicates that explanatory material on the paragraph can be found in Annex A.

A reference in brackets [ ] following a section or paragraph indicates material that has been extracted from another NFPA document. As an aid to the user, the complete title and edition of the source documents for extracts in mandatory sections of the document are given in Chapter 2 and those for extracts in informational sections are given in Annex Q. Editorial changes to extracted material consist of revising references to an appropriate division in this document or the inclusion of the document number with the division number when the reference is to the original document. Requests for interpretations or revisions of extracted text shall be sent to the technical committee responsible for the source document.

Information on referenced publications can be found in Chapter 2 and Annex Q.

Chapter 1 Administration

1.1 Scope.

1.1.1 This code describes principles and practices of fire safety for historic structures and for those who operate, use, or visit them.

1.1.2* Collections within libraries, museums, and places of worship are not within the scope of this code.

1.2* Purpose. This code shall prescribe minimum requirements for the protection of historic structures from fire through a comprehensive fire protection program, while protecting the elements, spaces, and features that make these structures historically or architecturally significant.

1.3 Application. This code shall apply to historic structures.

1.3.1 This code covers ongoing operations, renovation, and restoration and acknowledges the need to preserve historically significant and character-defining building features and to provide for continuity of operations.

1.3.2 This code addresses those construction, protection, operational, and occupancy features that are necessary to minimize danger to life, structures, and historic fabric from the effects of fire, including smoke, heat, and fumes.

1.3.3 This code identifies the minimum fire safety criteria to permit prompt escape of the building occupants to a safe area and to minimize the impact of fire and fire protection on the structure, or historic fabric.

1.3.4 Libraries, museums, and places of worship housed in historic structures shall also comply with the requirements of NFPA 909, *Code for the Protection of Cultural Resource Properties — Museums, Libraries, and Places of Worship.*

1.4 Equivalency.

1.4.1 Nothing in this code is intended to prevent the use of systems, methods, or devices of equivalent or superior quality, strength, fire resistance, or effectiveness, provided that the following conditions are met:

(1) Technical documentation shall be submitted to the authority having jurisdiction to demonstrate equivalency.
(2) The system, method, or device shall be approved for the intended purpose by the authority having jurisdiction.

1.4.2 Historic structures or portions of such structures that do not strictly comply with this code shall be considered to be in compliance if it can be shown that equivalent protection has been provided or that no specific hazard will be created or continued through noncompliance.

1.4.3 A designer capable of applying more complete and rigorous analysis to special or unusual problems shall have latitude in the development of the applicable design.

1.4.3.1 In such cases, the designer shall be responsible for demonstrating the validity of the approach.

1.4.3.2 This code shall not do away with the need for competent engineering judgment.

1.4.3.3 This code shall not be intended to be used as a design handbook.

1.5 Compliance Options.

1.5.1 General. Building design, fire protection features, and programs shall meet the life safety and property conservation goals and objectives of Chapter 4, in accordance with either of the following:

(1) Prescriptive-based provisions of 1.5.2
(2) Performance-based provisions of 1.5.3

1.5.2 Prescriptive-Based Option. A prescriptive-based design shall be in accordance with Chapters 1 through 8 and Chapters 11 through 15 of this code.

1.5.3 Performance-Based Option. A performance-based design shall be in accordance with Chapters 1 through 7 and Chapters 9, 11, 13, and 14 of this code.

1.5.4 Management Operational Systems. Management operational systems complying with Chapter 10 of this code shall be permitted as an element of a prescriptive- or performance-based solution.

1.6* Enforcement. This code shall be administered and enforced by the AHJ designated by the governing authority.

1.6.1 Organization. The owner or governing body shall designate a fire safety manager who shall administer and enforce this code.

1.6.2 Approvals by Other Authorities Having Jurisdiction. The fire safety manager shall require that the laws, rules, and regulations of all other regulatory agencies having jurisdiction shall be met when not in conflict with this code.

Chapter 2 Referenced Publications

2.1 General. The documents or portions thereof listed in this chapter are referenced within this code and shall be considered part of the requirements of this document.

--`,,```,,,,````-`-`,,`,,`,`,,`---

Copyright National Fire Protection Association
Provided by IHS under license with NFPA
No reproduction or networking permitted without license from IHS

Not for Resale

2.2 NFPA Publications. National Fire Protection Association, 1 Batterymarch Park, Quincy, MA 02169-7471.

NFPA 1, *Uniform Fire Code™,* 2006 edition.

NFPA 10, *Standard for Portable Fire Extinguishers,* 2007 edition.

NFPA 11, *Standard for Low-, Medium-, and High-Expansion Foam,* 2005 edition.

NFPA 12, *Standard on Carbon Dioxide Extinguishing Systems,* 2005 edition.

NFPA 12A, *Standard on Halon 1301 Fire Extinguishing Systems,* 2004 edition.

NFPA 13, *Standard for the Installation of Sprinkler Systems,* 2007 edition.

NFPA 13D, *Standard for the Installation of Sprinkler Systems in One- and Two-Family Dwellings and Manufactured Homes,* 2007 edition.

NFPA 13R, *Standard for the Installation of Sprinkler Systems in Residential Occupancies up to and Including Four Stories in Height,* 2007 edition.

NFPA 14, *Standard for the Installation of Standpipe and Hose Systems,* 2007 edition.

NFPA 15, *Standard for Water Spray Fixed Systems for Fire Protection,* 2007 edition.

NFPA 16, *Standard for the Installation of Foam-Water Sprinkler and Foam-Water Spray Systems,* 2003 edition.

NFPA 17, *Standard for Dry Chemical Extinguishing Systems,* 2002 edition.

NFPA 17A, *Standard for Wet Chemical Extinguishing Systems,* 2002 edition.

NFPA 25, *Standard for the Inspection, Testing, and Maintenance of Water-Based Fire Protection Systems,* 2002 edition.

NFPA 30, *Flammable and Combustible Liquids Code,* 2003 edition.

NFPA 31, *Standard for the Installation of Oil-Burning Equipment,* 2006 edition.

NFPA 51B, *Standard for Fire Prevention During Welding, Cutting, and Other Hot Work,* 2003 edition.

NFPA 54, *National Fuel Gas Code,* 2006 edition.

NFPA 58, *Liquefied Petroleum Gas Code,* 2004 edition.

NFPA 70, *National Electrical Code®,* 2005 edition.

NFPA 72®, National Fire Alarm Code®, 2007 edition.

NFPA 80, *Standard for Fire Doors and Other Opening Protectives,* 2007 edition.

NFPA 90A, *Standard for the Installation of Air-Conditioning and Ventilating Systems,* 2002 edition.

NFPA 90B, *Standard for the Installation of Warm Air Heating and Air-Conditioning Systems,* 2006 edition.

NFPA 92A, *Standard for Smoke-Control Systems Utilizing Barriers and Pressure Differences,* 2006 edition.

NFPA 92B, *Standard for Smoke Management Systems in Malls, Atria, and Large Spaces,* 2005 edition.

NFPA 96, *Standard for Ventilation Control and Fire Protection of Commercial Cooking Operations,* 2004 edition.

NFPA *101®, Life Safety Code®,* 2006 edition.

NFPA 110, *Standard for Emergency and Standby Power Systems,* 2005 edition.

NFPA 204, *Standard for Smoke and Heat Venting,* 2002 edition.

NFPA 211, *Standard for Chimneys, Fireplaces, Vents, and Solid Fuel–Burning Appliances,* 2006 edition.

NFPA 241, *Standard for Safeguarding Construction, Alteration, and Demolition Operations,* 2004 edition.

NFPA 251, *Standard Methods of Tests of Fire Resistance of Building Construction and Materials,* 2006 edition.

NFPA 255, *Standard Method of Test of Surface Burning Characteristics of Building Materials,* 2006 edition.

NFPA 259, *Standard Test Method for Potential Heat of Building Materials,* 2003 edition.

NFPA 701, *Standard Methods of Fire Tests for Flame Propagation of Textiles and Films,* 2004 edition.

NFPA 703, *Standard for Fire Retardant–Treated Wood and Fire-Retardant Coatings for Building Materials,* 2006 edition.

NFPA 750, *Standard on Water Mist Fire Protection Systems,* 2006 edition.

NFPA 780, *Standard for the Installation of Lightning Protection Systems,* 2004 edition.

NFPA 909, *Code for the Protection of Cultural Resource Properties — Museums, Libraries, and Places of Worship,* 2005 edition.

NFPA 1123, *Code for Fireworks Display,* 2006 edition.

NFPA 1126, *Standard for the Use of Pyrotechnics Before a Proximate Audience,* 2006 edition.

NFPA 1144, *Standard for Protection of Life and Property from Wildfire,* 2002 edition.

NFPA 2001, *Standard on Clean Agent Fire Extinguishing Systems,* 2004 edition.

NFPA 5000®, Building Construction and Safety Code®, 2006 edition.

2.3 Other Publications.

2.3.1 ASTM Publications. ASTM International, 100 Barr Harbor Drive, P.O. Box 5700, West Conshohocken, PA 19428-2959.

ASTM E 84, *Standard Test Method for Surface Burning Characteristics of Building Materials,* 2005.

ASTM E 119, *Standard Test Methods for Fire Tests of Building Construction and Materials,* 2000.

ASTM E 136, *Standard Test method for Behavior of Materials in a Vertical tube Furnace at 750°C,* 1995.

ASTM E 1591, *Standard Guide for Data for Fire Models,* 1994.

2.3.2 Other Publications. *Merriam-Webster's Collegiate Dictionary,* 11th edition, Merriam-Webster, Inc., Springfield, MA, 2003.

2.4 References for Extracts in Mandatory Sections.

NFPA 1, *Uniform Fire Code™,* 2006 edition.

NFPA 13, *Standard for the Installation of Sprinkler Systems,* 2007 edition.

NFPA 25, *Standard for the Inspection, Testing, and Maintenance of Water-Based Fire Protection Systems,* 2002 edition.

NFPA 51B, *Standard for Fire Prevention During Welding, Cutting, and Other Hot Work,* 2003 edition.

NFPA 72®, National Fire Alarm Code®, 2007 edition.

NFPA *101®, Life Safety Code®,* 2006 edition.

NFPA 220, *Standard on Types of Building Construction,* 2006 edition.

NFPA 472, *Standard for Professional Competence of Responders to Hazardous Materials Incidents,* 2002 edition.

NFPA 805, *Performance-Based Standard for Fire Protection for Light Water Reactor Electric Generating Plants,* 2006 edition.

NFPA 921, *Guide for Fire and Explosion Investigations,* 2004 edition.

NFPA 5000®, Building Construction and Safety Code®, 2006 edition.

Copyright National Fire Protection Association
Provided by IHS under license with NFPA
No reproduction or networking permitted without license from IHS
Not for Resale

Chapter 3 Definitions

3.1 General. The definitions contained in this chapter shall apply to the terms used in this code. Where terms are not defined in this chapter or within another chapter, they shall be defined using their ordinarily accepted meanings within the context in which they are used. *Merriam-Webster's Collegiate Dictionary,* 11th edition, shall be the source for the ordinarily accepted meaning.

3.2 NFPA Official Definitions.

3.2.1* Approved. Acceptable to the authority having jurisdiction.

3.2.2* Authority Having Jurisdiction (AHJ). An organization, office, or individual responsible for enforcing the requirements of a code or standard, or for approving equipment, materials, an installation, or a procedure.

3.2.3* Code. A standard that is an extensive compilation of provisions covering broad subject matter or that is suitable for adoption into law independently of other codes and standards.

3.2.4 Labeled. Equipment or materials to which has been attached a label, symbol, or other identifying mark of an organization that is acceptable to the authority having jurisdiction and concerned with product evaluation, that maintains periodic inspection of production of labeled equipment or materials, and by whose labeling the manufacturer indicates compliance with appropriate standards or performance in a specified manner.

3.2.5* Listed. Equipment, materials, or services included in a list published by an organization that is acceptable to the authority having jurisdiction and concerned with evaluation of products or services, that maintains periodic inspection of production of listed equipment or materials or periodic evaluation of services, and whose listing states that either the equipment, material, or service meets appropriate designated standards or has been tested and found suitable for a specified purpose.

3.2.6 Shall. Indicates a mandatory requirement.

3.2.7 Should. Indicates a recommendation or that which is advised but not required.

3.2.8 Standard. A document, the main text of which contains only mandatory provisions using the word "shall" to indicate requirements and which is in a form generally suitable for mandatory reference by another standard or code or for adoption into law. Nonmandatory provisions shall be located in an appendix or annex, footnote, or fine-print note and are not to be considered a part of the requirements of a standard.

3.3 General Definitions.

3.3.1 Adaptive Reuse. The conversion or functional change of a building from the purpose or use for which it was originally constructed or designed.

3.3.2 Addition. An increase in building area, aggregate floor area, height, or number of stories of a structure. [***5000,*** 2006]

3.3.3 Alternative Calculation Procedure. A calculation procedure that differs from the procedure originally employed by the design team but that provides predictions for the same variables of interest. [***101,*** 2006]

3.3.4 Arson. The crime of maliciously and intentionally, or recklessly, starting a fire or causing an explosion. [**921,** 2004]

3.3.5* Atrium. A large-volume space created by a floor opening or series of floor openings connecting two or more stories that is covered at the top of the series of openings and is used for purposes other than as an enclosed stairway, elevator hoistway, escalator opening, or utility shaft used for plumbing, electrical, air conditioning, or communication facilities.

3.3.6 Barrier.

3.3.6.1* *Fire Barrier.* A continuous membrane or a membrane with discontinuities created by protected openings with a specified fire protection rating, where such membrane is designed and constructed with a specified fire resistance rating to limit the spread of fire, that also restricts the movement of smoke. [***101,*** 2006]

3.3.6.2* *Smoke Barrier.* A continuous membrane, or a membrane with discontinuities created by protected openings, where such membrane is designed and constructed to restrict the movement of smoke. [***101,*** 2006]

3.3.6.3* *Thermal Barrier.* A material that limits the average temperature rise of an unexposed surface to not more than 250°F (139°C) for a specified fire exposure complying with the standard time-temperature curve of NFPA 251, *Standard Methods of Tests of Fire Resistance of Building Construction and Materials,* or ASTM E 119, *Standard Test Methods for Fire Tests of Building Construction and Materials.*

3.3.7 Building Manager. The authorized person, formally and officially appointed or designated by the governing body or a responsible party, who is charged with the duties and responsibilities of providing and ensuring the overall management, operation, and maintenance for that facility or institution.

3.3.8* Building Systems. An assembly or set of units made up of components that provide services to spaces in a building.

3.3.9* Buildings. Structures, usually enclosed by walls and a roof, constructed to provide support or shelter for an intended occupancy.

3.3.10 Character-Defining Feature. A prominent or distinctive aspect, quality, or characteristic of a cultural resource property that contributes significantly to its physical character.

3.3.11 Collections. Prehistoric and historic objects, works of art, natural history specimens, religious objects, archival documents, archeological artifacts, library media, and cultural materials assembled according to some rational scheme and maintained for the purposes of preservation, research, study, exhibition, publication, and interpretation for public benefit.

3.3.12 Compartment. See 3.3.26, Fire Compartment.

3.3.13 Compliance. Adherence or conformance to laws and standards.

3.3.14* Conservation. The professional practice of examination, documentation, treatment, and preventative care devoted to the preservation of cultural property.

3.3.15* Cultural Resource Properties. Buildings, structures, or sites, or portions thereof, that are culturally significant, or that house culturally significant collections.

3.3.16 Damage Limitation Plan. Written procedures that outline and prioritize the actions to take following a disaster to minimize property damage and loss.

Copyright National Fire Protection Association
Provided by IHS under license with NFPA
No reproduction or networking permitted without license from IHS
Not for Resale

3.3.17 Data Conversion. The process of developing the input data set for the assessment method of choice. [***101,*** 2006]

3.3.18* Design Specifications. A building's characteristics and other conditions that are under the control of the design team.

3.3.19* Design Team. A group of stakeholders including, but not limited to, representatives of the architect, client, and any pertinent engineers and other designers. [***101,*** 2006]

3.3.20 Early Warning. A signal provided by a system that detects fire in its earliest stages of development to enhance the opportunity of building occupants to escape and to commence manual suppression of the fire prior to arrival of fire service units.

3.3.21 Equivalency. An alternative means of providing an equal or greater degree of fire safety than that afforded by strict conformance to prescribed codes and standards.

3.3.22 Exit. That portion of a means of egress that is separated from all other spaces of a building or structure by construction or equipment as required to provide a protected way of travel to the exit discharge.

3.3.23 Exit Access. That portion of a means of egress that leads to an exit. [***101,*** 2006]

3.3.24 Exit Discharge. That portion of a means of egress between the termination of an exit and a public way.

3.3.25* Exposure Fire. A fire that starts at a location that is remote from the area being protected and grows to expose that which is being protected. [***101,*** 2006]

3.3.26 Fire Compartment. A space within a building that is enclosed by fire barriers on all sides, including the top and bottom.

3.3.27 Fire Hazard. Any situation, process, material, or condition that, on the basis of applicable data, can cause a fire or explosion or that can provide a ready fuel supply to augment the spread or intensity of a fire or explosion, all of which pose a threat to life or property.

3.3.28 Fire Load. The weight of combustibles in a fire area [$(ft^2)(m^2)$] or on a floor in buildings and structures, including either contents or building parts, or both.

3.3.29* Fire Model. Mathematical prediction of fire growth, environmental conditions, and potential effects on structures, systems, or components based on the conservation equations or empirical data. [**805,** 2006]

3.3.30 Fire Resistance Rating. The time, in minutes or hours, that materials or assemblies have withstood a fire exposure as established in accordance with the test procedures of NFPA 251, *Standard Methods of Tests of Fire Resistance of Building Construction and Materials.*

3.3.31 Fire Resistive. Properties of designs to resist the effects of any fire to which a material or structure can be expected to be subjected.

3.3.32 Fire Retardant. A liquid, solid, or gas that tends to inhibit combustion when applied on, mixed in, or combined with combustible materials. [**1,** 2006]

3.3.33* Fire Safety Manager. For the purposes of this standard, the person designated by the governing body or responsible party of an historic building or structure with the duties and responsibilities of providing and ensuring fire protection for that facility or institution.

3.3.34 Fire Watch. The assignment of a person or persons to an area for the express purpose of notifying the fire department, building occupants, or both, of an emergency, preventing a fire from occurring, extinguishing small fires, or protecting the public from fire or life safety dangers.

3.3.35 Firestop. A specific system, device, or construction consisting of the materials that fill the openings around penetrating items such as cables, cable trays, conduits, ducts, pipes, and their means of support through the wall or floor openings to prevent the spread of fire. [***5000,*** 2006]

3.3.36* Fuel Load. The total quantity of combustible contents of a building, space, or fire area, including interior finish and trim, expressed in heat units or the equivalent weight in wood. [**921,** 2004]

3.3.37 Goal. A nonspecific overall outcome to be achieved that is measured on a qualitative basis.

3.3.38 Governing Body. The board of directors, trustees, or other body charged with governance and fiduciary responsibility of a cultural resource property.

3.3.39* Hazardous Area. An area of a structure or building that poses a degree of hazard greater than that normal to the general occupancy of the building or structure. [***5000,*** 2006]

3.3.40* Historic Building. For the purpose of this standard, a building that is designated, or deemed eligible for such designation, by a local, regional, or national jurisdiction as having historical, architectural, or cultural significance.

3.3.41 Historic Fabric. Original or added building or construction materials, features, and finishes that existed during the period that is deemed to be most architecturally or historically significant, or both.

3.3.42 Historic Preservation. A generic term that encompasses all aspects of the professional and public concern related to the maintenance of a historic structure, site, or element in its current condition, as originally constructed, or with the additions and alterations determined to have acquired significance over time.

3.3.43 Historic Site. A place, often with associated structures, having historic significance.

3.3.44 Historic Structure. A building, bridge, lighthouse, monument, pier, vessel, or other construction that is designated or that is deemed eligible for such designation by a local, regional, or national jurisdiction as having historical, architectural, or cultural significance.

3.3.45 Hot Work. Work involving burning, welding, or a similar operation that is capable of initiating fires or explosions. [**51B,** 2003]

3.3.46 Impairment. A shutdown of a system or portion thereof. [**25,** 2002]

3.3.46.1 ***Emergency Impairment.*** As used in this code, a condition where a fire protection system or portion thereof is out of order due to an unexpected occurrence.

3.3.46.2 ***Preplanned Impairment.*** As used in this code, a condition where a fire protection system or a portion thereof is out of service due to work that has been planned.

Copyright National Fire Protection Association
Provided by IHS under license with NFPA
No reproduction or networking permitted without license from IHS
Not for Resale

3.3.47 Incapacitation. A condition under which humans do not function adequately and become unable to escape untenable conditions.

3.3.48 Initiating Device. A system component that originates transmission of a change-of-state of condition, such as in a smoke detector, manual fire alarm box, or supervisory switch. [*72,* 2007]

3.3.49 Input Data Specification. Information required by the verification method.

3.3.50 Library. A place in which books and other media are kept for reading, reference, or lending.

3.3.51* Limited-Combustible Material. Refers to a building construction not complying with the definition of noncombustible that, in the form in which it is used, has a potential heat value not exceeding 8141 kJ/kg (3500 Btu/lb), where tested in accordance with NFPA 259, and includes either (1) materials having a structural base of noncombustible material, with a surfacing not exceeding a thickness of 3.2 mm (⅛ in.) that has a flame spread index not greater than 50; or (2) materials, in the form and thickness used, having neither a flame spread index greater than 25 nor evidence of continued progressive combustion, and of such composition that surfaces that would be exposed by cutting through the material on any plane would have neither a flame spread index greater than 25 nor evidence of continued progressive combustion, when tested in accordance with NFPA 255 or ASTM E 84. [**220,** 2006]

3.3.52 Means of Egress. A continuous and unobstructed way of exit travel from any point in a building or structure to a public way consisting of three separate and distinct parts: (1) the exit access, (2) the exit, and (3) the exit discharge.

3.3.53 Means of Escape. A way out of a building or structure that does not conform to the strict definition of means of egress but does provide an alternate way out.

3.3.54 Museum. Any building or place where cultural, scientific, or artistic items of intrinsic cultural value and interest are kept or exhibited to the public.

3.3.55 Noncombustible. A material that, in the form in which it is used and under normal conditions anticipated, will not ignite, burn, support combustion, or release flammable vapors when subjected to fire or heat. Materials that are reported as passing ASTM E 136, *Standard Test Method for Behavior of Materials in a Vertical Tube Furnace at 750°C*, shall be considered noncombustible materials.

3.3.56 Notification Appliance. A fire alarm system component such as a bell, horn, speaker, light, or text display that provides audible, tactile, or visible outputs, or any combination thereof. [*72,* 2007]

3.3.57* Objective. A goal that is achieved through the attainment of a skill, knowledge, or both, that can be observed or measured. [**472,** 2002]

3.3.58 Occupancy. The purpose for which a building or other structure, or part thereof, is used or intended to be used. [*5000,* 2006]

3.3.59 Occupant Characteristics. The abilities or behaviors of people before and during a fire.

3.3.60 Occupant Load. The total number of persons that might occupy a building or portion thereof at any one time.

3.3.61* Performance-Based Design Approach. A design process whose fire safety solutions are designed to achieve a specified goal for a specified use or application.

3.3.62 Performance Criteria. Threshold values on measurement scales that are based on quantified performance objectives.

3.3.63 Place of Worship. Any building that functions primarily as a group meeting place for the practice of religion. This includes, but is not limited to, churches, synagogues, cathedrals, temples, and meeting halls.

3.3.64* Prescriptive-Based Document. A code or standard that prescribes fire safety for a generic use or application.

3.3.65 Preservation. The act or process of applying measures necessary to sustain the existing form, integrity, and materials of a historic building or structure.

3.3.66 Private. Intended for or limited to the use of some particular person(s) or group.

3.3.67 Process Team. A group of stakeholders including, but not limited to, representatives from architects, clients, engineers and designers, authorities having jurisdiction, and preservation specialists.

3.3.68* Proposed Design. A design developed by a design team and submitted to the authority having jurisdiction for approval.

3.3.69 Protected Premises. The physical location protected by a fire alarm system, fire suppression system, or both.

3.3.70* Protection. Those measures and actions taken to prevent or minimize loss from fire, arson, vandalism, theft, and similar hazards to persons and property.

3.3.71 Protective Systems, Equipment, or Apparatus. Automatic sprinklers, standpipes, carbon dioxide systems, clean agent systems, automatic covers, and other devices used for extinguishing fires.

3.3.72 Public. Of, pertaining to, or affecting a population or a community as a whole; open to all persons.

3.3.73 Rehabilitation. For the purposes of this code, the act or process of making possible a compatible use of a property through repair, alteration, and additions, while preserving those portions or features that convey its historical, cultural, or architectural values.

3.3.74 Restoration. The act or process of accurately depicting the form, features, and character of a property as it appeared at a particular period of time by means of the removal of features from other periods of its history, reconstruction of missing features, and repair of damaged or altered features from the restoration period.

3.3.75 Safe Location. A location remote or separated from the effects of a fire so that such effects no longer pose a threat.

3.3.76 Safety Factor. A factor applied to a predicted value to ensure that a sufficient safety margin is maintained.

3.3.77 Safety Margin. The difference between a predicted value and the actual value where a fault condition is expected.

3.3.78 Scenario.

3.3.78.1 ***Design Fire Scenario.*** A fire scenario selected for evaluation of a proposed design.

Copyright National Fire Protection Association
Provided by IHS under license with NFPA
No reproduction or networking permitted without license from IHS
Not for Resale

3.3.78.2* ***Fire Scenario.*** For the purposes of this code, a set of conditions that defines the development of fire, the spread of combustion products throughout a building or portion of a building, the reactions of people to fire, the impact of a fire on the historic significance in or near a room of particular significance, and the effects of combustion products.

3.3.79 Self-Closing. Equipped with an approved device that ensures closing after opening. [***101,*** 2006]

3.3.80 Sensitivity Analysis. An analysis performed to determine the degree to which a predicted output will vary given a specified change in an input parameter, usually in relation to models.

3.3.81 Separation. See 3.3.6.1, Fire Barrier.

3.3.82 Smoke Detector. A device that detects visible or invisible particles of combustion.

3.3.83* Special Event. Any activity outside of the normal daily operations.

3.3.84 Stakeholder. An individual, or representative of same, having an interest in the successful completion of a project.

3.3.85* Structure. That which is built or constructed and limited to buildings and nonbuilding structures as defined herein. [***5000,*** 2006]

3.3.86 System.

3.3.86.1 ***Fire Alarm System.*** A system or portion of a combination system that consists of components and circuits arranged to monitor and annunciate the status of fire alarm or supervisory signal initiating devices and to initiate the appropriate response to those signals. [***72,*** 2007]

3.3.86.2 ***Fire Protection System.*** Any fire alarm device or system or fire extinguishing device or system, or their combination, that is designed and installed for detecting, controlling, or extinguishing a fire or otherwise alerting occupants, or the fire department, or both, that a fire has occurred.

3.3.86.3 ***Sprinkler System.*** For fire protection purposes, an integrated system of underground and overhead piping designed in accordance with fire protection engineering standards. The installation includes at least one automatic water supply which supplies one or more systems. The portion of the sprinkler system above ground is a network of specially sized or hydraulically designed piping installed in a building, structure, or area, generally overhead, and to which sprinklers are attached in a systematic pattern. Each system has a control valve located in the system riser or its supply piping. Each sprinkler system includes a device for actuating an alarm when the system is in operation. The system is usually activated by heat from a fire and discharges water over the fire area. [**13,** 2007]

3.3.87 Uncertainty Analysis. An analysis performed to determine the degree to which a predicted value will vary. [***101,*** 2006]

3.3.88 Verification Method. A procedure or process used to demonstrate or confirm that the proposed design meets the specified criteria. [***101,*** 2006]

3.3.89 Vertical Opening. An opening through a floor or roof. [***101,*** 2006]

3.3.90 Zone. A defined area within the protected premises. A zone can define an area from which a signal can be received, an area to which a signal can be sent, or an area in which a form of control can be executed. [***72,*** 2007]

Chapter 4 Goals and Objectives

4.1 General. Fire safety goals and objectives shall be adopted that reflect the level of loss and interruption of service to the client community that those responsible for the historic structure are willing to accept as a result of a fire.

4.2 Goals. The goals of this code shall be to provide for fire protection to all historic structures and their occupants while protecting those elements, spaces, and features that make the structures historically or architecturally significant. The two goals shall be accomplished by operational approaches, system approaches, or the consideration of other factors, and shall be as follows:

(1) Provide protection and life safety from the effects of fire
(2) Maintain the historic fabric and integrity of the building

4.2.1 Life Safety. The life safety goal of this code shall be to provide an environment that is reasonably safe from death or injury in fire and similar perils as follows:

(1) Protection of occupants not intimate with the initial fire development
(2) Improvement of the survivability of occupants intimate with the initial fire development

4.2.2* Historic Preservation. The historic preservation goal of this code shall be to provide a reasonable level of protection against damage to and loss of historic structures, their unique characteristics, and their contents as follows:

(1) Minimize damage to historic structures or materials from fire and fire suppression
(2) Maintain and preserve original space configurations of historic buildings
(3) Minimize alteration, destruction, or loss of historic fabric or design

4.3* Objectives.

4.3.1 Life Safety.

4.3.1.1 An egress system shall be designed, implemented, and maintained to protect the occupants not intimate with the initial fire development for the time needed to evacuate, relocate, or defend in place.

4.3.1.2 Structural integrity during a fire shall be maintained for the time needed to evacuate, relocate, or defend in place the occupants not intimate with the initial fire development.

4.3.1.3 Building construction and operation necessary to achieve the goals of this code shall be effective, maintained, and operational.

4.3.2 Historic Preservation.

4.3.2.1* Fire safety and fire protection features shall be designed, approved, implemented, and maintained to preserve the original qualities or character of a building, structure, site, or environment.

4.3.2.2 Removal or alteration of any historic material or distinctive architectural features for the purpose of improving fire protection or life safety shall be minimized.

Copyright National Fire Protection Association
Provided by IHS under license with NFPA
No reproduction or networking permitted without license from IHS
Not for Resale

4.3.2.3 Distinctive stylistic features or examples of skilled craftsmanship that characterize a building, structure, or site shall be treated with sensitivity.

4.3.2.4* A compatible use for a property that requires minimal alteration of the building, structure, or site and its environment shall be encouraged.

4.3.2.5 New additions or alterations shall be designed and constructed in such a manner that, if such additions or alterations were to be removed in the future, the essential form and integrity of the structure would be, to the greatest degree possible, unimpaired.

Chapter 5 Reserved

Chapter 6 Security

6.1* General.

6.1.1 Measures to protect against the risk of arson, theft, burglary, and similar acts shall not impede emergency evacuation.

6.1.2 Arson. Arson prevention shall be included in the cultural resource property's fire safety goals required in Chapter 4.

6.1.3 Fire Protection Plan.

6.1.3.1 Security practices, procedures, operations, and systems to reduce the threat of arson shall be integrated into the cultural resource property's fire protection plan.

6.1.3.2 The fire protection plan shall include screening all personnel, including part-time and volunteers, against records of known fire setters.

6.2 Locking Devices.

6.2.1 Where permitted by the AHJ, delayed egress locking devices shall comply with the provisions of 7.2.1.6.1 of NFPA *101, Life Safety Code*.

6.2.2 Delayed egress locking devices shall be tested regularly, but not less than quarterly, and a written record of the test and the results shall be kept.

6.3 Construction Areas.

6.3.1 Access to construction areas shall be restricted to personnel authorized by the owner or the contractor.

6.3.2 Security officers assigned to construction areas shall receive daily updates on the status of construction activities, including fire protection equipment, special hazards including hot work, modified access routes, and emergency procedures.

6.4 Access Control. Procedures shall be implemented to screen and identify official visitors, contractors, and others who have access to nonpublic areas of the cultural resource property.

Chapter 7 Process

7.1* General. The process by which this code shall be applied is shown in Figure 7.1.

7.2* Process Team.

7.2.1 The owner or governing body shall identify a process team to oversee the application of the code to the historic building.

7.2.2 The team shall include persons with expertise in historic preservation and fire protection.

7.3* Assessment. A detailed assessment or survey of the fire safety features and the historic integrity of the structure, site, or both, shall be completed.

7.3.1 Identification of Historic Elements, Spaces, and Features.

7.3.1.1 Historic Documentation.

7.3.1.1.1 All persons involved with the design of the building shall be aware of the cultural significance of the historic structure prior to beginning the design.

7.3.1.1.2 All persons involved with the construction process shall be thoroughly briefed on the cultural significance and importance of the structure, spaces, or character-defining features prior to the beginning of the work.

7.3.1.2* Historic Structure: Exterior. The building survey shall identify those character-defining features and finishes that make the exterior of the building significant.

7.3.1.3* Construction. The building survey shall determine primary and secondary significance of all character-defining features and facades.

7.3.1.4 Adjacent and Secondary Structures. The building survey shall include all structures located on or adjacent to the historic property.

7.3.1.5 Site Elements. The building survey shall identify significant character-defining features of the property such as vegetation, landscape features, roads and driveways, walking paths, fencing, and exterior use.

7.3.1.6* Historic Structure: Interior. The building survey shall identify all significant interior spaces, floor plan organization, and character-defining features and finishes in the building, including those original to the building and those changes that have acquired significance in their own right.

7.3.2 Prioritization of Historic Elements, Spaces, and Features. The building survey shall determine primary and secondary significance of all historic elements, spaces, and features.

7.3.2.1 Modifications or additions shall be located at less visible, secondary areas in a manner that minimizes visual impact and damage to historic materials.

7.3.2.2 Modifications and additions shall be permitted at primary areas when it is not practicable to utilize secondary areas.

7.3.3 Identification of Fire Safety Issues.

7.3.3.1 Code, Standard, and Regulation Compliance.

7.3.3.1.1 The building survey of existing conditions shall include a review of all fire safety-related requirements to determine if and where the historic building is deficient with respect to applicable codes.

7.3.3.1.2 Alternative methods that offer equivalent or greater protection while preserving the character-defining spaces, features, and finishes of the historic structure shall be permitted.

7.3.3.1.3* Buildings shall be evaluated in accordance with the requirements of NFPA 1, *Uniform Fire Code*, and NFPA *101, Life Safety Code*.

Copyright National Fire Protection Association
Provided by IHS under license with NFPA
No reproduction or networking permitted without license from IHS
Not for Resale

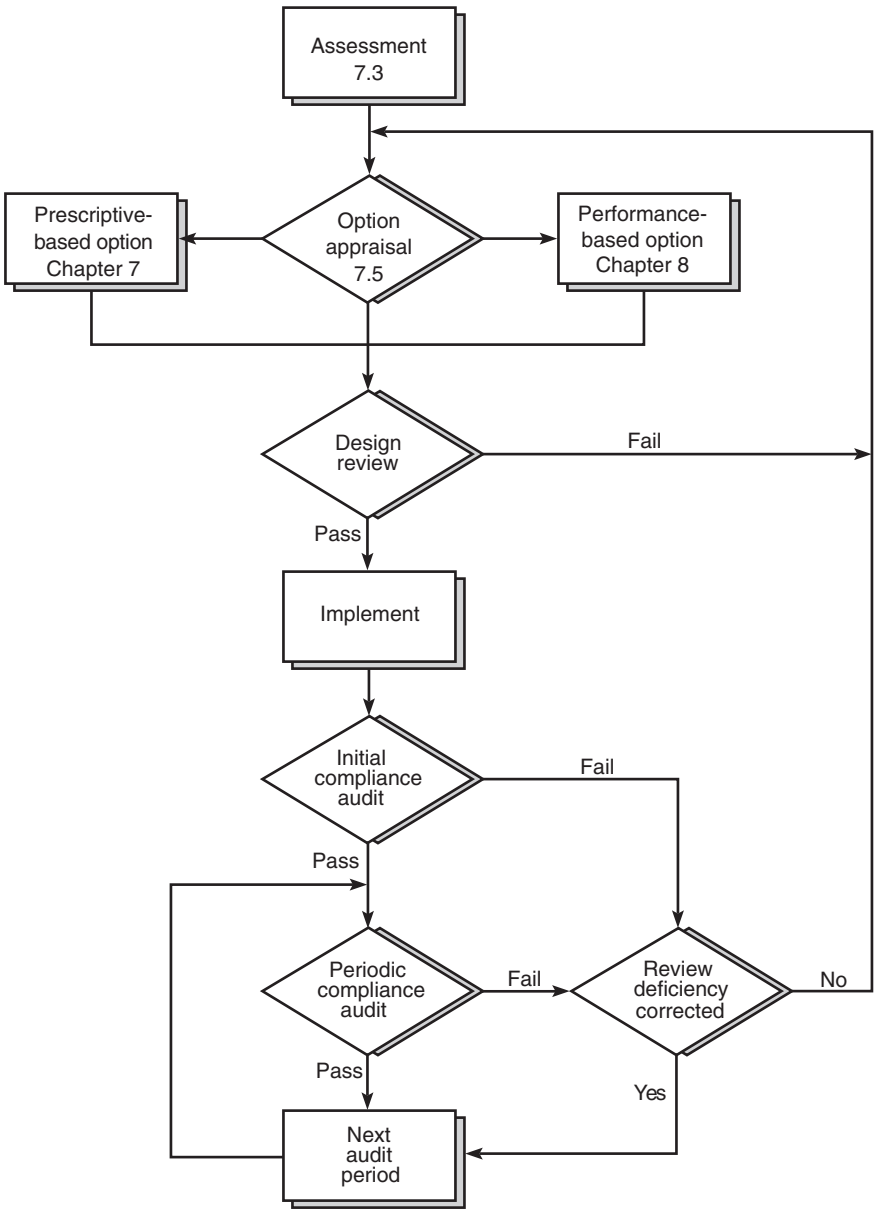

FIGURE 7.1 Process Flow Chart.

7.3.3.2 Fire Hazards and Safety Deficiencies. The building survey shall identify known conditions that contribute to the start or spread of a fire or to the endangerment of people or property by fire.

7.3.3.3 Fire Spread. The building shall be evaluated to determine known potential paths of fire spread, both internal and external, that are inherent to its design.

7.3.3.4 Means of Egress.

7.3.3.4.1 The building survey shall be evaluated in accordance with the means of egress requirements of NFPA *101, Life Safety Code.*

7.3.3.4.2 An evaluation of the means of egress shall be completed that includes, but is not limited to, numbers of exits, exit capacity, exit fire resistance, dead-end corridors, travel distances, and unenclosed stairs.

7.4 Options.

7.4.1 Structures that are found to satisfy both the life safety and historic preservation objectives of this code shall be subject to the periodic compliance audit required by Section 7.9.

7.4.2 Structures that are found to have life safety deficiencies, preservation needs, or both, shall have a plan of correction developed that satisfies one of the following:

(1) Prescriptive compliance, including equivalency, alternatives, and modifications
(2) Risk indexing compliance *(see 8.1.3)*
(3) Performance-based compliance
(4) Any combination of items 7.4.2(1) through 7.4.2(3)

Copyright National Fire Protection Association
Provided by IHS under license with NFPA
No reproduction or networking permitted without license from IHS
Not for Resale

7.5 Option Appraisal and Selection.

7.5.1* Selection Criteria.

7.5.1.1 An appraisal of the available options shall be made by the process team and a method of application of the code shall be selected.

7.5.1.2 The method of application shall be from the prescriptive-based approach, the performance-based approach, or a combination of both.

7.5.2 Prescriptive-Based Option. Prescriptive solutions shall meet the requirements of Chapters 1 through 8 and Chapters 11 through 15, including any exceptions contained within the referenced prescriptive codes and standards.

7.5.3 Performance-Based Option. Performance-based solutions shall be developed in accordance with Chapters 1 through 7 and Chapters 9, 11, 13, and 14 of this code.

7.6 Design Review. The process team shall review and approve the preferred design approach to achieve compliance.

7.7 Initial Compliance Audit. Upon completion of the implementation phase, there shall be an initial compliance audit by the process team to ensure compliance with the selected design approach.

7.8 Approval. The AHJ shall make the final determination as to whether compliance has been achieved.

7.9 Periodic Compliance Audit.

7.9.1 The periodic compliance audit shall be conducted by the AHJ or designee at intervals identified in the approved fire safety management plan, but not less than annually.

7.9.2 Additional compliance audits shall be conducted prior to special events *(see Chapter 15)*.

7.9.3 Exit Interview.

7.9.3.1 The AHJ or designee shall conduct an exit interview with the fire safety manager and the owner or governing body of the building upon completion of the periodic compliance audit.

7.9.3.2 The exit interview shall identify all areas of noncompliance with the approved management plan.

7.9.3.3 Following the periodic compliance audit, any deficiencies shall be addressed, with corrective action taken and documented.

Chapter 8 Prescriptive-Based Option

8.1 General.

8.1.1* Application.

8.1.1.1 Prescriptive requirements of the applicable codes shall be applied with the intent of achieving the goals and objectives of Chapter 4 of this document.

8.1.1.2* Application of prescriptive requirements shall include alternatives, equivalencies, modifications, or any combination thereof.

8.1.2* Alternatives. Prescribed alternative methods of compliance in the applicable codes shall be identified.

8.1.3* Equivalency.

8.1.3.1 The AHJ shall approve other fire safety approaches, systems, methods, or devices that are equivalent or superior to those prescribed by this code, provided that adequate documentation is submitted to demonstrate equivalency.

8.1.3.2* Approaches, systems, methods, or devices approved as equivalent by the AHJ shall be recognized as being in compliance with this document.

8.1.4* Modification of Requirements.

8.1.4.1 The requirements of the applicable codes shall be permitted to be modified if their application clearly would be impractical in the judgment of the AHJ, but only where it is also clearly evident that a reasonable degree of safety is provided.

8.1.4.2 The modifications that are allowed and any additional requirements that are imposed as a result shall be documented.

8.2* Compensatory Features. Where equivalencies or modifications of requirements are proposed, the following fire safety features shall be permitted to be considered as compensatory features:

(1) Noncombustible or limited-combustible construction materials
(2) Noncombustible or fire-retardant treatments for new interior finish materials and historic fabrics
(3) Noncombustible or fire-retardant-treated materials for furnishings and contents
(4) Rated walls and doors that will prevent the horizontal spread of fire and smoke, to subdivide building areas or to segregate specific hazards such as boilers, furnaces, or storage areas from the remainder of the building
(5) Enclosure of stairways, ventilation shafts, and other vertical openings with rated construction, to prevent the vertical spread of fire and smoke
(6)*Firestops, to prevent the spread of fire within walls and between rafters and joists and through horizontal and vertical fire barriers
(7)*Fire-resistive construction using fire-resistive materials
(8)*Fire detection and alarm systems that will sound an alarm within the structure and transmit an alarm signal to an alarm monitoring location or local fire department
(9) Automatic suppression systems, manual suppression systems, or a combination of the two
(10) Management and operational controls that meet the requirements of Chapter 10
(11) Installation of arc-fault circuit-interrupters (AFCIs)
(12) Height of ceilings, with recognition that a large volume of space above head height provides occupants at floor level additional time to safely exit the room or building

Chapter 9 Performance-Based Option

9.1* General.

9.1.1 Application. The requirements of this chapter shall apply to fire protection systems, management operation systems, and life safety systems designed according to the performance-based option permitted by 7.5.3.

9.1.2 Goals and Objectives. The performance-based design shall meet the goals and objectives of this code in accordance with Sections 4.2 and 4.3.

9.1.3* Approved Qualifications. The performance-based design shall be prepared by a person with qualifications acceptable to the AHJ. *(See also 9.8.12.)*

Copyright National Fire Protection Association
Provided by IHS under license with NFPA
No reproduction or networking permitted without license from IHS
Not for Resale

9.1.4* Independent Review. The AHJ shall be permitted to require review and evaluation by an approved, independent third party.

9.1.5 Sources of Data.

9.1.5.1 The source for each input data requirement that must be met by using a data source other than a design fire scenario, an assumption, or a building design specification shall be identified and documented.

9.1.5.2 Sources of data shall be characterized as to the degree of conservatism reflected, and a justification for the source shall be provided.

9.1.6 Final Determination. The AHJ shall make the final determination as to whether the performance objectives have been met.

9.1.7* Maintenance of Design Features.

9.1.7.1 The design features and management operational system required for the building to continue to meet the performance goals and objectives of this code shall be maintained for the life of the building.

9.1.7.2 This management operational system shall include complying with all documented assumptions and design specifications.

9.1.7.3 Any variations to the management operational system shall require the approval of the AHJ prior to the actual change. *(See also 7.9.1.)*

9.1.8 Special Definitions. A list of special terms used in this chapter are as follows:

(1) **Alternative Calculation Procedure.** See 3.3.3.
(2) **Data Conversion.** See 3.3.17.
(3) **Design Fire Scenario.** See 3.3.78.1.
(4) **Design Specifications.** See 3.3.18.
(5) **Design Team.** See 3.3.19.
(6) **Exposure Fire.** See 3.3.25.
(7) **Fire Model.** See 3.3.29.
(8) **Fire Scenario.** See 3.3.78.2.
(9) **Fuel Load.** See 3.3.36.
(10) **Incapacitation.** See 3.3.47.
(11) **Input Data Specification.** See 3.3.49.
(12) **Occupant Characteristics.** See 3.3.59.
(13) **Performance Criteria.** See 3.3.62.
(14) **Proposed Design.** See 3.3.68.
(15) **Safe Location.** See 3.3.75.
(16) **Safety Factor.** See 3.3.76.
(17) **Safety Margin.** See 3.3.77.
(18) **Sensitivity Analysis.** See 3.3.80.
(19) **Stakeholder**. See 3.3.84.
(20) **Uncertainty Analysis.** See 3.3.87.
(21) **Verification Method.** See 3.3.88.

9.2 Performance Criteria.

9.2.1 General.

9.2.1.1 An historic structure shall meet the performance criteria for life safety and historic preservation.

9.2.1.2 Each design shall meet the objectives specified in Section 4.3, if, for each design fire scenario, assumption, and design specification, the performance criteria in 9.2.2 are met.

9.2.2 Performance Criteria.

9.2.2.1* Life Safety Performance Criteria. Any occupant who is not intimate with ignition shall not be exposed to instantaneous or cumulative untenable conditions.

9.2.2.2* Historic Preservation Performance Criteria. Historically significant rooms, spaces, or contents shall not be exposed to instantaneous or cumulative fire effects that cause irreversible damage.

9.3 Retained Prescriptive Requirements.

9.3.1* Systems and Features. All fire protection systems and features of the building shall comply with applicable NFPA standards for those systems and features.

9.3.2* Means of Egress. Features of the means of egress not specifically addressed in the performance criteria shall comply with NFPA *101, Life Safety Code*.

9.4 Design Specifications and Other Conditions.

9.4.1* Clear Statement. Design specifications and other conditions used in the performance-based design shall be demonstrated to the AHJ to be realistic and sustainable.

9.4.2 Assumptions and Design Specifications Data.

9.4.2.1 Each assumption and design specification used in the design shall be accurately translated into input data specifications as appropriate for the calculation method or model.

9.4.2.2 Any assumptions and design specifications that the design analyses do not explicitly address or incorporate and are, therefore, omitted from input data specifications shall be identified, and a sensitivity analysis of the consequences of that omission shall be performed.

9.4.2.3 Any assumptions and design specifications that are modified in input data specifications because of limitations in test methods or other data generation procedures shall be identified, and a sensitivity analysis of the consequences of the modification shall be performed.

9.4.3* Building Characteristics. Characteristics of the building or its contents, equipment, or operations that are not inherent in the design specifications but affect occupant behavior or the rate of hazard development shall be explicitly identified.

9.4.4* Operational Status and Effectiveness of Building Features and Systems. The performance of fire protection systems and building features shall reflect the documented performance of the components of those systems or features unless design specifications are incorporated to modify the expected performance.

9.4.5 Occupant Characteristics.

9.4.5.1* General. The selection of occupant characteristics to be used in the design calculations shall be approved by the AHJ and shall provide an accurate reflection of the expected population of building occupants.

9.4.5.1.1 Occupant characteristics shall represent the normal occupant profile unless design specifications are used to modify the expected occupant features.

9.4.5.1.2 Occupant characteristics shall not vary across fire scenarios except as authorized by the AHJ.

9.4.5.2* Response Characteristics. Each of the following basic performance response characteristics shall be considered:

(1) Sensibility
(2) Reactivity
(3) Mobility
(4) Susceptibility

Copyright National Fire Protection Association
Provided by IHS under license with NFPA
No reproduction or networking permitted without license from IHS
Not for Resale

9.4.5.2.1 These estimations shall reflect the expected distribution of characteristics of a population appropriate to the use of the building.

9.4.5.2.2 The source of data for these characteristics shall be documented.

9.4.5.3 Location. The assumption shall be made that in every normally occupied room or area, at least one person shall be located at the most remote point from the exits.

9.4.5.4* Number.

9.4.5.4.1 The design shall be based on the maximum number of people that every occupied room or area is expected to contain.

9.4.5.4.2 Where success or failure of the design is contingent on a maximum number of occupants, operational controls shall be used.

9.4.5.5* Staff Assistance. The ability of trained employees to be included as part of the fire safety system shall be identified, and the necessary training and capabilities shall be documented.

9.4.6 Emergency Response Personnel. Design characteristics or other conditions related to the availability, speed of response, effectiveness, roles, and other characteristics of emergency response personnel shall be specified or characterized sufficiently for evaluation of the design.

9.4.7* Post-Construction Conditions. Design characteristics or other conditions related to activities during the life of the building that affect the ability of the building to meet the stated goals and objectives shall be specified, estimated, or characterized sufficiently to evaluate the design.

9.4.8 Off-Site Conditions. Design characteristics or other conditions related to resources or conditions outside the property being designed that affect the ability of the building to meet the stated goals and objectives shall be specified, estimated, or characterized sufficiently to evaluate the design.

9.4.9* Consistency of Assumptions. The design shall not include mutually inconsistent assumptions, specifications, or statements of conditions.

9.4.10* Special Provisions. Additional provisions not covered by Section 7.4 but that are required for the design to comply with the performance objectives shall be documented.

9.5 Design Fire Scenarios.

9.5.1* General.

9.5.1.1 The AHJ shall approve the parameters involved with design fire scenarios.

9.5.1.2 The proposed design shall meet the goals and objectives if it achieves the performance criteria for each required design fire scenario. *(See 9.5.3.)*

9.5.2* Evaluation.

9.5.2.1 Design fire scenarios shall be evaluated using a method acceptable to the AHJ and appropriate for the conditions.

9.5.2.2 Each scenario shall be challenging but realistic with respect to at least one of the following scenario specifications:

(1) Initial fire location
(2) Early rate of growth in fire severity
(3) Smoke generation

9.5.2.3 The scenario specifications shall be as challenging as could realistically occur in the building.

9.5.3* Required Design Fire Scenarios.

9.5.3.1 Scenarios selected as design fire scenarios shall include, but not be limited to, those specified in 9.5.3.2 through 9.5.3.9.

9.5.3.1.1 Each scenario shall include a life safety aspect (Part A) and a building protection aspect (Part B), when applicable.

9.5.3.1.2 Design fire scenarios demonstrated by the design team to the satisfaction of the AHJ as inappropriate for the building use and conditions shall not be required.

9.5.3.2* Design Fire Scenario 1. This scenario shall be an occupancy-specific design fire scenario that is representative of a typical fire for the occupancy.

9.5.3.2.1 This scenario shall explicitly account for the following:

(1) Occupant activities, number, and location
(2) Room size
(3) Nature and significance of furnishings and contents
(4) Fuel properties and ignition sources
(5) Ventilation conditions

9.5.3.2.2 The first item ignited and its location shall be explicitly defined.

9.5.3.3* Design Fire Scenario 2. This scenario shall be an ultrafast-developing fire in the primary means of egress, with interior doors open at the start of the fire.

9.5.3.3.1 Part A. This design fire scenario shall address reducing the number of available means of egress.

9.5.3.3.2 Part B. This design fire scenario shall address reducing the effects of a rapidly spreading fire on interior finish and structural components.

9.5.3.4* Design Fire Scenario 3. This scenario shall be a fire, starting in a normally unoccupied room, that potentially can endanger a large number of occupants in a large room or other area.

9.5.3.4.1 Part A. This design fire scenario shall address a fire that starts in a normally unoccupied room and migrates into the space that potentially can hold the greatest number of occupants in the building.

9.5.3.4.2 Part B. This design fire scenario shall address a fire that starts in an unoccupied space, that potentially can grow and endanger the area of greatest historical significance.

9.5.3.5* Design Fire Scenario 4. This scenario shall be a fire that originates in a concealed wall or ceiling space that is adjacent to a large number of occupants in a large room.

9.5.3.5.1 Part A. This design fire scenario shall address the concern of a fire that originates in a concealed space that does not have either a detection system or suppression system, and that spreads into the room within the building that potentially can hold the greatest number of occupants.

9.5.3.5.2 Part B. This design fire scenario shall address a fire that originates in a concealed space that does not have either a detection system or a suppression system, that potentially can grow and endanger the area of greatest historical significance.

Copyright National Fire Protection Association
Provided by IHS under license with NFPA
No reproduction or networking permitted without license from IHS
Not for Resale

9.5.3.6* Design Fire Scenario 5. This scenario shall be a slow-developing fire that is shielded from fire protection systems and is in close proximity to a high-occupancy area.

9.5.3.6.1 Part A. This design fire scenario shall address a relatively small ignition source that causes a significant fire.

9.5.3.6.2 Part B. This design fire scenario shall address a relatively small ignition source that causes a significant fire that can potentially endanger the area of greatest historical significance as the result of the delayed suppression of the fire.

9.5.3.7* Design Fire Scenario 6.

9.5.3.7.1 This scenario shall be the most severe fire that results from the largest possible fuel load that is characteristic of the normal operation of the building.

9.5.3.7.2 This scenario shall address the concern of a rapidly developing fire with occupants present.

9.5.3.8* Design Fire Scenario 7.

9.5.3.8.1 This scenario shall be an outside exposure fire.

9.5.3.8.2 This scenario shall address a fire that starts remotely from the area of concern and either spreads into the area, blocks escape from the area, or develops untenable conditions within the area.

9.5.3.9* Design Fire Scenario 8. This scenario shall be a fire that originates in ordinary combustibles in a room or area with each passive or active fire protection system rendered unavailable one by one.

9.5.3.9.1 This set of design fire scenarios shall address each fire protection system or fire protection feature, considered individually, being unreliable or unavailable.

9.5.3.9.2* Design Fire Scenario 8 shall not be required for fire protection systems where the level of reliability in conjunction with the design performance in the absence of the system is acceptable to the AHJ.

9.5.4 Design Fire Scenario Data.

9.5.4.1 Each design fire scenario used in the performance-based design proposal shall be translated into input data specifications, as appropriate, for the calculation method or model.

9.5.4.2 Any design fire scenario specifications that the design analyses do not explicitly address or incorporate, and are, therefore, omitted from input data specifications, shall be identified, and a sensitivity analysis of the consequences of that omission shall be performed.

9.5.4.3 Any design fire scenario specifications modified in input data specifications because of limitations in test methods or other data generation procedures shall be identified, and a sensitivity analysis of the consequences of the modification shall be performed.

9.6 Evaluation of Proposed Design.

9.6.1* General.

9.6.1.1 A proposed design's performance shall be assessed relative to each performance objective in Section 4.3 and to each applicable scenario in Section 9.5, with the assessment conducted through the use of appropriate calculation methods.

9.6.1.2 The AHJ shall approve the choice of assessment methods.

9.6.2 Use. The design professional shall use the assessment methods to demonstrate that the proposed design will achieve the goals and objectives as measured by the performance criteria, in light of the safety margins and uncertainty analysis, for each scenario, given the assumptions.

9.6.3 Input Data.

9.6.3.1 Data.

9.6.3.1.1 Input data for computer fire models shall be obtained in accordance with ASTM E 1591, *Standard Guide for Data for Fire Models.*

9.6.3.1.2 Data for use in analytical models that are not computer-based fire models shall be obtained using appropriate measurement, recording, and storage techniques to ensure the applicability of the data to the analytical method being used.

9.6.3.2 Data Requirements. A complete listing of input data requirements for all models, engineering methods, and other calculation or verification methods that are required or proposed as part of the performance-based design shall be provided.

9.6.3.3* Uncertainty and Conservatism in Data. Uncertainty in input data shall be analyzed and, as determined appropriate by the AHJ, addressed through the use of conservative values.

9.6.4* Output Data. The assessment methods used shall accurately and appropriately produce the required output data from input data based on the design specifications, assumptions, and scenarios.

9.6.5 Validity. Evidence shall be provided confirming that the assessment methods are valid and appropriate for the proposed building, use, and conditions.

9.7* Safety Factors. Approved safety factors shall be included in the design methods and calculations to reflect uncertainty in the assumptions, data, and other factors associated with the performance-based design.

9.8 Documentation Requirements.

9.8.1* General.

9.8.1.1 All aspects of the design, including those described in 9.8.2 through 9.8.13, shall be documented.

9.8.1.2 The format and content of the documentation shall be acceptable to the AHJ.

9.8.2* Technical References and Resources.

9.8.2.1 The AHJ shall be provided with sufficient documentation to support the validity, accuracy, relevance, and precision of the proposed assessment methods.

9.8.2.2 The engineering standards, calculation methods, and other forms of scientific information provided shall be appropriate for the particular application and methodologies used.

9.8.3 Building Design Specifications. All details of the proposed building design that affect the ability of the building to meet the stated goals and objectives shall be documented.

9.8.4 Performance Criteria. Performance criteria, with sources, shall be documented.

9.8.5 Occupant Characteristics. Assumptions made about occupant characteristics shall be documented.

Copyright National Fire Protection Association
Provided by IHS under license with NFPA
No reproduction or networking permitted without license from IHS
Not for Resale

9.8.6 Design Fire Scenarios. Descriptions of design fire scenarios shall be documented.

9.8.7 Input Data. Input data to models and assessment methods, including a sensitivity analysis, shall be documented.

9.8.8 Output Data. Output data from models and assessment methods, including a sensitivity analysis, shall be documented.

9.8.9 Safety Factors. Safety factors utilized shall be documented.

9.8.10 Prescriptive Requirements. Retained prescriptive requirements shall be documented.

9.8.11* Modeling Features.

9.8.11.1 Assumptions made by the model user and descriptions of models and methods used, including known limitations, shall be documented.

9.8.11.2 Documentation shall be provided that indicates the validity and appropriateness of the assessment methods used to address the design specifications, assumptions, and scenarios.

9.8.12 Evidence of Modeling Capability. The design team's relevant experience with the models, test methods, databases, and other assessment methods used in the performance-based design proposal shall be documented.

9.8.13 Use of Performance-Based Design Option. Design proposals shall include documentation that provides anyone involved in ownership or management of the building with notification of the following:

(1) The building was approved as a performance-based design with certain specified design criteria and assumptions.
(2) Any remodeling, modification, renovation, change in use, or change in the established assumptions shall require a re-evaluation and re-approval.
(3) All special events shall be reviewed and approved based upon the designs developed under this chapter.

9.9 Records. Records required in this section shall be maintained for the life of the current performance-based design.

Chapter 10 Management Operational Systems

10.1* General.

10.1.1 This chapter shall establish criteria for management operational systems that are acceptable as elements of a prescriptive solution or a performance-based approach, as provided in 1.5.4.

10.1.2 Other operational control features shall be permitted subject to the approval of the AHJ.

10.2* Responsibility/Authority.

10.2.1* The owner, governing board, or other body having custody over the building and site shall designate a fire safety manager, who shall be responsible for the implementation and maintenance of the management operational system.

10.2.2 The fire safety manager shall have the authority to implement all elements of the management operational system, including but not limited to, the following:

(1) Directing the actions of building staff and occupants with regard to fire safety
(2) Entering into legally binding contractual agreements with the AHJ
(3) Ordering required fire safety drills and exercises
(4) Halting contractor and maintenance operations, which may threaten the fabric or contents of the building

10.2.3 The fire safety manager shall be responsible for implementation of all elements of the approved management plan.

10.3* Management Plan.

10.3.1 The fire safety management plan shall consist of required elements, as set forth in 10.4 through 10.12, and optional elements as agreed to by the property manager and the AHJ.

10.3.2 The fire safety management plan shall become effective upon approval of the AHJ.

10.4 Operational Requirements.

10.4.1 Operational controls or a plan of operations shall include special provisions that are granted as part of a performance-based approach or a prescriptive-based approach in evaluating the building or structure as defined by the process team and as approved by the AHJ.

10.4.2 Operational controls shall include the special provisions pertaining to the management, operations, and stewardship of the historic property.

10.4.3 Operational controls shall be defined as part of the provisional evaluation.

10.5 Fire Emergency Response Plan.

10.5.1 The fire safety manager and the owner or governing body shall develop and implement an emergency response plan, subject to the approval of the AHJ.

10.5.2 The plan shall include provisions for notifying the fire department of the type and location of the emergency and directing them to the location when they arrive at the property.

10.5.3 Emergency telephone numbers shall be posted on or adjacent to all telephones.

10.5.4 An emergency evacuation plan shall be prepared in cooperation with the local fire department and other applicable authorities and updated annually.

10.5.5 The emergency evacuation plan shall include the following:

(1) Fire safety precautions for special events and celebrations when normal operational conditions are substantially changed
(2) Fire safety precautions to make necessary adjustments for temporary and special exhibits
(3) Modification of staff training and drills to adjust for circumstances and larger visitation that can be created by special events and exhibits
(4) Provisions to notify the local fire department of special events that are expected to require adjustments to the emergency evacuation plan

10.6 Training.

10.6.1 The fire safety manager, building staff, and volunteers shall obtain training as agreed upon with the AHJ.

Copyright National Fire Protection Association
Provided by IHS under license with NFPA
No reproduction or networking permitted without license from IHS
Not for Resale

10.6.2 At a minimum, training shall include the fire emergency response plan, use of fire protection equipment, and other elements of the approved management plan.

10.7 Drills.

10.7.1 Drills shall be conducted to reinforce training and evaluate staff and volunteer preparedness, at intervals agreed upon by the fire safety manager and the AHJ, but in no event less than annually.

10.7.2 Where required, the AHJ shall be notified in advance of all scheduled drills.

10.7.3 Additional training shall be required when any of the following conditions occur:

(1) Use, occupancy, structure, or internal layout of the building changes.
(2) Drills indicate that staff or volunteers are not sufficiently familiar with the facility's fire safety management plan and fire protection equipment to respond properly under emergency conditions.
(3) Special events that have unusual occupancies or conditions are scheduled.
(4) Portable fire extinguishers constitute a part of the fire safety management plan.
(5) New materials, substances, or products are introduced into the building.

10.8 Record Keeping.

10.8.1 The fire safety manager shall be responsible for maintaining a permanent, current file of the historic site's or institution's fire safety management plan or management operational system.

10.8.2 All records shall be made available to the AHJ on request.

10.8.3 Permanent records shall be kept documenting the following:

(1) Training of staff and volunteers, including fire evacuation drills and use of portable fire extinguishers
(2) Inspection, testing, and maintenance reports for all fire safety equipment and systems, including records of actions taken to correct deficiencies
(3) As-built plans, specifications, wiring and layout diagrams, and acceptance test reports for all fire protection systems including detection, alarm, and suppression systems
(4) The facility's fire emergency response plan
(5) The facility's emergency plan
(6) Inspection reports by local code enforcement officials, the AHJ, local fire service officials, and insurance loss control representatives, including records of action taken to correct deficiencies identified during each inspection
(7) Fire protection system(s) activation and alarm reports, complete with the cause of the alarm or activation, the response, and the corrective action(s) taken
(8) Full reports, including cause, extent of damage, response, and recovery of all fire incidents
(9) Operational requirements as defined in the approved fire safety management plan

10.9 Periodic Compliance Audit.

10.9.1 The periodic compliance audit shall be conducted at intervals identified in the approved fire safety management plan, but not less than annually.

10.9.2 Additional compliance audits shall be conducted prior to special events *(see Chapter 15)*.

10.9.3 Exit Interview.

10.9.3.1 The compliance audit shall include an exit interview with the fire safety manager and the owner or governing body of the building upon completion of the periodic compliance audit.

10.9.3.2 The exit interview shall identify all areas of noncompliance with the approved fire safety management plan.

10.10* Enforcement. Where a compliance audit reveals noncompliance with the approved fire safety management plan or changes in the use or arrangement of the building, the AHJ shall be notified.

10.11 Modification of Plan. Proposed modification to the fire safety management plan shall be approved by the AHJ.

10.12* Procedures for Opening and Closing. The property management plan shall include checklists identifying specific action required in conjunction with opening and closing the building on a daily basis and for any special events that are held in the building.

Chapter 11 Fire Prevention

11.1 General. This chapter establishes minimum criteria for fire prevention in the operation of historic buildings.

11.2 Decorations.

11.2.1 Decorative materials used for special events, occasions, and holidays shall be noncombustible or shall be treated with an approved fire-retardant coating.

11.2.2 Decorations shall be kept a minimum of 36 in. (0.90 m) from ignition sources, such as light fixtures, radiators, electric heaters, and other heat generating devices.

11.2.3 The use of combustible vegetation, including natural cut Christmas trees, shall be in accordance with Section 10.14 of NFPA 1, *Uniform Fire Code*.

11.3* Fire Spread Control.

11.3.1 Interior doors shall be kept closed when the building is not occupied except as permitted in 11.3.2.

11.3.2 Where doors are required to remain open for interior ventilation, and air movement concerns are critical to the conservation of historic building fabric, or where the interior doors are part of the historic fabric, careful and professional analysis shall be performed and documented, and documented alternative methods to control fire spread shall be implemented.

11.4 Housekeeping.

11.4.1 Stairs, corridors, doors, and any other portions of the means of egress for a building shall be maintained free of obstructions, combustibles, trash containers, and other materials.

11.4.2 Attics and Crawl Spaces.

11.4.2.1 Attics and crawl spaces shall be locked and kept free of storage except as permitted by 11.4.2.2.

Copyright National Fire Protection Association
Provided by IHS under license with NFPA
No reproduction or networking permitted without license from IHS
Not for Resale

11.4.2.2 Combustible materials shall be permitted to be stored in attics and crawl spaces protected by automatic suppression systems designed to protect such materials.

11.4.3 Electrical rooms, mechanical rooms, and telephone closets shall be kept free of combustibles and locked.

11.4.4 Stacks, exhaust ducts, and filters shall be cleaned as frequently as necessary to prevent the buildup of combustible dusts and fibers.

11.4.5* Materials that could cause spontaneous heating shall be kept isolated from other combustibles and shall be stored in metal containers with tight-fitting metal lids.

11.4.6 Ventilated metal lockers shall be provided for storage of highly combustible supplies and workers' clothing contaminated with combustible or flammable liquids.

11.4.7 Flammable liquids shall be stored in approved safety containers in accordance with NFPA 30, *Flammable and Combustible Liquids Code*.

11.4.8 Combustible Packing Materials.

11.4.8.1* Combustible packing materials shall be stored in approved metal containers with self-closing covers.

11.4.8.2 Areas where packing materials cannot be protected using metal containers with self-closing covers, dedicated crating and packing areas, shall be enclosed in 1-hour fire-resistive construction or shall be equipped with sprinklers.

11.4.9 Trash and Trash Containers.

11.4.9.1 Trash shall be collected and disposed of at the end of each work day and more often if necessary.

11.4.9.2 Containers used for bulk collection of trash or recyclable paper shall be constructed of metal with metal covers.

11.4.9.3 Dumpsters and other large trash containers inside buildings shall be stored as follows:

(1) In trash rooms having both automatic sprinklers and a 1-hour fire resistance rating
(2) In loading dock areas, separated from the rest of the building with a 2-hour fire resistance rating or 1-hour fire resistance rating and protected with automatic sprinklers

11.4.9.4 Trash containers, dumpsters, and other central waste-disposal units, located outside, shall be a minimum distance of 15 ft (4.6 m) from all parts of a building exterior, including but not limited to, windows, doors, roof eaves, and utility controls.

11.5 Smoking.

11.5.1 Smoking shall be prohibited inside any building or building space or area.

11.5.1.1 Any designated exterior smoking area shall be clearly and publicly identified, and provided with approved receptacles for spent smoking materials.

11.6 Open Flame Use.

11.6.1 Approval. Use of open flames and flame-producing devices, such as candles, oil lamps, fireplaces, forges, kilns, glassblowers, cook stoves, and so forth, shall be approved by the AHJ.

11.6.2 Hot Work. Hot work shall only be permitted when performed in conformance with 13.4.1.

11.6.3 Precautions. The following precautions shall be taken to control open flame and flame-producing devices:

(1) All employees working around open flame or flame-producing devices shall be trained in the proper use and operation of the device and in emergency response procedures.
(2) Open flames and flame-producing devices shall be monitored constantly by a trained person.
(3) A fire extinguisher listed for the purpose shall be located within 30 ft (9.15 m) of the area where open flames or flame-producing devices are in use.
(4) Candles shall be kept a minimum of 4 ft (1.22 m) from combustible window treatments and wall or ceiling hangings.
(5) Fireplaces shall be covered with a fire screen when not used for cooking or similar demonstrations.
(6) Open flames within 100 ft (31 m) of the building shall not be left unattended.
(7) The use of open flames either inside or outside the building shall be extinguished prior to shutdown of the facility to ensure that the flame is completely extinguished.

11.6.4 Chimneys.

11.6.4.1 Fireplaces or stoves shall be used only where chimneys are in accordance with NFPA 211, *Standard for Chimneys, Fireplaces, Vents, and Solid Fuel–Burning Appliances*.

11.6.4.2 Fireplaces or stoves shall be used only where chimneys are lined, provided with a spark arrester, and maintained in good working order.

11.6.4.3 Chimneys serving active fireplaces or stoves shall be inspected and cleaned annually.

11.7 Electrical Systems.

11.7.1 Exposed electrical wiring of any type or extension cords shall not be placed across any means of egress.

11.7.2* All electrical appliances, fixtures, or wiring shall be maintained in accordance with NFPA 70, *National Electrical Code*.

11.7.3 Permanent wiring abandoned in place shall be tagged or otherwise identified at its termination and junction points as "Abandoned in Place," or it shall be removed from all accessible areas and insulated from contact with other live electrical wiring or devices.

11.8 Cabling.

11.8.1 Communication cabling, such as telecommunication, network, and protective systems cabling, shall comply with the requirements of NFPA 70, *National Electrical Code*.

11.8.2 When any such cabling passes through fire barriers or fire walls, such penetrations shall be protected in accordance with Chapter 8 of *NFPA 5000, Building Construction and Safety Code*.

11.9 Heating, Ventilating, and Air-Conditioning (HVAC) Systems.

11.9.1 Heating and air-conditioning systems shall be maintained in accordance with the manufacturer's specifications and the applicable NFPA standards.

11.9.2 Equipment shall be maintained in accordance with the standards identified in 14.5.1.

Copyright National Fire Protection Association
Provided by IHS under license with NFPA
No reproduction or networking permitted without license from IHS
Not for Resale

11.9.3 Heating equipment and ductwork shall be kept free of flammable and combustible deposits.

11.9.4 Portable Heaters.

11.9.4.1 The AHJ shall be permitted to prohibit the use of portable heaters in occupancies or situations where such use or operation would present an undue danger to life or property.

11.9.4.2 Portable heaters shall be located so they cannot be overturned.

11.9.4.3 All portable heaters shall be equipped with an automatic shutoff that activates when the unit is tilted or turned over.

11.9.5 The use of unvented fuel-fired heating equipment shall be prohibited in historic buildings.

11.10 Commercial Cooking and Food Service Operations.

11.10.1 Cooking shall be performed in kitchen facilities.

11.10.2 Kitchen facilities used for cooking in historic structures shall meet one of the following conditions:

(1) Kitchen areas are protected with an automatic sprinkler system.
(2) Kitchen areas are separated from adjacent areas with a minimum of 1-hour fire-rated enclosures, including floors and ceiling assemblies, with fire-rated enclosures of all openings and penetrations, compartments, including protection of all openings and penetrations.
(3) Cooking equipment is protected in accordance with NFPA 96, *Standard for Ventilation Control and Fire Protection of Commercial Cooking Operations*.

11.10.3 Open-flame food warming devices shall be permitted to be used in other than in kitchens only when such areas are constantly attended.

11.10.4 A portable fire extinguisher, listed for the purpose, shall be located within 10 ft (3.1 m) of any cooking, warming, or related operation and shall be properly identified.

11.11 Access.

11.11.1 An approved location at the site shall be designated as a control area and shall provide floor plans, utility central plans, emergency contact telephone numbers, labeled keys, appropriate material safety data sheets, and other material as required by the AHJ.

11.11.2 Where security is of concern, an approved lockbox or other secure container shall be provided for this information.

Chapter 12 Additions, Alterations, and Renovations

12.1 General. Additions, alterations, and renovations shall comply with Chapter 15 of *NFPA 5000, Building Construction and Safety Code*, as well as the requirements of this chapter.

12.2 Construction Oversight.

12.2.1 Contractor Selection. Contractors selected to work on the project shall have a demonstrated knowledge and experience in working with cultural resource properties.

12.2.2 Initial Meeting/Indoctrination of Contractors.

12.2.2.1 Prior to beginning work on the project, an introductory meeting shall be held with the contractors, subcontractors, and representatives of the historic structure.

12.2.2.2 All persons involved with the construction process shall be thoroughly briefed on the significance and importance of the structure, spaces, and character-defining features, prior to beginning work.

12.2.2.3 The initial meeting shall cover the project fire safety program, including special protection for existing facilities and contents, emergency precautions, notification of both emergency services and facility staff, and security issues pertinent to the project.

12.2.3 Supervision During Construction. Management of the historic structure shall designate its own facility management representative with the authority to specify additional protection requirements for the construction project that are necessary to safeguard the existing historic structure, its contents, and fabric.

12.2.3.1 The facility management representative shall have the authority to enforce the historic structure's protection requirements and to stop work or other activities when the work or activities jeopardize the safety or security of the facility or its contents.

12.2.3.2 This supervision shall include the following:

(1) Site security and monitoring of contractors and visitors
(2) Isolation of construction from the existing building
(3) Location and handling of flammable liquids and gases
(4) Removal of rubbish and combustibles
(5) Hot work and other sources of ignition
(6) Handling of sprinklers and other fire protection system components
(7) Location and type of portable extinguishers to be used in the proximity of historic fabric

12.2.3.3 Following suspension of work each day, the facility management representative or his or her designee shall conduct a walk-through of the work area and surroundings to ensure that the site is secured and hazards properly addressed.

12.3 Fire Spread Control.

12.3.1 New openings in fire-rated assemblies, such as doorways and duct penetrations, shall have self-closing or automatic fire doors and automatic fire dampers having fire resistance ratings in accordance with Chapter 8 of *NFPA 5000, Building Construction and Safety Code*.

12.3.2 Penetrations in fire-rated assemblies such as those around cabling, pipes, and ducts, shall be sealed with approved materials to maintain the integrity of the fire-rated assembly. *(See Chapter 8 of NFPA 5000, Building Construction and Safety Code.)*

12.3.3 New elevator shafts, dumbwaiters, stairways, and other vertical openings through the structure shall be constructed in a manner that prevents the spread of fire, smoke, and heat from one level to another.

12.3.4 New doors in fire-rated assemblies required to remain in the open position for any reason shall be equipped with approved door-holding devices controlled by a listed smoke detector.

Copyright National Fire Protection Association
Provided by IHS under license with NFPA
No reproduction or networking permitted without license from IHS
Not for Resale

12.4 Fire Protection Systems.

12.4.1 Commercial Cooking Equipment. Commercial cooking equipment shall be installed in accordance with NFPA 96, *Standard for Ventilation Control and Fire Protection of Commercial Cooking Operations*.

12.4.2 Fire Alarm Systems. Any fire alarm system shall be installed, tested, and maintained in accordance with the applicable requirements of *NFPA 72, National Fire Alarm Code*.

12.4.2.1 Where automatic sprinklers are not installed, smoke detectors shall be installed in every area and space where ambient conditions permit.

12.4.2.2 Where ambient conditions will adversely affect the performance, reliability, and normal operation of smoke detectors, other forms of detection technology, such as heat detection, shall be used.

12.4.2.3 Alarm Monitoring.

12.4.2.3.1 Fire detection and alarm systems and automatic fire suppression systems shall transmit alarm, supervisory, and trouble signals to an approved monitoring facility.

12.4.2.3.2 The monitoring facility and the communications method used for alarm signal transmission shall comply with the requirements of *NFPA 72, National Fire Alarm Code*.

12.4.3 Automatic Sprinkler Systems. Any automatic sprinkler system shall be in accordance with one of the following standards, in accordance with their scopes:

(1) NFPA 13, *Standard for the Installation of Sprinkler Systems*
(2) NFPA 13D, *Standard for the Installation of Sprinkler Systems in One- and Two-Family Dwellings and Manufactured Homes*
(3) NFPA 13R, *Standard for the Installation of Sprinkler Systems in Residential Occupancies up to and Including Four Stories in Height*

12.4.3.1 Standard response sprinklers shall be permitted for use in light hazard areas.

12.4.3.2 Sprinkler systems designed and installed in accordance with NFPA 13, *Standard for the Installation of Sprinkler Systems* shall be permitted for use in one- and two-family dwellings and manufactured homes.

12.4.4 Other Automatic Extinguishing Systems.

12.4.4.1 In any occupancy where the character of the potential fuel for fire is such that extinguishment or control of fire is effectively accomplished by a type of automatic extinguishing system other than an automatic sprinkler system, such systems shall be installed in accordance with this section.

12.4.4.2 Other automatic extinguishing systems shall be installed, tested, and maintained in accordance with the applicable requirements of the standards identified in Table 12.4.4.2.

12.4.5 Portable Fire Extinguishers.

12.4.5.1 Portable fire extinguishers, listed for the purpose, shall be located, mounted, and maintained in accordance with NFPA 10, *Standard for Portable Fire Extinguishers*.

12.4.5.2 One approved portable fire extinguisher shall be readily accessible on each floor near each usable stairway.

12.4.6 Standpipe Systems. Any standpipe and hose system shall be provided in accordance with NFPA 14, *Standard for the Installation of Standpipe and Hose Systems*.

Table 12.4.4.2 Fire Suppression System Installation Standards

Fire Suppression System	Installation Standard
Low-, medium-, and high-expansion foam	NFPA 11, *Standard for Low-, Medium-, and High-Expansion Foam Systems*
Carbon dioxide	NFPA 12, *Standard on Carbon Dioxide Extinguishing Systems*
Halon 1301	NFPA 12A, *Standard on Halon 1301 Fire Extinguishing Systems*
Water spray fixed	NFPA 15, *Standard for Water Spray Fixed Systems for Fire Protection*
Deluge foam–water sprinkler	NFPA 16, *Standard for the Installation of Foam–Water Sprinkler and Foam–Water Spray Systems*
Dry chemical	NFPA 17, *Standard for Dry Chemical Extinguishing Systems*
Wet chemical	NFPA 17A, *Standard for Wet Chemical Extinguishing Systems*
Water mist	NFPA 750, *Standard on Water Mist Fire Protection Systems*
Clean agent extinguishing	NFPA 2001, *Standard on Clean Agent Fire Extinguishing Systems*

12.5 Roof Coverings.

12.5.1 Unlisted combustible roof coverings shall be treated with an approved fire-retardant coating.

12.5.1.1 A fire-retardant coating shall not be required when it would harm historic fabric.

12.5.2 The facility shall maintain a record of this treatment, including certificates of approval of retardant, application method, and re-treatment schedule.

12.5.3 Fire-retardant coated roof coverings shall be re-treated in accordance with the manufacturer's specifications.

12.6 Electrical Systems.

12.6.1 The installation of all electrical appliances and electrical equipment, including temporary installations, shall be in accordance with NFPA 70, *National Electrical Code*.

12.6.2 Emergency Power.

12.6.2.1 Emergency generators, where required, shall comply with the requirements of NFPA 110, *Standard for Emergency and Standby Power Systems*.

12.6.2.2 Emergency generators shall have sufficient capacity to support critical fire safety functions and fire suppression systems, where required.

12.6.2.3 Emergency generators that support other functions considered essential shall have sufficient capacity to support all functions with no degradation of fire safety system support.

12.7 Hazardous Areas. Newly constructed hazardous areas shall be separated from other areas by a fire separation with a minimum of 1-hour fire resistance rating.

Copyright National Fire Protection Association
Provided by IHS under license with NFPA
No reproduction or networking permitted without license from IHS
Not for Resale

12.8 Interior Finishes.

12.8.1 In additions, interior finishes that prevent flames from spreading rapidly or generating dangerous amounts of smoke and toxic products of combustion shall be selected.

12.8.2 In additions, interior finish materials shall comply with the requirements of Chapter 10 of *NFPA 5000*.

12.9 Lightning Protection. A lightning protection system, where required, shall be designed, installed, and maintained in accordance with NFPA 780, *Standard for the Installation of Lightning Protection Systems*.

12.10 Protection from Wildland Fires.

12.10.1 The governing body or party responsible for cultural resource properties located in areas that are wooded or surrounded by fire-prone vegetation or heavy brush shall incorporate the requirements of NFPA 1144, *Standard for Protection of Life and Property from Wildfire*, into the facility's or institution's fire protection program and plan.

12.10.2 Reduction of fuel loading in the landscape surrounding and owned by the cultural resource property shall be implemented in accordance with the requirements of NFPA 1144, *Standard for Protection of Life and Property from Wildfire*.

12.10.3 Where the landscape is historic and either a contributing element to the property's historic designation, or is designated itself, the governing body or responsible party shall obtain a professional historic landscape architect evaluation and recommendation for reducing fire loading that could threaten either the cultural resource property or the historic landscape.

12.10.4 The evaluation shall include an analysis with respect to the requirements of NFPA 1144, *Standard for Protection of Life and Property from Wildfire*.

12.10.5 The resulting recommendations of the evaluation shall be included in the fire protection program and plan.

12.10.6 Access roads shall be maintained and kept fully accessible at all times to accommodate fire service vehicles.

12.11 Water Control. Provisions shall be made for removal of accumulated water from manual and automatic fire-fighting operations.

Chapter 13 Fire Precautions During Construction, Repair, and Alterations

13.1 Fire Protection Systems.

13.1.1 Alterations or renovations of fire protection systems shall comply with the provisions of Section 12.4 and Chapter 55 of *NFPA 5000, Building Construction and Safety Code*.

13.1.1.1 Performance-based designs that include an acceptable solution that incorporates nontraditional use of fire protection systems shall be permitted when such designs comply with the requirements of Chapter 9 of this code.

13.1.2 Alterations or renovations of fire protection systems shall be approved by the AHJ.

13.1.3 Impairments. The provisions of Section 14.4 shall apply when fire protection systems or equipment are taken out of service.

13.2 Precautions.

13.2.1 Contracts. All construction, alteration, or renovation contracts shall specify methods and responsibilities for controlling fire hazards.

13.2.2 Supervision.

13.2.2.1 Responsibility for enforcement of the terms of the contract relating to fire hazards shall be assigned, and authority shall be given to stop work pending correction of hazards.

13.2.2.2 The AHJ shall be consulted.

13.2.3 Temporary Enclosures.

13.2.3.1 Only noncombustible panels, flame-resistant tarpaulins, or approved materials of equivalent fire-retardant characteristics shall be used.

13.2.3.2 Any other fabrics or plastic films used shall be certified as conforming to the requirements of Test Method 2 contained in NFPA 701, *Standard Methods of Fire Tests for Flame Propagation of Textiles and Films*.

13.2.3.3 Where used to enclose structures, forming equipment, and similar items, the enclosing material shall be fastened securely or guarded by construction so it cannot be blown by the wind against heaters or other sources of ignition.

13.2.3.4 Fire extinguishers listed for the purpose shall be accessible and protected from accidental damage.

13.2.4 Smoking.

13.2.4.1 Smoking shall be prohibited inside any building, building space, or area under construction, renovation, or repair.

13.2.4.2 Where contractors and workers are permitted to smoke, the fire safety manager or the responsible party for the institution or property shall designate a smoking area outside of the work area.

13.2.4.3 The designated smoking area shall be clearly and publicly identified and shall be located a sufficient distance away from all combustible and flammable materials or liquids to prevent a fire from starting.

13.2.4.4 Receptacles for spent smoking materials shall be provided in the designated smoking area.

13.2.4.5 A portable fire extinguisher, in compliance with the provisions of NFPA 10, *Standard for Portable Fire Extinguishers*, shall be located at each designated smoking area.

13.2.5 Ignition Sources.

13.2.5.1 Hot work operations shall comply with 13.4.1.

13.2.5.2 Portable heating appliances shall comply with 13.4.2.

13.2.5.3 On-site recharging of gas cylinders shall be prohibited.

13.2.5.4 Temporary lighting and wiring shall comply with the requirements of NFPA 70, *National Electrical Code*.

13.2.5.5 Gasoline-powered engines, such as those used in compressors and hoists, shall not be permitted inside the building.

Copyright National Fire Protection Association
Provided by IHS under license with NFPA
No reproduction or networking permitted without license from IHS
Not for Resale

13.2.6 Housekeeping.

13.2.6.1 The accumulation of debris or rubbish shall not be permitted inside construction areas or close to a source of ignition.

13.2.6.2 Debris and rubbish shall be removed daily from the site and shall not be burned in the vicinity.

13.2.6.3 Contractors shall provide metal receptacles with metal lids for rubbish, papers, and other debris.

13.2.6.4 Where construction debris is removed from the upper floors of a building, it shall be conveyed to containers by means of a chute erected on the outside of the building.

13.2.6.5 Where exterior chutes are used, the lower section of the chute shall be disconnected or removed to a point not less than 10 ft (3.1 m) above the dumpster at the close of each work day.

13.2.6.6 Burning waste materials on the premises shall not be permitted.

13.2.7 Flammable and Combustible Liquids. No more than a one-day supply of paint thinners, solvents, and other flammable and combustible liquids used in the project shall be kept in the building.

13.2.7.1 Flammable liquids shall be stored in approved safety cabinets and containers.

13.2.7.2 The provisions of NFPA 30, *Flammable and Combustible Liquids Code*, on limits of storage of flammable and combustible liquids inside buildings shall apply.

13.2.7.3 Quantities of flammable and combustible liquids in excess of those necessary to complete a day's work shall be stored at least 50 ft (15.2 m) away from the main construction project.

13.2.7.4 Gasoline-powered engines, such as those used in compressors and hoists, shall not be permitted inside the building.

13.2.8 Fire Protection Systems.

13.2.8.1 Fire Detection Systems.

13.2.8.1.1 Existing fire detection and alarm systems shall be maintained in working order during the project to the extent consistent with the nature of the construction.

13.2.8.1.2 Smoke detectors within the construction area shall be removed or shall be protected from dust, dirt, and extreme temperatures during construction.

13.2.8.1.3 Smoke detectors inside the construction area that are covered to keep out dust and dirt while work is in progress shall be uncovered at the end of each work day.

13.2.8.1.4 After final construction cleanup by all trades, all smoke detectors shall be cleaned or replaced in accordance with *NFPA 72, National Fire Alarm Code*.

13.2.8.1.5 Reacceptance testing in accordance with *NFPA 72, National Fire Alarm Code*, shall be performed after any adjustment, modification, or repair to any fire detection system wiring or component.

13.2.8.2 Fire Suppression Systems.

13.2.8.2.1 Automatic fire suppression systems shall be kept in working order during the project to the extent consistent with the nature of the construction.

13.2.8.2.2 Disconnected or shutoff standpipes or fire suppression systems shall be restored to service as soon as it is practical.

13.2.8.2.3 Inspections of standpipe and sprinkler valves shall be conducted and recorded in accordance with the provisions of NFPA 25, *Standard for the Inspection, Testing, and Maintenance of Water-Based Fire Protection Systems*.

13.2.8.2.4 Fire hydrants, sprinklers, standpipe and sprinkler fire department connections, and hose outlet valves shall not be obstructed and shall be maintained in accordance with NFPA 25, *Standard for the Inspection, Testing, and Maintenance of Water-Based Fire Protection Systems*.

13.3 Temporary Construction and Equipment.

13.3.1 Construction Offices and Sheds.

13.3.1.1 Temporary offices, trailers, sheds, and other temporary facilities of combustible construction shall comply with Chapter 4 of NFPA 241, *Standard for Safeguarding Construction, Alteration, and Demolition Operations*.

13.3.1.2 Heating devices used in construction offices and sheds shall be listed.

13.3.1.3 A minimum clearance of 36 in. (915 mm) shall be maintained around stoves and heaters, and a minimum clearance of 6 in. (152 mm) shall be maintained around all chimney and vent connectors, to prevent ignition of adjacent combustible materials.

13.3.1.4 Structures, equipment, and materials shall not impede egress of occupants or workers from the building or hinder access by fire apparatus to the building and hydrants.

13.3.1.5 The areas beneath all temporary offices and other facilities shall not be used for the storage of construction materials, equipment, or supplies, and measures shall be put in place to ensure that no combustible waste matter is allowed to accumulate in these areas.

13.3.2 Construction Equipment and Materials.

13.3.2.1 Equipment.

13.3.2.1.1 Internal combustion engine-powered air equipment, such as compressors, hoists, derricks, and pumps, shall be placed so the exhaust discharges away from combustible materials and air intakes for the building heating, ventilation, and air-conditioning (HVAC) system.

13.3.2.1.2 A minimum clearance of 6 in. (152 mm) shall be maintained between equipment exhaust piping and combustible materials.

13.3.2.1.3 Service areas and fuel for construction equipment shall not be located inside the building.

13.3.2.2 Materials.

13.3.2.2.1 Combustible construction components stored inside the building shall be limited to the minimum required to complete a day's project.

13.3.2.2.2 Where steel construction is present, combustible storage shall not be placed in areas where specified fire-resistive coatings have not been applied to structural members.

13.3.2.2.3 Storage of highly combustible materials such as foam, plastic, and rubber products, shall not be permitted inside the building.

Copyright National Fire Protection Association
Provided by IHS under license with NFPA
No reproduction or networking permitted without license from IHS
Not for Resale

13.3.2.2.4 Storage of construction materials shall not impede egress from buildings or access of fire apparatus to hydrants or to the building.

13.4 Construction Processes and Hazards.

13.4.1 Cutting and Welding Operations. Cutting and welding operations shall comply with the requirements of NFPA 51B, *Standard for Fire Prevention During Welding, Cutting, and Other Hot Work*.

13.4.1.1 The person designated to be in charge of fire protection shall issue a hot work permit each day that cutting and welding and other hot work operations are being conducted, as required by Section 11.6.

13.4.1.2 At the close of the work day the person responsible for fire protection on the site shall inspect areas where welding and cutting or other hot work operations have been conducted, for hot metal or smoldering combustible materials.

13.4.1.3 Flammable gas cylinders used in the welding or cutting process shall be protected from vehicle damage and high temperatures.

13.4.2 Temporary Heating Equipment.

13.4.2.1 Temporary heating equipment shall be listed for the purpose and used and installed in accordance with the listing.

13.4.2.2 Temporary heating equipment shall comply with NFPA 31, *Standard for the Installation of Oil-Burning Equipment*, NFPA 54, *National Fuel Gas Code*, and NFPA 58, *Liquefied Petroleum Gas Code*.

13.4.2.3 Temporary heating equipment shall be used only on a stable surface in a protected location where they will not be overturned.

13.4.2.4 Portable equipment using oil or liquefied petroleum gas as fuel shall be removed to a well-ventilated area away from combustible materials and allowed to cool prior to refueling.

13.4.2.5 A portable fire extinguisher, listed for the purpose, shall be located within 30 ft (9.1 m) of all portable heating devices.

13.4.2.6 Chimney or vent connectors from direct-fired heaters, where required, shall be maintained at least 18 in. (457 mm) from combustible materials.

13.4.2.7 Temporary heating equipment shall be attended and maintained by trained personnel.

13.4.3 Roofing.

13.4.3.1 General.

13.4.3.1.1 The provisions of this section shall apply to any type of equipment including, but not limited to, chassis-mounted equipment used for preheating or heating tar, asphalt, pitch, or similar substances for roofs, floors, pipes, or similar objects. [**1:**16.7.1.1]

13.4.3.1.2 Operating kettles shall not be located inside of or on the roof of any building. [**1:**16.7.1.3]

13.4.3.2 Tar Kettle Location. The kettle shall be operated in a controlled area. The area shall be identified by the use of traffic cones, barriers, and other suitable means as approved by the AHJ. [**1:**16.7.1.4]

13.4.3.3 Kettle Supervision. [**1:**16.7.1.5]

13.4.3.3.1 An operating kettle shall be attended by a minimum of one employee who is knowledgeable of the operations and hazards. [**1:**16.7.1.5.1]

13.4.3.3.2 The employee shall be within 25 ft (7.6 m) of the kettle and shall have the kettle within sight. [**1:**16.7.1.5.2]

13.4.3.4 Fire Extinguishers for Tar Kettles.

13.4.3.4.1 Two approved 20-B:C fire extinguishers shall be provided and maintained within 25 ft (7.6 m) of the operating kettle. [**1:**16.7.1.6.1]

13.4.3.4.2 Fire extinguishers shall be mounted in an accessible and visible or identified location. [**1:**16.7.1.6.2]

13.4.3.5 Exits.

13.4.3.5.1 Roofing kettles shall not block exits, means of egress, gates, roadways, or entrances. [**1:**16.7.1.7.1]

13.4.3.5.2 Kettles shall not be closer than 10 ft (3 m) from exits or means of egress. [**1:**16.7.1.7.2]

13.4.3.6 Fuel System.

13.4.3.6.1 Fuel containers shall be constructed and approved for the use for which they were designed. [**1:**16.7.2.1]

13.4.3.6.2 Liquefied petroleum gas (LP-Gas) containers, hose, regulators, and burners shall conform to the specifications in Chapter 69 of NFPA 1, *Uniform Fire Code*. [**1:**16.7.2.2]

13.4.3.6.3 LP-Gas cylinders shall be secured to prevent accidental tipover. [**1:**16.7.2.3]

13.4.3.6.4 LP-Gas cylinders, hose, regulators, and burners shall conform to the requirements of Chapter 69 of NFPA 1. [**1:**16.7.2.4]

13.4.3.6.5 Regulators shall be required on any cylinders. [**1:**16.7.2.5]

13.4.3.6.6 Where, in the opinion of the AHJ, there is danger of physical damage to the container, protection shall be provided to prevent such physical damage. [**1:**16.7.2.6]

13.4.3.6.7 LP-Gas containers for roofing kettles shall not be used in any building. [**1:**16.7.2.7]

13.4.4 Plumbing.

13.4.4.1 Plumbing work involving open flames shall be conducted only under the supervision of the person in charge of fire protection and shall require a hot work permit reissued each day.

13.4.4.2 The provisions of 13.4.1 shall apply for cutting and welding operations.

13.4.5 Demolition Work.

13.4.5.1 Gas supplies shall be shut off at a point outside the affected area and shall be capped.

13.4.5.2 Electrical service shall be reduced or eliminated in the affected area.

13.4.5.3 Hot work shall not be permitted in combustible buildings except as outlined in Section 11.6.

13.4.5.4 Fire walls, fire barrier walls, fire doors, and other fire separation assemblies shall have their integrity or operation maintained.

--`,,```,,,,````-`-`,,`,,`,`,,`---

Copyright National Fire Protection Association
Provided by IHS under license with NFPA
No reproduction or networking permitted without license from IHS
Not for Resale

13.4.6 Other Hazardous Operations. The owner or governing body shall conduct a hazard assessment of operations that introduce fire hazards to determine if the risk is consistent with the facility's fire safety objectives.

13.4.6.1 Paint stripping operations involving heat-producing devices shall not be permitted.

13.4.6.2 Floor sander dust accumulation bags shall be emptied into closed metal containers outside of the building before the close of the day.

13.4.7 Electrical.

13.4.7.1 Electrical wiring and equipment shall comply with the requirements of NFPA 70, *National Electrical Code*.

13.4.7.2* Temporary lighting, bulbs, and fixtures shall be installed so they do not come in contact with combustible materials.

13.4.7.3 Circuit breakers for circuits that are not in use shall be shut off and tagged.

13.4.7.4 Temporary wiring shall be removed immediately upon elimination of the need for which the wiring was installed.

13.4.8 Environmental Conditions. Openings in structures susceptible to damage from high winds that could cause skewing and misalignment of the structure, disruption of water supplies, or delivery systems for fire protection shall have secure coverings.

13.5 Fire Resistive Construction.

13.5.1 Walls, horizontal assemblies, opening protectives and similar construction required to comply with provisions of Chapter 8 of *NFPA 5000, Building Construction and Safety Code* shall be given priority during construction.

13.5.2 Fire doors with approved closing devices and hardware shall be installed as soon as practical and before combustible materials are introduced.

13.5.3 Fire doors shall be operable and unobstructed.

13.6 Fire Suppression.

13.6.1 Access.

13.6.1.1 Control Area.

13.6.1.1.1* An approved location at the site shall be designated as a control area and shall be provided with floor plans, utility control plans, emergency contact telephone numbers, labeled keys, and material safety data sheets.

13.6.1.1.2 Where security is of concern, this control area shall be locked.

13.6.1.2 Access for heavy fire-fighting equipment to the immediate job site shall be provided at the start of construction and maintained until all construction is completed.

13.6.1.3 Free access from the street to fire hydrants and to outside connections for standpipes, sprinklers, or other fire-extinguishing equipment, whether permanent or temporary, shall be provided and maintained at all times.

13.6.1.4 Protective pedestrian walkways shall be constructed so as not to impede access to hydrants, fire department connections, or fire-extinguishing equipment.

13.6.1.5 During construction operations, free access to permanent, temporary, or portable fire-extinguishing equipment and systems shall be maintained.

13.6.1.6 At least one stairway shall be provided in usable condition at all times in multistory buildings.

13.6.2 Water Supply. Water for fire suppression shall be available throughout all phases of construction.

13.6.3 Standpipe Systems.

13.6.3.1 New standpipes that are required or existing standpipes in buildings being altered shall be maintained in accordance with the progress of building activity, such that the standpipes are always ready for fire department use.

13.6.3.2 Class I manual dry standpipes shall be permitted where approved by the AHJ.

13.6.3.3 Where required by the responding fire department, hoses and nozzles shall be provided and made ready for use, as either the temporary or permanent water supply becomes available.

13.6.4 Automatic Fire Suppression Systems.

13.6.4.1 Where automatic fire suppression systems are provided, the installation shall be placed in service and monitored as soon as it is practical.

13.6.4.2 Where fire suppression systems existed prior to the rehabilitation project, the system shall be kept in service as long as possible during the rehabilitation work.

13.6.4.3 Where fire suppression systems must be taken out of service for modification, the local fire department shall be notified and the system shall be returned to service as soon as possible.

13.6.5 Portable Fire Extinguishers.

13.6.5.1 Portable fire extinguishers, listed for the purpose, shall be located, mounted, and maintained in accordance with NFPA 10, *Standard for Portable Fire Extinguishers*.

13.6.5.2 At least one approved portable fire extinguisher, listed for the purpose, shall be accessible on each floor near each usable stairway.

13.7 Emergency Communication.

13.7.1 Prior to beginning any renovations or alterations, workers shall be instructed on emergency communications procedures.

13.7.2 A fixed telephone or equivalent method of summoning the fire service shall be provided and available.

13.7.3 The telephone number of the fire service shall be prominently posted on or immediately adjacent to each telephone.

13.7.4 Written instructions that include the following information shall be posted:

(1) Building or site address
(2) Procedures for notification of the local fire service in the event of a fire
(3) Actions for security officers or other staff after notifying the fire service

13.7.5 Upon activation of a fire alarm or other notification device, or identification of an actual fire, personnel shall evacuate the building.

Copyright National Fire Protection Association
Provided by IHS under license with NFPA
No reproduction or networking permitted without license from IHS
Not for Resale

Chapter 14 Inspection, Testing, and Maintenance

14.1* General.

14.1.1 This chapter shall establish the requirements for critical and regular inspection, testing, and maintenance of fire protection features, systems, and devices in historic structures.

14.1.2 Records of inspection, testing, and maintenance activities shall be retained until the occurrence of the next activity and for 1 year thereafter.

14.2 Responsibility.

14.2.1 The responsibility for maintenance of fire protection features, systems, and devices shall be that of the owner or governing body or responsible party of the historic structure.

14.2.2 Inspection, testing, and maintenance shall be implemented in accordance with procedures meeting or exceeding those established in the standard for that type of fire protection feature, system, or device, and shall be in accordance with the manufacturer's instructions.

14.2.3 Personnel who have developed competence through training and experience shall perform inspection, testing, and maintenance of fire protection features, systems, and devices.

14.3 Fire Protection Systems.

14.3.1 Requirements. All fire protection systems shall be inspected, tested, and maintained in full compliance with the manufacturer's recommendations and with the standards identified in Table 14.3.1, as applicable.

Table 14.3.1 Inspection, Testing, and Maintenance Codes and Standards — Fire Protection Systems

Type of System	NFPA Standard
Carbon dioxide	NFPA 12, *Standard on Carbon Dioxide Extinguishing Systems*
Halon	NFPA 12A, *Standard on Halon 1301 Fire Extinguishing Systems*
Dry chemical	NFPA 17, *Standard for Dry Chemical Extinguishing Systems*
Wet chemical	NFPA 17A, *Standard for Wet Chemical Extinguishing Systems*
Water-based	NFPA 25, *Standard for the Inspection, Testing, and Maintenance of Water-Based Fire Protection Systems*
Alarm and detection	NFPA 72®, *National Fire Alarm Code®*
Smoke control	NFPA 92A, *Standard on Smoke-Control Systems Utilizing Barriers and Pressure Differences*
Smoke management	NFPA 92B, *Standard for Smoke Management Systems in Malls, Atria and Large Spaces*
Cooking equipment	NFPA 96, *Standard for Ventilation Control and Fire Protection of Commercial Cooking Operations*
Smoke and heat venting	NFPA 204, *Standard for Smoke and Heat Venting*
Water mist	NFPA 750, *Standard on Water Mist Fire Protection Systems*
Clean agent	NFPA 2001, *Standard on Clean Agent Fire Extinguishing Systems*

14.3.2 Inspection. Inspection activities, frequencies, responsibilities, routines, and reporting procedures shall comply with the standards identified in Table 14.3.1 or other approved standards as applicable.

14.3.3 Testing.

14.3.3.1 Testing activities, frequencies, responsibilities, routines, and reporting procedures shall comply with the standards identified in Table 14.3.1, or other approved standards as applicable.

14.3.3.2 All fire protection systems shall be tested to verify that they function as intended.

14.3.3.3 Test results shall be compared with those of the original acceptance test (if available) and with the most recent test results.

14.3.4 Maintenance.

14.3.4.1 Maintenance activities, frequencies, responsibilities, routines, and reporting procedures shall comply with the standards identified in Table 14.3.1 or other approved standards as applicable.

14.3.4.2 Maintenance shall be performed to keep all fire protection systems operable. Necessary repairs shall be made.

14.3.4.3 As-built system installation drawings, original acceptance test records, and device or equipment manufacturer's maintenance bulletins shall be retained by the fire safety manager to assist in developing and maintaining the inspection, testing, and maintenance standards for all fire protection equipment and systems and components.

14.4 Impairments to Fire Protection Systems.

14.4.1 General. When an emergency or a preplanned impairment takes any fire protection system out of operational service, adequate measures shall be taken during the impairment to ensure that increased risks are minimized and the duration of the impairment is limited.

14.4.1.1 When any fire protection system is out of service for 4 hours or more, the owner or governing body shall notify the fire department and post a fire watch.

14.4.1.2 The fire watch shall be provided with an approved means of notification of the fire department.

14.4.2 Preplanned Impairments.

14.4.2.1 All preplanned impairments shall be authorized in advance of work by the fire safety manager.

14.4.2.2 The fire safety manager shall be responsible for verifying that written procedures for impairments are followed before authorizing a system impairment. *(See 14.4.3.)*

14.4.3 Procedure.

14.4.3.1 A written procedure shall be established and implemented by the owner or governing body to control any emergency or preplanned impairment.

14.4.3.2 The written procedure shall include, as a minimum, the following:

(1) Identification and tagging of all impaired equipment and systems
(2) Inspection/risk evaluation
(3) Identification of extent or expected duration of impairment

Copyright National Fire Protection Association
Provided by IHS under license with NFPA
No reproduction or networking permitted without license from IHS
Not for Resale

(4) Notification of the fire department
(5) Notification of other personnel or organizations as appropriate
(6) Statement of additional measures deemed necessary for the duration of the system impairment
(7) Actions to be taken and notifications to be made when all impaired equipment and systems are restored to operational service
(8) Prior to a preplanned impairment, assembly of all necessary parts, tools, materials, and labor at the impairment site before removing the system or equipment from service
(9) Expedition of all repair work

14.4.4 Restoring Systems to Service. When all impaired systems are restored to operational service, the impairment coordinator shall verify that the following procedures have been completed:

(1) Any necessary inspections and tests required in accordance with 14.3.1 for the fire protection system or equipment involved have been conducted to verify that affected systems and equipment are operational.
(2) Those individuals listed in 14.4.3.2(5) have been advised that protection has been restored.
(3) Impairment tags shall have been removed.

14.5 Heating, Air-Conditioning, and Cooking Equipment.

14.5.1 Heating and air-conditioning systems and cooking appliances shall be maintained in accordance with the manufacturer's specifications and shall comply with NFPA 90A, *Standard for the Installation of Air-Conditioning and Ventilating Systems*, NFPA 90B, *Standard for the Installation of Warm Air Heating and Air-Conditioning Systems*, and NFPA 96, *Standard for Ventilation Control and Fire Protection of Commercial Cooking Operations*.

14.5.2 Heaters and ductwork, including hoods and ducts for ranges, shall be kept free of flammable and combustible deposits.

14.6 Chimneys. Chimneys for active stoves or fireplaces shall be inspected and cleaned annually in accordance with NFPA 211, *Standard for Chimneys, Fireplaces, Vents, and Solid Fuel–Burning Appliances*.

14.7 Electrical Systems. Electrical systems shall be maintained in compliance with NFPA 70, *National Electrical Code*, and the manufacturer's instructions.

14.8 Fire Walls and Fire Barrier Walls. The integrity of fire walls and fire barrier walls shall comply with Chapter 8 of *NFPA 5000, Building Construction and Safety Code*. Openings in such walls shall be protected and maintained in accordance with NFPA 80, *Standard for Fire Doors and Other Opening Protectives*.

14.9 Fire-Retardant-Treated Materials. Applied coatings and treatments shall be maintained in accordance with NFPA 703, *Standard for Fire Retardant–Treated Wood and Fire-Retardant Coatings for Building Materials*.

14.10 Fire Extinguishers. Portable fire extinguishers shall be maintained in accordance with NFPA 10, *Standard for Portable Fire Extinguishers*.

Chapter 15 Special Events

15.1 General. Plans for special events shall be reviewed and approved by the owner or governing body.

15.2 Occupant Loading.

15.2.1 The event coordinator shall ensure that the number of occupants admitted to the building is monitored and controlled so that the occupant load does not exceed the capacity of the means of egress, for the number of exits required by NFPA *101, Life Safety Code*.

15.2.2 Orderly circulation of guests shall be maintained when special events are planned for large groups.

15.3 Egress.

15.3.1 Exits, access to exits, and all other evacuation capabilities shall be maintained.

15.3.2 Tables, plants, stages, or other temporary fixtures shall not visually or physically obstruct an exit, exit sign, or exit access, or reduce the width of an exit passage.

15.3.3* Prior to a performance or event, staff (especially temporary or part-time staff), contractor personnel, attendees, and participants shall be notified of the following:

(1) How fire alarms are annunciated (i.e., audibly, visually, by voice communication, or a combination of these methods)
(2) Locations of exit routes, exits, and assembly points
(3) How to safely evacuate the area

15.3.4* Key staff, including event coordinators, volunteers, and security, shall be familiar with exit routes and shall ensure that exits are obvious, operable, and not blocked or restricted in any way.

15.3.5 Upon activation of the fire alarm, occupants shall be evacuated from the building according to the egress plan.

15.4 Commercial Cooking and Food Service Operations. Cooking and food warming shall be in accordance with Section 11.10.

15.5 Smoking. Smoking shall be prohibited except as provided in Section 11.5.

15.6 Fireworks.

15.6.1 Demonstrations of fireworks shall be held outside the building or structure and shall conform to NFPA 1123, *Code for Fireworks Display*.

15.6.2 Demonstrations of fireworks or other pyrotechnics before a proximate audience shall conform to NFPA 1126, *Standard for the Use of Pyrotechnics Before a Proximate Audience*.

15.7 Combustibles.

15.7.1 Tents and canopies shall be noncombustible or certified as having been treated with an approved fire-retardant coating.

15.7.2 Draperies, bunting, textiles, wood, and miscellaneous support and decorative materials used inside the building shall be noncombustible, impregnated with an approved fire retardant, or treated with an approved fire-retardant coating.

15.8 Electrical Equipment.

15.8.1 Electrical appliances and equipment, including temporary installations, shall be listed, and wiring shall comply with NFPA 70, *National Electrical Code*.

15.8.2 Exposed electrical wiring and extension cords shall not be placed across travel or exit routes.

15.8.3* A licensed or registered electrician shall verify that electrical circuits do not exceed their rated capacity.

Copyright National Fire Protection Association
Provided by IHS under license with NFPA
No reproduction or networking permitted without license from IHS
Not for Resale

Annex A Explanatory Material

Annex A is not a part of the requirements of this NFPA document but is included for informational purposes only. This annex contains explanatory material, numbered to correspond with the applicable text paragraphs.

A.1.1.2 Collections within libraries, museums and places of worship should be evaluated and protected in accordance with NFPA 909, *Code for the Protection of Cultural Resource Properties — Museums, Libraries, and Places of Worship.*

A.1.2 As an example, this code is intended to provide a level of protection that will assist in the following three main categories:

(1) Protect the occupants, a group that is intended to include the staff and the visitors, as well as any outside contract agents who may work in the facility
(2) Protect the contents of the structure
(3) Protect the physical structure itself from the effects of an unwanted fire

In all cases, the protection scheme derived is intended to minimize the intrusion on the historic fabric of the facility.

The U.S. Department of the Interior establishes a list of guidelines and criteria that are typically used by various entities to establish overall objectives for maintaining the fabric of an historic site or structure. *(See Annex N for additional information.)*

A.1.6 A sample ordinance is provided in Annex M.

A.3.2.1 Approved. The National Fire Protection Association does not approve, inspect, or certify any installations, procedures, equipment, or materials; nor does it approve or evaluate testing laboratories. In determining the acceptability of installations, procedures, equipment, or materials, the authority having jurisdiction may base acceptance on compliance with NFPA or other appropriate standards. In the absence of such standards, said authority may require evidence of proper installation, procedure, or use. The authority having jurisdiction may also refer to the listings or labeling practices of an organization that is concerned with product evaluations and is thus in a position to determine compliance with appropriate standards for the current production of listed items.

A.3.2.2 Authority Having Jurisdiction (AHJ). The phrase "authority having jurisdiction," or its acronym AHJ, is used in NFPA documents in a broad manner, since jurisdictions and approval agencies vary, as do their responsibilities. Where public safety is primary, the authority having jurisdiction may be a federal, state, local, or other regional department or individual such as a fire chief; fire marshal; chief of a fire prevention bureau, labor department, or health department; building official; electrical inspector; or others having statutory authority. For insurance purposes, an insurance inspection department, rating bureau, or other insurance company representative may be the authority having jurisdiction. In many circumstances, the property owner or his or her designated agent assumes the role of the authority having jurisdiction; at government installations, the commanding officer or departmental official may be the authority having jurisdiction.

A.3.2.3 Code. The decision to designate a standard as a "code" is based on such factors as the size and scope of the document, its intended use and form of adoption, and whether it contains substantial enforcement and administrative provisions.

A.3.2.5 Listed. The means for identifying listed equipment may vary for each organization concerned with product evaluation; some organizations do not recognize equipment as listed unless it is also labeled. The authority having jurisdiction should utilize the system employed by the listing organization to identify a listed product.

A.3.3.5 Atrium. As defined in NFPA 92B, *Standard for Smoke Management Systems in Malls, Atria, and Large Spaces*, a large-volume space is an uncompartmented space, generally two or more stories in height, within which smoke from a fire either in the space or in a communicating space can move and accumulate without restriction. Atria and malls are examples of large-volume spaces.

A.3.3.6.1 Fire Barrier. A fire barrier, such as a wall or floor assembly, might be aligned vertically or horizontally.

A.3.3.6.2 Smoke Barrier. A smoke barrier, such as a wall, floor, or ceiling assembly, might be aligned vertically or horizontally. A smoke barrier might or might not have a fire resistance rating.

A.3.3.6.3 Thermal Barrier. Finish ratings, as published in the *UL Fire Resistance Directory*, are one way of determining thermal barrier.

A.3.3.8 Building Systems. Building systems include all electrical power services; communication and security services; electrical control systems; HVAC systems; water, steam, wastewater, and drainpipes and services; fire suppression systems including water-based and nonwater-based systems; oil and piped hydraulic and pneumatic systems.

A.3.3.9 Buildings. The term *building* is to be construed as if followed by the words "or portions thereof." Each portion of a building that is separated from other portions by a noncombustible fire wall with a minimum 2-hour fire resistance rating can be considered to be a separate building.

A.3.3.14 Conservation. The four explicit functions of conservation are examination, documentation, preservation, and restoration. Examination is a procedure used to determine the nature, method of manufacture, or properties of materials and the causes of their deterioration. Documentation procedures record the condition of an object before, during, and after treatment and outline, in detail, treatment methods and materials used. Preservation is action taken to prevent, stop, or retard deterioration. The process includes both the stabilization of the condition of a work of art by conservation and the stabilization of the environment surrounding a work of art by preventative conservation methods to minimize the effects of agents of deterioration. Restoration is the reconstruction of missing parts in an effort to recreate the original appearance of a damaged work of art.

A.3.3.15 Cultural Resource Properties. Such properties include, but are not limited to, museums, libraries, historic structures, and places of worship.

A.3.3.18 Design Specifications. Design specifications include both hardware and human factors, such as the conditions produced by maintenance and training. For purposes of performance-based design, the design specifications of interest are those that affect the ability of the building to meet the stated goals and objectives. Additionally, these specifications should also include any special techniques or procedures that might be necessary to minimize intrusion into the historically significant portions of the building.

Copyright National Fire Protection Association
Provided by IHS under license with NFPA
No reproduction or networking permitted without license from IHS
Not for Resale

A.3.3.19 Design Team. The individuals responsible for the governance of the property are essential to this team. Establishing boundaries for the limits of the work or guiding discussions on prioritizing the areas or spaces to be preserved should be based on the significance of the property and needs of the governing body. [***101,*** 2006]

A.3.3.25 Exposure Fire. This term usually refers to a fire that starts outside a building (e.g., wildlands fire, adjacent structure fire, or vehicle fire) and that consequently exposes the building to a fire. [***101,*** 2006]

A.3.3.29 Fire Model. Due to the complex nature of the principles involved, models are often packaged as computer software. Attached to the fire models will be any relevant input data, assumptions, and limitations needed to properly implement the model. [**805,** 2006]

A.3.3.33 Fire Safety Manager. In smaller organizations, this role is permitted to be combined with that of another position or appointment. In larger institutions, the person's responsibilities are permitted to include supervision of other fire protection staff. The authorized person is permitted to be an employee of the institution who has experience with generally accepted fire protection practices. Alternatively, cultural resource facilities or institutions are permitted to designate appropriate outside persons such as consulting fire protection engineers, fire service personnel, insurance company loss control representatives, local code officials, or other individuals with similar fire protection credentials.

A.3.3.36 Fuel Load. Fuel load includes furnishings, interior finish, and trim. [**921,** 2004]

A.3.3.39 Hazardous Area. Examples of hazardous areas include areas in which there is storage or use of combustible or flammable materials; toxic, noxious, or corrosive materials; or use of heat-producing appliances. [***5000,*** 2006]

A.3.3.40 Historic Building. Designation could be in an official existing or future national, regional, or local historic register, listing, or inventory. Properties that meet the criteria for eligibility should be treated as eligible. Properties meeting the criteria for eligibility include buildings in a historic district that are not architecturally distinguished, but whose scale, proportions, materials, and details are consistent with the character of the district.

A.3.3.51 Limited-Combustible Material. Materials subject to increase in combustibility or flame spread index beyond the limits herein established through the effects of age, moisture, or other atmospheric conditions are considered combustible. [**220,** 2006]

A.3.3.57 Objective. Objectives define a series of actions necessary to make the achievement of a goal much more likely. Objectives are stated in more specific terms than goals and are measured on a more quantitative, rather than qualitative, basis. [**472,** 2002]

A.3.3.61 Performance-Based Design Approach. This process allows performance-based documents to be implemented and ensures that their goals are met.

A.3.3.64 Prescriptive-Based Document. Fire safety is achieved by specifying certain construction characteristics, limiting dimensions, or protection systems, without providing a mechanism for how these requirements achieve a desired fire safety goal. Typically these documents do not state their fire safety goals.

A.3.3.68 Proposed Design. The design team might develop a number of trial designs that are evaluated to determine if they meet the specified performance criteria. One or more of the trial designs will be selected from those that meet the performance criteria, for submission to the AHJ as the proposed design.

The proposed design is not necessarily limited to fire protection systems and building features; it also includes any component of the proposed design that is installed, established, or maintained for the purpose of life safety, without which the proposed design could fail to achieve specified performance criteria. In addition, the impact of the proposed design on the historic fabric and character of the building needs to be evaluated. As such, the proposed design often includes emergency procedures, management operational systems, and organizational structures that are necessary to meet the performance criteria specified for the proposed design.

A.3.3.70 Protection. In its broadest sense, protection also includes long-term efforts to deter or prevent vandalism, theft, arson, and other criminal acts against historic resources.

A.3.3.78.2 Fire Scenario. A fire scenario defines the conditions under which a proposed design is expected to meet the fire safety goals. Factors typically include fuel characteristics, ignition sources, ventilation, building characteristics, and occupant locations and characteristics. *Fire scenario* includes more than the characteristics of the fire itself, but it excludes design specifications and any characteristics that do not vary from one fire to another; the latter are called *assumptions*. The term *fire scenario* is used here to mean only those specifications required to calculate the fire's development and effects, but in other contexts, the term can be used to mean both the initial specifications and the subsequent development and effects (i.e., a complete description of fire from conditions prior to ignition to conditions following extinguishment).

A.3.3.83 Special Event. Special events are intended to include events that introduce unusual hazards to the facility. Special events include, but are not limited to, receptions, dinners, private viewings, pyrotechnic displays, exhibits, or fairs.

A.3.3.85 Structure. The term *structure* is to be construed as if followed by the words "or portion thereof." [***5000,*** 2006]

A.4.2.2 Historic buildings, and spaces within these buildings, have a hierarchy of significance. Particularly for those historic buildings of higher significance, including historic house museums, extraordinary attempts should be made to minimize alteration to the original space configurations and the historic design. The relocation of occupants to safe areas should be accomplished in this context.

A.4.3 The primary difference between goals and objectives is that objectives are more specific to the problem being solved or the document being developed. The same goals can be applied to most NFPA documents, while objectives are intended to reflect the nature and intent of a particular document in question.

A.4.3.2.1 Substantial renovation or modification to an existing historic building will often be a difficult challenge. Additional means to minimize alteration of the historic structure should be considered. Such means would include the following:

(1) Presence of a limited amount of combustible material
(2) Installation of active fire protection systems
(3) Reliance on staff members
(4) Any combination thereof

Copyright National Fire Protection Association
Provided by IHS under license with NFPA
No reproduction or networking permitted without license from IHS
Not for Resale

A.4.3.2.4 Where adaptive reuse of a building is being undertaken, there may be fewer changes required in the egress system, fire protection equipment, and other features, for certain new occupancies than for others. Depending upon the significance of various elements to the historic character of the building, life safety and historic preservation goals may be more easily achieved with some new uses than with others.

A.6.1 It is important to control the threat of arson. There are precautions that can minimize the likelihood of a serious fire. The most common fire setters are vandals, disgruntled patrons, and employees. They might break in at night or gain legitimate access during normal operating hours. Arson by far is the leading cause of fire in historic buildings.

General. Experience indicates that if an unsuccessful fire arson has occurred, a repeat attempt is likely, unless the fire setter is brought to justice. The cultural property then becomes a specific target and extra precautions are warranted. These special precautions are itemized as follows as high-risk recommendations:

(1) *Security Recommendations.* Good security is the strongest deterrent to fire setters. The following are suggested elements of a sound security plan:
   (a) Reasonable surveillance, including use of electronic equipment, should be utilized for all areas accessible to the public, with spot checks at regular intervals. All nonpublic areas should have controlled access.
   (b) A background investigation for stability and character should be conducted to the extent legal restrictions allow on potential employees, security personnel, and others having free access to the entire facility.
   (c) All accessible openings, including doors, windows, vents, and so forth, should be properly secured.
      i. Fire exits should be arranged to prevent outside entry.
      ii. Doors and windows should be checked to make sure locks are in good repair.
   (d) Exterior lighting is an effective and often underrated security measure against incendiarists and other miscreants; where not provided by public utilities, lighting should be added at all concealed approaches to the facility.
   (e) A rigid closing procedure, including supervisory responsibility, should be established to ensure that all unauthorized people have left the building, that openings are secured, and that fire hazards, including ashtrays, trash receptacles, and so forth, are checked.
   (f) Book returns should be constructed to prevent the spread of fire and smoke from the return into the rest of the library. (A better alternative could be to eliminate the inside book return and provide an outside receiving bin away from the exterior walls of the library building; many fires have been set in book returns.)

(2) *Recommendations for High-Risk Locations.* A higher level of precaution is essential when any of the following conditions exist:
   (a) High crime rate area
   (b) Cultural properties associated with or connected to social or political causes
   (c) Locations having incurred an incendiary fire or threat of one
   (d) Seriously strained relations between employees and management; the following precautions should be used when a strained employee-management relationship exists:
      i. Provide security/watchman service during idle time or intrusion alarms connected to a reliable, constantly attended location.
      ii. Establish a cooperative liaison with police and fire departments.
      iii. Provide closed circuit television and monitors for remote areas of public access. (The cameras provide a formidable psychological deterrent to fire setters and other wrongdoers.)
      iv. Supplement outside lighting with a 7 ft (2.12 m) wire fence in areas of concealed access to the building.

(3) *Additional References.* Additional information on premises security can be obtained in the following documents:
   (a) NFPA 730, *Guide for Premises Security*
   (b) NFPA 731, *Standard for the Installation of Electronic Premises Security Systems*

A.7.1 This code gives both prescriptive-based and performance-based approaches to achieving its fundamental objectives. Equivalency is also included as an integral concept to achieve compliance. The code, therefore, provides a specific process chapter to guide the user in the code's application and to reduce possible confusion in the reading and implementation of the code.

A.7.2 A process team should be interdisciplinary in nature, representing both safety and preservation concerns. Early consultation and coordination at each step of the process is highly desirable and strongly recommended. While every effort should be made to create an interdisciplinary team of players, the code recognizes that there will be times when such a diversity of members is not possible. The code, therefore, urges but does not require any particular membership of the team. Participants on the team can include the following:

(1) Design professionals
(2) Fire protection consultant
(3) AHJs, including, but not limited to:
   (a) Preservation officer or review agency
   (b) Fire code official
   (c) Building code official or permitting authority
   (d) Insurance company representative/broker
(4) Representative contractor
(5) Building manager
(6) Fire safety manager
(7) Building occupants
(8) Building owner

A.7.3 The assessment is intended to evaluate the relevant historic elements, spaces, and features and the relevant fire safety issues in the building or structure. The extent and depth of the assessment might vary, depending upon the historic significance of the building and its component elements, the size and complexity of the building, changes of occupancy classification, and other factors as appropriate.

A.7.3.1.2 Required exterior modifications or additions should be located on the less visible and least significant elevations in order to keep the impact on the historic character to a minimum. Character-defining features include, but are not limited to, sheathing or facade materials, roofing materials, chimneys, skylights, cornices, windows and doors, and porches and railings.

--`,,```,,,,````-`-`,,`,,`,`,,`---
Copyright National Fire Protection Association
Provided by IHS under license with NFPA
No reproduction or networking permitted without license from IHS
Not for Resale

A.7.3.1.3 The building survey should establish important characteristics of the building organization, building type, style, period of construction, or historic function. The building survey should review significant spaces to establish rooms or other interior locations that are typical of the building type or style or are associated with specific persons or events.

A.7.3.1.6 Character defining features and finishes include, but are not limited to, distinctive architectural details, wainscoting, parquet flooring, picture molding, mantels, ceiling medallions, built-in bookshelves and cabinets, crown molding, and arches, as well as simpler, more utilitarian features, such as plain windows and doors and associated trim.

A.7.3.3.1.3 Both NFPA *101*, *Life Safety Code*, and NFPA 914, *Code for Fire Protection of Historic Structures*, recognize that fully complying with the requirements of any code or standard might not be practicable in a historic building or structure. NFPA 914, *Code for Fire Protection of Historic Structures*, is predicated upon this approach. In addition, NFPA *101*, *Life Safety Code*, also recognizes this potential problem.

The following text is from the 2006 edition of NFPA *101*, *Life Safety Code*:

Historic Buildings. The provisions of this *Code* shall be permitted to be modified by the authority having jurisdiction for buildings or structures identified and classified as historic buildings or structures where it is evident that a reasonable degree of safety is provided. [***101:*** 4.6.3.2]

In existing buildings, it is not always practical to strictly apply the provisions of this *Code*. Physical limitations can cause the need for disproportionate effort or expense with little increase in life safety. In such cases, the authority having jurisdiction should be satisfied that reasonable life safety is ensured. [***101:*** A.4.6.4]

In existing buildings, it is intended that any condition that represents a serious threat to life be mitigated by the application of appropriate safeguards. It is not intended to require modifications for conditions that do not represent a significant threat to life, even though such conditions are not literally in compliance with the *Code*. [***101:*** A.4.6.4]

A.7.5.1 The selection of the method of application of the code could result from a consideration of the following:

(1) Extent of deviation of the building from the prescriptive code
(2) Difficulty in providing remedies to the prescriptive code
(3) Historic significance of features that would be compromised by meeting the prescriptive code

The relative cost of the performance-based and prescriptive-based approaches could also require consideration, as this information might affect the financial means of the building owner to provide code compliance in the building.

The option appraisal and selection portion of the code can function as a tool to assist in selection of a prescriptive-based and performance-based application. A building need not meet both sets of requirements.

A.8.1.1 The three approaches to compliance with prescriptive requirements, alternatives, equivalencies, and modifications are in order of their legal certitude. Therefore, they should be considered in this order to minimize the need for lengthy negotiations or variance hearings. However, early conversations among interested parties can establish an acceptable level of compliance for a particular case.

A.8.1.1.2 Compliance with prescriptive requirements of applicable codes does not always require the construction or installation of intrusive elements or features that might negatively impact the historic fabric of the subject building. Examples of sensitive installations are shown in Annex L.

A.8.1.2 Alternatives refer to options that are explicitly stated in the requirements of the prevailing code. These alternatives are often incorporated into exceptions to specific provisions. A careful reading of the prevailing code could reveal more acceptable options to the standard compliance requirements. Particular attention to alternatives should be given where jurisdictions have adopted model codes but have made exceptions for existing or historic buildings.

A.8.1.3 Equivalency refers to alternative fire safety measures that can be established to provide a level of safety that is equivalent to the prevailing code; for example, installing fire detection and suppression that is not legally required in place of structurally altering the interior of a building. A less common alternative is the compensation for a code deficiency by operational features; for example, compensating for a dead-end corridor with occupant training.

Equivalency is a common code clause that allows other means of compliance if those means can be demonstrated and documented. There are many ways to address the issue of documenting equivalency, such as precedents, *ad hoc* equivalency, fire risk indexing, and component performance evaluation. These ways are explained in order of complexity.

Precedents are continually established in the regulation of fire safety for historic buildings. They represent acceptable alternatives that have not been formally incorporated into a regulatory document. The annexes of this document are a unique source of identifying many of these precedents. Other precedents might be available locally.

Ad Hoc Equivalency can be established by employing subjective logic. One qualitative approach used to evaluate alternative arrangements for equivalent safety from fire is NFPA 550, *Guide to the Fire Safety Concepts Tree*. The tree is a logic diagram that represents all possible means of meeting fire safety objectives. By increasing fire safety measures on one branch of the tree, one can offset a lack of required measures on another branch, thus establishing an arrangement of equivalent fire protection.

Fire Risk Indexing is a method that should be permitted to be used to establish conformance to a prevailing code. This process consists of a multi-attribute decision analysis approach to quantitatively balancing variables of risk, hazard, and safety to achieve an acceptable level of fire safety. Fire risk indexing is a systemic approach to equivalency that considers the building in its entirety and produces a calculated value to identify the degree of compliance with the intent of a prescriptive code.

The following documents have an established record of meeting code objectives through an indexing approach:

(1) Chapters 4 through 9 of NFPA 101A, *Guide on Alternative Approaches to Life Safety*, 2001 edition
(2) *Wisconsin Administrative Code*, Subchapter IV, Building Evaluation Method, Chapter Comm 70–Historic Buildings, 2005.

Performance-based fire safety can also be approached on a component basis rather than on a systemic basis. Some fire safety components already have a form of performance criteria, such as fire resistance. Component performance can also be evaluated on a more ad hoc basis through the use of equiva-

Copyright National Fire Protection Association
Provided by IHS under license with NFPA
No reproduction or networking permitted without license from IHS
Not for Resale

lency clauses in building codes. Codifying more component performance criteria can provide solutions for many problems; for example, establishing measurable fire safety objectives for doors, stairs, fire escapes, dead ends, exit signs, and so forth, would help when dealing with these issues in historic buildings.

A.8.1.3.2 Any departure from the prescriptive code should be shown through adequate documentation to provide an equivalent level of protection. The extent of documentation/analysis required to demonstrate equivalency shall be commensurate with the complexity of the issue.

Equivalent solutions rely on the prescriptive code or standard as a departure point from strict compliance. Identification is made of the areas where the building deviates from the prescriptive requirement, and an equivalent solution is considered for any nonconforming issue. Equivalent solutions continue to work within the framework of the prescriptive code and justify departures from the prescriptive requirements, either individually or collectively, with an alternative acceptable to the AHJs. The code provides extensive annex material in an effort to provide a stronger framework of information to AHJs as they form decisions on proposed equivalent alternatives. The annex material also encourages the identification of still more resources to continue to support AHJs in their role of judging proposed alternatives. Maximum flexibility within the confines of equivalent safety is encouraged at all times.

It is the intent of this code that liberal use be made of the annex material and references in the code as a basis for establishing equivalency. These and other materials, which are commonly consulted to provide documentation for performance-based design approaches, also provide strong guidance and support for equivalency solutions. Other materials and information to be considered can include the identification of precedents and research findings.

The annex material, as well as the referenced documents cited throughout this code can be used as sources of information to evaluate design alternatives. The application of specific information from these or other sources must be demonstrated as sound through the performance-based approach requirements described in Chapter 9 of this code. The annexes and referenced documents are not intended to be exclusive sources of information. Any source of information that can be demonstrated to be credible and valuable to the evaluation of the proposed design can be used in conjunction with this code.

A.8.1.4 In historic buildings, it is not always practical to strictly apply the provisions of the prevailing code. Physical limitations can require disproportionate effort or expense with little increase in life safety. In such cases, the AHJ should be satisfied that reasonable life safety is ensured.

In historic buildings it is intended that any condition that represents a serious threat to life be mitigated by application of appropriate safeguards. It is not intended to require modifications for conditions that do not represent a significant threat to life, even though such conditions are not literally in compliance with the prevailing code. Among the means of reasonably modifying prescriptive requirements are tolerances and waivers.

Tolerances allow for flexibility by relaxing the many "magic numbers" in code requirements; for example, 50 people, 32 in. wide, 1-hour fire resistance, and so forth. Reasonable dimensional tolerances should be permitted in applying prescriptive requirements to historic buildings. A 10 percent to 20 percent tolerance in prescriptive criteria may be reasonable if it allows historic preservation objectives to be achieved. In legal jargon, such tolerances are referred to as *de minimis;* that is, they are considered insignificant with respect to the overall safety of the building. Tolerance in strict application of installation standards can also be appropriate; for example, allowing a particularly sensitive room to remain unprotected in an otherwise fully sprinklered building.

Waivers can be another form of *de minimis* code application. Waivers can be appropriate where applying a code requirement in a historic building is not reasonable; for example, a requirement that all exit doors in historic buildings need to swing outward could be unreasonable for some situations.

A.8.2 The subjects discussed in Section 8.2 are intended to be a partial listing of safety features or beneficial attributes of a historic structure that could help compensate or offset one or more prescriptive code deficiencies. These provisions are not mandatory but should be identified when making an argument for alternative approaches, equivalencies, or modifications to the prescriptive code requirement.

A.8.2(6) Filling concealed spaces with inert materials, such as mineral wool insulation or similar fire-resistive materials, can further retard the spread of fire. Care should be taken to ensure that the introduction of fire barriers or fire stopping does not inadvertently result in a disturbance of the building's microclimate by impeding air flow, which might result in the growth of mold or fungus.

A.8.2(7) The U.S. Department of Housing and Urban Development has developed the *Guideline on Fire Ratings of Archaic Materials and Assemblies* to identify approximate fire resistance qualities of older construction methods.

A.8.2(8) Fire detection systems that can discriminate or identify any number of characteristics of fire (e.g., presence of smoke, critical temperature rise, or infrared/ultraviolet radiation) are also considered to be a compensatory feature. The detection device that offers the fastest response with respect to the type of occupancy should be a primary consideration.

A.9.1 Chapter 9 of this code provides requirements for the evaluation of a performance-based life safety and fire protection design. The evaluation process is summarized in Annex L.

A.9.1.3 Qualifications should include experience, education, and credentials that demonstrate knowledgeable and responsible use of applicable models and methods.

A.9.1.4 A third-party reviewer is a person or group of persons chosen by the AHJ to review proposed performance-based designs.

A.9.1.7 Continued compliance with the goals and objectives of the code involves many things. The building construction — including openings, interior finish, and fire- and smoke-resistive construction — and the building and fire protection systems should retain at least the same level of performance as provided for the original design parameters. Performance designs that include such features related to management operational systems should include specific instructions related to features. The use and occupancy should not change to the degree that assumptions made about the occupant characteristics, combustibility of furnishings, and existence of trained personnel are no longer valid. In addition, actions provided by other personnel, such as event staff or emergency responders, should not be diminished below the documented assumed levels. Also, actions needed to maintain reliability of systems at the anticipated level should meet the initial design criteria.

Copyright National Fire Protection Association
Provided by IHS under license with NFPA
No reproduction or networking permitted without license from IHS
Not for Resale

A.9.2.2.1 Annex H identifies methods that can be used to develop means by which occupants' exposure to untenable conditions can be addressed.

A.9.2.2.2 This evaluation should consider the use of multiple or redundant systems, features, and techniques. Objects or building features, if any, that are deemed acceptable to lose to a fire should be evaluated and determined. The following could be potential areas of evaluation for the design team:

(1) Set detailed performance criteria that would ensure that selected rooms or spaces are protected from flame, heat, or smoke. The *SFPE Engineering Guide to Performance-Based Fire Protection Analysis and Design of Buildings* describes a process of establishing damage limits. The *SFPE Handbook of Fire Protection Engineering* also contains relevant information on thermal damage to various building materials and information on corrosivity of smoke.
(2) Demonstrate for each design fire scenario and the design specifications, conditions, and assumptions, that each room or area will be fully isolated from the fire before the smoke and thermal layer in the room descend to a level where irreversible damage can occur.
(3) Demonstrate for each design fire scenario and the design specifications and assumptions, that the smoke and thermal layer will not descend to a level where irreversible damage can occur in any room. The advantage of this procedure is that it conservatively requires that no historically significant item need be exposed to fire effects for the demonstration, regardless of where that room or space is located.
(4) Demonstrate for each design fire scenario and the design specifications and assumptions, that no fire effects will reach any room or space beyond the room of origin. An advantage of this procedure is that it also removes the need for some of the modeling of fire effects, because it is not necessary to model the filling of rooms, only the spread of fire effects to those rooms. This is even more conservative and simpler than the procedures in A.9.2.2.2(2) and A.9.2.2.2(3), because it does not allow any fire effects into any rooms with historically significant features.

A.9.3.1 This requirement applies both to systems and features, including management operational systems required by the code, that reference applicable standards, and to additional systems or features included in the design at the discretion of the design team. The referenced standards are hereby expected to state maintenance, testing, and other requirements needed to provide positive assurance of an acceptable level of reliability. The referenced standards themselves can be prescriptive- or performance-based.

A.9.3.2 The design should comply with the following requirements for select components in the means of egress. The following components are taken from NFPA *101, Life Safety Code*:

(1) Changes in level in means of egress
(2) Guards
(3) Doors
(4) Stairs
(5) Ramps
(6) Fire escape ladders
(7) Alternating tread devices
(8) Capacity of means of egress
(9) Impediments to egress
(10) Illumination of means of egress
(11) Emergency lighting
(12) Marking of means of egress

A.9.4.1 The design specifications and other conditions form the input to evaluation of proposed designs *(see Section 9.6)*. Where a specification or condition is not known, a reasonable estimation can be made. However, the design team should take steps to ensure that the estimation is valid during the life of the building. Any estimations need to be documented. *(See Section 9.8.)*

A.9.4.3 These characteristics should extend beyond the normal analysis of building construction features. Elements such as the type of construction, construction technique, use of special materials, as well as any unusual design features in the building, should also be explicitly identified.

A.9.4.4 Systems addressed by this requirement include automatic fire suppression systems and fire alarm systems. Performance issues that need to be documented might include response time indexes, discharge densities, and distribution patterns. Calculations should not include an unlimited supply of extinguishing agent if only a limited supply is provided in the actual structure or building.

A.9.4.5.1 Examples of design features that might be incorporated to modify expected occupant characteristics include training, use of staff to assist with notification and movement, or type of notification appliance used.

A.9.4.5.2 The four basic characteristics — sensibility, reactivity, mobility, and susceptibility — comprise a minimal, exhaustive set of mutually exclusive, performance characteristics of people in buildings that can affect a fire safety system's ability to meet life safety objectives. The characteristics are briefly described as follows:

(1) *Sensibility* (to physical cues) is the ability to sense the sounding of an alarm. It can also include discernment and discrimination of visual and olfactory cues in addition to auditory emanations from the fire itself.
(2) *Reactivity* is the ability to interpret cues correctly and to take appropriate action. Reactivity can be a function of cognitive capacity, speed of instinctive reaction, or group dynamics. Occupants might need to understand how relying on familiarity with the premises could influence wayfinding and increased likelihood of a wrong decision.
(3) *Mobility* (speed of movement) is determined by individual capabilities as well as by crowding phenomena such as arching at doorways.
(4) *Susceptibility* (to products of combustion). Metabolism, lung capacity, pulmonary disease, allergies, or other physical limitations can affect survivability in a fire environment.

In application, as with the use of computer evacuation models, assumptions can address a larger number of factors that are components of the basic performance characteristics described in Table A.9.4.5.2.

A.9.4.5.4 The number of people expected to be contained in a room or area should be based on the occupant load factor specified in NFPA *101, Life Safety Code*, or other approved sources.

A.9.4.5.5 For example, in museums, staff characteristics such as number, location, quality, and frequency of training should be considered.

A.9.4.7 Design proposals need to state explicitly any design specifications or estimations regarding building fire safety plans, inspection programs, or other ongoing programs, whose performance is necessary for the building when occupied and operational or when closed after hours, to meet the stated goals and objectives.

Copyright National Fire Protection Association
Provided by IHS under license with NFPA
No reproduction or networking permitted without license from IHS
Not for Resale

Table A.9.4.5.2 Performance Characteristics

Characteristics	Description
Alertness	Awake/asleep, can depend on time of day
Responsiveness	Ability to sense cues and react
Commitment	Degree to which occupant is committed to an activity underway before the alarm
Focal point	Point to which an occupant's attention is focused (e.g., to front of classroom, stage, or server in business environment)
Physical and mental capabilities	Can affect ability to sense, respond, and react to cues; can be related to age or disability
Role	Can determine whether occupant will lead or follow others
Familiarity	Can depend on time spent in building or participation in emergency training
Social affiliation	Extent to which an occupant acts/reacts as an individual or as a member of a group
Condition	Over the course of the fire, the effects — both physiological and psychological — of the fire and its combustion products on each occupant

Programs of interest include any maintenance, training, labeling, or certification programs required to assure operational status or reliability in building systems or features.

A.9.4.9 This requirement includes assumptions about the interrelations between the performance of building elements and systems, occupant behavior, or emergency response actions that conflict with each other. For each fire scenario, care needs to be taken to assure that conflicts in actions do not occur. Typical conflicts could include the following and similar assumptions:

(1) A fire door will remain closed during the fire event to contain smoke, while this same door is used by occupants during egress from the area.
(2) A room door to a historically significant space is closed at all times, yet the door is normally open for public viewing.
(3) Fire apparatus will arrive immediately from a distant location to charge fire department connections to provide water.

For example, an assumption that compartmentation blocking the passage of fire and smoke will be maintained at the door from a historically significant space or to a stairwell cannot be paired with an assumption that evacuation through that door will extend over many minutes.

A.9.4.10 This requirement includes provisions that are in excess of basic requirements covered by referenced codes and standards, typical design requirements, and operating procedures. It includes provisions such as more frequent periodic testing and maintenance to increase the reliability of fire protection systems, redundant systems to increase reliability, on-site staff assistance to enhance detection of fires and aid in fire response procedures, staff training, availability and performance of emergency response personnel, and other factors.

A.9.5.1 Design fire scenarios define the challenge a building is expected to withstand. They also need to define the threat to the historically significant features or attributes of the building. Design fire scenarios capture and limit value judgments on the type and severity of the fire challenge to which a proposed fire safety system needs to respond. The fire safety system includes any or all of the following aspects of the proposed design that are intended to mitigate the effects of a fire:

(1) Egress system
(2) Automatic detection and suppression
(3) Barriers
(4) Staff training
(5) Placement of manual extinguishers

Design fire scenarios come from two sources — those that are specified in paragraphs 9.5.3.1 through 9.5.3.8, and those that are developed by the design team based on the unique characteristics of the building as required by 9.5.2. In most, if not all cases, more than one design fire scenario should be developed to meet the requirements of 9.5.2.

Once the set of design fire scenarios is established — both those specified by 9.5.3.1 through 9.5.3.8 and those that are developed as required by 9.5.2 — they must be quantified into a format that can be used for the evaluation of proposed designs. The *SFPE Engineering Guide to Performance-Based Fire Protection Analysis and Design of Buildings* outlines a process and identifies tools and references that can be used at each step of this process.

A.9.5.2 The protection systems and features used to meet the challenge of the design fire scenario should be typical of, and consistent with, those used for similar areas of the building. The systems and features should not be designed to be more effective in the building area addressed than in similar areas not included in the design and therefore not explicitly evaluated.

A.9.5.3 It is desirable to run a wide variety of fire scenarios to evaluate the complete fire protection and life safety capabilities of the building or structure. Fire scenarios should not be limited to a single or a couple of "worst case" fire scenarios.

The descriptive terms used to indicate the rate of fire growth for the scenarios are intended to be generic. Use of *t*-squared fires is not required for any scenario.

A.9.5.3.2 An example of a Design Fire Scenario 1 for a historic building would involve a public museum or library. A large concentration of occupants could be present. A significant element or feature could be immediately threatened by a fire. This scenario is a cursory example, in that much of the explicitly required information in 9.5.3.1 can be determined from the information provided in the example. Note that it is usually necessary to consider more than one scenario to capture the features and conditions typical of an occupancy.

Copyright National Fire Protection Association
Provided by IHS under license with NFPA
No reproduction or networking permitted without license from IHS
Not for Resale

A.9.5.3.3 Examples of Design Fire Scenario 2 are the following: a fire involving ignition of gasoline as an accelerant in a means of egress, or in renovation materials or other fuel configurations that can cause an ultrafast-developing fire. The means of egress chosen is the doorway with the largest egress capacity among doorways normally used in the ordinary operation of the building. The baseline occupant characteristics for the property are assumed. Such spaces can also contain building materials or features that are historically significant. At ignition, doors are assumed to be open throughout the building.

A.9.5.3.4 An example of a Design Fire Scenario 3 is a fire in a storage or collections room that is adjacent to the largest occupiable room in the building, or that is adjacent to the room or area with the most historically significant content. The contents of the room of fire origin are specified to provide the largest fuel load and the most rapid growth in fire severity and to be consistent with the normal use of the room. The adjacent occupiable room is assumed to be filled to capacity with occupants. Occupants are assumed to be somewhat impaired in whatever form is most consistent with the intended use of the building. The room contains contents that are vulnerable to minor quantities of heat or smoke. At ignition doors from both rooms are assumed to be open. Depending upon the design, doorways may connect the two rooms, or they may connect via a common hallway or corridor.

For purposes of this scenario, an occupiable room is one that contains people (i.e., a location within a building where people are typically found).

A.9.5.3.5 An example of a Design Fire Scenario 4 is a fire originating in a concealed wall- or ceiling-space that is adjacent to a large occupied function room or a room or space containing a special collection, furniture, or works of art. Ignition involves concealed combustibles, including wire or cable insulation and thermal or acoustical insulation. The adjacent function room is assumed to be occupied to capacity. The baseline occupant and building characteristics for the property are assumed. At ignition, doors are assumed to be open throughout the building.

A.9.5.3.6 An example of a Design Fire Scenario 5 is a cigarette fire in a trash can. The trash can is close enough to room contents to ignite more substantial fuel sources but it is not close enough for any occupant to create an intimate-with-ignition situation or close enough to immediately endanger any of the historically significant spaces or objects. If the intended use of the property involves the potential for some occupants to be incapable of movement at any time, then the room of origin is chosen as the type of room likely to have such occupants, and it is filled to capacity with occupants in that condition. If the intended use of the property does not involve the potential for some occupants to be incapable of movement, then the room of origin is chosen to be an assembly or function area characteristic of the use of the property, and the trash can is placed so that it is shielded from suppression systems. At ignition, doors are assumed to be open throughout the building.

A.9.5.3.7 An example of a Design Fire Scenario 6 is a fire originating in the largest fuel load of combustibles possible in normal operation in a function or assembly room, or in a process/manufacturing area, characteristic of the normal operation of the property. The configuration, type, and geometry of the combustibles are chosen so as to produce the most rapid and severe fire growth or smoke generation consistent with the normal operation of the property. The baseline occupant characteristics of the property are assumed. At ignition, doors are assumed to be closed throughout the building.

This category includes everything from a big couch fire in a small dwelling, to a rack fire in combustible liquids stock in a big box retail store.

A.9.5.3.8 An example of a Design Fire Scenario 7 is an exposure fire. The initiating fire is the closest and most severe fire possible, consistent with the placement and type of adjacent properties and the placement of plants and combustible adornments on the property. The baseline occupant characteristics of the property are assumed.

This category includes wildlands/urban interface fires, exposure from fires originating in adjacent structures, and exterior wood shingle problems, where applicable.

A.9.5.3.9 Design Fire Scenario 8 addresses a set of conditions with a typical fire originating in the building with any one passive or active fire protection system or feature being ineffective. Examples in this category include unprotected openings between floors or between fire walls or fire barrier walls, rated fire doors that fail to close automatically or are blocked open, sprinkler system water supply shutoff, non-operative fire alarm system, smoke management system not operational, or automatic smoke dampers blocked open. This scenario should represent a reasonable challenge to the other building features provided by the design and presumed to be available.

The concept of a fire originating in ordinary combustibles is intentionally selected for this event. This fire, although presenting a realistic challenge to the building and the associated building systems, does not represent the worst case scenario or the most challenging fire event for the building.

Examples of fires originating in ordinary combustibles include the following:

(1) *Corridor of a Historic Museum.* Staff is assumed not to close any exhibit space or room doors upon detection of fire. The baseline occupant characteristics of the property are assumed, and the areas or viewing rooms off the corridor are assumed to be filled to capacity with visitors. At ignition, all such doors in the area are not equipped with self-closing devices and are assumed to be open throughout the smoke or fire compartment.
(2) *Large Assembly Room or Area in the Interior of the Building.* The automatic suppression systems are assumed to be out of operation. The baseline occupant characteristics of the property are assumed, and the room of fire origin is assumed to be filled to capacity. At ignition, doors are assumed to be closed throughout the building. A specific or rare collection piece is located in the room of fire origin.
(3) *Unoccupied Small Function Room Adjacent to a Large Assembly Room or Area in the Interior of the Building.* The automatic detection systems are assumed to be out of operation. The baseline occupant characteristics of the property are assumed; the room of fire origin is assumed to be unoccupied, and the assembly room is assumed to be filled to capacity. At ignition, doors are assumed to be closed throughout the building. The room or space is of particular historical significance and is vulnerable to potential damage from an undetected fire.

A.9.5.3.9.2 The exception is applied to each active or passive fire protection system individually and requires two different types of information to be developed by analysis and approved

Copyright National Fire Protection Association
Provided by IHS under license with NFPA
No reproduction or networking permitted without license from IHS
Not for Resale

by the AHJ. System reliability is to be analyzed and accepted. Design performance in the absence of the system is also to be analyzed and accepted, but acceptable performance need not mean fully meeting the stated goals and objectives. It could be impossible for a performance design to meet fully the goals and objectives with the key fire protection system unavailable, and yet no system is totally reliable. The AHJ will determine what level of performance, possibly short of the stated goals and objectives, is acceptable, given the very low probability (i.e., the system's unreliability probability) that this situation will occur.

A.9.6.1 The *SFPE Engineering Guide to Performance-Based Fire Protection Analysis and Design of Buildings* outlines a process for evaluating whether trial designs meet the performance criteria during the design fire scenarios.

Procedures described in Sections 9.2 and 9.4 identify required design fire scenarios within which a proposed fire safety design needs to perform and the associated untenable conditions that need to be avoided in order to maintain life safety. Additionally, these procedures should be used to establish the level of tolerance that specific contents, building features, or both, can sustain without incurring irreparable damage. Annex I discusses methods that form the link from the scenarios and criteria to the goals and objectives.

A.9.6.3.3 Procedures used to develop required input data need to preserve the intended conservatism of all scenarios and assumptions. Conservatism is only one means to address the uncertainty inherent in calculations and does not remove the need to consider safety factors, sensitivity analysis, and other methods of dealing with uncertainty. The *SFPE Engineering Guide to Performance-Based Fire Protection Analysis and Design of Buildings* outlines a process for identifying and treating uncertainty.

A.9.6.4 An assessment method translates input data, which can be test specifications, parameters or variables for modeling, or other data, into output data that is measured against the performance criteria. Computer-based fire models should be evaluated for their predictive capability in accordance with ASTM E 1355, *Standard Guide for Evaluating the Predictive Capability of Deterministic Fire Models.*

A.9.7 See Annex L for additional information on sensitivity and uncertainty analysis and safety factors.

A.9.8.1 The *SFPE Engineering Guide to Performance-Based Fire Protection Analysis and Design of Buildings* describes the documentation that should be provided for a performance-based design.

Proper documentation of a performance-based design is critical to the design acceptance and construction. Proper documentation also assures that all parties involved understand what is necessary for the design implementation, maintenance, and continuity of the fire protection design. If attention to details is maintained in the documentation, there should be little dispute during approval, construction, startup, and use.

Poor documentation could result in rejection of an otherwise good design, poor implementation of the design, or inadequate system maintenance and reliability; and it would provide an incomplete record for future changes or if the design were forensically tested.

A.9.8.2 The sources, methodologies, and data used in performance-based designs should be based on technical references that are widely accepted and utilized by the appropriate professions and professional groups. This acceptance is often based on documents that are developed, reviewed, and validated under one of the following processes:

(1) Standards developed under an open consensus process conducted by recognized professional societies, codes or standards organizations, or governmental bodies
(2) Technical references that are subject to a peer review process and are published in widely recognized peer-reviewed journals, conference reports, or other publications
(3) Resource publications such as the *SFPE Handbook of Fire Protection Engineering* that are widely recognized technical sources of information

The following factors are helpful in determining the acceptability of the individual method or source:

(1) Extent of general acceptance in the relevant professional community. Indications of this acceptance include peer-reviewed publications, widespread citations in the technical literature, and adoption by or within a consensus document.
(2) Extent of documentation of the method, including the analytical method itself, assumptions, scope, limitations, data sources, and data reduction methods.
(3) Extent of validation and analysis of uncertainties. These factors include a comparison of the overall method with experimental data to estimate error rates, as well as an analysis of the uncertainties of input data, uncertainties and limitations in the analytical method, and uncertainties in the associated performance criteria.
(4) Extent to which the method is based on sound scientific principles.
(5) Extent to which the proposed application is within the stated scope and limitations of the supporting information, including the range of applicability for which there is documented validation. Factors such as spatial dimensions, occupant characteristics, ambient conditions, and so forth, can limit valid applications.

In many cases, a method will be built from and include numerous component analyses. These component analyses should be evaluated using the same factors that are applied to the overall method outlined in this chapter.

A method to address a specific fire safety issue within documented limitations or validation regimes might not exist. In such a case, sources and calculation methods can be used outside of their limitations, provided the design team recognizes the limitations and addresses the resulting implications.

The technical references and methodologies to be used in a performance-based design should be closely evaluated by the design team and the AHJ, and possibly by a third-party reviewer. The strength of the technical justification should be judged using criteria presented in A.9.8.2. This justification can be strengthened by the presence of data obtained from fire testing.

A.9.8.11 Documentation for modeling should conform to ASTM E 1472, *Standard Guide for Documenting Computer Software for Fire Models*, although most, if not all, models were originally developed before this standard was promulgated.

A.10.1 A management operational system is a tool whereby those responsible for the fire protection plan can consider personnel as part of the overall fire protection strategy for the building. This approach allows specific directions to be given for needs assessment, from both fire protection and historic preservation standpoints. A management operational system

Copyright National Fire Protection Association
Provided by IHS under license with NFPA
No reproduction or networking permitted without license from IHS
Not for Resale

can be considered in those instances in which the installation of systems or the construction of fire safety features that would otherwise be required would cause unacceptable damage to the historic fabric.

Paragraphs 8.1.3.1 and 9.4.5.5 permit management operational systems controls to compensate for prescriptive solutions as equivalent alternatives or modifications and to be used as part of a performance-based approach to code compliance, respectively. This chapter sets the criteria that needs to be used to design, evaluate, and verify such systems.

This chapter is applicable only to historic buildings having full-time, on-site staff when the building is open to the general public or otherwise occupied. This chapter is also applicable to historic buildings when the process team determines that conformance with at least one of the following prescriptive provisions to which the historic building is subject would result in the following:

(1) Cause unacceptable damage to historic fabric of the building
(2) Create an excessive and unreasonable economic burden
(3) Would not achieve the intended objective of the code
(4) Be physically or legally impracticable
(5) Entail a change so slight as to produce a negligible additional benefit consistent with the purposes of the code

This chapter is applicable to historic buildings when the process team and the design professional responsible for a performance-based design determine that elements described in this chapter are sufficiently reliable to permit their use in the model(s) used.

A.10.2 NFPA 909, *Code for the Protection of Cultural Resource Properties — Museums, Libraries, and Places of Worship*, is intended to apply to culturally significant structures and their contents. As such, it is primarily applicable to staffed buildings that have substantial public visitation. Its requirements thus exceed what would be appropriate for historic buildings that do not have significant contents and little public presence. It should be kept in mind that historic buildings have a broad range in size and occupancy — from private residences to large public assembly uses — with a related range of fire safety issues.

New additions to historic buildings are normally required to be designed in conformance with new construction code requirements. There is no basis for exempting additions based on their historic character, damage to historic fabric, or other factors that may apply to historic buildings.

A.10.2.1 Owners, governing boards, and staffs of historic structures have a significant responsibility for the preservation and protection of property entrusted to their care. Such stewardship might rest with managers, curators, or administrators who are qualified in conservation but have little knowledge or experience in fire safety. Nevertheless, it is the duty of persons responsible for historic structures to manage and operate their buildings to prevent fires, reduce losses, and respond appropriately to emergencies. There is an obligation to ensure that fire hazards are identified and analyzed by qualified staff or consultants and that corrective measures are taken without negative impact on structural integrity. Those in charge need to recognize that there are fire problems inherent in operating a historic structure and that appropriate policies and procedures need to be developed and implemented.

Fire emergency planning responsibilities should include the following:

(1) The facility's governing body or those responsible for the institution should establish and maintain plans and programs to protect against the disastrous effects of fire.
(2) In carrying out this responsibility, a fire risk assessment should be conducted. *(See 5.1.1.1.2 of NFPA 909, Code for the Protection of Cultural Resource Properties — Museums, Libraries, and Places of Worship, for guidance in conducting this assessment.)*

The facility's owner, facility occupants, or both, and the governing body or those responsible for the structure should appoint a fire safety manager who is responsible for the protection of the site from fire. The fire safety manager's duties include responsibility for the following:

(1) Life safety systems
(2) Fire prevention
(3) Fire inspections
(4) Periodic property surveys
(5) Proper operation of fire protection equipment such as fire detection and fire suppression equipment
(6) Portable fire extinguishers

Other duties should include plans review for fire safety of new construction, renovations, or installation of displays or exhibits.

A.10.3 A fire emergency response plan might be included as part of a broader, more comprehensive disaster management program such as that addressed by NFPA 1600, *Standard on Disaster/Emergency Management and Business Continuity Programs*.

A.10.10 When a noncompliance item is revealed, actions that the AHJ can take include revoking approval of the management plan and requiring conformance with the prescriptive provisions of the code to which the building is subject.

Where a compliance audit reveals noncompliance with the approved management plan or changes in the use or arrangement of the building, the AHJ has the authority to set deadlines for compliance and to prohibit occupancy of the building by the public, the staff, and volunteers.

A.10.12 Prior to the opening of the building, the fire safety manager should ensure that all necessary preparatory measures are taken. Items to consider include the following:

(1) Removing all secondary security measures such as chins, bolts, and locking bars from fire exit doors.
(2) Ensuring that there are no faults in the fire protection systems.
(3) All egress routes are free and unobstructed.
(4) All illuminated exit signs are lit.
(5) Portable fire extinguishers that could have been moved are replaced in the correct location.
(6) Security personnel are briefed on any special activities scheduled to take place, such as contractor operations.

Similarly, prior to the closing of the building, the fire safety manager should ensure that all necessary preparatory measures are taken. Items to consider include the following:

(1) Assuring that all interior doors are closed
(2) Checking portable appliances and equipment to ensure that they are turned off
(3) Checking that windows and doors are locked against entry
(4) Ensuring that trash containers are emptied and trash removed from the building
(5) Ensuring that smoking materials are extinguished and removed from the building

Copyright National Fire Protection Association
Provided by IHS under license with NFPA
No reproduction or networking permitted without license from IHS
Not for Resale

A.11.3 A high standard of housekeeping is the most important factor in the prevention of fire. Maintaining this high standard of housekeeping is every employee's responsibility; however, it is the facility director who assumes the final responsibility for this important activity.

A.11.4.5 Such materials could include rags, clothing, and waste material contaminated with oils (such as animal or vegetable oils), paints, thinners, wax, furniture polish, as well as other liquids or compounds.

A.11.4.8.1 Combustible packing materials include materials such as shredded paper, Styrofoam packing material (peanuts), plastic, and excelsior.

A.11.7.2 Arc-fault circuit-interrupter (AFCI) devices should be installed on all existing branch circuits rated at 15 and 20 amps. NFPA 70B, *Recommended Practice for Electrical Equipment Maintenance*, includes good practice and recommendations that can be applied to routine maintenance of most types of electrical equipment and devices.

A.13.4.7.2 Use of fluorescent lighting should be encouraged to avoid fire hazards associated with hot lamps coming in contact with combustible materials and being improperly stored after use.

A.13.6.1.1.1 Where security is of concern, a lockbox should be provided for this information.

A.14.1 Applicable NFPA standards establish minimum inspection and testing frequencies, responsibilities, test routines, and reporting procedures for each type of system.

A.15.3.3 Fire alarms are annunciated audibly or visually; by voice communication or by a combination of these methods.

A.15.3.4 Event staff include personnel such as event coordinators and volunteers.

A.15.8.3 In those jurisdictions where formalized programs are in place, licensed or registered electricians should be utilized to complete the work. Using contractors with experience and knowledge of NFPA 70, *National Electrical Code*, can help to greatly reduce the chance of fire ignition from electrical wiring and components.

Copyright National Fire Protection Association
Provided by IHS under license with NFPA
No reproduction or networking permitted without license from IHS
Not for Resale

Annex B Planning and Design Appraisal

This annex is not a part of the requirements of this NFPA document but is included for informational purposes only.

B.1 Objectives in Rehabilitation Planning. The primary fire protection objective in rehabilitation planning is to achieve the best protection program for the historic building while maintaining its historic integrity and character. Because of the unique character of each historic structure, achieving this objective necessitates an understanding of historic preservation and fire protection concepts.

B.1.1 Historic Preservation. Historic buildings should be treated with the sensitivity prescribed by conventional historic preservation criteria and standards.

B.1.2 Secretary of the Interior's Standards. See Annex N for the U.S. Secretary of the Interior's guidelines for rehabilitation and operation of historic sites.

B.2 Administrative and Review Requirements.

B.2.1 Historic Preservation. Depending on funding sources and federal, state, or local legislation, review by state or federal preservation offices of local historic review commissions might be required to ensure that the historic building is treated with sensitivity. Projects should be discussed with the appropriate preservation authorities as early as possible in the planning stages.

B.2.2 Code Enforcement. Proposed rehabilitation projects should be discussed with the appropriate building and fire code officials as early as possible in the planning stages to determine if code or safety conflicts exist. Many codes have special provisions for historic buildings and for the consideration of alternative methods or systems that will provide levels of safety equivalent to those required for new construction *(see* NFPA *101, Life Safety Code)*. In some cases, special appeal or variance boards exist and should be requested to address those situations where fire safety and protection concerns and historic preservation goals cannot be resolved acceptably by the standard review process. Most building code officials are willing to work with owners, architects, and engineers and to consider alternative construction methods, provided a reasonable or equivalent level of life and property protection is proposed.

B.3 Concepts of Fire Safety Planning.

B.3.1 Management Responsibility. The key to any successful fire protection program lies in the effort extended by the management. Without the active participation and direction of high-level management, the effectiveness of the fire protection will be seriously hindered. This is true in an operational facility as well as in a facility undergoing rehabilitation.

Fire safety is an essential and permanent part of historic structure operations and should be a key consideration when that structure is scheduled for rehabilitation. Owners and others entrusted with the management or operation of buildings having historic significance have prime responsibility for ensuring that the historic structure is protected against the disastrous effects of fire.

Using advice from qualified fire safety professionals *(see Annex E, Resources for Protection of Cultural Resource Property Projects)*, the management team should develop fire safety objectives and a fire safety plan for the complete facility. As part of this plan, the management should decide how the building, its contents, and the occupants are to be protected during the rehabilitation process as well as when it is completed.

Regardless of the complexity or size of the project, management should collaborate with preservation architects, structural engineers, fire protection engineers, fire service representatives, risk management specialists, and others with experience and expertise in the design of fire protection systems and the historic building interface.

B.3.2 Elimination or Control of Fire Safety and Life Safety Hazards. The planning process for the rehabilitation of a historic structure should include provisions to control hazards that are not an inherent part of the historic fabric of the structure or its operation. Fire safety problems identified in the evaluation of existing conditions *(see Chapter 7)* should be ranked by priority to help identify the most undesirable conditions. These hazards might include life safety issues, such as exit facilities, as well as fire ignition and material combustibility considerations. Every effort should be made to eliminate as many identified hazards as possible.

Where a specific hazard is an essential part of the historic fabric of the building, the threat to the building and contents should be controlled by providing special protection for the hazard. The approach taken can use any or a combination of the options discussed in Section 7.4.

As part of the elimination and control of fire hazards, a planned rehabilitation should be based on the building's inherent fire safety features and should not introduce new fire hazards. Alterations might change the conditions that previously have kept the building fire safe.

B.4 Elements of a Fire Safety Plan.

B.4.1 Management Involvement. Management involvement in fire safety planning is critical to successful program implementation. Management should consider the following four steps to ensure the fire safety of the historic property, both during and after the rehabilitation process:

(1) Evaluate fully the existing conditions of the building.
(2) Educate and train appropriate personnel in the importance and implementation of a sound fire prevention program and provide or have available trained, properly equipped fire-fighting and salvage organizations.
(3) Institute management and operation practices that eliminate the cause of fire, both during and after the planned rehabilitation. Construction contracts should specify methods of control of combustibles and hazards, including measures such as those provided in NFPA 241, *Standard for Safeguarding Construction, Alteration, and Demolition Operations*.
(4) Incorporate appropriate fire protection measures in the rehabilitation effort to limit damage if a fire occurs; appropriate measures include structural compartmentation, automatic detection and alarm, and fixed extinguishing systems.

B.4.2 Prevention.

B.4.2.1 General. During planning for the rehabilitation of a historic building, great care should be exercised to provide for the abatement of fire hazards throughout the construction period and following rehabilitation.

B.4.2.2 Design. To reduce the possibility of fire, existing fire safety standards such as NFPA 70, *National Electrical Code*, and other NFPA and industry standards should be consulted during the design of electrical, mechanical, and similar systems.

B.4.2.3 Education and Training. For buildings that will be occupied during the rehabilitation process, staff members should be

Copyright National Fire Protection Association
Provided by IHS under license with NFPA
No reproduction or networking permitted without license from IHS
Not for Resale

instructed to identify obvious fire hazards and to report them to a designated individual. Staff members also should receive hands-on training in the use of the fire suppression equipment provided. They should be instructed to report a fire and to evacuate the area before attempting to extinguish the fire. If this level of training is not practical for the entire staff, specific staff members should be designated for such training.

A fire response team or floor marshal plan can help organize specific staff members to react quickly to any fire emergency. Team members should be kept apprised of the rehabilitation work in progress and the possible hazards that will be introduced or will arise during construction.

B.4.2.4 Operation and Maintenance. Special precautions should be taken during the demolition and construction processes necessary to complete the rehabilitation project. *(See Chapter 7 for a discussion of specific hazards and processes.)*

B.4.2.5 Enforcement. The responsibility for enforcement of fire prevention measures should be clearly assigned and should include enforcement of the construction contract requirements relating to fire perils. Authority should be given to stop work pending correction of flagrant abuses. Responsible local authorities, such as fire and building departments, should be consulted.

B.5 Limited Combustibility.

B.5.1 Construction Materials. Careful consideration should be given to the use of fire-resistive materials and methods wherever they will not damage the structure's historic character. Use of these materials is especially important in concealed areas and other areas not exposed to the public.

Inert or fire-resistive materials should be used where appropriate, including in some cases where the structure is to be substantially rebuilt or where items used in original construction are unavailable. Ingenuity can inspire the selection of fire-safe components that simulate wood roofing and numerous other products. In some instances, the use of substitute materials for original wood might be appropriate. For example, rough-sawn wood can be duplicated in appearance by casting concrete in a mold or form that bears the marks that are desirable on the surface of the finished product, or wood shingles can be easily simulated with fire-resistant materials. Wood siding, wood shingles, and shakes that have been given a fire-retardant treatment are commercially available. Wood frame structural members and siding materials can be protected with spray-applied coatings or membrane-applied protection to enhance the fire resistance of the materials or assemblies where properly maintained. Even if community fire regulations and codes do not require the use of such materials, they should be considered.

Mechanical systems should be designed to minimize the use of combustible materials or lubricants. Noncombustible insulation materials should be used where such materials are to be installed.

Scaffolding and forms should be of noncombustible materials. Where noncombustible materials cannot be substituted, scaffolding and form lumber should be fire-retardant treated. Tarpaulins, if used, should be fire-retardant treated.

B.5.2 Interior Finish Materials. Choice of furnishings and interior finishes should be given careful consideration. For example, where highly combustible wood veneer paneling needs to be replaced, it might be appropriate to substitute a fire-resistive product. Fire-retardant-treated wood products used as interior finishes are readily available. Fire-resistant carpeting is available, and draperies of glass fiber or other fire-resistive materials should be considered.

Coatings are available that effectively reduce the surface flamespread rating of many combustible materials. Although they do not render a material noncombustible, they significantly reduce the ease with which a material ignites. Such coatings should be considered whenever a noncombustible substitute is either unavailable or not suited to a particular application. Caution is necessary to avoid a coating that contains a chemical or other product that will damage or unacceptably alter the appearance of any historic material to which it is applied.

B.5.3 Furnishings and Contents. Noncombustible materials should be used as much as possible for furnishings and other contents of the building. Where the intended occupancy of the building introduces combustible contents for which there are no substitutes, the building's fire loading should be considered when fire suppression systems are designed.

B.6 Compartmentation.

B.6.1 Horizontal Fire and Smoke Barriers. The planning for the rehabilitation of a historic structure should consider the use of fire-rated walls and doors to subdivide building areas into separate fire areas and to segregate specific hazards, such as furnaces, boilers, or storage areas, from the remainder of the building. These fire-rated barriers should be designed to resist the passage of smoke. Other walls also should be designed to resist smoke passage and to confine the effects of a fire where possible. Such designs often can work to resist smoke passage and to confine the effects of a fire. Such designs often can be incorporated while maintaining the historic fabric and character of the structure.

B.6.2 Vertical Enclosures. Provisions should be made to enclose stairways, ventilation shafts, and other vertical openings with fire-rated construction to prevent the vertical spread of fire and smoke. Where the historic fabric of the building prevents such enclosures, alternative protection, such as sprinkler systems, should be provided.

B.6.3 Firestops. Firestops should be provided in concealed spaces to prevent the spread of fire within walls and between rafters and floor joists. Filling concealed spaces with inert material, such as mineral wool insulation or other similar fire-resistive materials, can further retard the spread of fire.

B.7 Structural Protection. The existing structural fire resistance should be determined wherever possible. For older structures, the U.S. Department of Housing and Urban Development has developed the Guideline on Fire Ratings of Archaic Materials and Assemblies *(see Annex O)*, in their series of rehabilitation guidelines, to assist in identifying approximate fire resistance qualities of older construction methods and materials.

Wherever possible, new materials to be installed should be selected based on their ability to enhance the fire resistance of the basic structure. Gypsum wallboard, plaster, and other finish materials can improve the fire resistance rating of structural members if applied correctly.

Various types of fire detection and signal systems are described in Table D.2(a) through Table D.2(d).

B.8 Fire Detection Systems. Various automatic fire detectors can detect a fire condition from smoke, a critical item or rate of temperature rise, or infrared or ultraviolet radiation from the fire. These detectors can provide the warning needed to get people safely out of the structure, notify the fire department, and

Copyright National Fire Protection Association
Provided by IHS under license with NFPA
No reproduction or networking permitted without license from IHS
Not for Resale

start fire-extinguishing action promptly. In buildings with automatic sprinkler systems, the fire detection system can provide a window of time for manual suppression by building occupants before detection and suppression by the automatic sprinkler(s) directly above the fire. Appropriate specialists should be consulted to determine which kinds of detectors best fit the conditions in different parts of the structure. *(See Annex E, Resources for Protection of Cultural Resource Property Projects.)*

Where it is determined that it is desirable to provide an opportunity for building occupants to employ manual fire suppression before any sprinklers over the fire open, a separate early warning fire detection system should be considered that utilizes the detection device providing the fastest response with respect to the type of fire expected from combustibles in the occupancy.

Installed detection and alarm systems should not only sound an alarm within the structure but also transmit a signal to an alarm monitoring service or to a local fire department. Subsequent to an alarm, the fire department should be contacted immediately to verify that the alarm was received.

B.8.1 Fire Detectors. Fires produce heat, smoke, flame, and other signatures that detection systems recognize and to which they respond. Fire detectors are most typically designed to detect fire at a specific point in space (i.e., spot detectors), requiring a number of properly located units to cover a large area. Linear or line-type detectors (i.e., wires, pneumatic tubes, and photoelectric beams) often can be arranged to provide automatic detection less obtrusively and in unusual configurations. *[See Table D.2(a) through Table D.2(d).]*

B.8.2 Heat Detectors. Heat detectors are designed to respond when the operating element reaches a predetermined temperature (i.e., fixed-temperature detector), when the temperature rises at a rate exceeding a predetermined amount (i.e., rate-of-rise detector), or when the temperature of the air surrounding the devices reaches a predetermined level regardless of the rate of temperature rise (i.e., rate compensation detector). Heat detectors respond best to relatively large, high heat–producing fires.

B.8.3 Smoke Detectors. In almost every structural fire, measurable amounts of smoke are produced prior to measurable amounts of heat. Thus, smoke detectors are preferred for earlier warning of fire. Smoke detectors respond to the visible or invisible particulate matter produced in fires. Smoke detectors are available for spot placement, line-of-sight linear beam, and air sampling aspiration applications.

B.8.4 Manual Alarm Boxes. In some instances, a person discovers a developing fire prior to automatic detector operation. Manual alarm boxes should be provided to permit such a person to activate the building fire alarm system.

B.8.5 Applications. The primary function of an automatic detection system is to alert the occupants of a building to the presence of a fire. This can be especially important under the following conditions:

(1) Large buildings where persons in one part of the building are not aware of a fire in another part
(2) Buildings where a fire starts in an unoccupied area
(3) Occupancies where there are a large number of people and significant time is required to evacuate
(4) Situations where there are relatively long travel distances to exits
(5) Buildings where the nature and arrangement of fuel make a fast-growing fire possible
(6) Buildings that do not have sufficient barriers to limit the spread of fire and smoke
(7) Residential occupancies

Automatic fire detection also performs the function of initiating the process of fire suppression by alerting trained occupants or the municipal fire service. Before any suppression can begin, a fire needs to be detected and suppression activated. This can be accomplished on site by individuals trained in the use of fire extinguishers or by a properly equipped and staffed fire department. Fire size at detection affects the ability of manual suppression to activate.

B.8.6 Design Considerations. Expected fire size should be considered in the design of a fire detection system. *(See NFPA 72, National Fire Alarm Code.)*

Where ceilings are 20 ft (6.1 m) or greater in height, it is imperative that engineering assistance be obtained. *(See Annex E, Resources for Protection of Cultural Resource Property Projects.)*

The design of fire detection systems also should consider normal combustion processes in the occupancy, to minimize false alarms. Attention should be given to activities that normally produce products of combustion (e.g., food preparation, automobile parking, smoking, steam, or aerosols).

Generally, system design should include detection throughout the entire building. Partial protection can result in a delayed response to a fire, causing larger losses.

B.9 Fire Extinguishment.

B.9.1 General. An essential element in any fire safety plan is consideration of the means available to suppress a fire once it has begun. Management needs to make critical decisions as to the type of fire suppression capability that is provided in the building. Immediate response by operation of an automatic extinguishing system can be crucial in minimizing the damage to historic structures and their contents. Response by trained building personnel with appropriate extinguishing equipment also can minimize damage to historic structures and their contents. Operation of any of these systems should cause activation of an alarm at a constantly attended location or activation of the building alarm system as described in NFPA *101*, *Life Safety Code*. The provision of these systems is equally important both during the rehabilitation process and afterward.

B.9.2 Automatic Fire-Extinguishing Systems.

B.9.2.1 General. Automatic fixed fire-extinguishing systems are the most effective means of suppressing fires in buildings, and their use in historic buildings is recommended. They should be installed carefully to avoid damage to architectural and historic features and spaces.

Without some type of automatic extinguishing system, a fire will only increase in intensity until the fire department arrives. At that time, the fire department is faced with extinguishing a much larger fire than would have existed if an automatic extinguishing system had activated, and the damage resulting from extinguishing the fire in this manner would be substantially greater. For example, a fire department using one or more hose lines inside a building is capable of delivering water at a rate of 250 gal/min (946 L/min) per hose. Automatic sprinkler systems typically discharge water at a rate of 15 gal/min to 25 gal/min (57 L/min to 95 L/min) per sprinkler.

In general, it is considered good engineering practice to utilize total flooding gaseous systems only in combination with automatic sprinkler systems, rather than as an alternative. *[See the NFPA Fire Protection Handbook; also see comparative*

Copyright National Fire Protection Association
Provided by IHS under license with NFPA
No reproduction or networking permitted without license from IHS
Not for Resale

design attributes in Table D.2(a) through Table D.2(d).] The combination of a total flooding gaseous system with an automatic sprinkler system provides a higher probability of confining fire growth to an area less than that typically covered by one sprinkler [e.g., 100 ft^2 (9.3 m^2)]. The total flooding gaseous system becomes a reliable substitute for manual suppression in the window of time between early warning detection and sprinkler operation.

The discharge of gaseous agents and dry chemicals is governed by automatic controls using smoke or heat detection devices. The various types of automatic extinguishing systems are described in Table D.2(d).

B.9.2.2 Automatic Sprinkler Systems. An automatic sprinkler system consists of a network of piping with sprinklers uniformly spaced along the piping to provide protection to a specified area or building. Water is supplied to the piping from a supply system, such as a municipal or private water distribution system. Effective operation is dependent on an adequate and dependable water supply.

Different types of sprinkler systems can be designed for specific areas. These include wet-pipe systems, dry-pipe systems, preaction systems, and deluge systems; all are discussed in Table D.2(d). Systems vary in method of operation and whether or not water is normally in the piping system. In most systems, only those sprinklers that are heated to the predetermined temperature operate; sprinklers in other areas remain closed. Typically, most fires are controlled by the operation of fewer than five sprinklers.

The potential for water damage from automatic sprinklers is often misunderstood. Some water damage occurs when sprinklers operate to control a fire. However, this damage is usually minimal compared to the amount of damage the fire would have caused if the sprinkler system had not controlled or extinguished it. Reports of water damage in sprinklered buildings are often exaggerated in comparison to the small amount of fire damage resulting from successful fire control by the sprinklers. Automatic sprinkler systems should be installed in accordance with NFPA 13, *Standard for the Installation of Sprinkler Systems.*

B.9.2.3 Halon 1301 Total Flooding Systems. Halon 1301 is a colorless, odorless, electrically nonconductive gaseous agent that leaves no residue and requires no agent cleanup after discharge.

Halon 1301 extinguishing systems have been designed to protect rooms or other enclosures. They were often used successfully to protect occupancies with high-value contents susceptible to damage by other types of extinguishing agents.

Because of the deleterious effect that Halon 1301 and other chlorofluorocarbons (CFCs) have on stratospheric ozone, international agreements and the U.S. Environmental Protection Agency (EPA) have banned production of CFCs. However, Halon 1301 continues to be available for essential uses (for both new systems and for refilling existing systems) through recycling from nonessential uses. It is important that existing systems be serviced and maintained on a regular basis to avoid accidental discharges. Nevertheless, as reserves of Halon 1301 become scarce, this agent can be expected to become too expensive for most applications.

B.9.2.4 Carbon Dioxide Systems. Carbon dioxide extinguishes a fire by lowering the oxygen level below the 15 percent necessary for flame production. Personnel need to be evacuated before agent discharge to avoid suffocation and reduced visibility during and after the discharge period. Carbon dioxide systems should not be used in normally occupied areas.

B.9.2.5 Clean Agent Systems. Clean gaseous agents are electrically nonconductive, volatile gaseous fire extinguishants that do not leave a residue upon evaporation. These agents have been approved by the EPA as a substitute for Halon 1301. Clean agent systems consist of a supply of extinguishant in one or more containers and a nozzle(s) strategically placed in (throughout) the protected, enclosed space. The containers can be centrally located and connected to the nozzle(s) by a piping network or placed at various locations in or near the hazard, with each container connected directly to its nozzle or piped to one or more nozzles. The types of nozzles selected and their placement should be such that force of discharge will not adversely affect the building or room contents.

To be effective, most of these agents need to be tightly contained within the room being protected. The designer of the system needs to determine the extent of the protected volume's intensity. Clean agents are best suited for protecting the sensitive and delicate contents of a room, not the building structure. Total flooding fixed systems using gaseous agents depend on achieving and maintaining the concentration of the agent needed for effective extinguishment. Openings in the compartment (e.g., open windows or doors or ventilation systems that continue to operate) can prevent the achievement of an effective extinguishing agent concentration. Where a high reliability of operation is needed for protection of high-value collections, a backup system, such as an automatic sprinkler system in combination with a total flooding gaseous agent system, should be considered. The new clean agents, while similar to Halon 1301, may not be compatible with existing containers and other components.

It is good fire protection design practice to utilize total flooding gaseous systems in combination with, rather than as an alternative to, automatic sprinkler systems. *[See the NFPA Fire Protection Handbook; also, see comparative design attributes in Table D.2(d).]* The combination of a total flooding gaseous system with an automatic sprinkler system provides a higher probability of confining fire growth to an area less than that typically covered by the operation of one sprinkler [e.g., 100 ft^2 (9.3 m^2)]. The total flooding gaseous system becomes a reliable substitute for manual suppression in the window of time between early warning detection and sprinkler operation. Human response (e.g., occupant manual extinguishing action) is the least reliable means of fire suppression, especially considering those periods when the building is not occupied and is most vulnerable.

Explicit warning information and instructions for building occupants should be conspicuously posted. Similar precautions could be needed for other special extinguishing systems.

Clean agent systems are described in NFPA 2001, *Standard on Clean Agent Fire Extinguishing Systems.*

B.10 Manual Fire-Fighting Capability.

B.10.1 Portable Fire Extinguishers. Portable fire extinguishers are important items of fire protection equipment and should be installed in accordance with NFPA 10, *Standard for Portable Fire Extinguishers.* Portable extinguishers allow the use of a limited quantity of extinguishing agent on a small fire at the moment the fire is discovered and, therefore, should be available in adequate numbers.

The extinguishers should be the type intended for the class of fire anticipated. Multiclass portable extinguishers are available that remove any doubt regarding the correct extinguisher to be used. Extinguishers should be properly located and inspected regularly so that they are in working order

Copyright National Fire Protection Association
Provided by IHS under license with NFPA
No reproduction or networking permitted without license from IHS
Not for Resale

when needed. Personnel should know the locations of the extinguishers and should be instructed in their use. It needs to be emphasized that the use of fire extinguishers should not delay the transmission of alarms to the fire department.

The selection and use of portable extinguishers should include the following health and safety considerations:

(1) Gaseous agent–type extinguishers contain agents whose vapors can be toxic and whose decomposition products can be hazardous. Where these extinguishers are used in unventilated spaces, such as small rooms, closets, motor vehicles, or other confined spaces, operators and others should avoid breathing the gases produced by thermal decomposition of the agent. As in the case of total flooding gaseous suppression systems, production of halogenated extinguishing agents for portable extinguishers terminated on January 1, 1994, due to their ozone-depleting properties.
(2) Carbon dioxide extinguishers contain an extinguishing agent that does not support life when used in sufficient concentration to extinguish a fire. The use of this type of extinguisher in an unventilated space can dilute the oxygen supply. Prolonged occupancy of such spaces can result in loss of consciousness due to oxygen deficiency.

(See NFPA 10, Standard for Portable Fire Extinguishers, for other health and safety considerations.)

B.10.2 Standpipe and Hose. Where standpipes and hose lines are required or installed to provide reliable and effective fire streams in the shortest possible time, they should be installed in accordance with NFPA 14, *Standard for the Installation of Standpipe and Hose Systems*. Training and skill in the use of hose streams are essential to avoid injury and unnecessary property damage. Building occupants should not attempt to use fire hose unless they have been properly trained in accordance with safety recommendations and regulations (e.g., OSHA). It should be emphasized that the use of standpipe hose lines, as with the use of fire extinguishers, should not delay the transmission of alarms to the fire department. A waterflow alarm should be provided on a wet standpipe system.

B.10.3 Hydrants and Outside Protection. Where a municipal water system is part of a private water system with sufficient capacity and where pressure is available, fire hydrants should be provided to enable the fire department to quickly connect its pumpers and to lay hose lines to the building. Where possible, hydrants should be provided on all sides of the building. Care should be taken to avoid placing hydrants too close to the building so the fire department is not prevented from using a hydrant due to fire exposure from the building.

Copyright National Fire Protection Association
Provided by IHS under license with NFPA
No reproduction or networking permitted without license from IHS
Not for Resale

Annex C Survey Criteria for an Historic Structure

This annex is not a part of the requirements of this NFPA document but is included for informational purposes only.

C.1 Introduction. Providing adequate fire protection to a historic building while protecting historic character can be a difficult task. The effort requires a thorough building survey by qualified professionals to identify critical historic elements, spaces, and features; restoration and preservation objectives; code deficiencies; and existing fire and life safety hazards. This survey provides the basis for all planning and design decisions and is essential for rehabilitation projects of all types, including those intended for original or existing uses and those that involve new uses.

C.2 Identification of Historic Elements, Spaces, and Features.

C.2.1 Exterior. Exterior historic elements consist of those features outside the building that define the structure's character. These elements include the building's exterior construction, adjacent structures, and the site grounds.

C.2.1.1 Construction Features. Construction features include sheathing or facade materials, roofing materials, chimneys, skylights, cornices, windows and doors, and extensions such as porches, railings, and other attached building components. Major and minor facades should be studied so that, if exterior modifications or additions are necessary, they can be located on the least visible and least significant elevation in order to keep the impact to a minimum.

C.2.1.2 Adjacent Structures. Adjacent structures are those independent buildings and edifices that could have an effect on the historic building's mission and could affect or be affected by fire safety improvements. These structures could be part of or independent of the historic building site. Adjacent structures could include buildings, sheds, vehicles, and displays.

C.2.1.3 Site Elements. Site elements include exterior components that help define the historic building. These elements could affect or be affected by fire safety improvements. Site elements include vegetation, roads and driveways, walking paths, fencing, and exterior use.

C.2.2 Interior. Interior historic elements consist of those features within the building that are important in and of themselves, in conjunction with other features, or both. These elements include construction features, floor plans, and individual spaces.

C.2.2.1 Construction Features. Construction features are distinctive architectural details of significant form or historic function that are characteristic of the period. Historic fabric and spaces include those original to the building and changes to originals that have acquired significance in their own right. Specific elements can include wainscoting, parquet flooring, picture molding, mantels, ceiling medallions, built-in bookshelves and cabinets, crown molding, and arches, as well as simpler, more utilitarian features, such as plain windows and doors and associated trim. The significance of some architectural features could be that they are worked by hand, exhibit fine craftsmanship, or are particularly characteristic of the building style.

Some features can indicate later changes and alterations that have gained significance over time, such as lobby alterations, changes to wall and floor finishes, and later millwork.

C.2.2.2 Floor Plans. Floor plans can be an important characteristic of the building type, style, period of construction, or historic function. Even if the plan has been altered over time, it can have historic significance. For example, alterations that are additive (e.g., large rooms have been divided into smaller ones) rather than subtractive (e.g., walls have been removed) might be easily corrected to restore the building's integrity.

C.2.2.3 Individual Spaces. Significant spaces are rooms or other interior locations that are typical of the building type or style or are associated with specific persons or events.

The sequence of consciously designed spaces could be important to the understanding and appreciation of the building or original architecture. Examples of consciously designed spaces are a foyer opening into a large hall, front and rear parlors connected by pocket doors, an office lobby opening into an elevator hall, and a hallway leading to a stairwell.

Spaces could have distinctive proportions, such as ceiling height to room size, or significant or unusual room shapes or volumes, such as rooms with curved walls, rooms with six or eight walls, or rooms with vaulted ceilings.

C.3 Restoration and Preservation Objectives.

C.3.1 Historic Documentation. Relevant information might exist in the files of local or national historic organizations. If the historic resource is listed in a register or listing of historic places, a careful review of the official register nomination should be the first step in the building assessment. An understanding of why and when the individual building or historic district achieved significance helps in evaluating those spaces and features that are significant for their association with specific events or persons, architectural importance, or information potential.

In some cases, older register listings might neglect to describe all architectural spaces and features of the building's exterior and interior. Such omissions should not be construed to mean that the building possesses no character-defining elements. In such cases, professional preservation judgment can be of great assistance.

C.4 Code Deficiencies: Code, Standard, and Regulation Compliance. The evaluation of existing conditions should include a review of all safety-related requirements to determine if and where the codes might vary. Contact should be made with local fire and building authorities in order to determine the codes and standards in effect.

The code review will illustrate those areas of the building where code requirements are most stringent and where conflicts between code requirements and historic preservation concerns are most likely to occur. This review might assist in determining building use and designs that cause the least damage to historic character.

Typical code or safety deficiencies found in historic buildings might relate to construction, building systems, egress systems, use and occupancy, fire protection systems, and site concerns. Some deficiencies can be addressed readily without damage to the historic character of the building, while others require innovative solutions outside the strict compliance with codes and standards for new construction. Several of these deficiencies, with some solution options to assist in achieving compliance with fire safety code and standard objectives, are described in C.4.1 through C.4.6.

Copyright National Fire Protection Association
Provided by IHS under license with NFPA
No reproduction or networking permitted without license from IHS
Not for Resale

C.4.1 Common Building Construction Deficiencies. Common building construction deficiencies might include inadequate fire resistance of interior or exterior walls, insufficient interior compartmentation, deficient fire stopping, inadequate tenant separation, insufficiently protected combustible construction, excessive building height and fire area, and combustible materials or flammable finishes.

C.4.2 Common Building System Fire Safety Deficiencies. Common building system fire safety deficiencies might include inadequately sized mechanical and electrical systems; insufficient dampers; inadequate chimney design, height, or lining; and inappropriate mechanical or electrical enclosures.

C.4.3 Typical Egress System Deficiencies. Typical egress system deficiencies might include insufficient number of exits; undersized exit route width; inadequate fire resistance of exit corridors, doors, or stairways; exit routes that do not lead directly to the exterior; dead-end corridors; excessive exit travel distance; inappropriate exit route configuration; and unenclosed monumental stairs.

C.4.4 Building Use and Occupancy Code Deficiencies. Building use and occupancy code deficiencies might include a use or occupancy not permitted in the particular construction type, incompatible uses, excessive or inappropriate human occupancy, and hazardous activities or processes.

C.4.5 Fire Protection System Deficiencies. Fire protection system deficiencies might include inoperative or insufficient automatic sprinkler protection; lack of manual fire-fighting systems (e.g., standpipes, fire extinguishers); inadequate water supply for fire protection use; insufficient smoke detectors, manual fire alarm stations, and audible alarms; lack of monitored fire detection, suppression, and alarm systems; and nonexistent or inadequate lightning protection.

C.4.6 Site Concerns. Site concerns might include inadequate separation distance between buildings, incompatible site uses, exterior fire hazards, and difficult access for fire-fighting vehicles.

C.5 Existing Fire and Life Safety Hazards. A fire hazard is a condition that might contribute to the start or spread of a fire or to the endangerment of people or property by fire. The general elements of fire hazards are ignition sources, combustibility of materials, and structural fire hazards.

C.5.1 Ignition Sources. Ignition is the initiation of combustion. It originates with the heating of a fuel by a heat source. When the temperature of the material is raised sufficiently, it begins to pyrolyze or decompose from heat into simpler substances, primarily combustible gases and vapors. Different substances are produced at varying rates and temperatures. When an adequate mass of combustible gases and vapors is mixed with oxygen or air and exposed to an energy source of sufficient intensity, ignition takes place.

Any form of energy is a potential ignition source. Most often the source is open flames or electrical wiring and appliances. Smoking, candles, solid-fuel heating, and similar combustion processes represent likely sources of ignition. Certain occupancies, such as restaurants and repair facilities, significantly increase the number and variety of heat sources. An example of a more unusual ignition source associated with historic buildings is the capacity of historic "bull's eye" glass to focus rays of the sun. *(See Goldstone, "Hazards from the Concentration of Solar Radiation by Textured Window Glass.")*

C.5.1.1 Electricity. Inadequate electrical service and misuse of appliances are also common hazards. Electricity starts a fire when current flowing through a conductor encounters resistance, which generates heat. When the conductor is of proper size, this heat is dissipated. Excessive heat can be generated by overloads, arcing, faults, high resistance at poor connections, or lack of adequate cooling or heat dissipation.

Conditions leading to electrically caused fires most often involve wiring. A fire threat exists wherever protective wire insulation is damaged by heat, moisture, oils, vibration, impact, or operating conditions that result in loose connections.

Motors are the next most frequent source of electrical fire ignition. Motor fires result from electrical malfunction (e.g., faults, arcing, lightning surges), overheating, and bearing failure (e.g., from inadequate lubrication).

C.5.1.2 Arson. In recent decades, deliberately set fires have become a significant problem. Arson is a major threat to fire safety and always should be considered. Loss experience indicates that infrequently attended occupancies are the most frequent arson targets. Building storage areas offer large amounts of potential fuel and are usually unoccupied, conditions that are favorable for an arsonist. Mercantile and other public access areas are the next most frequent incendiary targets due to large amounts of combustibles and easy circulation.

C.5.1.3 Smoking. Smoking is a major cause of fire. Improperly handled and disposed-of cigarettes and matches present a threat that can be minimized by control and education. Where smoking is allowed, precautions should be enacted to minimize associated hazards. Total prohibition of smoking in a building could result in occupants smoking in hidden, combustible-filled areas.

C.5.1.4 Overheated Materials. Many processes use heated flammable liquids or baking, drying, or other high-temperature operations. Excessive overheating can lead to generation of flammable vapors and ignition of combustibles. Fires have been started by the hot surfaces of electrical equipment, piping, boilers, furnaces, ovens, dryers, flues, ductwork, and incandescent light bulbs. Heat conducted from such equipment can ignite adjacent combustibles. Friction in machinery components is also a potential cause of fire. Loose or worn moving parts rubbing against each other can generate enough heat to ignite nearby combustibles, such as lint and paper dust. Common friction sources include misaligned drive belts and worn or improperly lubricated bearings.

C.5.1.5 Open Flames. Improperly used open flames from portable torches, space heaters, cigarette lighters, and matches are a significant fire problem. In older structures, chimneys are particularly dangerous if not properly lined and pointed. Torches used for cutting, welding, soldering, and brazing can ignite adjacent combustibles. Space-heating equipment can be knocked over or used in close proximity to combustibles, resulting in fire.

C.5.1.6 Exposures. A building fire could start because of heat generated from a fire in a nearby structure, in yard storage, or in vegetation. Important factors include physical separation between exposed hazards, combustibility of the exposed building's exterior, and the extent and protection of openings.

C.5.1.7 Spontaneous Ignition and Chemical Reactions. Chemical reactions can result in fires and explosions. Typical adverse reactions occur when chemicals react with other materials and when decomposition of unstable chemicals and hazardous processes are out of control.

Some materials undergo self-oxidation, giving off heat. When such materials are confined, more heat is generated

Copyright National Fire Protection Association
Provided by IHS under license with NFPA
No reproduction or networking permitted without license from IHS
Not for Resale

than is dissipated, with ignition the likely result. Typical products subject to spontaneous ignition include rags or paper soaked in finishing, animal, and vegetable oils. Paint deposits containing drying oils can heat up and ignite.

C.5.1.8 Lightning. Fires can be started by direct lightning strikes and lightning-induced surges (i.e., overvoltage) in electrical circuits. The installation of lightning (surge) arresters on power and communication lines where they enter structures is recommended and is covered in NFPA 70, *National Electrical Code*.

C.5.2 Combustibility of Materials.

C.5.2.1 Material Properties. The tendency of a material to ignite is a function of its chemistry, physical state, surface texture, and moisture content. Different chemical compositions have different minimum temperatures at which they ignite. Ignition is a function of time as well as temperature. A potential fuel subjected to a relatively high temperature for a short period of time might not ignite, while the same fuel can undergo ignition when exposed for a longer duration to a lower temperature. For example, wood products have a normal ignition temperature of 400°F to 500°F (204°C to 260°C), but they have been found to ignite when subjected to a much lower heat source of 228°F (109°C) for 4 days. *(See the NFPA Fire Protection Handbook.)*

The contents of most buildings consist of combustible materials. Accumulations of readily ignitable items constitute a fire hazard. Construction materials, such as siding and roofing, can increase the possibility of fire spread from other buildings. This is especially true of wood shingles that are not fire-retardant treated.

C.5.2.2 Flame Spread. Combustibility is the principal factor contributing to the spread of flame across surfaces. Once ignition takes place, the flame heats surrounding material, causing it to ignite and thereby spread across the surface. The rate at which flame spread occurs is measured by test. *(See NFPA 255, Standard Method of Test of Surface Burning Characteristics of Building Materials.) Most building codes and NFPA 101, Life Safety Code, place restrictions on the use of materials with high flame-spread rates.*

A single layer of paint and most wall coverings add little fuel to a fire. Even if paint or coverings burn completely, only a small amount of heat is liberated and little damage results. On the other hand, the substrate on which the paint or paper is applied can have a great influence on flame spread. Paint on a metal ceiling might not ignite at all under fire exposure because the heat is dissipated by the metal.

Walls in older buildings might have been repeatedly painted or papered. Where multiple layers of paint and paper are present, flame spread can be significantly increased.

The existence of interior wood paneling, as found in many historic structures, adds to the fuel and thereby increases flame spread. Combustible composition ceiling and wall materials and plastics in the form of high-density solids and expanded foam products also can contribute to flame spread. Flame spread in low-density cellulosic materials, used extensively in some older buildings for ceiling tile and wall panels, is likely to be rapid.

C.5.2.3 Environmental Factors. Sustained burning of the fuel material depends on its combustibility and on additional factors, such as interaction of surfaces, fluid flows, and thermal absorption. These factors are neither well defined nor predictable outside the laboratory. Observed conditions that produce these effects include arrangement of combustibles, wall materials, and room dimensions.

Furnishings and other combustibles that are close together cause fire to spread easily from one item to another. A fire starting in a corner can grow in size about four times faster than a fire in the middle of a room. Flame spread is much faster on vertical surfaces than on horizontal surfaces.

In general, fire develops more slowly in larger spaces. This is particularly true with respect to the height of the ceiling. A high ceiling is inherently more fire safe than a low colonial ceiling. Fires that can vent to the outside through windows or other means are slower to spread to other parts of a building.

C.5.3 Structural Fire Hazards. Structural features of buildings that constitute fire hazards are of two types: structural conditions that promote fire spread, either vertically or horizontally, and conditions that could lead to structural failure during a fire.

C.5.3.1 Fire Spread. Most buildings form a connected series of compartments. As such, they are inherently safer from fire if a fire can be contained to the compartment of origin. Unfortunately, design, construction, and use practices create many avenues for fire spread. For example, some construction can create virtual chimneys in the stud channels, allowing fire to spread the full height of the building. Paths of fire spread can be either horizontal or vertical.

C.5.3.1.1 Means of Horizontal Fire Spread. Means of horizontal fire spread include the following:

(1) Doorways
(2) Ceiling voids over walls
(3) Floor cavities under walls
(4) Utility and service chase-through walls
(5) Voids in projecting eaves or cornices
(6) Wall failure
(7) Openings produced by distortion or failure of structural members in a fire
(8) Open attic spaces and cocklofts
(9) Corridors

C.5.3.1.2 Means of Vertical Fire Spread. Means of vertical fire spread include the following:

(1) Stairways
(2) Conduction of heat through the hearth slab to supporting timbers below
(3) Wall cavities penetrating the floor
(4) Utility and service chases penetrating the floor
(5) Shafts for elevators, dumbwaiters, laundry chutes, and trash chutes
(6) Breaching of the floor or ceiling by fire
(7) Atriums
(8) Windows or other exterior openings

C.5.3.2 Structural Integrity. The ability of structural framing to resist the effects of a severe fire is dependent on the framing material and its dimensions. Wood members, while combustible, might have a limited fire resistance, which depends on size, since fire resistance is a function of the surface-to-mass ratio of a member. Large-dimensioned lumber, such as that used in heavy timber construction, provides significant endurance from the effects of fire. Studs and joists have little fire resistance, although older, fully dimensioned members are significantly better than modern thin-webbed or strap-hung construction. Steel, although noncombustible, is subject to decreased structural capacity at relatively low fire temperature. Structural members can be protected to improve their resistance to fire.

Copyright National Fire Protection Association
Provided by IHS under license with NFPA
No reproduction or networking permitted without license from IHS
Not for Resale

C.5.4 Means of Egress.

C.5.4.1 Occupant Evacuation. Evacuation of occupants is the primary approach to life safety in the event of fire. Egress problems in exiting buildings generally arise with respect to number of exits, exit capacities, arrangement of exits, or construction details.

C.5.4.2 Egress Codes. NFPA *101*, *Life Safety Code*, and most building codes detail specific requirements for ensuring adequate means of egress. NFPA *101* requires exits to be separated from other spaces of the building to provide a protected way of travel to a safe area.

C.5.4.3 Number of Exits. Codes specify the number of exits that must be provided for each floor as well as for the entire building. Minimum exit requirements are established to increase the reliability of the egress system. A minimum of two means of egress is a fundamental life safety principle, and codes permit few exceptions to this rule. The intent is that, for any single fire situation that prohibits travel to one exit, an alternate exit will be available. Additional exits might be required after consideration of the arrangement or capacity of exits.

C.5.4.4 Exit Capacities. Codes regulate the capacity of exits by establishing a relationship between the required width of various exit elements and the number of occupants they serve and by establishing minimum widths for each of the exit elements. It is the intent of the codes to provide an exit capacity large enough to move the total expected number of occupants into the safety of the exits before access to the exits becomes difficult.

C.5.4.5 Exit Arrangement. In addition to code requirements for exit number and capacity, codes generally require that exits be located to facilitate their use in a fire emergency. Requirements address remoteness, maximum travel distance, direct exit to the exterior, and maximum dead-end travel distance.

C.5.4.6 Remoteness. Codes generally require that exits are as remote from each other as practical and that they are arranged to allow direct access in separate directions. The intent of providing exit remoteness is to minimize the probability that access to all exits will be blocked by a single fire. The term *remote* is subjective and frequently is a matter of interpretation.

C.5.4.7 Travel Distance. Code requirements governing travel distance to an exit are intended to establish a maximum interval of time for an occupant to reach an exit. Travel distances are measured by mapping the path of travel to an exit. When combined with requirements for minimum number of exits and exit remoteness, the limitations on travel distance ensure that even if one exit is blocked by a fire, an occupant will be able to reach another exit or a location of refuge before the fire has spread in a manner that would prevent escape. The actual time for escape implied by maximum travel distance limitations is not explicitly stated in the codes.

C.5.4.8 Dead-End Travel. Dead-end corridors of any length are undesirable features in buildings for two reasons. First, people who use a dead-end corridor to reach an exit could be trapped by fire or smoke between themselves and the exit. Second, it is possible to mistakenly enter a dead-end corridor rather than an exit and, under smoky or poor light conditions, become trapped or confused.

C.5.4.9 Egress Route Identification. In general, exit routes must be clearly marked to assist occupants with evacuation path identification. During a fire emergency, visibility can become rapidly obscured by smoke and fire products. Rapid exit identification methods include exit signage, escape route diagrams, and emergency illumination.

C.5.4.10 Construction Details. Codes provide many requirements for the details of various exit components that make up a building's egress system. Typical areas covered include means of separation from other spaces, allowable materials, handrails, tread and riser design, landings, platforms, guards, door hardware, alarms, and lighting. The intent of these provisions is to ensure a quality design that promotes safe and easy passage. Individual code requirements tend to be numerous and highly specific.

--`,,```,,,,````-`-`,,`,,`,`,,`---

Copyright National Fire Protection Association
Provided by IHS under license with NFPA
No reproduction or networking permitted without license from IHS
Not for Resale

Annex D Basics of Fire and Fire Protection Systems

This annex is not a part of the requirements of this NFPA document but is included for informational purposes only.

D.1 Classification of Fires. Most fires that occur in cultural properties can be expected to fall into one or more of the following categories:

(1) *Class A.* Fires involving ordinary combustible materials, such as paper, wood, and textile fibers, where a cooling, blanketing, or wetting extinguishing agent is needed
(2) *Class B.* Fires involving oils, greases, paints, and flammable liquids, where a smothering or blanketing action is needed for extinguishment
(3) *Class C.* Fires involving live electrical equipment, where a nonconducting gaseous clean agent or smothering agent is needed

D.1.1 Fire Detection and Alarm Systems. Technology is available to customize a fire detection system for the particular needs of specific properties. Early detection of fires affords the opportunity of occupant intervention and potentially faster response by automatic fire suppression.

D.2 Glossary of Fire Protection Systems. Table D.2(a) through Table D.2(d) describe detection, alarm, and extinguishing systems that are appropriate for use in cultural properties. Included are comments about the intended or optimum applications of each system and recommendations for system applications. Insofar as possible, nontechnical terminology has been used so that the information presented can be readily understood by anyone who has been delegated responsibility for fire safety.

Table D.2(a) Classification of Fire Detection Systems by Method of Detection

Type	Description	Comments
1. Smoke detection systems	Systems that use devices that respond to the smoke particles produced by a fire. They operate on the ionization, photoelectric, cloud chamber, or other smoke particle analysis principle of operation. Spot-type smoke detectors use either the ionization principle of operation or the photoelectric principle. Line-type smoke detectors use the photoelectric principle. Aspiration-type smoke detectors use the ionization, photoelectric, cloud chamber, or other particle analysis principle of operation. Properly installed, smoke detectors can detect smoke particles in very early stages of fire in the areas where they are located. The selection of a particular detector or mix of detectors should be based on building and fire-load conditions and made by a fire protection specialist.	These systems are intended for early warning. Some are designed for installation in ventilation ducts. *(See NFPA 72, National Fire Alarm Code.)*
2. Heat detection systems	Systems that use heat-responsive devices of either the spot or line type. They are mounted either on exposed ceiling surfaces or a sidewall near the ceiling. Heat detectors are designed to respond when the operating element reaches a predetermined temperature (fixed-temperature detector), when the temperature rises at a rate exceeding a predetermined value (rate-of-rise detector), or when the temperature of the air surrounding the device reaches a predetermined level, regardless of the rate of temperature rise (rate compensation detector). Some devices incorporate both fixed-temperature and rate-of-rise detection principles. Spot-type detectors are usually small devices a few inches in diameter. Line-type detectors are usually lengths of heat-sensitive cable or small-bore metal tubing.	These systems are relatively low cost. They cannot detect small, smoldering fires. Line-type detectors can be installed in a relatively inconspicuous manner by taking advantage of ceiling designs and patterns. *(See NFPA 72, National Fire Alarm Code.)* The air temperature surrounding a fixed-temperature device at the time it operates usually is considerably higher than the rated temperature, because it takes time for the air to raise the temperature of the operating element to its set point, a condition called thermal lag. Rate compensation devices compensate for thermal lag and respond more quickly when the surrounding air reaches the set point. Given the monetary value and irreplaceable nature of typical museum collections, early-warning, air-sampling-type detector systems should be considered for optimum protection. These systems are also less conspicuous and minimize disruption to architectural integrity. Proper selection of a particular detector or a mix of detectors should be based on building and fire-load conditions and made by a fire protection specialist.
3. Flame detection systems	Systems that use devices that respond to radiant energy visible to the human eye (approximately 4000 to 7000 angstroms) or to radiant energy outside the range of human vision [usually infrared (IR), ultraviolet (UV), or both]. Flame detectors are sensitive to glowing embers, coals, or actual flames with energy of sufficient intensity and spectral quality to initiate the detector.	Because flame detectors are essentially line-of-sight devices, special care should be taken in their application to ensure that their ability to respond to the required area of fire in the zone that is to be protected is not unduly compromised by the permanent or temporary presence of intervening structural members or other opaque objects or materials. *(See NFPA 72, National Fire Alarm Code.)*

--`,,```,,,````-`-`,,`,,`,`,,`---

Copyright National Fire Protection Association
Provided by IHS under license with NFPA
No reproduction or networking permitted without license from IHS
Not for Resale

Table D.2(b) Classification of Fire Alarm Systems by Method of Operation

Type	Description	Comments
1. Local fire alarm system	An alarm system operating in the protected premises that is responsive to the operation of a manual fire alarm box, waterflow in a sprinkler system, or detection of a fire by a smoke-, heat-, or flame-detecting system.	The main purpose of this system is to provide an evacuation alarm for the occupants of the building. Someone must always be present to transmit the alarm to fire authorities. *(See NFPA 72, National Fire Alarm Code.)*
2. Auxiliary fire alarm system	An alarm system that utilizes a standard municipal fire alarm box to transmit a fire alarm from a protected property to municipal fire headquarters. These alarms are received on the same municipal equipment and are carried over the same transmission lines as are used to connect fire alarm boxes located on streets. Operation is initiated by the local fire detection and alarm system installed at the protected property.	Some communities accept this type of system and others do not. *(See NFPA 72, National Fire Alarm Code, and NFPA 1221, Standard for the Installation, Maintenance, and Use of Emergency Services Communications Systems.)*
3. Central station fire alarm system	An alarm system that connects protected premises to a privately owned central station and that monitors the connecting lines constantly and records any indication of fire, supervisory, or other trouble signals from the protected premises. When a signal is received, the central station takes such action as is required, such as informing the municipal fire department of a fire or notifying the police department of intrusion.	This is a flexible system. It can handle many types of alarms, including trouble within systems at protected premises. *(See NFPA 72, National Fire Alarm Code.)*
4. Remote station fire alarm system	An alarm system that connects protected premises over telephone lines to a remote station, such as a fire station or a police station. It includes separate receivers for individual functions being monitored, such as fire alarm signal or sprinkler waterflow alarm.	*(See NFPA 72, National Fire Alarm Code.)*
5. Proprietary fire alarm system	An alarm system that serves contiguous or noncontiguous properties under one ownership from a central supervising station at the protected property. It is similar to a central station system but is owned by the protected property.	This system requires 24-hour attendance at a central supervising station. *(See NFPA 72, National Fire Alarm Code.)*
6. Emergency voice/alarm communication system	A system used to supplement any of the systems listed above by permitting voice communication throughout a building so that instructions can be given to building occupants. During a fire emergency, prerecorded messages can be played, fire department personnel can transmit live messages, or both.	*(See NFPA 72, National Fire Alarm Code.)*

--`,,```,,,,````-`-`,,`,,`,`,,`---

Copyright National Fire Protection Association
Provided by IHS under license with NFPA
No reproduction or networking permitted without license from IHS
Not for Resale

Table D.2(c) Classification of Fire Detection and Alarm Systems by Type of Control

Type	Description	Comments
1. Conventional system	A fire detection system that utilizes copper wire to interconnect all initiating devices and signaling appliances to the fire alarm control panel. The wiring must be installed in a closed-loop fashion for each zone circuit to ensure proper electrical supervision or monitoring of the circuit conductors for integrity.	This is the most common type of fire alarm system. It provides basic alarm, trouble, and supervisory signal information and is used for small- to medium-size systems.
2. Microprocessor-based system	Identical to the conventional system, with the exception that the fire alarm control panel has more features available, such as smoke detector alarm verification and system walk test. Some of these systems "multiplex" information to their attached remote annunciators over four conductors rather than one conductor per zone.	Most modern systems are microprocessor-based to provide features desired by installers, owners, and fire departments.
3. Addressable multiplex system	A system that utilizes initiating devices and control points, each assigned a unique three- or four-digit number called the detector's "address." The fire alarm control panel's microprocessor is programmed with the address number. All activity by or affecting the device is monitored and recorded at the control panel.	This type of system provides more detailed information about alarm, trouble, or supervisory conditions. Essentially, the system is zoned by device rather than by an entire floor or area. The equipment for addressable multiplex systems is more costly, but, generally, installation costs are reduced substantially, operations are more flexible, and maintenance is more efficient.
4. Addressable analog multiplex system	Identical to the addressable multiplex system, with the exception that the smoke and heat detectors connected to the microprocessor are analog devices. The analog devices sense the fire signature and continuously send information to the control panel microprocessor, which determines the sensitivity, alarm point, and maintenance window of the analog device. Accordingly, this system is also called "intelligent" or "smart."	Analog systems provide the maximum flexibility and information that can be obtained from a fire alarm system. These computer-based systems require sophisticated technical expertise to maintain and service which should be considered in the design process. Addressable fire detection systems allow for the execution of preprogrammed sensitivity levels for smoke detectors based on the time of day or days of the week, ranging from a low-sensitivity level when the premises are occupied to a high-sensitivity level when only employees are present or the protected premises are vacant.
5. Wireless system	A system that uses battery-powered initiating devices, which transmit the alarm or trouble signal to a receiver/control panel. Each initiating device can be individually identified by the control panel for annunciation purposes.	The battery in each initiating device lasts for a minimum of 1 year but needs to be replaced when the initiating device transmits a battery depletion signal to the control panel. Wireless systems can be used where it is not possible or feasible to install the electrical cable needed by hard-wired systems.

Copyright National Fire Protection Association
Provided by IHS under license with NFPA
No reproduction or networking permitted without license from IHS
Not for Resale

Table D.2(d) Glossary of Fire-Extinguishing Systems

Type	Description	Comments
1. Wet-pipe automatic sprinkler system	A permanently piped water system under pressure, using heat-actuated sprinklers. When a fire occurs, the sprinklers exposed to the high heat operate and discharge water individually to control or extinguish the fire.	This system automatically detects and controls fire. It should not be installed in spaces subject to freezing and might not be the best choice in spaces where the likelihood of mechanical damage to sprinklers or piping is high, such as in low-ceiling areas, and could result in accidental discharge of water. Where there is a potential for water damage to contents, such as books, works of art, records, and furnishings, the system can be equipped with mechanically operated on-off or cycling heads to minimize the amount of water discharged *(see type 3)*. In most instances, the operation of only one sprinkler will control a fire until the arrival of fire fighters. Often the operation of a sprinkler system will make the use of hose lines by fire fighters unnecessary, thus reducing the amount of water put onto the fire and the subsequent amount of water damage. *(See NFPA 13, Standard for the Installation of Sprinkler Systems, and NFPA 22, Standard for Water Tanks for Private Fire Protection.)*
2. Preaction automatic sprinkler system	A system that employs automatic sprinklers attached to a piping system containing air that might or might not be under pressure, with a supplemental fire detection system installed in the same area as the sprinklers. Actuation of the fire detection system by a fire opens a valve that allows water to flow into the sprinkler system piping and to be discharged from any sprinklers that are opened subsequently by the heat from the fire.	This system automatically detects and controls fire. It can be installed in areas subject to freezing. Because it minimizes the accidental discharge of water due to mechanical damage to sprinklers or piping, it is useful in areas where system leaks would pose a hazard for works of art, books, records, and other materials susceptible to damage or destruction by water. Such water damage is rare, however, resulting in only 1.6 accidental discharges per year per 1 million sprinklers in use. Failure of the actuation system would prevent operation of the preaction sprinkler system, except by manual operation of the water supply valve, and thus presents a potential failure mode that reduces the reliability of this system compared with wet-pipe systems. Furthermore, a preaction system requires a significantly higher level of regular maintenance, involving additional potential failure modes that further reduce its reliability relative to wet-pipe systems. Most water-sensitive items can be salvaged from wetting but not from ashes. *(See NFPA 13, Standard for the Installation of Sprinkler Systems, and NFPA 22, Standard for Water Tanks for Private Fire Protection.)*

Copyright National Fire Protection Association
Provided by IHS under license with NFPA
No reproduction or networking permitted without license from IHS
Not for Resale

Table D.2(d) ***Continued***

Type	Description	Comments
3. On-off automatic sprinkler system	A system similar to the preaction system, except that the fire detector operation acts as an electrical interlock, causing the control valve to open at a predetermined temperature and close when normal temperature is restored. If the fire rekindles after its initial control, the valve reopens, and water again flows from the opened sprinklers. The valve continues to open and to close in accordance with the temperature sensed by the fire detectors. Another type of on-off system is a standard wet-pipe system with on-off sprinklers. Here, each individual sprinkler is equipped with a temperature-sensitive device that causes the sprinkler to open at a predetermined temperature and to close automatically when the temperature at the sprinkler is restored to normal.	In addition to the favorable feature of the automatic wet-pipe system, these systems have the ability to automatically stop the flow of water when no longer needed, thus eliminating unnecessary water damage. *(See NFPA 13, Standard for the Installation of Sprinkler Systems, and NFPA 22, Standard for Water Tanks for Private Fire Protection.)*
4. Dry-pipe automatic sprinkler system	A system that employs automatic sprinklers attached to a piping system containing air under pressure. When a sprinkler operates, the air pressure is reduced, thus allowing the dry-pipe valve to open and to allow water to flow through any opened sprinklers.	*(See type 1.)* This system can protect areas subject to freezing. Water supply must be in a heated area. *(See NFPA 13, Standard for the Installation of Sprinkler Systems, and NFPA 22, Standard for Water Tanks for Private Fire Protection.)*
5. Standpipe and hose system	A piping system in a building to which hoses are connected for emergency use by building occupants or by the fire department.	This system is a desirable complement to an automatic sprinkler system. Staff must be trained to use hose effectively. *(See NFPA 14, Standard for the Installation of Standpipe, Private Hydrant, and Hose Systems.)*
6. Gaseous automatic system	A system that uses gaseous extinguishing agents, including Halon 1301, carbon dioxide, and new clean agents, which have been approved as replacements for Halon 1301. (Halon 1301 is no longer manufactured due to its deleterious effect on the ozone layer.) These systems are permanently piped using a measured, stored supply of a gaseous extinguishant under pressure and discharge nozzles to totally flood an enclosed space. The extinguishing agent is released automatically by a suitable early warning detection system. The systems extinguish fire by chemical or mechanical means.	Clean agents are low in toxicity, but the products of decomposition of some agents during a fire can be hazardous. These products are kept to an acceptable limit by the systems' ability to detect a fire in its incipient stage and to discharge the agent before decomposition products can attain harmful levels. It should be noted that products of combustion of the fire are considerably more hazardous. Therefore, the fire area should be promptly evacuated upon sounding of a fire alarm prior to agent discharge. Clean agents might not extinguish deep-seated fires in ordinary solid combustibles, such as paper and fabrics, but are effective on surface fires in these materials. An early warning detection system, which releases the agent in the fire's incipient stage, should extinguish the fire before it can become deep-seated. These systems need special precautions to avoid damaging effects caused by their extremely rapid release. The high-velocity discharge from nozzles might be sufficient to dislodge objects directly in the path. Where carbon dioxide systems are used, personnel should evacuate immediately upon sounding of a fire alarm, before agent discharge, to avoid suffocation. *(See NFPA 12, Standard on Carbon Dioxide Extinguishing Systems; NFPA 12A, Standard on Halon 1301 Fire Extinguishing Systems; and NFPA 2001, Standard on Clean Agent Fire Extinguishing Systems.)*

(continues)

Copyright National Fire Protection Association
Provided by IHS under license with NFPA
No reproduction or networking permitted without license from IHS
Not for Resale

Table D.2(d) ***Continued***

Type	Description	Comments
7. Dry chemical system	A permanently piped system that discharges a dry chemical from fixed nozzles by means of an expellant gas. The system either totally floods an enclosed space or applies the dry chemical directly onto the fire in a local application. The dry chemical extinguishes fires by the interaction of the dry chemical particles to stop the chain reaction that takes place in flame combustion. The dry chemical is released mechanically or with a suitable detection system.	This system leaves a powdery deposit on all exposed surfaces in and around the hazard being protected, which requires cleanup. This type of system provides excellent protection from a fire when installed in the ducts and hood over cooking equipment such as deep fat fryers, range griddles, and broilers that could be a source of ignition. It might not extinguish deep-seated fires but is effective on surface fires. *(See NFPA 17, Standard for Dry Chemical Extinguishing Systems.)*
8. High-expansion foam system	A fixed extinguishing system that generates a foam agent for total flooding of confined spaces and for volumetric displacement of vapor, heat, and smoke. It acts on fire in the following ways: (1) Prevents free movement of air (2) Reduces the oxygen concentration at the fire (3) Cools The foam agent is released automatically by a suitable detection system.	Where personnel might be exposed to a high-expansion foam discharge, suitable safeguards should be provided to ensure prompt evacuation of the area. The discharge of large amounts of high-expansion foam can inundate personnel, blocking vision, making hearing difficult, and creating some discomfort in breathing. It also leaves residue and requires cleanup. Properly designed, high-expansion foam used in conjunction with water sprinklers provides more positive control and extinguishment than either extinguishment system used independently. *(See NFPA 11, Standard for Low-, Medium-, and High-Expansion Foam.)*
9. Wet chemical extinguishing system	A system that operates in the same way as halon systems *(see type 6)*, except that it uses a liquid agent usually released by automatic mechanical thermal linkage. It is effective for restaurant, commercial, and institutional hoods, plenums, ducts, and associated cooking appliances.	This system leaves agent residue that is confined to the protection area(s) and requires cleanup. Excellent for service facilities having range hoods and ducts. *(See NFPA 17A, Standard for Wet Chemical Extinguishing Systems.)*
10. Fine water mist system	In general, a piped system or modular, pressurized container system that delivers a fine water mist and that has a water droplet size ranging to a maximum 1000 μm.	

Copyright National Fire Protection Association
Provided by IHS under license with NFPA
No reproduction or networking permitted without license from IHS
Not for Resale

Annex E Resources for Protection of Cultural Resource Property Projects

This annex is not a part of the requirements of this NFPA document but is included for informational purposes only.

E.1 Introduction. A fire protection consultant can be a valuable resource in evaluating the current status of fire safety for a cultural property and in recommending creative solutions to improve fire safety and achieve fire safety goals. To realize the maximum benefit from engaging a fire protection consultant, the consultant's qualifications and the client's needs should be properly matched. The consultant should have qualifications equivalent to member grade in the Society of Fire Protection Engineers (SFPE).

The consultant's experience should be evaluated, both as a company and as individual consultant team members, in providing fire protection consulting services to libraries. Other experience that might also be considered is that for historic buildings or structures and museums.

The consultant's experience should also be compared with the nature of the work to be performed and the size of the project being considered. As a final factor for evaluation of experience, whether the specific team proposed has worked together and the degree to which the experience is team experience should be considered.

Other factors that should be used in evaluating a consultant's qualifications are membership and participation in organizations such as NFPA; the American Institute of Architects (AIA), for registered architects; the National Society of Professional Engineers (NSPE), for registered engineers; and the model building code organizations. Participation on committees of these organizations is a further measure of the consultant's understanding of library fire safety issues.

After information on the fire protection consultant's qualifications has been collected, references should be contacted to determine how the consultant has actually performed on similar projects.

E.2 NFPA. National Fire Protection Association, 1 Batterymarch Park, Quincy, MA 02169-7471.

NFPA publishes this document and related documents on fire protection and will answer inquiries on these documents. The association also conducts educational seminars, studies, and literature searches for a fee.

NFPA maintains a list of fire protection consultants.

E.3 SFPE. Society of Fire Protection Engineers, 7315 Wisconsin Avenue, Suite 122SW, Bethesda, MD 20814.

SFPE is a professional society of fire protection engineers that meets annually, publishes technical information, conducts technical seminars, and supports local chapters. Members are located in all parts of the world. Names and addresses of members in a particular geographic area can be obtained from society headquarters.

E.4 NICET. National Institute for Certification in Engineering Technologies, 1420 King Street, Alexandria, VA 22314.

NICET certifies technicians in the following areas of fire protection:

(1) Automatic sprinkler system layout
(2) Special hazards system layout (i.e., automatic and manual foam–water, halon, carbon dioxide, and dry chemical systems)
(3) Fire detection and alarm systems

People with a NICET certification can also assist in the selection and use of fire protection systems. NICET provides certification for four levels of competence in all three of the listed areas of fire protection.

E.5 UL. Underwriters Laboratories Inc., 333 Pfingsten Road, Northbrook, IL 60062-2096.

UL has a certification service through which alarm companies can be qualified to issue certificates stating that installed fire warning systems comply with NFPA standards and are properly tested and maintained. A list of alarm service companies authorized to issue UL certificates is available. UL also publishes safety standards and annual directories of labeled and listed products and fire-resistant assemblies.

Copyright National Fire Protection Association
Provided by IHS under license with NFPA
No reproduction or networking permitted without license from IHS
Not for Resale

Annex F Examples of Compliance Alternatives

This annex is not a part of the requirements of this NFPA document but is included for informational purposes only.

F.1 General. Direct compliance with prescriptive codes is still the predominant means of ensuring fire safety in historic buildings. Most codes include provisions for equivalent protection by means other than those prescribed in the code. The following examples illustrate ways that preservation goals have been met through carefully designed fire protection that complied with prescriptive code provisions or through equivalency-based solutions that appropriately addressed safety deficiencies in a specific application.

Equivalency provisions allow alternative designs to satisfy regulations if they provide a level of fire safety equivalent to that called for by the regulations. As stated in 3.3.21, an equivalency approach is "an alternative means of providing an equal or greater degree of fire safety than that afforded by strict conformance to prescribed codes and standards."

There is no single acceptable method of providing appropriate fire safety. Each historic building is unique, requiring that equivalencies be assessed in relation to the particular circumstances of the historic structure and occupancy. What may be appropriate for one building may not be appropriate for another, and it cannot be assumed that the following solutions will apply to every situation. The intent of these examples is to illustrate context-sensitive design for achieving fire safety goals in historic properties.

F.2 Means of Egress. Figure F.2(a) shows a common fire safety problem in historic buildings. The main monumental stairway in this historic building is the primary access and exit route between the main lobby and the upper floors. The open stair is a key architectural feature but could provide a path of fire and smoke migration that would render the route unusable. Figure F.2(b) through Figure F.2(d) illustrate solutions to this problem.

Figure F.2(b) illustrates an egress enclosure solution that involved retrofitting existing historic glazed doors that enclose egress stairs with rated ceramic glass. Part of this process involved evaluating several fire performance tests on the stair door assembly.

Figure F.2(b) illustrates an original door retrofitted with 0.25 in. (7 mm) glass. The glass withstands the fire duration, and because the building is sprinkler protected, the hose stream test was waived for this installation.

The door is normally held open to permit normal occupant movement through the space. This is accomplished by magnetic devices on the floor that release and close the door when the fire alarm activates. The wall panel on the left that covers the retracted door was painted to match the adjoining historic marble.

The example illustrated in Figure F.2(c) involved the need to provide separation where multiple egress paths converged into a single evacuation point that had the potential to become obstructed during a fire. To resolve this situation, accordion-type cross-corridor doors were installed, thereby enabling the preservation of dozens of bronze and glass corridor doors that would have been absorbed into a larger egress path. These doors are normally open out of the visitor's view. However, if a fire is detected, these doors close to create a fire separation. The accordion door tracks, pocket, and cover were painted to match the surrounding veined marble and elaborate coffered ceiling. (Another example of a Won Door application is shown in Figure F.2(d), which illustrates a unit in a partially closed position.)

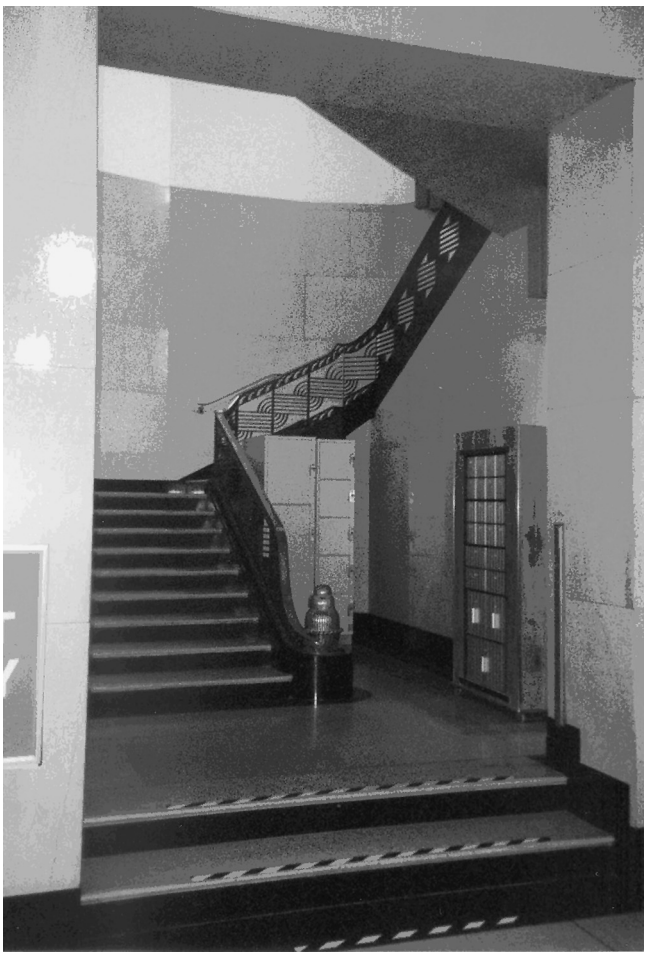

FIGURE F.2(a) Open Monumental Stair.



FIGURE F.2(b) Rated Glass Corridor Doors in Normal Position.

Copyright National Fire Protection Association
Provided by IHS under license with NFPA
No reproduction or networking permitted without license from IHS
Not for Resale

The accordion door and track in Figure F.2(c) have been carefully concealed and color-matched to minimize visual impact. The wall panel on the left that covers the retracted door was painted to match the adjoining historic marble.



FIGURE F.2(c) Won Door in an Open Position.

Figure F.2(d) illustrates an accordion door closing to protect a monumental stairway. Under normal conditions, the door is concealed in a wall pocket on the left side of the opening. When a smoke detector identifies a developing fire, a signal is sent to the building fire alarm, which in turn closes the Won Door to prevent fire spread via the stair.

F.3 Automatic Fire Suppression Systems. Figure F.3(a) illustrates the use of sprinklers to cool the window assembly during fire exposure. Tests conducted in 1984 by the National Research Council of Canada (NRC) for the atrium of the Toronto, Ontario Hospital for Sick Children (NRC Test CBD-248) demonstrated that when properly wetted by sprinklers, standard glazed windows can provide an effective barrier.

To retain the historic frame and ornamental glazing, the sprinkler in Figure F.3(a) was placed to cool the window assembly during fire exposure.

Figure F.3(b) illustrates automatic fire suppression utilizing water sprays, or mists, to accomplish fire control. Water mist occurs when water is subjected to high pressure ranging from approximately 100 to 1000 psi (6.8 to 68.5 bar) and forced through extremely small orifices. This results in very fine droplets that have a higher heat absorption capability than larger sprinkler drops, enabling fire suppression with approximately 10 percent to 20 percent of the water normally required for sprinklers. Mist may also be an effective radiant heat blocker, which prevents thermal energy from damaging adjacent contents and building features. Currently, water mist nozzles do not offer the same coverage ranges available with sprinklers and are often limited to rooms with a maximum ceiling height of 16 ft (5 m). This results in decreased flexibility in the placement of mist nozzles, but as new nozzle technologies are introduced this difference is expected to diminish.

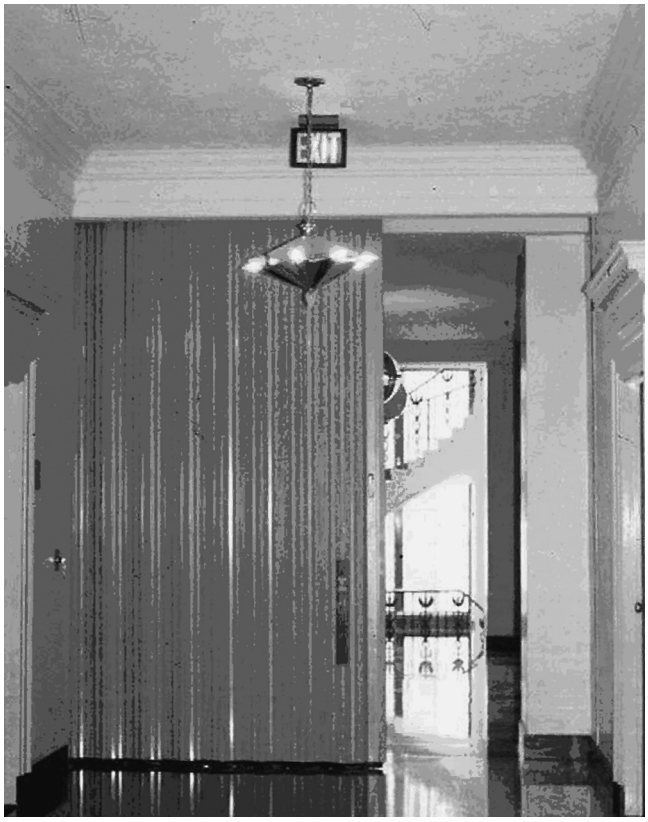

FIGURE F.2(d) Won Door in a Partially Closed Position.



FIGURE F.3(a) Sprinklers to Maintain Glass Cooling.

Figure F.3(b) shows a water mist system in operation during a fire test. Note the fog-like appearance of the sprays, which have millions of fine droplets to overcome the fire's heat.

Figure F.3(a) through Figure F.3(e) illustrate sprinkler piping and heads sensitively placed for minimal visibility and architectural impact. Ideally, all piping should be concealed, but this is not always possible because of the structural, architectural, and financial implications of constructing new enclosures in historic spaces that may contain ornamental ceilings or contoured surfaces.

Copyright National Fire Protection Association
Provided by IHS under license with NFPA
No reproduction or networking permitted without license from IHS
Not for Resale



FIGURE F.3(b) Water Mist Discharge.



FIGURE F.3(c) Exposed Sprinkler Pipe.

The sprinkler pipe in the vaulted ceiling shown in Figure F.3(c) was placed along the cornice at the base of the vault. Color-matched sidewall sprinklers were placed to allow proper water spray.

The pipes that serve the sprinkler heads shown in Figure F.3(d) were placed behind the beam, concealing them from the normal line of sight.

Figure F.3(e) shows the sprinkler piping for the fire sprinklers in Figure F.3(d).

In Figure F.3(f) shows the sprinkler head carefully placed in the center of the decorative ceiling rosette to minimize the visual impact.

F.4 Fire Detection Systems. Figure F.4(a) through Figure F.4(c) illustrate aesthetically integrated smoke sensors. The selection of a system and its components is dependent on the type and size of building, characteristics of the occupants, anticipated fire growth, and aesthetic and historic fabric issues.

Figure F.4(a) shows a smoke sensor that was color matched to the ornate ceiling. The sensor was disassembled by the manufacturer to permit factory painting of the cover and then reassembled, avoiding damage to the sensing components.



FIGURE F.3(d) Sprinkler Piping Concealed from Normal View.



FIGURE F.3(e) Sprinkler Piping Out of Normal Sight.

Figure F.4(b) and Figure F.4(c) illustrate projected, or linear, beam-type sensors. These sensors consist of two separate components: a transmitter that projects a narrow light beam and the corresponding optical receiver that monitors the intensity of the light. In certain installations, the transmitter and the receiver are in the same housing with a reflector at the other end of the space. The main advantage of projected beam detection over spot sensors is that it can cover larger areas without placing numerous sensors along the ceiling. Such an arrangement is ideally suited for aesthetically significant open spaces where numerous spot sensors would otherwise be required.

Figure F.4(b) shows a large historic room protected by a set of linear beam smoke detectors. The transmitter and the receiver are placed on opposite walls, avoiding the placement of detectors on the ceiling assembly. A beam detector transmitter and receiver can typically be set up to 300 ft (100 m) apart.

The projected beam smoke detector in Figure F.4(c) transmits a narrow light beam to a similar appearing receiver on the opposite wall.

Figure F.4(d) illustrates how the required manual fire alarm pull station was mounted on a bollard, avoiding the need to cut into the historic wall materials.

--`,,```,,,,````-`-`,,`,,`,`,,`---

Copyright National Fire Protection Association
Provided by IHS under license with NFPA
No reproduction or networking permitted without license from IHS
Not for Resale

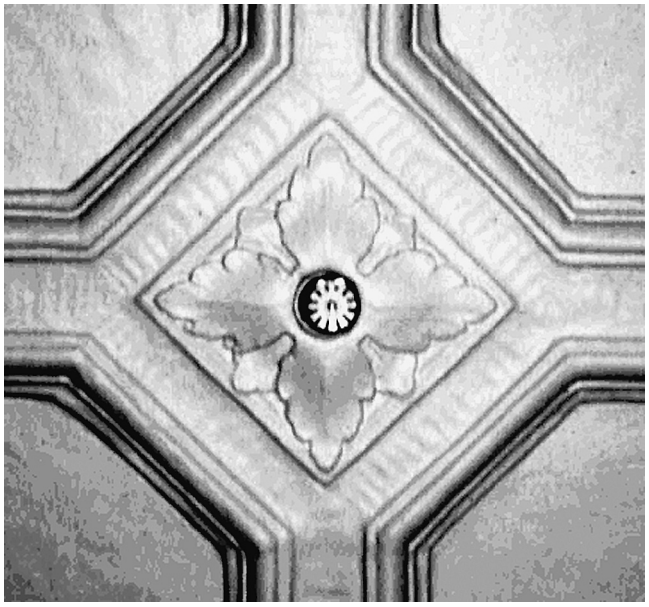

FIGURE F.3(f) Sprinkler in Rosette.

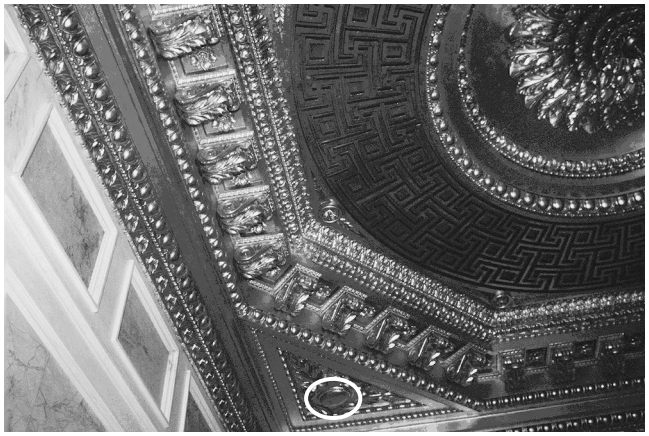

FIGURE F.4(a) Color-Matched Smoke Sensor.



FIGURE F.4(b) Linear Beam Smoke Detector Protected Room.



FIGURE F.4(c) Linear Beam Smoke Detector.

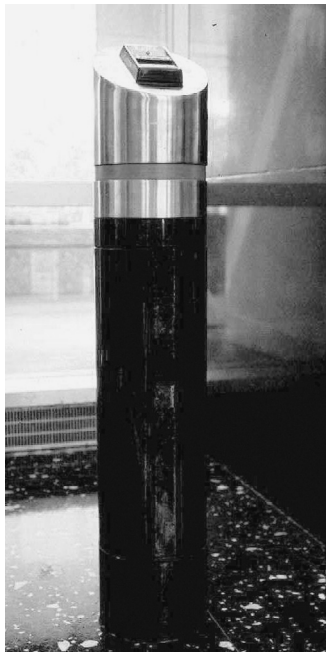

FIGURE F.4(d) Bollard-Mounted Fire Alarm Station.

Copyright National Fire Protection Association
Provided by IHS under license with NFPA
No reproduction or networking permitted without license from IHS
Not for Resale

Annex G Performance-Based Fire Safety Code Compliance

This annex is not a part of the requirements of this NFPA document but is included for informational purposes only.

G.1 Chapter 9 of this code provides requirements for the evaluation of a performance-based life safety and fire protection design. The evaluation process is summarized in Figure G.1.

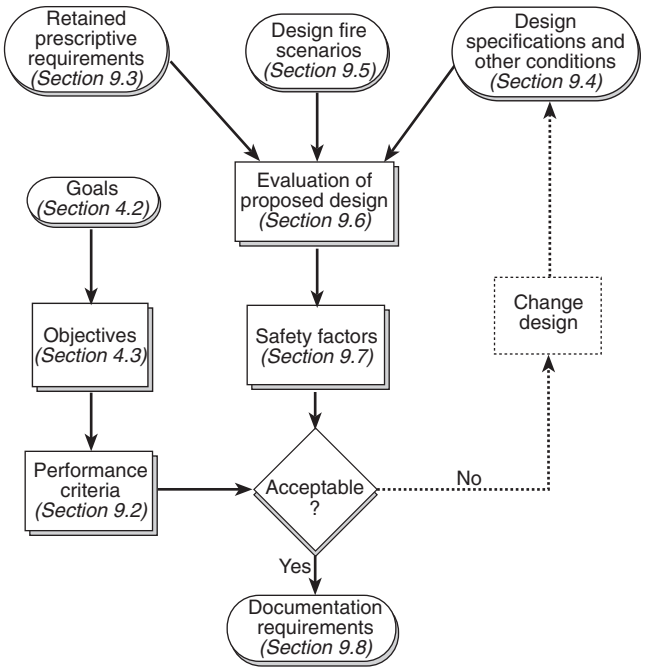

FIGURE G.1 Performance-Based Fire Safety Code Compliance Process. [*101*:A.5.1.1]

G.1.1 Code Criteria. On the left side of Figure G.1 is input from the code. The life safety and historic preservation goals are stated in Section 4.2, and the objectives necessary to achieve those goals are stated in Section 4.3. Section 9.2, Performance Criteria, specifies the measures that are to be used to determine whether the objectives have been met.

G.1.2 Input. At the top of Figure G.1 is the input necessary to evaluate a fire safety design.

G.1.3 Design Specifications. The design specifications need to include certain retained prescriptive requirements as specified in Section 9.3. All assumptions about the life safety design, fire safety design, and the response of the building and its occupants to a fire must be clearly stated, as indicated in Section 9.4. Scenarios are used to assess the adequacy of the design. Eight sets of initiating events are specified for which the ensuing outcomes need to be satisfactory.

G.1.4 Performance Assessment. Appropriate methods for assessing performance are to be used per Section 9.6. Safety factors need to be applied to account for uncertainties in the assessment, as stated in Section 9.7. If the resulting predicted outcome of the scenarios is bound by the performance criteria, then the objectives have been met and the fire safety design, coupled with the goal of maintaining the historic character of the building under evaluation, is considered to be in compliance with this code. Although not part of this code, a design that fails to comply can be changed and reassessed, as indicated on the right side of Figure G.1.

G.1.5 Documentation. The approval and acceptance of a fire safety design depend on the quality of the documentation of the process. Section 9.8 specifies the minimum set of documentation that needs to accompany a submission.

G.2 The performance option of this code establishes acceptable levels of risk to occupants of buildings and structures, as addressed in Section 4.2. These risks are also used to evaluate the degree or extent to which the proposed designs will alter or affect the historically significant features of the property. While the performance option of this code does contain goals, objectives, and performance criteria necessary to provide an acceptable level of risk to occupants, it does not describe how to meet the goals, objectives, and performance criteria. Design and engineering are needed to develop solutions that meet the provisions of this chapter. The *SFPE Engineering Guide to Performance-Based Fire Protection Analysis and Design of Buildings* provides a framework for these assessments. Other useful references include the *Australian Fire Engineering Guidelines* and the *British Standard Firesafety Engineering in Buildings*.

Copyright National Fire Protection Association
Provided by IHS under license with NFPA
No reproduction or networking permitted without license from IHS
Not for Resale

Annex H Methods to Determine Untenable Conditions

This annex is not a part of the requirements of this NFPA document but is included for informational purposes only.

H.1 Four methods can be used to avoid exposing occupants to untenable conditions:

(1) Prevent incapacitation by fire effects
(2) Ensure full evacuation prior to untenable conditions
(3) Contain effects of smoke and toxic gas
(4) Contain all fire effects

H.2 Prevent Incapacitation by Fire Effects. The design team could set detailed performance criteria that would ensure that occupants are not incapacitated by fire effects. The *SFPE Engineering Guide to Performance-Based Fire Protection Analysis and Design of Buildings* describes a process of establishing tenability limits. That guide references D. A. Purser, who in the *SFPE Handbook of Fire Protection Engineering* describes a fractional effective dose (FED) calculation approach *(see also NFPA* 269, *Standard Test Method for Developing Toxic Potency Data for Use in Fire Hazard Modeling)*. FED addresses carbon monoxide, hydrogen cyanide, carbon dioxide, hydrogen chloride, hydrogen bromide, and anoxia effects. It is possible to use the test data, combined with laboratory experience, to estimate what FED would lead to the survival of virtually all people. That value is approximately 0.8.

There is a relationship between exposures leading to death and those leading to incapacitation. Kaplan found that rodent susceptibility is similar to that of humans, and that for the narcotic gases (carbon monoxide and hydrogen cyanide), human incapacitation occurs at one-third to one-half the lethal exposure. Gann found that carbon monoxide dominates the lethality of fire smoke, since most fire deaths occur remote from the fire room and from fires that have proceeded past flashover. Thus, if the FED value of 0.8 were used for a nonlethal exposure, an FED of 0.3 would be reasonable for a nonincapacitating exposure.

If the AHJ or the design professional is concerned with potential toxic fire effects other than those addressed by the FED procedure as documented, the calculation procedure can be expanded by adding additional terms to the FED equation, where each term has the form of a ratio. The numerator of the ratio is the cumulative exposure to that fire effect, measured as an integral of the product of instantaneous exposure (concentration for toxic products) and time. The denominator of the ratio is the quantity of cumulative exposure for which FED equals the chosen threshold value (e.g., 0.8 or 0.3) based on that fire effect alone.

The American Society for Testing and Materials (ASTM) is actively considering standards that would extend the list of toxic fire effects with standard values.

If the authority having jurisdiction or the design professional is concerned with potential fire effects other than toxicity, the calculation procedure can be modified to include other fire effects, such as thermal effects.

For buildings where an unusually large fraction of the occupants would be especially vulnerable, the calculation procedure should be modified to use FED values lower than those cited above.

H.3 Full Evacuation Prior to Untenable Conditions. For each design fire scenario and the design specifications, conditions, and assumptions, the design team could demonstrate that each room or area would be fully evacuated before the smoke and toxic gas layer in that room descended to a level lower than 6 ft (1.8 m) above the floor. This procedure requires that no occupant would be exposed to fire effects. It requires calculation of the locations, movement, and behavior of occupants, because it keeps fire effects and occupants separate by moving the occupants. A level of 6 ft (1.6 m) is often used in calculations, but with that level, a large fraction of the population would not be able to stand, walk, or run normally and still avoid inhalation of toxic gases. They would have to bend over or otherwise move their heads closer to the floor level.

H.4 Containment of Effects of Smoke and Toxic Gas. For each design fire scenario and the design specifications and assumptions, the design team could demonstrate that the smoke and toxic gas layer will not descend to a level lower than 6 ft (1.8 m) above the floor in any occupied room. The advantage of this procedure is that it conservatively requires that no occupant would be exposed to fire effects, regardless of where occupants were or where they moved. This option removes the need to make any calculations regarding occupants, including their behavior, movement locations, pre-fire characteristics, and reactions to fire effects. This procedure is even more conservative and simpler than the procedure in Section H.2, because it does not allow fire effects in occupied rooms to develop to a point where people could be affected even after there are no people present to be affected.

H.5 Containment of All Fire Effects. For each design fire scenario and the design specifications and assumptions, the design team could demonstrate that no fire effects would reach any occupied room. The advantage of this procedure is that it removes the need to make any calculations regarding occupants, including their behavior, movement, locations, pre-fire characteristics, and reactions to fire effects. A further advantage is that it also removes the need for some of the modeling of fire effects, because it is not necessary to model the filling of rooms, only the spread of fire effects to those rooms. This is even more conservative and simpler than the procedures in H.2 and H.3, because it does not allow any fire effects in occupied rooms.

Copyright National Fire Protection Association
Provided by IHS under license with NFPA
No reproduction or networking permitted without license from IHS
Not for Resale

Annex I Assessment Methods

This annex is not a part of the requirements of this NFPA document but is included for informational purposes only.

I.1 General. The *SFPE Engineering Guide to Performance-Based Fire Protection Analysis and Design of Buildings* outlines a process for evaluating whether trial designs meet the performance criteria during the design fire scenarios.

Procedures described in Sections 9.2 and 9.4 identify required design fire scenarios within which a proposed fire safety design needs to perform and the associated untenable conditions that need to be avoided in order to maintain life safety. Additionally, this same process should be used to establish the level of tolerance that specific contents, building features, or both, can sustain without incurring irreparable damage. This annex discusses methods that form the link from the scenarios and criteria to the goals and objectives.

I.2 Assessment Methods. Assessment methods are used to demonstrate that the proposed design will achieve the stated goals and objectives by providing information indicating that the performance criteria of Section 9.2 can be adequately met. Assessment methods can be either tests or modeling.

I.2.1 Tests. Test results can be directly used to assess a fire safety design when they accurately represent the scenarios developed by using Section 9.4 and when they provide output data matching the performance criteria in Section 9.2. Because the performance criteria for this code are stated in terms of human exposure to lethal fire effects, no test suffices. However, tests are needed to produce data for use in models and other calculation methods. Likewise, there are few specific data regarding the impact of smoke, heat, and flame on dated fabric, materials, and construction materials. When possible, anecdotal information, tests on like materials, or both can be necessary to establish credible damage limits on these materials.

Subsections I.2.1.1 through I.2.1.6 provide further information on types of tests and uses of data.

I.2.1.1 Standardized Tests. Standardized tests are conducted on various systems and components to determine whether they meet some predetermined, typically prescriptive, criteria. Results are given on a pass/fail basis: either the test specimen does or does not meet the pre-established criteria. The actual performance of the test specimen is not usually recorded.

I.2.1.2 Scale. Tests can be either small scale, intermediate scale, or full scale. Small-scale tests are used to test activation of detection and suppression devices and the flammability and toxicity of materials. Usually, the item to be tested is placed in the testing device or apparatus. Intermediate-scale tests can be used to determine the adequacy of system components (e.g., doors and windows, as opposed to entire systems). The difference between small scale and intermediate scale is usually one of definition provided by those conducting the test. Full-scale tests typically are used to test building and structural components or entire systems. The difference between intermediate scale and large scale is also subject to the definition of those performing the test. Full-scale tests are intended to most closely depict performance of the test subject as installed in the field (i.e., most closely represent real-world performance).

Full-scale building evacuations can provide information on how the evacuation of a structure is likely to occur for an existing building with a given population but without subjecting occupants to the real physical or psychological effects of a fire.

I.2.1.3 Data Uses. The data obtained from standardized tests have three uses for verification purposes:

(1) The test results can be used instead of a model. This typically is the role of full-scale test results.
(2) The test results can be used as a basis for validating the model. If the model predictions match well with the test results, the model can be used in situations similar to the test scenario.
(3) The test results can be used as input to models. This typically is the use of small-scale tests, specifically flammability tests.

I.2.1.4 Start-Up Test. Start-up test results can be used to demonstrate that the fire safety system performs as designed. The system design can be based on modeling. If the start-up test indicates a deficiency, the system needs to be adjusted and retested until it can be demonstrated that the design can meet the performance criteria. Typically, start-up tests apply only to the installation to which they are designed.

I.2.1.5 Experimental Data. Experimental data from nonstandardized tests can be used when the specified scenario and the experimental setup are similar. Typically, experimental data are applicable to a greater variety of scenarios than are standardized test results.

I.2.1.6 Human and Organizational Performance Tests. Certain tests determine whether inputs used to determine human performance criteria remain valid during the occupancy of a building. Tests of human and organizational performance might include any of the following:

(1) Measuring evacuation times during fire drills
(2) Querying emergency response team members to determine whether they know required procedures
(3) Conducting field tests to ensure that emergency response team members can execute tasks within predetermined times and accuracy limits (Design proposals should include descriptions of any tests that are needed to determine whether stated goals, objectives, and performance criteria are being met.)

I.2.2 Modeling. Models can be used to predict the performance criteria for a given scenario. Because of the limitations on use of tests alone for this purpose, models are expected to be used in most, if not all, performance-based design assessments.

Fire models do not model fires; they model the effects of a [user-] specified fire (i.e., a heat release rate curve is input). For ease of use, the term *fire model* is used in this discussion instead of the more accurate *fire effects model*.

The effects of fire and its toxic products on the occupants can be modeled, as can the movement and behavior of occupants during the fire incident. The term *evacuation model* is used to describe models that predict the location and movements of occupants, and the term *tenability model* is used to describe models that predict the effects on occupants of specified levels of exposure to fire affects. The term *exposure model* is used to describe models that replicate the movement of smoke and heat and tell how smoke and heat can potentially affect the fabric of the material or content.

Subsections I.2.2.1 through I.2.2.4 provide further information on fire models.

Copyright National Fire Protection Association
Provided by IHS under license with NFPA
No reproduction or networking permitted without license from IHS
Not for Resale

I.2.2.1 Types of Fire Models. Fire models are used to predict fire-related performance criteria. Fire models can be either probabilistic or deterministic. Several types of deterministic models are available: computational fluid dynamics (CFD), or field, models, zone models, purpose-built models, and hand calculations. Probabilistic fire models are also available, but they are less likely to be used for this purpose.

Probabilistic fire models use the probabilities as well as the severity of various events as the basis of evaluation. Some probabilistic models incorporate deterministic models, but this is not a requirement. Probabilistic models attempt to predict the probability and severity associated with an unwanted fire (e.g., likelihood of an expected loss), which can be thought of as the probability-weighted average severity across all possible scenarios. Probabilistic models can be manifested as fault or event trees or to other system models that use frequency or probability data as input. These models tend to be manifested as computer software, but this is not a requirement. Furthermore, the discussion in Section I.3 can also be applied to probabilistic models, although that section concentrates on deterministic models.

CFD models provide the most accurate predictions of all the deterministic models because they divide a given space into thousands of smaller volumes. However, they are still models and as such are not absolute in their depiction of reality. In addition, they are much more expensive to use because they are computationally intensive. Because of their expense, complexity, and intensive computational needs, CFD models require much greater scrutiny than do zone models. It is much more difficult to provide multiple runs of CFD models to check sensitivity to a variety of factors such as design fire cell resolution or ventilation.

Zone models are more widely used than CFD models because they provide reasonably accurate predictions in much less time. It is easier to assess sensitivity of different parameters with zone models, because they generally run much faster and the output is much easier to interpret. Prediction of fire growth and spread has a large number of variables associated with it; consequently, the zone models with their crudeness and speed have advantages over the more complex CFD models.

Purpose-built models (also known as stand-alone models) are similar to zone models in their ease of use. However, purpose-built models do not provide a comprehensive model; instead, they predict the value of one variable of interest. For example, a specific purpose-built model could predict the conditions of a ceiling jet at a specified location under a ceiling, while a zone model would approximate fire conditions throughout a zone (specified area) of the enclosure.

Purpose-built models might or might not be manifested as computer software. Those that are not manifested as such are referred to as hand calculations. These purpose-built models are, therefore, simple enough that the data management capabilities of a computer are not necessary. Many of these calculations are found in the *SFPE Handbook of Fire Protection Engineering*.

I.2.2.2 Types of Evacuation Models. Three categories of evacuation models can be considered: single-parameter estimation methods, movement models, and behavioral simulation models.

Single-parameter estimations are generally used for simple estimates of movement time. They are usually based on equations derived from observations of movement in non-emergency situations. They can be hand calculations or simple computer models. Examples include calculation methods for flow times based on widths of exit paths and travel times based on travel distances. Sources for these methods include the *SFPE Handbook of Fire Protection Engineering* and the NFPA *Fire Protection Handbook*.

Movement models generally handle large numbers of people in a network flow similar to water in pipes or ball bearings in chutes. They tend to optimize occupant behavior, resulting in predicted evacuation times that can be unrealistic and far from conservative. However, they can be useful in an overall assessment of a design, especially in early evaluation stages, where an unacceptable result with this sort of model indicates that the design has failed to achieve life safety objectives.

Behavioral simulation models take into consideration more of the variables related to occupant movement and behavior. Occupants are treated as individuals and can have characteristics assigned to them uniquely, allowing a more realistic simulation of the design under consideration. However, given the limited availability of data for the development of these models, for their verification by their authors, or for input when using them, their predictive reliability is questionable.

I.2.2.3 Tenability Models. In general, models will be needed here only to automate calculations over time-of-exposure effect equations referenced in A.9.2.2.1.

I.2.2.4 Other Models. Models can be used to describe combustion (as noted, most "fire models" characterize only fire effects), automatic system performance, and other elements of the calculation. Few models are in common use for those purposes, so they are not described further here.

I.3 Sources of Models. Compendia of computer fire models are found in Olenick and Carpenter's "An Updated International Survey of Computer Models for Fire and Smoke." That reference contains models that were developed by the Building Fire Research Laboratory of the National Institute of Standards and Technology and that can be downloaded from the Internet at http://www.bfrl.nist.gov/864/fmabs.html. Evacuation models in all three categories are discussed in the *SFPE Handbook of Fire Protection Engineering* and the NFPA *Fire Protection Handbook*.

I.4 Validation. Models undergo limited validation. Most can be considered demonstrated only for the experimental results they were based on or the limited set of scenarios to which the model developers compared the model's output.

A Society of Fire Protection Engineers (SFPE) task group independently evaluates computer models. As of January 1998, the task group was preparing to finish its first evaluation and had chosen a second model to evaluate. Until more models can be independently evaluated, the model user must rely on the available documentation and previous experience for guidance regarding the appropriate use of a given model.

The design professional should present the strength of the evidence presented for the validity, accuracy, relevance, and precision of the proposed methods. The authority having jurisdiction, when deciding whether to approve a proposal, should consider those data as well. An element in establishing the strength of scientific evidence is the extent of external review and acceptance of the evidence by peers of the authors of that evidence.

Models have limitations, and most are not user friendly; therefore, experienced users will be able to construct more reasonable models and better interpret output than novices. It is for those reasons that the third-party review and equivalency sections are provided. These statements are not meant to discourage the use of models but rather to indicate that they need to be used with caution and by those well versed in their nuances.

Copyright National Fire Protection Association
Provided by IHS under license with NFPA
No reproduction or networking permitted without license from IHS
Not for Resale

I.5 Input Data. The first step in using a model is to develop the input data.

The heat release rate curve specified by the user is the driving force of a fire effects model. If this curve is incorrectly defined, the subsequent results are not usable. In addition to the smoldering and growth phases that are specified as part of the scenario definition, two additional phases are needed to complete the input heat release rate curve: steady burning and burnout.

Steady burning is characterized by its duration, which is a function of the total amount of fuel available to be burned. In determining the duration of this phase, the designer needs to consider how much fuel is assumed to be consumed in the smoldering and growth phases and how much is assumed to be consumed in the burnout phase that follows. A common assumption is that the burnout phase is the mirror image of the preceding phases, with a reversed heat release rate curve and the same amount of fuel consumed in the burnout phase as in the growth phase. Depending on the assumptions made regarding the amount of fuel consumed during burnout, the time at which this phase starts should be easy to determine.

Bear in mind that the preceding discussion assumes that the burning objects are solid (e.g., table, chairs). If liquid or gaseous fuels are involved, the shape of the curve will be different. For example, smoldering is not relevant for burning liquids or gases, and the growth period is very short, typically measured in seconds. [Peak heat release rate depends primarily on the rate of release, on the leak rate (gases and liquid sprays), or on the extent of spill (pooled liquids).] The steady burning phase is once again dependent on the amount of fuel available to burn. Like the growth phase, the burnout phase is typically short (e.g., closing of a valve), although it is conceivable that longer times can be appropriate, depending on the extinguishment scenario.

Material properties are needed (usually) for all fuel items (initial and secondary), as well as the enclosure surfaces of involved rooms or spaces.

For all fires of consequence, it is reasonable to assume that the fire receives adequate ventilation. If there is insufficient oxygen, the fire will not be sustained and will go out. An overabundance of oxygen is only a concern in special cases (e.g., hermetically sealed spaces), when a fire does not occur due to dilution of the fuel (i.e., a flammable mixture is not produced). Therefore, given that the scenarios of interest can occur in nonhermetically sealed enclosures, it is reasonable to assume that adequate ventilation is available and that if a fire starts it will continue to burn until it either runs out of fuel or is extinguished by other means. The only variable that would need to be assumed is the total vent width.

Maximum fire extent is affected by two geometric aspects: proximity of a burning object to walls and overall enclosure dimensions.

Conservatively, when a fire is considered to be "against a wall" or "in a corner," the effective heat release of the fire can be doubled and quadrupled, respectively. For the burning object to be considered against the wall or in the corner, it needs to be either touching the enclosure surface or within 2 in. (50.8 mm). The reasoning behind this convention is that a wall effectively cuts the fire plume in half, while a corner results in one-quarter of the plume if the burning object is closer to the center of the room. Conceptually, the same amount of combustible vapors is produced, regardless of the burning object's position, but the presence of walls or corners results in a smaller volume in which to burn them. In other words, walls and corners effectively concentrate the flammable vapors resulting from pyrolysis of the fuel.

The room dimensions affect the time required for a room to reach flashover. Simply stated, for a given amount and type of fuel under the same ventilation conditions, a small room will reach flashover before a large room will. In a large room with a small amount of fuel, a fire will behave as if it is outside (i.e., with adequate oxygen to burn and no concentration of heat). If the fuel package is unchanged but the dimensions of the room are decreased, the room will begin to have an affect on the fire (assuming adequate ventilation). The presence of the [relatively smaller] enclosure results in the buildup of a hot layer of smoke and other products of combustion under the ceiling. This in turn feeds more heat back to the seat of the fire, which results in an increase in the pyrolysis rate of the fuel and thus increases the amount of heat energy released by the fire. The room enclosure surfaces themselves also contribute to this radiation feedback effect.

Probabilistic data are expressed as either a frequency (units of inverse time) or a probability (unitless but applicable to a stated period of time). An example of the former is an expected number of failures per year, and the range of the latter is between 0 and 1, inclusive. Probabilities can be either objective or subjective. Subjective probabilities express a degree of belief that an event will occur. Objective probabilities are based on historical data and can be expressed as a reliability (of a component, system, etc.).

Copyright National Fire Protection Association
Provided by IHS under license with NFPA
No reproduction or networking permitted without license from IHS
Not for Resale

Annex J Fire Safety Inspection Forms

This annex is not a part of the requirements of this NFPA document but is included for informational purposes only.

J.1 Monthly Fire Protection Self-Inspection Checklist. The following checklist should be used as a reminder during inspections. Items requiring corrective action should be reported on a Notice of Fire Hazard form (see Figure J.1).

X Satisfactory 0 Correction required / Not applicable

Life Safety

- ❑ Ability to use exit doors is not hampered by security measures during occupancy.
- ❑ Stairwell and hallway fire doors are kept in the closed position.
- ❑ Stairwells and evacuation routes are free and clear of obstructions.
- ❑ Fire escape stairs appear to be in good condition.
- ❑ Emergency lighting units operate when tested.
- ❑ Exterior emergency exit routes are clear and free from snow and ice.
- ❑ Illuminated exit signs are all lit, not blocked, and can be easily seen.

Fire Protection Equipment

- ❑ Portable fire extinguishers are in their proper location and fully charged and tagged.
- ❑ A space of at least 18 in. (457 mm) is kept between sprinklers and materials.
- ❑ Fire hose cabinets are in good order, easily visible, and accessible.
- ❑ Fire detectors are free from obstructions.
- ❑ Sprinkler control valves are open and locked or secured, and dry pipe systems register at normal air pressures.
- ❑ Sprinkler tanks, piping, and supports appear in good condition.
- ❑ Alarm systems function and are tested regularly.
- ❑ Lightning arresters appear in good condition.

Housekeeping and Storage

- ❑ Rubbish is not left to accumulate in excessive quantities; trash receptacles are emptied daily.
- ❑ Storage areas are kept clean and orderly; cleaning materials are safely stored.
- ❑ Combustible materials are not kept in unprotected areas such as a crawlspace.
- ❑ Roof scuppers and drains are unobstructed. Roof covering is in good condition.
- ❑ Aisles are unobstructed.

Hazardous Liquids

- ❑ Emergency measures are posted in case of accidental spills.
- ❑ Flammable/combustible liquids are kept in approved safety containers.
- ❑ Flammable/combustible liquids are stored in an approved cabinet.
- ❑ Safety storage cabinet vents are clear of obstructions.
- ❑ Soiled rags are kept in an approved self-closing waste container.
- ❑ Portable fire extinguishers are in their place and of the proper type.

Exhibits/Collections/Book Stacks

- ❑ Exhibits and collections are not overcrowded.
- ❑ Exhibit case lights do not show signs of overheating.
- ❑ Exhibits are not blocking exit routes or access to fire protection equipment.
- ❑ Extension cords are not used.
- ❑ All vertical and horizontal openings in fire barriers are firestopped.
- ❑ Salvage equipment and materials are provided and accessible.
- ❑ The fire department is familiar with and has access to these areas.
- ❑ Smoking regulations are enforced with employees and visitors.
- ❑ Temporary wiring conforms with NFPA 70, *National Electrical Code®*.

Auditoriums and Classrooms

- ❑ Safe capacity is posted and enforced.
- ❑ Standing and sitting in aisles are prohibited.
- ❑ Smoking regulations are enforced.

Restaurants and Eating Areas

- ❑ Safe capacity is posted and enforced.
- ❑ Aisles and exit routes are unobstructed and illuminated.
- ❑ Ranges, hoods, and exhaust ducts are clean.

Shops/Laboratories/Packing Areas

- ❑ Laboratory wastes are disposed of daily, using appropriate precautions.
- ❑ Spray coating facilities are safely ventilated, and scrubbers and filters are clean.
- ❑ Electrical equipment in areas near where flammable liquids are in use are explosionproof.
- ❑ Electrical appliances have warning lights and are unplugged when not in use.
- ❑ Employees are aware of special hazards and trained in necessary special precautions.
- ❑ Entry is limited to authorized persons.
- ❑ Power tools and machines are grounded.
- ❑ Woodworking equipment dust collectors are functioning adequately and collector bins emptied regularly.
- ❑ Power tools are unplugged when not in use.

Exterior and Environment

- ❑ All exits, emergency exits, and fire escapes afford unobstructed passage to a safe area.
- ❑ Grounds surrounding the facility are clear of accumulations of combustible material and brush.
- ❑ Fire service access is maintained clear.
- ❑ Fire hydrants and sprinkler system siamese connections are visible, accessible, and operable.

Personnel/Training

- ❑ All staff members know how to transmit a fire alarm.
- ❑ All emergency team members have received training and are aware of their assigned duties.
- ❑ All staff members have received training in the use of portable extinguishers and fire prevention.

Copyright National Fire Protection Association
Provided by IHS under license with NFPA
No reproduction or networking permitted without license from IHS
Not for Resale

Building Changes Since Last Inspection

- ❑ Do not interfere with fire detection or fire suppression systems.
- ❑ Do not contribute unreasonable fire loading.
- ❑ Do not create vertical and horizontal openings in fire-rated walls and ceilings.

Notice of Hazard Forms

- ❑ **Items requiring action have been noted on Notice of Hazard forms.** (See Figure J.1.)

Area inspected: _____

Inspected by: _____

Date of inspection:_____

FIGURE J.1 Form for Reporting Fire Hazards Requiring Corrective Action.

NOTICE OF FIRE HAZARD

DATE REPORTED:_____ **HAZARD CONTROL NO.:** _____
AREA WHERE HAZARD WAS NOTICED:_____

THE FOLLOWING HAZARD WAS NOTICED:

_____
_____
_____
_____
_____
_____

THE POTENTIAL RISK IS AS FOLLOWS:

_____
_____
_____
_____
_____
_____

THE FOLLOWING ACTION IS RECOMMENDED:

_____
_____
_____
_____

Reported to: _____ (print name)

Reported by: _____ (print name)

Copyright National Fire Protection Association
Provided by IHS under license with NFPA
No reproduction or networking permitted without license from IHS
Not for Resale

Annex K Fire System Maintenance Checklists

This annex is not a part of the requirements of this NFPA document but is included for informational purposes only

.

K.1 Maintenance of Automatic Sprinkler and Standpipe Systems. Each alarm, dry pipe, preaction, and deluge valve should have maintenance tags (annual, 5-year, 50-year, and so forth) attached for recording the inspector's initials, date, pressure readings, and confirmation on maintenance/inspections performed on the system. Checklists detailing maintenance should be kept by the office responsible for maintenance. All problems noted should be corrected before initialing the maintenance tag.

During any renovation or inspection of an automatic sprinkler system, the following should be reported to the facility manager for correction:

(1) Sprinklers that are damaged, blocked by storage, painted, or otherwise impaired. (Construction, occupancy changes and changes to heating, lighting, and air-conditioning systems might require relocating, adding, or replacing sprinklers.)
(2) Pipe hangers with mechanical injury and corrosion.

General Requirements for All Sprinkler and Standpipe Systems

- ❑ Annually, inspect water pressure and air pressure gauges to make sure they are within normal range. Investigate a loss of pressure of more than 10 percent. Record new pressure readings on the attached tag.
- ❑ Annually, inspect control valve labels to ensure they are accurate. Replace missing signs and relabel inaccurate signs.
- ❑ Annually, inspect fire department connections to make sure that inlets are unobstructed, that the protective caps are in place, that the connections are conspicuously marked and accessible for the fire department, and that hose threads are in good condition.
- ❑ Annually, lubricate each valve stem and reseal to prevent leaks.
- ❑ Annually, close and reopen each post indicator and Outside Stem and Yoke (OS&Y) valve.
- ❑ Annually, inspect fire department connections before freezing weather. The connection should be drained through the ball drip from the check valve to ensure it will not freeze.
- ❑ Every 5 years, replace the gaskets in check valves.
- ❑ Every 5 years, recalibrate and/or replace pressure gauges, if necessary.
- ❑ Fifty years after installation, remove a representative sample of sprinklers (at least two per floor) and have them operationally tested at a testing laboratory. Based on tests, replace sprinklers if necessary. Test a sampling of the sprinklers every 10 years thereafter.
- ❑ Fifty years after installation, inspect the sprinkler system in at least five remote and low-point locations to determine the degree of pipe corrosion. Where corrosion is found, have a fire protection engineer or sprinkler designer determine the hydraulic performance of the sprinkler system.

Wet Pipe and Antifreeze Systems

- ❑ Annually, open the inspector's test connection and test all alarms (water motor alarm and/or flow/pressure switch).
- ❑ Annually, before freezing weather, test the freezing point of antifreeze solutions with a hydrometer. Maintain the solution below the estimated minimum temperature.
- ❑ Annually, make sure wet pipe systems are properly protected from freezing.

Dry, Deluge, and Preaction Systems

- ❑ Annually, before freezing weather, operate the heating system in enclosures housing valves to ensure temperature can be maintained above 5.5°C (42°F).
- ❑ Annually, before freezing weather, open all low-point drains to remove condensation and clean plugged or obstructed sprinklers.
- ❑ Annually, remove face plates of dry, deluge, and preaction valves and examine interior for corrosion and condition of gasket.
- ❑ Annually, trip test the dry pipe, deluge, or preaction valve. Ensure quick opening devices operate properly. Once the main valve trips, quickly close the control valve.
- ❑ Every 3 years, flush system with water. The system should be filled with water for 2 days before flushing to allow pipe scale and deposits to soften. Drain system and then flush. Flush cross mains first by attaching 50 mm (2 in.) fire hose at the end of the cross main. Flow water until clear. Also, record the residual water pressure from the supply-side water pressure gauge. Remove and reinstall all pendent sprinklers after flushing is complete.
- ❑ Annually, activate preaction and deluge systems by operating the fire detection devices. Close the control valve to prohibit water from entering the system.
- ❑ Annually, lubricate air compressors on preaction and dry systems in accordance with manufacturer recommendations.
- ❑ Annually, test low air pressure alarm on preaction and dry systems. Close the water supply valve. Slowly release air from the system by slowly opening the inspector's test valve. Release enough pressure to sound the alarm. Avoid tripping the dry pipe valve.
- ❑ Quarterly, determine dry pipe system priming water level by slowly opening the priming water level test valve. If only air escapes, close the test valve and add about one quart of water. Repeat the procedure until water comes out of the test valve.
- ❑ Annually, flow test open sprinklers on deluge sprinkler systems during warm weather.

K.2 Maintenance of Fire Detection and Alarm Systems. Fire detection and alarm systems should be tested at regular intervals. Test methods and frequency of tests should be in accordance with *NFPA 72®*, *National Fire Alarm Code®*. Some of the tests that should be performed are as follows.

Alarms

- ❑ Annually, test audible devices, visible devices, and emergency voice/alarm communication equipment.

Control and Annunciation Units

- ❑ Quarterly, for unmonitored systems, and annually, for monitored systems, test all functions, interfaced equipment, main and standby power supply, and fuses.

Copyright National Fire Protection Association
Provided by IHS under license with NFPA
No reproduction or networking permitted without license from IHS
Not for Resale

Batteries

- ❑ Annually, test the charger. Conduct a 30-minute discharge test semiannually, for lead acid batteries, and annually, for nickel-cadmium batteries.

Alarm Initiation Devices

- ❑ Annually, test all smoke detectors, fire alarm boxes, and restorable heat detectors. Smoke detector sensitivity should be checked as detailed in *NFPA 72*.
- ❑ Other tests, depending on the type of fire alarm system installed, should be conducted as detailed in *NFPA 72*.

K.3 Maintenance of Fire Hose Stations. Where fire hose is allowed, hose stations should have monthly and annual (all-weather) maintenance tags attached for recording the inspector's initials, date, and confirmation on maintenance/inspections performed on the system. Checklists detailing maintenance should be kept by the office responsible for maintenance. All problems noted should be corrected before initialing the maintenance tag.

- ❑ Inspect fire hose stations monthly. Hose stations need to contain a minimum of 45 m (150 ft) of hose, a hose nozzle, and a hydrant wrench. Hose should not be damaged or show mildew. Hose needs to be neatly rolled or racked.
- ❑ Test nozzles monthly to confirm that they can be easily opened and closed.
- ❑ Rerack or rewind hose annually.

K.4 Maintenance of Fire Hydrants. Fire hydrants should have annual maintenance tags attached for recording the inspector's initials, date, and confirmation on maintenance/inspections performed on the system. Checklists detailing maintenance should be kept by the office responsible for maintenance. All problems noted should be corrected before initialing the maintenance tag.

- ❑ Annually, inspect fire hydrants in the fall to ensure the following:
  - (1) Tightness of hydrant outlet
  - (2) No leaks in top of hydrant
  - (3) No cracks in hydrant barrel
  - (4) Hydrant drain is clear
  - (5) Turning nut is not worn down with rounded corners
  - (6) Undamaged nozzle threads
- ❑ Annually, lubricate operating nut, parking, and trust collars.
- ❑ Annually, perform a flow test to check for proper hydrant operation and to test the available water supply in accordance with NFPA 291, *Recommended Practice for Fire Flow Testing and Marking of Hydrants*. Flow water from each hydrant.

K.5 Maintenance of Fire Pumps. Fire pumps should have weekly and annual maintenance tags attached for recording the inspector's initials, date, and confirmation on maintenance/inspections performed on the system. Water flow meters should have 5-year maintenance tags attached. Checklists detailing maintenance should be kept by the museum. All problems noted should be corrected before initialing the maintenance tag.

Weekly

- ❑ Close system valve to avoid pressurizing the automatic sprinkler system. Turn jockey pump off and gradually release pressure in the sprinkler system to confirm that low system pressure turns fire pump on. Run pump for 10 minutes. Check for excessive heat or water leakage at packing glands. At the end of the test, confirm that the fire pump and jockey pump controllers are on automatic and that the pump supply and discharge valves and the sprinkler system valves are open.
- ❑ Record suction and discharge pressure on the maintenance tag.

Annually

- ❑ Perform annual flow test in accordance with NFPA 20, *Standard for the Installation of Stationary Pumps for Fire Protection*.
- ❑ Turn jockey pump off and gradually release pressure in the sprinkler system to confirm that low system pressure turns fire pump on.
- ❑ Confirm proper operation of remote annunciation for pump on and power supervision on fire alarm control unit.
- ❑ Close and open control valves to ensure proper operation. Also, confirm that tamper switches on control valves are operational.
- ❑ Lubricate motors and engines in accordance with manufacturer recommendations.

Every 5 Years

- ❑ Calibrate the water flow meter, if one is installed, during the annual flow test.

K.6 Maintenance of Water Storage Tanks Used for Fire Protection. Water storage tanks used for fire protection should have monthly, annual, and 5-year maintenance tags attached at the main control valve for recording the inspector's initials, date, and confirmation on maintenance/inspections performed on the system. Checklists detailing maintenance should be kept by the office responsible for maintenance. All problems noted should be corrected before initialing maintenance tag.

- ❑ Check water level in storage tanks monthly.
- ❑ Operate control valves monthly to ensure that they are properly arranged (generally open) and operational.
- ❑ Inspect storage tanks annually for the following:
  - (1) General condition of the tank, including loose scale, leaky seams or rivets, and paint
  - (2) Ladders on tanks for structural adequacy and the presence of rust
  - (3) The roof of storage tanks for structural stability and the presence of rust
  - (4) Sway bracing for elevated water storage tanks for structural adequacy and the presence of rust
- ❑ Conduct a flow test annually to make sure that equipment is performing properly, pipes are unobstructed, and appropriate valves are open. Perform in conjunction with fire hydrant annual tests (see K.4).
- ❑ Approximately every 5 years, thoroughly clean the interior and exterior of the tank and repaint. Temporary water supplies for fire protection need to be provided before the tank is drained.

Copyright National Fire Protection Association
Provided by IHS under license with NFPA
No reproduction or networking permitted without license from IHS
Not for Resale

K.7 Maintenance of Halon Systems. Halon systems should have monthly, annual, and 5-year maintenance tags attached to the halon cylinders for recording the inspector's initials, date, and confirmation on maintenance/inspections performed on the system. Checklists detailing maintenance should be kept by the office responsible for maintenance. All problems found should be corrected before initialing the maintenance tag. (Fire alarm functions should be maintained in accordance with K.1.)

Monthly

- ❑ Inspect the halon cylinders and piping for physical damage.
- ❑ Record the new pressure reading on the maintenance tag. Pressure must be within 10 percent of previous reading on the maintenance tag. Low readings require weighing the tank to confirm low pressure. Report confirmed low readings. Do not refill system.

Annually

- ❑ Weigh cylinders, and determine if weight is within 5 percent of previous reading on the maintenance tag. Record pressure on maintenance tag. Report low readings. Do not refill system.
- ❑ Operate control valves and correct any problems found.
- ❑ Perform an operational test on the system without discharging halon. (Remove the control heads from the halon cylinders and operate the fire detectors.) Correct any problems found.

Every 5 Years

- ❑ Replace rubber hoses.
- ❑ Perform a fan pressurization test in the room.

K.8 Maintenance of Emergency Generator and Emergency Lighting. Emergency generators should have weekly and annual maintenance tags attached for recording the inspector's initials, date, and confirmation of maintenance/inspections performed on the system. Checklists detailing maintenance should be kept by the office responsible for maintenance.

- ❑ Operate emergency generators weekly. Correct potential operational problems.
- ❑ Operate emergency generator under a simulated load biannually.
- ❑ Lubricate motors and engines annually in accordance with manufacturer recommendations.
- ❑ Perform an emergency lighting test biannually using the emergency generator. Fire pump(s), fire alarm systems, and electronic exit locking systems should be tested on emergency power concurrently.

K.9 Maintenance of Waterspray Systems for Kitchens. Annually, inspect contracts to confirm waterspray systems are being maintained in accordance with manufacturer recommendations, including the following:

(1) The monthly inspection of systems is done by a company specializing in the maintenance of these systems.
(2) Sprinklers are clean of grease.
(3) Gas and electric power shutoff are tested.
(4) Water-wash hood cleaning systems are operational.
(5) Sprinklers need to be replaced in accordance with manufacturer recommendations.
(6) Manual pull stations send a signal to the control room.
(7) Sprinklers are of the correct temperature rating and located directly above grease-producing equipment at the correct height.
(8) Monthly and annual maintenance tags are attached for recording the inspector's initials, date, and confirmation on maintenance/inspections performed on the system. Checklists detailing maintenance should be kept by the responsible office.

K.10 Maintenance of Dry Chemical Systems. Annually, inspect contracts to ensure dry chemical systems are being maintained in accordance with manufacturer recommendations, including the following:

(1) The monthly inspection of a system is done by a company specializing in the maintenance of these systems.
(2) Nozzles are clean of grease.
(3) Gas and electric power shutoff are tested.
(4) Water-wash hood cleaning systems are operational.
(5) Fusible links are replaced annually.
(6) Manual pull stations send a signal to the control room.
(7) Fusible links are of the correct temperature rating.
(8) Nozzles are located directly above grease-producing equipment at the correct height.
(9) Pressure on gauge is adequate.
(10) Manual release stations are operational and accessible.
(11) Monthly and annual maintenance tags are attached for recording the inspector's initials, date, and confirmation on maintenance/inspections performed on the system. Checklists detailing maintenance should be kept by the responsible office.

K.11 Maintenance of Fire Doors and Fire Dampers. Personnel responsible for maintenance should have location maps of fire doors and fire dampers and checklists detailing maintenance on each door or damper.

Fire Doors

- ❑ Annually, inspect fire doors for the following items. Correct any problems found.
  (1) Door envelope does not have punctures or broken seams.
  (2) Self-closer is intact and allows door to latch closed.
  (3) Sliding door, chains, and cables should operate smoothly over all pulleys and guides.
  (4) Doors have not been modified in the field (e.g., by the installation of louvers).
  (5) Coordinators are securely attached and adjusted properly.
  (6) Clearances around the door do not exceed the following:
    (a) Between door and frame — 3.2 mm ($^1/_8$ in.)
    (b) Between meeting edges of doors — 3.2 mm ($^1/_8$ in.)
    (c) Between bottom of door and raised sill — 9.5 mm ($^3/_8$ in.)
    (d) Between bottom of door and floor (no sill) — 19.0 mm ($^3/_4$ in.)
- ❑ Annually, test doors normally held open by automatic closing devices to confirm proper operation. Sliding doors need to be allowed to close completely to check the operation of the guides and rollers. Correct any problems found.
- ❑ Annually, lubricate guides and bearings.

Copyright National Fire Protection Association
Provided by IHS under license with NFPA
No reproduction or networking permitted without license from IHS
Not for Resale

Fire Dampers

- ❑ Annually, test fire dampers to ensure that hinges and other moving parts operate properly. Remove fusible links; operate damper; and check latch (if provided). It is desirable to operate dampers with normal system air flow to ensure that they are not held open by the air stream. Correct any problems found.
- ❑ Annually, lubricate moving parts of fire damper.

Note that smoke dampers should be tested with the operation of fire detectors in accordance with K.2.

K.12 Maintenance of Stair Pressurization and Smoke Venting Systems. Fans used for stairwell pressurization and smoke venting should have annual maintenance tags attached for recording the inspector's initials, date, and confirmation on maintenance/inspections performed on the system. Checklists detailing maintenance should be kept by the office responsible for maintenance.

- ❑ Annually, perform an air pressure test in stairwells having pressurization fans to make sure all system parts and controls are operational and design air pressures (not to exceed NFPA *101®, Life Safety Code®,* requirements) are obtained. Correct any problems found before initialing the maintenance tag.
- ❑ Annually, lubricate fan motors in accordance with manufacturer recommendations.

K.13 Maintenance of Portable Fire Extinguishers.

- ❑ Each extinguisher needs to have an inspection tag.
- ❑ Monthly, inspect extinguishers. An extinguisher inspection includes ensuring that extinguishers are fully charged, in their designated locations, physically undamaged, not tampered with, and not obstructed, and that the hydrostatic test is up to date. The inspector should initial the inspection tag after the extinguisher is found in good working order and should perform the following as needed:
  - (1) Report obstructed or out-of-place extinguishers to the building manager.
  - (2) Replace any extinguisher that is physically damaged or that has a broken or missing tamper indicator (plastic seal around the handle).
  - (3) Replace any extinguisher on which the gauge indicates "recharge" or, in the case of carbon dioxide extinguishers, when there is a weight loss of 10 percent or more (the weight is listed on the label of the extinguisher). For example, if the label indicates 15.2 kg ($33^1/_2$ lb), replace the extinguisher when the weight goes below 14.0 kg (31 lb). The weight should be checked semiannually.
  - (4) Replace any extinguisher requiring a hydrostatic test in accordance with the following dates given. Each extinguisher is marked with the date of the last hydrostatic test (e.g., 1/26/80 or 1@80). Look for the most recent date, and calculate when the extinguisher needs to be tested again. For example, a carbon dioxide extinguisher dated 1@80 should be retested in January 1985. (When an extinguisher needs to be replaced, use a spare extinguisher of the same type and at least equal rating as the one being replaced.)

Extinguisher Types	Hydrostatic Test Period
Dry chemical	12 years
Carbon dioxide	5 years
Stored water pressure	5 years
Halon	12 years

K.14 Maintenance of Lightning Protection Systems. Those responsible for maintenance/inspection should have detailed drawings of lightning protection systems and checklists detailing maintenance.

- ❑ Annually, inspect system for mechanical damage.
- ❑ Annually, test all connections for electrical resistance. If resistance to ground is more than 5 ohms, make necessary changes to reduce it to 5 ohms or less.

Copyright National Fire Protection Association
Provided by IHS under license with NFPA
No reproduction or networking permitted without license from IHS
Not for Resale

Annex L Sensitivity and Uncertainty Analysis and Safety Factors

This annex is not a part of the requirements of this NFPA document but is included for informational purposes only.

L.1 General. The assessment of precision required in 9.8.2 requires sensitivity and uncertainty analysis, which can be translated into safety factors.

L.2 Sensitivity Analysis. The first run a model user makes should be labeled as the base case, using the nominal values of the various input parameters. However, the model user should not rely on a single run to use as the basis for any performance-based fire safety system design. Ideally, each variable or parameter that the model user made to develop the nominal input data should have multiple runs associated with it, as should combinations of key variables and parameters. Thus, a sensitivity analysis should be conducted that provides the model user with data that indicate how the effects of a real fire can vary and how the response of the proposed fire safety design can also vary.

The interpretation of a model's predictions can be a difficult exercise if the model user does not have knowledge of fire dynamics or human behavior.

L.3 Reasonableness Check. The first thing the model user should try to determine is whether the predictions actually make sense (i.e., do not upset intuition or preconceived expectations). Most likely, if the results do not pass this test, an input error has been committed.

Sometimes the predictions appear to be reasonable but are, in fact, incorrect. For example, a model can predict higher temperatures farther from the fire than close to it. The values themselves can be reasonable (e.g., not hotter than the fire), but they do not "flow" down the energy as expected.

A margin of safety can be developed using the results of the sensitivity analysis, which provides the possible range of when a condition is estimated to occur, in conjunction with the performance criteria.

Safety factors and margin of safety are two concepts used to quantify the amount of uncertainty in engineering analyses. Safety factors are used to provide a margin of safety and to represent or address the gap in knowledge between the theoretically perfect model (i.e., reality) and the engineering models that can represent reality only partially.

Safety factors can be applied to either the predicted level of a physical condition or the time that the condition is predicted to occur. Thus, a physical or a temporal safety factor can be applied to any predicted condition. A predicted condition (i.e., a parameter's value) and the time it occurs are best represented as distributions. Ideally, a computer fire model predicts the expected or nominal value of the distribution. Safety factors are intended to represent the spread of these distributions.

Given the uncertainty associated with data acquisition and reduction and the limitations of computer modeling, any condition predicted by a computer model can be thought of as an expected or nominal value within a broader range. For example, an upper-layer temperature of 600°C is predicted at a given time. If the modeled scenario is then tested (i.e., in a full-scale experiment based on the computer model's input data), the actual temperature at that given time could be 640°C or 686°C. Therefore, the temperature should be reported as 600°C (+40, −16) or as a range of 686°C to 640°C.

Ideally, a prediction is reported as a nominal value, with some percentage, or as an absolute value. For example, an upper-layer temperature prediction could be reported as "600°C, 30°C" or "600°C, 6%." In this case, the physical safety factor is 0.06 (i.e., the amount by which the nominal value should be degraded and enhanced). Given the state of the art of computer fire modeling, this is a very low safety factor. Physical safety factors tend to be on the order of tens of percent; 60 percent is not unheard of.

Part of the problem with this approach is that it is difficult to state what percentage or range is appropriate. These values can be obtained when the computer model predictions are compared to test data. However, using computer fire models in a design model does not facilitate determination of the range of values since (1) the room being analyzed has not been built yet, and (2) test scenarios do not necessarily depict the intended design.

A sensitivity analysis should be performed on the assumptions that affect the condition of interest, and a base case developed that uses all nominal values for input parameters. The input parameters should be varied over reasonable ranges, and the variation in predicted output noted. This output variation can then become the basis for physical safety factors.

The temporal safety factor addresses the issue of when a condition is predicted and is a function of the rate at which processes are expected to occur. If a condition is predicted to occur 2 minutes after the start of the fire, then that time frame can be used as a nominal value. A process similar to that described above for physical safety factors can also be employed to develop temporal safety factors. In this case, however, the rates (e.g., of heat release or toxic product generation) will be varied instead of absolute values (e.g., material properties).

The margin of safety can be thought of as a reflection of societal values and can be imposed by the authority having jurisdiction to that purpose. Since the predicted time for a condition will most likely be the focus of authorities having jurisdiction (e.g., the model predicts occupants will have 5 minutes to safely evacuate), the margin of safety will be characterized here by temporal aspects and tacitly applied to the physical margin of safety.

Since escaping (or mitigating) the harmful effects of fire is, effectively, a race, time is the metric of choice in the assessment of fire safety system designs based on computer model predictions. When an authority having jurisdiction is faced with the predicted time of untenability, a decision needs to be made regarding whether sufficient time is available to ensure the safety of building occupants. The authority having jurisdiction, in assessing the margin of safety, needs to determine whether there is sufficient time to get everyone out safely. If the authority having jurisdiction feels that the predicted egress time is too close to the time of untenability, the authority having jurisdiction can impose an additional time that the designer needs to incorporate into the system design. In this way, the authority having jurisdiction can impose a greater margin of safety than that originally proposed by the designer.

Copyright National Fire Protection Association
Provided by IHS under license with NFPA
No reproduction or networking permitted without license from IHS
Not for Resale

Annex M Sample Ordinance Adopting NFPA 914

This annex is not a part of the requirements of this NFPA document but is included for informational purposes only.

M.1 The following sample ordinance is provided to assist a jurisdiction in the adoption of this [*code, standard*] and is not part of this [*code, standard*].

ORDINANCE NO._____

An ordinance of the *[jurisdiction]* adopting the *[year]* edition of NFPA *[document number]*, *[complete document title],* and documents listed in Chapter 2 of that [*code, standard*]; prescribing regulations governing conditions hazardous to life and property from fire or explosion; providing for the issuance of permits and collection of fees; repealing Ordinance No. _____ of the *[jurisdiction]* and all other ordinances and parts of ordinances in conflict therewith; providing a penalty; providing a severability clause; and providing for publication; and providing an effective date.

BE IT ORDAINED BY THE *[governing body]* OF THE *[jurisdiction]*:

SECTION 1 That the *[complete document title]* and documents adopted by Chapter 2, three (3) copies of which are on file and are open to inspection by the public in the office of the *[jurisdiction's keeper of records]* of the *[jurisdiction]*, are hereby adopted and incorporated into this ordinance as fully as if set out at length herein, and from the date on which this ordinance shall take effect, the provisions thereof shall be controlling within the limits of the *[jurisdiction]*. The same are hereby adopted as the [*code, standard*] of the *[jurisdiction]* for the purpose of prescribing regulations governing conditions hazardous to life and property from fire or explosion and providing for issuance of permits and collection of fees.

SECTION 2 Any person who shall violate any provision of this code or standard hereby adopted or fail to comply therewith; or who shall violate or fail to comply with any order made thereunder; or who shall build in violation of any detailed statement of specifications or plans submitted and approved thereunder; or fail to operate in accordance with any certificate or permit issued thereunder; and from which no appeal has been taken; or who shall fail to comply with such an order as affirmed or modified by a court of competent jurisdiction, within the time fixed herein, shall severally for each and every such violation and noncompliance, respectively, be guilty of a misdemeanor, punishable by a fine of not less than $ _____ nor more than $_____ or by imprisonment for not less than _____ days nor more than _____ days or by both such fine and imprisonment. The imposition of one penalty for any violation shall not excuse the violation or permit it to continue; and all such persons shall be required to correct or remedy such violations or defects within a reasonable time; and when not otherwise specified the application of the above penalty shall not be held to prevent the enforced removal of prohibited conditions. Each day that prohibited conditions are maintained shall constitute a separate offense.

SECTION 3 Additions, insertions, and changes —that the *[year]* edition of NFPA *[document number]*, *[complete document title]* is amended and changed in the following respects:

List Amendments

SECTION 4 That ordinance No. _____ of *[jurisdiction]* entitled *[fill in the title of the ordinance or ordinances in effect at the present time]* and all other ordinances or parts of ordinances in conflict herewith are hereby repealed.

SECTION 5 That if any section, subsection, sentence, clause, or phrase of this ordinance is, for any reason, held to be invalid or unconstitutional, such decision shall not affect the validity or constitutionality of the remaining portions of this ordinance. The *[governing body]* hereby declares that it would have passed this ordinance, and each section, subsection, clause, or phrase hereof, irrespective of the fact that any one or more sections, subsections, sentences, clauses, and phrases be declared unconstitutional.

SECTION 6 That the *[jurisdiction's keeper of records]* is hereby ordered and directed to cause this ordinance to be published.

[NOTE: An additional provision may be required to direct the number of times the ordinance is to be published and to specify that it is to be in a newspaper in general circulation. Posting may also be required.]

SECTION 7 That this ordinance and the rules, regulations, provisions, requirements, orders, and matters established and adopted hereby shall take effect and be in full force and effect *[time period]* from and after the date of its final passage and adoption.

--`,,```,,,,````-`-`,,`,,`,`,,`---
Copyright National Fire Protection Association
Provided by IHS under license with NFPA
No reproduction or networking permitted without license from IHS
Not for Resale

Annex N Secretary of the Interior's Standards

This annex is not a part of the requirements of this NFPA document but is included for informational purposes only.

N.1 General. In the United States, the Interior Secretary provides guidelines for rehabilitation and operation of historic sites. The following information is provided as an example of national criteria:

(1) Every reasonable effort shall be made to provide a compatible use for a property that requires minimal alteration of the building, structure, or site and its environment, or to use a property for its originally intended purpose.

(2) The distinguishing original qualities or character of a building, structure, or site and its environment shall not be destroyed. The removal or alteration of any historic material or distinctive architectural feature should be avoided when possible.

(3) All buildings, structures, and sites shall be recognized as products of their own time. Alterations that have no historical basis and that seek to create an earlier appearance shall be discouraged.

(4) Changes that could have taken place in the course of time are evidence of the history and development of a building, structure, or site and its environment. These changes could have acquired significance in their own right, and this significance shall be recognized and respected.

(5) Distinctive stylistic features or examples of skilled craftsmanship that characterize a building, structure, or site shall be treated with sensitivity.

(6) Deteriorated architectural features shall be repaired rather than replaced wherever possible. In the event replacement is necessary, the new material should match the material being replaced in composition, design, color, texture, and other visual qualities. Repair or replacement of missing architectural features should be based on accurate duplications of features, substantiated by historic, physical, or pictorial evidence rather than on conjectural designs or the availability of different architectural elements from other buildings or structures.

(7) The surface cleaning of structures shall be undertaken with the gentlest means possible. Sandblasting and other cleaning methods that will damage the historic building materials shall not be undertaken.

(8) Every reasonable effort shall be made to protect and preserve archaeological resources affected by or adjacent to any project.

(9) Contemporary design for alterations and additions to existing properties shall not be discouraged when such alterations and additions do not destroy significant historical, architectural, or cultural material, and such design is compatible with the size, scale, color, material, and character of the property, neighborhood, or environment.

(10) Wherever possible, new additions or alterations to structures shall be done in such a manner that if such additions or alterations were to be removed in the future, the essential form and integrity of the structure would be unimpaired.

Copyright National Fire Protection Association
Provided by IHS under license with NFPA
No reproduction or networking permitted without license from IHS
Not for Resale

Annex O Guideline on Fire Ratings of Archaic Materials and Assemblies

This annex is not a part of the requirements of this NFPA document but is included for informational purposes only.

Prepared by the National Institute of Building Sciences, Washington, DC, for the U.S. Department of Housing and Urban Development Office of Policy Development and Research under Cooperative Agreement H-5033. The contents of this publication do not necessarily reflect the views and policies of the Department of Housing and Urban Development or the U.S. Government.

Acknowledgments

The National Institute of Building Sciences produced the first edition of the *Guideline on Fire Ratings of Archaic Materials and Assemblies* in 1980, with Brady Williamson the principal author and Joseph Zicherman, Fred Fisher, and Harry Hasegawa coauthors. Reviewers were Herman Spaeth, Ann Watson, Vytenis Babrauskas, Norman Kornsand, Harold Nelson, Richard Bletzacker, and Russell Parks. Project managers were Robert Kapsch of HUD and William Brenner of NIBS. Technical managers were David Hattis and Howard Markman of Building Technology, Inc.

NIBS produced this updated edition in 1999, with Joseph Zicherman the principal consultant. Reviewers were Jack Watts, Caroline Alderson, Paul Armstrong, and Harold Olin. Project managers were Nelson Carbonell of HUD and William Brenner of NIBS. The technical manager was David Hattis of Building Technology, Inc., and the graphic designer was Marcia Axtmann Smith. NFPA provided an electronic version of the tables and illustrations in O.4.5. The material in NFPA 914, Appendix P, is used with the permission of English Heritage.

Table of Contents

Introduction
O.1 Fire-Related Performance of Archaic Materials and Assemblies
O.1.1 Fire Performance Measures
O.1.1.1 Flame Spread
O.1.1.2 Smoke Density
O.1.2 Combustible Construction Types
O.2 Building Evaluation
O.2.1 Introduction
O.2.2 Preliminary Evaluation
O.2.3 Fire Resistance of Existing Building Elements
O.2.4 Effects of Openings and Penetrations in Fire Resistant Assemblies on Fire Endurance and Fire Resistance Ratings
O.3 Final Evaluation and Design Solutions
O.3.1 Introduction
O.3.2 The Experimental Approach
O.3.3 The Theoretical Approach
O.3.4 "Thickness Design" Strategy
O.3.5 Evaluation of Doors
O.4 Summary
O.4.1 Introduction
O.4.2 Application for Listed Building Elements
O.4.3 Application for Unlisted Building Elements
O.4.4 General Application
O.4.5 Fire Rating Tables
O.5 Bibliography

Introduction

The purpose of the *Guideline on Fire Ratings of Archaic Materials and Assemblies* is to assist architects, engineers, preservationists, and code officials in evaluating the fire safety of older buildings by providing documentation on the fire-related performance of a wide variety of archaic building materials and assemblies, and, for those cases where documentation cannot be found, by providing ways to evaluate general classes of archaic materials and assemblies. The term *archaic* encompasses materials and assemblies typical of an earlier time and no longer in common use. *Fire-related performance* includes fire resistance, flame spread, smoke production, and combustibility.[1]

The guideline assumes that the building elements being evaluated — as well as their fastening, joining, and incorporation into the building structure — are mechanically sound. The user must make a determination that the original materials and the manner in which they were installed are in good condition and have not been weakened by age or deterioration. Such an assessment may be difficult because process and quality control were not good in many industries and variations among locally available raw materials and manufacturing techniques often resulted in products or installations that varied considerably in strength and durability. The properties of iron and steel, for example, exhibited great variation depending on the mill and the process used.

With this caveat, there is nothing inherently inferior about archaic materials or construction techniques. The pressures that promote changes in construction are most often economic and technological — matters not necessarily related to safety. The high cost of labor made wood lath and plaster uneconomical. The high cost of land and the congestion of cities provided the impetus for high-rise construction, and improved technology made it possible. The difficulty with archaic materials and assemblies is not a question of suitability but familiarity, and the question of their continued use is usually not based on their fire performance but on the lack of sufficient documentation related to that performance. Lacking documentation, the building official may require a full-scale fire test or the removal of the construction in question. Both alternatives are time consuming, wasteful, and destructive of the historic fabric of the building.

Modern building codes state the fire performance of key building elements — such as walls, floor/ceiling assemblies, doors, and shaft enclosure — in performance terms, as *hours of fire resistance*. It does not matter whether these elements were built in 1850 or 2000, only that they provide the degree of fire resistance required by local building regulations. This guideline is intended to provide a basis for the continued acceptance of archaic materials and assemblies that otherwise meet modern fire performance requirements.

O.1 Fire-Related Performance of Archaic Materials and Assemblies.

O.1.1 Fire Performance Measures. This guideline does not specify the level of fire performance required for building components. These are controlled by the building's occupancy and use as set forth in the local building regulations, which require specific building components or assemblies such as walls, floor/ceilings, and doors to be characterized in terms of "fire resistance" and require exposed materials to be characterized in terms of "flame spread."

Fire resistance and flame spread are fundamentally different parameters, affecting life and property safety in different

Copyright National Fire Protection Association
Provided by IHS under license with NFPA
No reproduction or networking permitted without license from IHS
Not for Resale

ways. Fire resistance relates to *structural fire performance* and becomes important only after a fire has become established and threatens a building's structural integrity. Flame spread relates to the *potential for fire growth* within a structure. Properties related to flame spread are most important in the early stages of a fire and usually measure the performance of exposed or "finish" materials within building spaces.

For archaic materials, flame spread properties, unlike fire resistance properties, generally can be deduced through the examination of materials, through testing according to ASTM E 84, or other methods. Published data for the flame spread properties of specific assemblies is limited, however, except for recent products listed in handbooks.

The mitigation of treatment of potential problems related to flame spread (for example, the removal of suspect or defective finish materials, or their treatment with an appropriate coating or low flame spread finish) will generally cost less than the treatment of fire resistance deficiencies since the latter may affect large numbers of door assemblies or entire building structural systems.

The fire resistance of a given building element is established by subjecting a sample of the assembly to a "standard" fire test to determine its fire resistance. This is essentially its resistance to destruction (i.e., specified loss of function) throughout a prescribed time period in a fully developed fire. The test follows a "standard" time-temperature curve derived from a methodology that has changed little since the 1920s. The fire resistance test results tabulated in Section I.4.5 have been reviewed and conservatively adjusted to reflect criteria found in the currently accepted versions of consensus-based standard fire resistance test methods.

Flame spread and smoke production, not always tested for in earlier years, are measured according to the ASTM E 84 test method. Archaic materials evaluated for these properties generally can be assumed to fall within a well-known range of values because the principal combustible component of these materials is cellulose. Smoke production, expressed as smoke density, continues to be important today. Early flame spread tests, developed in the 1940s, included a test for smoke density.

Plastics, one of the most important classes of contemporary materials, were not found in the review of archaic materials. If plastics are to be used in a rehabilitated building, they should be evaluated by contemporary standards. Information and documentation of their fire-related properties and performance is widely available.

Flame spread and smoke density are discussed below. Test results for eight common species of lumber, published in an Underwriter's Laboratories' report, are reproduced in Table O.1.1. Similar data can also be found in the USDA Forest Service, *Wood Handbook (Agriculture Handbook 72)*, available online at www.fs.fed.us.

O.1.1.1 Flame Spread. For regulatory purposes, the flame spread of interior finishes is most often measured using the ASTM E 84 "tunnel test." This test measures how far and how fast flames spread across the surface of the test sample.[2] The resulting flame spread rating (FSR) is expressed as a number on a continuous scale where cement-asbestos board is 0 and red oak is 100 (materials with a flame spread greater than red oak have a FSR greater than 100). The scale is divided into distinct groups or classes. The most commonly used flame spread classifications are as follows:

(1) Class I or A, with a 0–25 FSR
(2) Class II or B, with a 26–75 FSR
(3) Class III or C, with a 76–200 FSR

Table O.1.1 Tunnel Test Results for Eight Species of Lumber

Species of Lumber	Flame Spread	Smoke Density
Western White Pine	75	50
Northern White Pine	120–215	60–65
Ponderosa Pine	80–215	100–110
Yellow Pine	180–190	275–305
Red Gum	140–155	40–60
Yellow Birch	105–110	45–65
Douglas Fir	65–100	10–100
Western Hemlock	60–75	40–120

These classifications are typically used in modern building codes to restrict the rate of early fire spread on material surfaces. Since they differ, not all classes of materials can be used in all places throughout a building. For example, the flame spread of interior finishes in vertical exit ways or corridors leading to exits is more strictly regulated than are finishes in private dwelling units.

In general, inorganic archaic materials such as brick or tile can be expected to be in Class I. Materials of whole wood are mostly Class II or the lower end of Class III, although the thickness of specific products is important. For example, thin plywood or wood-grained particle board panels reconstituted from whole wood and based on a given wood species will generally have higher flame spread properties than those based on the original wood species tested as a thicker specimen. This effect needs to be considered in making design decisions.

Whole wood is defined as wood used in the same form as sawn from the tree. This is in contrast to contemporary reconstituted wood products such as plywood, fiberboard, hardboard, particle board, and oriented-strand board (OSB). If a combustible archaic material such as a non-fire retardant ceiling tile is not fabricated from whole wood, its flame spread classification could be well over 200 and thus would be particularly unsuited for use in exits and other critical locations in a building. Some plywoods and various wood fiberboards have flame spreads over 200. Although they can be treated with fire retardants to reduce their flame spread, it would be advisable to assume that all such products have a flame spread over 200 unless there is information to the contrary.

O.1.1.2 Smoke Density. The measurement of the density of smoke produced is specifically part of the ASTM E 84 tunnel test procedure. For the eight species of lumber shown in Table O.1.1, the highest levels are 275–305 for yellow pine, but most of the others are less smoky than red oak, which has an index of 100. With the exception of values observed for some wood composites, the smoke values listed in Table O.1.1 are well below the general limitation of 450 adopted by most building codes.

O.1.2 Combustible Construction Types. One of the earliest forms of timber construction used exterior load-bearing masonry walls with masonry columns or timber posts supporting timber beams and floors in the interior of the building. This form of construction, often called "mill" or "heavy timber" construction, displays fire resistance in excess of one hour. The exterior masonry walls will generally contain the fire within the building.

With the development of dimensional lumber, there was a switch from heavy timber to "balloon frame" construction. The

Copyright National Fire Protection Association
Provided by IHS under license with NFPA
No reproduction or networking permitted without license from IHS
Not for Resale

balloon frame uses load-bearing exterior wood-frame walls with long studs that often extend from foundation to roof. When long studs became scarce, another form of construction, the "platform" frame, replaced the balloon frame. This occurred from the 1850s to the 1920s in different areas of the country, depending on the supply of long studs. If information on the initial construction date of a wood-framed building is known, along with information about local practices followed at the time of construction, the likelihood that a building includes balloon framing may be assessed and addressed.

The difference between the two systems is significant because platform framing is automatically fire-blocked at every floor, while balloon framing commonly has concealed spaces that extend unblocked from basement to attic. The architect, engineer, and code official must be alert to the presence of such construction details because of the ease with which fire can spread in concealed building spaces. Requirements for fire blocking and fire stopping and allowances for combustible and noncombustible concealed spaces are set forth in local building regulations.

O.2 Building Evaluation.

O.2.1 Introduction. A given rehabilitation project will most likely go through several stages. The preliminary evaluation process involves surveying the prospective building, where the flame spread performance and fire resistance performance of existing building materials and construction systems are identified and compared to local code requirements. Potential problems such as performance at levels below local requirements are noted for closer study. The final evaluation phase involves developing solutions to upgrade, where needed, materials and assemblies to the required flame spread and fire resistance performance; preparing working drawings and specifications; and securing necessary code approvals.

O.2.2 Preliminary Evaluation. The preliminary evaluation should begin with a building survey to note existing materials, the general arrangement of the structure, and the details of construction. The designer needs to know "what is there" before a decision can be reached about what to keep, what to remove, and what to upgrade during the rehabilitation process.

The evaluation must take into account the former and projected uses of the building and modifications to its mechanical, plumbing, and electrical systems. Seismic events, fires, and other accidents as well as nonconforming alterations must be researched. Finally, archaic materials and assemblies must be evaluated against applicable code requirements.

Two possible sources of information helpful in the preliminary evaluation are the original building plans and the building code in effect at the time of original construction. Plans may be on file with the local building department or in the offices of the original designers or their successors. If plans are available, the investigator should verify that the building was constructed according to the plans and whether or not the plans have been modified to include later alterations. Earlier editions of the local building code may be on file in the building department. The code in effect at the time of construction will contain fire performance criteria under which the original building was constructed. While this is no guarantee that the required performance was actually provided, it does give the investigator some guidance as to the level of performance that may be expected. Current code administration procedures and enforcement practices will define whether the requirements of the code in effect at the time of construction complies with currently required levels of performance.

Table O.2.2(a) illustrates one method for organizing preliminary field notes, with space provided for noting the materials, dimensions, and condition of the principal building elements. Each floor of the structure should be visited. In practice, there will often be identical materials and construction on every floor, but any exceptions may be of vital importance. A schematic diagram should be prepared for each floor showing the layout of exits and hallways and indicating where each element described in the field notes fits into the structure as a whole. The location of stairways and elevators should be clearly marked on the drawings. All exterior means of escape should be identified. The exact arrangement of interior walls is of secondary importance from a fire safety point of view and need not be shown on the drawings unless they are required by code.

The following notes explain the entries in Table O.2.2(a).

Note 1. Exterior Bearing Walls. Many old buildings utilize exterior walls to support the floor/ceiling assemblies at the building perimeter. There may be columns or interior bearing walls within the structure, but the exterior walls and their fire resistance are an important factor in assessing the building's fire safety. Note how the floor/ceiling assemblies are supported at their interface with the exterior walls of the building. If columns are incorporated in the exterior walls, the walls may be considered nonbearing.

Note 2. Exterior Nonbearing Walls. The fire resistance of exterior walls is an important factor for two reasons. These walls (both bearing and nonbearing) are depended upon to contain a fire within the building of origin, or to keep a fire originating outside the building from igniting that building either on the exterior or the interior. It is therefore important to indicate on the drawings where any openings are located as well as the materials and construction of all doors or shutters. The drawings should indicate the presence of wired glass and its thickness and framing, and should identify the materials used for windows and door frames. The protection of openings adjacent to exterior means of escape (e.g., exterior stairs, fire escapes) is particularly important. The ground floor drawing should locate the building on the property and indicate the precise distances to adjacent buildings.

Note 3. Interior Bearing Walls. It may be difficult to tell whether or not an interior wall is load bearing, but the field investigator should attempt to make this determination. At a later stage of the rehabilitation process, this question will need to be answered exactly. Therefore, the field notes should be as accurate as possible.

Note 4. Interior Nonbearing Walls (Partitions). A partition is a "wall that extends from floor to ceiling and subdivides space within any story of a building." Besides providing for general separation of spaces within buildings, partitions also may have fire safety functions that entail specific fire resistance requirements. Examples include party walls, occupancy separations, smoke barriers, and corridor and exit enclosures. These must be clearly identified and may include fire-rated walls that provide the same functions. When such walls enclose a means of egress, the required flame spread properties of finish materials also must be accounted for.

Table O.2.2(b) includes categories for several types of walls. Since under some circumstances a building may have only one type of wall construction and in others it may have several, the occurrence and function of walls must be carefully noted and evaluated.

Copyright National Fire Protection Association
Provided by IHS under license with NFPA
No reproduction or networking permitted without license from IHS
Not for Resale

Table O.2.2(a) Preliminary Evaluation Field Notes

Building Element		Materials	Thickness	Condition	Notes
Exterior bearing walls					
Interior bearing walls					
Exterior nonbearing walls					
Interior nonbearing walls or partitions	A				
	B				
Structural frame: Columns					
Beams					
Other					
Floor/ceiling structural system: Spanning					
Roofs					
Doors (including frame and hardware): Enclosed vertical exitway					
Enclosed horizontal exitway					
Other					

The field investigator should be alert for differences in function as well as in materials and construction details. In multiunit buildings, for example, wall details within apartments generally are not as important as the functions of separation walls or walls along defined egress paths and stairwells.

The preliminary field investigation should attempt to determine the thickness of all walls. A term introduced below called "thickness design" will depend on an accurate ($\pm 1/4$ in.) determination of thickness. Even though this initial field survey is called "preliminary," the data generated should be as accurate and complete as possible.

The field investigator should note the exact location from which his or her observations are recorded. For instance, if a hole is found through a stairwell wall that allows a cataloguing of the construction details, the field investigation notes should reflect the location of the "find." At the preliminary stage it is not necessary to core walls, since the interior details of construction usually can be determined at some location.

Note 5. Structural Frame. There may or may not be a complete skeletal frame, but usually there are columns, beams, trusses, or similar elements. The dimensions and spacing of the structural elements should be measured and indicated on the drawings. For instance, if 10-in.-square columns are located on a 30-ft-square grid throughout the building, this should be noted. The structural material and its protective covering, if any, should be identified wherever possible. The thickness of the cover materials should be determined to an accuracy of $\pm 1/4$ in. In a case in Chicago, local code officials found that in many older buildings slated for renovation, original wood timber columns had been replaced by nonfire-rated metal columns, degrading the structure's potential fire endurance. The performance of the metal columns was readily upgraded, however, by providing fire resistive cladding to achieve the required hourly fire ratings.

Note 6. Floor/Ceiling Structural Systems. A sketch of the cross section of the structural system should be made. If there is no location where accidental damage has opened the floor/ceiling construction to visual inspection, it is necessary to make such an opening. An evaluation of the fire resistance of a floor/ceiling assembly requires detailed knowledge of the materials and their arrangement. Special attention should be paid to the cover on structural steel elements and the nature and condition of suspended ceilings and similar membranes.

Copyright National Fire Protection Association
Provided by IHS under license with NFPA
No reproduction or networking permitted without license from IHS
Not for Resale

Table O.2.2(b) Preliminary Evaluation Worksheet

Building Element		Required Fire Resistance	Required Flame Spread	Estimated Fire Resistance	Estimated Flame Spread	Method of Upgrading	Estimated Upgraded Protection	Notes
Exterior bearing walls								
Interior bearing walls								
Exterior nonbearing walls								
Interior nonbearing walls or partitions	A							
	B							
Structural frame: Columns								
Beams								
Other								
Floor/ceiling structural system: Spanning								
Roofs								
Doors (including frame and hardware): Enclosed vertical exitway								
Enclosed horizontal exitway								
Other								

Note 7. Roofs. If it is apparent that the roof is sound for ordinary use and can be retained in the rehabilitated building, it then becomes necessary to evaluate its fire performance. The field investigator must measure the thickness and identify the types of materials that have been used. Be aware that there may be several layers of roofing materials present and that the number may be limited by the local building code.

Note 8. Doors. Doors to corridors and exits represent some of the most important fire resistive elements within a building. The uses of the spaces separated by the doors largely control the level of fire performance necessary. Walls and doors enclosing stairs or elevator shafts normally require a higher level of performance than between a bedroom and bath. The various uses are differentiated in Table O.2.2(a).

Careful measurements of the thickness of door panels must be made, and the type of core material within each door must be determined. Note whether doors have self-closing devices, and check the general operation of the doors. Latches should engage, and doors should fit tightly in the frame. Hinges should be in good condition. Identify any door glazing and note its framing material.

Note 9. Materials. The field investigator should be able to identify commonly found building materials in a given geographic area. In situations where an unfamiliar material is found, a sample should be obtained.

Note 10. Thickness. The thickness of all materials should be measured accurately since under most circumstances anticipated levels of fire resistance are very sensitive to the material thickness.

Note 11. Condition. The method of attaching the various layers and facings to one another or to the supporting structural element should be noted under the appropriate building element. The "secureness" of the attachment and the general condition of the layers and facings also should be noted.

Copyright National Fire Protection Association
Provided by IHS under license with NFPA
No reproduction or networking permitted without license from IHS
Not for Resale

Note 12. Notes. The "Notes" column can be used for many purposes, including providing specific references to other field notes or drawings, such as those describing the occupancy of the building or space and the functions of its components.

After the building survey is completed, the data collected must be analyzed. A suggested worksheet for organizing this information is shown in Table O.2.2(b).

Requirements for fire resistance and the flame spread properties of each building element are normally established by the local building code. The fire performance of the existing materials and assemblies should be estimated using one of the techniques described below. If the fire performance of the existing building element(s) is equal to or greater than that required, the materials and assemblies may be considered acceptable as they are. If the fire performance is less than required, corrective measures must be taken.

The most common methods of upgrading the level of protection are either the removal and replacement of the existing building elements or repairing and upgrading them. Other fire protection measures, such as automatic sprinklers or detection and alarm systems, also can be considered, but they are beyond the scope of this *Guideline*. If the upgraded protection is still less than that required or deemed to be acceptable, additional corrective measures must be taken. This process must continue until a level of performance acceptable to the building authority and consistent with good practice is achieved.

O.2.3 Fire Resistance of Existing Building Elements. The ability of the existing building elements to sustain a standard fire test exposure for a prescribed period, generally referred to as its fire endurance or fire resistance, can be estimated from the tables and histograms contained in O.4.5, which is organized by type of building element (i.e., walls, columns, floor/ceiling assemblies, beams, and doors). Within each building element, the tables are organized by type of construction (e.g., masonry, metal, or wood frame) and then further divided by minimum dimensions or the thickness of the building element.

A histogram precedes every table that has 10 or more entries. Its X-axis measures fire resistance in hours, and its Y-axis shows the number of entries in that table having a given level of fire resistance. The histograms also contain the location of each entry within that table for easy cross referencing.

Because they are keyed to the tables, the histograms usually can be used to speed the preliminary investigation. For example, Table O.4.5.13, Wood Frame Walls 4 in. (100 mm) to Less than 6 in. (150 mm) Thick, contains 96 entries. Rather than study each table entry, the designer can examine the histogram, which shows that every wall assembly listed in that table has a fire resistance of less than 2 hours. If the building code required the wall to have 2-hour fire resistance, the designer, with a minimum of effort, is made aware of a problem that requires closer study.

Suppose the code had only required a wall of 1-hour fire resistance. The histogram shows far fewer complying elements (19) than noncomplying ones (77). If the existing assembly is not one of the 19 complying entries, there is a strong possibility it is deficient. The histograms also can be used in the converse situation: If the existing assembly is not one of the smaller number of entries with a lower-than-required fire resistance, there is a strong possibility the existing assembly will be acceptable.

At some point, the existing building component or assembly must be located within the tables. If not, its fire resistance must be determined through one of the other techniques presented in the guideline. Locating the building component in the tables in O.4.5 not only documents the accuracy of its fire resistance rating but also provides a source of that documentation for the building official.

O.2.4 Effects of Openings and Penetrations in Fire Resistant Assemblies on Fire Endurance and Fire Resistance Ratings. There are often features of wall or floor/ceiling components that were not included in the original building design or that were not included in fire tests, including doors and windows, glazed transoms and other types of glazing in corridors, shaftways, through-penetrations, and membrane penetrations for utilities such as plumbing, electrical, and communications services.

Building codes generally use the terms *openings* and *opening protection* to refer to doors and window openings. Conversely, the term *penetrations* typically refers to passages for mechanical or electrical services for traversing assemblies found in a building. Each requires a different fire resistance test method to be evaluated, and each generates different information.

The most common examples of penetrations are pipes and utility wires passed through holes poked through an assembly. Their performance will have been qualified for use in new buildings by testing according to the ASTM E 814, *Standard Test Method for Fire Tests of Through-Penetration Fire Stops*, and its derivative standards promulgated by ANSI and NFPA. During the life of the building, however, many penetrations may have been added, and by the time a building is ready for rehabilitation it is not sufficient just to consider the fire resistance of the assembly as originally constructed.

It is also necessary to consider all classes of penetrations and openings and their relative impact upon fire performance. For instance, the fire resistance of a corridor wall may be less important in a given building application than the effect of plain glass being present in doors or transoms since the latter will lead to very early failures. Generally speaking, a building's doors and associated installation features (hardware, frames, transoms, and glazing) represent the most important single class of openings having a crucial fire safety function that needs to be addressed.

A fully developed fire generates substantial quantities of heat and gaseous fuels capable of penetrating unprotected openings or non-fire-stopped holes that might be present in the walls or floors and ceilings of a fire-affected compartment. The presence of such unprotected openings and penetrations can lead to a severe degradation of the fire resistance of those building elements and to a greater potential for fire spread. This is particularly true for penetrations located high in a compartment where the positive pressure of the fire can force unburned gases through such a penetration.

Unprotected penetrations in a floor/ceiling assembly will generally completely negate the barrier qualities of the assembly and will lead to rapid spread of fire to the space above. It will not be a problem, however, if the penetrations are filled with noncombustible or other fire-rated materials adequately attached to the structure. The threat to the upper two-thirds of walls exposed to fire will be similar to that experienced by the floor/ceiling assemblies undergoing a fire exposure from below. This is because a positive pressure can be reasonably expected to be present in the top of any room exposed to a fully developed fire, and such an exposure can be expected to push hot and burning gases through any penetrations present unless they are completely sealed. In the same context, the performance of all components related to HVAC systems present in buildings (as well as mechanical or electrical/communication systems whose components are associated with fire resistive assemblies or components) must be carefully considered. Materials available to mitigate these

Copyright National Fire Protection Association
Provided by IHS under license with NFPA
No reproduction or networking permitted without license from IHS
Not for Resale

potential problems include listed intumescent and other insulating firestopping materials, systems, and assemblies as found in listing handbooks from approved third party laboratories.

Building codes require doors installed in fire-resistive walls to resist the passage of fire for a specified period of time. If the door to a room with a fully developed fire is not closed, a large plume of fire will typically escape through the doorway, preventing anyone from using the space outside the door while allowing the fire to spread. This is why the presence of effective door closers and an absence of obstacles to the timely closing of fire doors in an emergency are so important.

Glass in doors and transoms can be expected to shatter rapidly unless constructed of listed or approved wired glass in a steel frame or other contemporary fire-rated glazing products now available. As with other building elements, non-fire-stopped penetrations or nonrated openings including those created by windows and transoms must be upgraded or otherwise protected.

As part of ongoing rehabilitation efforts in older buildings, significant research directed at upgrading the fire resistance of existing door, transom, and sidelight assemblies has taken place in the United States and Great Britain. An English Heritage Technical Guidance Note on this subject ["Timber Paneled Doors and Fire" (May 1997)] treats this problem comprehensively and includes information for upgrading wood panel doors. Because the fire test protocols utilized in Britain for doors are based on British Standard 476, which provides an equivalent fire exposure to similar U.S. test methods, the results presented in the English Heritage Technical Guidance Note can be used directly in American applications.

In the United States, efforts to upgrade door performance have been underway under the auspices of the General Services Administration as part of an effort to preserve the historic components of its older structures. This has resulted in the successful fire testing of retrofitted door assemblies using contemporary glazing products and associated materials.

Table O.4.5.58 in O.4.5 contains 42 entries describing the fire endurance of doors mounted in sound, tight-fitting frames. NFPA 914, Annex P, contains 28 treatments for upgrading the fire resistance of wood panel doors from the English Heritage Technical Guidance Note. Subsection O.3.5 outlines one procedure for the evaluation and possible upgrading of existing doors.

O.3 Final Evaluation and Design Solution.

O.3.1 Introduction. The final building evaluation begins after the rehabilitation project has reached the final design stage and the choice has been made to keep certain archaic materials and assemblies. By this point, the specific fire resistance and flame spread requirements will have been determined for the project. This may involve having the local building and fire officials review the field drawings and evaluations recorded in the worksheets in Table O.2.2(a) and Table O.2.2(b).

If the materials and assemblies in question are listed in O.4.5 or NFPA 914, Annex J, their fire resistance can be determined immediately. If not, two other approaches can be used, one experimental, the other theoretical.

O.3.2 The Experimental Approach. This approach involves conducting an appropriate fire test(s) to determine directly the material or assembly's fire-related properties. Such testing must utilize ASTM E 84, *Test Method for Surface Burning Characteristics of Building Materials* (flame spread), and ASTM E 119, *Test Methods for Fire Tests of Building Construction and Materials* (fire resistance). Both test methods require significant amounts of sample for testing, so other approaches, as outlined later, should also be investigated. There are a number of laboratories in the United States that routinely conduct such fire tests; a current list can be obtained by contacting one of the model code organizations or the National Fire Protection Association.

A contract with a testing laboratory for a specific project should require the laboratory's observation (or that of an engineer acceptable to the building official) of the specimen's preparation and testing. A complete description of where and how the specimen was obtained from the building, the transportation of the specimen, and its preparation for testing should be noted in detail so that the building official can be satisfied that the fire test is representative of the actual use. Photographic or video documentation is especially helpful in this regard.

The test report should describe the fire test procedure and the response of the material or assembly. The laboratory usually submits a cover letter with the report to describe the provisions of the fire test that were satisfied by the material or assembly under investigation. The building official will generally require such a cover letter but will also read the report to confirm that the material or assembly meets code requirements. Local code officials should be kept informed of all details of the testing process.

The experimental approach can be costly and time consuming because specimens must be taken from the building and transported to the testing laboratory. For testing of flame spread of finish materials by ASTM E 84, testing will require a sample 2 ft wide and 25 ft long, which may be taken in three sections. For testing by ASTM E 119 of a load-bearing assembly that has continuous reinforcement, the test specimen must be removed from the building, transported, and tested in one piece.

In special cases, a "nonstandard" small-scale test may be used with the concurrence of the building official for fire endurance testing. Sample sizes need only be 10 ft^2 to 25 ft^2, while full-scale tests require test samples of either 100 ft^2 or 180 ft^2 in size. The small-scale test is best suited for testing non-load-bearing assemblies against thermal transmission only.

For alternates to flame spread testing according to ASTM E 84, consider the methods described in the next section.

O.3.3 The Theoretical Approach. Theoretical methods offer an alternative to the full-scale fire tests discussed above. For example, most codes allow alternate materials and methods to be used based on test data and engineering analyses in lieu of full-scale tests. These analyses may draw upon computer simulation and mathematical modeling, thermodynamics, heat-flow analysis, and materials science to predict the fire performance of a material or assembly.

Where properties other than fire endurance are concerned, the evaluation of materials for heat release through the use of cone calorimeter techniques *(see ASTM E 1354)* or through use of the intermediate scale calorimeter "ICAL" *(see ASTM E 1623)* may be appropriate. Such an evaluation can be included as one component of a fire hazard analysis conducted for review by the code official for a given project design. The evaluation of flame spread by the LIFT (linear ignition and flame travel) apparatus *(see ASTM E 1321)* or room fire testing of unusual or poorly characterized finish materials based on the techniques found in ASTM E 603, cited earlier, also may be of use.

One theoretical method is the "Ten Rules of Fire Endurance Rating," published by T. Z. Harmathy in the May 1965 edition of *Fire Technology*. Harmathy's Rules provide a foundation for extending the data in O.4.5.

Copyright National Fire Protection Association
Provided by IHS under license with NFPA
No reproduction or networking permitted without license from IHS
Not for Resale

O.3.3.1 Harmathy's Ten Rules of Fire Endurance Rating.

Rule 1: The "thermal" fire endurance[3] of a construction consisting of a number of parallel layers is greater than the sum of the "thermal" fire endurance that is characteristic of the individual layers when exposed separately to fire.

The minimum performance of an untested assembly can be estimated if the fire endurance of the individual components is known. Though the exact rating of the assembly cannot be stated, the endurance of the assembly is greater than the sum of the endurance of the components. This rule can be exemplified by the fact that the fire endurance of multiple sheets of gypsum wallboard, such as those of other fire-rated materials, will exceed the fire endurance of individual fire-rated slabs of the same total thickness.

When a building assembly or component is found to be deficient, the fire endurance can be upgraded by providing a protective membrane. This membrane could be a new layer of brick, plaster, or drywall. The fire endurance of this membrane is called the "finish rating." Table O.4.5.17 and Table O.4.5.18 contain the finish ratings for the most commonly employed materials *(see also the notes to Rule 2).*

The test criteria for the finish rating are the same as for the thermal fire endurance of the total assembly: average temperature increases of 250°F (121°C) above ambient or 325°F (163°C) above ambient at any one place with the membrane being exposed to the fire. The temperature is measured at the interface of the assembly and the protective membrane.

Rule 2: The fire endurance of a construction does not decrease with the addition of further layers.

Harmathy notes that this rule is a consequence of the previous rule. Its validity follows from the fact that the additional layers increase both the resistance to heat flow and the heat capacity of the construction. This, in turn, reduces the rate of temperature rise at the unexposed surface.

This rule is not just restricted to "thermal" performance but affects the other fire test criteria: direct flame passage, cotton waste ignition, and load-bearing performance. This means that certain restrictions must be imposed on the materials to be added and on the loading conditions. One restriction is that a new layer, if applied to the exposed surface, must not produce additional thermal stresses in the construction (i.e., its thermal expansion characteristics must be similar to those of the adjacent layer). Each new layer must also be capable of contributing enough additional strength to the assembly to sustain the added dead load. If this requirement is not fulfilled, the allowable live load must be reduced by an amount equal to the weight of the new layer. Because of these limitations, this rule should not be applied without careful consideration.

Particular care must be taken if the material added is a good thermal insulator. Properly located, the added insulation could improve the "thermal" performance of the assembly. Improperly located, the insulation could block necessary thermal transmission through the assembly, thereby subjecting the structural elements to greater temperatures for longer periods of time and could cause premature structural failure of the supporting members.

Under this rule, the addition of new components, such as EIFS systems, must be evaluated with care where they can affect fire performance.

Rule 3: The fire endurance of constructions containing continuous air gaps or cavities is greater than the fire endurance of similar constructions of the same weight, but containing no air gaps or cavities.

Voids in a construction provide additional resistance in the path of heat flow. Numerical heat flow analyses indicate that a 10 to 15 percent increase in fire endurance can be achieved by creating an air gap at the midplane of a brick wall. Since the gross volume is also increased by the presence of voids, the air gaps and cavities have a beneficial effect on stability as well. However, constructions containing combustible materials within an air gap may be regarded as exceptions to this rule because of the possible development of burning in the gap.

There are numerous examples of this rule in the tables. For instance, the following are examples:

(1) Table O.4.5.4, Item W-8-M-82: Cored concrete masonry, nominal 8-in. thick wall with one unit in wall thickness and with 62 percent minimum of solid material in each unit, load bearing [80 psi (5.5 bar)]. Fire endurance $2^1/_2$ hours.
(2) Table O.4.5.5, Item W-10-M-11: Cored concrete masonry, nominal 10-in. (0.25-m) thick wall with two units in wall thickness and a 2-in. (50-mm) air space, load bearing [80 psi (5.5 bar)]. The units are essentially the same as item W-8-M-82. Fire endurance $3^1/_2$ hours.

These walls show 1-hour greater fire endurance by the addition of the 2-in. (50-mm) air space.

Rule 4: The farther an air gap or cavity is located from the exposed surface, the more beneficial is its effect on the fire endurance.

Radiation dominates the heat transfer across an air gap or cavity, and it is markedly higher where the temperature is higher. The air gap or cavity is thus a poor insulator if it is located in a region that attains high temperatures during fire exposure.

Some of the clay tile designs take advantage of these factors. The double cell design, for instance, ensures that there is a cavity near the unexposed face. Some floor/ceiling assemblies have air gaps or cavities near the top surface, and these enhance their thermal performance.

Rule 5: The fire endurance of a construction cannot be increased by increasing the thickness of a completely enclosed air layer.

Harmathy notes that there is evidence that if the thickness of the air layer is larger than about $^1/_2$ in. (12.5 mm), the heat transfer through the air layer depends only on the temperature of the bounding surfaces and is practically independent of the distance between them. This rule is not applicable if the air layer is not completely enclosed (i.e., if there is a possibility of fresh air entering the gap at an appreciable rate).

Rule 6: Layers of materials of low thermal conductivity are better utilized on that side of the construction on which fire is more likely to happen.

As in Rule 4, the reason lies in the heat transfer process, though the conductivity of the solid is much less dependent on the ambient temperature of the materials. The low thermal conductor creates a substantial temperature differential to be established across its thickness under transient heat flow conditions. This rule might not be applicable to materials undergoing physio-chemical changes accompanied by significant heat absorption or heat evolution.

Rule 7: The fire endurance of asymmetrical construction — constructions that are not identical on both sides of their central line — depends on the direction of heat flow.

This rule is a consequence of Rules 4 and 6 as well as other factors. This rule is useful in determining the relative protection of corridors and stairwells from the surrounding spaces. In addition, there are often situations where a fire is more likely, or potentially more severe, from one side or the other.

Copyright National Fire Protection Association
Provided by IHS under license with NFPA
No reproduction or networking permitted without license from IHS
Not for Resale

Rule 8: The presence of moisture, if it does not result in explosive spalling, increases the fire endurance.

The flow of heat into an assembly is greatly hindered by the release and evaporation of the moisture found within cementitious materials such as gypsum, portland cement, or magnesium oxychloride. Harmathy has shown that the gain in fire endurance can be as high as 8 percent for each percent (by volume) of moisture in the construction. It is the moisture chemically bound within the construction material at the time of manufacture or processing that leads to increased fire endurance. There is no direct relationship between the relative humidity of the air in the pores of the material and the increase in fire endurance.

Under certain conditions there could be explosive spalling of low permeability cementitious materials such as dense concrete. In general, one can assume that extremely old concrete has developed enough minor cracking that this factor should not be significant.

Rule 9: Load-supporting elements, such as beams, girders, and joists, yield higher fire endurances when subjected to fire endurance tests as parts of floor, roof, or ceiling assemblies than they would when tested separately.

One of the fire endurance test criteria is the ability of a load-supporting element to carry its intended live and dead load. The element will be deemed to have failed when the load can no longer be supported.

Failure usually results for two reasons. Some materials, particularly steel and other metals, lose much of their structural strength at elevated temperatures. Physical deflection of the supporting element, due to decreased strength or thermal expansion, causes a redistribution of the load forces and stresses throughout the element. Structural failure often results because the supporting element is not designed to carry the redistributed load.

Roof, floor, and ceiling assemblies may have primary (e.g., beams) and secondary (e.g., floor joists) structural members. Since the primary load-supporting elements span the largest distances, their deflection becomes significant at a stage when the strength of the secondary members (including the roof or floor surface) is hardly affected by the heat. As the secondary members follow the deflection of the primary load-supporting element, an increasingly larger portion of the load is transferred to the secondary members.

When load-supporting elements are tested separately, the imposed load is constant and equal to the design load throughout the test. By definition, no distribution of the load is possible because the element is being tested by itself. Without any other structural members to which the load could be transferred, the individual elements cannot yield a higher fire endurance than they do when tested as parts of a floor, roof, or ceiling assembly.

Rule 10: The load-supporting elements (beams, girders, joists, etc.) of a floor, roof, or ceiling assembly can be replaced by such other load-supporting elements that, when tested separately, yielded fire endurances not less than that of the assembly.

This rule depends on Rule 9 for its validity. A beam or girder, if capable of yielding a certain performance when tested separately, will yield an equally good or better performance when it forms a part of a floor, roof, or ceiling assembly. It must be emphasized that the supporting element of one assembly must not be replaced by the supporting element of another assembly if the performance of this latter element is not known from a separate (beam) test. Because of the load-reducing effect of the secondary elements that results from a test performed on an assembly, the performance of the supporting element alone cannot be evaluated by simple arithmetic. This rule also indicates the advantage of performing separate fire tests on primary load-supporting elements. *(See Figure O.3.3.1.)*

O.3.3.2 Illustration of Harmathy's Rules. Harmathy provided one schematic figure that illustrated his rules.[4] It should be useful as a quick reference to assist in applying his rules. *(See Figure O.3.3.1.)*

O.3.3.3 Example Application of Harmathy's Rules. The following examples, based in whole or in part upon those presented in Harmathy's paper, show how the rules can be applied to practical cases.

Example 1

Problem

A contractor would like to keep a partition that consists of a $3^3/_4$ in. (95 mm) thick layer of red clay brick, a $1^1/_4$ in. (32 mm) thick layer of plywood, and a $^3/_8$ in. (9.5 mm) thick layer of gypsum wallboard, at a location where 2-hour fire endurance is required. Is this assembly capable of providing a 2-hour protection?

Solution

(1) This partition does not appear in the tables in O.4.5.
(2) Bricks of this thickness yield fire endurances of approximately 75 minutes (Table O.4.5.2, Item W-4-M-2).
(3) The $1^1/_4$ in. (32 mm) thick plywood has a finish rating of 30 minutes.
(4) The $^3/_8$ in. (9.5 mm) gypsum wallboard has a finish rating of 10 minutes.
(5) Using the recommended values from the tables and applying Rule 1, the fire endurance (FI) of the assembly is larger than the sum of the individual layers, or

$$FI > 75 + 30 + 10 = 115 \text{ minutes}$$

Discussion

This example illustrates how the tables in O.4.5 can be utilized to determine the fire resistance of assemblies not explicitly listed.

Example 2

Problem

(1) A number of buildings to be rehabilitated have the same type of roof slab that is supported with different structural elements.
(2) The designer and contractor would like to determine whether or not this roof slab is capable of yielding a 2-hour fire endurance. According to a rigorous interpretation of ASTM E 119, however, only the roof assembly, including the roof slab as well as the cover and the supporting elements, can be subjected to a fire test. Therefore, a fire endurance classification cannot be issued for the slabs separately.
(3) The designer and contractor believe this slab will yield a 2-hour fire endurance even without the cover, and any beam of at least 2-hour fire endurance will provide satisfactory support. Is it possible to obtain a classification for the slab separately?

Solution

(1) The answer to the question is yes.
(2) According to Rule 10, it is not contrary to common sense to test and classify roofs and supporting elements separately. Furthermore, according to Rule 2, if the roof slabs actually yield a 2-hour fire endurance, the endurance of an assembly, including the slabs, cannot be less than 2 hours.

Copyright National Fire Protection Association
Provided by IHS under license with NFPA
No reproduction or networking permitted without license from IHS
Not for Resale

FIGURE O.3.3.1 Diagrammatic Illustration of Harmathy's 10 Rules (t = fire endurance).

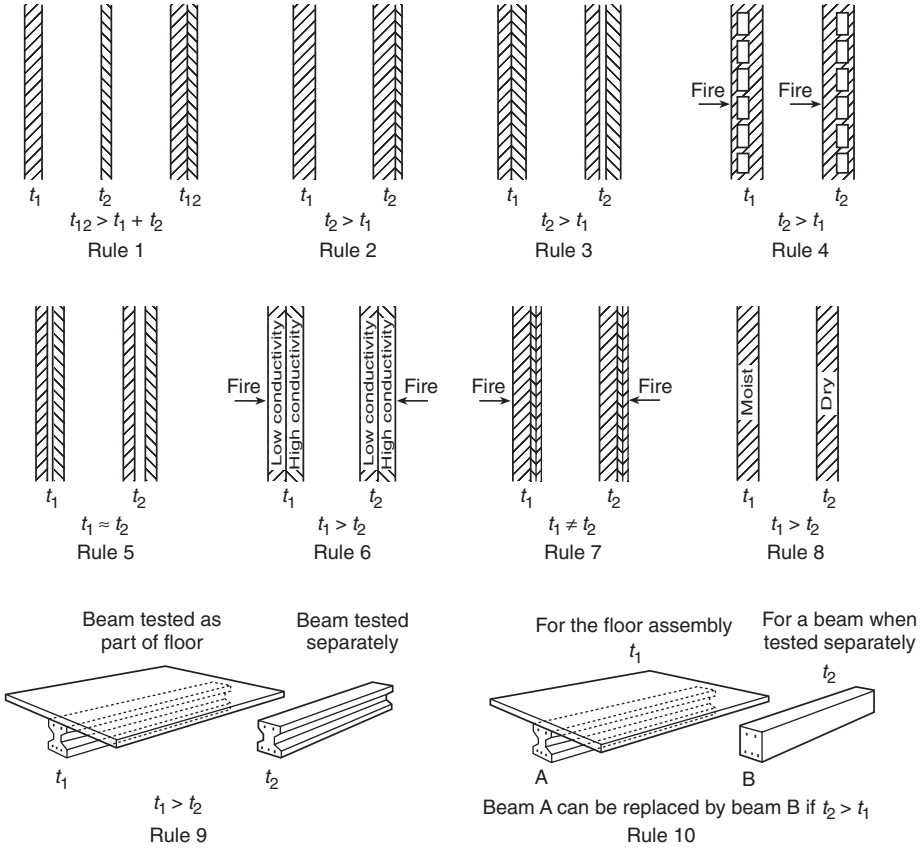

(3) The recommended procedure would be to review the tables to see if the slab appears as part of any tested roof or floor/ceiling assembly. The supporting system can be regarded as separate from the slab specimen, and the fire endurance of the assembly listed in the table is at least the fire endurance of the slab. There would have to be an adjustment for the weight of the roof cover in the allowable load if the test specimen did not contain a cover.

(4) The supporting structure or element would have to have at least a 2-hour fire endurance when tested separately.

Discussion

If the tables did not include tests on assemblies that contained the slab, one procedure would be to assemble the roof slabs on any convenient supporting system (not regarded as part of the specimen) and to subject them to a load that, besides the usually required superimposed load, includes some allowances for the weight of the cover.

Example 3

Problem

A steel joist floor/ceiling assembly is known to have yielded a fire endurance of 1 hour and 35 minutes. At a certain location, a 2-hour endurance is required. What is the most economical way of increasing the fire endurance by at least 25 minutes?

Solution

(1) The most effective technique would be to increase the ceiling plaster thickness. Existing coats of paint would have to be removed and the surface properly prepared before the new plaster could be applied. Other materials (e.g., gypsum wallboard) could also be considered.

(2) There may be other techniques based on other principles, but an examination of the drawings would be necessary.

Discussion

(1) The additional plaster has at least three effects:

a. The layer of plaster is increased and thus there is a gain of fire endurance (Rule 1).

b. There is a gain due to shifting the air gap farther from the exposed surface (Rule 4).

c. There is more moisture in the path of heat flow to the structural elements (Rules 7 and 8).

(2) The increase in fire endurance would be at least as large as that of the finish rating for the added thickness of plaster. The combined effects in (a) above would further increase this by a factor of 2 or more, depending upon the geometry of the assembly.

Example 4

Problem

The fire endurance of Item W-10-M-1 in Table O.4.5.5 is 4 hours. This wall consists of two $3^3/_4$ in. (95 mm) thick layers of structural tiles separated by a 2 in. (50 mm) air gap and $^3/_4$ in. (19 mm) portland cement plaster or stucco on both sides. If the actual wall in the building is identical to Item W-10-M-1 except that it has a 4 in. (102 mm) air gap, can the fire endurance be estimated at 5 hours?

Copyright National Fire Protection Association
Provided by IHS under license with NFPA
No reproduction or networking permitted without license from IHS
Not for Resale

Solution

The answer to the question is no for the reasons contained in Rule 5.

Example 5

Problem

In order to increase the insulating value of its precast roof slabs, a company has decided to use two layers of different concretes. The lower layer of the slabs, where the strength of the concrete is immaterial (all the tensile load is carried by the steel reinforcement), would be made with a concrete of low strength but good insulating value. The upper layer, where the concrete is supposed to carry the compressive load, would remain the original high strength, high thermal conductivity concrete. How will the fire endurance of the slabs be affected by the change?

Solution

The effect on the thermal fire endurance is beneficial as follows:

(1) The total resistance to heat flow of the new slabs has been increased due to the replacement of a layer of high thermal conductivity by one of low conductivity.
(2) The layer of low conductivity is on the side more likely to be exposed to fire, where it is more effectively utilized according to Rule 6. The layer of low thermal conductivity also provides better protection for the steel reinforcement, thereby extending the time before reaching the temperature at which the creep of steel becomes significant.

O.3.4 "Thickness Design" Strategy. The "thickness design" strategy is based upon Harmathy's Rules 1 and 2. This design approach can be used when the construction materials have been identified and measured, but the specific assembly cannot be located within the tables. The tables should be surveyed again for thinner walls of like material and construction detail that have yielded the desired or greater fire endurance. If such an assembly can be found, then the thicker walls in the building have more than enough fire resistance. The thickness of the walls thus becomes the principal concern.

This approach can also be used for floor/ceiling assemblies provided the assembly will support the loading required for fire endurance testing of the subject assembly. However, the thickness of the cover[5] and the slab will become a central concern. The fire resistance of the untested assembly will be at least the fire resistance of an assembly listed in the table having a similar design but with less cover or thinner slabs. For other structural elements (e.g., beams and columns), the element listed in the table must also be of a similar design but with less cover thickness.

O.3.5 Evaluation of Doors. A separate section on doors is included in this guideline because the process for evaluation presented below differs from those suggested previously for other building elements. The impact of unprotected openings or penetrations in fire-resistant assemblies has been discussed in O.2.4, and the importance of door performance on life safety has been stressed. Consistent with this, it is sufficient to note here that improperly or inadequately protected door openings will likely lead to failure of the wall in which they are installed under actual fire conditions.

In all cases, local code requirements for opening protection should be carefully evaluated since many (but not all) 1-hour wall assemblies, for example, require only 20-minute-rated doors to be used. Thus, use of a 1-hour rated fire door assembly under such conditions would present an unwarranted economic hardship.

For other types of building elements (e.g., beams, columns), the tables in O.4.5 can be used to establish a minimum level of fire performance, eliminating the need for a fire test. For doors, however, this cannot be done. The data contained in Table O.4.5.58, Resistance of Doors to Fire Exposure, and NFPA 914, Annex P, BSI Timber Panel Door Standard, only can provide guidance as to whether a successful fire test is even feasible.

For example, a door required to have 1-hour fire resistance is noted in the tables as providing only 5 minutes. The likelihood of achieving the required 1-hour, even if the door is upgraded, is remote. The ultimate need for replacement of the doors is reasonably clear, and the expense and time needed for testing can be saved. However, if the performance documented in the table is near or in excess of what is being required, then a fire test should be conducted. The test documentation can then be used as evidence of compliance with the required level of performance.

The table entries cannot be used as the sole proof of performance of the door in question because there are other variables that could measurably affect fire performance. The wood may have become embrittled over the years, or multiple coats of flammable varnish could have been added. Minor deviations in the internal construction of a door can also result in significant differences in performance. Methods of securing inserts in panel doors can vary. The major nondestructive method of analysis, an x-ray, often cannot provide the necessary detail. It is for these, and similar reasons, that a fire test may still be necessary.

It is often possible to upgrade the fire performance of an existing door. Existing and modified doors can be evaluated side by side in a single series of tests, where the failure of the unmodified door is expected. Because doors upgraded after an initial failure must be tested again, the side-by-side approach can save time and money.

The most common ways that the fire resistance of door assemblies is reduced are the following: the presence of ventilating elements, including transoms; the presence of plain, non-fire-resistant glass; insufficient thickness of poor condition of plywood door panels and panel inserts; and the improper fit of a door in its frame.

Approaches to solving these problems, as shown in Figure O.3.5 and NFPA 914, Annex P, are as follows:

(1) Permanently sealing ventilating elements, such as transoms or ventilation openings in doors, and upgrading their fire resistance to match that of their door assemblies, unless they can be made to close automatically when a fire threat is present. Note that the health and comfort consequences of sealing ventilating elements must be thoroughly evaluated before such work is performed.
(2) Replacing plain glass in doors, transoms, and sidelights with approved or listed wired glass or a contemporary fire-resistant glazing product installed in an approved steel or wood frame.
(3) Upgrading panel inserts either by replacing existing panel materials with materials of greater fire resistance (such as swapping an existing wood panel for a grain-printed or -painted inorganic product with the required fire resistance), using intumescent materials, or adding additional layers of material, such as gypsum wallboard, to the existing panel to enhance fire resistance.

Copyright National Fire Protection Association
Provided by IHS under license with NFPA
No reproduction or networking permitted without license from IHS
Not for Resale

FIGURE O.3.5 Door Modification Details.

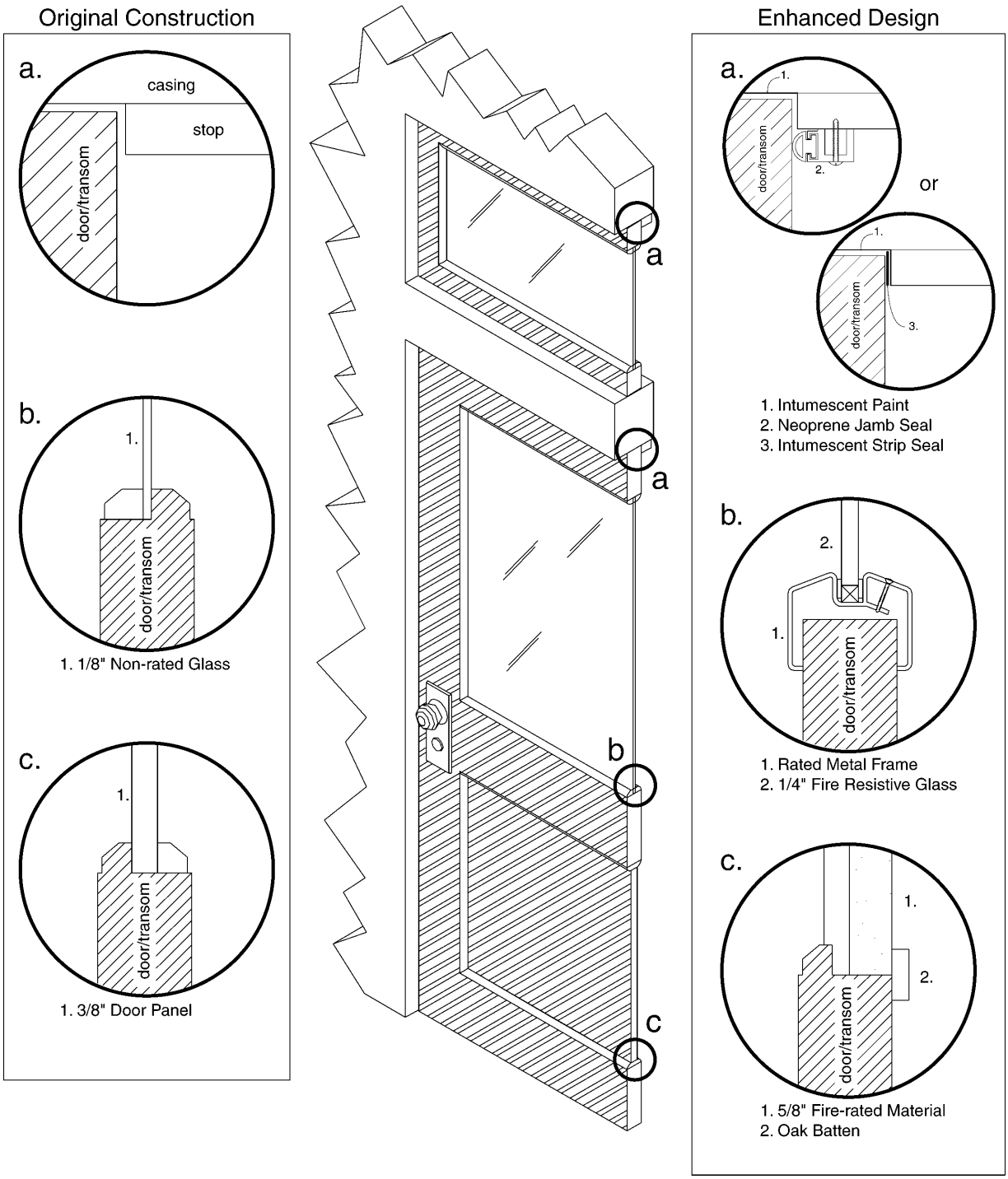

Copyright National Fire Protection Association
Provided by IHS under license with NFPA
No reproduction or networking permitted without license from IHS
Not for Resale

Problems related to the improper fit of doors in their frames can be significant because a fire-affected room may develop substantial positive pressure, causing flames, smoke, and hot gases to work their way through otherwise innocent-looking gaps between the door and frame. To mitigate these hazards, listed intumescent paint or gasketing may be applied to the edges of the door or door frame. These expand when exposed to fire, forming an effective fire-resistant seal at the door edges. The use of intumescent materials is widely accepted in fire door construction and fire door frame designs in the United States and Europe.

Because the interior construction of a door cannot be determined by a visual inspection, there is no absolute guarantee that the remaining doors are identical to the one(s) tested. But the same is true for doors constructed today, and reason and judgment must be applied. Doors that appear identical upon visual inspection can be weighed. If their weights are reasonably close, they can be assumed to be identical and to provide the same level of fire performance. Another approach is to fire test more than one door or to dismantle doors selected at random to determine if they have been constructed in the same manner. Original building plans showing door details or other records showing that doors were purchased at one time or obtained from a single supplier can also be evidence of similar construction.

More often though, it is what is visible to the eye that is most significant. The investigator should carefully check the condition and fit of the door and frame and look for frames out of plumb or separating from the wall. Door closers, latches, and hinges must be examined to see that they function properly and are tightly secured. If these are in order and the door and frame have passed a full-scale test, there can be a reasonable basis for allowing the existing doors to remain. However, the importance of ensuring satisfactory performance of door hardware cannot be overstated. Full-scale tests of door assemblies in which sufficient construction materials are present to provide needed fire endurance but that fail because of untimely door opening are well known to fire testing laboratories and engineers. *(See Figure O.3.5.)*

O.4 Summary

O.4.1 Introduction. This section summarizes the various approaches and design solutions for fire resistance discussed in the preceding sections of the guideline. The term *structural system* includes frames, beams, columns, and other structural elements. *Cover* is a protective layer of materials or membrane that slows the flow of heat to the structural elements. It cannot be stressed too strongly that the fire endurance of actual building elements can be greatly reduced or totally negated by removing part of the cover to allow pipes, ducts, or conduits to pass through the element. This must be repaired in the rehabilitation process.

The approaches in O.4.2 through O.4.4 should be considered equivalent.

O.4.2 Application for Listed Building Elements. The fire resistance of a building element can be established from the tables in O.4.5. This is subject to the following limitations:

(1) The building elements in the rehabilitated building are constructed of the same materials with the same nominal dimensions as stated in the tables.
(2) All penetrations in the building element or its cover for services such as electricity, plumbing, and HVAC are treated in a manner consistent with current practices for new construction, using methods tested and documented for their fire endurance and anticipated durability. Descriptions of many such products and methods are available in fire resistance reference handbooks.
(3) The effects of age and deterioration are repaired so that the building element is sound and the original thickness of all components, particularly covers and floor slabs, is maintained.

This approach essentially follows the approach taken by the model codes, where a material or assembly must be listed in an acceptable publication for a given fire resistance rating to be recognized and accepted.

O.4.3 Application for Unlisted Building Elements. The fire resistance of a building element that does not explicitly appear in the tables in O.4.5 can be established if one or more elements of same design but different dimensions have been listed in the tables in O.4.5.

For walls, the existing element must be thicker than the one listed. For floor/ceiling assemblies, the assembly listed in the table must have the same or less cover and the same or thinner slab constructed of the same material as the actual floor/ceiling assembly. For other structural elements, the element listed in the table must be of a similar design but with less cover thickness. The fire resistance in all instances shall be the fire resistance recommended in the table. This is subject to the following limitations:

(1) The actual element in the rehabilitated building is constructed of the same materials as listed in the table. Only the following dimensions may vary from those specified: for walls, the overall thickness must exceed that specified in the table; for floor/ceiling assemblies, the thickness of the cover and the slab must be greater than or equal to that specified in the table; for other structural elements, the thickness of the cover must be greater than that specified in the table.
(2) All penetrations in the building element or its cover for services such as electricity, plumbing, or HVAC are treated in a manner consistent with current practices for new construction using methods tested and documented for their fire endurance and anticipated durability. Descriptions of many such products and methods are available in fire resistance reference handbooks.
(3) The effects of age and wear and tear are repaired so that the building element is sound and the original thickness of all components, particularly covers and floor slabs, is maintained.

This approach is an application of the "thickness design" concept presented in O.3.4. There should be many instances when a thicker building element was utilized than the one listed in the tables in O.4.5. This guideline recognizes the inherent superiority of a thicker design. Note: *Thickness design* for floor/ceiling assemblies and structural elements refers to cover and slab thickness rather than total thickness.

The "thickness design" concept is essentially a special case of Harmathy's Rules 1 and 2, where the source of data is. If other sources are used, it must be in connection with the approach below.

O.4.4 General Application. The fire resistance of building elements can be established by applying Harmathy's Ten Rules of Fire Endurance Rating as set forth in O.3.3.1 and O.3.3.2, subject to the following limitations:

(1) The data from the tables can be utilized subject to the limitations in O.4.2.

Copyright National Fire Protection Association
Provided by IHS under license with NFPA
No reproduction or networking permitted without license from IHS
Not for Resale

(2) Test reports from recognized journals or published papers can be used to support data utilized in applying Harmathy's Rules.
(3) Calculations utilizing recognized and well-established computational techniques can be used in applying Harmathy's Rules. These include, but are not limited to, analysis of heat flow, mechanical properties, deflections, and load-bearing capacity.

O.4.5 Fire Rating Tables. The tables and histograms in O.4.5 are to be used only within the analytical frame work described in this guideline.

Histograms precede any table with ten or more entries. The use and interpretation of the histograms is explained in Section O.2.

The table format is similar to the one used by the model codes. Table O.4.5, taken from an entry in Table O.4.5.2, explains the column headings, as follows.

Item Code. This column contains the item code for each building element. The code consists of a four-place series, such as W-4-M-50,

where:

W = type of building element; W = walls, F = floors, and so forth
4 = the building element thickness rounded **down** to the nearest 1 in. increment (for example, $4^5/_8$ in. is rounded off to 4 in.)
M = the general type of material from which the building element is constructed; M = masonry, W = wood, and so forth
50 = the sequence number of the particular building element in a table

Thickness. This column identifies the dimension with the greatest impact on fire resistance. The critical dimension for walls (the example shown here) is *thickness*, but it differs for other building elements. For instance, the critical dimension for beams is *depth*, and for some floor/ceiling assemblies it is *membrane thickness*. The dimension shown is the one measured at the time of actual testing to within $\pm^1/_8$ in. tolerance. The thickness includes facings when they are part of the wall construction.

Construction Details. This column provides a brief description of the building element.

Performance. This column is subdivided into two columns in most tables. The first is labeled "Load" and either lists the load that the building element was subjected to during the fire test or refers to a note at the bottom of the table that provides information on the load or other significant details. If the building element was not subjected to a load during the test, the entry will be "n/a" for "not applicable." The second column is labeled "Time" and denotes the actual fire endurance time observed in the fire test.

Reference Number. This column refers to the 1942 National Bureau of Standards publication, Building Material Standard 92, *Fire-Resistance Classifications of Building Constructions*. The column is subdivided into three parts: Pre-BMS-92, BMS-92, and Post BMS-92. Table entries refer to the number of the entry in the bibliography containing the original source reference for the test data.

Notes. The entries in this column refer to notes at the end of the table that contain a more detailed explanation of certain aspects of the test. In some tables, note numbers also appear under the headings "Construction Details" and "Load."

Rec Hours. This column lists the recommended fire endurance rating, in hours or minutes, of the subject building element. This rating is always less than or equal to the rating under the "Time" column.

Table O.4.5 Sample Fire Rating Table

Item Code	Thickness	Construction Details	Performance		Reference Number			Notes	Rec Hours
			Load	Time	Pre-BMS-92	BMS-92	Post-BMS-92		
W-4-M-50	$4^5/_8$"	Core: structural clay tile; see notes 12, 16, 21; facings on unexposed side only; see note 18	n/a	25 min.		1		3,4,24	$^1/_3$

The following is a list of the summary tables and figures.

Section I — Walls

O.4.5.1 Masonry 0"–4" thick
O.4.5.2 Masonry 4"–6" thick
O.4.5.3 Masonry 6"–8" thick
O.4.5.4 Masonry 8"–10" thick
O.4.5.5 Masonry 10"–12" thick
O.4.5.6 Masonry 12"–14" thick
O.4.5.7 Masonry 14" or more thick
O.4.5.8 Metal Frame 0"–4" thick
O.4.5.9 Metal Frame 4"–6" thick
O.4.5.10 Metal Frame 6"–8" thick
O.4.5.11 Metal Frame 8"–10" thick
O.4.5.12 Wood Frame 0"–4" thick
O.4.5.13 Wood Frame 4"–6" thick
O.4.5.14 Wood Frame 6"–8" thick
O.4.5.15 Miscellaneous Materials 0"–4" thick
O.4.5.16 Miscellaneous Materials 4"–6" thick
O.4.5.17 Finish Ratings/Inorganic Materials Thickness
O.4.5.18 Finish Ratings/Organic Materials Thickness

Section II — Columns

O.4.5.19 Reinforced Concrete Minimum Dimension 0"–6"
O.4.5.20 Reinforced Concrete Minimum Dimension 10"–12"
O.4.5.21 Reinforced Concrete Minimum Dimension 12"–14"

--`,,```,,,,````-`-`,,`,,`,`,,`---

Copyright National Fire Protection Association
Provided by IHS under license with NFPA
No reproduction or networking permitted without license from IHS
Not for Resale

O.4.5.22 Reinforced Concrete Minimum Dimension 14"–16"
O.4.5.23 Reinforced Concrete Minimum Dimension 16"–18"
O.4.5.24 Reinforced Concrete Minimum Dimension 18"–20"
O.4.5.25 Reinforced Concrete Minimum Dimension 20"–22"
O.4.5.26 Hexagonal Reinforced Concrete Diameter — 12"–14"
O.4.5.27 Hexagonal Reinforced Concrete Diameter — 14"–16"
O.4.5.28 Hexagonal Reinforced Concrete Diameter — 16"–18"
O.4.5.29 Hexagonal Reinforced Concrete Diameter — 20"–22"
O.4.5.30 Round Cast Iron Column Minimum Dimension
O.4.5.31 Steel — Gypsum Encasements Minimum Area of Solid Material
O.4.5.32 Timber Minimum Dimension
O.4.5.33 Steel/Concrete Encasements Minimum Dimension less than 6"
O.4.5.34 Steel/Concrete Encasements Minimum Dimension 6"–8"
O.4.5.35 Steel/Concrete Encasements Minimum Dimension 8"–10"
O.4.5.36 Steel/Concrete Encasements Minimum Dimension 10"–12"
O.4.5.37 Steel/Concrete Encasements Minimum Dimension 12"–14"
O.4.5.38 Steel/Concrete Encasements Minimum Dimension 14"–16"
O.4.5.39 Steel/Concrete Encasements Minimum Dimension 16"–18"
O.4.5.40 Steel/Plaster Encasements Minimum Dimension 10"–12"
O.4.5.41 Steel/Brick and Block Encasements Minimum Dimension 12"–14"
O.4.5.42 Steel/Brick and Block Encasements Minimum Dimension 14"–16"
O.4.5.43 Steel/Plaster Encasements Minimum Dimension 6"–8"
O.4.5.44 Steel/Plaster Encasements Minimum Dimension 8"–10"
O.4.5.45 Steel/Miscellaneous Encasements Minimum Dimension 6"–8"
O.4.5.46 Steel/Miscellaneous Encasements Minimum Dimension 8"–10"
O.4.5.47 Steel/Miscellaneous Encasements Minimum Dimension 10"–12"
O.4.5.48 Steel/Miscellaneous Encasements Minimum Dimension 12"–14"

Section III — Floor/Ceiling Assemblies

O.4.5.49 Reinforced Concrete Assembly Thickness
O.4.5.50 Steel Structural Elements Membrane Thickness
O.4.5.51 Wood Joist Membrane Thickness
O.4.5.52 Hollow Clay Tile with Reinforced Concrete Assembly Thickness

Section IV — Beams

O.4.5.53 Reinforced Concrete Depth — 10"–12"
O.4.5.54 Reinforced Concrete Depth — 12"–14"
O.4.5.55 Reinforced Concrete Depth —14"–16"
O.4.5.56 Steel/Unprotected Depth — 10"–12"
O.4.5.57 Steel/Concrete Protection Depth — 10"–12"

Section V — Doors

O.4.5.58 Resistance of Doors to Fire Exposure Thickness

FIGURE O.4.5.1 Masonry Walls 0 in. (0 mm) to Less Than 4 in. (100 mm) Thick.

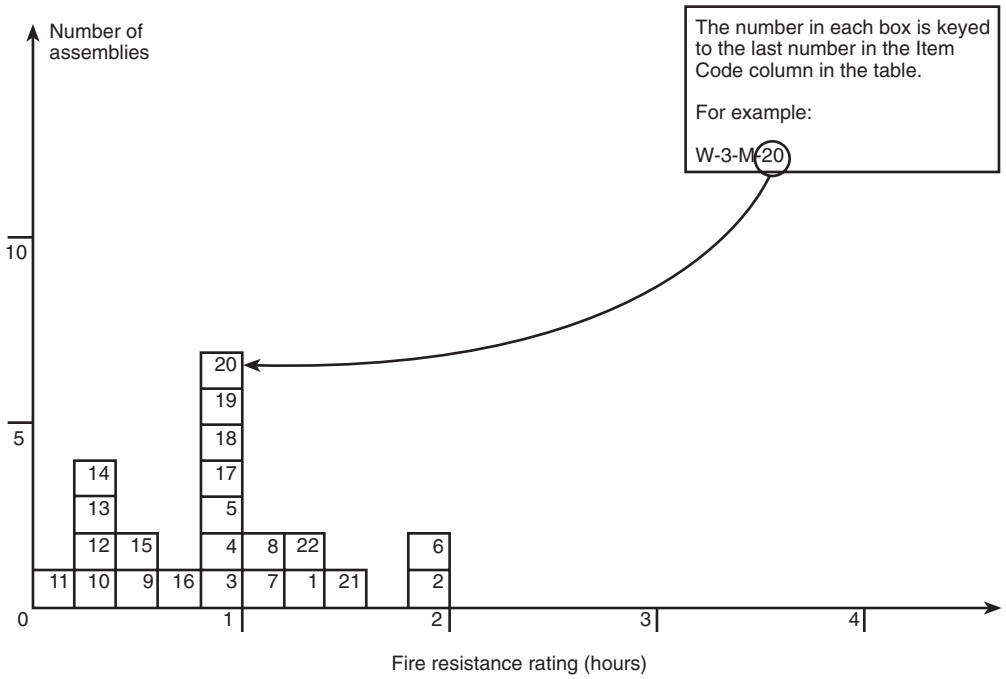

Copyright National Fire Protection Association
Provided by IHS under license with NFPA
No reproduction or networking permitted without license from IHS
Not for Resale

Table O.4.5.1 Masonry Walls 0" (0 mm) to Less Than 4" (100 mm) Thick

Item Code	Thickness	Construction Details	Performance		Reference Number			Notes	Rec Hours
			Load	Time	Pre-BMS-92	BMS-92	Post-BMS-92		
W-2-M-1	$2^1/_4$"	Solid partition; $^3/_4$ gypsum plank — 10" × 16"; $^3/_4$" + gypsum plaster each side	n/a	1 hr 22 min			7	1	$1^1/_4$
W-3-M-2	3"	Concrete block (18" × 9" × 3") of fuel ash, portland cement and plasticizer; cement/sand mortar	n/a	2 hr			7	2,3	2
W-2-M-3	2"	Solid gypsum block wall; no facings	n/a	1 hr		1		4	1
W-3-M-4	3"	Solid gypsum blocks, laid in 1:3 sanded gypsum mortar	n/a	1 hr		1		4	1
W-3-M-5	3"	Magnesium oxysulfate wood fiber blocks; 2" thick; laid in portland cement-lime mortar; facings $^1/_2$" of 1:3 sanded gypsum plaster on both sides	n/a	1 hr		1		4	1
W-3-M-6	3"	Magnesium oxysulfate bound wood fiber blocks; 3" thick; laid in portland cement-lime mortar; facings $^1/_2$" of 1:3 sanded gypsum plaster on both sides	n/a	2 hr		1		4	2
W-3-M-7	3"	Clay tile; Ohio fire clay; single cell thick; face plaster $^5/_8$" (both sides) 1:3 sanded gypsum; construction "A"; design "E"	n/a	1 hr 6 min			2	5,6,7, 11,12	1
W-3-M-8	3"	Clay tile; Illinois surface clay; single cell thick; face plaster $^5/_8$" (both sides) 1:3 sanded gypsum; design "A"; construction "E"	n/a	1 hr 1 min			2	5,8,9, 11,12	
W-3-M-9	3"	Clay tile; Illinois surface clay; single cell thick; no face plaster; construction "C"; design "A"	n/a	25 min			2	5,10, 11,12	$^1/_3$
W-3-M-10	$3^7/_8$"	8" × $4^7/_8$" glass blocks; width 4 lb. each; portland cement-lime mortar; horizontal mortar joints reinforced with metal lath	n/a	15 min		1		4	$^1/_4$
W-3-M-11	3"	Core: structural clay tile; see notes 14, 18, 23; no facings	n/a	10 min		1		5,11,26	$^1/_6$
W-3-M-12	3"	Core: structural clay tile; see notes 14, 19, 23; no facings	n/a	20 min		1		5,11,26	$^1/_3$
W-3-M-13	$3^5/_8$"	Core: structural clay tile; see notes 14, 18, 23; facings on unexposed side per note 20	n/a	20 min		1		5,11,26	$^1/_3$
W-3-M-14	$3^5/_8$"	Core: structural clay tile; see notes 14, 19, 23; facings on unexposed side only per note 20	n/a	20 min		1		5,11,26	$^1/_3$
W-3-M-15	$3^5/_8$"	Core: clay structural tile; see notes 14, 18, 23; facings on side exposed to fire per note 20	n/a	30 min		1		5,11,26	$^1/_2$
W-3-M-16	$3^5/_8$"	Core: clay structural tile; see notes 14, 19, 23; facing on side exposed to fire per note 20	n/a	45 min		1		5,11,26	$^3/_4$
W-2-M-17	2"	2" thick solid gypsum blocks; see note 27	n/a	1 hr		1		27	1
W-3-M-18	3"	Core: 3" thick gypsum blocks 70% solid; see note 2; no facings	n/a	1 hr		1		27	1
W-3-M-19	3"	Core: hollow concrete units; see notes 29, 35, 36, 38; no facings	n/a	1 hr		1		27	1

(Sheet 1 of 2)

Copyright National Fire Protection Association
Provided by IHS under license with NFPA
No reproduction or networking permitted without license from IHS
Not for Resale

Table O.4.5.1 Masonry Walls 0" (0 mm) to Less Than 4" (100 mm) Thick *(Continued)*

Item Code	Thickness	Construction Details	Performance		Reference Number			Notes	Rec Hours
			Load	Time	Pre-BMS-92	BMS-92	Post-BMS-92		
W-3-M-20	3"	Core: hollow concrete units; see notes 28, 35, 36, 37, 38; no facings	n/a	1 hr		1			1
W-3-M-21	$3^1/_2$"	Core: hollow concrete units; see notes 28, 35, 36, 37, 38; facings on one side, per note 37	n/a	$1^1/_2$ hr		1			$1^1/_2$
W-3-M-22	$3^1/_2$"	Core: hollow concrete units; see notes 29, 35, 36, 38; facings on one side per note 37	n/a	$1^1/_2$ hr		1			$1^1/_4$

(Sheet 2 of 2)

Notes:
1. Failure mode — flame thru.
2. Passed 2-hr fire test (Grade "C" fire res. — British).
3. Passed hose stream test.
4. Tested at NBS under ASA. Spec. No. A2-1934. As non-load bearing partitions.
5. Tested at NBS under ASA Spec. No. 42-1934 (ASTM C-19-33) except that hose stream testing where carried out was run on test specimens exposed for full test duration, not for a reduced period as is contemporarily done.
6. Failure by thermal criteria — maximum temperature rise 181°C (325°F).
7. Hose stream failure.
8. Hose stream — pass.
9. Specimen removed prior to any failure occurring.
10. Failure mode — collapse.
11. For clay tile walls, unless the source or density of the clay can be positively identified or determined, it is suggested that the lowest hourly rating for the fire endurance of a clay tile partition of that thickness be followed. Identified sources of clay showing longer fire endurance can lead to longer time recommendations.
12. See appendix of original report for construction and design details for clay tile walls.
13. Load — 80 psi for gross wall area.
14. One cell in wall thickness.
15. Two cells in wall thickness.
16. Double shells plus one cell in wall thickness.
17. One cell in wall thickness, cells filled with broken tile, crushed stone, slag cinders or mixed with mortar.
18. Dense hard-burned clay or shale tile.
19. Medium-burned clay tile.
20. Not less than $^5/_8$" thickness of 1:3 sanded gypsum plaster.
21. Units of not less than 30% solid material.
22. Units of not less than 40% solid material.
23. Units of not less than 50% solid material.
24. Units of not less than 45% solid material.
25. Units of not less than 60% solid material.
26. All tiles laid in portland cement-lime mortar.
27. Blocks laid in 1:3 sanded gypsum mortar voids in blocks not to exceed 30%.
28. Units of expanded slag or pumice aggregates.
29. Units of crushed limestone, blast furnace slag, cinders and expanded clay or shale.
30. Units of calcareous sand and gravel. Coarse aggregate, 60% or more calcite and dolomite.
31. Units of siliceous sand and gravel. 90% or more quartz, chert, or flint.
32. Unit at least 49% solid.
33. Unit at least 62% solid.
34. Unit at least 65% solid.
35. Unit at least 73% solid
36. Ratings based on one unit and one cell in wall thickness.
37. Minimum of $^1/_2$" — 1:3 sanded gypsum plaster.
38. Non-load bearing.
39. See Clay Tile Partition Design Construction drawings.

Copyright National Fire Protection Association
Provided by IHS under license with NFPA
No reproduction or networking permitted without license from IHS
Not for Resale

FIGURE O.4.5.2 Masonry Walls 4 in. (100 mm) to Less Than 6 in. (150 mm) Thick.

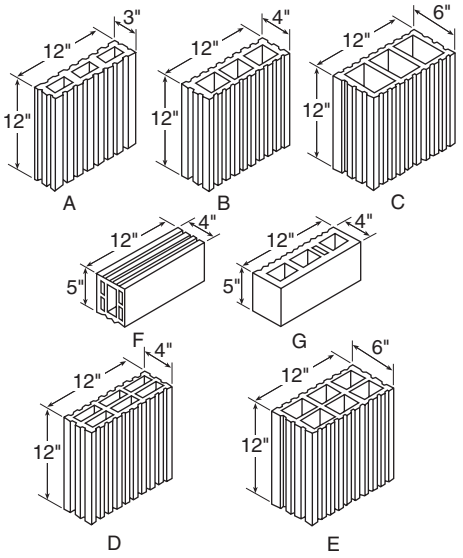

Designs of tiles used in fire-test partitions.

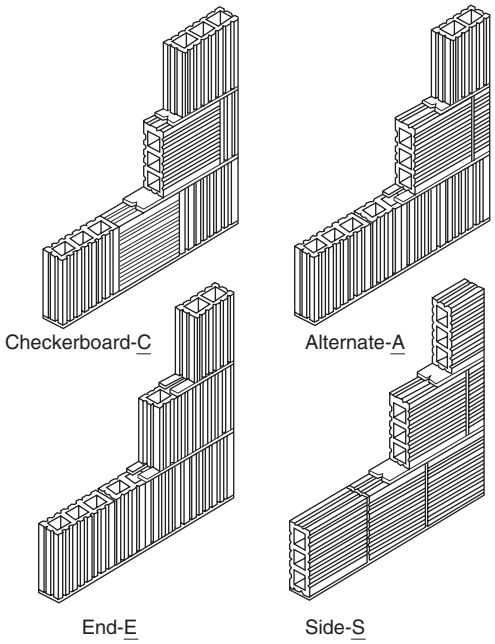

The four types of construction used in fire-test partitions.

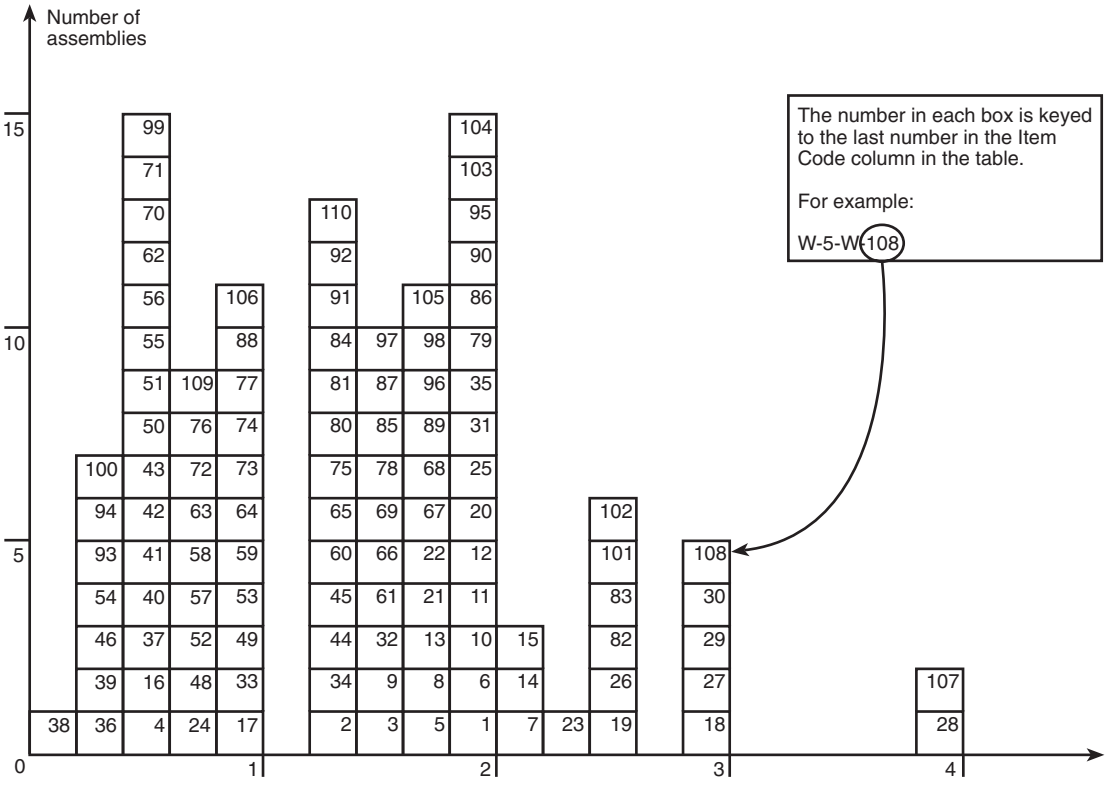

Copyright National Fire Protection Association
Provided by IHS under license with NFPA
No reproduction or networking permitted without license from IHS
Not for Resale

Table O.4.5.2 Masonry Walls 4" (100 mm) to Less Than 6" (150 mm) Thick

Item Code	Thickness	Construction Details	Performance		Reference Number			Notes	Rec Hours
			Load	Time	Pre-BMS-92	BMS-92	Post-BMS-92		
W-4-M-1	4"	Solid 3" thick, gypsum blocks laid in 1:3 sanded gypsum mortar; facings: 1/2" of 1:3 sanded gypsum plaster (both sides)	n/a	2 hr		1		1	2
W-4-M-2	4"	Solid clay or shale brick	n/a	1 hr 15 min		1		1,2	1 1/4
W-4-M-3	4"	Concrete; no facings	n/a	1 hr 30 min		1		1	1 1/2
W-4-M-4	4"	Clay tile; Illinois surface clay; single cell thick; no face plaster; construction "C"; design "B"	n/a	25 min			2	3-7	1/3
W-4-M-5	4"	Solid sand-lime brick	n/a	1 hr 45 min		1		1	1 3/4
W-4-M-6	4"	Solid wall; 3" thick block; 1/2" plaster each side; 17 3/4" × 8 3/4" × 3" "breeze blocks"; portland cement/sand mortar	n/a	1 hr 52 min			7	2	1 3/4
W-4-M-7	4"	Concrete (4020 psi); reinforcement: vertical 3/8"; horizontal 1/4"; 6" × 6" grid	n/a	2 hr 10 min			7	2	2
W-4-M-8	4"	Concrete wall (4340 psi crush); reinforcement: 1/4 " diameter rebar on 8" centers (vertical and horizontal)	n/a	1 hr 40 min			7	2	1 2/3
W-4-M-9	4 3/16"	4 3/16" × 2 5/8" cellular fletton brick (1873 psi) with 1/2" sand mortar; bricks are U-shaped yielding hollow cover (approx. 2" × 4") in final (cross-section) configuration	n/a	1 hr 25 min			7	2	1 1/3
W-4-M-10	4 1/4 "	4 1/4 " × 2 1/2" fletton (1831 psi) brick in 1/2" sand mortar	n/a	1 hr 53 min			7	2	1 3/4
W-4-M-11	4 1/4"	4 1/4" × 2 1/2" London stock (683 psi) brick; 1/2" grout	n/a	1 hr 52 min			7	2	1 3/4
W-4-M-12	4 1/2"	4 1/4" × 2 1/2" Leicester red, wire-cut brick (4465 psi) in 1/2" sand mortar	n/a	1 hr 56 min			7	6	1 3/4
W-4-M-13	4 1/4"	4 1/4" × 2 1/2" stairfoot brick (7527 psi) 1/2" sand mortar	n/a	1 hr 37 min			7	2	1 1/2
W-4-M-14	4 1/4"	4 1/4" × 2 1/2" sand-lime brick (2603 psi) 1/2" sand mortar	n/a	2 hr 6 min			7	2	2
W-4-M-15	4 1/4"	4 1/4" × 2 1/2" concrete brick (2527 psi) 1/2" sand mortar	n/a	2 hr 10 min			7	2	2
W-4-M-16	4 1/2"	4" thick clay tile; Ohio fire clay; single cell thick; no plaster exposed face; 1/2" 1:2 gypsum back face; construction "S"; design "F"	n/a	31 min			2	3–6	1/2
W-4-M-17	4 1/2"	4" thick clay tile; Ohio fire clay; single cell thick; plaster exposed face: 1/2"; 1:2 sanded gypsum; back face: none; design "F"; construction "S"	80 psi	50 min			2	3–5,8	3/4
W-4-M-18	4 1/2"	Core: solid sand-lime brick; 1/2" sanded gypsum plaster facings on both sides	80 psi	3 hr		1		1,11	3

(Sheet 1 of 7)

Copyright National Fire Protection Association
Provided by IHS under license with NFPA
No reproduction or networking permitted without license from IHS
Not for Resale

Table O.4.5.2 Masonry Walls 4" (100 mm) to Less Than 6" (150 mm) Thick *(Continued)*

Item Code	Thickness	Construction Details	Performance		Reference Number			Notes	Rec Hours
			Load	Time	Pre-BMS-92	BMS-92	Post-BMS-92		
W-4-M-19	4 1/2"	Core: solid sand-lime brick; 1/2" sanded gypsum plaster facings on both sides	80 psi	2 hr 30 min		1		1,11	2 1/2
W-4-M-20	4 1/2"	Core: concrete brick 1/2" of 1:3 sanded gypsum plaster facings on both sides	80 psi	2 hr		1		1,11	2
W-4-M-21	4 1/2"	Core: solid clay or shale bricks; 1/2" thick, 1:3 sanded gypsum plaster facings on fire sides	80 psi	1 hr 45 min		1		1,2,11	1 3/4
W-4-M-22	4 3/4"	4" thick clay tile; Ohio fire clay; single cell thick; cells filled with cement and broken tile concrete; plaster on exposed face: none on unexposed face 3/4" 1:3 sanded gypsum; construction "E"; design "G"	n/a	1 hr 48 min			2	2,3–5,9	1 3/4
W-4-M-23	4 3/4"	4" thick clay tile; Ohio fire clay; single cell thick; cells filled with cement and broken tile concrete; no plaster exposed face; 3/4" neat gypsum plaster on unexposed face; design "G," construction "F"	n/a	2 hr. 14 min			2	2,3–5,9	2
W-5-M-24	5"	3" × 13" airspace; 1" thick metal reinforced concrete facings on both sides; faces connected with wood splines	2,250 lb/ft.	45 min		1		1	3/4
W-5-M-25	5"	Core: 3" thick void filled with "nodulated" mineral wool weighing 10 lb/ft^3; 1" thick metal reinforced concrete facings on both sides	2,250 lb/ft.	2 hr		1		1	2
W-5-M-26	5"	Core: solid clay or shale brick; 1/2" thick, 1:3 sanded gypsum plaster facings on both sides	40 psi	2 hr 30 min		1		1,2,11	2 1/2
W-5-M-27	5"	Core: solid 4" thick gypsum blocks, laid in 1:3 sanded gypsum mortar; 1/2" of 1:3 sanded gypsum plaster facings on both sides	n/a	3 hr		1		1	3
W-5-M-28	5"	Core: 4" thick hollow gypsum blocks with 30% voids; blocks laid in 1:3 sanded gypsum mortar; no facings	n/a	4 hr		1		1	4
W-5-M-29	5"	Core: concrete brick; 1/2" of 1:3 sanded gypsum plaster facings on both sides	160 psi	3 hr		1		1	3
W-5-M-30	5 1/4	4" thick clay tile; Illinois surface clay; double cell thick; plaster — 5/8" thick sanded gypsum 1:3 both faces; design "P"; construction "S"	n/a	2 hr 53 min			2	2–5,9	2 3/4
W-5-M-31	5 1/4"	4" thick clay tile; New Jersey fire clay; double cell thick; plaster — 5/8" sanded gypsum 1:3 both faces; design "D"; construction "S"	n/a	1 hr 52 min			2	2-5,9	1 3/4
W-5-M-32	5 1/4"	4" thick clay tile; New Jersey fire clay; single cell thick; 5/8" plaster on both sides: 1:3 sanded gypsum; design "D"; construction "S"	n/a	1 hr 34 min			2	2–5,9	1 1/2

(Sheet 2 of 7)

Copyright National Fire Protection Association
Provided by IHS under license with NFPA
No reproduction or networking permitted without license from IHS
Not for Resale

Table O.4.5.2 Masonry Walls 4" (100 mm) to Less Than 6" (150 mm) Thick *(Continued)*

Item Code	Thickness	Construction Details	Performance		Reference Number			Notes	Rec Hours
			Load	Time	Pre-BMS-92	BMS-92	Post-BMS-92		
W-5-M-33	$5^1/_4$"	4" thick clay tile; New Jersey fire clay; single cell thick; face plaster — $^5/_8$" both sides; 1:3 sanded gypsum; construction "S"; design "B"	n/a	50 min			2	3–5,8	$^3/_4$
W-5-M-34	$5^1/_4$"	4" thick clay tile; Ohio fire clay; single cell thick; face plaster — $^5/_8$" both sides; 1:3 sanded gypsum; construction "A"; design "B"	n/a	1 hr 19 min			2	2–5,9	$1^1/_4$
W-5-M-35	$5^1/_4$"	4" thick clay tile; Illinois surface clay; single cell thick; face plaster — $^5/_8$" both sides; 1:3 sanded gypsum; construction "S"; design "B"	n/a	1 hr 59 min			2	2–5,10	$1^3/_4$
W-4-M-36	4"	Core: structural clay tile; see notes 12, 16, 21; no facings	n/a	15 min		1		3,4,24	$^1/_4$
W-4-M-37	4"	Core: structural clay tile; see notes 12, 17, 21; no facings	n/a	25 min		1		3,4,24	$^1/_3$
W-4-M-38	4"	Core: structural clay tile; see notes 12, 16, 20; no facings	n/a	10 min		1		3,4,24	$^1/_6$
W-4-M-39	4"	Core: structural clay tile; see notes 12, 17, 20; no facings	n/a	20 min		1		3,4,24	$^1/_3$
W-4-M-40	4"	Core: structural clay tile; see notes 13, 16, 23; no facings	n/a	30 min		1		3,4,24	$^1/_2$
W-4-M-41	4"	Core: structural clay tile; see notes 13, 17, 23; no facings	n/a	35 min		1		3,4,24	$^1/_2$
W-4-M-42	4"	Core: structural clay tile; see notes 13, 16, 21; no facings	n/a	25 min		1		3,4,24	$^1/_3$
W-4-M-43	4"	Core: structural clay tile; see notes 13, 17, 21; no facings	n/a	30 min		1		3,4,24	$^1/_2$
W-4-M-44	4"	Core: structural clay tile; see notes 15, 16, 20; no facings	n/a	1 hr 15 min		1		3,4,24	$1^1/_4$
W-4-M-45	4"	Core: structural clay tile; see notes 15, 17, 20; no facings	n/a	1 hr 15 min		1		3,4,24	$1^1/_4$
W-4-M-46	4"	Core: structural clay tile; see notes 14, 16, 22; no facings	n/a	20 min		1		3,4,24	$^1/_3$
W-4-M-47	4"	Core: structural clay tile; see notes 14, 17, 22; no facings	n/a	25 min		1		3,4,24	$^1/_3$
W-4-M-48	$4^1/_4$"	Core: structural clay tile; see notes 12, 16, 21; facings on both sides; see note 18	n/a	45 min		1		3,4,24	$^3/_4$
W-4-M-49	$4^1/_4$"	Core: structural clay tile; see notes 12, 17, 21; facings on both sides; see note 18	n/a	1 hr		1		3,4,24	1
W-4-M-50	$4^5/_8$"	Core: structural clay tile; see notes 12, 16, 21; facings on unexposed side only; see note 18	n/a	25 min		1		3,4,24	$^1/_3$
W-4-M-51	$4^5/_8$"	Core: structural clay tile; see notes 12, 17, 21; facings on unexposed side only; see note 18	n/a	30 min		1		3,4,24	$^1/_2$

(Sheet 3 of 7)

Copyright National Fire Protection Association
Provided by IHS under license with NFPA
No reproduction or networking permitted without license from IHS
Not for Resale

Table O.4.5.2 Masonry Walls 4" (100 mm) to Less Than 6" (150 mm) Thick *(Continued)*

Item Code	Thickness	Construction Details	Performance		Reference Number			Notes	Rec Hours
			Load	Time	Pre-BMS-92	BMS-92	Post-BMS-92		
W-4-M-52	$4^5/_8$"	Core: structural clay tile; see notes 12, 16, 21; facings on exposed side only; see note 18	n/a	45 min		1		3,4,24	$^3/_4$
W-4-M-53	$4^5/_8$"	Core: structural clay tile; see notes 12, 17, 21; facings on fire side only; see note 18	n/a	1 hr		1		3,4,24	1
W-4-M-54	$4^5/_8$"	Core: structural clay tile; see notes 12, 16, 20; facings on unexposed side; see note 18	n/a	20 min		1		3,4,24	$^1/_3$
W-4-M-55	$4^5/_8$"	Core: structural clay tile; see notes 12, 17, 20; facings on unexposed side; see note 18	n/a	25 min		1		3,4,24	$^1/_3$
W-4-M-56	$4^5/_8$"	Core: structural clay tile; see notes 12, 16, 20; facings on fire side only; see note 18	n/a	30 min		1		3,4,24	$^1/_2$
W-4-M-57	$4^5/_8$"	Core: structural clay tile; see notes 12, 17, 20; facings on fire side only; see note 18	n/a	45 min		1		3,4,24	$^3/_4$
W-4-M-58	$4^5/_8$"	Core: structural clay tile; see notes 13, 16, 23; facings on unexposed side only; see note 18	n/a	40 min		1		3,4,24	$^2/_3$
W-4-M-59	$4^5/_8$"	Core: structural clay tile; see notes 13, 17, 23; facing on unexposed side only; see note 18	n/a	1 hr		1		3,4,24	1
W-4-M-60	$4^5/_8$"	Core: structural clay tile; see notes 13, 16, 23; facing on fire side only; see note 18	n/a	1 hr 15 min		1		3,4,24	$1^1/_4$
W-4-M-61	$4^5/_8$"	Core: structural clay tile; see notes 13, 17, 23; facing on fire side only; see note 18	n/a	1 hr 30 min		1		3,4,24	$1^1/_2$
W-4-M-62	$4^5/_8$"	Core: structural clay tile; see notes 13, 16, 21; facing on unexposed side only; see note 18	n/a	35 min		1		3,4,24	$^1/_2$
W-4-M-63	$4^5/_8$"	Core: structural clay tile; see notes 13, 17, 21; facings on unexposed face only; see note 18	n/a	45 min		1		3,4,24	$^3/_4$
W-4-M-64	$4^5/_8$"	Core: structural clay tile; see notes 13, 16, 23; facing on exposed face only; see note 18	n/a	1 hr		1		3,4,24	1
W-4-M-65	$4^5/_8$"	Core: structural clay tile; see notes 13, 17, 21; facing on exposed side only; see note 18	n/a	1 hr 15 min		1		3,4,24	$1^1/_4$
W-4-M-66	$4^5/_8$"	Core: structural clay tile; see notes 15, 17, 20; facings on unexposed side only; see note 18	n/a	1 hr 30 min		1		3,4,24	$1^1/_2$
W-4-M-67	$4^5/_8$"	Core: structural clay tile; see notes 15, 16, 20; facings on exposed side only; see note 18	n/a	1 hr 45 min		1		3,4,24	$1^3/_4$
W-4-M-68	$4^5/_8$"	Core: structural clay tile; see notes 15, 17, 20; facings on exposed side only; see note 18	n/a	1 hr 45 min		1		3,4,24	$1^3/_4$
W-4-M-69	$4^5/_8$"	Core: structural clay tile; see notes 15, 16, 20; facings on unexposed side only; see note 18	n/a	1 hr 30 min		1		3,4,24	$1^1/_2$

(Sheet 4 of 7)

Copyright National Fire Protection Association
Provided by IHS under license with NFPA
No reproduction or networking permitted without license from IHS
Not for Resale

Table O.4.5.2 Masonry Walls 4" (100 mm) to Less Than 6" (150 mm) Thick *(Continued)*

Item Code	Thickness	Construction Details	Performance		Reference Number			Notes	Rec Hours
			Load	Time	Pre-BMS-92	BMS-92	Post-BMS-92		
W-4-M-70	$4^5/_8$"	Core: structural clay tile; see notes 14, 16, 22; facings on unexposed side only; see note 18	n/a	30 min		1		3,4,24	$^1/_2$
W-4-M-71	$4^5/_8$"	Core: structural clay tile; see notes 14, 17, 22; facings on unexposed side only; see note 18	n/a	35 min		1		3,4,24	$^1/_2$
W-4-M-72	$4^5/_8$"	Core: structural clay tile; see notes 14, 16, 22; facings on fire side of wall only; see note 18	n/a	45 min		1		3,4,24	$^3/_4$
W-4-M-73	$4^5/_8$"	Core: structural clay tile; see notes 14, 17, 22; facings on fire side of wall only; see note 18	n/a	1 hr		1		3,4,24	1
W-5-M-74	$5^1/_4$"	Core: structural clay tile; see notes 12, 16, 21; facings on both sides; see note 18	n/a	1 hr		1		3,4,24	1
W-5-M-75	$5^1/_4$"	Core: structural clay tile; see notes 12, 17, 21; facings on both sides; see note 18	n/a	1 hr 15 min		1		3,4,24	$1^1/_4$
W-5-M-76	$5^1/_4$"	Core: structural clay tile; see notes 12, 16, 20; facings on both sides; see note 18	n/a	45 min		1		3,4,24	$^3/_4$
W-5-M-77	$5^1/_4$"	Core: structural clay tile; see notes 12, 17, 20; facings on both sides; see note 18	n/a	1 hr		1		3,4,24	1
W-5-M-78	$5^1/_4$"	Core: structural clay tile; see notes 13, 16, 23; facings on both sides of wall; see note 18	n/a	1 hr 30 min		1		3,4,24	$1^1/_2$
W-5-M-79	$5^1/_4$"	Core: structural clay tile; see notes 13, 17, 23; facings on both sides of wall; see note 18	n/a	2 hr		1		3,4,24	2
W-5-M-80	$5^1/_4$"	Core: structural clay tile; see notes 13, 16, 21; facings on both sides of wall; see note 18	n/a	1 hr 15 min		1		3,4,24	$1^1/_4$
W-5-M-81	$5^1/_4$"	Core: structural clay tile; see notes 13, 16, 21; facing on both sides of wall; see note 18	n/a	1 hr 30 min		1		3,4,24	$1^1/_2$
W-5-M-82	$5^1/_4$"	Core: structural clay tile; see notes 15, 16, 20; facings on both sides; see note 18	n/a	2 hr 30 min		1		3,4,24	$2^1/_2$
W-5-M-83	$5^1/_4$"	Core: structural clay tile; see notes 15, 17, 20; facings on both sides; see note 18	n/a	2 hr 30 min		1		3,4,24	$2^1/_2$
W-5-M-84	$5^1/_4$"	Core: structural clay tile; see notes 14, 16, 22; facings on both sides of wall; see note 18	n/a	1 hr 15 min		1		3,4,24	$1^1/_4$
W-5-M-85	$5^1/_4$"	Core: structural clay tile; see notes 14, 17, 22; facings on both sides of wall; see note 18	n/a	1 hr 30 min		1		3,4,24	$1^1/_2$
W-4-M-86	4"	Core: 3" thick gypsum blocks 70% solid; see note 26; facings on both sides per note 25	n/a	2 hr		1			2
W-4-M-87	4"	Core: hollow concrete units; see notes 27, 34, 35; no facings	n/a	1 hr 30 min		1			$1^1/_2$

(Sheet 5 of 7)

Copyright National Fire Protection Association
Provided by IHS under license with NFPA
No reproduction or networking permitted without license from IHS
Not for Resale

Table O.4.5.2 Masonry Walls 4" (100 mm) to Less Than 6" (150 mm) Thick *(Continued)*

Item Code	Thickness	Construction Details	Performance		Reference Number			Notes	Rec Hours
			Load	Time	Pre-BMS-92	BMS-92	Post-BMS-92		
W-4-M-88	4"	Core: hollow concrete units; see notes 28, 33, 35; no facings	n/a	1 hr		1			1
W-4-M-89	4"	Core: hollow concrete units; see notes 28, 34, 35; facings on both sides per note 25	n/a	1 hr 45 min		1			$1\frac{3}{4}$
W-4-M-90	4"	Core: hollow concrete units; see notes 27, 34, 35; facings on both sides per note 25	n/a	2 hr		1			2
W-4-M-91	4"	Core: hollow concrete units; see notes 27, 32, 35; no facings	n/a	1 hr 15 min		1			$1\frac{1}{4}$
W-4-M-92	4"	Core: hollow concrete units; see notes 28, 34, 35; no facings	n/a	1 hr 15 min		1			$1\frac{1}{4}$
W-4-M-93	4"	Core: hollow concrete units; see notes 29, 32, 35; no facings	n/a	20 min		1			$\frac{1}{3}$
W-4-M-94	4"	Core: hollow concrete units; see notes 30, 34, 35; no facings	n/a	15 min		1			$\frac{1}{4}$
W-4-M-95	$4\frac{1}{2}$"	Core: hollow concrete units; see notes 27, 34, 35; facing on one side only; see note 25	n/a	2 hr		1			2
W-4-M-96	$4\frac{1}{2}$"	Core: hollow concrete units; see notes 27, 32, 35; facing on one side only; see note 25	n/a	1 hr 45 min		1			$1\frac{3}{4}$
W-4-M-97	$4\frac{1}{2}$"	Core: hollow concrete units; see notes 28, 33, 35; facing on one side per note 25	n/a	1 hr 30 min		1			$1\frac{1}{2}$
W-4-M-98	$4\frac{1}{2}$"	Core: hollow concrete units; see notes 28, 34, 35; facing on one side only per note 25	n/a	1 hr 45 min		1			$1\frac{3}{4}$
W-4-M-99	$4\frac{1}{2}$"	Core: hollow concrete units; see notes 29, 32, 35; facing on one side per note 25	n/a	30 min		1			$\frac{1}{2}$
W-4-M-100	$4\frac{1}{2}$"	Core: hollow concrete units; see notes 30, 34, 35; facing on one side per note 25	n/a	20 min		1			$\frac{1}{3}$
W-5-M-101	5"	Core: hollow concrete units; see notes 27, 34, 35; facings on both sides; see note 25	n/a	2 hr 30 min		1			$2\frac{1}{2}$
W-5-M-102	5"	Core: hollow concrete units; see notes 27, 32, 35; facings on both sides per note 25	n/a	2 hr 30 min		1			$2\frac{1}{2}$
W-5-M-103	5"	Core: hollow concrete units; see notes 28, 33, 35; facings on both sides per note 25	n/a	2 hr		1			2
W-5-M-104	5"	Core: hollow concrete units; see notes 28, 31, 35; facings on both sides per note 25	n/a	2 hr		1			2
W-5-M-105	5"	Core: hollow concrete units; see notes 29, 32, 35; facings on both sides per note 25	n/a	1 hr 45 min		1			$1\frac{3}{4}$

(Sheet 6 of 7)

Copyright National Fire Protection Association
Provided by IHS under license with NFPA
No reproduction or networking permitted without license from IHS
Not for Resale

Table O.4.5.2 Masonry Walls 4" (100 mm) to Less Than 6" (150 mm) Thick *(Continued)*

Item Code	Thickness	Construction Details	Performance		Reference Number			Notes	Rec Hours
			Load	Time	Pre-BMS-92	BMS-92	Post-BMS-92		
W-5-M-106	5"	Core: hollow concrete units; see notes 30, 34, 35; facings on both sides per note 25	n/a	1 hr		1			1
W-5-M-107	5"	Core: 5" thick solid gypsum blocks; see note 26; no facings	n/a	4 hr		1			4
W-5-M-108	5"	Core: 4" thick hollow gypsum blocks; see note 26; facings on both sides per note 25	n/a	3 hr		1			3
W-5-M-109	4"	Concrete with 4" × 4" No. 6 welded wire mesh at wall center	100 psi	45 min			43	2	$^{3}/_{4}$
W-5-M-110	4"	Concrete with 4" × 4" No. 6 welded wire mesh at wall center	n/a	1 hr 15 min			43	2	$1^{1}/_{4}$

(Sheet 7 of 7)

Notes:
1. Tested at NBS under ASA Spec. No. A 2-1934.
2. Failure mode — maximum temperature rise.
3. Tested at NBS under ASA Spec. No. 42-1934 (ASTM C-19-53) except that hose stream testing where carried out was run on test specimens exposed for full test duration, not for a reduced period as is contemporarily done.
4. For clay tile walls, unless the source of the clay can be positively identified, it is suggested that the most pessimistic hour rating for the fire endurance of a clay tile partition of that thickness be followed. Identified sources of clay showing longer fire endurance can lead to longer time recommendations.
5. See appendix of original report for construction and design details for clay tile walls.
6. Failure mode — flame thru or crack formation showing flames.
7. Hole formed at 25 minimum; partition collapsed at 42 minimum on removal from furnace.
8. Failure mode — collapse.
9. Hose stream — pass.
10. Hose stream hole formed in specimen.
11. Load — 80 psi for gross wall cross-sectioned area.
12. One cell in wall thickness.
13. Two cells in wall thickness.
14. Double cells plus one cell in wall thickness.
15. One cell in wall thickness, cells filled with broken tile, crushed stone, slag, cinders, or sand mixed with mortar.
16. Dense hard-burned clay or shale tile.
17. Medium-burned clay tile.
18. Not less than $^{5}/_{8}$" thickness of 1:3 sanded gypsum plaster.
19. Units of not less than 30% solid material.
20. Units of not less than 40% solid material.
21. Units of not less than 50% solid material.
22. Units of not less than 45% solid material.
23. Units of not less than 60% solid material.
24. All tiles laid in portland cement-lime mortar.
25. Minimum $^{1}/_{2}$" — 1:3 sanded gypsum plaster.
26. Laid in 1:3 sanded gypsum mortar. Voids in hollow units not to exceed 30%.
27. Units of expanded slag or pumice aggregate.
28. Units of crushed limestone, blast furnace slag, cinders, and expanded clay or shale.
29. Units of calcareous sand and gravel. Coarse aggregate, 60% or more calcite and dolomite.
30. Units of siliceous sand and gravel. 90% or more quartz, chert, or flint.
31. Unit at least 49% solid.
32. Unit at least 62% solid.
33. Unit at least 65% solid.
34. Unit at least 73% solid.
35. Ratings based on one unit and one cell in wall thickness.

Copyright National Fire Protection Association
Provided by IHS under license with NFPA
No reproduction or networking permitted without license from IHS
Not for Resale

FIGURE O.4.5.3 Masonry Walls 6 in. (150 mm) to Less Than 8 in. (200 mm) Thick.

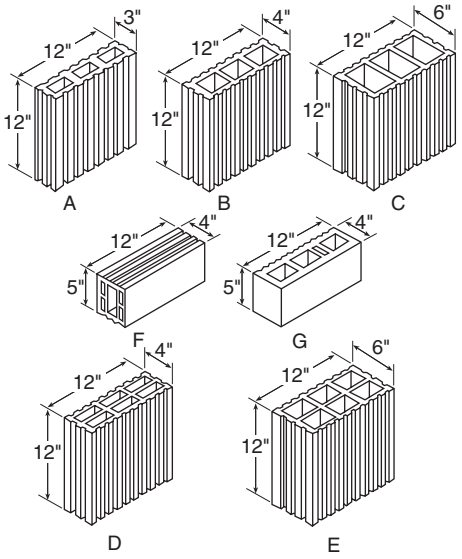

Designs of tiles used in fire-test partitions.

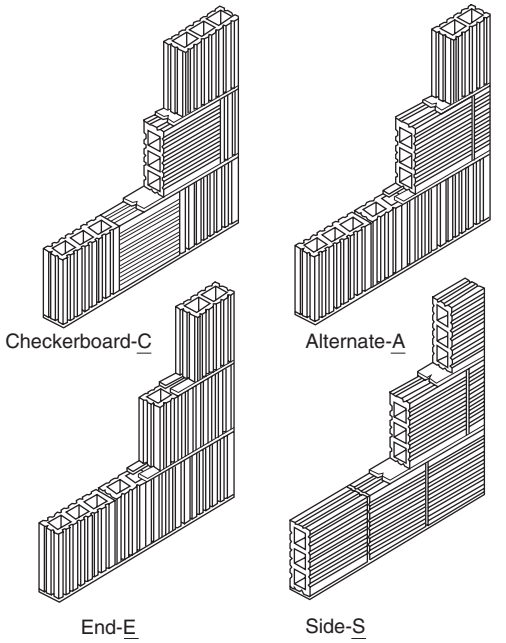

The four types of construction used in fire-test partitions.

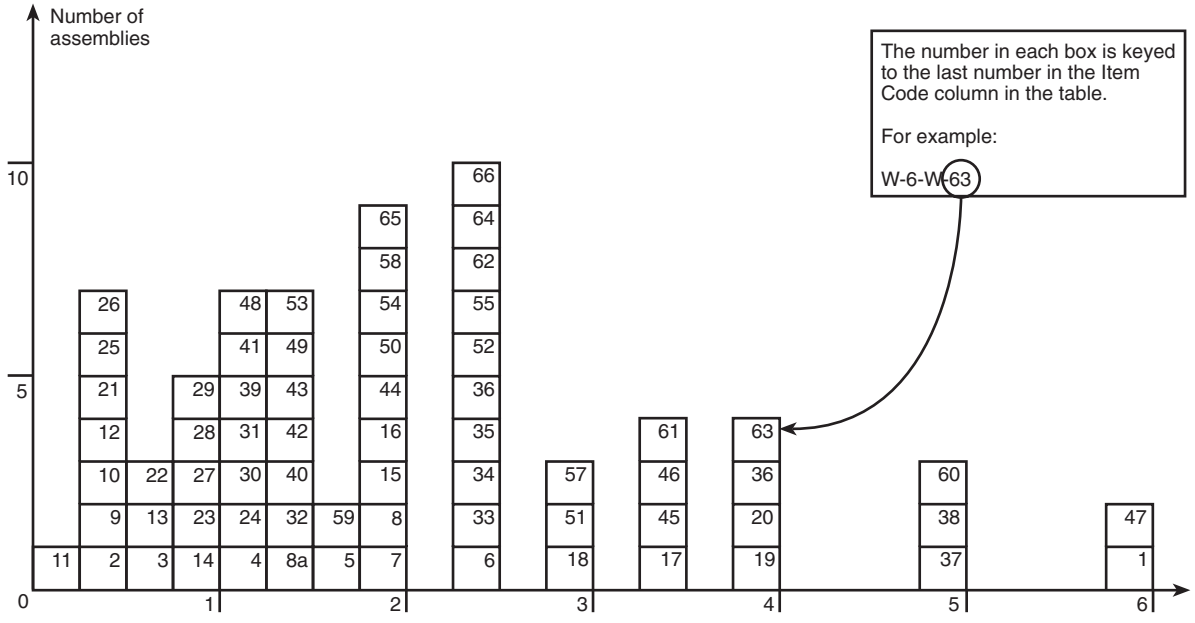

Copyright National Fire Protection Association
Provided by IHS under license with NFPA
No reproduction or networking permitted without license from IHS
Not for Resale

Table O.4.5.3 Masonry Walls 6" (150 mm) to Less Than 8" Thick (150 mm)/(200 mm)

Item Code	Thickness	Construction Details	Performance		Reference Number			Notes	Rec Hours
			Load	Time	Pre-BMS-92	BMS-92	Post-BMS-92		
W-6-M-1	6"	Core: 5" thick, solid gypsum blocks laid in 1:3 sanded gypsum mortar; $^1/_2$" of 1:3 sanded gypsum plaster facings on both sides	n/a	6 hr		1			6
W-6-M-2	6"	6" clay tile; Ohio fire clay; single cell thick; plaster — none; design "C"; construction "A"	n/a	17 min			2	1,3,4,6	$^1/_4$
W-6-M-3	6"	6" clay tile; Illinois surface clay; double cell thick; no plaster; design "E"; construction "S"	n/a	45 min			2	1–4,7	$^3/_4$
W-6-M-4	6"	6" clay tile; New Jersey fire clay; double cell thick; no plaster; design "E"; construction "S"	n/a	1 hr 1 min			2	1–4,8	1
W-7-M-5	$7^1/_4$"	6" clay tile; Illinois surface clay; double cell thick; plaster: $^5/_8$" — 1:3 sanded gypsum both faces; design "E"; construction "A"	n/a	1 hr 41 min			2	1–4	$1^2/_3$
W-7-M-6	$7^1/_4$"	6" clay tile; New Jersey fire clay; Double cell thick; plaster: $^5/_8$" — 1:3 sanded gypsum both faces; design "E"; construction "S"	n/a	2 hr 23 min			2	1–4,9	$2^1/_3$
W-7-M-7	$7^1/_4$"	6" clay tile; Ohio fire clay; single cell thick; plaster: $^5/_8$" sanded gypsum; 1:3 both faces; design "C"; construction "A"	n/a	1 hr 54 min			2	1–4,9	$2^3/_4$
W-7-M-8	$7^1/_4$"	6" clay tile; Illinois surface clay; single cell thick; plaster: $^5/_8$" sanded gypsum 1:3 both faces; design "C"; construction "S"	n/a	2 hr			2	1,3,4, 9,10	2
W-7-M-8a	$7^1/_4$"	6" clay tile; Illinois surface clay; single cell thick; plaster: $^5/_8$" sanded gypsum 1:3 both faces; design "C"; construction "E"	n/a	1 hr 23 min			2	1–4,9, 10,55	$1^1/_4$
W-6-M-9	6"	Core: structural clay tile; see notes 12, 16, 20; no facings	n/a	20 min		1		3,5,25	$^1/_3$
W-6-M-10	6"	Core: structural clay tile; see notes 12, 17, 20; no facings	n/a	25 min		1		3,5,24	$^1/_3$
W-6-M-11	6"	Core: structural clay tile; see notes 12, 16, 19; no facings	n/a	15 min		1		3,5,24	$^1/_4$
W-6-M-12	6"	Core: structural clay tile; see notes 12, 17, 19; no facings	n/a	20 min		1		3,5,24	$^1/_3$
W-6-M-13	6"	Core: structural clay tile; see notes 13, 16, 22; no facings	n/a	45 min		1		3,5,24	$^3/_4$
W-6-M-14	6"	Core: structural clay tile; see notes 13, 17, 22; no facings	n/a	1 hr		1		3,5,24	1
W-6-M-15	6"	Core: structural clay tile; see notes 15, 17, 19; no facings	n/a	2 hr		1		3,5,24	2

(Sheet 1 of 5)

--`,,```,,,,````-`-`,,`,,`,`,,`---
Copyright National Fire Protection Association
Provided by IHS under license with NFPA
No reproduction or networking permitted without license from IHS
Not for Resale

Table O.4.5.3 Masonry Walls 6" (150 mm) to Less Than 8" Thick (150 mm)/(200 mm) ***(Continued)***

Item Code	Thickness	Construction Details	Performance		Reference Number			Notes	Rec Hours
			Load	Time	Pre-BMS-92	BMS-92	Post-BMS-92		
W-6-M-16	6"	Core: structural clay tile; see notes 15, 16, 19; no facings	n/a	2 hr		1		3,5,24	2
W-6-M-17	6"	Cored concrete masonry; see notes 12, 34, 26, 38, 41; no facings	80 psi	3 hr 30 min		1		5,25	$3^1/_2$
W-6-M-18	6"	Cored concrete masonry; see notes 12, 33, 36, 38, 41; no facings	80 psi	3 hr		1		5,25	3
W-6-M-19	$6^1/_2$"	Cored concrete masonry; see notes 12, 34, 36, 38, 41; facings: see note 35 for side 1	80 psi	4 hr		1		5,25	4
W-6-M-20	$6^1/_2$"	Cored concrete masonry; see notes 12, 33, 36, 38, 41; facings: see note 35 for side 1	80 psi	4 hr		1		5,25	4
W-6-M-21	$6^5/_8$"	Core: structural clay tile; see notes 12, 16, 20; facing: unexposed face only; see note 18	n/a	30 min		1		3,5,24	$^1/_2$
W-6-M-22	$6^5/_8$"	Core: structural clay tile; see notes 12, 17, 20; facing: unexposed face only; see note 18	n/a	40 min		1		3,5,24	$^2/_3$
W-6-M-23	$6^5/_8$"	Core: structural clay tile; see notes 12, 16, 20; facing: exposed face only; see note 18	n/a	1 hr		1		3,5,24	1
W-6-M-24	$6^5/_8$"	Core: structural clay tile; see notes 12, 17, 20; facing: exposed face only; see note 18	n/a	1 hr 5 min		1		3,5,24	1
W-6-M-25	$6^5/_8$"	Core: structural clay tile; see notes 12, 16, 19; facing: unexposed side only; see note 18	n/a	25 min		1		3,5,24	$^1/_3$
W-6-M-26	$6^5/_8$"	Core: structural clay tile; see notes 12, 7, 19; facings: on unexposed side only; see note 18	n/a	30 min		1		3,5,24	$^1/_2$
W-6-M-27	$6^5/_8$"	Core: structural clay tile; see notes 12, 16, 19; facings: on exposed side only; see note 18	n/a	1 hr		1		3,5,24	1
W-6-M-28	$6^5/_8$"	Core: structural clay tile; see notes 12, 17, 19; facings: on fire side only; see note 18	n/a	1 hr		1		3,5,24	1
W-6-M-29	$6^5/_8$"	Core: structural clay tile; see notes 13, 16, 22; facings: on unexposed side only; see note 18	n/a	1 hr		1		3,5,24	1
W-6-M-30	$6^5/_8$"	Core: structural clay tile; see notes 13, 17, 22; facings: on unexposed side only; see note 18	n/a	1 hr 15 min		1		3,5,24	$1^1/_4$
W-6-M-31	$6^5/_8$"	Core: structural clay tile; see notes 13, 16, 22; facings: on fire side only; see note 18	n/a	1 hr 15 min		1		3,5,24	$1^1/_4$
W-6-M-32	$6^5/_8$"	Core: structural clay tile; see notes 13, 17, 22; facing: on fire side only; see note 18	n/a	1 hr 30 min		1		3,5,24	$1^1/_2$

(Sheet 2 of 5)

Copyright National Fire Protection Association
Provided by IHS under license with NFPA
No reproduction or networking permitted without license from IHS
Not for Resale

Table O.4.5.3 Masonry Walls 6" (150 mm) to Less Than 8" Thick (150 mm)/(200 mm) ***(Continued)***

Item Code	Thickness	Construction Details	Performance		Reference Number			Notes	Rec Hours
			Load	Time	Pre-BMS-92	BMS-92	Post-BMS-92		
W-6-M-33	$6^5/_8$"	Core: structural clay tile; see notes 15, 16, 19; facings: on unexposed side only; see note 18	n/a	2 hr 30 min		1		3,5,24	$2^1/_2$
W-6-M-34	$6^5/_8$"	Core: structural clay tile; see notes 15, 17, 19; facings: on unexposed side only; see note 18	n/a	2 hr 30 min		1		3,5,24	$2^1/_2$
W-6-M-35	$6^5/_8$"	Core: structural clay tile; see notes 15, 16, 19; facings: on fire side only; see note 18	n/a	2 hr 30 min		1		3,5,24	$2^1/_2$
W-6-M-36	$6^5/_8$"	Core: structural clay tile; see notes 15, 17, 19; facings: on fire side only; see note 18	n/a	2 hr 30 min		1		3,5,24	$2^1/_2$
W-7-M-37	7"	Cored concrete masonry; see notes 12, 34, 36, 38, 41; see note 35 for facings on both sides	80 psi	5 hr		1		5,25	5
W-7-M-38	7"	Cored concrete masonry; see notes 12, 33, 36, 38, 41; see note 35 for facings	80 psi	5 hr		1		5,25	5
W-7-M-39	$7^1/_4$"	Core: structural clay tile; see notes 12, 16, 20; see note 18 for facings on both sides	n/a	1 hr 15 min		1		3,5,24	$1^1/_4$
W-7-M-40	$7^1/_4$"	Core: structural clay tile; see notes 12, 17, 20; see note 18 for facings on both sides	n/a	1 hr 30 min		1		3,5,24	$1^1/_2$
W-7-M-41	$7^1/_4$"	Core: structural clay tile; see notes 12, 16, 19; see note 18 for facings on both sides	n/a	1 hr 15 min		1		3,5,24	$1^1/_4$
W-7-M-42	$7^1/_4$"	Core: structural clay tile; see notes 12, 17, 19; see note 18 for facings on both sides	n/a	1 hr 30 min		1		3,5,24	$1^1/_2$
W-7-M-43	$7^1/_4$"	Core: structural clay tile; see notes 13, 16, 22; facing: on both sides of wall; see note 18	n/a	1 hr 30 min		1		3,5,24	$1^1/_2$
W-7-M-44	$7^1/_4$"	Core: structural clay tile; see notes 13, 17, 22; facings: on both sides of wall; see note 18	n/a	2 hr		1		3,5,24	2
W-7-M-45	$7^1/_4$"	Core: structural clay tile; see notes 15, 16, 19; facings: both sides; see note 18	n/a	3 hr 30 min		1		3,5,24	$3^1/_2$
W-7-M-46	$7^1/_4$"	Core: structural clay tile; see notes 15, 17, 19; facings: both sides; see note 18	n/a	3 hr 30 min		1		3,5,24	$3^1/_2$
W-6-M-47	6"	Core: 5" thick solid gypsum blocks; see note 45; facings: both sides per note 35	n/a	6 hr		1			6
W-6-M-48	6"	Core: hollow concrete units; see notes 46, 50, 54; no facings	n/a	1 hr 15 min		1			$1^1/_4$

(Sheet 3 of 5)

Copyright National Fire Protection Association
Provided by IHS under license with NFPA
No reproduction or networking permitted without license from IHS
Not for Resale

Table O.4.5.3 Masonry Walls 6" (150 mm) to Less Than 8" Thick (150 mm)/(200 mm) *(Continued)*

Item Code	Thickness	Construction Details	Performance		Reference Number			Notes	Rec Hours
			Load	Time	Pre-BMS-92	BMS-92	Post-BMS-92		
W-6-M-49	6"	Core: hollow concrete units; see notes 46, 50, 54; no facings	n/a	1 hr 30 min		1			$1^1/_2$
W-6-M-50	6"	Core: hollow concrete units; see notes 41, 46, 54; no facings	n/a	2 hr		1			2
W-6-M-51	6"	Core: hollow concrete units; see notes 46, 53, 54; no facings	n/a	3 hr		1			3
W-6-M-52	6"	Core: hollow concrete units; see notes 47, 53, 54; no facings	n/a	2 hr 30 min		1			$2^1/_2$
W-6-M-53	6"	Core: hollow concrete units; see notes 47, 51, 54; no facings	n/a	1 hr 30 min		1			$1^1/_2$
W-6-M-54	$6^1/_2$"	Core: hollow concrete units; see notes 46, 50, 54; facing: one side only per note 35	n/a	2 hr		1			2
W-6-M-55	$6^1/_2$"	Core: hollow concrete units; see notes 4, 51, 54; facings: one side per note 35	n/a	2 hr 30 min		1			$2^1/_2$
W-6-M-56	$6^1/_2$"	Core: hollow concrete units; see notes 46, 53, 54; facings: one side per note 35	n/a	4 hr		1			4
W-6-M-57	$6^1/_2$"	Core: hollow concrete units; see notes 47, 53, 54; facings: one side per note 35	n/a	3 hr		1			3
W-6-M-58	$6^1/_2$"	Core: hollow concrete units; see notes 47, 51, 54; facings: one side per note 35	n/a	2 hr		1			2
W-6-M-59	$6^1/_2$"	Core: hollow concrete units; see notes 47, 50, 54; facings: one side per note 35	n/a	1 hr 45 min		1			$1^3/_4$
W-7-M-60	7"	Core: hollow concrete units; see notes 46, 53, 54; facings: both sides per note 35	n/a	5 hr		1			5
W-7-M-61	7"	Core: hollow concrete units; see notes 46, 51, 54; facings: both sides per note 35	n/a	3 hr 30 min		1			$3^1/_2$
W-7-M-62	7"	Core: hollow concrete units; see notes 46, 50, 54; facings: both sides per note 35	n/a	2 hr 30 min		1			$2^1/_2$
W-7-M-63	7"	Core: hollow concrete units; see notes 47, 53, 54; facings: both sides per note 35	n/a	4 hr		1			4
W-7-M-64	7"	Core: hollow concrete units; see notes 47, 51, 54; facings: both sides per note 35	n/a	2 hr 30 min		1			$2^1/_2$
W-7-M-65	7"	Core: hollow concrete units; see notes 47, 50, 54; facings: both sides per note 35	n/a	2 hr		1			2

(Sheet 4 of 5)

Copyright National Fire Protection Association
Provided by IHS under license with NFPA
No reproduction or networking permitted without license from IHS
Not for Resale

Table O.4.5.3 Masonry Walls 6" (150 mm) to Less Than 8" Thick (150 mm)/(200 mm) ***(Continued)***

Item Code	Thickness	Construction Details	Performance		Reference Number			Notes	Rec Hours
			Load	Time	Pre-BMS-92	BMS-92	Post-BMS-92		
W-6-M-66	6"	Concrete wall with 4" × 4" No. 6 wire fabric (welded) near wall center for reinforcement	300 psi	2 hr 30 min			43	2	$2^1/_2$

(Sheet 5 of 5)

Notes:
1. Tested at NBS under ASA Spec. No. 42-1934 (ASTM C-19-53) except that hose stream testing where carried out was run on test specimens exposed for full test duration, not for a reduced period as is contemporarily done.
2. Failure by thermal criteria — maximum temperature rise.
3. For clay tile walls, unless the source or density of the clay can be positively identified or determined, it is suggested that the lowest hourly rating for the fire endurance of a clay tile partition of that thickness be followed. Identified sources of clay showing longer fire endurance can lead to longer time recommendations.
4. See note 55 for construction and design details for clay tile walls.
5. Tested at NBS under ASA Spec. No. A2-1934.
6. Failure mode — collapse.
7. Collapsed on removal from furnace @ 1 hour 9 minutes.
8. Hose stream — failed.
9. Hose stream — passed.
10. No end point met in test.
11. Wall collapsed at 1 hour 28 minutes.
12. One cell in wall thickness.
13. Two cells in wall thickness.
14. Double shells plus one cell in wall thickness.
15. One cell in wall thickness, cells filled with broken tile, crushed stone, slag, cinders, or sand mixed with mortar.
16. Dense hard-burned clay or shale tile.
17. Medium-burned clay tile.
18. Not less than $^5/_8$" thickness of 1:3 sanded gypsum plaster.
19. Units of not less than 30% solid material.
20. Units of not less than 40% solid material.
21. Units of not less than 50% solid material.
22. Units of not less than 45% solid material.
23. Units of not less than 60% solid material.
24. All tiles laid in portland cement-lime mortar.
25. Load — 80 psi for gross cross-sectional area of wall.
26. Three cells in wall thickness.
27. Minimum % of solid material in concrete units: 52.
28. Minimum % of solid material in concrete units: 54.
29. Minimum % of solid material in concrete units: 55.
30. Minimum % of solid material in concrete units: 57.
31. Minimum % of solid material in concrete units: 62.
32. Minimum % of solid material in concrete units: 65.
33. Minimum % of solid material in concrete units: 70.
34. Minimum % of solid material in concrete units: 76.
35. Not less than $^1/_2$" of 1:3 sanded gypsum plaster.
36. Noncombustible or no members framed into wall.
37. Combustible members framed into wall.
38. One unit in wall thickness.
39. Two units in wall thickness.
40. Three units in wall thickness.
41. Concrete units made with expanded slag or pumice aggregates.
42. Concrete units made with expanded burned clay or shale, crushed limestone, air cooled slag, or cinders.
43. Concrete units made with calcareous sand and gravel. Coarse aggregate, 60% or more calcite and dolomite.
44. Concrete units made with siliceous sand and gravel. 90% or more quartz, chert, or flint.
45. Laid in 1:3 sanded gypsum mortar.
46. Units of expanded slag or pumice aggregate.
47. Units of crushed limestone, blast furnace slag, cinders, and expanded clay or shale.
48. Units of calcareous sand and gravel. Coarse aggregate, 60% or more calcite and dolomite.
49. Units of siliceous sand and gravel. 90% or more quartz, chert, or flint.
50. Unit minimum 49% solid.
51. Unit minimum 62% solid.
52. Unit minimum 65% solid.
53. Unit minimum 73% solid.
54. Ratings based on 1 unit and 1 cell in wall section.

--`,,```,,,,````-`-`,,`,,`,`,,`---

Copyright National Fire Protection Association
Provided by IHS under license with NFPA
No reproduction or networking permitted without license from IHS Not for Resale

FIGURE O.4.5.4 Masonry Walls 8 in. (200 mm) to Less Than 10 in. (250 mm) Thick.

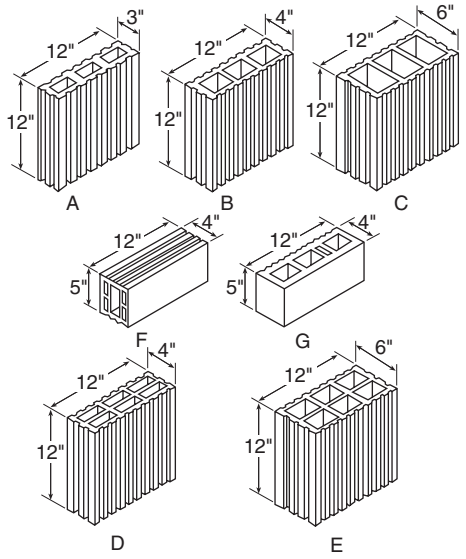

Designs of tiles used in fire-test partitions.

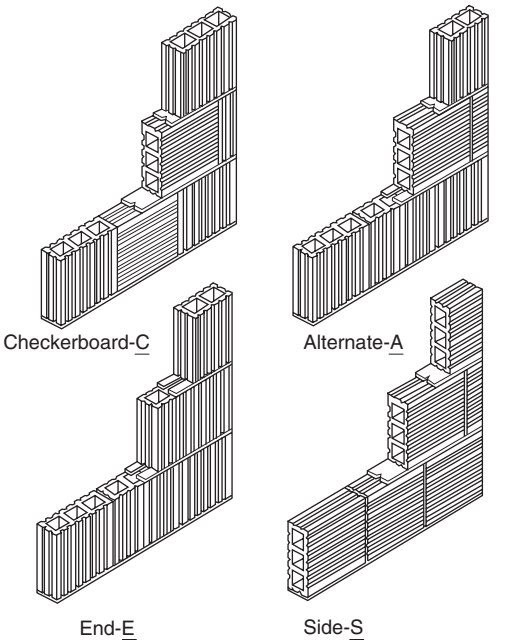

The four types of construction used in fire-test partitions.

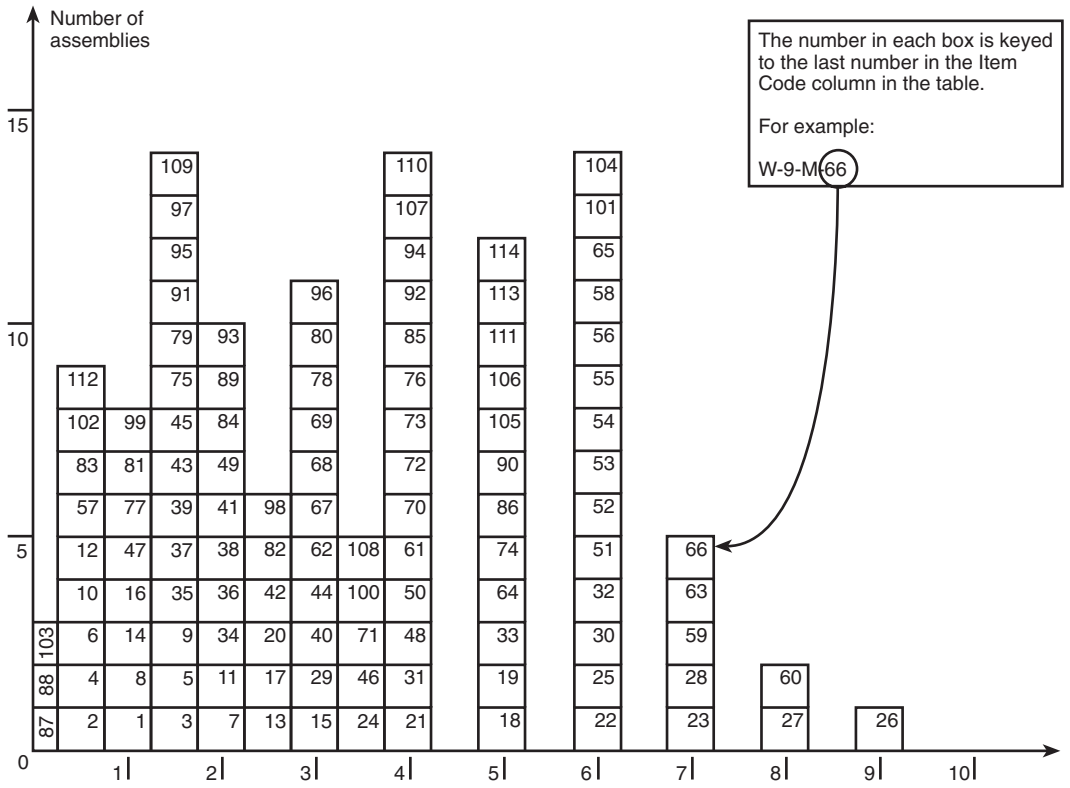

Copyright National Fire Protection Association
Provided by IHS under license with NFPA
No reproduction or networking permitted without license from IHS
Not for Resale

Table O.4.5.4 Masonry Walls 8" (200 mm) to Less Than 10" (250 mm) Thick

Item Code	Thickness	Construction Details	Performance		Reference Number			Notes	Rec Hours
			Load	Time	Pre-BMS-92	BMS-92	Post-BMS-92		
W-8-M-1	8"	Core: clay or shale structural tile; units in wall thickness: 1; cells in wall thickness: 2; minimum % solids in units: 40	80 psi	1 hr 15 min		1		1,20	$1^1/_4$
W-8-M-2	8"	Core: clay or shale structural tile; units in wall thickness: 1; cell in wall thickness: 2; minimum % solids in units: 40; facings: none; result for wall with combustible members framed into interior	80 psi	45 min		1		1,20	$^3/_4$
W-8-M-3	8"	Core: clay or shale structural tile; units in wall thickness: 1; cells in wall thickness: 2; minimum % solids in units: 43	80 psi	1 hr 30 min		1		1,20	$1^1/_2$
W-8-M-4	8"	Core: clay or shale structural tile; units in wall thickness: 1; cells in wall thickness: 2; minimum % solids in units: 43; no facings; combustible members framed into wall	80 psi	45 min		1		1,20	$^3/_4$
W-8-M-5	8"	Core: clay or shale structural tile; no facings	See notes	1 hr 30 min		1		1,2,5, 10,18, 20,21	$1^1/_2$
W-8-M-6	8"	Core: clay or shale structural tile; no facings	See notes	45 min		1		1,2,5,10, 19–21	$^3/_4$
W-8-M-7	8"	Core: clay or shale structural tile; no facings	See notes	2 hr		1		1,2,5, 13,18, 20,21	2
W-8-M-8	8"	Core: clay or shale structural tile; no facings	See notes	1 hr 15 min		1		1,2,5, 13,19, 20,21	$1^1/_4$
W-8-M-9	8"	Core: clay or shale structural tile; no facings	See notes	1 hr 45 min		1		1,2,6,9, 18,20,21	$1^3/_4$
W-8-M-10	8"	Core: clay or shale structural tile; no facings	See notes	45 min		1		1,2,6,9, 19,20,21	$^3/_4$
W-8-M-11	8"	Core: clay or shale structural tile; no facings	See notes	2 hr		1		1,2,6, 10,18, 20,21	2
W-8-M-12	8"	Core: clay or shale structural tile; no facings	See notes	45 min		1		1,2,6, 10,19, 20,21	$^3/_4$
W-8-M-13	8"	Core: clay or shale structural tile; no facings	See notes	2 hr 30 min		1		1,3,6, 12,18, 20,21	$2^1/_2$
W-8-M-14	8"	Core: clay or shale structural tile; no facings	See notes	1 hr		1		1,2,6, 12,19, 20,21	1
W-8-M-15	8"	Core: clay or shale structural tile; no facings	See notes	3 hr		1		1,2,6, 16,18, 20,21	3
W-8-M-16	8"	Core: clay or shale structural tile; no facings	See notes	1 hr 15 min		1		1,2,6, 16,19, 20,21	$1^1/_4$
W-8-M-17	8"	Units in wall thickness: 1; cells in wall thickness: 1; minimum % solids: 70; cored clay or shale brick; no facings	See notes	2 hr 30 min		1		1,44	$2^1/_2$

(Sheet 1 of 7)

Copyright National Fire Protection Association
Provided by IHS under license with NFPA
No reproduction or networking permitted without license from IHS
Not for Resale

Table O.4.5.4 Masonry Walls 8" (200 mm) to Less Than 10" (250 mm) Thick *(Continued)*

Item Code	Thickness	Construction Details	Performance		Reference Number			Notes	Rec Hours
			Load	Time	Pre-BMS-92	BMS-92	Post-BMS-92		
W-8-M-18	8"	Cored clay or shale bricks; units in wall thickness: 2; cells in wall thickness: 2; minimum % solids, 87; no facings	See notes	5 hr		1		1,45	5
W-8-M-19	8"	Core: solid clay or shale brick; no facings	See notes	5 hr		1		1,22,45	5
W-8-M-20	8"	Core: hollow rolok of clay or shale	See notes	2 hr 30 min		1		1,22,45	$2^1/_2$
W-8-M-21	8"	Core: hollow rolok bak of clay or shale; no facings	See notes	4 hr		1		1,45	4
W-8-M-22	8"	Core: concrete brick; no facings	See notes	6 hr		1		1,45	6
W-8-M-23	8"	Core: sand-lime brick; no facings	See notes	7 hr		1		1,45	7
W-8-M-24	8"	Core: 4"; 40% solid clay or shale structural tile; 1 side 4" brick facing	See notes	3 hr 30 min		1		1,20	$3^1/_2$
W-8-M-25	8"	Concrete wall (3220 psi); reinforcing vertical rods 1" from each face and 1" diameter; horizontal rod $^3/_8$" diameter	22,200 lb/ft	6 hr			7		6
W-8-M-26	8"	Core: sand-lime brick; $^1/_2$" of 1:3 sanded gypsum plaster facing on one side	See notes	9 hr		1		1,45	9
W-8-M-27	$8^1/_2$"	Core: sand-lime brick; $^1/_2$" of 1:3 sanded gypsum plaster facing on one side	See notes	8 hr		1		1,45	8
W-8-M-28	$8^1/_2$"	Core: concrete; $^1/_2$" of 1:3 sanded gypsum plaster facing on one side	See notes	7 hr		1		1,45	7
W-8-M-29	$8^1/_2$"	Core: hollow rolok of clay or shale; $^1/_2$" of 1:3 sanded gypsum plaster facing on one side	See notes	3 hr		1		1,45	3
W-8-M-30	$8^1/_2$"	Core: solid clay or shale brick; $^1/_2$" thick, 1:3 sanded gypsum plaster facing on one side	See notes	6 hr		1		1,22,45	6
W-8-M-31	$8^1/_2$"	Core: cored clay or shale brick; units in wall thickness: 1; cells in wall thickness: 1; minimum % solids: 70; $^1/_2$" of 1:3 sanded gypsum plaster facing on both sides	See notes	4 hr		1		1,44	4
W-8-M-32	$8^1/_2$"	Core: cored clay or shale brick; units in wall thickness: 2; cells in wall thickness: 2; minimum % solids: 87; $^1/_2$" of 1:3 sanded gypsum plaster facing on one side	See notes	6 hr		1		1,45	6
W-8-M-33	$8^1/_2$"	Hollow rolok bak of clay or shale core; $^1/_2$" of 1:3 sanded gypsum plaster facing on one side	See notes	5 hr		1		1,45	5
W-8-M-34	$8^1/_2$"	Core: clay or shale structural tile; units in wall thickness: 1; cells in wall thickness: 2; minimum % solids in units: 40; $^5/_8$" of 1:3 sanded gypsum plaster facing on one side	See notes	2 hr		1		1,20,21	2
W-8-M-35	$8^5/_8$"	Core: clay or shale structural tile; units in wall thickness: 1; cells in wall thickness: 2; minimum % solids in units: 40; exposed face: $^5/_8$" of 1:3 sanded gypsum plaster	See notes	1 hr 30 min		1		1,20,21	$1^1/_2$

(Sheet 2 of 7)

Copyright National Fire Protection Association
Provided by IHS under license with NFPA
No reproduction or networking permitted without license from IHS
Not for Resale

Table O.4.5.4 Masonry Walls 8" (200 mm) to Less Than 10" (250 mm) Thick *(Continued)*

Item Code	Thickness	Construction Details	Performance		Reference Number			Notes	Rec Hours
			Load	Time	Pre-BMS-92	BMS-92	Post-BMS-92		
W-8-M-36	$8^{5}/_{8}$"	Core: clay or shale structural tile; units in wall thickness: 1; cells in wall thickness: 2; minimum % solids in units: 43; $^{5}/_{8}$" of 1:3 sanded gypsum plaster facing on one side	See notes	2 hr		1		1,20,21	2
W-8-M-37	$8^{5}/_{8}$"	Core: clay or shale structural tile; units in wall thickness: 1; cells in wall thickness: 2; minimum % solids in units: 43; $^{5}/_{8}$" of 1:3 sanded gypsum plaster on the exposed face only	See notes	1 hr 30 min				1,20,21	$1^{1}/_{2}$
W-8-M-38	$8^{5}/_{8}$"	Core: clay or shale structural tile; see note 17 for facing side 1	See notes	2 hr		1		1,2,5, 10,18, 20,21	2
W-8-M-39	$8^{5}/_{8}$"	Core: clay or shale structural tile; facings: on exposed side only; see note 17	See notes	1 hr 30 min		1		1,2,5, 10,19, 20,21	$1^{1}/_{2}$
W-8-M-40	$8^{5}/_{8}$"	Core: clay or shale structural tile; facings on exposed side only; see note 17	See notes	3 hr		1		1,2,5,13, 18,20,21	3
W-8-M-41	$8^{5}/_{8}$"	Core: clay or shale structural tile; facings on exposed side only; see note 17	See notes	2 hr		1		1,2,5, 13,19, 20,21	2
W-8-M-42	$8^{5}/_{8}$"	Core: clay or shale structural tile; facings on side 1; see note 17	See notes	2 hr 30 min		1		1,2,6,9, 18,20, 21	$2^{1}/_{2}$
W-8-M-43	$8^{5}/_{8}$"	Core: clay or shale structural tile; facings on exposed side per note 17	See notes	1 hr 30 min		1		1,2,6,9, 19,20,21	$1^{1}/_{2}$
W-8-M-44	$8^{5}/_{8}$"	Core: clay or shale structural tile; facings: side 1: see note 17; side 2: none	See notes	3 hr		1		1,2,6, 10,18, 20,21	3
W-8-M-45	$8^{5}/_{8}$"	Core: clay or shale structural tile; facings on fire side only; see note 17	See notes	1 hr 30 min		1		1,2,6, 10,19, 20,21	$1^{1}/_{2}$
W-8-M-46	$8^{5}/_{8}$"	Core: clay or shale structural tile; facings: side 1: see note 17; side 2: none	See notes	3 hr 30 min		1		1,2,6, 12,18, 20,21	$3^{1}/_{2}$
W-8-M-47	$8^{5}/_{8}$"	Core: clay or shale structural tile; facings exposed side only; see note 17	See notes	1 hr 45 min		1		1,2,6, 12,19, 20,21	$1^{3}/_{4}$
W-8-M-48	$8^{5}/_{8}$"	Core: clay or shale structural tile; facings: side 1: see note 17; side 2: none	See notes	4 hr		1		1,2,6, 16,18, 20,21	4
W-8-M-49	$8^{5}/_{8}$"	Core: clay or shale structural tile; facings: fire side only; see note 17	See notes	2 hr		1		1,2,6, 16,19, 20,21	2
W-8-M-50	$8^{5}/_{8}$"	Core: 4"; 40% solid clay or shale structural tile; 4" brick plus $^{5}/_{8}$" of 1:3 sanded gypsum plaster facing on one side	See notes	4 hr		1		1,20	4
W-8-M-51	$8^{3}/_{4}$"	$8^{3}/_{4}$" × $2^{1}/_{2}$" and 4" × $2^{1}/_{2}$" cellular fletton (1873 psi) single and triple cell hollow bricks set in $^{1}/_{2}$" sand mortar in alt. courses	3.6 ton/ft	6 hr			7	23,29	6
W-8-M-52	$8^{3}/_{4}$"	$8^{3}/_{4}$" thick cement brick (2527 psi) with P.C. and sand mortar	3.6 ton/ft	6 hr			7	23,24	6

(Sheet 3 of 7)

Copyright National Fire Protection Association
Provided by IHS under license with NFPA
No reproduction or networking permitted without license from IHS
Not for Resale

Table O.4.5.4 Masonry Walls 8" (200 mm) to Less Than 10" (250 mm) Thick *(Continued)*

Item Code	Thickness	Construction Details	Performance		Reference Number			Notes	Rec Hours
			Load	Time	Pre-BMS-92	BMS-92	Post-BMS-92		
W-8-M-53	$8^3/_4$"	$8^3/_4$" × $2^1/_2$" fletton brick (1831 psi) in $^1/_2$" sand mortar	3.6 ton/ft	6 hr			7	23,24	6
W-8-M-54	$8^3/_4$"	$8^3/_4$" × $2^1/_2$" London stock brick (683 psi) in $^1/_2$" P.C. and sand mortar	7.2 ton/ft	6 hr			7	23,24	6
W-9-M-55	9"	9" × $2^1/_2$" Leicester red wire cut brick (4465 psi) in $^1/_2$" P.C. and sand mortar	6.0 ton/ft	6 hr			7	23,24	6
W-9-M-56	9"	9" × 3" sand-lime brick (2603 psi) in $^1/_2$" in P.C. sand mortar	3.6 ton/ft	6 hr			7	23,24	6
W-9-M-57	9"	2 layers $2^7/_8$ fletton brick (1910 psi) with $3^1/_4$" air space; cement and sand mortar	1.5 ton/ft	32 min			7	23,25	$^1/_3$
W-9-M-58	9"	9" × 3" stairfoot brick (7527 psi) in $^1/_2$" sand-cement mortar	7.2 ton/ft	6 hr			7	23,24	6
W-9-M-59	9"	Core: solid clay or shale bricks; $^1/_2$" thick; 1:3 sanded gypsum plaster facing on both sides	See notes	7 hr		1		1,45,22	7
W-9-M-60	9"	Core: concrete brick; $^1/_2$" of 1:3 sanded gypsum plaster facings on both sides	See notes	8 hr		1		1,45	8
W-9-M-61	9"	Core: hollow rolok of clay or shale; $^1/_2$" of 1:3 sanded gypsum plaster facings on both sides	See notes	4 hr		1		1,45	4
W-9-M-62	9"	Cored clay or shale brick; units in wall thickness: 1; cells in wall thickness: 1; minimum % solids: 70; $^1/_2$" of 1:3 sanded gypsum plaster facing on one side	See notes	3 hr		1		1,44	3
W-9-M-63	9"	Cored clay or shale bricks; units in wall thickness: 2; cells in wall thickness: 2; minimum % solids: 87; $^1/_2$" of 1:3 sanded gypsum plaster facing on both sides	See notes	7 hr		1		1,45	7
W-9-M-64	9-10"	Core: cavity wall of clay or shale brick; no facings	See notes	5 hr		1		1,45	5
W-9-M-65	9-10"	Core: cavity construction of clay or shale brick; $^1/_2$" of 1:3 sanded gypsum plaster facing on one side	See notes	6 hr		1		1,45	6
W-9-M-66	9-10"	Core: cavity construction of clay or shale brick; $^1/_2$" of 1:3 sanded gypsum plaster facing on both sides	See notes	7 hr		1		1,45	7
W-9-M-67	$9^1/_4$"	Core: clay or shale structural tile; units in wall thickness: 1; cells in wall thickness: 2; minimum % solids in units: 40; $^5/_8$" of 1:3 sanded gypsum plaster facing on both sides	See notes	3 hr		1		1,20,21	3
W-9-M-68	$9^1/_4$"	Core: clay or shale structural tile; units in wall thickness: 1; cells in wall thickness: 2; minimum % solids in units: 43; $^5/_8$" of 1:3 sanded gypsum plaster facings on both sides	See notes	3 hr		1		1,20,21	3
W-9-M-69	$9^1/_4$"	Core: clay or shale structural tile; facings: side 1 and 2 see note 17	See notes	3 hr		1		1,2,5, 10,18, 20,21	3

(Sheet 4 of 7)

Copyright National Fire Protection Association
Provided by IHS under license with NFPA
No reproduction or networking permitted without license from IHS
Not for Resale

Table O.4.5.4 Masonry Walls 8" (200 mm) to Less Than 10" (250 mm) Thick *(Continued)*

Item Code	Thickness	Construction Details	Performance		Reference Number			Notes	Rec Hours
			Load	Time	Pre-BMS-92	BMS-92	Post-BMS-92		
W-9-M-70	$9^1/_4$"	Core: clay or shale structural tile; facings: side 1 and 2 see note 17	See notes	4 hr		1		1,2,5, 13,18, 20,21	4
W-9-M-71	$9^1/_4$"	Core: clay or shale structural tile; facings: side 1 and 2 see note 17	See notes	3 hr 30 min		1		1,2,6,9, 18,20, 21	$3^1/_2$
W-9-M-72	$9^1/_4$"	Core: clay or shale structural tile; facings: side 1 and 2 see note 17	See notes	4 hr		1		1,2,6, 10,18, 20,21	4
W-9-M-73	$9^1/_4$"	Core: clay or shale structural tile; facings: side 1 and 2 see note 17	See notes	4 hr		1		1,2,6, 12,18, 20,21	4
W-9-M-74	$9^1/_4$"	Core: clay or shale structural tile; facings: side 1 and 2 see note 17	See notes	5 hr		1		1,2,6, 16,18, 20,21	5
W-8-M-75	8"	Cored concrete masonry; see notes 2, 19, 26, 34, 40; no facings	80 psi	1 hr 30 min		1		1,20	$1^1/_2$
W-8-M-76	8"	Cored concrete masonry; see notes 2, 18, 26, 34, 40; no facings	80 psi	4 hr		1		1,20	4
W-8-M-77	8"	Cored concrete masonry; see notes 2, 19, 26, 31, 40; no facings	80 psi	1 hr 15 min		1		1,20	$1^1/_4$
W-8-M-78	8"	Cored concrete masonry; see notes 2, 18, 26, 31, 40; no facings	80 psi	3 hr		1		1,20	3
W-8-M-79	8"	Cored concrete masonry; see notes 2, 19, 26, 36, 41; no facings	80 psi	1 hr 30 min		1		1,20	$1^1/_2$
W-8-M-80	8"	Cored concrete masonry; see notes 2, 18, 26, 36, 41; no facings	80 psi	3 hr		1		1,20	3
W-8-M-81	8"	Cored concrete masonry; see notes 2, 19, 26, 34, 41; no facings	80 psi	1 hr		1		1,20	1
W-8-M-82	8"	Cored concrete masonry; see notes 2, 18, 26, 34, 41; no facings	80 psi	2 hr 30 min		1		1,20	$2^1/_2$
W-8-M-83	8"	Cored concrete masonry; see notes 2, 19, 26, 29, 41; no facings	80 psi	45 min		1		1,20	$^3/_4$
W-8-M-84	8"	Cored concrete masonry; see notes 2, 18, 26, 29, 41; no facings	80 psi	2 hr		1		1,20	2
W-8-M-85	$8^1/_2$"	Cored concrete masonry; see notes 3, 18, 26, 34, 41; facings: $2^1/_2$" brick	80 psi	4 hr		1		1,20	4
W-8-M-86	8"	Cored concrete masonry; see notes 3, 18, 26, 34, 41; facings: $3^3/_4$" brick face	80 psi	5 hr		1		1,20	5
W-8-M-87	8"	Cored concrete masonry; see notes 2, 19, 26, 30, 43; no facings	80 psi	12 min		1		1,20	$^1/_5$
W-8-M-88	8"	Cored concrete masonry; see notes 2, 18, 26, 30, 43; no facings	80 psi	12 min		1		1,20	$^1/_5$
W-8-M-89	$8^1/_2$"	Cored concrete masonry; see notes 2, 19, 26, 34, 40; facings: on fire side only; see note 38	80 psi	2 hr		1		1,20	2
W-8-M-90	$8^1/_2$"	Cored concrete masonry; see notes 2, 18, 26, 34, 40; facings: see note 38 for side 1	80 psi	5 hr		1		1,20	5
W-8-M-91	$8^1/_2$"	Cored concrete masonry; see notes 2, 19, 26, 31, 40; facings on fire side only; see note 38	80 psi	1 hr 45 min		1		1,20	$1^3/_4$

(Sheet 5 of 7)

Copyright National Fire Protection Association
Provided by IHS under license with NFPA
No reproduction or networking permitted without license from IHS
Not for Resale

Table O.4.5.4 Masonry Walls 8" (200 mm) to Less Than 10" (250 mm) Thick *(Continued)*

Item Code	Thickness	Construction Details	Performance		Reference Number			Notes	Rec Hours
			Load	Time	Pre-BMS-92	BMS-92	Post-BMS-92		
W-8-M-92	$8^1/_2$"	Cored concrete masonry; see notes 2, 18, 26, 31, 40; facings on one side; see note 38	80 psi	4 hr		1		1,20	4
W-8-M-93	$8^1/_2$"	Cored concrete masonry; see notes 2, 19, 26, 36, 41; facings on fire side only; see note 38	80 psi	2 hr		1		1,20	2
W-8-M-94	$8^1/_2$"	Cored concrete masonry; see notes 2, 18, 26, 36, 41; facings on fire side only; see note 38	80 psi	4 hr		1		1,20	4
W-8-M-95	$8^1/_2$"	Cored concrete masonry; see notes 2, 19, 26, 34, 41; facings on fire side only; see note 38	80 psi	1 hr 30 min		1		1,20	$1^1/_2$
W-8-M-96	$8^1/_2$"	Cored concrete masonry; see notes 2, 18, 26, 34, 41; facings on one side; see note 38	80 psi	3 hr		1		1,20	3
W-8-M-97	$8^1/_2$"	Cored concrete masonry; see notes 2, 19, 26, 29, 41; facings on fire side only; see note 38	80 psi	1 hr 30 min		1		1,20	$1^1/_2$
W-8-M-98	$8^1/_2$"	Cored concrete masonry; see notes 2, 18, 26, 29, 41; facings on one side; see note 38	80 psi	2 hr 30 min		1		1,20	$2^1/_2$
W-8-M-99	$8^1/_2$"	Cored concrete masonry; see notes 3, 19, 23, 27, 41; no facings	80 psi	1 hr 15 min		1		1,20	$1^1/_4$
W-8-M-100	$8^1/_2$"	Cored concrete masonry; see notes 3, 18, 23, 27, 41; no facings	80 psi	3 hr 30 min		1		1,20	$3^1/_2$
W-8-M-101	$8^1/_2$"	Cored concrete masonry; see notes 3, 18, 26, 34, 41; facings $3^3/_4$" brick face; one side only; see note 38	80 psi	6 hr		1		1,20	6
W-8-M-102	$8^1/_2$"	Cored concrete masonry; see notes 2, 19, 26, 30, 43; facings on fire side only; see note 38	80 psi	30 min		1		1,20	$^1/_2$
W-8-M-103	$8^1/_2$"	Cored concrete masonry; see notes 2, 18, 26, 30, 43; facings on one side only; see note 38	80 psi	12 min		1		1,20	$^1/_5$
W-9-M-104	9"	Cored concrete masonry; see notes 2, 18, 26, 34, 40; facings on both sides; see note 38	80 psi	6 hr		1		1,20	6
W-9-M-105	9"	Cored concrete masonry; see notes 2, 18, 26, 31, 40; facings on both sides; see note 38	80 psi	5 hr		1		1,20	5
W-9-M-106	9"	Cored concrete masonry; see notes 2, 18, 26, 36, 41; facings on both sides of wall; see note 38	80 psi	5 hr		1		1,20	5
W-9-M-107	9"	Cored concrete masonry; see notes 2, 18, 26, 34, 40; facings on both sides; see note 38	80 psi	4 hr		1		1,20	4
W-9-M-108	9"	Cored concrete masonry; see notes 2, 18, 26, 29, 41; facings on both sides; see note 38	80 psi	3 hr 30 min		1		1,20	$3^1/_2$
W-9-M-109	9"	Cored concrete masonry; see notes 3, 19, 23, 27, 40; facing on fire side only; see note 38	80 psi	1 hr 45 min		1		1,20	$1^3/_4$
W-9-M-110	9"	Cored concrete masonry; see notes 3, 18, 27, 23, 41; facings on one side only; see note 38	80 psi	4 hr		1		1,20	4

(Sheet 6 of 7)

Copyright National Fire Protection Association
Provided by IHS under license with NFPA
No reproduction or networking permitted without license from IHS
Not for Resale

Table O.4.5.4 Masonry Walls 8" (200 mm) to Less Than 10" (250 mm) Thick *(Continued)*

Item Code	Thickness	Construction Details	Performance		Reference Number			Notes	Rec Hours
			Load	Time	Pre-BMS-92	BMS-92	Post-BMS-92		
W-9-M-111	9"	Cored concrete masonry; see notes 3, 18, 26, 34, 41; $2^1/_2$" brick face on one side only; see note 38	80 psi	5 hr		1		1,20	5
W-8-M-112	9"	Cored concrete masonry; see notes 2, 18, 26, 30, 43; facings on both sides; see note 38	80 psi	30 min		1		1,20	$^1/_2$
W-9-M-113	$9^1/_2$"	Cored concrete masonry; see notes 3, 18, 23, 27, 41; facings on both sides; see note 38	80 psi	5 hr		1		1,20	5
W-8-M-114	8"		200 psi	5 hr			43	22	5

(Sheet 7 of 7)

Notes:
1. Tested at NBS under ASA Spec. No. 42-1934 (ASTM C-19-53).
2. One unit in wall thickness.
3. Two units in wall thickness.
4. Two or three units in wall thickness.
5. Two cells in wall thickness.
6. Three or four cells in wall thickness.
7. Four or five cells in wall thickness.
8. Five or six cells in wall thickness.
9. Minimum % of solid materials in units: 40%.
10. Minimum % of solid materials in units: 43%.
11. Minimum % of solid materials in units: 46%.
12. Minimum % of solid materials in units: 48%.
13. Minimum % of solid materials in units: 49%.
14. Minimum % of solid materials in units: 45%.
15. Minimum % of solid materials in units: 51%.
16. Minimum % of solid materials in units: 53%.
17. Not less than $^5/_8$" thickness of 1:3 sanded gypsum plaster.
18. Noncombustible or no members framed into wall.
19. Combustible members framed into wall.
20. Load: 80 psi for gross cross sectional area of wall.
21. Portland cement — lime mortar.
22. Failure mode — thermal.
23. British test.
24. Passed all criteria.
25. Failed by sudden collapse with no preceding signs of impending failure.
26. One cell in wall thickness.
27. Two cells in wall thickness.
28. Three cells in wall thickness.
29. Minimum % of solid material in concrete units: 52.
30. Minimum % of solid material in concrete units: 54.
31. Minimum % of solid material in concrete units: 55.
32. Minimum % of solid material in concrete units: 57.
33. Minimum % of solid material in concrete units: 60.
34. Minimum % of solid material in concrete units: 62.
35. Minimum % of solid material in concrete units: 65.
36. Minimum % of solid material in concrete units: 70.
37. Minimum % of solid material in concrete units: 76.
38. Not less than $^1/_2$" of 1:3 sanded gypsum plaster.
39. Three units in wall thickness.
40. Concrete units made with expanded slag or pumice aggregates.
41. Concrete units made with expanded burned clay or shale, crushed limestone, air cooled slag, or cinders.
42. Concrete units made with calcareous sand and gravel. Coarse aggregate, 60% or more calcite and dolomite.
43. Concrete units made with siliceous sand and gravel. 90% or more quartz, chert, and dolomite.
44. Load: 120 psi for gross cross-sectional area of wall.
45. Load: 160 psi for gross cross-sectional area of wall.

Copyright National Fire Protection Association
Provided by IHS under license with NFPA
No reproduction or networking permitted without license from IHS
Not for Resale

FIGURE O.4.5.5 Masonry Walls 10 in. (250 mm) to Less Than 12 in. (300 mm) Thick.

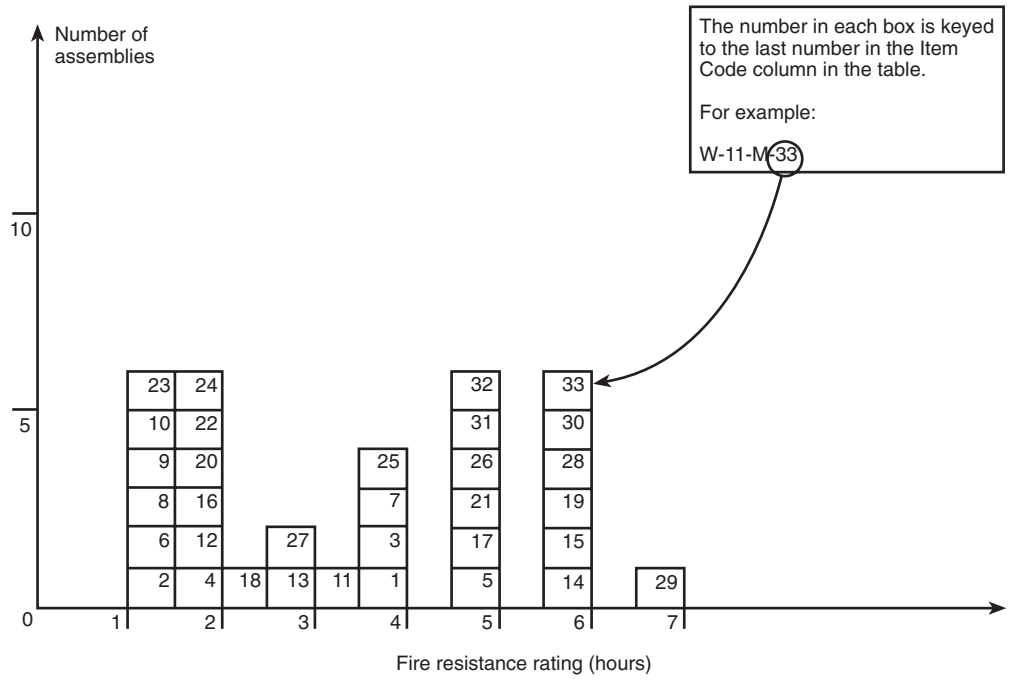

Table O.4.5.5 Masonry Walls 10" (250 mm) to Less Than 12" (300 mm) Thick

Item Code	Thickness	Construction Details	Performance		Reference Number			Notes	Rec Hours
			Load	Time	Pre-BMS-92	BMS-92	Post-BMS-92		
W-10-M-1	10"	Core: two, $3^{3}/_{4}$", 40% solid clay or shale structural tiles with 2" air space between; facings: $^{3}/_{4}$" portland cement plaster or stucco on both sides	80 psi	4 hr		1		1,20	4
W-10-M-2	10"	Cored concrete masonry, 2" air cavity; see notes 3, 19, 27, 34, 40; facings: none	80 psi	1 hr 30 min		1		1,20	$1^{1}/_{2}$
W-10-M-3	10"	Cored concrete masonry; see notes 3, 18, 27, 34, 40; facings: none	80 psi	4 hr		1		1,20	4
W-10-M-4	10"	Cored concrete masonry; see notes 2, 19, 26, 33, 40; facings: none	80 psi	2 hr		1		1,20	2
W-10-M-5	10"	Cored concrete masonry; see notes 2, 18, 26, 33, 40; no facings	80 psi	5 hr		1		1,20	5
W-10-M-6	10"	Cored concrete masonry; see notes 2, 19, 26, 33, 41; no facings	80 psi	1 hr 30 min		1		1,20	$1^{1}/_{2}$
W-10-M-7	10"	Cored concrete masonry; see notes 2, 18, 26, 33, 41; no facings	80 psi	4 hr		1		1,20	4

(Sheet 1 of 4)

Copyright National Fire Protection Association
Provided by IHS under license with NFPA
No reproduction or networking permitted without license from IHS
Not for Resale

Table O.4.5.5 Masonry Walls 10" (250 mm) to Less Than 12" (300 mm) Thick *(Continued)*

Item Code	Thickness	Construction Details	Performance		Reference Number			Notes	Rec Hours
			Load	Time	Pre-BMS-92	BMS-92	Post-BMS-92		
W-10-M-8	10"	Cored concrete masonry (cavity type 2" air space); see notes 3, 19, 27, 34, 42; no facings	80 psi	1 hr 15 min		1		1,20	$1^1/_4$
W-10-M-9	10"	Cored concrete masonry (cavity type 2" air space); see notes 3, 27, 34, 42; no facings	80 psi	1 hr 15 min		1		1,20	$1^1/_4$
W-10-M-10	10"	Cored concrete masonry (cavity type 2" air space); see notes 3, 19, 27, 34, 41; no facings	80 psi	1 hr 15 min		1		1,20	$1^1/_4$
W-10-M-11	10"	Cored concrete masonry (cavity type 2" air space); see notes 3, 18, 27, 34, 41; no facings	80 psi	3 hr 30 min		1		1,20	$3^1/_2$
W-10-M-12	10"	9" thick concrete block ($11^3/_4$" × 9" × $4^1/_4$") with 2 – 2" thick voids included; $^3/_8$" P.C. plaster, $^1/_8$" neat gypsum	n/a	1 hr 53 min			7	23,24	$1^3/_4$
W-10-M-13	10"	Hollow clay tile block wall — 8 $^1/_2$" block with 2 – 3" voids in each $8^1/_2$" section; $^3/_4$" gypsum plaster — each face	n/a	2 hr 42 min			7	23,25	$2^1/_2$
W-10-M-14	10"	2 layers $4^1/_4$" brick with $1^1/_2$" air space — no ties sand cement mortar (fletton brick — 1910 psi)	n/a	6 hr			7	23,24	6
W-10-M-15	10"	2 layers $4^1/_4$" thick fletton brick (1910 psi brick); $1^1/_2$" air space; ties — 18" O.C. — vertical; 3' O.C. — horizontal	n/a	6 hr			7	23,24	6
W-10-M-16	$10^1/_2$"	Cored concrete masonry; 2" air cavity; see notes 3, 19, 27, 34, 40; facings: fire side only; see note 38	80 psi	2 hr		1		1,20	2
W-10-M-17	$10^1/_2$"	Cored concrete masonry; see notes 3, 18, 27, 34, 40; facings: only side one; see note 38	80 psi	5 hr		1		1,20	5
W-10-M-18	$10^1/_2$"	Cored concrete masonry; see notes 2, 19, 26, 33, 40; facings on fire side only; see note 38	80 psi	2 hr 30 min		1		1,20	$2^1/_2$
W-10-M-19	$10^1/_2$"	Cored concrete masonry; see notes 2, 18, 26, 33, 40; facings on one side; see note 38	80 psi	6 hr		1		1,20	6
W-10-M-20	$10^1/_2$"	Cored concrete masonry; see notes 2, 19, 26, 33, 41; facings on fire side of wall only; see note 38	80 psi	2 hr		1		1,20	2

(Sheet 2 of 4)

Copyright National Fire Protection Association
Provided by IHS under license with NFPA
No reproduction or networking permitted without license from IHS
Not for Resale

Table O.4.5.5 Masonry Walls 10" (250 mm) to Less Than 12" (300 mm) Thick *(Continued)*

Item Code	Thickness	Construction Details	Performance		Reference Number			Notes	Rec Hours
			Load	Time	Pre-BMS-92	BMS-92	Post-BMS-92		
W-10-M-21	$10^1/_2$"	Cored concrete masonry; see notes 2, 18, 26, 33, 41; facings on one side only; see note 38	80 psi	5 hr		1		1,20	5
W-10-M-22	$10^1/_2$"	Cored concrete masonry (cavity type 2" air space); see notes 3, 19, 27, 34, 42; facing on fire side only; see note 38	80 psi	1 hr 45 min		1		1,20	$1^3/_4$
W-10-M-23	$10^1/_2$"	Cored concrete masonry (cavity type 2" air space); see notes 3, 18, 27, 34, 42; facings on one side only; see note 38	80 psi	1 hr 15 min		1		1,20	$1^1/_4$
W-10-M-24	$10^1/_2$"	Cored concrete masonry (cavity type 2" air space); see notes 3, 19, 27, 34, 41; facings on fire side only; see note 38	80 psi	2 hr		1		1,20	2
W-10-M-25	$10^1/_2$"	Cored concrete masonry (cavity type 2" air space); see notes 3, 18, 27, 34, 41; facings on one side only; see note 38	80 psi	4 hr		1		1,20	4
W-10-M-26	$10^5/_8$"	Core: 8", 40% solid tile plus 2" furring tile; $^5/_8$" sanded gypsum plaster between tile types; facings on both sides $^3/_4$" portland cement plaster or stucco	80 psi	5 hr		1		1,20	5
W-10-M-27	$10^5/_8$"	Core: 8", 40% solid tile plus 2" furring tile; $^5/_8$" sanded gypsum plaster between tile types; facings on one side $^3/_4$" portland cement plaster or stucco	80 psi	3 hr 30 min		1		1,20	$3^1/_2$
W-11-M-28	11"	Cored concrete masonry; see notes 3, 18, 27, 34, 40; facings on both sides; see note 38	80 psi	6 hr		1		1,20	6
W-11-M-29	11"	Cored concrete masonry; see notes 2, 18, 26, 33, 40; facings on both sides; see note 38	80 psi	7 hr		1		1,20	7
W-11-M-30	11"	Cored concrete masonry; see notes 2, 18, 26, 33, 41; facings on both sides of wall; see note 38	80 psi	6 hr		1		1,20	6
W-11-M-31	11"	Cored concrete masonry (cavity type 2" air space); see notes 3, 18, 27, 34, 42; facings on both sides; see note 38	80 psi	5 hr		1		1,20	5

(Sheet 3 of 4)

Copyright National Fire Protection Association
Provided by IHS under license with NFPA
No reproduction or networking permitted without license from IHS
Not for Resale

Table O.4.5.5 Masonry Walls 10" (250 mm) to Less Than 12" (300 mm) Thick *(Continued)*

Item Code	Thickness	Construction Details	Performance		Reference Number			Notes	Rec Hours
			Load	Time	Pre-BMS-92	BMS-92	Post-BMS-92		
W-11-M-32	11"	Cored concrete masonry (cavity type 2" air space); see notes 3, 18, 27, 34, 41; facings on both sides; see note 38	80 psi	5 hr		1		1,20	5
W-11-M-33	11"	2 layers brick ($4^1/_2$" fletton 2428 psi) 2" air space; galv. ties — 18" O.C. — horizontal; 3′ O.C. — vertical	3 ton/ft	6 hr			7	23,24	6

(Sheet 4 of 4)

Notes:
1. Tested at NBS under ASA Spec. A2-1934.
2. One unit in wall thickness.
3. Two units in wall thickness.
4. Two or three units in wall thickness.
5. Two cells in wall thickness.
6. Three or four cells in wall thickness.
7. Four or five cells in wall thickness.
8. Five or six cells in wall thickness.
9. Minimum % of solid materials in units: 40%.
10. Minimum % of solid materials in units: 43%.
11. Minimum % of solid materials in units: 46%.
12. Minimum % of solid materials in units: 48%.
13. Minimum % of solid materials in units: 49%.
14. Minimum % of solid materials in units: 45%.
15. Minimum % of solid materials in units: 51%.
16. Minimum % of solid materials in units: 53%.
17. Not less than $^5/_8$" thickness of 1:3 sanded gypsum plaster.
18. Noncombustible or no members framed into wall.
19. Combustible members framed into wall.
20. Load: 80 psi for gross cross-sectional area.
21. Portland cement — lime mortar.
22. Failure mode — thermal.
23. British test.
24. Passed all criteria.
25. Failed by sudden collapse with no preceding signs of impending failure.
26. One cell in wall thickness.
27. Two cells in wall thickness.
28. Three cells in wall thickness.
29. Minimum % of solid material in concrete units: 52%.
30. Minimum % of solid material in concrete units: 54%.
31. Minimum % of solid material in concrete units: 55%.
32. Minimum % of solid material in concrete units: 57%.
33. Minimum % of solid material in concrete units: 60%.
34. Minimum % of solid material in concrete units: 62%.
35. Minimum % of solid material in concrete units: 65%.
36. Minimum % of solid material in concrete units: 70%.
37. Minimum % of solid material in concrete units: 76%.
38. Not less than $^1/_2$" of 1:3 sanded gypsum plaster.
39. Three units in wall thickness.
40. Concrete units made with expanded slag or pumice aggregates.
41. Concrete units made with expanded burned clay or shale, crushed limestone, air cooled slag, or cinders.
42. Concrete units made with calcareous sand and gravel. Coarse aggregate, 60% or more calcite and dolomite.

Copyright National Fire Protection Association
Provided by IHS under license with NFPA
No reproduction or networking permitted without license from IHS
Not for Resale

FIGURE O.4.5.6 Masonry Walls 12 in. (300 mm) to Less Than 14 in. (350 mm) Thick.

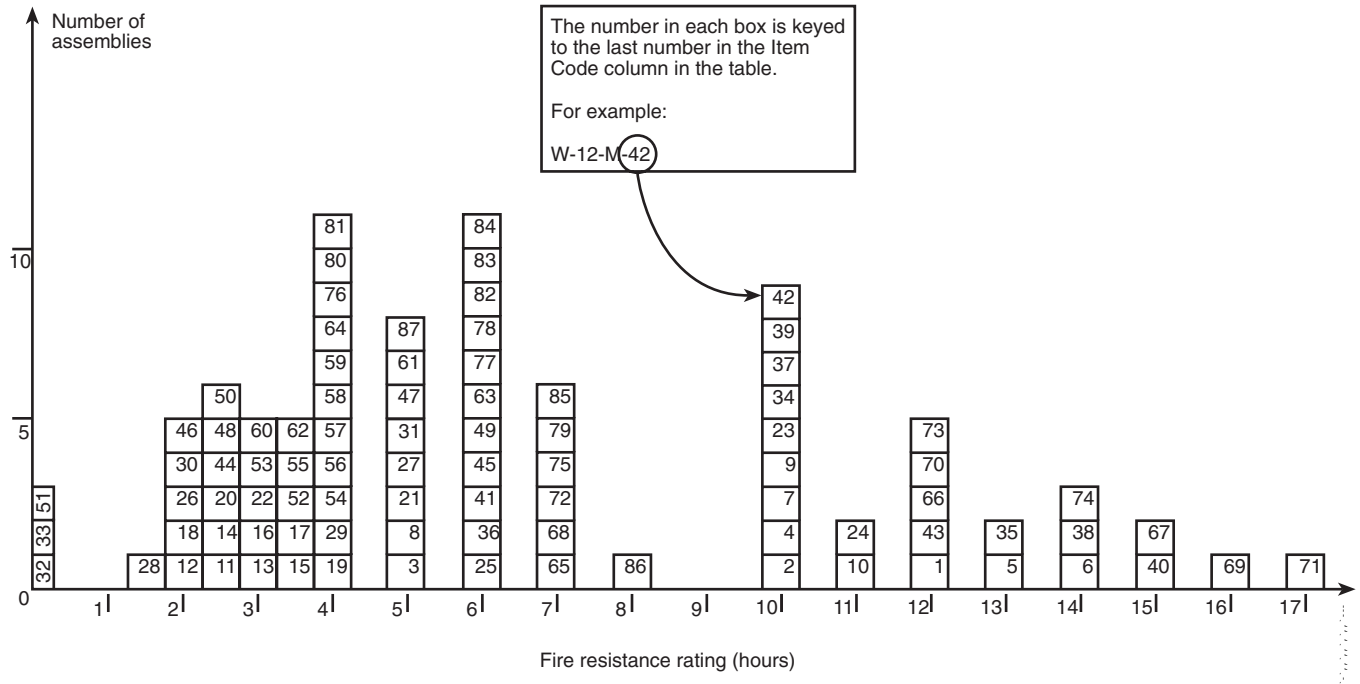

Table O.4.5.6 Masonry Walls 12" (300 mm) to Less Than 14" (350 mm) Thick

Item Code	Thickness	Construction Details	Performance		Reference Number			Notes	Rec Hours
			Load	Time	Pre-BMS-92	BMS-92	Post-BMS-92		
W-12-M-1	12"	Core: solid clay or shale brick; no facings	n/a	12 hr		1		1	12
W-12-M-2	12"	Core: solid clay or shale brick; no facings	160 psi	10 hr		1		1,44	10
W-12-M-3	12"	Core: hollow rolok of clay or shale; no facings	160 psi	5 hr		1		1,44	5
W-12-M-4	12"	Core: hollow rolok bak of clay or shale; no facings	160 psi	10 hr		1		1,44	10
W-12-M-5	12"	Core: concrete brick; no facings	160 psi	13 hr		1		1,44	13
W-12-M-6	12"	Core: sand-lime brick; no facings	n/a	14 hr		1		1	14
W-12-M-7	12"	Core: sand-lime brick; no facings	160 psi	10 hr		1		1,44	10
W-12-M-8	12"	Cored clay or shale bricks; units in wall thickness: 1; cells in wall thickness: 2; minimum % solids: 70; no facings	120 psi	5 hr		1		1,45	5
W-12-M-9	12"	Cored clay or shale bricks; units in wall thickness: 3; cells in wall thickness: 3; minimum % solids: 87; no facings	160 psi	10 hr		1		1,44	10
W-12-M-10	12"	Cored clay or shale bricks; units in wall thickness: 3; cells in wall thickness: 3; minimum % solids: 87; no facings	n/a	11 hr		1		1	11
W-12-M-11	12"	Core: clay or shale structural tile; see notes 2, 6, 9, 18; no facings	80 psi	$2^1/_2$ hr		1		1,20	$2^1/_2$

(Sheet 1 of 6)

Copyright National Fire Protection Association
Provided by IHS under license with NFPA
No reproduction or networking permitted without license from IHS
Not for Resale

Table O.4.5.6 Masonry Walls 12" (300 mm) to Less Than 14" (350 mm) Thick *(Continued)*

Item Code	Thickness	Construction Details	Performance		Reference Number			Notes	Rec Hours
			Load	Time	Pre-BMS-92	BMS-92	Post-BMS-92		
W-12-M-12	12"	Core: clay or shale structural tile; see notes 2, 4, 9, 19; no facings	80 psi	2 hr		1		1,20	2
W-12-M-13	12"	Core: clay or shale structural tile; see notes 2, 6, 14, 19; no facings	80 psi	3 hr		1		1,20	3
W-12-M-14	12"	Core: clay or shale structural tile; see notes 2, 6, 14, 18; no facings	80 psi	$2^1/_2$ hr		1		1,20	$2^1/_2$
W-12-M-15	12"	Core: clay or shale structural tile; see notes 2, 4, 13, 18; no facings	80 psi	$3^1/_2$ hr		1		1,20	$3^1/_2$
W-12-M-16	12"	Core: clay or shale structural tile; see notes 2, 4, 13, 19; no facings	80 psi	3 hr		1		1,20	3
W-12-M-17	12"	Core: clay or shale structural tile; see notes 3, 6, 9, 18; no facings	80 psi	$3^1/_2$ hr		1		1,20	$3^1/_2$
W-12-M-18	12"	Core: clay or shale structural tile; see notes 3, 6, 9, 19; no facings	80 psi	2 hr		1		1,20	2
W-12-M-19	12"	Core: clay or shale structural tile; see notes 3, 6, 14, 18; no facings	80 psi	4 hr		1		1,20	4
W-12-M-20	12"	Core: clay or shale structural tile; see notes 3, 6, 14, 19; no facings	80 psi	$2^1/_2$ hr		1		1,20	$2^1/_2$
W-12-M-21	12"	Core: clay or shale structural tile; see notes 3, 6, 16, 18; no facings	80 psi	5 hr		1		1,20	5
W-12-M-22	12"	Core: clay or shale structural tile; see notes 3, 6, 16, 19; no facings	80 psi	3 hr		1		1,20	3
W-12-M-23	12"	Core: 8", 70% solid clay or shale structural tile; 4" brick facing on one side	80 psi	10 hr		1		1,20	10
W-12-M-24	12"	Core: 8", 70% solid clay or shale structural tile; 4" brick facing on one side	n/a	11 hr		1		1	11
W-12-M-25	12"	Core: 8", 40% solid clay or shale structural tile; 4" brick facing on one side	80 psi	6 hr		1		1,20	6
W-12-M-26	12"	Cored concrete masonry; see notes 1, 9, 15, 16, 20; no facings	80 psi	2 hr		1		1,20	2
W-12-M-27	12"	Cored concrete masonry; see notes 2, 18, 26, 34, 41; no facings	80 psi	5 hr		1		1,20	5
W-12-M-28	12"	Cored concrete masonry; see notes 2, 19, 26, 31, 41; no facings	80 psi	$1^1/_2$ hr		1		1,20	$1^1/_2$
W-12-M-29	12"	Cored concrete masonry; see notes 2, 18, 26, 31, 41; no facings	80 psi	4 hr		1		1,20	4
W-12-M-30	12"	Cored concrete masonry; see notes 3, 19, 27, 31, 43; no facings	80 psi	2 hr		1		1,20	2

(Sheet 2 of 6)

Copyright National Fire Protection Association
Provided by IHS under license with NFPA
No reproduction or networking permitted without license from IHS
Not for Resale

Table O.4.5.6 Masonry Walls 12" (300 mm) to Less Than 14" (350 mm) Thick *(Continued)*

Item Code	Thickness	Construction Details	Performance		Reference Number			Notes	Rec Hours
			Load	Time	Pre-BMS-92	BMS-92	Post-BMS-92		
W-12-M-31	12"	Cored concrete masonry; see notes 3, 18, 27, 31, 43; no facings	80 psi	5 hr		1		1,20	5
W-12-M-32	12"	Cored concrete masonry; see notes 2, 19, 26, 32, 43; no facings	80 psi	25 min		1		1,20	1/3
W-12-M-33	12"	Cored concrete masonry; see notes 2, 18, 26, 32, 43; no facings	80 psi	25 min		1		1,20	1/3
W-12-M-34	12 1/2"	Core: solid clay or shale brick; 1/2" of 1:3 sanded gypsum plaster facing on one side	160 psi	10 hr		1		1,44	10
W-12-M-35	12 1/2"	Core: solid clay or shale brick; 1/2" of 1:3 sanded gypsum plaster facing on one side	n/a	13 hr		1		1	13
W-12-M-36	12 1/2"	Core: hollow rolok of clay or shale; 1/2" of 1:3 sanded gypsum plaster facing on one side	160 psi	6 hr		1		1,44	6
W-12-M-37	12 1/2"	Core: hollow rolok bak of clay or shale; 1/2" of 1:3 sanded gypsum plaster facing on one side	160 psi	10 hr		1		1,44	10
W-12-M-38	12 1/2"	Core: concrete; 1/2" of 1:3 sanded gypsum plaster facing on one side	160 psi	14 hr		1		1,44	14
W-12-M-39	12 1/2"	Core: sand-lime brick; 1/2" of 1:3 sanded gypsum plaster facing on one side	160 psi	10 hr		1		1,44	10
W-12-M-40	12 1/2"	Core: sand-lime brick; 1/2" of 1:3 sanded gypsum plaster facing on one side	n/a	15 hr		1		1	15
W-12-M-41	12 1/2"	Units in wall thickness: 1; cells in wall thickness: 2; minimum % solids: 70; cored clay or shale brick; 1/2" of 1:3 sanded gypsum plaster facing on one side	120 psi	6 hr		1		1,45	6
W-12-M-42	12 1/2"	Cored clay or shale bricks; units in wall thickness: 3; cells in wall thickness: 3; minimum % solids: 87; 1/2" of 1:3 sanded gypsum plaster facings on one side	160 psi	10 hr		1		1,44	10
W-12-M-43	12 1/2"	Cored clay or shale bricks; units in wall thickness: 3; cells in wall thickness: 3; minimum % solids: 87; 1/2" of 1:3 sanded gypsum plaster facing on one side	n/a	12 hr		1		1	12
W-12-M-44	12 1/2"	Cored concrete masonry; see notes 2, 19, 26, 34, 41; facing on fire side only; see note 38	80 psi	2 1/2 hr		1		1,20	2 1/2
W-12-M-45	12 1/2"	Cored concrete masonry; see notes 2, 18, 26, 34, 39, 41; facing on one side only; see note 38	80 psi	6 hr		1		1,20	6
W-12-M-46	12 1/2"	Cored concrete masonry; see notes 2, 19, 26, 34, 41; facing on fire side only; see note 38	80 psi	2 hr		1		1,20	2
W-12-M-47	12 1/2"	Cored concrete masonry; see notes 2, 18, 26, 31, 41; facings one side of wall only; see note 38	80 psi	5 hr		1		1,20	5

(Sheet 3 of 6)

Copyright National Fire Protection Association
Provided by IHS under license with NFPA
No reproduction or networking permitted without license from IHS
Not for Resale

Table O.4.5.6 Masonry Walls 12" (300 mm) to Less Than 14" (350 mm) Thick *(Continued)*

Item Code	Thickness	Construction Details	Performance		Reference Number			Notes	Rec Hours
			Load	Time	Pre-BMS-92	BMS-92	Post-BMS-92		
W-12-M-48	$12^1/_2$"	Cored concrete masonry; see notes 3, 19, 27, 31, 43; facing on fire side only; see note 38	80 psi	$2^1/_2$ hr		1		1,20	$2^1/_2$
W-12-M-49	$12^1/_2$"	Cored concrete masonry; see notes 3, 18, 27, 31, 43; facing one side only; see note 38	80 psi	6 hr		1		1,20	6
W-12-M-50	$12^1/_2$"	Cored concrete masonry; see notes 2, 19, 26, 32, 43; facing on fire side only; see note 38	80 psi	$2^1/_2$ hr		1		1,20	$2^1/_2$
W-12-M-51	$12^1/_2$"	Cored concrete masonry; see notes 2, 18, 26, 32, 43; facing one side only; see note 38	80 psi	25 min		1		1,20	$^1/_3$
W-12-M-52	$12^5/_8$"	Clay or shale structural tile; see notes 2, 6, 9, 18; facing: side 1 see note 17; side 2 none	80 psi	$3^1/_2$ hr		1		1,20	$3^1/_2$
W-12-M-53	$12^5/_8$"	Clay or shale structural tile; see notes 2, 6, 9, 19; facing on fire side only; see note 17	80 psi	3 hr		1		1,20	3
W-12-M-54	$12^5/_8$"	Clay or shale structural tile; see notes 2, 6, 14, 19; facing: side 1 see note 17; side 2 none	80 psi	4 hr		1		1,20	4
W-12-M-55	$12^5/_8$"	Clay or shale structural tile; see notes 2, 6, 14, 18; facings on exposed side only; see note 17	80 psi	$3^1/_2$ hr		1		1,20	$3^1/_2$
W-12-M-56	$12^5/_8$"	Clay or shale structural tile; see notes 2, 4, 13, 18; facings: side 1 see note 17; side 2 none	80 psi	4 hr		1		1,20	4
W-12-M-57	$12^5/_8$"	Clay or shale structural tile; see notes 1, 4, 13, 19; facings on fire side only; see note 17	80 psi	4 hr		1		1,20	4
W-12-M-58	$12^5/_8$"	Clay or shale structural tile; see notes 3, 6, 9, 18; facings: side 1 see note 17; side 2 none	80 psi	4 hr		1		1,20	4
W-12-M-59	$12^5/_8$"	Clay or shale structural tile; see notes 3, 6, 9, 19; facings on fire side only; see note 17	80 psi	3 hr		1		1,20	3
W-12-M-60	$12^5/_8$"	Clay or shale structural tile; see notes 3, 6, 14, 18; facings: side 1 see note 17; side 2 none	80 psi	5 hr		1		1,20	5
W-12-M-61	$12^5/_8$"	Clay or shale structural tile; see notes 3, 6, 14, 19; facings: fire side only; see note 17	80 psi	3 hr 30 min		1		1,20	$3^1/_2$
W-12-M-62	$12^5/_8$	Clay or shale structural tile; see notes 3, 6, 16, 18; facings: side 1 see note 17; side 2 none	80 psi	6 hr		1		1,20	6
W-12-M-63	$12^5/_8$"	Clay or shale structural tile; see notes 3, 6, 16, 19; facing fire side only; see note 17	80 psi	4 hr		1		1,20	4
W-12-M-64	$12^5/_8$"	Core: 8", 40% solid clay or shale structural tile; facings 4" brick plus $^5/_8$" of 1:3 sanded gypsum plaster on one side	80 psi	7 hr		1		1,20	7
W-13-M-65	13"	Core: solid clay or shale brick; $^1/_2$" of 1:3 sanded gypsum plaster facing on both sides	160 psi	12 hr		1		1,44	12
W-13-M-66	13"	Core: solid clay or shale brick; $^1/_2$" of 1:3 sanded gypsum plaster facing on both sides	n/a	15 hr		1		1,20	15

(Sheet 4 of 6)

Copyright National Fire Protection Association
Provided by IHS under license with NFPA
No reproduction or networking permitted without license from IHS
Not for Resale

Table O.4.5.6 Masonry Walls 12" (300 mm) to Less Than 14" (350 mm) Thick *(Continued)*

Item Code	Thickness	Construction Details	Performance		Reference Number			Notes	Rec Hours
			Load	Time	Pre-BMS-92	BMS-92	Post-BMS-92		
W-13-M-67	13"	Core: solid clay or shale brick; $^1/_2$" of 1:3 sanded gypsum plaster facings on both sides	n/a	15 hr		1		1	15
W-13-M-68	13"	Core: hollow rolok of clay or shale; $^1/_2$" of 1:3 sanded gypsum plaster facings on both sides	80 psi	7 hr		1		1,20	7
W-13-M-69	13"	Core: concrete brick; $^1/_2$" of 1:3 sanded gypsum plaster facings on both sides	160 psi	16 hr		1		1,44	16
W-13-M-70	13"	Core: sand-lime brick; $^1/_2$" of 1:3 sanded gypsum plaster facings on both sides	160 psi	12 hr		1		1,44	12
W-13-M-71	13"	Core: sand-lime brick; $^1/_2$" of 1:3 sanded gypsum plaster facings on both sides	n/a	17 hr		1		1	17
W-13-M-72	13"	Cored clay or shale bricks; units in wall thickness: 1; cells in wall thickness: 2; minimum % solids: 70; $^1/_2$" of 1:3 sanded gypsum plaster facings on both sides	120 psi	7 hr		1		1,45	7
W-13-M-73	13"	Cored clay or shale bricks; units in wall thickness: 3; cells in wall thickness: 3; minimum % solids: 87; $^1/_2$" of 1:3 sanded gypsum plaster facings on both sides	160 psi	12 hr		1		1,44	12
W-13-M-74	13"	Cored clay or shale bricks; units in wall thickness: 3; cells in wall thickness: 2; minimum % solids: 87; $^1/_2$" of 1:3 sanded gypsum plaster facings on both sides	n/a	14 hr		1		1	14
W-13-M-75	13"	Cored concrete masonry; see notes 18, 23, 28, 39, 41; no facings	80 psi	7 hr		1		1,20	7
W-13-M-76	13"	Cored concrete masonry; see notes 19, 23, 28, 39, 41; no facings	80 psi	4 hr		1		1,20	4
W-13-M-77	13"	Cored concrete masonry; see notes 3, 18, 27, 31, 43; facings on both sides; see note 38	80 psi	6 hr		1		1,20	6
W-13-M-78	13"	Cored concrete masonry; see notes 2, 18, 26, 31, 41; facings on both sides; see note 38	80 psi	6 hr		1		1,20	6
W-13-M-79	13"	Cored concrete masonry; see notes 2, 18, 26, 34, 41; facings on both sides of wall; see note 38	80 psi	7 hr		1		1,20	7
W-13-M-80	13$^1/_4$"	Core: clay or shale structural tile: see notes 2, 6, 9, 18; facings: see note 17 for both sides	80 psi	4 hr		1		1,20	4
W-13-M-81	13$^1/_4$"	Core: clay or shale structural tile; see notes 2, 6, 14, 19; facings: see note 17 for both sides	80 psi	4 hr		1		1,20	4
W-13-M-82	13$^1/_4$"	Core: clay or shale structural tile; see notes 2, 4, 13, 18; facings: see note 17 for both sides	80 psi	6 hr		1		1,20	6

(Sheet 5 of 6)

--`,,```,,,,````-`-`,,`,,`,`,,`---

Copyright National Fire Protection Association
Provided by IHS under license with NFPA
No reproduction or networking permitted without license from IHS
Not for Resale

Table O.4.5.6 Masonry Walls 12" (300 mm) to Less Than 14" (350 mm) Thick *(Continued)*

Item Code	Thickness	Construction Details	Performance		Reference Number			Notes	Rec Hours
			Load	Time	Pre-BMS-92	BMS-92	Post-BMS-92		
W-13-M-83	$13^1/_4$"	Core: clay or shale structural tile; see notes 3, 6, 9, 18; facings: see note 17 for both sides	80 psi	6 hr		1		1,20	6
W-13-M-84	$13^1/_4$"	Core: clay or shale structural tile; see notes 3, 6, 14, 18; facings: see note 17 for both sides	80 psi	6 hr		1		1,20	6
W-13-M-85	$13^1/_4$"	Core: clay or shale structural tile; see notes 3, 6, 16, 18; facings: see note 17 for both sides	80 psi	7 hr		1		1,20	7
W-13-M-86	$13^1/_2$"	Cored concrete masonry; see notes 18, 23, 28, 39, 41; facing on one side only; see note 38	80 psi	8 hr		1		1,20	8
W-13-M-87	$13^1/_2$"	Cored concrete masonry; see notes 19, 23, 28, 39, 41; facing on fire side only; see note 38	80 psi	5 hr		1		1,20	5

(Sheet 6 of 6)

Notes:
1. Tested at NBS under ASA Spec. A2-1934.
2. One unit in wall thickness.
3. Two units in wall thickness.
4. Two or three units in wall thickness.
5. Two cells in wall thickness.
6. Three or four cells in wall thickness.
7. Four or five cells in wall thickness.
8. Five or six cells in wall thickness.
9. Minimum % of solid materials in units: 40%.
10. Minimum % of solid materials in units: 43%.
11. Minimum % of solid materials in units: 46%.
12. Minimum % of solid materials in units: 48%.
13. Minimum % of solid materials in units: 49%.
14. Minimum % of solid materials in units: 45%.
15. Minimum % of solid materials in units: 51%.
16. Minimum % of solid materials in units: 53%.
17. Not less than $^5/_8$" thickness of 1:3 sanded gypsum plaster.
18. Noncombustible or no members framed into wall.
19. Combustible members framed into wall.
20. Load: 80 psi for gross area.
21. Portland cement — lime mortar.
22. Failure mode — thermal.
23. British test.
24. Passed all criteria.
25. Failed by sudden collapse with no preceding signs of impending failure.
26. One cell in wall thickness.
27. Two cells in wall thickness.
28. Three cells in wall thickness.
29. Minimum % of solid material in concrete units: 52%.
30. Minimum % of solid material in concrete units: 54%.
31. Minimum % of solid material in concrete units: 55%.
32. Minimum % of solid material in concrete units: 57%.
33. Minimum % of solid material in concrete units: 60%.
34. Minimum % of solid material in concrete units: 62%.
35. Minimum % of solid material in concrete units: 65%.
36. Minimum % of solid material in concrete units: 70%.
37. Minimum % of solid material in concrete units: 76%.
38. Not less than $^1/_2$" of 1:3 sanded gypsum plaster.
39. Three units in wall thickness.
40. Concrete units made with expanded slag or pumice aggregates.
41. Concrete units made with expanded burned clay or shale, crushed limestone, air cooled slag, or cinders.
42. Concrete units made with calcareous sand and gravel. Coarse aggregate, 60% or more calcite and dolomite.
43. Concrete units made with siliceous sand and gravel. 90% or more quartz, chert, or flint.
44. Load: 160 psi of gross wall cross-sectional area.
45. Load: 120 psi of gross wall cross-sectional area.

--`,,```,,,,````-`-`,,`,,`,`,,`---

Copyright National Fire Protection Association
Provided by IHS under license with NFPA
No reproduction or networking permitted without license from IHS
Not for Resale

FIGURE O.4.5.7 Masonry Walls 14 in. (350 mm) or More Thick.

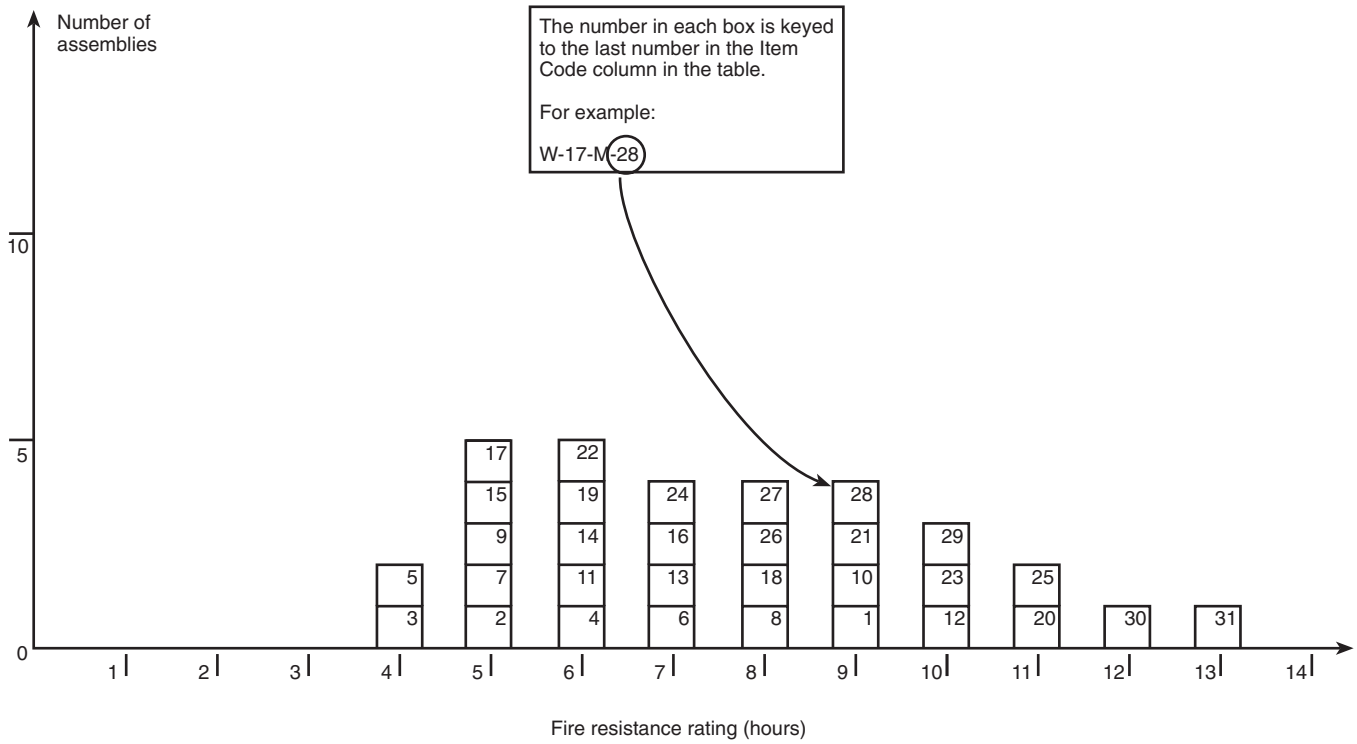

Table O.4.5.7 Masonry Walls 14" (350 mm) or More Thick

Item Code	Thickness	Construction Details	Performance		Reference Number			Notes	Rec Hours
			Load	Time	Pre-BMS-92	BMS-92	Post-BMS-92		
W-14-M-1	14"	Core: cored concrete masonry; see notes 18, 28, 35, 39, 41; facings: both sides, see note 38	80 psi	9 hr		1		1,20	9
W-16-M-2	16"	Core: clay or shale structural tile; see notes 4, 7, 9, 19; no facings	80 psi	5 hr		1		1,20	5
W-16-M-3	16"	Core: clay or shale structural tile; see notes 4, 7, 9, 19; no facings	80 psi	4 hr		1		1,20	4
W-16-M-4	16"	Core: clay or shale structural tile; see notes 4, 7, 10, 18; no facings	80 psi	6 hr		1		1,20	6
W-16-M-5	16"	Core: clay or shale structural tile; see notes 4, 7, 10, 19; no facings	80 psi	4 hr		1		1,20	4
W-16-M-6	16"	Core: clay or shale structural tile; see notes 4, 7, 11, 18; no facings	80 psi	7 hr		1		1,20	7
W-16-M-7	16"	Core: clay or shale structural tile; see notes 4, 7, 11, 19; no facings	80 psi	5 hr		1		1,20	5
W-16-M-8	16"	Core: clay or shale structural tile; see notes 4, 8, 13, 18; no facings	80 psi	8 hr		1		1,20	8
W-16-M-9	16"	Core: clay or shale structural tile; see notes 4, 8, 13, 19; no facings	80 psi	5 hr		1		1,20	5

(Sheet 1 of 3)

Copyright National Fire Protection Association
Provided by IHS under license with NFPA
No reproduction or networking permitted without license from IHS
Not for Resale

Table O.4.5.7 Masonry Walls 14" (350 mm) or More Thick ***(Continued)***

Item Code	Thickness	Construction Details	Performance		Reference Number			Notes	Rec Hours
			Load	Time	Pre-BMS-92	BMS-92	Post-BMS-92		
W-16-M-10	16"	Clay or shale structural tile core; see notes 4, 8, 15, 18; no facings	80 psi	9 hr		1		1,20	9
W-16-M-11	16"	Clay or shale structural tile core; see notes 3, 7, 14, 18; no facings	80 psi	6 hr		1		1,20	6
W-16-M-12	16"	Clay or shale structural tile core; see notes 4, 8, 16, 18; no facings	80 psi	10 hr		1		1,20	10
W-16-M-13	16"	Clay or shale structural tile core; see notes 4, 6, 16, 19; no facings	80 psi	7 hr		1		1,20	7
W-16-M-14	$16^{5}/_{8}$"	Clay or shale structural tile core; see notes 4, 7, 9, 18; facings: side 1 see note 17; side 2 none	80 psi	6 hr		1		1,20	6
W-16-M-15	$16^{5}/_{8}$"	Clay or shale structural tile core; see notes 4, 7, 9, 19; facings: fire side only; see note 17	80 psi	5 hr		1		1,20	5
W-16-M-16	$16^{5}/_{8}$"	Clay or shale structural tile core; see notes 4, 7, 10, 18; facings: side 1 see note 17; side 2 none	80 psi	7 hr		1		1,20	7
W-16-M-17	$16^{5}/_{8}$"	Clay or shale structural tile core; see notes 4, 7, 10, 19; facings: fire side only; see note 17	80 psi	5 hr		1		1,20	5
W-16-M-18	$16^{5}/_{8}$"	Clay or shale structural tile core; see notes 4, 7, 11, 18; facings: side 1 see note 17; side 2 none	80 psi	8 hr		1		1,20	8
W-16-M-19	$16^{5}/_{8}$"	Clay or shale structural tile core; see notes 4, 7, 11, 19; facings: fire side only; see note 17	80 psi	6 hr		1		1,20	6
W-16-M-20	$16^{5}/_{8}$"	Clay or shale structural tile core; see notes 4, 8, 13, 18; facings: side 1 see note 17; side 2 same as side 1	80 psi	11 hr		1		1,20	11
W-16-M-21	$16^{5}/_{8}$"	Clay or shale structural tile core; see notes 4, 8, 13, 18; facings: side 1 see note 17; side 2 none	80 psi	9 hr		1		1,20	9
W-16-M-22	$16^{5}/_{8}$"	Clay or shale structural tile core; see notes 4, 8, 13, 19; facings: fire side only; see note 17	80 psi	6 hr		1		1,20	6
W-16-M-23	$16^{5}/_{8}$"	Clay or shale structural tile core; see notes 4, 8, 15, 18; facings: side 1 see note 17; side 2 none	80 psi	10 hr		1		1,20	10
W-16-M-24	$16^{5}/_{8}$"	Clay or shale structural tile core; see notes 4, 8, 15, 19; facings: fire side only; see note 17	80 psi	7 hr		1		1,20	7
W-16-M-25	$16^{5}/_{8}$"	Clay or shale structural tile core; see notes 4, 6, 16, 18; facings: side 1 see note 17; side 2 none	80 psi	11 hr		1		1,20	11
W-16-M-26	$16^{5}/_{8}$"	Clay or shale structural tile core; see notes 4, 6, 16, 19; facings: fire side only; see note 17	80 psi	8 hr		1		1,20	8

(Sheet 2 of 3)

Copyright National Fire Protection Association
Provided by IHS under license with NFPA
No reproduction or networking permitted without license from IHS
Not for Resale

Table O.4.5.7 Masonry Walls 14" (350 mm) or More Thick ***(Continued)***

Item Code	Thickness	Construction Details	Performance		Reference Number			Notes	Rec Hours
			Load	Time	Pre-BMS-92	BMS-92	Post-BMS-92		
W-17-M-27	$17^1/_4$"	Clay or shale structural tile core; see notes 4, 7, 9, 18; facings: side 1 and 2 see note 17	80 psi	8 hr		1		1,20	8
W-17-M-28	$17^1/_4$"	Clay or shale structural tile core; see notes 4, 7, 10, 18; facings: side 1 and 2 see note 17	80 psi	9 hr		1		1,20	9
W-17-M-29	$17^1/_4$"	Clay or shale structural tile core; see notes 4, 7, 11, 18; facings: side 1 and 2 see note 17	80 psi	10 hr		1		1,20	10
W-17-M-30	$17^1/_4$"	Clay or shale structural tile core; see notes 4, 8, 15, 18; facings: side 1 and 2 see note 17	80 psi	12 hr		1		1,20	12
W-17-M-31	$17^1/_4$"	Clay or shale structural tile core; see notes 4, 6, 16, 18; facings: side 1 and 2: see note 17	80 psi	13 hr		1		1,20	13

(Sheet 3 of 3)

Notes:
1. Tested at NBS under ASA Spec. A2-1934.
2. One unit in wall thickness.
3. Two units in wall thickness.
4. Two or three units in wall thickness.
5. Two cells in wall thickness.
6. Three or four cells in wall thickness.
7. Four or five cells in wall thickness.
8. Five or six cells in wall thickness.
9. Minimum % of solid materials in units: 40%.
10. Minimum % of solid materials in units: 43%.
11. Minimum % of solid materials in units: 46%.
12. Minimum % of solid materials in units: 48%.
13. Minimum % of solid materials in units: 49%.
14. Minimum % of solid materials in units: 45%.
15. Minimum % of solid materials in units: 51%.
16. Minimum % of solid materials in units: 53%.
17. Not less than $^5/_8$" thickness of 1:3 sanded gypsum plaster.
18. Noncombustible or no members framed into wall.
19. Combustible members framed into wall.
20. Load: 80 psi for gross area.
21. Portland cement — lime mortar.
22. Failure mode — thermal.
23. British test.
24. Passed all criteria.
25. Failed by sudden collapse with no preceding signs of impending failure.
26. One cell in wall thickness.
27. Two cells in wall thickness.
28. Three cells in wall thickness.
29. Minimum % of solid material in concrete units: 52%.
30. Minimum % of solid material in concrete units: 54%.
31. Minimum % of solid material in concrete units: 55%.
32. Minimum % of solid material in concrete units: 57%.
33. Minimum % of solid material in concrete units: 60%.
34. Minimum % of solid material in concrete units: 62%.
35. Minimum % of solid material in concrete units: 65%.
36. Minimum % of solid material in concrete units: 70%.
37. Minimum % of solid material in concrete units: 76%.
38. Not less than $^1/_2$" of 1:3 sanded gypsum plaster.
39. Three units in wall thickness.
40. Concrete units made with expanded slag or pumice aggregates.
41. Concrete units made with expanded burned clay or shale, crushed limestone, air cooled slag or cinders.
42. Concrete units made with calcareous sand and gravel. Coarse aggregate, 60% or more calcite and dolomite.
43. Concrete units made with siliceous sand and gravel. 90% or more quartz, chert, or flint.

--`,,```,,,,````-`-`,,`,,`,`,,`---
Copyright National Fire Protection Association
Provided by IHS under license with NFPA
No reproduction or networking permitted without license from IHS
Not for Resale

FIGURE O.4.5.8 Metal Frame Walls 0 in. (0 mm) to Less Than 4 in. (100 mm) Thick.

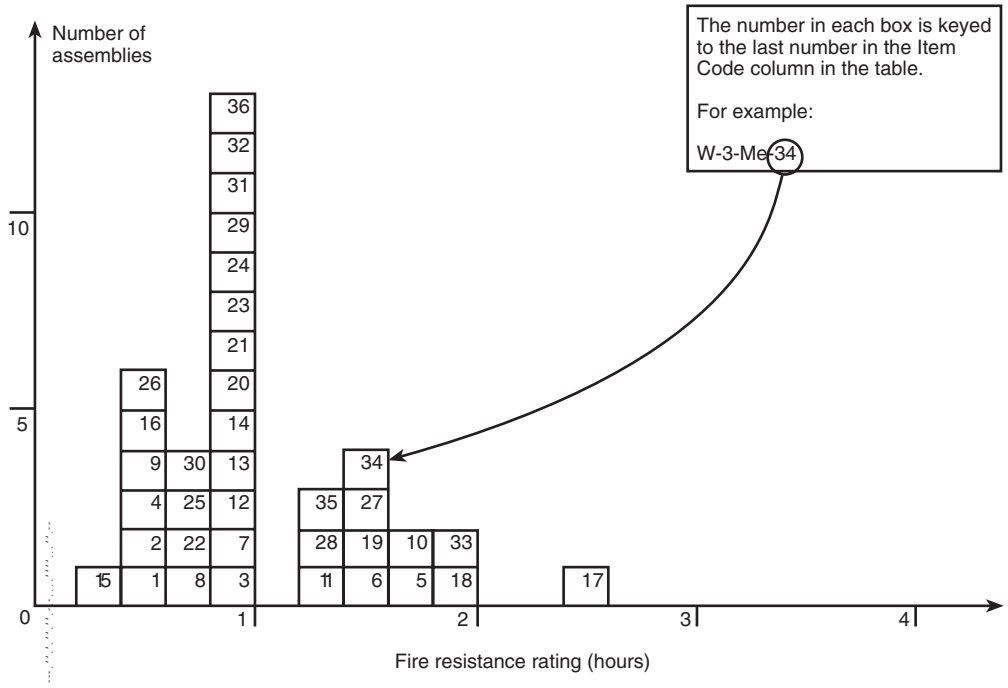

Table O.4.5.8 Metal Frame Walls 0" (0 mm) to Less Than 4" (100 mm) Thick

Item Code	Thickness	Construction Details	Performance		Reference Number			Notes	Rec Hours
			Load	Time	Pre-BMS-92	BMS-92	Post-BMS-92		
W-3-Me-1	3"	Core: steel channels having 3 rows of 4" × 1/8" staggered slots in web; core filled with heat expanded vermiculite weighing 15 lb/ft² of wall area; facings: side 1and 2—18 gauge steel, spot welded to core	n/a	25 min		1			1/3
W-3-Me-2	3"	Core: steel channels having 3 rows of 4" × 1/8" staggered slots in web; core filled with heat expanded vermiculite weighing 2 lb/ft² of wall area; facings: side 1 and 2—18 gauge steel, spot welded to core	n/a	30 min		1			1/2
W-2-Me-3	2 1/2"	Solid partition 3/8" tension rods (vertical) 3' O.C. with metal lath; scratch coat—cement/sand/lime plaster; float coats—cement/sand/lime plaster; finish coats—neat gypsum plaster	n/a	1 hr			7	1	1
W-2-Me-4	2"	Solid wall: steel channel per note 1, 2" thickness of 1:2, 1:3 portland cement on metal lath	n/a	30 min		1			1/2
W-2-Me-5	2"	Solid wall: steel channel per note 1, 2" thickness of neat gypsum plaster on metal lath	n/a	1 hr 45 min		1			1 3/4
W-2-Me-6	2"	Solid wall: steel channel per note 1, 2" thickness of 1: 1/2, 1: 1/2 gypsum plaster on metal lath	n/a	1 hr 30 min		1			1 1/2

(Sheet 1 of 3)

Copyright National Fire Protection Association
Provided by IHS under license with NFPA
No reproduction or networking permitted without license from IHS
Not for Resale

Table O.4.5.8 Metal Frame Walls 0" (0 mm) to Less Than 4" (100 mm) Thick *(Continued)*

Item Code	Thickness	Construction Details	Performance		Reference Number			Notes	Rec Hours
			Load	Time	Pre-BMS-92	BMS-92	Post-BMS-92		
W-2-Me-7	2"	Solid wall: steel channel per note 2, 2" thickness of 1:1, 1:1 gypsum plaster on metal lath	n/a	1 hr		1			1
W-2-Me-8	2"	Solid wall: steel channel per note 1, 2" thickness of 1:2, 1:2 gypsum plaster on metal lath	n/a	45 min		1			$^3/_4$
W-2-Me-9	$2^1/_4$"	Solid wall: steel channel per note 2, $2^1/_4$" thickness of 1:2, 1:3 portland cement on metal lath	n/a	30 min		1			$^1/_2$
W-2-Me-10	$2^1/_4$"	Solid wall: steel channel per note 2, $2^1/_4$" thickness of neat gypsum plaster on metal lath	n/a	2 hr		1			2
W-2-Me-11	$2^1/_4$"	Solid wall: steel channel per note 2, $2^1/_4$" thickness of 1: $^1/_2$, 1:$^1/_2$ gypsum plaster on metal lath	n/a	1 hr 45 min		1			$1^3/_4$
W-2-Me-12	$2^1/_4$"	Solid wall: steel channel per note 2, $2^1/_4$" thickness of 1:1, 1:1 gypsum plaster on metal lath	n/a	1 hr 15 min		1			$1^1/_4$
W-2-Me-13	$2^1/_4$"	Solid wall: steel channel per note 2, $2^1/_4$" thickness of 1:2, 1:2 gypsum plaster on metal lath	n/a	1 hr		1			1
W-2-Me-14	$2^1/_2$"	Solid wall: steel channel per note 1, $2^1/_2$" thickness of 4.5:1:7, 4.5:1:7 portland cement, sawdust, and sand sprayed on wire mesh (see note 3 for wire mesh)	n/a	1 hr		1			1
W-2-Me-15	$2^1/_2$"	Solid wall: steel channel per note 2, $2^1/_2$" thickness of 1:4, 1:4 portland cement spray on wire mesh (per note 3)	n/a	20 min		1			$^1/_3$
W-2-Me-16	$2^1/_2$"	Solid wall: steel channel per note 2, $2^1/_2$" thickness of 1:2, 1:3 portland cement on metal lath	n/a	30 min		1			$^1/_2$
W-2-Me-17	$2^1/_2$"	Solid wall: steel channel per note 2, $2^1/_2$" thickness of neat gypsum plaster on metal lath	n/a	2 hr 30 min		1			$2^1/_2$
W-2-Me-18	$2^1/_2$"	Solid wall: steel channel per note 2, $2^1/_2$" thickness of 1: $^1/_2$, 1:$^1/_2$ gypsum plaster on metal lath	n/a	2 hr		1			2
W-2-Me-19	$2^1/_2$"	Solid wall: steel channel per note 2, $2^1/_2$" thickness of 1:1, 1:1 gypsum plaster on metal lath	n/a	1 hr 30 min		1			$1^1/_2$
W-2-Me-20	$2^1/_2$"	Solid wall: steel channel per note 2, $2^1/_2$" thickness of 1:2, 1:2 gypsum plaster on metal lath	n/a	1 hr		1			1
W-2-Me-21	$2^1/_2$"	Solid wall: steel channel per note 2, $2^1/_2$" thickness of 1:2, 1:3 gypsum plaster on metal lath	n/a	1 hr		1			1
W-3-Me-22	3"	Core: steel channels per note 2, 1:2, 1:2 gypsum plaster on $^3/_4$" soft asbestos lath, plaster thickness 2"	n/a	45 min		1			$^3/_4$
W-3-Me-23	$3^1/_2$"	Solid wall: steel channel per note 2, $2^1/_2$" thickness of 1:2, 1:2 gypsum plaster on $^3/_4$" asbestos lath	n/a	1 hr		1			1

(Sheet 2 of 3)

--`,,```,,,,````-`-`,,`,,`,`,,`---
Copyright National Fire Protection Association
Provided by IHS under license with NFPA
No reproduction or networking permitted without license from IHS
Not for Resale

Table O.4.5.8 Metal Frame Walls 0" (0 mm) to Less Than 4" (100 mm) Thick ***(Continued)***

Item Code	Thickness	Construction Details	Performance		Reference Number			Notes	Rec Hours
			Load	Time	Pre-BMS-92	BMS-92	Post-BMS-92		
W-3-Me-24	$3^1/_2$"	Solid wall: steel channel per note 2, lath over and 1:2 $^1/_2$, 1:2 $^1/_2$ gypsum plaster on 1" magnesium oxysulfate wood fiberboard, plaster thickness $2^1/_2$"	n/a	1 hr		1			1
W-3-Me-25	$3^1/_2$"	Core: steel studs, note 4; facings $^3/_4$" thickness of 1:1/30:2, 1:1/30:3 portland cement and asbestos fiber plaster	n/a	45 min		1			$^3/_4$
W-3-Me-26	$3^1/_2$"	Core: steel studs, note 4; facings: both sides $^3/_4$" thickness of 1:2, 1:3 portland cement	n/a	30 min		1			$^1/_2$
W-3-Me-27	$3^1/_2$"	Core: steel studs per note 4; facings: both sides $^3/_4$" thickness of neat gypsum plaster	n/a	1 hr 30 min		1			$1^1/_2$
W-3-Me-28	$3^1/_2$"	Core: steel studs per note 4; facings: both sides $^3/_4$" thickness of 1: $^1/_2$, 1:$^1/_2$ gypsum plaster	n/a	1 hr 15 min		1			$1^1/_4$
W-3-Me-29	$3^1/_2$"	Core: steel studs, note 4; facings: both sides $^3/_4$" thickness of 1:2, 1:2 gypsum plaster	n/a	1 hr		1			1
W-3-Me-30	$3^1/_2$"	Core: steel studs, note 4; facings: both sides $^3/_4$" thickness of 1:2, 1:3 gypsum plaster	n/a	45 min		1			$^3/_4$
W-3-Me-31	$3^3/_4$"	Core: steel studs, note 4; facings: both sides $^7/_8$" thickness of 1: 1/30:2, 1:1/30:3 portland cement and asbestos fiber plaster	n/a	1 hr		1			1
W-3-Me-32	$3^3/_4$"	Core: steel studs, note 4; facings: both sides $^7/_8$" thickness of 1:2, 1:3 portland cement	n/a	45 min		1			$^3/_4$
W-3-Me-33	$3^3/_4$"	Core: steel studs, note 4; facings: both sides $^7/_8$" thickness of neat gypsum plaster	n/a	2 hr		1			2
W-3-Me-34	$3^3/_4$"	Core: steel studs per note 4; facings: both sides $^7/_8$" thickness of 1: $^1/_2$, 1:$^1/_2$ gypsum plaster	n/a	1 hr 30 min		1			$1^1/_2$
W-3-Me-35	$3^3/_4$"	Core: steel studs per note 4; facings: both sides $^7/_8$" thickness of 1:2, 1:2 gypsum plaster	n/a	1 hr 15 min		1			$1^1/_4$
W-3-Me-36	$3^3/_4$"	Core: steel per note 4; facings: $^7/_8$" thickness of 1:2, 1:3 gypsum plaster on both sides	n/a	1 hr		1			1

(Sheet 3 of 3)

Notes:
1. Failure mode — local temperature rise — back face.
2. $^3/_4$" or 1" channel framing — hot-rolled or strip-steel channels.
3. Reinforcement is 4" square mesh of No. 6 wire welded at intersections (no channels).
4. Ratings are for any usual type of non-load-bearing metal framing providing 2" (or more) air space.

General Note:
The construction details of the wall assemblies are as complete as the source documentation will permit. Data on the method of attachment of facings and the gauge of steel studs was provided when known. The cross-sectional area of the steel stud can be computed, thereby permitting a reasoned estimate of actual loading conditions. For load-bearing assemblies, the maximum allowable stress for the steel studs has been provided in the table "Notes." More often, it is the thermal properties of the facing materials, rather than the specific gauge of the steel, that will determine the degree of fire resistance. This is particularly true for non-bearing wall assemblies.

Copyright National Fire Protection Association
Provided by IHS under license with NFPA
No reproduction or networking permitted without license from IHS
Not for Resale

FIGURE O.4.5.9 Metal Frame Walls 4 in. (100 mm) to Less Than 6 in. (150 mm) Thick.

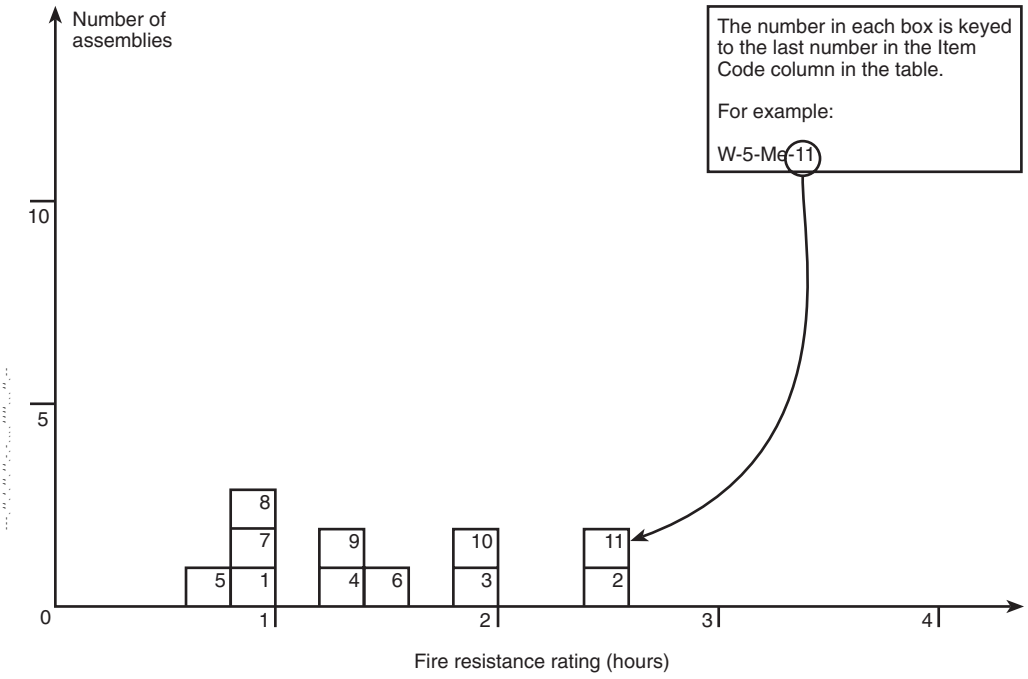

Table O.4.5.9 Metal Frame Walls 4" (100 mm) to Less Than 6" (150 mm) Thick

Item Code	Thickness	Construction Details	Performance		Reference Number			Notes	Rec Hours
			Load	Time	Pre-BMS-92	BMS-92	Post-BMS-92		
W-5-Me-1	$5^1/_2$"	3" cavity with 16 ga. channel studs ($3^1/_2$' O.C.) of $^1/_2$" × $^1/_2$" channel and 3" spacer; metal lath on ribs with plaster (3 coats) $^3/_4$" over face of lath; plaster (each side) — scratch coat — cement/lime/sand with hair; float coat — cement/lime/sand; finish coat — neat gypsum	n/a	1 hr 11 min			7	1	1
W-4-Me-2	4"	Core: steel studs per note 2; facings: both sides 1" thickness of neat gypsum plaster	n/a	$2^1/_2$ hr		1			$2^1/_2$
W-4-Me-3	4"	Core: steel studs per note 2; facings: both sides 1" thickness of 1: $^1/_2$, 1: $^1/_2$ gypsum plaster	n/a	2 hr		1			2
W-4-Me-4	4"	Core: steel per note 2; facings: both sides 1" thickness of 1:2, 1:3 gypsum plaster	n/a	$1^1/_4$ hr		1			$1^1/_4$
W-4-Me-5	$4^1/_2$"	Core: lightweight steel stud 3" in depth; facings: both sides $^3/_4$" thick sanded gypsum plaster, 1:2 scratch coat, 1:3 brown coat applied on metal lath	See note 4	45 min		1		5	$^3/_4$
W-4-Me-6	$4^1/_2$"	Core: lightweight steel studs 3" in depth; facings: both sides $^3/_4$" thick neat gypsum plaster on metal lath	See note 4	1 hr 30 min		1		5	$1^1/_2$

(Sheet 1 of 2)

Copyright National Fire Protection Association
Provided by IHS under license with NFPA
No reproduction or networking permitted without license from IHS
Not for Resale

Table O.4.5.9 Metal Frame Walls 4" (100 mm) to Less Than 6" (150 mm) Thick ***(Continued)***

Item Code	Thickness	Construction Details	Performance		Reference Number			Notes	Rec Hours
			Load	Time	Pre-BMS-92	BMS-92	Post-BMS-92		
W-4-Me-7	$4^1/_2$"	Core: lightweight steel studs 3" in depth; facings: both sides $^3/_4$" thick sanded gypsum plaster, 1:2 scratch and brown coats applied over metal lath	See note 4	1 hr		1		5	1
W-4-Me-8	$4^3/_4$"	Core: lightweight steel studs 3" in depth; facings: both sides $^7/_8$" thick sanded gypsum plaster, 1:2 scratch, 1:3 brown, applied over metal lath	See note 4	1 hr		1		5	1
W-4-Me-9	$4^3/_4$"	Core: lightweight steel studs 3" in depth; facings: both sides $^7/_8$" thick sanded gypsum plaster, 1:2 scratch and brown coats applied on metal lath	See note 4	1 hr 15 min		1		5	$1^1/_4$
W-5-Me-10	5"	Core: lightweight steel studs 3" in depth; facings: both sides 1" thick neat gypsum plaster on metal lath	See note 4	2 hr		1		5	2
W-5-Me-11	5"	Core: lightweight steel studs 3" in depth; facings: both sides 1" thick neat gypsum plaster on metal lath	See note 4	2 hr 30 min		1		5,6	$2^1/_2$

(Sheet 2 of 2)

Notes:
1. Failure mode — local back face temperature rise.
2. Ratings are for any usual type of non-bearing metal framing providing a minimum 2" air space.
3. Facing materials secured to lightweight steel studs not less than 3" deep.
4. Rating based on loading to develop a maximum stress of 7270 psi for net area of each stud.
5. Spacing of steel studs must be sufficient to develop adequate rigidity in the metal-lath or gypsum-plaster base.
6. As per note 4 but load/stud not to exceed 5120 psi.

General Note:
The construction details of the wall assemblies are as complete as the source documentation will permit. Data on the method of attachment of facings and the gauge of steel studs was provided when known. The cross-sectional area of the steel stud can be computed, thereby permitting a reasoned estimate of actual loading conditions. For load-bearing assemblies, the maximum allowable stress for the steel studs has been provided in the table "Notes." More often, it is the thermal properties of the facing materials, rather than the specific gauge of the steel, that will determine the degree of fire resistance. This is particularly true for non-bearing wall assemblies.

Copyright National Fire Protection Association
Provided by IHS under license with NFPA
No reproduction or networking permitted without license from IHS
Not for Resale

Table O.4.5.10 Metal Frame Walls 6" (150 mm) to Less Than 8" (200 mm) Thick

Item Code	Thickness	Construction Details	Performance		Reference Number			Notes	Rec Hours
			Load	Time	Pre-BMS-92	BMS-92	Post-BMS-92		
W-6-Me-1	$6^{5}/_{8}$"	On one side of 1" magnesium oxysulfate wood fiberboard sheathing attached to steel studs (see notes 1 and 2), 1" air space, and $3^{3}/_{4}$" brick secured with metal ties to steel frame every fifth course; inside facing of $^{7}/_{8}$" 1:2 sanded gypsum plaster on metal lath secured directly to studs; plaster side exposed to fire	See note 2	$1^{3}/_{4}$ hr		1		1	$1^{3}/_{4}$
W-6-Me-2	$6^{5}/_{8}$"	On one side of 1" magnesium oxysulfate wood fiberboard sheathing attached to steel studs (see notes 1 and 2), 1" air space, and $3^{3}/_{4}$" brick secured with metal ties to steel frame every fifth course; inside facing of $^{7}/_{8}$" 1:2 sanded gypsum plaster on metal lath secured directly to studs; brick face exposed to fire	See note 2	4 hr		1		1	4
W-6-Me-3	$6^{5}/_{8}$"	On one side of 1" magnesium oxysulfate wood fiberboard sheathing attached to steel studs (see notes 1 and 2), 1" air space, and $3^{3}/_{4}$" brick secured with metal ties to steel frame every fifth course; inside facing of $^{7}/_{8}$" vermiculite plaster on metal lath secured directly to studs; plaster side exposed to fire	See note 2	2 hr		1		1	2

Notes:
1. Lightweight steel studs (minimum 3" deep) used. Stud spacing dependent on loading, but in each case, spacing is to be such that adequate rigidity is provided to the metal lath plaster base.
2. Load is such that stress developed in studs is not greater than 5120 psi calculated from net stud area.

General Note:
The construction details of the wall assemblies are as complete as the source documentation will permit. Data on the method of attachment of facings and the gauge of steel studs was provided when known. The cross-sectional area of the steel stud can be computed, thereby permitting a reasoned estimate of actual loading conditions. For load-bearing assemblies, the maximum allowable stress for the steel studs has been provided in the table "Notes." More often, it is the thermal properties of the facing materials, rather than the specific gauge of the steel, that will determine the degree of fire resistance. This is particularly true for non-bearing wall assemblies.

Copyright National Fire Protection Association
Provided by IHS under license with NFPA
No reproduction or networking permitted without license from IHS
Not for Resale

Table O.4.5.11 Metal Frame Walls 8" (200 mm) to Less Than 10" (250 mm) Thick

Item Code	Thickness	Construction Details	Performance		Reference Number			Notes	Rec Hours
			Load	Time	Pre-BMS-92	BMS-92	Post-BMS-92		
W-9-Me-1	$9^1/_{16}$"	On one side of $^1/_2$" wood fiberboard sheathing next to studs, $^3/_4$" air space formed with $^3/_4$" × $1^5/_8$" wood strips placed over the fiberboard and secured to the studs; paper backed wire lath nailed to strips $3^3/_4$" brick veneer held in place by filling a $^3/_4$" space between the brick and paper backed lath with mortar; inside facing of $^3/_4$" neat gypsum plaster on metal lath attached to $^5/_{16}$" plywood strips secured to edges of steel studs; rated as combustible because of the sheathing; see notes 1 and 2; plaster exposed	See note 2	$1^1/_2$ hr		1		1	$1^1/_2$
W-9-Me-2	$9^1/_{16}$"	Same as above with brick exposed	See note 2	4 hr		1		1	4
W-8-Me-3	$8^1/_2$"	On one side of paper backed wire lath attached to studs and $3^3/_4$" brick veneer held in place by filling a 1" space between the brick and lath with mortar; inside facing of 1" paper-enclosed mineral wood blanket weighing .6 lb/ft^2 attached to studs, metal lath or paper backed wire lath laid over the blanket and attached to the studs, and $^3/_4$" sanded gypsum plaster 1:2 for the scratch and 1:3 for the brown coat (see notes 1 and 2); plaster face exposed	See note 2	4 hr		1		1	4
W-8-Me-4	$8^1/_2$"	Same as above with brick exposed	See note 2	5 hr		1		1	5

Notes:
1. Lightweight steel studs > 3" in depth. Stud spacing is dependent upon loading, but in any case the spacing is to be such that adequate rigidity is provided to the metal-lath plaster base.
2. Load is such that stress developed in the steel studs is < 5120 psi calculated from net area of the stud.

General Note:
The construction details of the wall assemblies are as complete as the source documentation will permit. Data on the method of attachment of facings and the gauge of steel studs was provided when known. The cross-sectional area of the steel stud can be computed, thereby permitting a reasoned estimate of actual loading conditions. For load-bearing assemblies, the maximum allowable stress for the steel studs has been provided in the table "Notes." More often, it is the thermal properties of the facing materials, rather than the specific gauge of the steel, that will determine the degree of fire resistance. This is particularly true for non-bearing wall assemblies.

Table O.4.5.12 Wood Frame Walls 0" (0 mm) to Less Than 4" (100 mm) Thick

Item Code	Thickness	Construction Details	Performance		Reference Number			Notes	Rec Hours
			Load	Time	Pre-BMS-92	BMS-92	Post-BMS-92		
W-3-W-1	$3^3/_4$"	Solid wall — $2^1/_4$" wood-wool slab core; $^3/_4$" gypsum plaster each side	n/a	2 hr			7	1,6	2
W-3-W-2	$3^7/_8$"	2 × 4 stud wall, $^3/_{16}$" thick cement asbestos board on both sides of wall	360 psi net area	10 min		1		2-5	$^1/_6$
W-3-W-3	$3^7/_8$"	Same as W-3-W-2 but stud cavities filled with 1 lb/ft^2 mineral wool batts	360 psi net area	40 min		1		2-5	$^2/_3$

Notes:
1. Achieved "Grade C" fire resistance (British).
2. Nominal 2 × 4 wood studs of No. 1 common or better lumber set edgewise, 2 × 4 plates at top and bottom and blocking at mid-height of wall.
3. All horizontal joints in facing material backed by 2 × 4 blocking in wall.
4. Load = 360 psi of net stud cross-sectional area.
5. Facings secured with 6d casing nails. Nail holes predrilled and 0.02"–0.03" smaller than nail diameter.
6. The wood-wool core is a pressed excelsior slab, which possesses insulating properties similar to cellulosic insulation.

--`,,```,,,,````-`-`,,`,,`,`,,`---
Copyright National Fire Protection Association
Provided by IHS under license with NFPA
No reproduction or networking permitted without license from IHS
Not for Resale

FIGURE O.4.5.13 Wood Frame Walls 4 in. (100 mm) to Less Than 6 in. (150 mm) Thick.

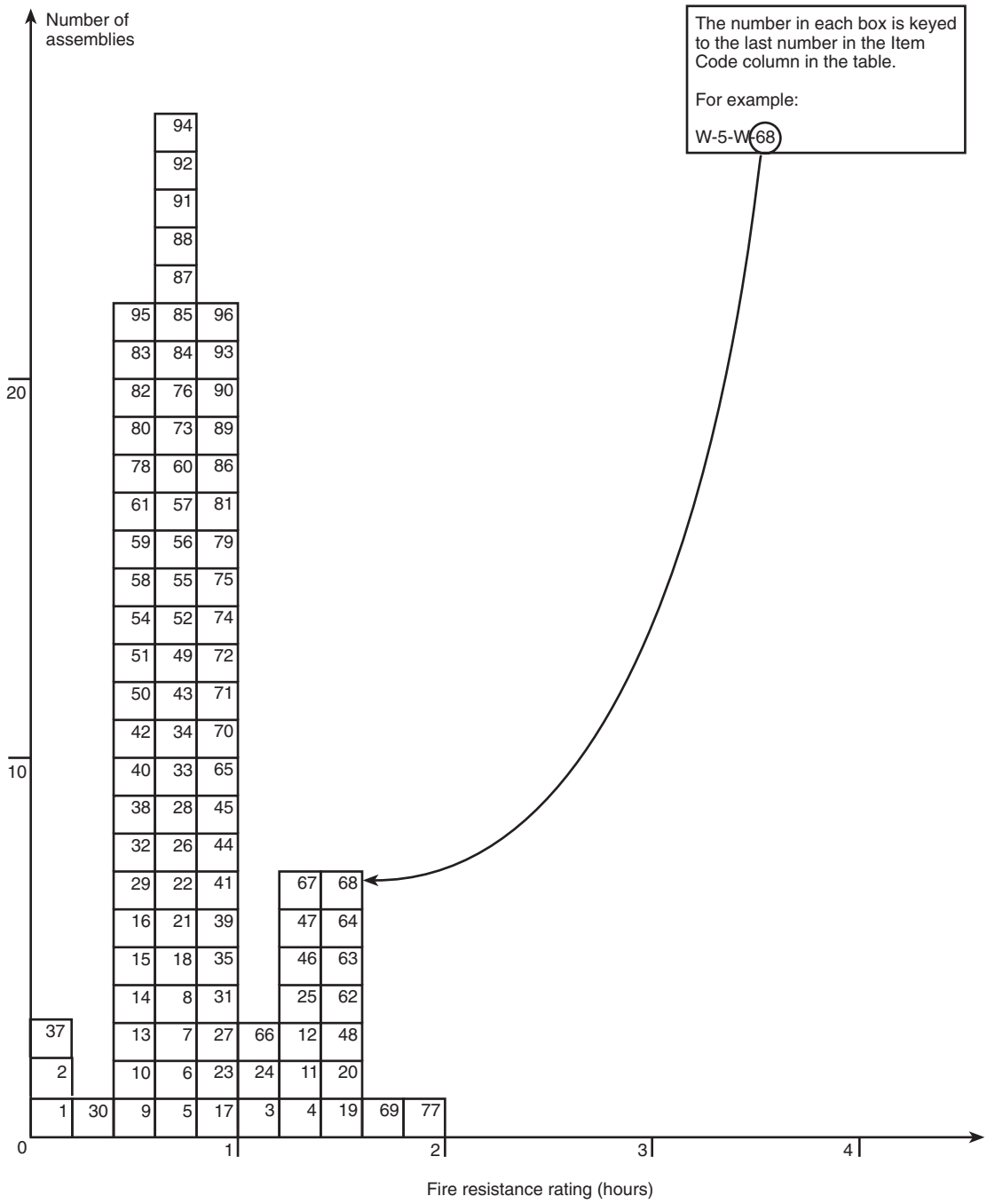

Copyright National Fire Protection Association
Provided by IHS under license with NFPA
No reproduction or networking permitted without license from IHS
Not for Resale

Table O.4.5.13 Wood Frame Walls 4" (100 mm) to Less Than 6" (150 mm) Thick

Item Code	Thickness	Construction Details	Performance		Reference Number			Notes	Rec Hours
			Load	Time	Pre-BMS-92	BMS-92	Post-BMS-92		
W-4-W-1	4"	2" × 4" stud wall; 3/16" CAB; no insulation; design A	35 min	10 min			4	1-10	1/6
W-4-W-2	4 1/8"	2" × 4" stud wall; 3/16" CAB; no insulation; design A	38 min	9 min			4	1-10	1/6
W-4-W-3	4 3/4"	2" × 4" stud wall; 3/16" CAB and 3/8" gypsum board face (both sides); design B	62 min	64 min			4	1-10	1
W-5-W-4	5"	2" × 4" stud wall; 3/16" CAB and 1/2" gypsum board face (both sides); design B	79 min	Greater than 90 min			4	1-10	1
W-4-W-5	4 3/4"	2" × 4" stud wall; 3/16" CAB and 3/8" gypsum board (both sides); design B	45 min	45 min			4	1-12	–
W-5-W-6	5"	2" × 4" stud wall; 3/16" CAB and 1/2" gypsum board face (both sides); design B	45 min	45 min			4	1-10, 12-13	–
W-4-W-7	4"	2" × 4" stud wall; 3/16" CAB face; 3 1/2" mineral wool insulation; design C	40 min	42 min			4	1-10	2/3
W-4-W-8	4"	2" × 4" stud wall; 3/16" CAB face; 3 1/2" mineral wool insulation; design C	46 min	46 min			4	1-10,43	2/3
W-4-W-9	4"	2" × 4" stud wall; 3/16" CAB face; 3 1/2" mineral wool insulation; design C	30 min	30 min			4	1-10, 12-14	
W-4-W-10	4 1/8"	2" × 4" stud wall; 3/16" CAB face; 3 1/2" mineral wool insulation; design		30 min			4	1-8,12,14	
W-4-W-11	4 3/4"	2" × 4" stud wall; 3/16" CAB face; 3/8" gypsum strips over studs; 5 1/2" mineral wool insulation; design D	79 min	79 min			4	1-10	1
W-4-W-12	4 3/4"	2" × 4" stud wall; 3/16" CAB face; 3/8" gypsum strips @ stud edges; 7 1/2" mineral wool insulation; design D	82 min	82 min			4	1-10	1
W-4-W-13	4 3/4"	2" × 4" stud wall; 3/16" CAB face; 3/8" gypsum board strips over studs; 5 1/2" mineral wool insulation; design D	30 min	30 min			4	1-12	
W-4-W-14	4 3/4"	2" × 4" stud wall; 3/16" CAB face; 3/8" gypsum board strips over studs; 7" mineral wool insulation; design D	30 min	30 min			4	1-12	
W-5-W-15	5 1/2"	2" × 4" stud wall; exposed face — CAB shingles over 1" × 6"; unexposed face — 1/8" CAB sheet; 7/16" fiberboard (wood); design E	34 min	–			4	1-10	1/2
W-5-W-16	5 1/2"	2" × 4" stud wall; exposed face — 1/8" CAB sheet; 7/16" fiberboard; unexposed face — CAB shingles over 1" × 6"; design E	32 min	33 min			4	1-10	1/2
W-5-W-17	5 1/2"	2" × 4" stud wall; exposed face — CAB shingles over 1" × 6"; unexposed face — 1/8" CAB sheet; gypsum @ stud edges; 3 1/2" mineral wool insulation; design F	51 min				4	1-10	3/4

(Sheet 1 of 7)

Copyright National Fire Protection Association
Provided by IHS under license with NFPA
No reproduction or networking permitted without license from IHS
Not for Resale

Table O.4.5.13 Wood Frame Walls 4" (100 mm) to Less Than 6" (150 mm) Thick *(Continued)*

Item Code	Thickness	Construction Details	Performance		Reference Number			Notes	Rec Hours
			Load	Time	Pre-BMS-92	BMS-92	Post-BMS-92		
W-5-W-18	$5^1/_2$"	2" × 4" stud wall; exposed face — $^1/_8$" CAB sheet; gypsum board @ stud edges; unexposed face — CAB shingles over 1" × 6"; $3^1/_2$" mineral wool insulation; design F	42 min				4	1-10	$^2/_3$
W-5-W-19	$5^5/_8$"	2" × 4" stud wall; exposed face — CAB shingles over 1" × 6"; unexposed face — $^1/_8$" CAB sheet, gypsum board @ stud edges; $5^1/_2$" mineral wool insulation; design G	74 min	85 min			4	1-10	1
W-5-W-20	$5^5/_8$"	2" × 4" stud wall; unexposed face — CAB shingles over 1" × 6"; exposed face — $^1/_8$" CAB sheet, gypsum board @ $^3/_{16}$" stud edges; $^7/_{16}$" fiberboard; $5^1/_2$" mineral wool insulation; design G	79 min	85 min			4	1-10	$1^1/_4$
W-5-W-21	$5^5/_8$"	2" × 4" stud wall; exposed face — CAB shingles 1" × 6" sheathing; unexposed face — CAB sheet, gypsum board @ stud edges; $5^1/_2$" mineral wool insulation; design G	38 min	38 min			4	1-10, 12-14	–
W-5-W-22	$5^5/_8$"	2" × 4" stud wall; exposed face — CAB sheet, gypsum board @ stud edges; unexposed face — CAB shingles 1" × 6" sheathing; $5^1/_2$" mineral wood insulation; design G	38 min	38 min			4	1-12	–
W-6-W-23	6"	2" × 4" stud wall; 16" O.C.; $^1/_2$" gypsum board each side; $^1/_2$" gypsum plaster each side	n/a	60 min			7	15	1
W-6-W-24	6"	2" × 4" stud wall; 16" O.C.; $^1/_2$" gypsum board each side; $^1/_2$" gypsum plaster each side	n/a	68 min			7	16	1
W-6-W-25	$6^7/_8$"	2" × 4" stud wall; 18" O.C.; $^3/_4$" gypsum plank each side; $^3/_{16}$" gypsum plaster each side	n/a	80 min			7	15	$1^1/_3$
W-5-W-26	$5^1/_8$"	2" × 4" stud wall; 16" O.C.; $^3/_8$" gypsum board each side; $^3/_{16}$" gypsum plaster each side	n/a	37 min			7	15	$^1/_2$
W-5-W-27	$5^3/_4$"	2" × 4" stud wall; 16" O.C.; $^3/_8$" gypsum lath each side; $^1/_2$" gypsum plaster each side	n/a	52 min			7	15	$^3/_4$
W-5-W-28	5"	2" × 4" stud wall; 16" O.C.; $^1/_2$" gypsum board each side	n/a	37 min			7	16	$^1/_2$
W-5-W-29	5"	2" × 4" stud wall; $^1/_2$" fiberboard both sides 14% M.C. with F.R. paint @ 35 gm/ft^2	n/a	28 min			7	15	$^1/_3$
W-4-W-30	$4^3/_4$"	2" × 4" stud wall; fire side — $^1/_4$" (wood) fiberboard; back face — $^1/_2$" CAB; 16" O.C.	n/a	17 min			7	15,16	$^1/_4$
W-5-W-31	$5^1/_8$"	2" × 4" stud wall; 16" O.C.; $^1/_2$" fiberboard insulation with $^1/_{32}$" asbestos (both sides of each board)	n/a	50 min			7	16	$^3/_4$
W-4-W-32	$4^1/_4$"	2" × 4" stud wall; $^3/_8$" thick gypsum wallboard on both faces; insulated cavities	note 23	25 min		1		17,18,23	$^1/_3$
W-4-W-33	$4^1/_2$"	2" × 4" stud wall; $^1/_2$" thick gypsum wallboard on both faces	note 17	40 min		1		17,23	$^2/_3$

(Sheet 2 of 7)

Copyright National Fire Protection Association
Provided by IHS under license with NFPA
No reproduction or networking permitted without license from IHS
Not for Resale

Table O.4.5.13 Wood Frame Walls 4" (100 mm) to Less Than 6" (150 mm) Thick *(Continued)*

Item Code	Thickness	Construction Details	Performance		Reference Number			Notes	Rec Hours
			Load	Time	Pre-BMS-92	BMS-92	Post-BMS-92		
W-4-W-34	4 1/2"	2" × 4" stud wall; 1/2" thick gypsum wallboard on both faces; insulated cavities	note 17	45 min		1		17,18,23	3/4
W-4-W-35	4 1/2"	2" × 4" stud wall; 1/2" thick gypsum wallboard on both faces; insulated cavities	n/a	1 hr		1		17,18,24	1
W-4-W-36	4 1/2"	2" × 4" stud wall; 1/2" thick, 1.1 lb/ft^2 wood fiberboard sheathing on both faces	note 23	15 min		1		17,23	1/4
W-4-W-37	4 1/2"	2" × 4" stud wall; 1/2" thick, 0.7 lb/ft^2 wood fiberboard sheathing on both faces	note 23	10 min		1		17,23	1/6
W-4-W-38	4 1/2"	2" × 4" stud wall; 1/2" thick, "flameproofed," 1.6 lb/ft^2 wood fiberboard sheathing on both faces	note 23	30 min		1		17,23	1/2
W-4-W-39	4 1/2"	2" × 4" stud wall; 1/2" thick gypsum wallboard on both faces; insulated cavities	note 23	1 hr		1		17,18,23	1
W-4-W-40	4 1/2"	2" × 4" stud wall; 1/2" thick, 1:2, 1:3 gypsum plaster on wood lath on both faces	note 23	30 min		1		17,21,23	1/2
W-4-W-41	4 1/2"	2" × 4" stud wall; 1/2" thick, 1:2, 1:3 gypsum plaster on wood lath on both faces; insulated cavities	note 23	1 hr		1		17,18, 21,23	1
W-4-W-42	4 1/2"	2" × 4" stud wall; 1/2" thick, 1:5, 1:7.5 lime plaster on wood lath on both wall faces	note 23	30 min		1		17,21,23	1/2
W-4-W-43	4 1/2"	2" × 4" stud wall; 1/2" thick, 1:5, 1:7.5 lime plaster on wood lath on both faces, insulated cavities	note 23	45 min		1		17,18, 21,23	3/4
W-4-W-44	4 5/8"	2" × 4" stud wall; 3/16" thick cement-asbestos over 3/8" thick gypsum board on both faces	note 23	1 hr		1		25,26, 23,27	1
W-4-W-45	4 5/8"	2" × 4" stud wall; studs faced with 4" wide strips of 3/8" thick gypsum board; 3/16" thick cement-asbestos board on both faces; insulated cavities	note 23	1 hr		1		23,25, 28,27	1
W-4-W-46	4 5/8"	Same as W-4-W-45 but non-load bearing	n/a	1 1/4 hr		1		24,28	1 1/4
W-4-W-47	4 7/8"	2" × 4" stud wall; 3/16" thick cement-asbestos board over 1/2" thick gypsum sheathing on both faces	note 23	1 1/4 hr		1		23,25, 27,26	1 1/4
W-4-W-48	4 7/8"	Same as W-4-W-47 but non-load bearing	n/a	1 1/2 hr		1		24,27	1 1/2
W-5-W-49	5"	2" × 4" stud wall; exterior face: 3/4" wood sheathing, asbestos felt 14 lb/100 ft^2 and 5/32" cement-asbestos shingles; interior face 4" wide strips of 3/8" gypsum board over studs; wall faced with 3/16" thick cement-asbestos board	note 23	40 min		1		18,23, 25,26,29	2/3

(Sheet 3 of 7)

Copyright National Fire Protection Association
Provided by IHS under license with NFPA
No reproduction or networking permitted without license from IHS
Not for Resale

Table O.4.5.13 Wood Frame Walls 4" (100 mm) to Less Than 6" (150 mm) Thick *(Continued)*

Item Code	Thickness	Construction Details	Performance		Reference Number			Notes	Rec Hours
			Load	Time	Pre-BMS-92	BMS-92	Post-BMS-92		
W-5-W-50	5"	2" × 4" stud wall; exterior face as per W-5-W-49; interior face: $^{9}/_{16}$" composite board consisting of $^{7}/_{16}$" thick wood fiber board faced with $^{1}/_{8}$" thick cement-asbestos board; exterior side exposed to fire	note 23	30 min		1		23,25, 26,30	$^{1}/_{2}$
W-5-W-51	5"	Same as W-5-W-50 but interior side exposed to fire	note 23	30 min		1		23,25,26	$^{1}/_{2}$
W-5-W-52	5"	Same as W-5-W-49 but exterior side exposed to fire	note 23	45 min		1		18,23, 25,26	$^{3}/_{4}$
W-5-W-53	5"	2" × 4" stud wall; $^{3}/_{4}$" thick T&G wood boards on both sides	note 23	20 min		1		17,23	$^{1}/_{3}$
W-5-W-54	5"	Same as W-5-W-53 but with insulated cavities	note 23	35 min		1		17,18,23	$^{1}/_{2}$
W-5-W-55	5"	2" × 4" stud wall; $^{3}/_{4}$" thick T&G wood boards on both sides with 30 lb/100 ft^2 asbestos, paper between studs and boards	note 23	45 min		1		17,23	$^{3}/_{4}$
W-5-W-56	5"	2" × 4" stud wall; $^{1}/_{2}$" thick, 1:2, 1:3 gypsum plaster on metal lath on both sides of wall	note 23	45 min		1		17,21,23	$^{3}/_{4}$
W-5-W-57	5"	2" × 4" stud wall; $^{3}/_{4}$" thick 2:1:8, 2:1:12 lime and Keene's cement plaster on metal lath, both sides of wall	note 23	45 min		1		17,21,23	$^{3}/_{4}$
W-5-W-58	5"	2" × 4" stud wall; $^{3}/_{4}$" thick 2:1:8, 2:1:10 lime portland cement plaster over metal lath on both sides of wall	note 23	30 min		1		17,21,23	$^{1}/_{2}$
W-5-W-59	5"	2" × 4" stud wall; $^{3}/_{4}$" thick 1:5, 1:7.5 lime plaster on metal lath on both sides of wall	note 23	30 min		1		17,21,23	$^{1}/_{2}$
W-5-W-60	5"	2" × 4" stud wall; $^{3}/_{4}$" thick, 1:1/30:2, 1:1/30:3 portland cement, asbestos fiber plaster on metal lath on both sides of wall	note 23	45 min		1		17,21,23	$^{3}/_{4}$
W-5-W-61	5"	2" × 4" stud wall; $^{3}/_{4}$" thick 1:2, 1:3 portland cement plaster on metal lath on both sides of wall	note 23	30 min		1		17,21,23	$^{1}/_{2}$
W-5-W-62	5"	2" × 4" stud wall; $^{3}/_{4}$" thick neat plaster on metal lath on both sides of wall	n/a	1 hr 30 min		1		17,22,24	$1^{1}/_{2}$
W-5-W-63	5"	2" × 4" stud wall; $^{3}/_{4}$" thick neat gypsum plaster on metal lath on both sides of wall	note 23	1 hr 30 min		1		17,21,23	$1^{1}/_{2}$
W-5-W-64	5"	2" × 4" stud wall; $^{3}/_{4}$" thick 1:2, 1:2 gypsum plaster on metal lath on both sides of wall, insulated cavities	note 23	1 hr 30 min		1		17,18, 21,23	$1^{1}/_{2}$
W-5-W-65	5"	2" × 4" stud wall, same as W-5-W-64 but wall cavities not insulated	note 23	1 hr		1		17,21,23	1
W-5-W-66	5"	2" × 4" stud wall; $^{3}/_{4}$" thick 1:2, 1:3 gypsum plaster on metal lath on both sides of wall, insulated cavities	note 23	1 hr 15 min		1		17,18, 21,23	$1^{1}/_{4}$

(Sheet 4 of 7)

Copyright National Fire Protection Association
Provided by IHS under license with NFPA
No reproduction or networking permitted without license from IHS
Not for Resale

Table O.4.5.13 Wood Frame Walls 4" (100 mm) to Less Than 6" (150 mm) Thick *(Continued)*

Item Code	Thickness	Construction Details	Performance		Reference Number			Notes	Rec Hours
			Load	Time	Pre-BMS-92	BMS-92	Post-BMS-92		
W-5-W-67	$5^{1}/_{16}$"	Same as W-5-W-49 except cavity insulation of $1^{3}/_{4}$ lb/ft^2 mineral wool batts; rating applies when either wall side exposed to fire	note 23	1 hr 15 min		1		23,26,25	$1^{1}/_{4}$
W-5-W-68	$5^{1}/_{4}$"	2" × 4" stud wall; $^{7}/_{8}$" thick 1:2, 1:3 gypsum plaster on metal lath on both sides of wall, insulated cavities	note 23	1 hr 30 min		1		17,18, 21,23	$1^{1}/_{2}$
W-5-W-69	$5^{1}/_{4}$"	2" × 4" stud wall; $^{7}/_{8}$" thick neat gypsum plaster applied on metal lath, on both sides of wall	n/a	1 hr 45 min		1		17,22,24	$1^{3}/_{4}$
W-5-W-70	$5^{1}/_{4}$"	2" × 4" stud wall; $^{1}/_{2}$" thick neat gypsum plaster on $^{3}/_{8}$" plain gypsum lath, both sides of wall	note 23	1 hr		1		17,22,23	1
W-5-W-71	$5^{1}/_{4}$"	2" × 4" stud wall; $^{1}/_{2}$" thick, 1:2, 1:2 gypsum plaster on $^{3}/_{8}$" thick plain gypsum lath with $1^{3}/_{4}$" × $1^{3}/_{4}$" metal lath pads nailed 8" O.C. vertically, 16" O.C. horizontally, both sides of wall	note 23	1 hr		1		17,21,23	1
W-5-W-72	$5^{1}/_{4}$"	2" × 4" stud wall; $^{1}/_{2}$" thick 1:2, 1:2 gypsum plaster on $^{3}/_{8}$" perforated gypsum lath, one $^{3}/_{4}$" diameter hole or larger per 16" sq. in. of lath surface, both sides of wall	note 23	1 hr		1		17,21,23	1
W-5-W-73	$5^{1}/_{4}$"	2" × 4" stud wall; $^{1}/_{2}$" thick 1:2, 1:2 gypsum plaster on $^{3}/_{8}$" gypsum lath (plain, indented or perforated) both sides of wall	note 23	45 min		1		17,21,23	$^{3}/_{4}$
W-5-W-74	$5^{1}/_{4}$"	2" × 4" stud wall; $^{7}/_{8}$" thick 1:2, 1:3 gypsum plaster over metal lath on both sides of wall	note 23	1 hr		1		17,21,23	1
W-5-W-75	$5^{1}/_{4}$"	2" × 4" stud wall; $^{7}/_{8}$" thick 1:1/30:2, 1:1/30:3 portland cement, asbestos plaster applied over metal lath on both sides of wall	note 23	1 hr		1		17,21,23	1
W-5-W-76	$5^{1}/_{4}$"	2" × 4" stud wall; $^{7}/_{8}$" thick 1:2, 1:3 portland cement plaster over metal lath on both sides of wall	note 23	45 min		1		17,21,23	$^{3}/_{4}$
W-5-W-77	$5^{1}/_{2}$"	2" × 4" stud wall; 1" thick neat gypsum plaster over metal lath on both sides of wall, non-load bearing	n/a	2 hr		1		17,22,24	2
W-5-W-78	$5^{1}/_{2}$"	2" × 4" stud wall; $^{1}/_{2}$" thick 1:2, 1:2 gypsum plaster on $^{1}/_{2}$" thick, 0.7 lb/ft^2 wood fiberboard both sides of wall	note 23	35 min		1		17,21,23	$^{1}/_{2}$
W-4-W-79	$4^{3}/_{4}$"	2" × 4" wood stud wall; $^{1}/_{2}$" thick 1:2, 1:2 gypsum plaster over wood lath on both sides of wall; mineral wool insulation	n/a	1 hr			43	21,31, 35,38	1
W-4-W-80	$4^{3}/_{4}$"	Same as W-4-W-79 but uninsulated	n/a	35 min			43	21,31,35	$^{1}/_{2}$

(Sheet 5 of 7)

Copyright National Fire Protection Association
Provided by IHS under license with NFPA
No reproduction or networking permitted without license from IHS
Not for Resale

Table O.4.5.13 Wood Frame Walls 4" (100 mm) to Less Than 6" (150 mm) Thick *(Continued)*

Item Code	Thickness	Construction Details	Performance		Reference Number			Notes	Rec Hours
			Load	Time	Pre-BMS-92	BMS-92	Post-BMS-92		
W-4-W-81	$4^3/_4$"	2" × 4" wood stud wall; $^1/_2$" thick 3:1:8, 3:1:12 lime, Keene's cement, sand plaster over wood lath both sides of wall; mineral wool insulation	n/a	1 hr			43	21,31, 35,40	1
W-4-W-82	$4^3/_4$"	2" × 4" wood stud wall; $^1/_2$" thick 1:6 $^1/_4$, 1:6 $^1/_4$ lime, Keene's cement plaster over wood lath both sides of wall; mineral wool insulation	n/a	30 min			43	21,31, 35,40	$^1/_2$
W-4-W-83	$4^3/_4$"	2" × 4" wood stud wall; $^1/_2$" thick 1:5, 1:7.5 lime plaster over wood lath on both sides of wall	n/a	30 min			43	21,31,35	$^1/_2$
W-5-W-84	$5^1/_8$"	2" × 4" wood stud wall; $^{11}/_{16}$" thick 1:5, 1:7.5 lime plaster over wood lath on both sides of wall; mineral wool insulation	n/a	45 min			43	21,31, 35,39	$^1/_2$
W-5-W-85	$5^1/_4$"	2" × 4" wood stud wall; $^3/_4$" thick 1:5, 1:7 lime plaster over wood lath on both sides of wall; mineral wool insulation	n/a	40 min			43	21,31, 35,40	$^2/_3$
W-5-W-86	$5^1/_4$"	2" × 4" wood stud wall; $^1/_2$" thick 2:1:12 lime, Keene's cement and sand scratch coat, $^1/_2$" thick 2:1:18 lime, Keene's cement, sand brown coat over wood lath on both sides of wall; mineral wool insulation	n/a	1 hr			43	21,31, 35,40	1
W-5-W-87	$5^1/_4$"	2" × 4" wood stud wall; $^1/_2$" thick 1:2, 1:2 gypsum plaster over $^3/_8$" thick plaster board on both sides of wall	n/a	45 min			43	21,31	$^3/_4$
W-5-W-88	$5^1/_4$"	2" × 4" wood stud wall; $^1/_2$" thick 1:2, 1:2 gypsum plaster over $^3/_8$" thick gypsum lath on both sides of wall	n/a	45 min			43	21,31	$^3/_4$
W-5-W-89	$5^1/_4$"	2" × 4" wood stud wall; $^1/_2$" thick 1:2, 1:2 gypsum plaster over $^3/_8$" gypsum lath, on both sides of wall	n/a	1 hr			43	21,31,33	1
W-5-W-90	$5^1/_4$"	2" × 4" wood stud wall; $^1/_2$" thick neat plaster over $^3/_8$" thick gypsum lath, on both sides of wall	n/a	1 hr			43	21,22,31	1
W-5-W-91	$5^1/_4$"	2" × 4" wood stud wall; $^1/_2$" thick 1:2, 1:2 gypsum plaster over $^3/_8$" thick indented gypsum lath, on both sides of wall	n/a	45 min			43	21,31	$^3/_4$
W-5-W-92	$5^1/_4$"	2" × 4" wood stud wall; $^1/_2$" thick 1:2, 1:2 gypsum plaster over perforated gypsum lath, $^3/_8$" thick on both wall faces	n/a	45 min			43	21,31,34	$^3/_4$
W-5-W-93	$5^1/_4$"	2" × 4" wood stud wall; $^1/_2$" thick 1:2, 1:2 gypsum plaster over $^3/_8$" thick perforated gypsum lath on both sides of wall	n/a	1 hr			43	21,31	1
W-5-W-94	$5^1/_4$"	2" × 4" wood stud wall; $^1/_2$" thick 1:2, 1:2 gypsum plaster over perforated gypsum lath $^3/_8$" thick over both sides of wall	n/a	45 min			43	21,31,34	$^3/_4$

(Sheet 6 of 7)

Copyright National Fire Protection Association
Provided by IHS under license with NFPA
No reproduction or networking permitted without license from IHS
Not for Resale

Table O.4.5.13 Wood Frame Walls 4" (100 mm) to Less Than 6" (150 mm) Thick *(Continued)*

Item Code	Thickness	Construction Details	Performance		Reference Number			Notes	Rec Hours
			Load	Time	Pre-BMS-92	BMS-92	Post-BMS-92		
W-5-W-95	$5\frac{1}{4}$"	2" × 4" wood stud wall; $\frac{1}{2}$" thick 1:2, 1:2 gypsum plaster over $\frac{1}{2}$" thick wood fiberboard plaster base on both sides of wall	n/a	35 min			43	21,31,36	$\frac{1}{2}$
W-5-W-96	$5\frac{3}{4}$"	2" × 4" wood stud wall; $\frac{1}{2}$" thick 1:2, 1:2 gypsum plaster over $\frac{7}{8}$" thick flameproofed wood fiberboard, on both sides of wall	n/a	1 hr			43	21,31,37	1

(Sheet 7 of 7)

Notes:
1. All specimens 8' or 8'8" × 10'4" — i.e., $\frac{1}{2}$ of furnace size. See note 42 for design cross section.
2. Specimens tested in tandem (two per exposure).
3. Test per ASA No. A-2-1934 except where unloaded. Also, panels were of "half" size of furnace opening. Time value signifies a thermal failure time.
4. 2 × 4 studs 16" O.C.; where 10'4", blocking @ 2'4" height.
5. Facing 4' × 8' cement-asbestos board sheets $\frac{3}{16}$" thick.
6. Sheathing (diagonal) $\frac{25}{32}$" × $5\frac{1}{2}$" — 1" × 6" pine.
7. Facing shingles — 24" × 12" × $\frac{5}{32}$" where used.
8. Asbestos felt — asphalt set between sheathing and shingles.
9. Load — 30,500 lb or 360 psi/stud where load was tested.
10. Walls were tested beyond achievement of first test end point. A load bearing time in excess of performance time indicates that although thermal criteria were exceeded, load bearing ability continued.
11. Wall was rated for 1 hr combustible use in original source.
12. Hose stream test specimen. See table entry of similar design above for recommended rating.
13. Rated $1\frac{1}{4}$ hr load bearing. Rated $1\frac{1}{2}$ hr non-load bearing.
14. Failed hose stream.
15. Test terminated due to flame penetration.
16. Test terminated — local back face temperature rise.
17. Nominal 2 × 4 wood studs of No. 1 common or better lumber set edgewise. 2 × 4 plates at top and bottom and blocking at mid-height of wall.
18. Cavity insulation consists of rock wool batts 1.0 lb/ft^2 of filled cavity area.
19. Cavity insulation consists of glass-wool batts 0.6 lb/ft^2 of filled cavity area.
20. Cavity insulation consists of blown-in rock wool 2.0 lb/ft^2 of filled cavity area.
21. Mix proportions for plastered walls as follows: first ratio indicates scratch coat mix, weight of dry plaster to dry sand; second ratio indicates brown coat mix.
22. "Neat" plaster is taken to mean unsanded wood-fiber gypsum plaster.
23. Load = 360 psi of net stud cross-sectional area.
24. Rated as non-load bearing.
25. Nominal 2 × 4 studs per note 17, spaced at 16" on center.
26. Horizontal joints in facing material supported by 2 × 4 blocking within wall.
27. Facings secured with 6d casing nails. Nail holes predrilled and were 0.02"–0.03" smaller than nail diameter.
28. Cavity insulation consists of mineral wool batts weighing 2 lb/ft^2 of filled cavity area.
29. Interior wall face exposed to fire.
30. Exterior wall face exposed to fire.
31. Nominal 2 × 4 studs of yellow pine or Douglas fir spaced 16" on center in a single row.
32. Studs as in note 31 except double row, with studs in rows staggered.
33. Six roofing nails with metal-lath pads around heads to each 16" × 48" lath.
34. Areas of holes less than $2\frac{3}{4}$% of area of lath.
35. Wood laths were nailed with either 3d or 4d nails, one nail to each bearing, and the end joining broken every 7th course.
36. $\frac{1}{2}$" thick fiberboard plaster base nailed with 3d or 4d common wire nails spaced 4" – 6" on center.
37. $\frac{7}{8}$" thick fiberboard plaster base nailed with 5d common wire nails spaced 4" – 6" on center.
38. Mineral wool batts 1.05-1.25 lb/ft^2 with waterproofed-paper backing.
39. Blown-in mineral wool insulation, 2.2 lb/ft^2.
40. Mineral wool batts, 1.4 lb/ft^2 with waterproofed-paper backing.
41. Mineral wool batts, 0.9 lb/ft^2.
42. See wall design diagram, below.
43. Duplicate specimen of W-4-W-7, tested simultaneously with W-4-W-7 in 18 ft test furnace.

Copyright National Fire Protection Association
Provided by IHS under license with NFPA
No reproduction or networking permitted without license from IHS
Not for Resale

FIGURE O.4.5.14 [Diagram of] Wall Design.

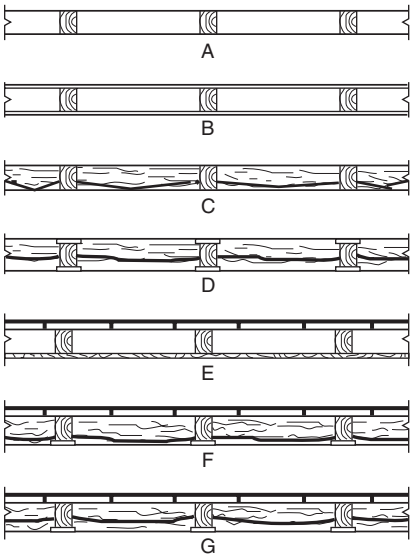

Table O.4.5.14 Wood Frame Walls 6"(150 mm) to Less Than 8" (200 mm) Thick

Item Code	Thickness	Construction Details	Performance		Reference Number			Notes	Rec Hours
			Load	Time	Pre-BMS-92	BMS-92	Post-BMS-92		
W-6-W-1	$6^1/_4$"	2" × 4" stud wall, $^1/_2$" thick, 1:2, 1:2 gypsum plaster on $^7/_8$" flameproofed wood fiberboard weighing 2.8 lb/ft^2 — both sides of wall	note 3	1 hr		1		1-3	1
W-6-W-2	$6^1/_2$"	2" × 4" stud wall, $^1/_2$" thick, 1:3, 1:3 gypsum plaster on 1" thick magnesium oxysulfate wood fiberboard — both sides of wall	note 3	45 min		1		1-3	$^3/_4$
W-7-W-3	$7^1/_4$"	Double row of 2 × 4 studs, $^1/_2$" thick 1:2, 1:2 gypsum plaster applied over $^3/_8$" thick perforated gypsum lath on both sides of wall; mineral wool insulation	n/a	1 hr			43	2,4,5	1
W-7-W-4	$7^1/_2$"	Double row of 2 × 4 studs, $^5/_8$" thick 1:2, 1:2 gypsum plaster applied over $^3/_8$" thick perforated gypsum lath overlaid with 2" × 2", 16 gauge wire fabric, on both sides of wall	n/a	1 hr 15 min			43	2,4	$1^1/_4$

Notes:
1. Nominal 2 × 4 wood studs of No. 1 common or better lumber set edgewise. 2 × 4 plates at top and bottom and blocking at mid-height of wall.
2. Mix proportions for plastered walls as follows: first ratio indicates scratch coat mix, weight of dry plaster to dry sand; second ratio indicates brown coat mix.
3. Load = 360 psi of net stud cross-sectional area.
4. Nominal 2 × 4 studs of yellow pine or Douglas fir spaced 16" in a double row, with studs in rows staggered.
5. Mineral wool batts, 0.19 lb/ft^2.

Copyright National Fire Protection Association
Provided by IHS under license with NFPA
No reproduction or networking permitted without license from IHS
Not for Resale

Table O.4.5.15 Walls — Miscellaneous Materials 0" (0 mm) to Less Than 4" (100 mm) Thick

Item Code	Thickness	Construction Details	Performance		Reference Number			Notes	Rec Hours
			Load	Time	Pre-BMS-92	BMS-92	Post-BMS-92		
W-3-Mi-1	$3\frac{7}{8}$"	Glass brick wall (bricks $5\frac{3}{4}" \times 5\frac{3}{4}" \times 3\frac{7}{8}"$) $\frac{1}{4}$" mortar bed — cement/lime/sand; mounted in brick (9") wall with mastic and $\frac{1}{2}$" asbestos rope	n/a	1 hr			7	1,2	1
W-3-Mi-2	3"	Core: 2" magnesium oxysulfate wood-fiber blocks laid in portland cement lime mortar; facings on both sides; see note 3	n/a	1 hr		1		3	1
W-3-Mi-3	$3\frac{7}{8}$"	Core: $8" \times 4\frac{7}{8}$" glass blocks $3\frac{7}{8}$" thick weighing 4 lb each; laid in portland cement lime mortar, horizontal mortar joints reinforced with metal lath	n/a	$\frac{1}{4}$ hr		1			$\frac{1}{4}$

Notes:
1. No failure reached at 1 hour.
2. These glass blocks are assumed to be solid based on other test data available for similar but hollow units that show significantly reduced fire endurance.
3. Minimum of $\frac{1}{2}$" of 1:3 sanded gypsum plaster required to develop this rating.

Table O.4.5.16 Walls — Miscellaneous Materials 4" (100 mm) to Less Than 6" (150 mm) Thick

Item Code	Thickness	Construction Details	Performance		Reference Number			Notes	Rec Hours
			Load	Time	Pre-BMS-92	BMS-92	Post-BMS-92		
W-4-Mi-1	4"	Core: 3" magnesium oxysulfate wood-fiber blocks laid in portland cement mortar; facings: both sides per note 1	n/a	2 hr		1			2

Notes:
1. $\frac{1}{2}$" sanded gypsum plaster. Voids in hollow blocks to be not more than 30%.

--`,,```,,,,````-`-`,,`,,`,`,,`---

Copyright National Fire Protection Association
Provided by IHS under license with NFPA
No reproduction or networking permitted without license from IHS
Not for Resale

FIGURE O.4.5.17 Finish Ratings — Inorganic Materials.

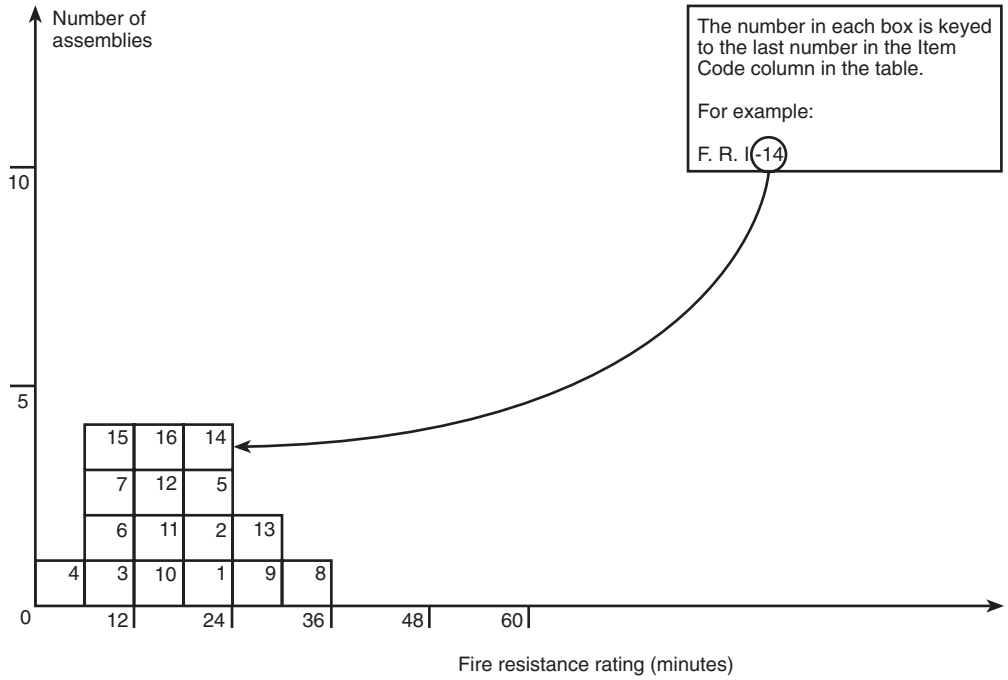

Table O.4.5.17 Finish Ratings — Inorganic Materials

Item Code	Thickness	Construction Details	Performance	Reference Number			Notes	Rec F.R. (min.)
			Finish Rating	Pre-BMS-92	BMS-92	Post-BMS-92		
FR-I-1	$^{9}/_{16}$"	$^{3}/_{8}$" gypsum wallboard faced with $^{3}/_{16}$" cement asbestos board	20 min		1		1,2	15
FR-I-2	$^{11}/_{16}$"	$^{1}/_{2}$" gypsum sheathing faced with $^{3}/_{16}$" cement asbestos board	20 min		1		1,2	20
FR-I-3	$^{3}/_{16}$"	$^{3}/_{16}$" cement asbestos board over uninsulated cavity	10 min		1		1,2	5
FR-I-4	$^{3}/_{16}$"	$^{3}/_{16}$" cement asbestos board over insulated cavities	5 min		1		1,2	5
FR-I-5	$^{3}/_{4}$"	$^{3}/_{4}$" thick 1:2, 1:3 gypsum plaster over paper backed metal lath	20 min		1		1-3	20
FR-I-6	$^{3}/_{4}$"	$^{3}/_{4}$" thick portland cement plaster on metal lath	10 min		1		1,2	10
FR-I-7	$^{3}/_{4}$"	$^{3}/_{4}$" thick, 1:5, 1:75 lime plaster on metal lath	10 min		1		1,2	10
FR-I-8	1"	1" thick neat gypsum plaster on metal lath	35 min		1		1,2,4	35
FR-I-9	$^{3}/_{4}$"	$^{3}/_{4}$" thick neat gypsum plaster on metal lath	30 min		1		1,2,4	30
FR-I-10	$^{3}/_{4}$"	$^{3}/_{4}$" thick 1:2, 1:2 gypsum plaster on metal lath	15 min		1		1-3	15
FR-I-11	$^{1}/_{2}$"	Same as F.R.-I-7, except $^{1}/_{2}$" thick on wood lath	15 min		1		1-3	15
FR-I-12	$^{1}/_{2}$"	$^{1}/_{2}$" thick, 1:2, 1:3 gypsum plaster on wood lath	15 min		1		1-3	15

(Sheet 1 of 2)

Copyright National Fire Protection Association
Provided by IHS under license with NFPA
No reproduction or networking permitted without license from IHS
Not for Resale

Table O.4.5.17 Finish Ratings — Inorganic Materials ***(Continued)***

Item Code	Thickness	Construction Details	Performance	Reference Number			Notes	Rec F.R. (min.)
			Finish Rating	Pre-BMS-92	BMS-92	Post-BMS-92		
FR-I-13	$^{7}/_{8}$"	$^{1}/_{2}$" thick, 1:2, 1:2 gypsum plaster on $^{3}/_{8}$" perforated gypsum lath	30 min		1		1-3	30
FR-I-14	$^{7}/_{8}$"	$^{1}/_{2}$" thick, 1:2, 1:2 gypsum plaster on $^{3}/_{8}$" thick plain or indented gypsum plaster	20 min		1		1-3	20
FR-I-15	$^{3}/_{8}$"	$^{3}/_{8}$" gypsum wallboard	10 min		1		1,2	10
FR-I-16	$^{1}/_{2}$"	$^{1}/_{2}$" gypsum wallboard	15 min		1		1,2	15

(Sheet 2 of 2)

Notes:
1. The finish rating is the time required to obtain an average temperature rise of 250°F, or a single point rise of 325°F, at the interface between the material being rated and the substrate being protected.
2. Tested in accordance with the *Standard Specifications for Fire Tests of Building Construction and Materials*, ASA A2.
3. Mix proportions for plaster as follows: first ratio, dry weight of plaster to dry weight of sand for scratch coat; second ratio, plaster: sand for brown coat.
4. Neat plaster means unsanded wood-fiber gypsum plaster.

General Note:
The finish rating of modern building materials can be found in the current literature.

Table O.4.5.18 Finish Rating — Organic Materials

Item Code	Thickness	Construction Details	Performance	Reference Number			Notes	Rec F.R. (min.)
			Finish Rating	Pre-BMS-92	BMS-92	Post-BMS-92		
FR-O-1	$^{9}/_{16}$"	$^{7}/_{16}$" wood fiber board faced with $^{1}/_{8}$" cement asbestos board	15 min		1		1,2	15
FR-O-2	$^{29}/_{32}$"	$^{3}/_{4}$" wood sheathing, asbestos felt weighing 14 lb/100 ft^2 and $^{5}/_{32}$" cement asbestos shingles	20 min		1		1,2	20
FR-O-3	$1^{1}/_{2}$"	1" thick magnesium oxysulfate wood fiberboard faced with 1:3, 1:3 gypsum plaster, $^{1}/_{2}$" thick	20 min		1		1-3	20
FR-O-4	$^{1}/_{2}$"	$^{1}/_{2}$" thick wood fiberboard	5 min		1		1,2	5
FR-O-5	$^{1}/_{2}$"	$^{1}/_{2}$" thick flameproofed wood fiberboard	10 min		1		1,2	10
FR-O-6	1"	$^{1}/_{2}$" thick wood fiberboard faced with $^{1}/_{2}$" thick 1:2, 1:2 gypsum plaster	15 min		1		1-3	15
FR-O-7	$1^{3}/_{8}$"	$^{7}/_{8}$" thick flameproofed wood fiberboard faced with $^{1}/_{2}$" thick 1:2, 1:2 gypsum plaster	30 min		1		1-3	30
FR-O-8	$1^{1}/_{4}$"	$1^{1}/_{4}$" thick plywood	30 min			35		30

Notes:
1. The finish rating is the time required to obtain an average temperature rise of 250°F, or a single point rise of 325°F, at the interface between the material being rated and the substrate being protected.
2. Tested in accordance with the *Standard Specifications for Fire Tests of Building Construction and Materials*, ASA A2.
3. Plaster ratios as follows: first ratio is for scratch coat, weight of dry plaster: weight of dry sand; second ratio is for the brown coat.

General Note:
The finish rating of thinner materials, particularly thinner woods, have not been listed because the possible effects of shrinkage, warpage, and aging cannot be predicted.

Copyright National Fire Protection Association
Provided by IHS under license with NFPA
No reproduction or networking permitted without license from IHS
Not for Resale

Table O.4.5.19 Reinforced Concrete Columns Minimum Dimension 0" (0 mm) to Less Than 6" (150 mm)

Item Code	Minimum Dimension	Construction Details	Performance		Reference Number			Notes	Rec Hours
			Load	Time	Pre-BMS-92	BMS-92	Post-BMS-92		
C-6-RC-1	6"	6" × 6" square columns; gravel aggregate concrete (4030 psi); reinforcement — vertical four $^{7}/_{8}$" rebars; horizontal — $^{5}/_{16}$" ties @ 6" pitch; cover 1"	34.7 tons	62 min			7	1,2	1
C-6-RC-2	6"	6" × 6" square columns; gravel aggregate concrete (4200 psi); reinforcement — vertical four $^{1}/_{2}$" rebars; horizontal — $^{5}/_{16}$" ties @6" pitch; cover — 1"	21 tons	69 min			7	1,2	1

Notes:
1. Collapse.
2. British test.

FIGURE O.4.5.20 Reinforced Concrete Columns with Minimum Dimension 10 in. (250 mm) to Less Than 12 in. (300 mm).

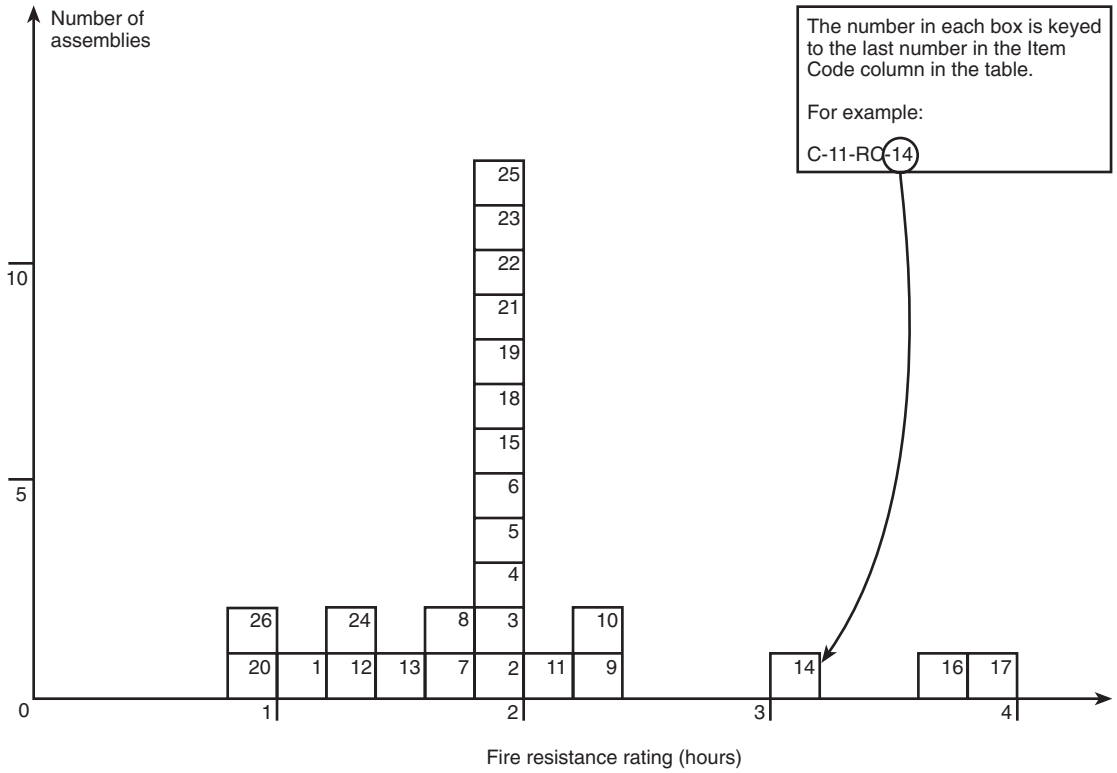

Copyright National Fire Protection Association
Provided by IHS under license with NFPA
No reproduction or networking permitted without license from IHS
Not for Resale

Table O.4.5.20 Reinforced Concrete Columns Minimum Dimension 10" (250 mm) to Less Than 12" (300 mm)

Item Code	Minimum Dimension	Construction Details	Performance		Reference Number			Notes	Rec Hours
			Load	Time	Pre-BMS-92	BMS-92	Post-BMS-92		
C-10-RC-1	10"	10" square columns; aggregate concrete (4260 psi); reinforcement: vertical four $1^1/_4$" rebars; horizontal $^3/_8$" ties @ 6" pitch; cover $1^1/_4$"	92.2 tons	1 hr 2 min			7	1	1
C-10-RC-2	10"	10" square columns; aggregate concrete (2325 psi); reinforcement: vertical four $^1/_2$" rebars; horizontal $^5/_{16}$" ties @ 6" pitch; cover 1"	46.7 tons	1 hr 52 min			7	1	$1^3/_4$
C-10-RC-3	10"	10" square columns; aggregate concrete (5370 psi); reinforcement: vertical four $^1/_2$" rebars; horizontal $^5/_{16}$" ties @ 6" pitch; cover 1"	46.5 tons	2 hr			7	2,3,11	2
C-10-RC-4	10"	10" square columns; aggregate concrete (5206 psi); reinforcement: vertical four $^1/_2$" rebars; horizontal $^5/_{16}$" ties @ 6" pitch; cover 1"	46.5 tons	2 hr			7	2,7	2
C-10-RC-5	10"	10" square columns; aggregate concrete (5674 psi); reinforcement: vertical four $^1/_2$" rebars; horizontal $^5/_{16}$" ties @ 6" pitch; cover 1"	46.7 tons	2 hr			7	1	2
C-10-RC-6	10"	10" square columns; aggregate concrete (5150 psi); reinforcement: vertical four $1^1/_2$" rebars; horizontal $^5/_{16}$" ties @ 6" pitch; cover 1"	66 tons	1 hr 43 min			7	1	$1^3/_4$
C-10-RC-7	10"	10" square columns; aggregate concrete (5580 psi); reinforcement: vertical four $^1/_2$" rebars; horizontal $^5/_{16}$" ties @ 6" pitch; 1" cover	62.5 tons	1 hr 38 min			7	1	$1^1/_2$
C-10-RC-8	10"	10" square columns; aggregate concrete (4080 psi); reinforcement: vertical four $^1/_8$" rebars; horizontal $^5/_{16}$" ties @ 6" pitch; $1^1/_8$" cover	72.8 tons	1 hr 48 min			7	1	$^1/_4$
C-10-RC-9	10"	10" square columns; aggregate concrete (2510 psi); reinforcement: vertical four $^1/_2$" rebars; horizontal $^5/_{16}$" ties @ 6" pitch; cover 1"	72.8 tons	1 hr 48 min			7	1	$2^1/_4$
C-10-RC-10	10"	10" square columns; aggregate concrete (2170 psi); reinforcement: vertical four $^1/_2$" rebars; horizontal $^5/_{16}$" ties @ 6" pitch; cover 1"	45 tons	2 hr 14 min			7	1	$2^1/_4$
C-10-RC-11	10"	10" square columns; gravel aggregate concrete (4015 psi); reinforcement: vertical four $^1/_2$" rebars; horizontal $^5/_{16}$" ties @ 6" pitch; cover 1"	46.5 tons	2 hr 6 min			7	1	2
C-11-RC-12	11"	11" square columns; gravel aggregate concrete (4150 psi); reinforcement: vertical four $1^1/_4$" rebars; horizontal $^3/_8$" ties @ $7^1/_2$" pitch; cover $1^1/_2$"	61 tons	1 hr 23 min			7	1	$1^1/_4$
C-11-RC-13	11"	11" square columns; gravel aggregate concrete (4380 psi); reinforcement-vertical four $1^1/_4$" rebars; horizontal $^3/_8$" ties @ $7^1/_2$" pitch; cover $1^1/_2$"	61 tons	1 hr 26 min			7	1	$1^1/_4$

(Sheet 1 of 3)

Copyright National Fire Protection Association
Provided by IHS under license with NFPA
No reproduction or networking permitted without license from IHS
Not for Resale

Table O.4.5.20 Reinforced Concrete Columns Minimum Dimension 10" (250 mm) to Less Than 12" (300 mm) *(Continued)*

Item Code	Minimum Dimension	Construction Details	Performance		Reference Number			Notes	Rec Hours
			Load	Time	Pre-BMS-92	BMS-92	Post-BMS-92		
C-11-RC-14	11"	11" square columns; gravel aggregate concrete (4140 psi); reinforcement: vertical four $1^1/_4$" rebars; horizontal $^3/_8$" ties @ $7^1/_2$" pitch; steel mesh around reinforcement; cover $1^1/_2$"	61 tons	3 hr 9 min			7	1	3
C-11-RC-15	11"	11" square columns; slag aggregate concrete (3690 psi); reinforcement: vertical four $1^1/_4$" rebar; horizontal $^3/_8$" ties @ $7^1/_2$" pitch; cover $1^1/_2$"	91 tons	2 hr			7	2-5	2
C-11-RC-16	11"	11" square columns; limestone aggregate concrete (5230 psi); reinforcement: vertical four $1^1/_4$" rebars; horizontal $^3/_8$" ties @ $7^1/_2$" pitch; cover $1^1/_2$"	91.5 tons	3 hr 41 min			7	1	$3^1/_2$
C-11-RC-17	11"	11" square columns; limestone aggregate concrete (5530 psi); reinforcement: vertical four $1^1/_4$" rebars; horizontal $^3/_8$" ties @ $7^1/_2$" pitch; cover $1^1/_2$"	91.5 tons	3 hr 47 min			7	1	$3^1/_2$
C-11-RC-18	11"	11" square columns; limestone aggregate concrete (5280 psi); reinforcement: vertical four $1^1/_4$" rebars; horizontal $^3/_8$" ties @ $7^1/_2$" pitch; cover $1^1/_2$"	91.5 tons	2 hr			7	2-4,6	2
C-11-RC-19	11"	11" square columns; limestone aggregate concrete (4180 psi); reinforcement: vertical four $^5/_8$" rebars; horizontal $^3/_8$" ties @ 7" pitch; cover $1^1/_2$"	71.4 tons	2 hr			7	2,7	2
C-11-RC-20	11"	11" square columns; gravel concrete (4530 psi); reinforcement: vertical four $^5/_8$" rebars; horizontal $^3/_8$" ties @ 7" pitch; cover $1^1/_2$" with $^1/_2$" plaster	58.8 tons	2 hr			7	2,3,9	$1^1/_4$
C-11-RC-21	11"	11" square columns; gravel concrete (3520 psi); reinforcement: vertical four $^5/_8$" rebars; horizontal $^3/_8$" ties @ 7" pitch; cover $1^1/_2$"	variable	1 hr 24 min			7	1,8	2
C-11-RC-22	11"	11" square columns; aggregate concrete (3710 psi); reinforcement: vertical four $^5/_8$" rebars; horizontal $^3/_8$" ties @ 7" pitch; cover $1^1/_2$"	58.8 tons	2 hr			7	2,3,10	2
C-11-RC-23	11"	11" square columns; aggregate concrete (3190 psi); reinforcement: vertical four $^5/_8$" rebars; horizontal $^3/_8$" ties @ 7" pitch; cover $1^1/_2$"	58.8 tons	2 hr			7	2,3,10	2
C-11-RC-24	11"	11" square columns; aggregate concrete (4860 psi); reinforcement: vertical four $^5/_8$" rebars; horizontal $^3/_8$" ties @ 7" pitch; cover $1^1/_2$"	86.1 tons	1 hr 20 min			7	1	$1^1/_3$
C-11-RC-25	11"	11" square columns; aggregate concrete (4850 psi); reinforcement: vertical four $^5/_8$" rebars; horizontal $^3/_8$" ties @ 7" pitch; cover $1^1/_2$"	58.8 tons	1 hr 59 min			7	1	$1^3/_4$

(Sheet 2 of 3)

Copyright National Fire Protection Association
Provided by IHS under license with NFPA
No reproduction or networking permitted without license from IHS
Not for Resale

Table O.4.5.20 Reinforced Concrete Columns Minimum Dimension 10" (250 mm) to Less Than 12" (300 mm) ***(Continued)***

Item Code	Minimum Dimension	Construction Details	Performance		Reference Number			Notes	Rec Hours
			Load	Time	Pre-BMS-92	BMS-92	Post-BMS-92		
C-11-RC-26	11"	11" square columns; aggregate concrete (3834 psi); reinforcement: vertical four $^5/_8$" rebars; horizontal $^5/_{16}$" ties @ $4^1/_2$" pitch; cover $1^1/_2$"	71.4 tons	53 min			7	1	$^3/_4$

(Sheet 3 of 3)

Notes:
1. Failure mode — collapse.
2. Passed 2-hr fire exposure.
3. Passed hose stream test.
4. Reloaded effectively after 48 hours but collapsed at load in excess of original test load.
5. Failing load was 150 tons.
6. Failing load was 112 tons.
7. Failed during hose stream test.
8. Range of load 58.8 tons (initial) to 92 tons (92 min.) to 60 tons (80 min.).
9. Collapsed at 44 tons in reload after 96 hours.
10. Withstood reload after 72 hours.
11. Collapsed on reload after 48 hours.

Table O.4.5.21 Reinforced Concrete Columns Minimum Dimension 12" (300 mm) to Less Than 14" (350 mm)

Item Code	Minimum Dimension	Construction Details	Performance		Reference Number			Notes	Rec Hours
			Load	Time	Pre-BMS-92	BMS-92	Post-BMS-92		
C-12-RC-1	12"	12" square columns; gravel aggregate concrete (2647 psi); reinforcement: vertical four $^5/_8$" rebars; horizontal $^5/_{16}$" ties @ $4^1/_2$" pitch; cover 2"	78.2 tons	38 min		1	7	1	$^1/_2$
C-12-RC-2	12"	Reinforced columns with $1^1/_2$" concrete outside of reinforced steel; gross diameter or side of column 12"; group I, column A		6 hr		1		2,3	6
C-12-RC-3	12"	Description as per C-12-RC-2; Group I, Column B		4 hr		1		2,3	4
C-12-RC-4	12"	Description as per C-12-RC-2; Group II, Column A		4 hr		1		2,3	4
C-12-RC-5	12"	Description as per C-12-RC-2; Group II, Column B		2 hr 30 min		1		2,3	$2^1/_2$
C-12-RC-6	12"	Description as per C-12-RC-2; Group III, Column A		6 hr		1		2,3	3
C-12-RC-7	12"	Description as per C-12-RC-2; Group III, Column B		2 hr		1		2,3	2
C-12-RC-8	12"	Description as per C-12-RC-2; Group IV, Column A		2 hr		1		2,3	2
C-12-RC-9	12"	Description as per C-12-RC-2; Group IV, Column B		1 hr 30 min		1		2,3	$1^1/_2$

Notes:
1. Failure mode — unspecified structural.
2. Group I — includes concrete having calcareous aggregate containing a combined total of not more than 10 percent of quartz, chert, and flint for the coarse aggregate.

Group II — includes concrete having trap-rock aggregate applied without metal ties and also concrete having cinder, sandstone, or granite aggregate, if held in place with wire mesh or expanded metal having not larger than 4-in. mesh, weighing not less than 1.7 lb/yd^2, placed not more than 1 in. from the surface of the concrete.

Group III — includes concrete having cinder, sandstone, or granite aggregate tied with No. 5 gauge steel wire, wound spirally over the column section on a pitch of 8 in., or equivalent ties, and concrete having siliceous aggregates containing a combined total of 60 percent or more of quartz, chert, and flint, if held in place with wire mesh or expanded metal having not larger than 4-in. mesh, weighing not less than 1.7 lb/yd^2 placed not more than 1 in. from the surface of the concrete.

Group IV — includes concrete having siliceous aggregates containing a combined total of 60 percent or more of quartz, chert, and flint, and tied with No. 5 gauge steel wire wound spirally over the column section on a pitch of 8 in., or equivalent ties.

3. Groupings of aggregates and ties are the same as for structural steel columns protected solidly with concrete, the ties to be placed over the vertical reinforcing bars and the mesh, where required, to be placed within 1 in. from the surface of the column.

Column A — working loads are assumed as carried by the area of the column inside of the lines circumscribing the reinforcing steel.

Column B — working loads are assumed as carried by the gross area of the column.

Copyright National Fire Protection Association
Provided by IHS under license with NFPA
No reproduction or networking permitted without license from IHS
Not for Resale

Table O.4.5.22 Reinforced Concrete Columns Minimum Dimension 14" (350 mm) to Less Than 16" (400 mm)

Item Code	Minimum Dimension	Construction Details	Performance		Reference Number			Notes	Rec Hours
			Load	Time	Pre-BMS-92	BMS-92	Post-BMS-92		
C-14-RC-1	14"	14" square columns; gravel aggregate concrete (4295 psi); reinforcement: vertical four $^3/_4$" rebars; horizontal $^1/_4$" ties @ 9" pitch; cover $1^1/_2$"	86 tons	1 hr 22 min			7	1	$1^1/_4$
C-14-RC-2	14"	Reinforced columns with $1^1/_2$" concrete outside reinforcing steel; gross diameter or side of column 14"; Group I, Column A		7 hr		1		2,3	7
C-14-RC-3	14"	Description as per C-14-RC-2; Group II, Column B		5 hr		1		2,3	5
C-14-RC-4	14"	Description as per C-14-RC-2; Group III, Column A		5 hr		1		2,3	5
C-14-RC-5	14"	Description as per C-14-RC-2; Group IV, Column B		3 hr 30 min		1		2,3	$3^1/_2$
C-14-RC-6	14"	Description as per C-14-RC-2; Group III, Column A		4 hr		1		2,3	4
C-14-RC-7	14"	Description as per C-14-RC-2; Group III, Column B		2 hr 30 min		1		2,3	$2^1/_2$
C-14-RC-8	14"	Description as per C-14-RC-2; Group IV, Column A		2 hr 30 min		1		2,3	$2^1/_2$
C-14-RC-9	14"	Description as per C-14-RC-2; Group IV, Column B		1 hr 30 min		1		2,3	$1^1/_2$

Notes:

1. Failure mode — main rebars buckled between links at various points.
2. Group I — includes concrete having calcareous aggregate containing a combined total of not more than 10 percent of quartz, chert, and flint for the coarse aggregate.

Group II — includes concrete having trap-rock aggregate applied without metal ties and also concrete having cinder, sandstone, or granite aggregate, if held in place with wire mesh or expanded metal having not larger than 4-in. mesh, weighing not less than 1.7 lb/yd^2, placed not more than 1 in. from the surface of the concrete.

Group III — includes concrete having cinder, sandstone, or granite aggregate tied with No. 5 gauge steel wire, wound spirally over the column section on a pitch of 8 in., or equivalent ties, and concrete having siliceous aggregates containing a combined total of 60 percent or more of quartz, chert, and flint, if held in place with wire mesh or expanded metal having not larger than 4-in. mesh, weighing not less than 1.7 lb/yd^2 placed not more than 1 in. from the surface of the concrete.

Group IV — includes concrete having siliceous aggregates containing a combined total of 60 percent or more of quartz, chert, and flint, and tied with No. 5 gauge steel wire wound spirally over the column section on a pitch of 8 in., or equivalent ties.

3. Groupings of aggregates and ties are the same as for structural steel columns protected solidly with concrete, the ties to be placed over the vertical reinforcing bars and the mesh, where required, to be placed within 1 in. from the surface of the column.

Column A — working loads are assumed as carried by the area of the column inside of the lines circumscribing the reinforcing steel.

Column B — working loads are assumed as carried by the gross area of the column.

Copyright National Fire Protection Association
Provided by IHS under license with NFPA
No reproduction or networking permitted without license from IHS
Not for Resale

FIGURE O.4.5.23 Reinforced Concrete Columns with Minimum Dimension 16 in. (400 mm) to Less Than 18 in. (450 mm).

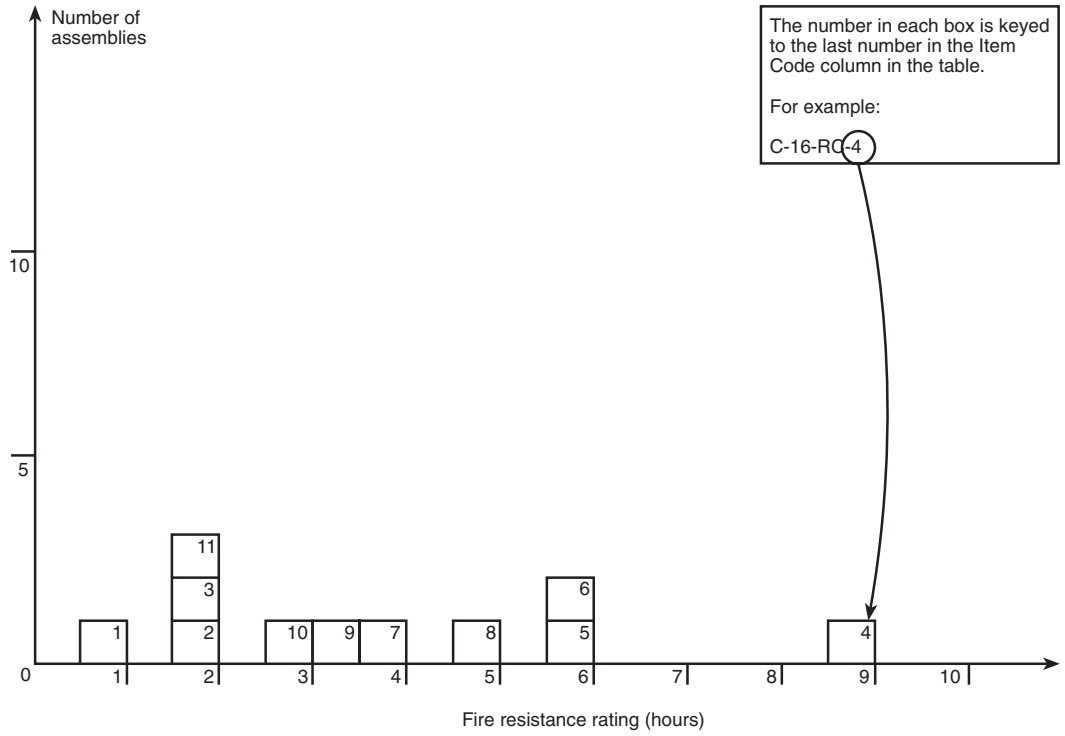

Table O.4.5.23 Reinforced Concrete Columns Minimum Dimension 16" (400 mm) to Less Than 18" (450 mm)

Item Code	Minimum Dimension	Construction Details	Performance		Reference Number			Notes	Rec Hours
			Load	Time	Pre-BMS-92	BMS-92	Post-BMS-92		
C-16-RC-1	16"	16" square columns; gravel aggregate concrete (4550 psi); reinforcement: vertical eight $1^3/_8$" rebars; horizontal $^5/_{16}$" ties @ 6" pitch linking center rebars of each face forming a smaller square in column cross section	237 tons	1 hr			7	1-3	1
C-16-RC-2	16"	16" square columns; gravel aggregate concrete (3360 psi); reinforcement: vertical eight $1^3/_8$" rebars; horizontal $^5/_{16}$" ties @ 6" pitch; cover $1^3/_8$"	210	2 hr			7	2,4-6	2
C-16-RC-3	16"	16" square columns; gravel aggregate concrete (3980 psi); reinforcement: vertical four $^7/_8$" rebars; horizontal $^3/_8$" ties @ 6" pitch; cover 1"	123.5 tons	2 hr			7	2,4,7	2
C-16-RC-4	16"	Reinforced concrete columns with $1^1/_2$" concrete outside reinforcing steel; gross diameter or side of column: 16"; Group I, Column A		9 hr		1		8,9	9
C-16-RC-5	16"	Description as per C-16-RC-4; Group I, Column B		6 hr		1		8,9	6
C-16-RC-6	16"	Description as per C-16-RC-4; Group II, Column A		6 hr		1		8,9	6
C-16-RC-7	16"	Description as per C-16-RC-4; Group II, Column B		4 hr		1		8,9	4

(Sheet 1 of 2)

Copyright National Fire Protection Association
Provided by IHS under license with NFPA
No reproduction or networking permitted without license from IHS
Not for Resale

Table O.4.5.23 Reinforced Concrete Columns Minimum Dimension 16" (400 mm) to Less Than 18" (450 mm) *(Continued)*

Item Code	Minimum Dimension	Construction Details	Performance		Reference Number			Notes	Rec Hours
			Load	Time	Pre-BMS-92	BMS-92	Post-BMS-92		
C-16-RC-8	16"	Description as per C-16-RC-4; Group III, Column A		5 hr		1		8,9	5
C-16-RC-9	16"	Description as per C-16-RC-4; Group III, Column B		3 hr 30 min		1		8,9	$3^1/_2$
C-16-RC-10	16"	Description as per C-16-RC-4; Group IV, Column A		3 hr		1		8,9	3
C-16-RC-11	16"	Description as per C-16-RC-4; Group IV, Column B		2 hr		1		8,9	2

(Sheet 2 of 2)

Notes:
1. Column passed 1-hr fire test.
2. Column passed hose stream test.
3. No reload specified.
4. Column passed 2-hr fire test.
5. Column reloaded successfully after 24 hours.
6. Reinforcing details same as C-16-RC-1.
7. Column passed reload after 72 hours.
8. Group I — includes concrete having calcareous aggregate containing a combined total of not more than 10 percent of quartz, chert, and flint for the coarse aggregate.
Group II — includes concrete having trap-rock aggregate applied without metal ties and also concrete having cinder, sandstone, or granite aggregate, if held in place with wire mesh or expanded metal having not larger than 4-in. mesh, weighing not less than 1.7 lb/yd^2, placed not more than 1 in. from the surface of the concrete.
Group III — includes concrete having cinder, sandstone, or granite aggregate tied with No. 5 gauge steel wire, wound spirally over the column section on a pitch of 8 in., or equivalent ties, and concrete having siliceous aggregates containing a combined total of 60 percent or more of quartz, chert, and flint, if held in place with wire mesh or expanded metal having not larger than 4-in. mesh, weighing not less than 1.7 lb/yd^2 placed not more than 1 in. from the surface of the concrete.
Group IV — includes concrete having siliceous aggregates containing a combined total of 60 percent or more of quartz, chert, and flint, and tied with No. 5 gauge steel wire wound spirally over the column section on a pitch of 8 in., or equivalent ties.
9. Groupings of aggregates and ties are the same as for structural steel columns protected solidly with concrete, the ties to be placed over the vertical reinforcing bars and the mesh, where required, to be placed within 1 in. from the surface of the column.
Column A — working loads are assumed as carried by the area of the column inside of the lines circumscribing the reinforcing steel.
Column B — working loads are assumed as carried by the gross area of the column.

Table O.4.5.24 Reinforced Concrete Columns Minimum Dimension 18" (450 mm) to Less Than 20" (500 mm)

Item Code	Minimum Dimension	Construction Details	Performance		Reference Number			Notes	Rec Hours
			Load	Time	Pre-BMS-92	BMS-92	Post-BMS-92		
C-18-RC-1	18"	Reinforced concrete columns with $1^1/_2$" concrete outside reinforcing steel; gross diameter or side of column: 18"; Group I, Column A		11 hr		1		1,2	11
C-18-RC-2	18"	Description as per C-18-RC-1; Group I, Column B		8 hr		1		1,2	8
C-18-RC-3	18"	Description as per C-18-RC-1; Group II, Column A		7 hr		1		1,2	7
C-18-RC-4	18"	Description as per C-18-RC-1; Group II, Column B		5 hr		1		1,2	5
C-18-RC-5	18"	Description as per C-18-RC-1; Group III, Column A		6 hr		1		1,2	6
C-18-RC-6	18"	Description as per C-18-RC-1; Group III, Column B		4 hr		1		1,2	4

(Sheet 1 of 2)

Copyright National Fire Protection Association
Provided by IHS under license with NFPA
No reproduction or networking permitted without license from IHS
Not for Resale

Table O.4.5.24 Reinforced Concrete Columns Minimum Dimension 18" (450 mm) to Less Than 20" (500 mm) ***(Continued)***

Item Code	Minimum Dimension	Construction Details	Performance		Reference Number			Notes	Rec Hours
			Load	Time	Pre-BMS-92	BMS-92	Post-BMS-92		
C-18-RC-7	18"	Description as per C-18-RC-1; Group IV, Column A		3 hr 30 min		1		1,2	$3^1/_2$
C-16-RC-8	18"	Description as per C-18-RC-1; Group IV, Column B		2 hr 30 min		1		1,2	$2^1/_2$

(Sheet 2 of 2)

Notes:
1. Group I — includes concrete having calcareous aggregate containing a combined total of not more than 10 percent of quartz, chert, and flint for the coarse aggregate.
Group II — includes concrete having trap-rock aggregate applied without metal ties and also concrete having cinder, sandstone, or granite aggregate, if held in place with wire mesh or expanded metal having not larger than 4-in. mesh, weighing not less than 1.7 lb/yd^2 placed not more than 1 in. from the surface of the concrete.
Group III — includes concrete having cinder, sandstone, or granite aggregate tied with No. 5 gauge steel wire, wound spirally over the column section on a pitch of 8 in., or equivalent ties, and concrete having siliceous aggregates containing a combined total of 60 percent or more of quartz, chert, and flint, if held in place with wire mesh or expanded metal having not larger than 4-in. mesh, weighing not less than 1.7 lb/yd^2 placed not more than 1 in. from the surface of the concrete.
Group IV — includes concrete having siliceous aggregates containing a combined total of 60 percent or more of quartz, chert, and flint, and tied with No. 5 gauge steel wire wound spirally over the column section on a pitch of 8 in., or equivalent ties.
2. Groupings of aggregates and ties are the same as for structural steel columns protected solidly with concrete, the ties to be placed over the vertical reinforcing bars and the mesh, where required, to be placed within 1 in. from the surface of the column.
Column A — working loads are assumed as carried by the area of the column inside of the lines circumscribing the reinforcing steel.
Column B — working loads are assumed as carried by the gross area of the column.

FIGURE O.4.5.25 Reinforced Concrete Columns with Minimum Dimension 20 in. (500 mm) to Less Than 22 in. (550 mm).

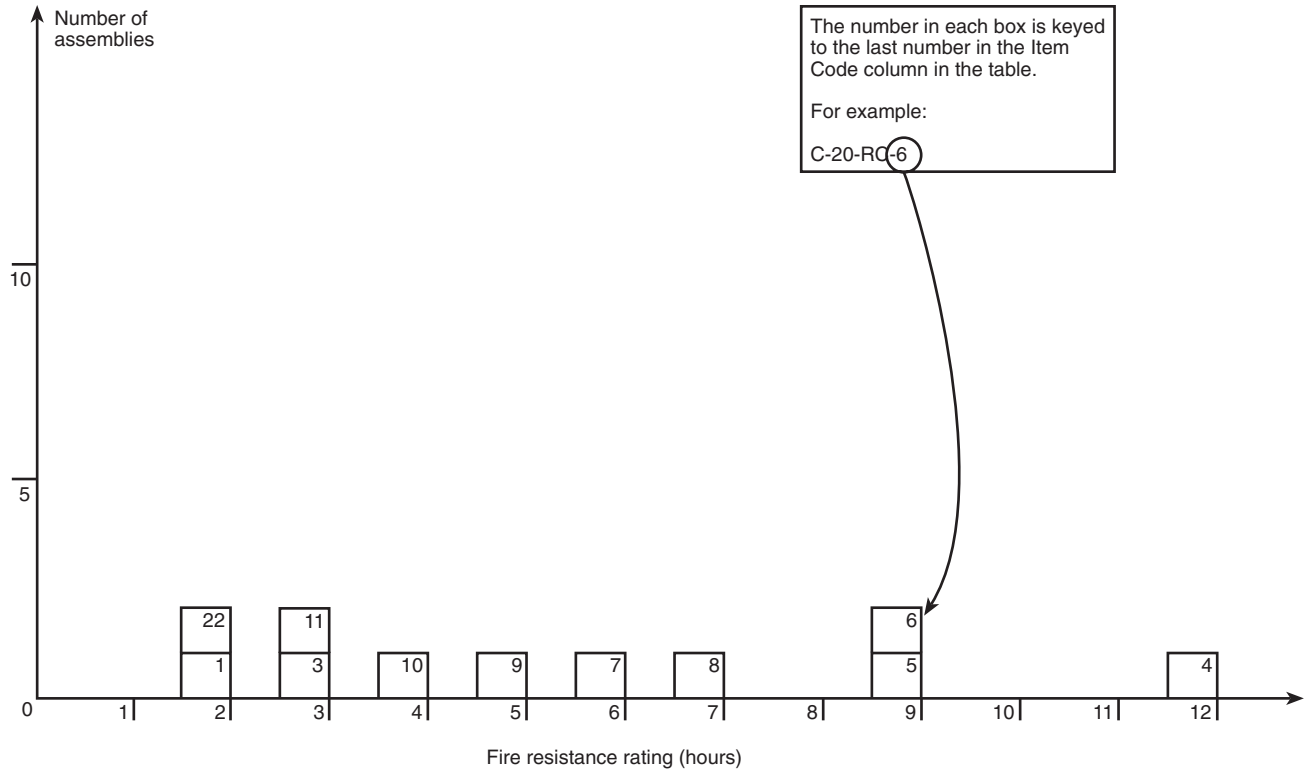

Copyright National Fire Protection Association
Provided by IHS under license with NFPA
No reproduction or networking permitted without license from IHS
Not for Resale

Table O.4.5.25 Reinforced Concrete Columns Minimum Dimension 20" (500 mm) to Less Than 22" (550 mm)

Item Code	Minimum Dimension	Construction Details	Performance		Reference Number			Notes	Rec Hours
			Load	Time	Pre-BMS-92	BMS-92	Post-BMS-92		
C-20-RC-1	20"	20" square columns; gravel aggregate concrete (6690 psi); reinforcement: vertical four $1^3/_4$" rebars; horizontal $^3/_8$" wire @ 6" pitch; cover $1^3/_4$"	367 tons	2 hr			7	1-3	2
C-20-RC-2	20"	20" square columns; gravel aggregate concrete (4330 psi); reinforcement: vertical four $1^3/_4$" rebars; horizontal $^3/_8$" ties @ 6" pitch; cover $1^3/_4$"	327 tons	2 hr			7	1,2,4	2
C-20-RC-3	$20^1/_4$"	$20^1/_4$" square columns; gravel aggregate concrete (4230 psi); reinforcement: vertical four $1^1/_8$" rebars; horizontal $^3/_8$" wire @ 5" pitch; cover $1^1/_8$"	199 tons	2 hr 56 min			7	5	$2^3/_4$
C-20-RC-4	20"	Reinforced concrete columns with $1^1/_2$" concrete outside of reinforcing steel; gross diameter or side of column: 20"; Group I, Column A		12 hr		1		6,7	12
C-20-RC-5	20"	Description as per C-20-RC-4; Group I, Column B		9 hr		1		6,7	9
C-20-RC-6	20"	Description as per C-20-RC-4; Group II, Column A		9 hr		1		6,7	9
C-20-RC-7	20"	Description as per C-20-RC-4; Group II, Column B		6 hr		1		6,7	6
C-20-RC-8	20"	Description as per C-20-RC-4; Group III, Column A		7 hr		1		6,7	7
C-20-RC-9	20"	Description as per C-20-RC-4; Group III, Column B		5 hr		1		6,7	5
C-20-RC-10	20"	Description as per C-20-RC-4; Group IV, Column A		4 hr		1		6,7	4
C-20-RC-11	20"	Description as per C-20-RC-4; Group IV, Column B		3 hr		1		6,7	3

Notes:
1. Passed 2-hr fire test.
2. Passed hose stream test.
3. Failed during reload at 300 tons.
4. Passed reload after 72 hours.
5. Failure mode — collapse.
6. Group I — includes concrete having calcareous aggregate containing a combined total of not more than 10 percent of quartz, chert, and flint for the coarse aggregate.

Group II — includes concrete having trap-rock aggregate applied without metal ties and also concrete having cinder, sandstone, or granite aggregate, if held in place with wire mesh or expanded metal having not larger than 4-in. mesh, weighing not less than 1.7 lb/yd^2, placed not more than 1 in. from the surface of the concrete.

Group III — includes concrete having cinder, sandstone, or granite aggregate tied with No. 5 gauge steel wire, wound spirally over the column section on a pitch of 8 in., or equivalent ties, and concrete having siliceous aggregates containing a combined total of 60 percent or more of quartz, chert, and flint, if held in place with wire mesh or expanded metal having not larger than 4-in. mesh, weighing not less than 1.7 lb/yd^2 placed not more than 1 in. from the surface of the concrete.

Group IV — includes concrete having siliceous aggregates containing a combined total of 60 percent or more of quartz, chert, and flint, and tied with No. 5 gauge steel wire wound spirally over the column section on a pitch of 8 in., or equivalent ties.

7. Groupings of aggregates and ties are the same as for structural steel columns protected solidly with concrete, the ties to be placed over the vertical reinforcing bars and the mesh, where required, to be placed within 1 in. from the surface of the column.

Column A — working loads are assumed as carried by the area of the column inside of the lines circumscribing the reinforcing steel.

Column B — working loads are assumed as carried by the gross area of the column.

Copyright National Fire Protection Association
Provided by IHS under license with NFPA
No reproduction or networking permitted without license from IHS
Not for Resale

Table O.4.5.26 Hexagonal Reinforced Minimum Dimension 12" (300 mm) to Less Than 14" (350 mm)

Item Code	Minimum Dimension	Construction Details	Performance		Reference Number			Notes	Rec Hours
			Load	Time	Pre-BMS-92	BMS-92	Post-BMS-92		
C-12-HRC-1	12"	12" hexagonal columns; gravel aggregate concrete (4420 psi); vertical reinforcement: eight $^1/_2$" rebars; horizontal reinforcement: helical $^5/_{16}$" winding @ $1^1/_2$" pitch; cover $^1/_2$"	88 tons	58 min			7	1	$^3/_4$
C-12-HRC-2	12"	12" hexagonal columns; gravel aggregate concrete (3460 psi); vertical reinforcement: eight $^1/_2$" rebars; horizontal reinforcement: $^5/_{16}$" helical winding @ $1^1/_2$" pitch; cover $^1/_2$"	78.7 tons	1 hr			7	2	1

Notes:
1. Failure mode — collapse.
2. Test stopped at 1 hour.

Table O.4.5.27 Hexagonal Reinforced Concrete Columns Minimum Dimension 14" (350 mm) to Less Than 16" (400 mm)

Item Code	Minimum Dimension	Construction Details	Performance		Reference Number			Notes	Rec Hours
			Load	Time	Pre-BMS-92	BMS-92	Post-BMS-92		
C-14-HRC-1	14"	14" hexagonal columns; gravel aggregate concrete (4970 psi); vertical reinforcement: eight $^1/_2$" rebars; horizontal reinforcement: $^5/_{16}$" helical winding @ 2" pitch; cover $^1/_2$"	90 tons	2 hr			7	1-3	2

Notes:
1. Withstood 2-hr fire test.
2. Withstood hose stream test.
3. Withstood reload after 48 hours.

Table O.4.5.28 Hexagonal Reinforced Concrete Columns Diameter — 16" (400 mm) to Less Than 18" (450 mm)

Item Code	Minimum Dimension	Construction Details	Performance		Reference Number			Notes	Rec Hours
			Load	Time	Pre-BMS-92	BMS-92	Post-BMS-92		
C-16-HRC-1	16"	16" hexagonal columns; gravel concrete (6320 psi); vertical reinforcement: eight $^5/_8$" rebars; horizontal reinforcement: $^5/_{16}$" helical winding @ $^3/_4$" pitch; cover $^1/_2$"	140 tons	1 hr 55 min			7	1	$1^3/_4$
C-16-HRC-2	16"	16" hexagonal columns; gravel aggregate concrete (5580 psi); vertical reinforcement: eight $^5/_8$" rebars; horizontal reinforcement $^5/_{16}$" helical winding @ $1^3/_4$" pitch; cover $^1/_2$"	124 tons	2 hr			7	2	2

Notes:
1. Failure mode — collapse.
2. Failed on furnace removal.

Copyright National Fire Protection Association
Provided by IHS under license with NFPA
No reproduction or networking permitted without license from IHS
Not for Resale

Table O.4.5.29 Hexagonal Reinforced Concrete Columns Diameter — 20" (500 mm) to Less Than 22" (550 mm)

Item Code	Minimum Dimension	Construction Details	Performance		Reference Number			Notes	Rec Hours
			Load	Time	Pre-BMS-92	BMS-92	Post-BMS-92		
C-20-HRC-1	20"	20" hexagonal columns; gravel concrete (6080 psi); vertical reinforcement: $^{3}/_{4}$" rebar; horizontal reinforcement: $^{5}/_{16}$" helical winding @ $1^{3}/_{4}$" pitch; cover $^{1}/_{2}$"	211 tons	2 hr			7	1	2
C-20-HRC-2	20"	20" hexagonal columns; gravel concrete (5080 psi); vertical reinforcement: $^{3}/_{4}$" rebar; horizontal reinforcement: $^{5}/_{16}$" wire @ $1^{3}/_{4}$" pitch; cover $^{1}/_{2}$"	184 tons	2 hr 15 min			7	2,3,4	$2^{1}/_{4}$

Notes:
1. Column collapsed on furnace removal.
2. Passed $2^{1}/_{4}$-hr fire test.
3. Passed hose stream test.
4. Withstood reload after 48 hours.

Table O.4.5.30 Round Cast Iron Columns

Item Code	Minimum Dimension	Construction Details	Performance		Reference Number			Notes	Rec Hours
			Load	Time	Pre-BMS-92	BMS-92	Post-BMS-92		
C-7-CI-1	7" O.D.	Column: 0.6" min. thickness metal, unprotected	—	30 min		1			$^{1}/_{2}$
C-7-CI-2	7" O.D.	Column: 0.6" metal thickness concrete filled, outside unprotected	—	45 min		1			$^{3}/_{4}$
C-11-CI-3	11" O.D.	Column: 0.6" minimum metal thickness; protection: $1^{1}/_{2}$" portland cement plaster on high ribbed metal lath, $^{1}/_{2}$" broken air space	—	3 hr		1			3
C-11-CI-4	11" O.D.	Column: 0.6" min. metal thickness; protection: 2" concrete other than siliceous aggregate	—	2 hr 30 min		1			$2^{1}/_{2}$
C-12-CI-5	12.5" O.D.	Column: 7" O.D., 0.6" min. metal thickness; protection: 2" porous hollow tile, $^{3}/_{4}$" mortar between tile and column, outside wire ties	—	3 hr		1			3
C-7-CI-6	7.6" O.D.	Column: 7" I.D., $^{3}/_{10}$" min. thickness metal, concrete filled unprotected	—	30 min		1			$^{1}/_{2}$
C-8-CI-7	8.6" O.D.	Column: 8" I.D., $^{3}/_{10}$" min. thickness metal, concrete filled reinforced with four $3^{1}/_{2}$" × $^{3}/_{8}$" angles, in fill; unprotected outside	—	1 hr		1			1

Copyright National Fire Protection Association
Provided by IHS under license with NFPA
No reproduction or networking permitted without license from IHS
Not for Resale

FIGURE O.4.5.31 Steel Columns — Gypsum Encasements.

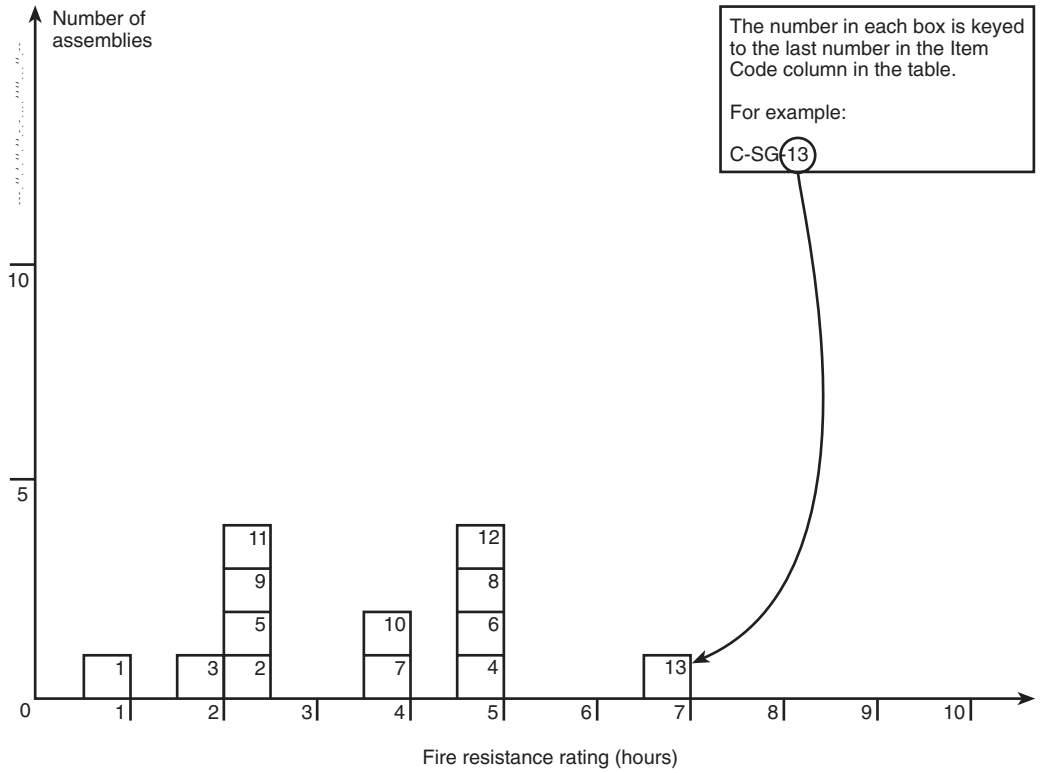

Table O.4.5.31 Steel Columns — Gypsum Encasements

Item Code	Minimum Area of Solid Material	Construction Details	Performance		Reference Number			Notes	Rec Hours
			Load	Time	Pre-BMS-92	BMS-92	Post-BMS-92		
C-SG-1	—	Steel protected with $^{3}/_{4}$" 1:3 sanded gypsum or 1" 1:2 $^{1}/_{2}$ portland cement plaster on wire or lath; one layer	—	1 hr		1			1
C-SG-2	—	Same as C-SG-1; two layers	—	2 hr 30 min		1			$2^{1}/_{2}$
C-SG-3	130 in.^{2}	2" solid blocks with wire mesh in horizontal joints, 1" mortar on flange, re-entrant space filled with block and mortar	—	2 hr		1			2
C-SG-4	150 in.^{2}	Same as C-130-SG-3 with $^{1}/_{2}$" sanded gypsum plaster	—	5 hr		1			5
C-SG-5	130 in.^{2}	2" solid blocks with wire mesh in horizontal joints, 1" mortar on flange, re-entrant space filled with gypsum concrete	—	2 hr 30 min		1			$2^{1}/_{2}$
C-SG-6	150 in.^{2}	Same as C-130-SG-5 with $^{1}/_{2}$" sanded gypsum plaster	—	5 hr		1			5
C-SG-7	300 in.^{2}	4" solid blocks with wire mesh in horizontal joints, 1" mortar on flange, re-entrant space filled with block and mortar	—	4 hr		1			4

(Sheet 1 of 2)

Copyright National Fire Protection Association
Provided by IHS under license with NFPA
No reproduction or networking permitted without license from IHS
Not for Resale

Table O.4.5.31 Steel Columns — Gypsum Encasements *(Continued)*

Item Code	Minimum Area of Solid Material	Construction Details	Performance		Reference Number			Notes	Rec Hours
			Load	Time	Pre-BMS-92	BMS-92	Post-BMS-92		
C-SG-8	300 in.^{2}	Same as C-300-SG-7 with re-entrant space filled with gypsum concrete	—	5 hr		1			5
C-SG-9	85 in.^{2}	2" solid blocks with cramps at horizontal joints, mortar on flange only at horizontal joints, re-entrant space not filled	—	2 hr 30 min		1			$2^1/_2$
C-SG-10	105 in.^{2}	Same as C-85-SG-9 with $^1/_2$" sanded gypsum plaster	—	4 hr		1			4
C-SG-11	95 in.^{2}	3" hollow blocks with cramps at horizontal joints, mortar on flange only at horizontal joints, re-entrant space not filled	—	2 hr 30 min		1			$2^1/_2$
C-SG-12	120 in.^{2}	Same as C-95-SG-11 with $^1/_2$" sanded gypsum plaster	—	5 hr		1			5
C-SG-13	130 in.^{2}	2" neat fibered gypsum re-entrant space filled poured solid and reinforced with 4" × 4" wire mesh $^1/_2$" sanded gypsum plaster	—	7 hr		1			7

(Sheet 2 of 2)

Table O.4.5.32 Timber Columns Minimum Dimension

Item Code	Minimum Dimension	Construction Details	Performance		Reference Number			Notes	Rec Hours
			Load	Time	Pre-BMS-92	BMS-92	Post-BMS-92		
C-11-TC-1	11"	With unprotected steel plate cap		30 min		1		1,2	$^1/_2$
C-11-TC-2	11"	With unprotected cast iron cap and pintle		45 min		1		1,2	$^3/_4$
C-11-TC-3	11"	With concrete or protected steel or cast iron cap		1 hr 15 min		1		1,2	$1^1/_4$
C-11-TC-4	11"	With $^3/_8$" gypsum wallboard over column and over cast iron or steel cap		1 hr 15 min		1		1,2	$1^1/_4$
C-11-TC-5	11"	With 1" portland cement plaster on wire lath over column and over cast iron or steel cap; $^3/_4$" air space		2 hr		1		1,2	2

Notes:
1. Minimum area: 120 in.^{2}
2. Type of wood: Long leaf pine or Douglas fir.

Table O.4.5.33 Steel Columns — Concrete Encasements Minimum Dimension Less Than 6" (150 mm)

Item Code	Minimum Dimension	Construction Details	Performance		Reference Number			Notes	Rec Hours
			Load	Time	Pre-BMS-92	BMS-92	Post-BMS-92		
C-5-SC-1	5"	5" × 6" outer dimensions; 4" × 3" × 10 lb - H beam; protection: gravel concrete (4900 psi) 6" × 4" — 13 SWG mesh	12 tons	1 hr 29 min			7	1	$1^1/_4$

Notes:
1. Failure mode — collapse.

Copyright National Fire Protection Association
Provided by IHS under license with NFPA
No reproduction or networking permitted without license from IHS
Not for Resale

Table O.4.5.34 Steel Columns — Concrete Encasements 6" (150 mm) to Less Than 8" (200 mm) Thick

Item Code	Minimum Dimension	Construction Details	Performance		Reference Number			Notes	Rec Hours
			Load	Time	Pre-BMS-92	BMS-92	Post-BMS-92		
C-7-SC-1	7"	7" × 8" column; 4" × 3" × 10" H beam; protection: brick-filled concrete (6220 psi); 6" × 4" mesh - 13 SWG; mesh 1" below column surface	12 tons	2 hr 46 min			7	1	3
C-7-SC-2	7"	7" × 8" column; 4" × 3" × 10 lb H beam; protection: gravel concrete (5140 psi); 6" × 4" 13 SWG; mesh 1" below surface	12 tons	3 hr 1 min			7	1	$2^3/_4$
C-7-SC-3	7"	7" × 8" column; 4" × 3" × 10 lb H beam; protection: concrete (4540 psi); 6" × 4" 13 SWG; mesh 1" below column surface	12 tons	3 hr 9 min			7	1	3
C-7-SC-4	7"	7" × 8" column; 4" × 3" × 10 lb H beam; protection: gravel concrete (5520 psi); 4" × 4" mesh; 16 SWG	12 tons	2 hr 50 min			7	1	$2^3/_4$

Notes:
1. Failure mode — collapse.

FIGURE O.4.5.35 Steel Columns — Concrete Encasements with Minimum Dimension 8 in. (200 mm) to Less Than 10 in. (250 mm).

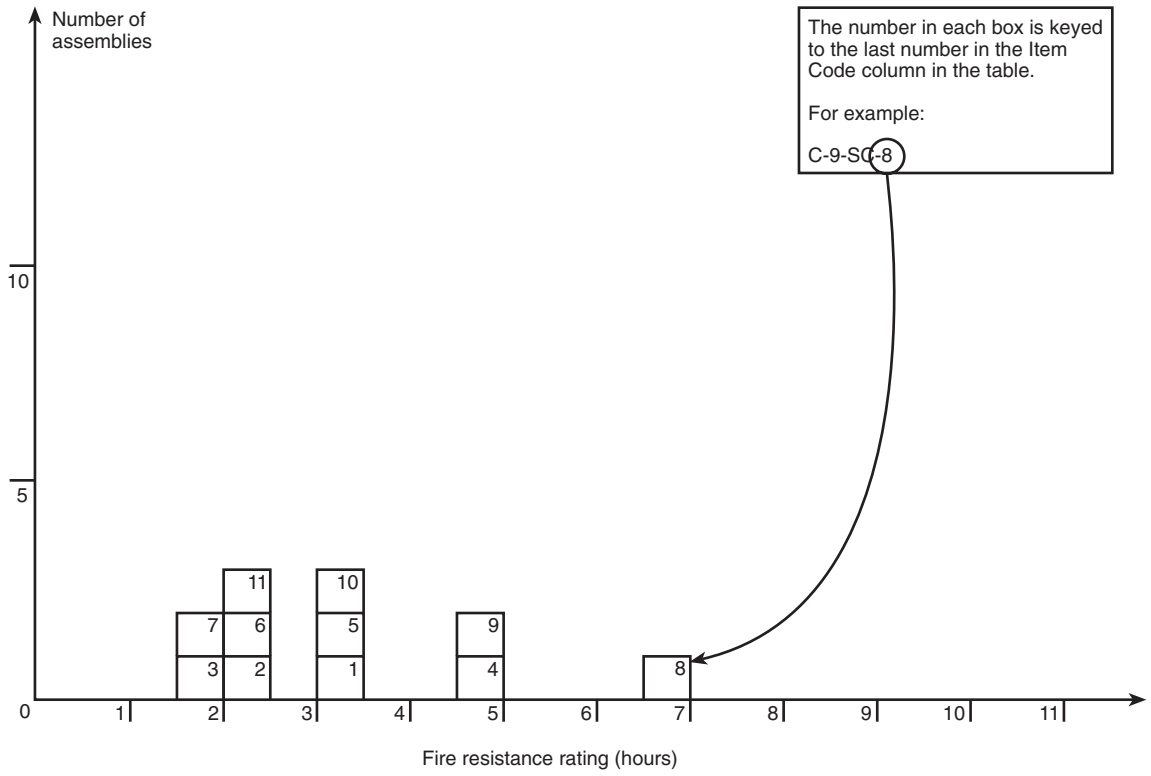

Copyright National Fire Protection Association
Provided by IHS under license with NFPA
No reproduction or networking permitted without license from IHS
Not for Resale

Table O.4.5.35 Steel Columns — Concrete Encasements Minimum Dimension 8" (200 mm) to Less Than 10" (250 mm)

Item Code	Minimum Dimension	Construction Details	Performance		Reference Number			Notes	Rec Hours
			Load	Time	Pre-BMS-92	BMS-92	Post-BMS-92		
C-8-SC-1	$8^1/_2$"	$8^1/_2$" × 10" column; 6" × $4^1/_2$" × 20 lb H beam; protection: gravel concrete (5140 psi) 6" × 4" 13 SWG mesh	39 tons	3 hr 8 min			7	1	3
C-8-SC-2	8"	8" × 10" column; 8" × 6" × 35 lb I beam; protection: gravel concrete (4240 psi) 4" × 6" mesh; 13 SWG with $^1/_2$" cover	90 tons	2 hr 1 min			7	1	2
C-8-SC-3	8"	8" × 10" concrete encased column; 8" × 6" × 35 lb H beam; protection: aggregate concrete (3750 psi) with 4" mesh; 16 SWG reinforcing $^1/_2$" below column surface	90 tons	1 hr 58 min			7	1	$1^3/_4$
C-8-SC-4	8"	6" × 6" steel column with 2" outside protection; Group I	—	5 hr		1		2	5
C-8-SC-5	8"	6" × 6" steel column with 2" outside protection; Group II	—	3 hr 30 min		1		2	$3^1/_2$
C-8-SC-6	8"	6" × 6" steel column with 2" outside protection; Group III	—	2 hr 30 min		1		2	$2^1/_2$
C-8-SC-7	8"	6" × 6" steel column with 2" outside protection; Group IV	—	1 hr 45 min		1		2	$1^3/_4$
C-9-SC-8	9"	6" × 6" steel column with 3" outside protection; Group I	—	7 hr		1		2	7
C-9-SC-9	9"	6" × 6" steel column with 3" outside protection; Group II	—	5 hr		1		2	5
C-9-SC-10	9"	6" × 6" steel column with 3" outside protection; Group III	—	30 hr 30 min		1		2	$3^1/_2$
C-9-SC-11	9"	6" × 6" steel column with 3" outside protection; Group IV	—	2 hr 30 min		1		2	$2^1/_2$

Notes:
1. Failure mode — collapse.
2. Group I — includes concrete having calcareous aggregate containing a combined total of not more than 10 percent of quartz, chert, and flint for the coarse aggregate.

Group II — includes concrete having trap-rock aggregate applied without metal ties and also concrete having cinder, sandstone, or granite aggregate, if held in place with wire mesh or expanded metal having not larger than 4-in. mesh, weighing not less than 1.7 lb/yd^2, placed not more than 1 in. from the surface of the concrete.

Group III — includes concrete having cinder, sandstone, or granite aggregate tied with No. 5 gauge steel wire, wound spirally over the column section on a pitch of 8 in., or equivalent ties, and concrete having siliceous aggregates containing a combined total of 60 percent or more of quartz, chert, and flint, if held in place with wire mesh or expanded metal having not larger than 4-in. mesh, weighing not less than 1.7 lb/yd^2 placed not more than 1 in. from the surface of the concrete.

Group IV — includes concrete having siliceous aggregates containing a combined total of 60 percent or more of quartz, chert, and flint, and tied with No. 5 gauge steel wire wound spirally over the column section on a pitch of 8 in., or equivalent ties.

Copyright National Fire Protection Association
Provided by IHS under license with NFPA
No reproduction or networking permitted without license from IHS
Not for Resale

FIGURE O.4.5.36 Steel Columns — Concrete Encasements with Minimum Dimension 10 in. (250 mm) to Less Than 12 in. (300 mm).

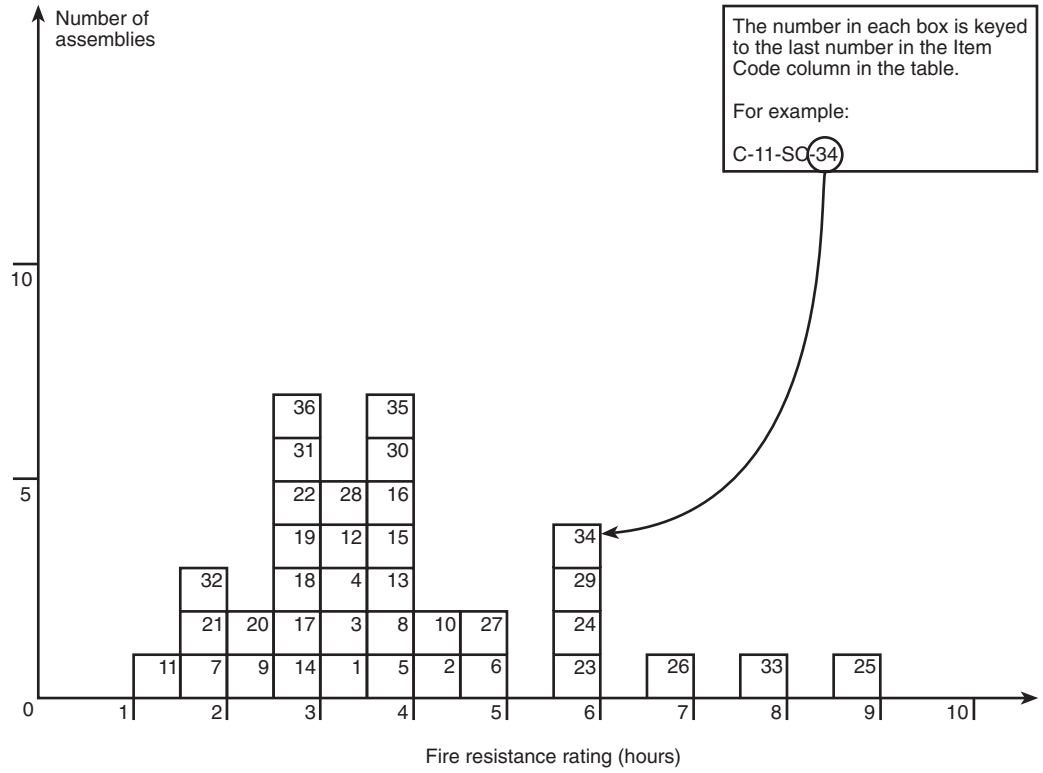

Table O.4.5.36 Steel Columns — Concrete Encasements Minimum Dimension 10" (250 mm) to Less Than 12" (300 mm)

Item Code	Minimum Dimension	Construction Details	Performance		Reference Number			Notes	Rec Hours
			Load	Time	Pre-BMS-92	BMS-92	Post-BMS-92		
C-10-SC-1	10"	10" × 12" concrete encased steel column; 8" × 6" × 35 lb H beam; protection: gravel aggregate concrete (3640 psi); mesh 6" × 4"; 13 SWG, 1" below column surface	90 tons	3 hr 7 min			7	1,2	3
C-10-SC-2	10"	Column: 10" × 16"; 8" × 6" × 35 lb H beam; protection: clay brick concrete (3630 psi); 6" × 4" mesh; 13 SWG, mesh 1" below column surface	90 tons	4 hr 6 min			7	2	4
C-10-SC-3	10"	Column: 10" × 12"; 8" × 6" × 35 lb H beam; protection: concrete of crushed stone and sand (3930 psi) 6" × 4" — 13 SWG mesh; 1" below column surface	90 tons	3 hr 17 min			7	2	$3^1/_4$
C-10-SC-4	10"	Column: 10" × 12"; 8" × 6" × 35 lb H beam; protection: concrete of crushed basalt and sand (4350 psi) 6" × 4" — 13 SWG mesh; 1" below column surface	90 tons	3 hr 22 min			7	2	$3^1/_3$

(Sheet 1 of 4)

Copyright National Fire Protection Association
Provided by IHS under license with NFPA
No reproduction or networking permitted without license from IHS
Not for Resale

Table O.4.5.36 Steel Columns — Concrete Encasements Minimum Dimension 10" (250 mm) to Less Than 12" (300 mm) ***(Continued)***

Item Code	Minimum Dimension	Construction Details	Performance		Reference Number			Notes	Rec Hours
			Load	Time	Pre-BMS-92	BMS-92	Post-BMS-92		
C-10-SC-5	10"	Column: 10" × 12"; 8" × 6" × 35 lb H beam; protection: concrete gravel aggregate (5570 psi) 6" × 4" mesh; 13 SWG	90 tons	3 hr 39 min			7	2	$3^1/_2$
C-10-SC-6	10"	Column: 10" × 16"; 8" × 6" × 35 lb I beam; protection: gravel concrete (4950 psi) 6" × 4" — 13 SWG; 1" below column surface	90 tons	4 hr 32 min			7	2	$4^1/_2$
C-10-SC-7	10"	10" × 12" concrete encased steel column; 8" × 6" × 35 lb H beam; protection: aggregate concrete (1370 psi) with 6" × 4" mesh; 13 SWG reinforcing 1" below column surface	90 tons	2 hr			7	3,4	2
C-10-SC-8	10"	10" × 12" concrete encased steel column; 8" × 6" × 35 lb H column; protection: aggregate concrete (4000 psi) with 13 SWG iron wire loosely wound around column @ 6" pitch about 2" beneath column surface	86 tons	3 hr 36 min			7	2	$3^1/_2$
C-10-SC-9	10"	10" × 12" concrete encased steel column; 8" × 6" × 35 lb H beam; protection: aggregate concrete (3290 psi); 2" cover minimum	86 tons	2 hr 8 min			7	2	2
C-10-SC-10	10"	10" × 14" concrete encased column; 8" × 6" × 35 lb H column; protection: crushed brick-filled concrete (5310 psi); with 6" × 4" mesh; 13 SWG reinforcement 1" beneath column surface	90 tons	4 hr 28 min			7	2	$4^1/_3$
C-10-SC-11	10"	10" × 12" concrete encased column; 8" × 6" × 35 lb H beam; protection: aggregate concrete (342 psi) with 6" × 4" mesh; 13 SWG reinforcements 1" below surface	90 tons	1 hr 2 min			7	2	1
C-10-SC-12	10"	10" × 12" concrete encased steel column; 8" × 6" × 35 lb H beam; protection: aggregate concrete (4480 psi) four $^3/_8$" vertical rebars @ H beam edges with $^3/_{16}$" spacers @ beam surface @ 3' pitch and $^3/_{16}$" binders @ 10" pitch; 2" concrete cover	90 tons	3 hr 2 min			7	2	3
C-10-SC-13	10"	10" × 12" concrete encased steel column; 8" × 6" × 35 lb H beams protection: aggregate concrete (5070 psi) with 6" × 4" mesh; 13 SWG reinforcing @ 6" beam sides wrapped and held by wire ties across (open) 8" beam face; reinforcements wrapped in 6" × 4" mesh; 13 SWG throughout with $^1/_2$" cover to column surface	90 tons	3 hr 59 min			7	2	$3^3/_4$
C-10-SC-14	10"	10" × 12" concrete encased steel column; 8" × 6" × 35 lb H column; protection: aggregate concrete (4410 psi) 6" × 4" mesh; 13 SWG reinforcement $1^1/_4$" below column surface; $^1/_2$" lime-cement plaster with $^3/_8$" gypsum plaster finish	90 tons	2 hr 50 min			7	2	$2^3/_4$

(Sheet 2 of 4)

Copyright National Fire Protection Association
Provided by IHS under license with NFPA
No reproduction or networking permitted without license from IHS
Not for Resale

Table O.4.5.36 Steel Columns — Concrete Encasements Minimum Dimension 10" (250 mm) to Less Than 12" (300 mm) ***(Continued)***

Item Code	Minimum Dimension	Construction Details	Performance		Reference Number			Notes	Rec Hours
			Load	Time	Pre-BMS-92	BMS-92	Post-BMS-92		
C-10-SC-15	10"	10" × 12" concrete encased steel column; 8" × 6" × 35 lb H beam; protection: crushed clay brick-filled concrete (4260 psi) with 6" × 4" mesh; 13 SWG reinforcing 1" below column surface	90 tons	3 hr 54 min			7	2	$3^3/_4$
C-10-SC-16	10"	10" × 12" concrete encased steel column; 8" × 6" × 35 lb H beam; protection: limestone aggregate concrete (4350 psi) 6" × 4" mesh; 13 SWG reinforcing 1" below column surface	90 tons	3 hr 54 min			7	2	$3^3/_4$
C-10-SC-17	10"	10" × 12" concrete encased steel column; 8" × 6" × 35 lb H beam; protection: limestone aggregate concrete (5300 psi) with 6" × 4"; 13 SWG wire mesh 1" below column surface	90 tons	3 hr			7	4,5	3
C-10-SC-18	10"	10" × 12" concrete encased steel column; 8" × 6" × 35 lb H beam; protection: limestone aggregate concrete (4800 psi) with 6" × 4"; 13 SWG mesh reinforcement 1" below surface	90 tons	3 hr			7	4,5	3
C-10-SC-19	10"	10" × 14" concrete encased steel column; 12" × 8" × 65 lb H beam; protection: aggregate concrete (3900 psi) 4" mesh; 16 SWG reinforcing $^1/_2$" below column surface	118 tons	2 hr 42 min			7	2	2
C-10-SC-20	10"	10" × 14" concrete encased steel column; 12" × 8" × 65 lb H beam; protection: aggregate concrete (4930 psi); 4" mesh; 16 SWG reinforcing $^1/_2$" below column surface	177 tons	2 hr 8 min			7	2	2
C-10-SC-21	$10^3/_8$"	$10^3/_8$" × $12^3/_8$" concrete encased steel column; 8" × 6" × 35 lb H beam; protection: aggregate concrete (835 psi) with 6" × 4" mesh; 13 SWG reinforcing $1^3/_{16}$" below column surface; $^3/_{16}$" gypsum plaster finish	90 tons	2 hr			7	3,4	2
C-11-SC-22	11"	11" × 13" concrete encased steel column; 8" × 6" × 35 lb H beam; protection: "open texture" brick-filled concrete (890 psi) with 6" × 4" mesh; 13 SWG reinforcing $1^1/_2$" below column surface; $^3/_8$" lime cement plaster; $^1/_8$" gypsum plaster finish	90 tons	3 hr			7	6,7	3
C-11-SC-23	11"	11" × 12" column; 4" × 3" × 10 lb H beam; gravel concrete (4550 psi); 6" × 4" — 13 SWG mesh reinforcing; 1" below column surface	12 tons	6 hr			7	7,8	6
C-11-SC-24	11"	11" × 12" column; 4" × 3" × 10 lb H beam; protection: gravel aggregate concrete (3830 psi) with 4" × 4" mesh; 16 SWG; 1" below column surface	16 tons	5 hr 32 min			7	2	$5^1/_2$
C-10-SC-25	10"	6" × 6" steel column with 4" outside protection; Group I	—	9 hr		1		9	9
C-10-SC-26	10"	Description as per C-1-SC-25; Group II	—	7 hr		1		9	7
C-10-SC-27	10"	Description as per C-1-SC-25; Group III	—	5 hr		1		9	5

(Sheet 3 of 4)

Copyright National Fire Protection Association
Provided by IHS under license with NFPA
No reproduction or networking permitted without license from IHS
Not for Resale

Table O.4.5.36 Steel Columns — Concrete Encasements Minimum Dimension 10" (250 mm) to Less Than 12" (300 mm) ***(Continued)***

Item Code	Minimum Dimension	Construction Details	Performance		Reference Number			Notes	Rec Hours
			Load	Time	Pre-BMS-92	BMS-92	Post-BMS-92		
C-10-SC-28	10"	Description as per C-1-SC-25; Group IV	—	3 hr 30 min		1		9	$3^1/_2$
C-10-SC-29	10"	8" × 8" steel column with 2" outside protection; Group I	—	6 hr		1		9	6
C-10-SC-30	10"	Description as per C-10-SC-29; Group II	—	4 hr		1		9	4
C-10-SC-31	10"	Description as per C-10-SC-29; Group III	—	3 hr		1		9	3
C-10-SC-32	10"	Description as per C-10-SC-29; Group IV	—	2 hr		1		9	2
C-11-SC-33	11"	8" × 8" steel column with 3" outside protection; Group I	—	8 hr		1		9	8
C-11-SC-34	11"	Description as per C-11-SC-33; Group II	—	6 hr		1		9	6
C-11-SC-35	11"	Description as per C-11-SC-33; Group III	—	4 hr		1		9	4
C-11-SC-36	11"	Description as per C-11-SC-33; Group IV	—	3 hr		1		9	3

(Sheet 4 of 4)

Notes:
1. Tested under total restraint load to prevent expansion — minimum load 90 tons.
2. Failure mode — collapse.
3. Passed 2-hr fire test (Grade "C" — British).
4. Passed hose stream test.
5. Column tested and passed 3-hr grade fire resistance (British).
6. Column passed 3-hr fire test.
7. Column collapsed during hose stream test.
8. Column passed 6-hr fire test.
9. Group I — includes concrete having calcareous aggregate containing a combined total of not more than 10 percent of quartz, chert, and flint for the coarse aggregate.
Group II — includes concrete having trap-rock aggregate applied without metal ties and also concrete having cinder, sandstone, or granite aggregate, if held in place with wire mesh or expanded metal having not larger than 4-in. mesh, weighing not less than 1.7 lb/yd^2, placed not more than 1 in. from the surface of the concrete.
Group III — includes concrete having cinder, sandstone, or granite aggregate tied with No. 5 gauge steel wire, wound spirally over the column section on a pitch of 8 in., or equivalent ties, and concrete having siliceous aggregates containing a combined total of 60 percent or more of quartz, chert, and flint, if held in place with wire mesh or expanded metal having not larger than 4-in. mesh, weighing not less than 1.7 lb/yd^2 placed not more than 1 in. from the surface of the concrete.
Group IV — includes concrete having siliceous aggregates containing a combined total of 60 percent or more of quartz, chert, and flint, and tied with No. 5 gauge steel wire wound spirally over the column section on a pitch of 8 in., or equivalent ties.

--`,,```,,,,````-`-`,,`,,`,`,,`---
Copyright National Fire Protection Association
Provided by IHS under license with NFPA
No reproduction or networking permitted without license from IHS
Not for Resale

FIGURE O.4.5.37 Steel Columns — Concrete Encasements with Minimum Dimension 12 in. (300 mm) to Less Than 14 in. (350 mm).

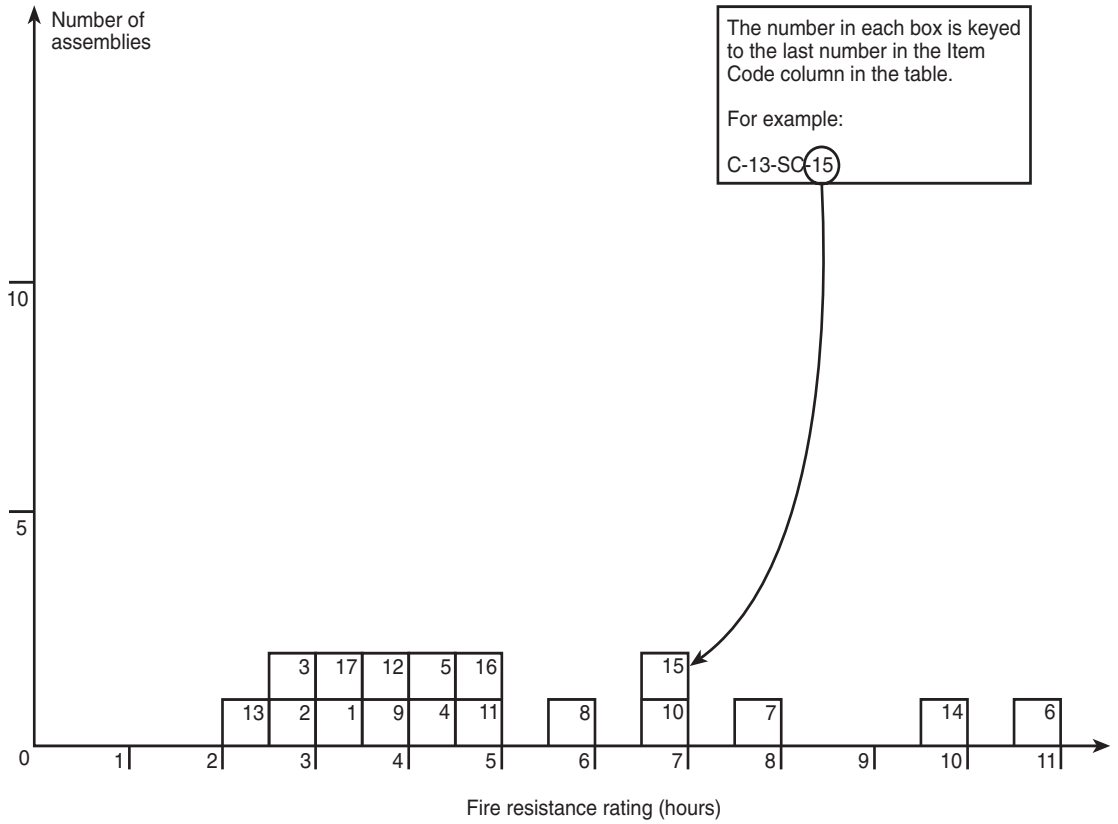

Table O.4.5.37 Steel Columns — Concrete Encasements Minimum Dimension 12" (300 mm) to Less Than 14" (350 mm)

Item Code	Minimum Dimension	Construction Details	Performance		Reference Number			Notes	Rec Hours
			Load	Time	Pre-BMS-92	BMS-92	Post-BMS-92		
C-12-SC-1	12"	12" × 14" concrete encased steel column; 8" × 6" × 35 lb H beam; protection: aggregate concrete (4150 psi) with 4" mesh; 16 SWG reinforcing 1" below column surface	120 tons	3 hr 24 min			7	1	$3^{1}/_{3}$
C-12-SC-2	12"	12" × 16" concrete encased column; 8" × 6" × 35 lb H beam; protection: aggregate concrete (4300 psi) with 4" mesh; 16 SWG reinforcing 1" below surface	90 tons	24 hr 52 min			7	1	$2^{3}/_{4}$
C-12-SC-3	12"	12" × 16" concrete encased steel column; 12" × 8" × 65 lb H column; protection: gravel aggregate concrete (3550 psi) with 4" mesh; 16 SWG reinforcement 1" below column surface	177 tons	2 hr 31 min			7	1	$2^{1}/_{2}$
C-12-SC-4	12"	12" × 16" concrete encased column; 12" × 8" × 65 lb H beam; protection: aggregate concrete (3450 psi) with 4" — 16 SWG mesh reinforcement 1" below column surface	118 tons	4 hr 4 min			7	1	$4^{1}/_{3}$

(Sheet 1 of 2)

Copyright National Fire Protection Association
Provided by IHS under license with NFPA
No reproduction or networking permitted without license from IHS
Not for Resale

Table O.4.5.37 Steel Columns — Concrete Encasements Minimum Dimension 12" (300 mm) to Less Than 14" (350 mm) ***(Continued)***

Item Code	Minimum Dimension	Construction Details	Performance		Reference Number			Notes	Rec Hours
			Load	Time	Pre-BMS-92	BMS-92	Post-BMS-92		
C-12-SC-5	$12^1/_2$"	$12^1/_2$" × 14" column; 6" × $4^1/_2$" × 20 lb H beam; protection: gravel aggregate concrete (3750 psi) with 4" × 4" mesh; 16 SWG reinforcing 1" below column surface	52 tons	4 hr 29 min			7	1	$4^1/_3$
C-12-SC-6	12"	8" × 8" steel column; 2" outside protection; Group I	—	11 hr			1	2	11
C-12-SC-7	12"	Description as per C-12-SC-6; Group II	—	8 hr		1		2	8
C-12-SC-8	12"	Description as per C-12-SC-6; Group III	—	6 hr		1		2	6
C-12-SC-9	12"	Description as per C-12-SC-6; Group IV	—	4 hr		1		2	4
C-12-SC-10	12"	10" × 10" steel column with 2" outside protection; Group I	—	7 hr		1		2	7
C-12-SC-11	12"	Description as per C-12-SC-10; Group II	—	5 hr		1		2	5
C-12-SC-12	12"	Description as per C-12-SC-10; Group III	—	4 hr		1		2	4
C-12-SC-13	12"	Description as per C-12-SC-10; Group IV	—	2 hr 30 min		1		2	$2^1/_2$
C-13-SC-14	13"	10" × 10" steel column with 3" outside protection; Group I	—	10 hr		1		2	10
C-13-SC-15	13"	Description as per C-13-SC-14; Group II	—	7 hr		1		2	7
C-13-SC-16	13"	Description as per C-13-SC-14; Group III	—	5 hr		1		2	5
C-13-SC-17	13"	Description as per C-13-SC-14; Group IV	—	3 hr 30 min		1		2	$3^1/_2$

(Sheet 2 of 2)

Notes:
1. Failure mode — collapse.
2. Group I — includes concrete having calcareous aggregate containing a combined total of not more than 10 percent of quartz, chert, and flint for the coarse aggregate.

Group II — includes concrete having trap-rack aggregate applied without metal ties and also concrete having cinder, sandstone, or granite aggregate, if held in place with wire mesh or expanded metal having not larger than 4-in. mesh, weighing not less than 1.7 lb/yd^2, placed not more than 1 in. from the surface of the concrete.

Group III — includes concrete having cinder, sandstone, or granite aggregate tied with No. 5 gauge steel wire, wound spirally over the column section on a pitch of 8 in., or equivalent ties, and concrete having siliceous aggregates containing a combined total of 60 percent or more of quartz, chert, and flint, if held in place with wire mesh or expanded metal having not larger than 4-in. mesh, weighing not less than 1.7 lb/yd^2 placed not more than 1 in. from the surface of the concrete.

Group IV — includes concrete having siliceous aggregates containing a combined total of 60 percent or more of quartz, chert, and flint, and tied with No. 5 gauge steel wire wound spirally over the column section on a pitch of 8 in., or equivalent ties.

Copyright National Fire Protection Association
Provided by IHS under license with NFPA
No reproduction or networking permitted without license from IHS
Not for Resale

FIGURE O.4.5.38 Steel Columns — Concrete Encasements with Minimum Dimension 14 in. (350 mm) to Less Than 16 in. (400 mm).

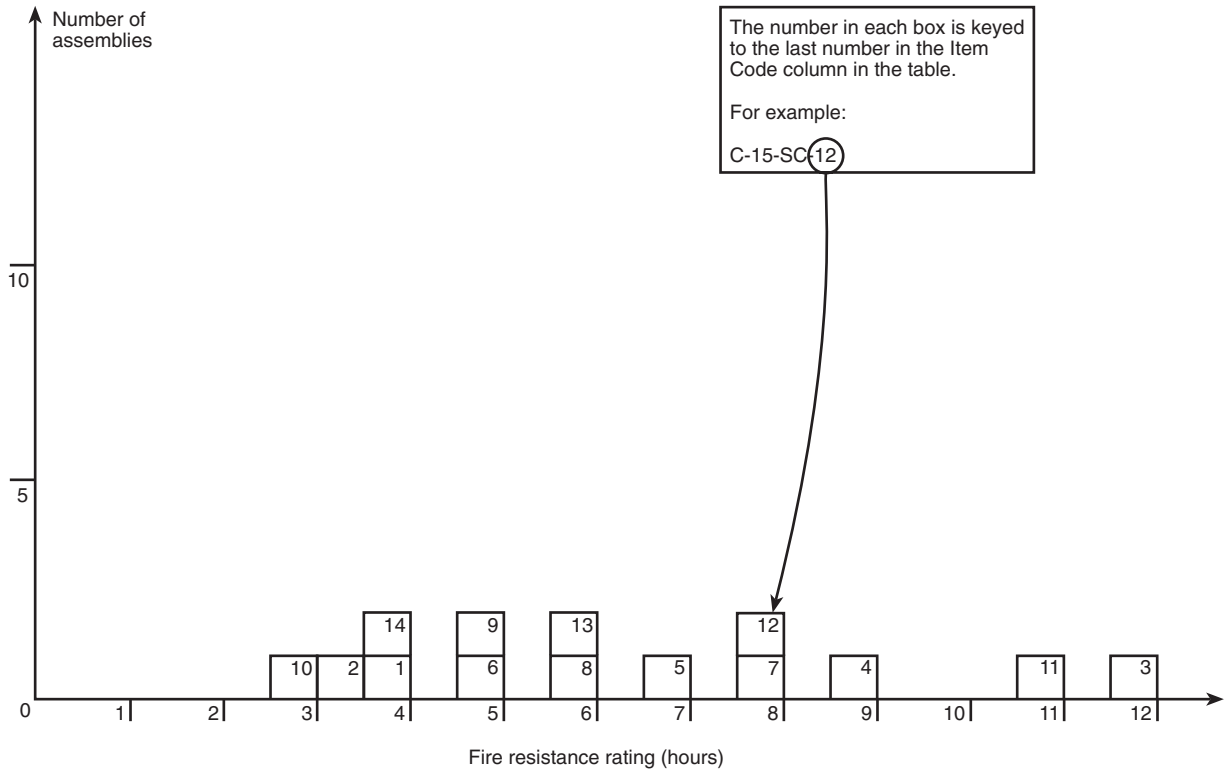

Table O.4.5.38 Steel Columns — Concrete Encasements Minimum Dimension 14" (250 mm) to Less Than 16" (400 mm)

Item Code	Minimum Dimension	Construction Details	Performance		Reference Number			Notes	Rec Hours
			Load	Time	Pre-BMS-92	BMS-92	Post-BMS-92		
C-14-SC-1	14"	14" × 16" concrete encased steel column; 8" × 6" × 35 lb H column; protection: aggregate concrete (4240 psi) with 4" mesh 16 SWG reinforcing 1" below column surface	90 tons	3 hr 40 min			7	1	3
C-14-SC-2	14"	14" × 18" concrete encased steel column; 12" × 8" × 65 lb H beam; protection: gravel aggregate concrete (4000 psi) with 4" 16 SWG wire mesh reinforcement 1" below column surface	177 tons	3 hr 20 min			7	1	3
C-14-SC-3	14"	10" × 10" steel column with 4" outside protection; Group I	—	12 hr		1		2	12
C-14-SC-4	14"	Description as per C-14-SC-3; Group II	—	9 hr		1		2	9
C-14-SC-5	14"	Description as per C-14-SC-3; Group III	—	7 hr		1		2	7
C-14-SC-6	14"	Description as per C-14-SC-3; Group IV	—	5 hr		1		2	5
C-14-SC-7	14"	12" × 12" steel column with 2" outside protection; Group I	—	8 hr		1		2	8

(Sheet 1 of 2)

Copyright National Fire Protection Association
Provided by IHS under license with NFPA
No reproduction or networking permitted without license from IHS
Not for Resale

Table O.4.5.38 Steel Columns — Concrete Encasements Minimum Dimension 14" (250 mm) to Less Than 16" (400 mm) *(Continued)*

Item Code	Minimum Dimension	Construction Details	Performance		Reference Number			Notes	Rec Hours
			Load	Time	Pre-BMS-92	BMS-92	Post-BMS-92		
C-14-SC-8	14"	Description as per C-14-SC-7; Group II	—	6 hr		1		2	6
C-14-SC-9	14"	Description as per C-14-SC-7; Group III	—	5 hr		1		2	5
C-14-SC-10	14"	Description as per C-14-SC-7; Group IV	—	3 hr		1		2	3
C-15-SC-11	15"	12" × 12" steel column with 3" outside protection; Group I	—	11 hr		1		2	11
C-15-SC-12	15"	Description as per C-15-SC-11; Group II	—	8 hr		1		2	8
C-15-SC-13	15"	Description as per C-15-SC-11; Group III	—	6 hr		1		2	6
C-15-SC-14	15"	Description as per C-15-SC-11; Group IV	—	4 hr		1		2	4

(Sheet 2 of 2)

Notes:
1. Collapse.
2. Group I — includes concrete having calcareous aggregate containing a combined total of not more than 10 percent of quartz, chert, and flint for the coarse aggregate.

Group II — includes concrete having trap-rock aggregate applied without metal ties and also concrete having cinder, sandstone, or granite aggregate, if held in place with wire mesh or expanded metal having not larger than 4-in. mesh, weighing not less than 1.7 lb/yd^2, placed not more than 1 in. from the surface of the concrete.

Group III — includes concrete having cinder, sandstone, or granite aggregate tied with No. 5 gauge steel wire, wound spirally over the column section on a pitch of 8 in., or equivalent ties, and concrete having siliceous aggregates containing a combined total of 60 percent or more of quartz, chert, and flint, if held in place with wire mesh or expanded metal having not larger than 4-in. mesh, weighing not less than 1.7 lb/yd^2 placed not more than 1 in. from the surface of the concrete.

Group IV — includes concrete having siliceous aggregates containing a combined total of 60 percent or more of quartz, chert, and flint, and tied with No. 5 gauge steel wire wound spirally over the column section on a pitch of 8 in. or equivalent ties.

Table O.4.5.39 Steel Columns — Concrete Encasements Minimum Dimension 16" (400 mm) to Less Than 18" (450 mm)

Item Code	Minimum Dimension	Construction Details	Performance		Reference Number			Notes	Rec Hours
			Load	Time	Pre-BMS-92	BMS-92	Post-BMS-92		
C-16-SC-1	16"	12" × 12" steel column with 4" outside protection: Group I	—	14 hr		1		1	14
C-16-SC-2	16"	Description as per C-16-SC-1; Group II	—	10 hr		1		1	10
C-16-SC-3	16"	Description as per C-16-SC-1; Group III	—	8 hr		1		1	8
C-16-SC-4	16"	Description as per C-16-SC-1; Group IV	—	5 hr		1		1	5

Notes:
1. Collapse.

Group I — includes concrete having calcareous aggregate containing a combined total of not more than 10 percent of quartz, chert, and flint for the coarse aggregate.

Group II — includes concrete having trap-rock aggregate applied without metal ties and also concrete having cinder, sandstone, or granite aggregate, if held in place with wire mesh or expanded metal having not larger than 4-in. mesh, weighing not less than 1.7 lb/yd^2, placed not more than 1 in. from the surface of the concrete.

Group III — includes concrete having cinder, sandstone, or granite aggregate tied with No. 5 gauge steel wire, wound spirally over the column section on a pitch of 8 in., or equivalent ties, and concrete having siliceous aggregates containing a combined total of 60 percent or more of quartz, chert, and flint, if held in place with wire mesh or expanded metal having not larger than 4-in. mesh, weighing not less than 1.7 lb/yd^2 placed not more than 1 in. from the surface of the concrete.

Group IV — includes concrete having siliceous aggregates containing a combined total of 60 percent or more of quartz, chert, and flint, and tied with No. 5 gauge steel wire wound spirally over the column section on a pitch of 8 in. or equivalent ties.

Copyright National Fire Protection Association
Provided by IHS under license with NFPA
No reproduction or networking permitted without license from IHS
Not for Resale

Table O.4.5.40 Steel Columns — Brick and Block Encasements Minimum Dimension 10" (250 mm) to Less Than 12" (300 mm)

Item Code	Minimum Dimension	Construction Details	Performance		Reference Number			Notes	Rec Hours
			Load	Time	Pre-BMS-92	BMS-92	Post-BMS-92		
C-10-SB-1	$10^1/_2$"	$10^1/_2$" × 13" brick-encased steel columns; 8" × 6" × 35 lb H beam; protection: fill of broken brick and mortar; 2" brick on edge, joints broken in alt. courses; cement-sand grout; 13 SWG wire reinforcement in every third horizontal joint	90 tons	3 hr 6 min			7	1	3
C-10-SB-2	$10^1/_2$"	$10^1/_2$" × 13" brick-encased steel columns; 8" × 6" × 35 lb H beam; protection: 2" brick, joints broken in alt. courses; cement-sand grout; 13 SWG iron wire reinforcement in alternate horizontal joints	90 tons	2 hr			7	2–4	2
C-10-SB-3	10"	10" × 12" block-encased columns; 8" × 6" × 35 lb H beam; protection: 2" foamed slag concrete blocks; 13 SWG wire at each horizontal joint; mortar at each joint	90 tons	2 hr			7	5	2
C-10-SB-4	$10^1/_2$"	$10^1/_2$" × 12" block-encased steel columns; 8" × 6" × 35 lb H beam; protection: gravel aggregate concrete fill (unconsolidated) 2" thick hollow clay tiles with mortar at edges	86 tons	56 min			7	1	$^3/_4$
C-10-SB-5	$10^1/_2$"	$10^1/_2$" × 12" block-encased steel columns; 8" × 6" × 35 lb H beam; protection: 2" hollow clay tiles with mortar at edges	86 tons	22 min			7	1	$^1/_4$

Notes:
1. Failure mode — collapse.
2. Passed 2-hr fire test (Grade "C" British).
3. Passed hose stream test.
4. Passed reload test.
5. Passed 2-hr fire exposure but collapsed immediately following hose stream test.

Table O.4.5.41 Steel Columns — Brick and Block Encasements Minimum Dimension 12" (300 mm) to Less Than 14" (350 mm)

Item Code	Minimum Dimension	Construction Details	Performance		Reference Number			Notes	Rec Hours
			Load	Time	Pre-BMS-92	BMS-92	Post-BMS-92		
C-12-B-1	12"	12" × 15" brick-encased steel columns; 8" × 6" × 35 lb H beam; protection: $2^5/_8$" thick brick; joints broken in alt. courses; cement-sand grout; fill of broken brick and mortar	90 tons	1 hr 49 min			7	1	$1^3/_4$

Notes:
1. Failure mode — collapse.

Copyright National Fire Protection Association
Provided by IHS under license with NFPA
No reproduction or networking permitted without license from IHS
Not for Resale

Table O.4.5.42 Steel Columns — Brick and Block Encasements Minimum Dimension 14" (350 mm) to Less Than 16" (400 mm)

Item Code	Minimum Dimension	Construction Details	Performance		Reference Number			Notes	Rec Hours
			Load	Time	Pre-BMS-92	BMS-92	Post-BMS-92		
C-15-SB-1	15"	15" × 17" brick-encased steel columns; 8" × 6" × 35 lb H beam; protection: $4^1/_2$" thick brick; joints broken in alt. courses; cement-sand grout; fill of broken brick and mortar	45 tons	6 hr			7	1	6
C-15-SB-2	15"	15" × 17" brick-encased steel columns; 8" × 6" × 35 lb H beam; protection: fill of broken brick and mortar; $4^1/_2$" brick, joints broken in alt. courses; cement-sand grout	86 tons	6 hr			7	2-4	6
C-15-SB-3	15"	15" × 18" brick-encased steel columns; 8" × 6" × 35 lb H beam; protection: $4^1/_2$" brick work; joints alternating; cement-sand grout	90 tons	4 hr			7	5,6	4
C-14-SB-4	14"	14" × 16" block-encased steel columns; 8" × 6" × 35 lb H beam; protection: 4" thick foam slag concrete blocks; 13 SWG wire reinforcement in each horizontal joint; mortar in joints	90 tons	5 hr 52 min			7	7	$4^3/_4$

Notes:
1. Only a nominal load was applied to specimen.
2. Passed 6-hr fire test (Grade "A" — British).
3. Passed (6 min) hose stream test.
4. Reload not specified.
5. Passed 4-hr fire exposure.
6. Failed by collapse between 1st and 2nd minute of hose stream exposure.
7. Mode of failure — collapse.

Table O.4.5.43 Steel Columns — Plaster Encasements Minimum Dimension 6" (150 mm) to Less Than 8" (200 mm)

Item Code	Minimum Dimension	Construction Details	Performance		Reference Number			Notes	Rec Hours
			Load	Time	Pre-BMS-92	BMS-92	Post-BMS-92		
C-7-SP-1	$7^1/_2$"	$7^1/_2$" × $9^1/_2$" plaster protected steel columns; 8" × 6" × 35 lb H beam; protection: 24 SWG wire metal lath; $1^1/_4$" lime plaster	90 tons	57 min			7	1	$^3/_4$
C-7-SP-2	$7^7/_8$"	$7^7/_8$" × 10" plaster protected steel columns; 8" × 6" × 35 lb H beam; protection: $^3/_8$" gypsum bal. wire wound with 16 SWG wire helically wound @ 4" pitch; $^1/_2$" gypsum plaster	90 tons	1 hr 13 min			7	1	1
C-7-SP-3	$7^1/_4$"	$7^1/_4$" × $9^3/_8$" plaster protected steel columns; 8" × 6" × 35 lb H beam; protection: $^3/_8$" gypsum board; wire helically wound 16 SWG @ 4" pitch; $^1/_4$" gypsum plaster finish	90 tons	1 hr 14 min			7	1	1

Notes:
1. Failure mode — collapse.

Copyright National Fire Protection Association
Provided by IHS under license with NFPA
No reproduction or networking permitted without license from IHS
Not for Resale

Table O.4.5.44 Steel Columns — Plaster Encasements Minimum Dimension 8" (200 mm) to Less Than 10" (250 mm)

Item Code	Minimum Dimension	Construction Details	Performance		Reference Number			Notes	Rec Hours
			Load	Time	Pre-BMS-92	BMS-92	Post-BMS-92		
C-8-SP-1	8"	8" × 10" plaster protected steel columns; 8" × 6" × 35 lb H beam; protection: 24 SWG wire lath with 1" gypsum plaster	86 tons	1 hr 23 min			7	1	$1\frac{1}{4}$
C-8-SP-2	$8\frac{1}{2}$"	$8\frac{1}{2}$" × $10\frac{1}{2}$" plaster protected steel columns; 8" × 6" × 35 lb H beam; protection 24 SWG metal lath wrap; $1\frac{1}{4}$" gypsum plaster	90 tons	1 hr 36 min			7	1	$1\frac{1}{2}$
C-9-SP-3	9"	9" × 11" plaster protected steel columns; 8" × 6" × 35 lb H beam; protection: 24 SWG metal lath wrap; $\frac{1}{8}$" M. S. ties at 12" pitch wire netting $1\frac{1}{2}$" × 22 SWG between 1st and 2nd plaster coats; $1\frac{1}{2}$" gypsum plaster	90 tons	1 hr 33 min			7	1	$1\frac{1}{2}$
C-8-SP-4	$8\frac{3}{4}$"	$8\frac{3}{4}$" × $10\frac{3}{4}$" plaster protected steel columns 8" × 6" × 35 lb H beam; protection: $\frac{3}{4}$" gypsum board — wire wound spirally (16 SWG) @ $1\frac{1}{2}$" pitch; $\frac{1}{2}$" gypsum plaster	90 tons	2 hr			7	2-4	2

Notes:
1. Failure mode — collapse.
2. Passed 2-hr fire exposure test (Grade "C" — British).
3. Passed hose stream test.
4. Passed reload test.

Table O.4.5.45 Steel Columns — Miscellaneous Encasements Minimum Dimension 6" (150 mm) to Less Than 8" (200 mm)

Item Code	Minimum Dimension	Construction Details	Performance		Reference Number			Notes	Rec Hours
			Load	Time	Pre-BMS-92	BMS-92	Post-BMS-92		
C-7-SM-1	$7\frac{5}{8}$"	$7\frac{5}{8}$" × $9\frac{1}{2}$" (asbestos plaster) protected steel columns; 8" × 6" × 35 lb H beam; protection: 20 ga. $\frac{1}{2}$" metal lath; $\frac{9}{16}$" asbestos plaster (min.)	90 tons	1 hr 52 min			7	1	$1\frac{3}{4}$

Notes:
1. Failure mode — collapse.

Table O.4.5.46 Steel Columns — Miscellaneous Encasements Minimum Dimension 8" (200 mm) to Less Than 10" (250 mm)

Item Code	Minimum Dimension	Construction Details	Performance		Reference Number			Notes	Rec Hours
			Load	Time	Pre-BMS-92	BMS-92	Post-BMS-92		
C-9-SM-1	$9\frac{5}{8}$"	$9\frac{5}{8}$" × $11\frac{3}{8}$" asbestos slab and cement plaster protected columns; 8" × 6" × 35 lb H beam; protection: 1" asbestos slabs, wire wound, $\frac{5}{8}$" plaster	90 tons	2 hr			7	1,2	2

Notes:
1. Passed 2-hr fire exposure test.
2. Collapsed during hose stream test.

Copyright National Fire Protection Association
Provided by IHS under license with NFPA
No reproduction or networking permitted without license from IHS
Not for Resale

Table O.4.5.47 Steel Columns — Miscellaneous Encasements Minimum Dimension 10" (250 mm) to Less Than 12" (300 mm)

Item Code	Minimum Dimension	Construction Details	Performance		Reference Number			Notes	Rec Hours
			Load	Time	Pre-BMS-92	BMS-92	Post-BMS-92		
C-11-SM-1	$11^1/_2$"	$11^1/_2$" × $13^1/_2$" wood wool and plaster protected steel columns; 8" × 6" × 35 lb H beam; protection: wood-wool-cement paste as fill and to 2" cover over beam; $^3/_4$" gypsum plaster finish	90 tons	2 hr			7	1-3	2
C-10-SM-2	10"	10" × 12" asbestos protected steel columns; 8" × 6" × 35 lb H beam; protection: sprayed on asbestos paste to 2" cover over column	90 tons	4 hr			7	2-4	4

Notes:
1. Passed 2-hr fire exposure test (Grade "C" — British).
2. Passed hose stream test.
3. Passed reload test.
4. Passed 4-hr fire exposure test.

Table O.4.5.48 Steel Columns — Miscellaneous Encasements Minimum Dimension 12" (300 mm) to Less Than 14" (350 mm)

Item Code	Minimum Dimension	Construction Details	Performance		Reference Number			Notes	Rec Hours
			Load	Time	Pre-BMS-92	BMS-92	Post-BMS-92		
C-12-SM-1	12"	12" × $14^1/_4$" cement and asbestos protected column; 8" × 6" × 35 lb H beam; protection: fill of asbestos packing pieces 1" thick 1' 3" O.C.; cover of 2" molded asbestos inner layer; 1" molded asbestos, outer layer; held in position by 16 SWG nichrome wire ties; wash of refractory cement on outer surface	86 tons	4 hr 43 min			7	1-3	$4^2/_3$

Notes:
1. Passed 4-hr fire exposure (Grade "B" — British).
2. Passed hose stream test.
3. Passed reload test.

Copyright National Fire Protection Association
Provided by IHS under license with NFPA
No reproduction or networking permitted without license from IHS
Not for Resale

FIGURE O.4.5.49 Floor/Ceiling Assemblies — Reinforced Concrete.

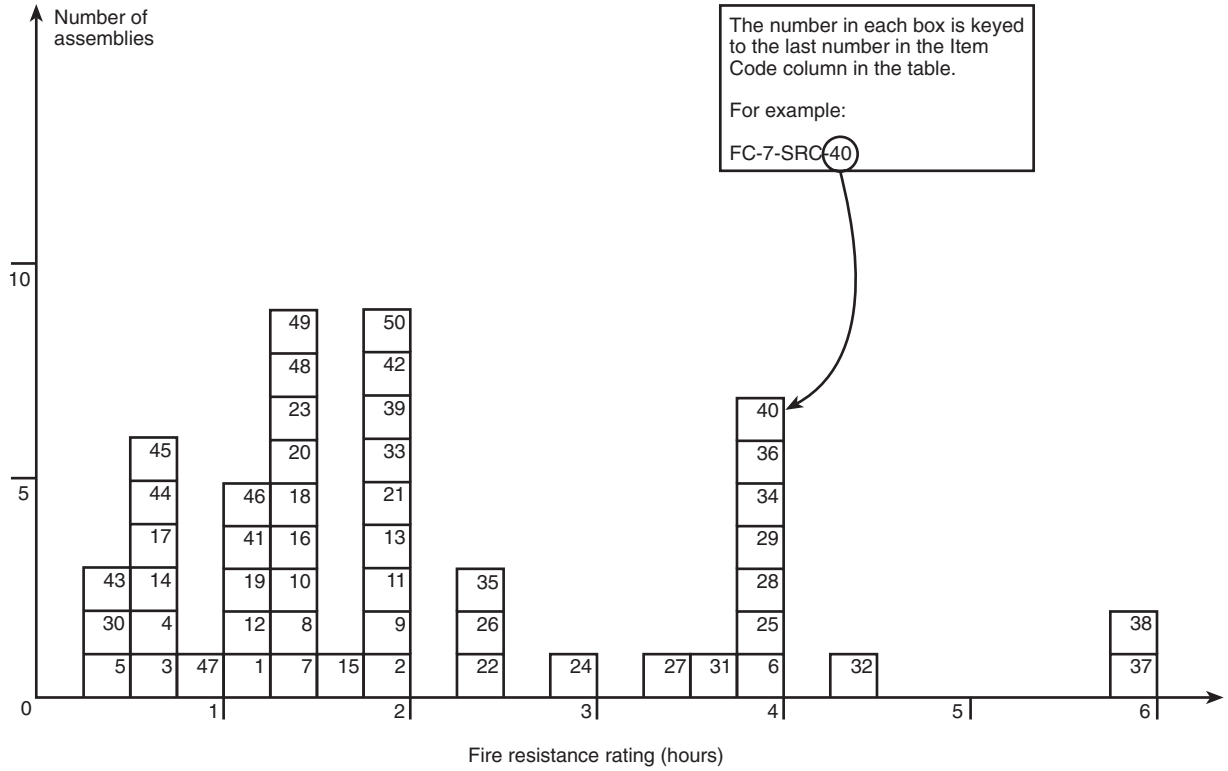

Table O.4.5.49 Floor/Ceiling Assemblies — Reinforced Concrete

Item Code	Assembly Thickness	Construction Details	Performance		Reference Number			Notes	Rec Hours
			Load	Time	Pre-BMS-92	BMS-92	Post-BMS-92		
FC-3-RC-1	$3^3/_4$"	$3^3/_4$" thick floor; $3^1/_4$" (5475 psi) concrete deck; $^1/_2$" plaster under deck; $^3/_8$" main rein. bars @ $5^1/_2$" pitch with $^7/_8$" concrete cover; $^3/_8$" main rein. bars @ $4^1/_2$" pitch perpendicular with $^1/_2$" concrete cover; 13' 1" span restrained	195 psf	24 min			7	1,2	1
FC-3-RC-2	$3^1/_4$"	$3^1/_4$" deep (3540 psi) concrete deck; $^3/_8$" main rein. bars @ $5^1/_2$" pitch with $^7/_8$" cover; $^3/_8$" main rein. bars @ $4^1/_2$" pitch perpendicular with $^1/_2$" cover; 13' 1" span restrained	195 psf	2 hr			7	1,3,4	$1^3/_4$
FC-3-RC-3	$3^1/_4$"	$3^1/_4$" deep (4175 psi) concrete deck; $^3/_8$" main rein. bars @ $5^1/_2$" pitch with $^7/_8$" cover; $^3/_8$" main rein. bars @ $4^1/_2$" pitch perpendicular with $^1/_2$" cover; 13' 1" span restrained	195 psf	31 min			7	1,5	$^1/_2$
FC-3-RC-4	$3^1/_4$"	$3^1/_4$" deep (4355 psi) concrete deck; $^3/_8$" main rein. bars @ $5^1/_2$" pitch with $^7/_8$" cover; $^3/_8$" main rein. bars @ $4^1/_2$" pitch perpendicular with $^1/_2$" cover; 13' 1" span restrained	195 psf	41 min			7	1,5,6	$^1/_2$
FC-3-RC-5	$3^1/_4$"	$3^1/_4$" thick (3800 psi) concrete deck; $^3/_8$" main rein. bars @ $5^1/_2$" pitch with $^7/_8$" cover; $^3/_8$" main rein. bars @ $4^1/_2$" pitch perpendicular with $^1/_2$" cover; 13' 1" span restrained	195 psf	1 hr 5 min			7	1,5	$^1/_4$

(Sheet 1 of 5)

Copyright National Fire Protection Association
Provided by IHS under license with NFPA
No reproduction or networking permitted without license from IHS
Not for Resale

Table O.4.5.49 Floor/Ceiling Assemblies — Reinforced Concrete *(Continued)*

Item Code	Assembly Thickness	Construction Details	Performance		Reference Number			Notes	Rec Hours
			Load	Time	Pre-BMS-92	BMS-92	Post-BMS-92		
FC-4-RC-6	$4^1/_4$"	$4^1/_4$" thick; $3^1/_4$" concrete deck (4000 psi); 1" sprayed asbestos lower surface; $^3/_8$" main rein. bars @ $5^7/_8$" pitch with $^7/_8$" concrete cover; $^3/_8$" main rein. bars @ $4^1/_2$" pitch perpendicular with $^1/_2$" concrete cover; 13' 1" span restrained	195 psf	4 hr			7	1,7	4
FC-4-RC-7	4"	4" deck (5025 psi); $^1/_4$" rein. bars @ $7^1/_2$" pitch with $^3/_4$" cover; $^3/_8$" main rein. bars @ $3^3/_4$" pitch perpendicular with $^1/_2$" cover; 13' 1" span restrained	140 psf	1 hr 16 min			7	1,2	$1^1/_4$
FC-4-RC-8	4"	4" thick (4905 psi) deck; $^1/_4$" rein. bars @ $7^1/_2$" pitch with $^7/_8$" cover; $^3/_8$" main rein. bars @ $3^3/_4$" pitch perpendicular with $^1/_2$" cover; 13' 1" span restrained	100 psf	1 hr 23 min			7	1,2	$1^1/_3$
FC-4-RC-9	4"	4" deep (4370 psi); $^1/_4$" rein. bars @ 6" pitch with $^3/_4$" cover; $^1/_4$" main rein. bars @ 4" pitch perpendicular with $^1/_2$" cover; 13' 1" span restrained	150 psf	2 hr			7	1,3	2
FC-4-RC-10	4"	4" thick (5140 psi) deck; $^1/_4$" rein. bars @ $7^1/_2$" pitch with $^7/_8$" cover; $^3/_8$" main rein. bars @ $3^3/_4$" pitch perpendicular with $^1/_2$" cover; 13' 1" span restrained	140 psf	1 hr 16 min			7	1,5	$1^1/_4$
FC-4-RC-11	4"	4" thick (4000 psi) concrete deck; 3" × $1^1/_2$" × 4 lb R.S.J.; 2' 6" C.R.S.; flush with top surface; 4" × 6" × 13 SWG mesh rein. 1" from bottom of slab; 6' 6" span restrained	150 psf	2 hr			7	1,3	2
FC-4-RC-12	4"	4" deep (2380 psi) concrete deck; 3" × $1^1/_2$" × 4 lb R.S.J.; 2' 6" C.R.S.; flush with top surface; 4" × 6" × 13 SWG mesh rein. 1" from bottom surface; 6' 6" span restrained	150 psf	1 hr 3 min			7	1,2	1
FC-4-RC-13	$4^1/_2$"	$4^1/_2$" thick (5200 psi) deck; $^1/_4$" rein. bars @ $7^1/_4$" pitch with $^7/_8$" cover; $^3/_8$" main rein. bars @ $3^3/_4$" pitch perpendicular with $^1/_2$" cover; 13' 1" span restrained	140 psf	2 hr			7	1,3	2
FC-4-RC-14	$4^1/_2$"	$4^1/_2$" deep (2525 psi) concrete deck; $^1/_4$" rein. bars @ $7^1/_2$" pitch with $^7/_8$" cover; $^3/_8$" main rein. bars @ $3^3/_8$" pitch perpendicular with $^1/_2$" cover; 13' 1" span restrained	150 psf	42 min			7	1,5	$^2/_3$
FC-4-RC-15	$4^1/_2$"	$4^1/_2$" deep (4830 psi) concrete deck; $1^1/_2$" × No. 15 gauge wire mesh; $^3/_8$" rein. bar @ 15" pitch with 1" cover; $^1/_2$" main rein. bars @ 6" pitch perpendicular with $^1/_2$" cover; 12' span simply supported	75 psf	1 hr 32 min			7	1,8	$1^1/_2$
FC-4-RC-16	$4^1/_2$"	$4^1/_2$" deep (4595 psi) concrete deck; $^1/_4$" rein. bars @ $7^1/_2$" pitch with $^7/_8$" cover; $^3/_8$" main rein. bars @ $3^1/_2$" pitch perpendicular with $^1/_2$" cover; 12' span simply supported	75 psf	1 hr 20 min			7	1,8	$1^1/_3$
FC-4-RC-17	$4^1/_2$"	$4^1/_2$" deep (3625 psi) concrete deck; $^1/_4$" rein. bars @ $7^1/_2$" pitch with $^7/_8$" cover; $^3/_8$" main rein. bars @ $3^1/_2$" pitch perpendicular with $^1/_2$" cover; 12' span simply supported	75 psf	35 min			7	1,8	$^1/_2$

(Sheet 2 of 5)

Copyright National Fire Protection Association
Provided by IHS under license with NFPA
No reproduction or networking permitted without license from IHS
Not for Resale

Table O.4.5.49 Floor/Ceiling Assemblies — Reinforced Concrete *(Continued)*

Item Code	Assembly Thickness	Construction Details	Performance		Reference Number			Notes	Rec Hours
			Load	Time	Pre-BMS-92	BMS-92	Post-BMS-92		
FC-4-RC-18	$4^1/_2$"	$4^1/_2$" deep (4410 psi) concrete deck; $^1/_4$" rein. bars @ $7^1/_2$" pitch with $^7/_8$" cover; $^3/_8$" main rein. bars @ $3^1/_2$" pitch perpendicular with $^1/_2$" cover; 12' span simply supported	85 psf	1 hr 27 min			7	1,8	$1^1/_3$
FC-4-RC-19	$4^1/_2$"	$4^1/_2$" deep (4850 psi) deck; $^3/_8$" rein. bars @ 15" pitch with 1" cover; $^1/_2$" main rein. bars @ 6" pitch perpendicular with $^1/_2$" cover; 12' span simply supported	75 psf	2 hr 15 min			7	1,9	$1^1/_4$
FC-4-RC-20	$4^1/_2$"	$4^1/_2$" deep (3610 psi) deck; $^1/_4$" rein. bars @ $7^1/_2$" pitch with $^7/_8$" cover; $^3/_8$" main rein. bars @ $3^1/_2$" pitch perpendicular with $^1/_2$" cover; 12' span simply supported	75 psf	1 hr 22 min			7	1,8	$1^1/_3$
FC-5-RC-21	5"	5" deep $4^1/_2$" (5830 psi) concrete deck; $^1/_2$" plaster finish bottom of slab; $^1/_4$" rein. bars $7^1/_2$" pitch with $^7/_8$" cover; $^3/_8$" main rein. bars @ $3^1/_2$" pitch perpendicular with $^1/_2$" cover; 12' span simply supported	69 psf	2 hr			7	1,3	2
FC-5-RC-22	5"	$4^1/_2$" (5290 psi) concrete deck; $^1/_2$" plaster finish bottom of slab; $^1/_4$" rein. bars @ $7^1/_2$" pitch with $^7/_8$" cover; $^3/_8$" main rein. bars @ $3^1/_2$" pitch perpendicular with $^1/_2$" cover; 12' span simply supported	No Load	2 hr 28 min			7	1,10,11	$2^1/_4$
FC-5-RC-23	5"	5" deep (3020 psi) concrete deck; 3" × $1^1/_2$" × 4 lb R.S.J.; 2' C.R.S. with 1" cover on bottom and top flanges; 8' span restrained	172 psf	1 hr 24 min			7	1,2,12	$1^1/_2$
FC-5-RC-24	$5^1/_2$"	5" (5180 psi) concrete deck; $^1/_2$" retarded plaster underneath slab; $^1/_4$" rein. bars @ $7^1/_2$" pitch with $1^3/_8$" cover; $^3/_8$" main rein. bars @ $3^1/_2$" pitch perpendicular with 1" cover; 12' span simply supported	60 psf	2 hr 48 min			7	1,10	$2^3/_4$
FC-6-RC-25	6"	6" deep (4800 psi) concrete deck; $^1/_4$" rein. bars @ $7^1/_2$" pitch $^7/_8$" cover; $^3/_8$" main rein. bars @ $3^1/_2$" pitch perpendicular with $^7/_8$" cover; 13' 1" span restrained.	195 psf	4 hr			7	1,7	4
FC-6-RC-26	6"	6" (4650 psi) concrete deck; $^1/_4$" rein. bars @ $7^1/_2$" pitch with $^7/_8$" cover; $^3/_8$" main rein. bars @ $3^1/_2$" pitch perpendicular with $^1/_2$" cover; 13' 1" span restrained	195 psf	2 hr 23 min			7	1,2	$2^1/_4$
FC-6-RC-27	6"	6" deep (6050 psi) concrete deck; $^1/_4$" rein. bars @ $7^1/_2$" pitch with $^7/_8$" cover; $^3/_8$" main rein. bars @ $3^1/_2$" pitch perpendicular with $^1/_2$" cover; 13' 1" span restrained	195 psf	3 hr 30 min			7	1,10	$3^1/_2$
FC-6-RC-28	6"	6" deep (5180 psi) concrete deck; $^1/_4$" bars @ 8" pitch $^3/_4$" cover; $^1/_4$" bars @ $5^1/_2$" pitch with $^1/_2$" cover perpendicular; 13' 1" span restrained	150 psf	4 hr			7	1,7	4
FC-6-RC-29	6"	6" thick (4180 psi) concrete deck; 4" × 3" × 10 lb R.S.J.; 2' 6" C.R.S. with 1" cover on both bottom and top flanges; 13' 1" span restrained	160 psf	3 hr 48 min			7	1,10	$3^3/_4$

(Sheet 3 of 5)

Copyright National Fire Protection Association
Provided by IHS under license with NFPA
No reproduction or networking permitted without license from IHS
Not for Resale

Table O.4.5.49 Floor/Ceiling Assemblies — Reinforced Concrete *(Continued)*

Item Code	Assembly Thickness	Construction Details	Performance		Reference Number			Notes	Rec Hours
			Load	Time	Pre-BMS-92	BMS-92	Post-BMS-92		
FC-6-RC-30	6"	6" thick (3720 psi) concrete deck; 4" × 3" × 10 lb R.S.J.; 2' 6" C.R.S. with 1" cover on both top and bottom flanges; 12" span simply restrained	115 psf	29 min			7	1,5,13	1/4
FC-6-RC-31	6"	6" deep (3450 psi) concrete deck; 4" × 1 3/4" × 5 lb R.S.J.; 2' 6" C.R.S. with 1" cover on both top and bottom flanges; 12" span simply supported	25 psf	3 hr 35 min			7	1,2	3 1/2
FC-6-RC-32	6"	6" deep (4460 psi) concrete deck; 4" × 1 3/4" × 5 lb R.S.J.; 2' C.R.S.; 1" cover on both top and bottom flanges; 12' span simply supported	60 psf	4 hr 30 min			7	1,10	4 1/2
FC-6-RC-33	6"	6" deep (4360 psi) concrete deck; 4" × 1 3/4" × 5 lb R.S.J.; 2' C.R.S.; with 1" cover on both bottom and top flanges; 13' 1" span restrained	60 psf	2 hr			7	1,3	2
FC-6-RC-34	6 1/4"	6 1/4" thick; 4 3/4" (5120 psi) concrete core; 1" T&G board flooring; 1/2" plaster undercoat; 4" × 3" × 10 lb R.S.J.; 3' C.R.S. flush with top surface concrete 12' span simply supported; 2" × 1' 3" clinker concrete insert	100 psf	4 hr			7	1,7	4
FC-6-RC-35	6 1/4"	4 3/4" (3600 psi) concrete core; 1" T&G board flooring; 1/2" plaster undercoat; 4" × 3" × 10 lb R.S.J.; 3' C.R.S.; flush with top surface concrete; 12' span simply supported; 2" × 1' 3" clinker concrete insert	100 psf	2 hr 30 min			7	1,5	2 1/2
FC-6-RC-36	6 1/4"	4 3/4" (2800 psi) concrete core; 1" T&G board flooring; 1/2" plaster undercoat; 4" × 3" × 10 lb R.S.J.; 3' C.R.S.; flush with top surface concrete; 12' span simply supported; 2" × 1' 3" clinker concrete insert	80 psf	4 hr			7	1,7	4
FC-7-RC-37	7"	(3640 psi) concrete deck; 1/4" rein. bars @ 6" pitch 1 1/2" cover; 1/4" rein. bars @ 5" pitch 1 1/2" cover perpendicular; 13' 1" span restrained	169 psf	6 hr			7	1,14	6
FC-7-RC-38	7"	(4060 psi) concrete deck; 4" × 3" × 10 lb R.S.J.; 2' 6" C.R.S. with 1 1/2" cover on both top and bottom flanges; 4" × 6" × 13 SWG mesh rein. 1 1/2" from bottom of slab; 13' 1" span restrained	175 psf	6 hr			7	1,14	6
FC-7-RC-39	7 1/4"	5 3/4" (4010 psi) concrete core; 1" T&G board flooring; 1/2" plaster undercoat; 4" × 3" × 10 lb R.S.J., 2' 6" C.R.S.; 1" down from top surface of concrete; 12' simply supported span; 2" × 1' 3" clinker concrete insert	95 psf	2 hr			7	1,3	2
FC-7-RC-40	7 1/4"	5 3/4" (3220 psi) concrete core; 1" T&G board flooring; 1/2" plaster undercoat; 4" × 3" × 10 lb R.S.J., 2' 6" C.R.S.; 1" down from top surface of concrete; 12' simply supported span; 2" × 1' 3" clinker concrete insert	95 psf	4 hr			7	1,7	4
FC-7-RC-41	10" (2 1/4" slab)	Ribbed floor; see detail, note 15; slab 2 1/2" deep (3020 psi); 1/4" rein. bars @ 6" pitch with 3/4" cover; beams 7 1/2" deep × 5" wide; 24" C.R.S.; 5/8" rein. bars 2 rows 1/2" vertically apart with 1" cover; 13' 1" span restrained	195 psf	1 hr 4 min			7	1,2,15	1

(Sheet 4 of 5)

Copyright National Fire Protection Association
Provided by IHS under license with NFPA
No reproduction or networking permitted without license from IHS
Not for Resale

Table O.4.5.49 Floor/Ceiling Assemblies — Reinforced Concrete *(Continued)*

Item Code	Assembly Thickness	Construction Details	Performance		Reference Number			Notes	Rec Hours
			Load	Time	Pre-BMS-92	BMS-92	Post-BMS-92		
FC-5-RC-42	$5\frac{1}{2}$"	Composite ribbed concrete slab assembly; see note 17 for details	See note 16	2 hr			43	16,17	2
FC-3-RC-43	3"	2500 psi concrete; $\frac{5}{8}$" cover; fully restrained at test	See note 16	30 min			43	16	$\frac{1}{2}$
FC-3-RC-44	3"	2000 psi concrete; $\frac{5}{8}$" cover; free or partial restraint at test	See note 16	45 min			43	16	$\frac{3}{4}$
FC-4-RC-45	4"	2500 psi concrete; $\frac{5}{8}$" cover; fully restrained at test	See note 16	40 min			43	16	$\frac{2}{3}$
FC-4-RC-46	4"	2000 psi concrete; $\frac{3}{4}$" cover; free or partial restraint at test	See note 16	1 hr 15 min			43	16	$1\frac{1}{4}$
FC-5-RC-47	5"	2500 psi concrete; $\frac{3}{4}$" cover; fully restrained at test	See note 16	1 hr			43	16	1
FC-5-RC-48	5"	2000 psi concrete; $\frac{3}{4}$" cover; free or partial restraint at test	See note 16	1 hr 30 min			43	16	$1\frac{1}{2}$
FC-6-RC-49	6"	2500 psi concrete; 1" cover; fully restrained at test	See note 16	1 hr 30 min			43	16	$1\frac{1}{2}$
FC-6-RC-50	6"	2900 psi concrete; 1" cover free or partial restraint at test	See note 16	2 hr			43	16	2

(Sheet 5 of 5)

Notes:
1. British test.
2. Failure mode — local back face temperature rise.
3. Tested for grade "C" (2 hr) fire resistance.
4. Collapse imminent following hose stream.
5. Failure mode: flame-thru.
6. Void formed with explosive force and report.
7. Achieved grade "B" (4 hr) fire resistance (British).
8. Failure mode — collapse.
9. Test was run to 2 hr, but specimen was partially supported by the furnace at $1\frac{1}{4}$ hr.
10. Failure mode: average back face temperature.
11. Recommended endurance is for non-load-bearing performance only.
12. Floor maintained load-bearing ability to 2 hr at which point test was terminated.
13. Test was run to 3 hr at which time failure mode 2 (above) was reached in spite of crack formation at 29 min.
14. Tested for grade "A" (6 hr) fire resistance.
15.

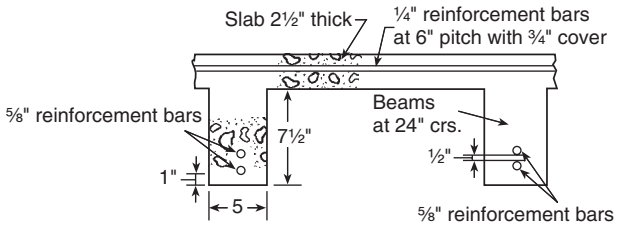

16. Load unspecified.
17. Total assembly thickness $5\frac{1}{2}$". 3" thick blocks of molded excelsior bonded with portland cement used as inserts with $2\frac{1}{2}$" cover (concrete) above blocks and $\frac{3}{4}$" gypsum plaster below. 9" wide ribs containing reinforcing steel of unspecified size interrupted 20" wide segments of slab composite (i.e., plaster, excelsior blocks, concrete cover).

--`,,```,,,,````-`-`,,`,,`,`,,`---
Copyright National Fire Protection Association
Provided by IHS under license with NFPA
No reproduction or networking permitted without license from IHS
Not for Resale

FIGURE O.4.5.50 Floor/Ceiling Assemblies — Steel Structural Elements.

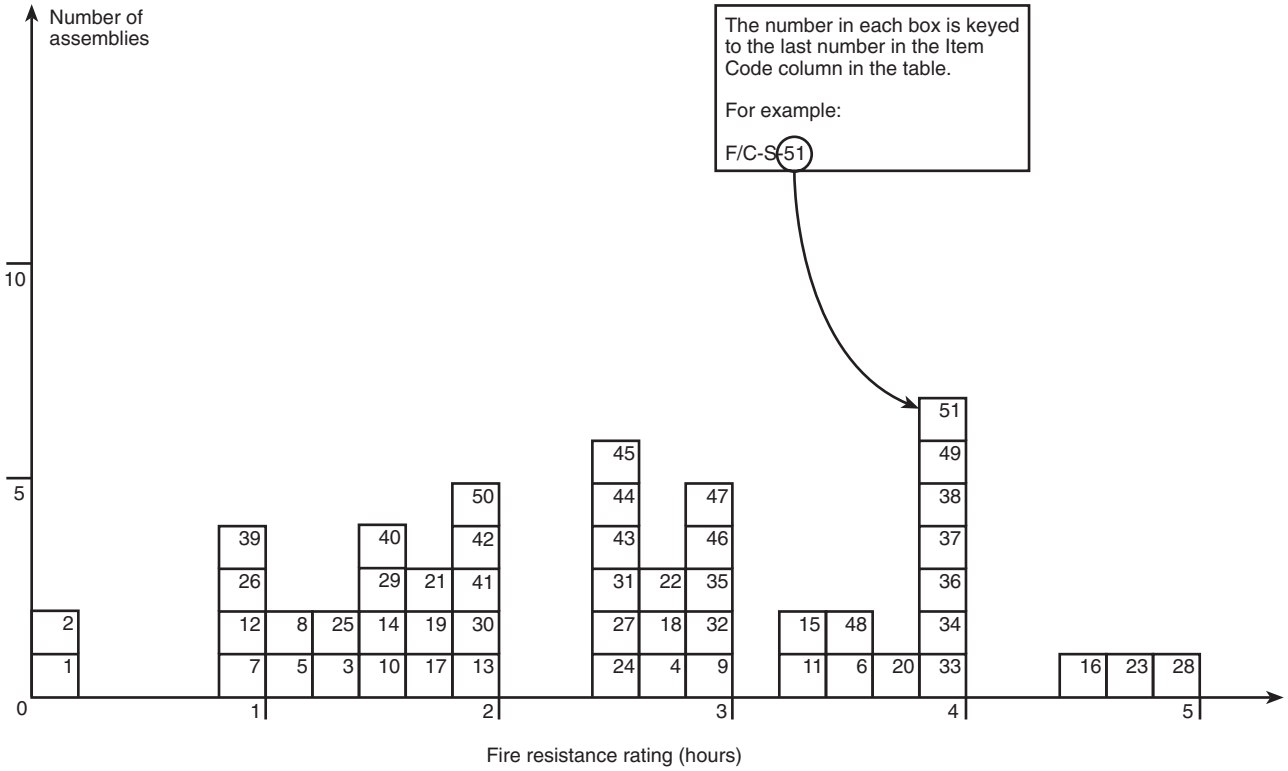

Table O.4.5.50 Floor/Ceiling Assemblies — Steel Structural Elements

Item Code	Membrane Thickness	Construction Details	Performance		Reference Number			Notes	Rec Hours
			Load	Time	Pre-BMS-92	BMS-92	Post-BMS-92		
F/C-S-1	0"	10' × 13' 6"; S.J. 103-24" O.C.; deck 2" concrete; membrane: none	145 psf	7 min			3	1,2, 3,8	0
F/C-S-2	0"	10' × 13' 6" S.J. 103-24" O.C.; deck 2" concrete; membrane: none	145 psf	7 min			3	1,2, 3,8	0
F/C-S-3	$^1/_2$"	10' × 13' 6" S.J. 103-24" O.C.; deck 2" concrete 1:2:4; membrane: 12" O.C. furring clips — A, B, G; no extra reinforcement; plaster $^1/_2$" 1.5:2.5	145 psf	1 hr 15 min			3	2,3,8	$1^1/_4$
F/C-S-4	$^1/_2$"	10' × 13' 6" S. J. 103-24" O.C.; deck 2" concrete 1:2:4; membrane: 16" O.C. furring clips — D, E, F, G; diagonal wire reinforcement; $^1/_2$" plaster 1.5:2.5	145 psf	2 hr 46 min			3	3,8	$2^3/_4$
F/C-S-5	$^1/_2$"	10' × 13' 6" S.J. 103-24" O.C.; deck 2" concrete 1:2:4; membrane: furring 16" O.C.; clip A, B, G; no extra reinforcement; plaster $^1/_2$" 1.5:2.5	145 psf	1 hr 4 min			3	2,3,8	1
F/C-S-6	$^1/_2$"	10' × 13' 6"; S.J. 103-24" O.C.; deck 2" concrete; 1:2:4 membrane: furring 16" O.C.; clips — D, E, F, G; hexagonal mesh reinforcement $^1/_2$" plaster	145 psf	3 hr 28 min			3	2,4,8	$2^1/_3$
F/C-S-7	$^1/_2$"	10' × 13' 6"; S. J. 103-24" O.C.; deck 4 lb rib lath; 6" × 6" × 10 × 10 ga. reinforcement; 2" deck gravel concrete; membrane: furring 16" O.C.; clips — C.E.; reinforcement: no; $^1/_2$" plaster — 1.5:2.5 mill mix	n/a	55 min			3	5,8	$^3/_4$

(Sheet 1 of 5)

Copyright National Fire Protection Association
Provided by IHS under license with NFPA
No reproduction or networking permitted without license from IHS
Not for Resale

Table O.4.5.50 Floor/Ceiling Assemblies — Steel Structural Elements *(Continued)*

Item Code	Membrane Thickness	Construction Details	Performance		Reference Number			Notes	Rec Hours
			Load	Time	Pre-BMS-92	BMS-92	Post-BMS-92		
F/C-S-8	1/2"	Spec. 9' × 4' 4"; S.J. 103 bar joists - 18" O.C.; membrane: furring - 3/4" C.R.S. — 16" O.C.; clips — C.E.; reinforcement: no ; 1/2" plaster - 1.5:2.5 mill mix; deck: 4 lb rib lath base; 6" × 6" - 10 × 10 ga. reinforcement; 2" deck 1:2:4 gravel concrete	300 psf	1 hr 10 min			3	2,3,8	1
F/C-S-9	5/8"	10' × 13' 6" ; S.J. 103 — 24" O.C.; deck 2" concrete 1:2:4; membrane: furring 12" O.C.; clips A, B, G; extra "A" clips reinforcement: 5/8" plaster — 1.5:2; 1.5:3	145 psf	3 hr			3	6,8	3
F/C-S-10	5/8"	18' × 13' 6"; joists S.J. — 103-24" O.C.; deck: 4 lb rib lath; 6" × 6" - 10 × 10 ga. reinforcement: 2" deck, 1:2:3.5 gravel concrete membrane, furring, spacing, 16" O.C.; clips C.E.; reinforcement: no; 5/8" plaster — 1.5:2.5 mill mix	145 psf	1 hr 25 min			3	2,3,8	1 1/3
F/C-S-11	5/8"	10' × 13' 6"; S.J. 103 — 24" O.C.; deck: 2" concrete 1:2:4; membrane: furring 12" O.C.; clips D, E, F, G, diagonal wire reinforcement: 5/8" plaster — 1.5:2; 0.5:3	145 psf	3 hr 15 min			3	2,4,8	3 1/4
F/C-S-12	5/8"	10' × 13' 6"; joists SJ 103 — 24" O.C.; deck: 3.4 lb rib lath; reinforcement - 6" × 6" 10 × 10 ga.; 2" deck - 1:2:4 gravel concrete; membrane: furring 16" O.C.; clips D, E, F, G; no reinforcement: 5/8" plaster — 1.5:2.5	145 psf	1 hr			3	7,8	1
F/C-S-13	3/4"	Spec. 9' × 4' 4"; SJ 103 — 18" O.C.; deck: 4 lb rib. lath; 6" × 6" - 10 × 10 ga. reinforcement; 2" deck 1:2:4 gravel concrete; membrane, furring 3/4" C.R.S. 16" O.C.; clips C, E; reinforcement: none; 3/4" plaster — 1.5:2.5 mill mix	300 psf	1 hr 56 min			3	3,8	1 3/4
F/C-S-14	7/8"	Floor finish — 1" concrete; plate cont. weld; 4" - 7.7 lb I beams; ceiling 1/4" rods 12" O.C.; 7/8" gyp. sand plaster	105 psf	1 hr 35 min			6	2,4,9, 10	1 1/2
F/C-S-15	1"	Floor finish — 1 1/2" L.W. concrete; 1/2" limestone cement; plate cont. weld; 5" - 10 lb I beams; ceiling 1/4" rods, 12" O.C. tack welded to beams metal lath — 1" P.C. plaster	165 psf	3 hr 20 min			6	4,9,11	
F/C-S-16	1"	10' × 13' 6"; SJ 103 — 24" O.C; deck 2" concrete — 1:2:4; membrane: furring 12" O.C.; clips D, E, F, G; plaster — hexagonal mesh reinforcement; 1" thick — 1.5:2; 1.5:3	145 psf	4 hr 26 min			3	2,4,8	4 1/3
F/C-S-17	1"	10' × 13' 6"; joists SJ 103 — 24" O.C.; deck 3.4 lb rib lath; reinforcement: 6" × 6" 10 × 10 ga.; 2" deck 1:2:4 gravel concrete; membrane: furring 16" O.C.; clips D, E, F, G; 1" plaster	145 psf	1 hr 42 min			3	2,4,8	1 2/3
F/C-S-18	1 1/8"	10" × 13' 6"; SJ 103 — 24" O.C.; deck: 2" concrete 1:2:4; membrane: furring 12" O.C.; clips C, E, F, G; diag. wire reinforcement; 1 1/8" plaster	145 psf	2 hr 44 min			3	2,4,8	2 2/3
F/C-S-19	1 1/8"	10' × 13' 6"; joists S.J. 103 — 24" O.C. deck: 1 1/2" gypsum concrete over 1/2" gypsum board base; membrane furring 12" O.C. plaster 1 1/8" 1.5:2; 1.5:3; clips D, E, F, G	145 psf	1 hr 40 min			3	2,3,8	1 2/3
F/C-S-20	1 1/8"	2 1/2" cinder concrete; 1/2" topping; plate 6" welds 12" O.C.; 5" - 18.9 lb H center; 5" - 10 lb "I" ends; 1" channel 18" O.C.; 1 1/8" gypsum sand plaster	150 psf	3 hr 43 min			6	2,4,9, 11	3 2/3
F/C-S-21	1 1/4"	10' × 13' 6"; joists SJ 103 — 24" O.C.; deck: 1 1/2" gypsum concrete over 1/2" gypsum board base; membrane: furring 12" O.C. clips D, E, F, G; 1 1/4" plaster 1.5:2; 1.5:3	145 psf	1 hr 48 min			3	2,3,8	1 2/3

(Sheet 2 of 5)

Copyright National Fire Protection Association
Provided by IHS under license with NFPA
No reproduction or networking permitted without license from IHS
Not for Resale

Table O.4.5.50 Floor/Ceiling Assemblies — Steel Structural Elements *(Continued)*

Item Code	Membrane Thickness	Construction Details	Performance		Reference Number			Notes	Rec Hours
			Load	Time	Pre-BMS-92	BMS-92	Post-BMS-92		
F/C-S-22	1 1/4"	Floor finish 1 1/2" limestone concrete; 1/2" sand cement topping; plate to beam 3 1/2"; 12" O.C. welded; 5" 10 lb "I" beam; 1" channels 18" O.C.; 1 1/4" wood fiber gypsum sand plaster on metal lath	292 psf	2 hr 45 min			6	2,4,9, 10	2 3/4
F/C-S-23	1 1/2"	2 1/2" L.W. (gas. exp.) concrete; deck: 1/2" topping; plate 6 1/4" welds 12" O.C.; beams: 5" - 18.9 lb H center; 5" - 10 lb "I" ends; membrane: 1" channel 18" O.C.; 1 1/2" gypsum sand plaster	150 psf	4 hr 42 min			6	2,4,9	4 2/3
F/C-S-24	1 1/2"	Floor finish 1 1/2" limestone concrete; 1/2" cement topping; plate 3 1/2" - 12" O.C. welded; 5" - 10 lb "I" beam; ceiling: 1" channel — 18" O.C.; 1 1/2" gypsum plaster	292 psf	2 hr 34 min			6	2,4,9, 10	2 1/2
F/C-S-25	1 1/2"	Floor finish 1 1/2" gravel concrete on exp. metal; plate - cont. weld; 4" 7.7 lb "I" beams; ceiling 1/4" rods - 12" O.C. welded to beams; 1 1/2" fiber gypsum sand plaster	70 psf	1 hr 24 min			6	2,4,9, 10	1 1/3
F/C-S-26	2 1/2"	Floor finish - bare plate; 6 1/4" welding - 12" O.C.; 5"-18.9 lb H girder (inner); 5" 10 lb "I" girder (2 outer); 1" channel 18" O.C.; 2" reinforced gypsum tile; 1/2" gypsum sand plaster	122 psf	1 hr			6	7,9,11	1
F/C-S-27	2 1/2"	Floor finish - 2" gravel concrete; plate to beam 3 1/2 - 12" O.C. welded; 4" 7.7 lb "I" beams; 2" gypsum ceiling tiles; 1/2" 1:3 gypsum sand plaster	105 psf	2 hr 31 min			6	2,4,9, 10	2 1/2
F/C-S-28	2 1/2"	Floor finish - 1 1/2" gravel concrete; 1/2" gypsum asphalt; plate continuous weld 4" -7.7 lb "I" beam; 12" 31.8 lb "I" beam - girder @ 5' from 1 end; 1" channels 18" O.C.; 2" reinforcement gypsum tile; 1/2" 1:3 gypsum sand plaster	200 psf	4 hr 55 min			6	2,4,9, 11	4 2/3
F/C-S-29	3/4"	Floor: 2" rein. concrete or 2" precast rein. gypsum tile; ceiling: 3/4" portland cement sand plaster 1:2 scratch and 1:3 brown coat with 15 lb hydrated lime and 3 lb of short asbestos fiber bag per cement or 3/4" sanded gypsum plaster 1:2 scratch and 1:3 brown coat	See note 12	1 hr 30 min		1		12,13, 14	1 1/2
F/C-S-30	3/4"	Floor: 2 1/4" rein. concrete or 2" rein. gypsum tile; the latter with 1/4" mortar finish; ceiling 3/4" sanded gypsum plaster; 1:2 for scratch coat and 1:3 for brown coat	See note 12	2 hr		1		12,13, 14	2
F/C-S-31	3/4"	Floor: 2 1/2" rein. concrete or 2" rein. gypsum tile; the latter with 1/4" mortar finish; ceiling: 1" neat gypsum plaster or 3/4" gypsum vermiculite plaster ratio of gypsum to fine vermiculite 2:1 to 3:1	See note 12	2 hr 30 min		1		12,13, 14	2 1/2
F/C-S-32	3/4"	Floor: 2 1/2" rein. concrete or 2" rein. gypsum tile; the latter with 1/2" mortar finish; ceiling: 1" neat gypsum plaster or 3/4" gypsum-vermiculite plaster ratio of gypsum to fine vermiculite 2:1to 3:1	See note 12	3 hr		1		12,13, 14	3
F/C-S-33	1"	Floor: 2 1/2" rein. concrete, or 2" rein. gypsum slabs, the latter with 1/2" mortar finish; ceiling: 1" gypsum vermiculite plaster applied on metal lath and ratio 2:1 to 3:1 gypsum to vermiculite by weight	See note 12	4 hr		1		12,13, 14	4

(Sheet 3 of 5)

Copyright National Fire Protection Association
Provided by IHS under license with NFPA
No reproduction or networking permitted without license from IHS
Not for Resale

Table O.4.5.50 Floor/Ceiling Assemblies — Steel Structural Elements *(Continued)*

Item Code	Membrane Thickness	Construction Details	Performance		Reference Number			Notes	Rec Hours
			Load	Time	Pre-BMS-92	BMS-92	Post-BMS-92		
F/C-S-34	$2^1/_2$"	Floor: 2" rein. concrete or 2" precast rein. portland cement concrete or gypsum slabs, precast slabs to be finished with $^1/_4$" mortar top coat; ceiling: 2" precast reinforced gypsum tile, anchored into beams with metal ties or clips and covered with $^1/_2$" 1:3 sanded gypsum plaster	See note 12	4 hr		1		12,13, 14	4
F/C-S-35	1"	Floor: 1:3:6 portland cement, sand, and gravel concrete applied directly to the top of steel units and $1^1/_2$" thick at top of cells, plus $^1/_2$" 1:2 $^1/_2$ cement- sand finish, total thickness at top of cells, 2"; ceiling: 1" neat gypsum plaster, back of lath 2" or more from underside of cellular steel	See note 15	3 h		1		15,16, 17,18	3
F/C-S-36	1"	Floor: same as F/C-S-35 ceiling: 1" gypsum vermiculite plaster (ratio of gypsum to vermiculite 2:1 to 3:1), the back of lath 2" or more from underside of cellular steel	See note 15	4 hr		1		15,16, 17,18	4
F/C-S-37	1"	Floor: same as F/C-S-35 ceiling: 1" neat gypsum plaster; back of lath 9" or more from underside of cellular steel	See note 15	4 hr		1		15,16, 17,18	4
F/C-S-38	1"	Floor: same as F/C-S-35 ceiling: 1" gypsum vermiculite plaster (ratio of gypsum to vermiculite 2:1 to 3:1), the back of lath being 9" or more from underside of cellular steel	See note 15	5 hr		1		15,16, 17,18	5
F/C-S-39	$^3/_4$"	Floor: asbestos paper 14 lb/100 ft^2 cemented to steel deck with waterproof linoleum cement, wood screeds and $^7/_8$" wood floor; ceiling: $^3/_4$" sanded gypsum plaster 1:2 for scratch and 1:3 for brown coat	See note 19	1 hr		1		19,20, 21,22	1
F/C-S-40	$^3/_4$"	Floor: $1^1/_2$" 1:2:4 portland cement concrete; ceiling: $^3/_4$" sanded gypsum plaster 1:2 for scratch and 1:3 brown coat	See note 19	1 hr 30 min		1		19,20, 21,22	$1^1/_2$
F/C-S-41	$^3/_4$"	Floor: 2" 1:2:4 portland cement concrete; ceiling $^3/_4$" sanded gypsum plaster 1:2 for scratch and 1:3 brown coat	See note 19	2 hr		1		19,20, 21,22	2
F/C-S-42	1"	Floor: 2", 1:2:4 portland cement concrete; ceiling: 1" portland cement sand plaster with 10 lb of hydrated lime for a bag of cement 1:2$^1/_2$ for brown coat and 1:2 scratch coat	See note 19	2 hr		1		19,20, 21,22	2
F/C-S-43	$1^1/_2$"	Floor: 2", 1:2:4 portland cement concrete; ceiling: $1^1/_2$", 1:2 sanded gypsum plaster on ribbed metal lath	See note 19	2 hr 30 min		1		19,20, 21,22	$2^1/_2$
F/C-S-44	$1^1/_8$"	Floor: 2" 1:2:4 portland cement concrete; ceiling $1^1/_8$", 1:1 sanded gypsum plaster	See note 19	2 hr 30 min		1		19,20, 21,22	$2^1/_2$
F/C-S-45	1"	Floor: $2^1/_2$", 1:2:4 portland cement concrete; ceiling: 1", 1:2 sanded gypsum plaster	See note 19	2 hr 30 min		1		19,20, 21,22	$2^1/_2$
F/C-S-46	$^3/_4$"	Floor: $2^1/_2$", 1:2:4 portland cement concrete; ceiling: 1" neat gypsum plaster or $^3/_4$" gypsum vermiculite plaster, ratio of gypsum to vermiculite 2:1 to 3:1	See note 19	3 hr		1		19,20, 21,22	3
F/C-S-47	$1^1/_8$"	Floor: $2^1/_2$", 1:2:4 portland cement, sand and cinder concrete plus $^1/_2$", 1:2 $^1/_2$ cement-sand finish; total thickness 3"; ceiling: $1^1/_8$", 1:1 sanded gypsum plaster	See note 19	3 hr		1		19,20, 21,22	3
F/C-S-48	$1^1/_8$"	Floor: $2^1/_2$" gas expanded portland cement sand concrete plus $^1/_2$", 1:2 $^1/_2$ cement-sand finish; total thickness 3"; ceiling; $1^1/_8$", 1:1 sanded gypsum plaster	See note 19	3 hr 30 min		1		19,20, 21,22	$3^1/_2$

(Sheet 4 of 5)

Copyright National Fire Protection Association
Provided by IHS under license with NFPA
No reproduction or networking permitted without license from IHS
Not for Resale

Table O.4.5.50 Floor/Ceiling Assemblies — Steel Structural Elements *(Continued)*

Item Code	Membrane Thickness	Construction Details	Performance		Reference Number			Notes	Rec Hours
			Load	Time	Pre-BMS-92	BMS-92	Post-BMS-92		
F/C-S-49	1"	Floor: $2^1/_2$", 1:2:4 portland cement concrete; ceiling: 1" gypsum vermiculite plaster; ratio of gypsum to vermiculite 2:1 to 3:1	See note 19	4 hr		1		19,20, 21,22	4
F/C-S-50	$2^1/_2$"	Floor: 2", 1:2:4 portland cement concrete; ceiling 2" interlocking gypsum tile supported on upper face of lower beam flange, $^1/_2$" 1:3 sanded gypsum plaster	See note 19	2 hr		1		19,20, 21,22	2
F/C-S-51	$2^1/_2$"	Floor: 2", 1:2:4 portland cement concrete; ceiling: 2" precast metal rein. gypsum tile, $^1/_2$" 1:3 sanded gypsum plaster (tile clipped to channels that are clipped to lower flange of beams)	See note 19	4 hr		1		19,20, 21,22	4

(Sheet 5 of 5)

Notes:
1. No protective membrane over structural steel.
2. Performance time indicates first end point reached; only several tests were continued to points where other failures occurred.
3. Load failure.
4. Thermal failure.
5. This is an estimated time to load bearing failure. The same joist and deck specimen was used for a later test with different membrane protection.
6. Test stopped at 3 hr to reuse specimen; no end point reached.
7. Test stopped at 1 hr to reuse specimen; no end point reached.
8. All plaster used = gypsum.
9. Specimen size — 18' × $13^1/_2$'. Floor deck — base material - $^1/_2$" × 18' steel plate welded to "I" beam.
10. I beams — 24" O.C.
11. I beams — 48" O.C.
12. Apply to open web joints, pressed steel joists, or rolled steel beams, which are not stressed beyond 18,000 lb/in.^{2} in flexure for open-web pressed, or light rolled steel joists and 20,000 lb/in.^{2} for American standard or heavier rolled beams.
13. Ratio of weight of portland cement to fine and coarse aggregates combined for floor slabs shall not be less than 1:6 $^1/_2$.
14. Plaster for ceiling shall be applied on metal lath that shall be tied to supports to give the equivalent of single No. 18 gauge steel wires 5" O.C.
15. Load: maximum fiber stress in steel not to exceed 16,000 psi.
16. Prefabricated units 2 ft. wide with length equal to the span, composed of 2 pieces of No. 18 gauge formed steel welded together to give 4 longitudinal cells.
17. Depth not less than 3" and distance between cells not less than 2".
18. Ceiling: metal lath tied to furring channels secured to runner channels hung from cellular steel.
19. Load: rolled steel supporting beams and steel plate base shall not be stressed beyond 20,000 psi in flexure.
Formed steel (with wide upper flange) construction shall not be stressed beyond 16,000 psi.
20. Some type of expanded metal or woven wire shall be imbedded to prevent cracking in concrete flooring.
21. Ceiling plaster shall be on metal lath wired to rods or channels that are clipped or welded to steel construction. Lath shall be no smaller than 18 gauge steel wire and not more than 7" O.C.
22. The securing rods or channels shall be at least as effective as single $^3/_{16}$" rods with 1" of their length bent over the lower flanges of beams with the rods or channels tied to this clip with 14 gauge iron wire.

Copyright National Fire Protection Association
Provided by IHS under license with NFPA
No reproduction or networking permitted without license from IHS
Not for Resale

FIGURE O.4.5.51 Floor/Ceiling Assemblies — Wood Joist.

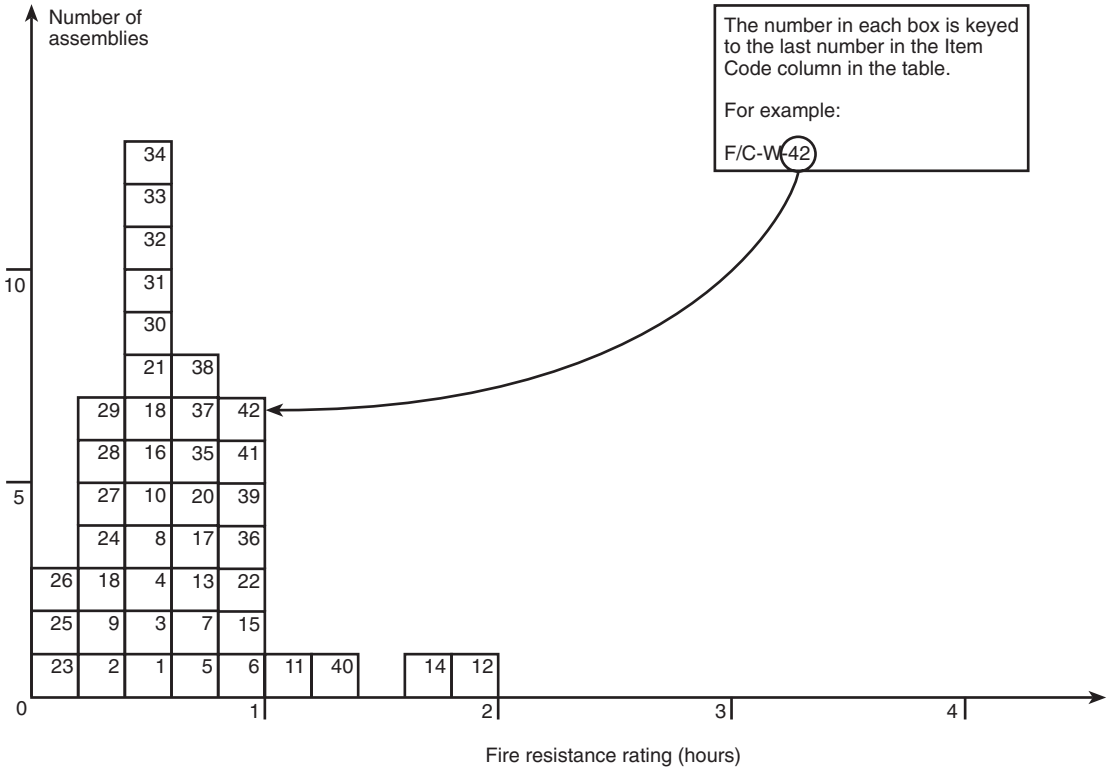

Table O.4.5.51 Floor/Ceiling Assemblies — Wood Joist

Item Code	Membrane Thickness	Construction Details	Performance		Reference Number			Notes	Rec Hours
			Load	Time	Pre-BMS-92	BMS-92	Post-BMS-92		
F/C-W-1	$^3/_8$"	12' clear span — 2" × 9" wood joists — 18" O.C. deck — 1" T&G; filler: 3" of ashes on $^1/_2$" boards nailed to joist sides 2" from bottom; 2" air space; membrane — $^3/_8$" gypsum board	60 psf	36 min			7	1,2	$^1/_2$
F/C-W-2	$^1/_2$"	12' clear span — 2" × 7" joists; 15" O.C.; deck — 2" × $1^1/_2$" center bridging at center; deck — 1" nominal lumber; membrane — $^1/_2$" fiberboard	60 psf	22 min			7	1,2,3	$^1/_4$
F/C-W-3	$^1/_2$"	12' clear span — 2" × 7" wood joists, 16" O.C. deck — 2" × $1^1/_2$" bridging at center; deck — 1" T&G membrane — $^1/_2$" fiberboard; 2 coats "distemper" paint	30 psf	28 min			7	1,3,15	$^1/_3$
F/C-W-4	$^3/_{16}$"	12' clear span — 2" × 7" wood joists, 16" O.C. deck — 2" × $1^1/_2$" bridging at center span; deck: 1" nominal lumber; membrane: $^1/_2$" fiberboard under $^3/_{16}$" gypsum plaster	30 psf	32 min			7	1,2	$^1/_2$
F/C-W-5	$^5/_8$"	As per F/C-W-4 except membrane is $^5/_8$" lime plaster	70 psf	48 min			7	1,2	$^3/_4$
F/C-W-6	$^5/_8$"	As per F/C-W-5 except membrane is $^5/_8$" gypsum plaster on 22 gauge $^3/_8$" metal lath	70 psf	49 min			7	1,2	$^3/_4$
F/C-W-7	$^1/_2$"	As per F/C-W-6 except membrane is $^1/_2$" fiberboard under $^1/_2$" gypsum plaster	60 psf	43 min			7	1,2,3	$^2/_3$

(Sheet 1 of 4)

Copyright National Fire Protection Association
Provided by IHS under license with NFPA
No reproduction or networking permitted without license from IHS
Not for Resale

Table O.4.5.51 Floor/Ceiling Assemblies — Wood Joist *(Continued)*

Item Code	Membrane Thickness	Construction Details	Performance		Reference Number			Notes	Rec Hours
			Load	Time	Pre-BMS-92	BMS-92	Post-BMS-92		
F/C-W-8	1/2"	As per F/C-W-7 except membrane is 1/2" gypsum board	60 psf	33 min			7	1,2,3	1/2
F/C-W-9	9/16"	12' clear span — 2" × 7" wood joists; 15" O.C. deck — 2" × 1 1/2" center bridging; deck — 1" nominal lumber; membrane: — 3/8" gypsum board; 3/8" gypsum plaster	60 psf	24 min			7	1,2,3	1/3
F/C-W-10	5/8"	As per F/C-W-9 except membrane is 5/8" gypsum plaster on wood lath	60 psf	27 min			7	1,2,3	1/3
F/C-W-11	7/8"	12' clear span — 2" × 9" wood joists; 15" O.C. 2" × 1 1/2" bridging at center span; deck: 1" T&G membrane, original ceiling joists have 3/8" plaster on wood lath; 4" metal hangers attached below joists creating 15" chases filled with mineral wool and closed with 7/8" plaster (gypsum) on 3/8" S.W.M. metal lath to form new ceiling surface	75 psf	1 hr 10 min			7	1,2	1
F/C-W-12	7/8"	12' clear span — 2" × 9" wood joists - 15" O.C. 2" × 1 1/2" bridging at center; deck: 1" T&G; membrane: 3" mineral wool below joists; 3" hangers to channel below joists; 7/8" gypsum plaster on metal lath attached to channels	75 psf	2 hr			7	1,4	2
F/C-W-13	7/8"	12' clear span — 2" × 9" wood joists - 16" O.C. 2" × 1 1/2" bridging at center span; deck: 1" T&G on 1" bottoms on 3/4" glass wool strips on 3/8" gypsum board nailed to joists; membrane: 3/4" glass wool strips on joists; 3/8" perforated gypsum lath; 1/2" gypsum plaster	60 psf	41 min			7	1,3	2/3
F/C-W-14	7/8"	12' clear span — 2" × 9" wood joists - 15" O.C. deck: 1" T&G; membrane: 3" foam concrete in cavity on 1/2" boards nailed to joists; wood lath nailed to 1" × 1 1/4" straps 14" O.C. across joists; 7/8" gypsum plaster	60 psf	1 hr 40 min			7	1,5	1 2/3
F/C-W-15	7/8"	12' clear span — 2" × 9" wood joists — 18" O.C.; deck: 1" T&G; membrane: 2" foam concrete on 1/2" boards nailed to joist sides 2" from joists bottom; 2" airspace; 1" × 1 1/4" wood straps 14" O.C. across joists; 7/8" lime plaster on wood lath	60 psf	53 min			7	1,2	3/4
F/C-W-16	7/8"	12' clear span — 2" × 9" wood joists; deck: 1" T&G; membrane: 3" ashes on 1/2" boards nailed to joist sides 2" from joist bottom; 2" air space; 1" × 1 1/4" straps (wood) 14" O.C.; 7/8" gypsum plaster on wood lath	60 psf	28 min			7	1,2	1/3
F/C-W-17	7/8"	As per F/C-W-16 but with lime plaster mix	60 psf	41 min			7	1,2	2/3
F/C-W-18	7/8"	12' clear span — 2" × 9" wood joists - 18" O.C. 2" × 1 1/2" center bridging; deck: 1" T&G; membrane: 7/8" gypsum plaster on wood lath	60 psf	36 min			7	1,2	1/2
F/C-W-19	7/8"	As per F/C-W-18 except with lime plaster membrane and deck is 1" nominal boards (plain edge)	60 psf	19 min			7	1,2	1/4
F/C-W-20	7/8"	As per F/C-W-19 except deck is 1" T&G boards	60 psf	43 min			7	1,2	2/3

(Sheet 2 of 4)

Copyright National Fire Protection Association
Provided by IHS under license with NFPA
No reproduction or networking permitted without license from IHS
Not for Resale

Table O.4.5.51 Floor/Ceiling Assemblies — Wood Joist *(Continued)*

Item Code	Membrane Thickness	Construction Details	Performance		Reference Number			Notes	Rec Hours
			Load	Time	Pre-BMS-92	BMS-92	Post-BMS-92		
F/C-W-21	1"	12' clear span — 2" × 9" wood joists — 16" O.C. 2" × $1^1/_2$" center bridging; deck: 1" T&G; membrane: $^3/_8$" gypsum base board; $^5/_8$" gypsum plaster	70 psf	29 min			7	1,2	$^1/_3$
F/C-W-22	$1^1/_8$"	12' clear span — 2" × 9" wood joists - 16" O.C. bridging — 2" × 2" wood at center; deck: 1" T&G; membrane: hangers, channel with $^3/_8$" gypsum baseboard affixed under $^3/_4$" gypsum plaster	60 psf	1 hr			7	1,2,3	1
F/C-W-23	$^3/_8$"	Deck: 1" nominal lumber; joists: 2" × 7", 15" O.C.; membrane: $^3/_8$" plasterboard with plaster skim coat	60 psf	$11^1/_2$ min			12	2,6	$^1/_6$
F/C-W-24	$^1/_2$"	Deck: 1" T&G lumber; joists: 2" × 9", 16" O.C.; membrane: $^1/_2$" plasterboard	60 psf	18 min			12	2,7	$^1/_4$
F/C-W-25	$^1/_2$"	Deck: 1" T&G lumber; joists: 2" × 7", 16" O.C.; membrane: $^1/_2$" fiber insulation board	30 psf	8 min			12	2,8	$^2/_{15}$
F/C-W-26	$^1/_2$"	Deck: 1" nominal lumber; joists: 2" × 7", 15" O.C.; membrane: $^1/_2$" fiber insulation board	60 psf	8 min			12	2,9	$^2/_{15}$
F/C-W-27	$^5/_8$"	Deck: 1" nominal lumber; joists; 2" × 7", 15" O.C.; membrane: $^5/_8$" gypsum plaster on wood lath	60 psf	17 min			12	2,10	$^1/_4$
F/C-W-28	$^5/_8$"	Deck: 1" T&G lumber; joists: 2" × 9", 16" O.C.; membrane: $^1/_2$" fiber insulation board: $^1/_2$" plaster	60 psf	20 min			12	2,11	$^1/_3$
F/C-W-29	No membrane	Exposed wood joists	See note 13	15 min		1		1,12, 13,14	$^1/_4$
F/C-W-30	$^3/_8$"	Gypsum wallboard: $^3/_8$" or $^1/_2$" with $1^1/_2$" No. 15 gauge nails with $^3/_{16}$" heads spaced 6" centers with asbestos paper applied with paperhangers paste and finished with casein paint	See note 13	25 min		1		1,12, 13,14	$^1/_2$
F/C-W-31	$^1/_2$"	Gypsum wallboard: $^1/_2$" with $1^3/_4$" No. 12 gauge nails with $^1/_2$" heads, 6" O.C. and finished with casein paint	See note 13	25 min		1		1,12, 13,14	$^1/_2$
F/C-W-32	$^1/_2$"	Gypsum wallboard: $^1/_2$" with $1^1/_2$" No. 12 gauge nails with $^1/_2$" heads, 18" O.C. with asbestos paper applied with paperhangers paste and secured with $1^1/_2$" No. 15 gauge nails with $^3/_{16}$" heads and finished with casein paint; combined nail spacing 6" O.C.	See note 13	30 min		1		1,12, 13,14	$^1/_2$
F/C-W-33	$^3/_8$"	Gypsum wallboard: 2 layers $^3/_8$" secured with $1^1/_2$" No. 15 gauge nails with $^3/_8$" heads, 6" O.C.	See note 13	30 min		1		1,12, 13,14	$^1/_2$
F/C-W-34	$^1/_2$"	$^3/_8$" perforated gypsum lath plastered with $1^1/_8$" No. 13 gauge nails with $^5/_{16}$" heads; 4" O.C.; $^1/_2$" sanded gypsum plaster	See note 13	30 min		1		1,12, 13,14	$^1/_2$
F/C-W-35	$^1/_2$"	Same as F/C-W-34 except with $1^1/_8$" No. 13 gauge nails with $^3/_8$" heads; 4" O.C.	See note 13	45 min		1		1,12, 13,14	$^3/_4$
F/C-W-36	$^1/_2$"	$^3/_8$" perforated gypsum lath nailed with $1^1/_8$" No. 13 nails with $^3/_8$" heads; 4" O.C.; joints covered with 3" strips of metal lath; with $1^3/_4$" No. 12 nails with $^1/_2$" heads; 5" O.C. $^1/_2$" sanded gypsum plaster	See note 13	1 hr		1		1,12, 13,14	1

(Sheet 3 of 4)

--`,,```,,,,````-`-`,,`,,`,`,,`---

Copyright National Fire Protection Association
Provided by IHS under license with NFPA
No reproduction or networking permitted without license from IHS
Not for Resale

Table O.4.5.51 Floor/Ceiling Assemblies — Wood Joist *(Continued)*

Item Code	Membrane Thickness	Construction Details	Performance		Reference Number			Notes	Rec Hours
			Load	Time	Pre-BMS-92	BMS-92	Post-BMS-92		
F/C-W-37	1/2"	Gypsum lath 3/8" and lower layer of 3/8" perforated gypsum lath nailed with 1 3/4" No. 13 nails with 5/16" heads and 4" O.C.; 1/2" sanded gypsum plaster or 1/2" portland cement plaster	See note 13	45 min		1		1,12, 13,14	3/4
F/C-W-38	3/4"	Metal lath: nailed with 1 1/4" No. 11 nails with 3/8" heads or 6d common driven 1" and bent over; 6" O.C.; 3/4" sanded gypsum plaster	See note 13	45 min		1		1,12, 13,14	3/4
F/C-W-39	3/4"	Same as F/C-W-38 except nailed with 1 1/2" No. 11 barbed roof nails with 7/16" heads, 6" O.C.	See note 13	1 hr		1		1,12, 13,14	1
F/C-W-40	3/4"	Same as F/C-W-38 except with lath nailed to joists with additional supports for lath 27" O.C.; attached to alternate joists and consisting of 2 nails driven 1 1/4", 2" above bottom on opposite sides of the joists, one loop of No. 18 wire slipped over each nail; the ends twisted together below lath	See note 13	1 hr 15 min		1		1,12, 13,14	1 1/4
F/C-W-41	3/4"	Metal lath with 1 1/2" No. 11 barbed roof nails with 7/16" heads, 6" O.C. with 3/4" portland cement plaster for scratch and 1:3 for brown coat, 3 lb of asbestos fiber and 15 lb of hydrated lime per 94 lb bag of cement	See note 13	1 hr		1		1,12, 13,14	1
F/C-W-42	3/4"	Metal lath nailed with 8d 11 1/2 gauge barbed box nails 2 1/2" driven 1 1/4" on slant and bent over; 6" O.C.; 3/4" sanded gypsum plaster 1:2 scratch coat and 1:3 below coat	See note 13	1 hr		1		1,12, 13,14	1

(Sheet 4 of 4)

Notes:
1. Thickness indicates thickness of first membrane protection on ceiling surface.
2. Failure mode — flame thru.
3. Failure mode — collapse.
4. No endpoint reached at termination of test.
5. Failure imminent — test terminated.
6. Joist failure — 11.5 min, flame thru — 13 min, collapse — 24 min.
7. Joist failure — 17 min, flame thru — 18 min, collapse — 33 min.
8. Joist failure — 18 min, flame thru — 8 min, collapse — 30 min.
9. Joist failure — 12 min, flame thru — 8 min, collapse — 22 min.
10. Joist failure — 11 min, flame thru — 17 min, collapse — 27 min.
11. Joist failure — 17 min, flame thru — 20 min, collapse — 43 min.
12. Joists: 2" × 10" southern pine or Douglas fir; No. 1 common or better; subfloor: 3/4" wood sheathing diaphragm of asbestos paper, and finish of tongue and grove wood flooring.
13. Loadings: not more than 1000 psi maximum fiber stress in joists.
14. Perforations in gypsum lath are to be not less than 3/4" diameter with one perforation for not more than 16/in.^{2} diameter.
15. "Distemper" is a British term for a water-based paint such as whitewash or calcimine.

Copyright National Fire Protection Association
Provided by IHS under license with NFPA
No reproduction or networking permitted without license from IHS
Not for Resale

FIGURE O.4.5.52 Floor/Ceiling Assemblies — Hollow Clay Tile with Reinforced Concrete.

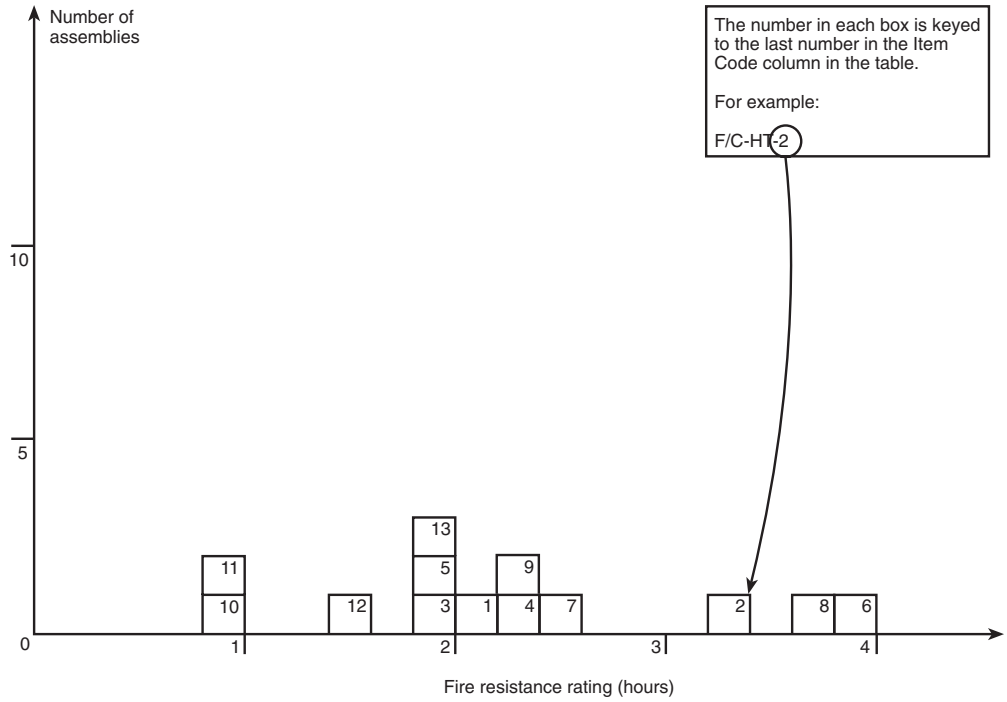

Table O.4.5.52 Floor/Ceiling Assemblies — Hollow Clay Tile with Reinforced Concrete

Item Code	Assembly Thickness	Construction Details	Performance		Reference Number			Notes	Rec Hours
			Load	Time	Pre-BMS-92	BMS-92	Post-BMS-92		
F/C-HT-1	6"	Cover: $1^1/_2$" concrete (6080 psi); 3 cell hollow clay tile; 12" × 12" × 4"; $3^1/_4$" concrete between tiles including two $^1/_2$" rebars with $^3/_4$" concrete cover; $^1/_2$" plaster cover, lower	75 psf	2 hr 7 min			7	1,2,3	2
F/C-HT-2	6"	Cover: $1^1/_2$" concrete (5840 psi); 3 cell hollow clay tiles; 12" × 12" × 4"; $3^1/_4$" concrete between tile including two $^1/_2$" rebars each with $^1/_2$" concrete cover and $^5/_8$" filler tiles between hollow tiles; $^1/_2$" plaster cover, lower	61 psf	3 hr 23 min			7	3,4,6	$3^1/_3$
F/C-HT-3	6"	Cover: $1^1/_2$" concrete (6280 psi); 3 cell hollow clay tiles 12" × 12" × 4"; $3^1/_4$" concrete between tiles including two $^1/_2$" rebars with $^1/_2$" cover; $^1/_2$" plaster cover, lower	122 psf	2 hr			7	1,3, 5,8	2
F/C-HT-4	6"	Cover: $1^1/_2$" concrete (6280) psi); 3 cell hollow clay tiles; 12" × 12" × 4"; $3^1/_4$" concrete between tiles including two $^1/_2$" rebars with $^3/_4$" concrete cover; $^1/_2$" plaster cover, lower	115 psf	2 hr 23 min			7	1,3,7	$2^1/_3$

(Sheet 1 of 2)

Copyright National Fire Protection Association
Provided by IHS under license with NFPA
No reproduction or networking permitted without license from IHS
Not for Resale

Table O.4.5.52 Floor/Ceiling Assemblies — Hollow Clay Tile with Reinforced Concrete *(Continued)*

Item Code	Assembly Thickness	Construction Details	Performance		Reference Number			Notes	Rec Hours
			Load	Time	Pre-BMS-92	BMS-92	Post-BMS-92		
F/C-HT-5	6"	Cover: $1^1/_2$" concrete (6470 psi); 3 cell hollow clay tiles 12" × 12" × 4"; $3^1/_4$" concrete between tiles including two $^1/_2$" rebars with $^1/_2$" cover; $^1/_2$" plaster cover, lower	122 psf	2 hr			7	1,3, 5,8	2
F/C-HT-6	8"	Floor cover: $1^1/_2$" gravel cement (4300 psi); tiles: 3 cell 12" × 12" × 6"; $3^1/_2$" space between tiles including two $^1/_2$" rebars with 1" cover from concrete bottom; cover: $^1/_2$" plaster, lower	165 psf	4 hr			7	1,3,9, 10	4
F/C-HT-7	9" (nom)	Deck: $^7/_8$" T&G on 2" × $1^1/_2$" bottoms (18" O.C.) $1^1/_2$" concrete cover (4600 psi); 3 cell hollow clay tiles 12" × 12" × 4"; 3" concrete between tiles including one $^3/_4$" rebar $^3/_4$" from tile bottom; $^1/_2$" plaster cover	95 psf	2 hr 26 min			7	4,11, 12,13	$2^1/_3$
F/C-HT-8	9" (nom)	Deck: $^7/_8$" T&G on 2" × $1^1/_2$" bottoms (18" O.C.) $1^1/_2$" concrete cover with 3850 psi; 3 cell hollow clay tiles 12" × 12" × 4"; 3" concrete between tiles including one $^3/_4$" rebar $^3/_4$" from tile bottoms; $^1/_2$" plaster cover	95 psf	3 hr 28 min			7	4,11, 12,13	
F/C-HT-9	9" (nom)	Deck: $^7/_8$" T&G on 2" × $1^1/_2$" bottoms (18" O.C.) $1^1/_2$" concrete cover (4200 psi); 3 cell hollow clay tiles 12" × 12" × 4"; 3" concrete between tiles including one $^3/_4$" rebar $^3/_4$" from tile bottoms; $^1/_2$" plaster cover	95 psf	2 hr 14 min			7	3,5, 8,11	
F/C-HT-10	$5^1/_2$"	Fire clay tile (4" thick); $1^1/_2$" concrete cover; for general details see note 15	See note 14	1 hr			43	15	1
F/C-HT-11	8"	Fire clay tile (6" thick); 2" cover	See note 14	1 hr			43	15	1
F/C-HT-12	$5^1/_2$"	Fire clay tile (4" thick); $1^1/_2$" cover; $^5/_8$" gypsum plaster lower	See note 14	$1^1/_2$ hr			43	15	$1^1/_2$
F/C-HT-13	8"	Fire clay tile (6" thick); 2" cover; $^5/_8$" gypsum plaster lower	See note 14	2 hr			43	15	$1^1/_2$

(Sheet 2 of 2)

Notes:
1. A generalized cross-section of this floor type follows:

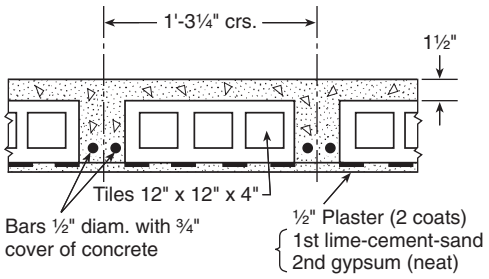

2. Failure mode — structural.
3. Plaster — base coat, lime-cement-sand; top coat, gypsum (neat).
4. Failure mode — collapse.
5. Test stopped before any end points were reached.
6. A generalized cross-section of this floor type follows:

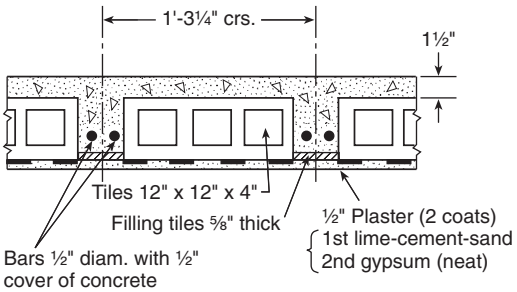

Copyright National Fire Protection Association
Provided by IHS under license with NFPA
No reproduction or networking permitted without license from IHS
Not for Resale

7. Failure mode — thermal - back face temperature rise.
8. Passed hose stream test.
9. Failed hose stream test.
10. Test stopped at 4 hr before any end points were reached.
11. A generalized cross-section of this floor type follows:

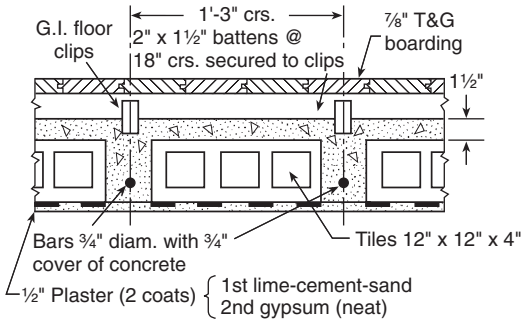

12. Plaster-base coat — retarded hemihydrate gypsum-sand; 2nd coat — neat gypsum.
13. Concrete in item 7 is P.C.-based but with crushed brick aggregates, while in item 8 river sand and river gravels are used with the P.C.
14. Load — unspecified.
15. The 12" × 12" fire-clay tiles were laid end to end in rows spaced $2^1/_2$" or 4" apart. The reinforcing steel was placed between these rows, and the concrete cast around them and over the tile to form the structural floor.

Table O.4.5.53 Reinforced Concrete Beams Depth 10" (250 mm) to Less Than 12" (300 mm)

Item Code	Depth	Construction Details	Performance		Reference Number			Notes	Rec Hours
			Load	Time	Pre-BMS-92	BMS-92	Post-BMS-92		
B-11-RC-1	11"	24" wide × 11" deep reinforced concrete "T" beam (3290 psi); details — see figure, note 5	8.8 tons	4 hr 2 min			7	1,2,14	4
B-10-RC-2	10"	24" wide × 10" deep reinforced concrete "T" beam (4370 psi); details — see figure, note 6	8.8 tons	1 hr 53 min			7	1,3	$1^3/_4$
B-10-RC-3	$10^1/_2$"	24" wide × $10^1/_2$" deep reinforced "T" beam (4450 psi) concrete; details — see figure, note 7	8.8 tons	2 hr 40 min			7	1,3	$2^2/_3$
B-11-RC-4	11"	24" wide × 11" deep reinforced concrete "T" beam (2400 psi); details — see figure, note 8	8.8 tons	3 hr 32 min			7	1,3,14	$3^1/_2$
B-11-RC-5	11"	24" wide × 11" deep reinforced concrete "T" beam (4250 psi); details — see figure, note 9	8.8 tons	3 hr 3 min			7	1,3,14	3
B-11-RC-6	11"	Concrete flange: 4" deep × 2' wide (4895 psi) concrete; 7" deep $6^1/_2$" wide beam; I beam reinforcement: 10" × $4^1/_2$" × 25 lb R.S.J.; 1" cover on flanges; rein.: $^3/_8$" diam. bars @ 6" pitch parallel to T; $^1/_4$" diam. bars perpendicular to T; 4" × 6" wire mesh 13 SWG; span: 11' restrained; details — see figure, note 10	10 tons	6 hr			7	1,4	6

(Sheet 1 of 2)

Copyright National Fire Protection Association
Provided by IHS under license with NFPA
No reproduction or networking permitted without license from IHS
Not for Resale

Table O.4.5.53 Reinforced Concrete Beams Depth 10" (250 mm) to Less Than 12" (300 mm) ***(Continued)***

Item Code	Depth	Construction Details	Performance		Reference Number			Notes	Rec Hours
			Load	Time	Pre-BMS-92	BMS-92	Post-BMS-92		
B-11-RC-7	11"	Concrete flange: 6' deep × 1' $6^1/_2$" wide (3525 psi) concrete; 5" deep × 8" wide precast concrete blocks $8^3/_4$" long; I beam reinforcement: 7" × 4" × 16 lb R.S.J. 2" cover on bottom; $1^1/_2$" cover on top; 2 rows $^1/_2$" diam. rods parallel to T; $^1/_8$" wire mesh perpendicular to 1" span 1'3" simply supported; details — see figure, note 11	3.9 tons	4 hr			7	1,2	4
B-11-RC-8	11"	Concrete flange: 4" × 2" (3525 psi) concrete; 7" × $4^1/_2$" (scaled from drawing) I beam reinforcement; 10" × $4^1/_2$" × 25 lb R.S.J.; no concrete cover on bottom; rein.: $^3/_8$" diam. bars @ 6" pitch parallel to T; $^1/_4$" bars perpendicular to T; span: 11" restricted	10 tons	4 hr			7	1,2,12	4
B-11-RC-9	$11^1/_2$"	24" wide × $11^1/_2$" deep reinforced concrete "T" beam (4390 psi); details — see figure, note 12	8.8 tons	3 hr 24 min			7	1,3	$3^1/_3$

(Sheet 2 of 2)

Notes:
1. Load concentrated at mid-span.
2. Achieved 4-hr performance (Class "B" — British).
3. Failure mode — collapse.
4. Achieved 6-hr performance (Class "A" — British).
5.

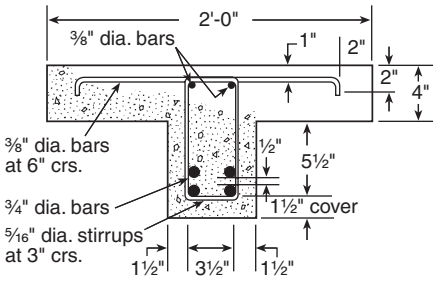

6.

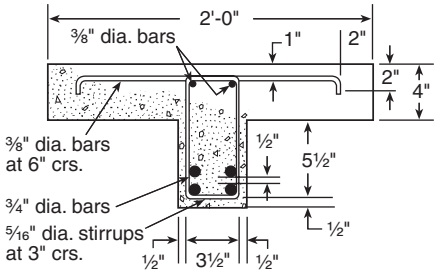

7.

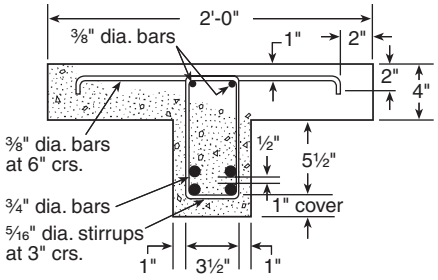

Copyright National Fire Protection Association
Provided by IHS under license with NFPA
No reproduction or networking permitted without license from IHS
Not for Resale

8.

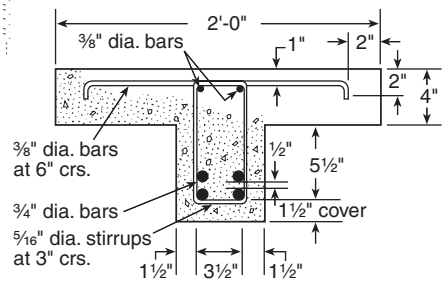

9.

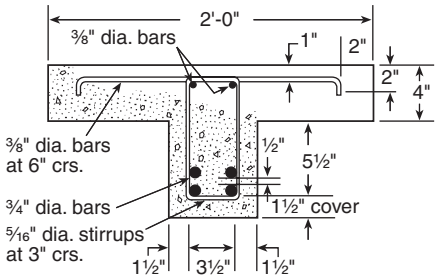

10.

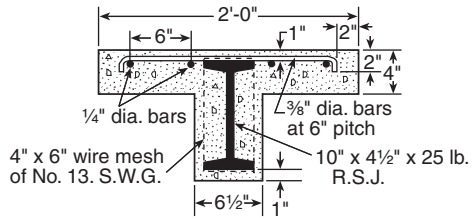

11. Span and end conditions: 10' — 3" (clear). Simply supported.

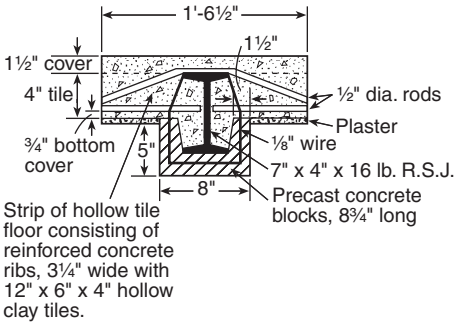

12.

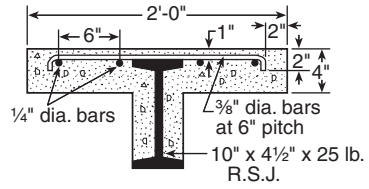

13.

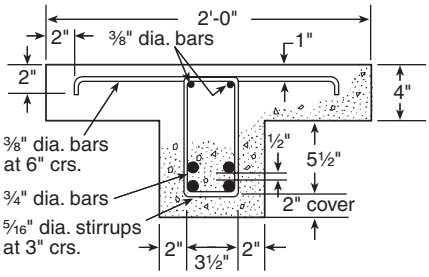

14. The different performances achieved by B-11-RC-1, B-11-RC-4, and B-11-RC-5 are attributable to differences in concrete aggregate compositions reported in the source document but unreported in this table. This demonstrates the significance of material composition in addition to other details.

Copyright National Fire Protection Association
Provided by IHS under license with NFPA
No reproduction or networking permitted without license from IHS
Not for Resale

Table O.4.5.54 Reinforced Concrete Beams Depth 12" (300 mm) to Less Than 14" (350 mm)

Item Code	Depth	Construction Details	Performance		Reference Number			Notes	Rec Hours
			Load	Time	Pre-BMS-92	BMS-92	Post-BMS-92		
B-12-RC-1	12"	12" × 8" section; 4160 psi aggregate concrete; reinforcing four $^{7}/_{8}$" rebars at corners; 1" below each surface; $^{1}/_{4}$" stirrups 10" O.C.	5.5 tons	2 hr			7	1	2
B-12-RC-2	12"	Concrete flange: 4" deep × 2' wide (3045 psi) @ 35 days; concrete beam: 8" deep; I beam reinforcement: 10" × 4$^{1}/_{2}$" × 25 lb R.S.J.; 1" cover on flanges; reinforcement: flange $^{3}/_{8}$" diam. bars @ 6" pitch parallel to T; flange $^{1}/_{4}$" diam. bars perpendicular to T; beam 4" × 6" wire mesh No. 13 S.W.G.; span: 10'3" simply supported	10 tons	4 hr			7	2,3,5	4
B-13-RC-3	13"	Concrete flange: 4" deep × 2' wide; (3825 psi) @ 46 days; concrete beam: 9" deep × 8$^{1}/_{2}$" wide; (scaled from drawing); I beam reinforcement: 10" × 4$^{1}/_{2}$" × 25 lb R.S.J.; 3" cover on bottom flange, 1" cover on top flange; reinforcement: flange $^{3}/_{8}$" diam. bars @ 6" pitch, parallel to T; $^{1}/_{4}$" diam. bars perpendicular to T; beam 4" × 6" wire mesh No. 13 S.W.G.; span 11' restrained	10 tons	6 hr			7	2,3,6, 8,9	4
B-12-RC-4	12"	Concrete flange: 4" deep × 2" wide; (3720 psi) @ 42 days; concrete beam: 8" deep × 8$^{1}/_{2}$" wide; (scaled from drawing) I beam reinforcement: 10" × 4$^{1}/_{2}$" × 25 lb R.S.J.; 2" cover bottom flange; 1" cover top flange: reinforcement: flange $^{3}/_{8}$" diam. bars @ 6" pitch parallel to T; $^{1}/_{4}$" diam. bars perpendicular to T; beam; 4" × 6" wire mesh, No. 13 S.W.G.; span: 11' restrained	10 tons	6 hr			7	2–4,7–9	4

Notes:
1. Qualified for 2-hr use. (Grade "C" — British test included hose stream and reload at 48 hours.)
2. Load concentrated at mid-span.
3. British test.
4. British test — qualified for 6-hr use (Grade A).
5.

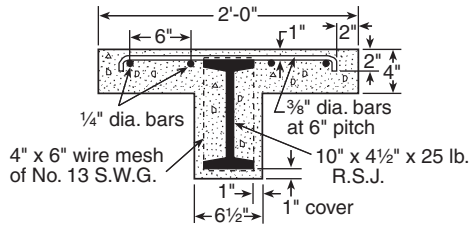

6.

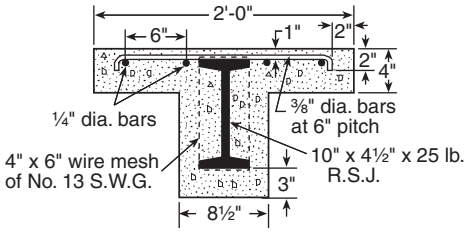

7.

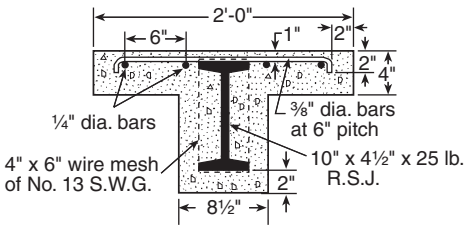

8. See Table O.4.5.55, note 5.
9. Hourly rating based upon B-12-RC-2 above.

Copyright National Fire Protection Association
Provided by IHS under license with NFPA
No reproduction or networking permitted without license from IHS
Not for Resale

Table O.4.5.55 Reinforced Concrete Beams Depth 14" (350 mm) to Less Than 16" (400 mm)

Item Code	Depth	Construction Details	Performance		Reference Number			Notes	Rec Hours
			Load	Time	Pre-BMS-92	BMS-92	Post-BMS-92		
B-15-RC-1	15"	Concrete flange: 4" deep × 2' wide (3290 psi) concrete; concrete beam: 10" deep × $8^1/_2$" wide; I beam reinforcement: 10" × $4^1/_2$" × 25 lb R.S.J.; 4" cover on bottom flange; 1" cover on top flange; reinforcement: flange; $^3/_8$" diam. bars @ 6" pitch parallel to T; $^1/_4$" diam. bars perpendicular to T; beam 4" × 6" wire mesh No. 13 S.W.G.; span: 11' restrained	10 tons	6 hr			7	1,2,3,5,6	4
B-15-RC-2	15"	Concrete flange: 4" deep × 2' wide (4820 psi) concrete; concrete beams: 10" deep × $8^1/_2$" wide; I beam reinforcement: 10" × $4^1/_2$" × 25 lb R.S.J.; 1" cover on top flange; 1" cover over wire mesh on bottom; reinforcement: flange $^3/_8$" diam. bars @ 6" pitch parallel to "T"; $^1/_4$" diam. bars perpendicular to "T"; beam 4" × 6" wire mesh No. 13 S.W.G.; span: 11' restrained	10 tons	6 hr			7	1,2,4,5,6	4

Notes:
1. Load concentrated at mid-span.
2. Achieved 6-hr fire rating (Class "A" — British).
3.

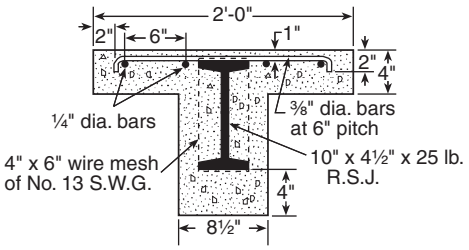

4.

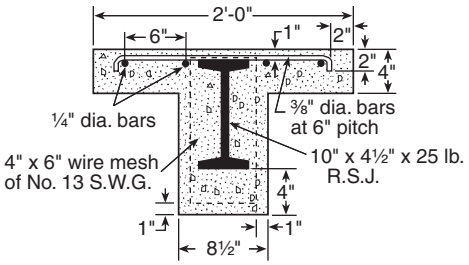

5. Section 43.147 of the 1979 Edition of the Uniform Building Code Standards provides:
"A restrained condition in fire tests, as used in this standard, is one in which expansion at the supports of a load-carrying element resulting from the effects of the fire is resisted by forces external to the element. An unrestrained condition is one in which the load-carrying element is free to expand and rotate at its support.
"(R)estraint in buildings is defined as follows: Floor and roof assemblies and individual beams in buildings shall be considered restrained when the surrounding or supporting structure is capable of resisting the thermal expansion throughout the range of anticipated elevated temperatures. Construction not complying . . . is assumed to be free to rotate and expand and shall be considered as unrestrained.
"Restraint may be provided by the lateral stiffness of supports for floor and roof assemblies and intermediate beams forming part of the assembly. In order to develop restraint, connections must adequately transfer thermal thrusts to such supports. The rigidity of adjoining panels or structures shall be considered in assessing the capability of a structure to resist thermal expansion."
Because it is difficult to determine whether an existing building's structural system is capable of providing the required restraint, the lower hourly ratings of a similar but unrestrained assembly have been recommended.
6. Hourly rating based upon Table O.4.5.54, Item B-12-RC-2.

Table O.4.5.56 Reinforced Concrete Beams — Unprotected Depth 10" (250 mm) to Less Than 12" (300 mm)

Item Code	Depth	Construction Details	Performance		Reference Number			Notes	Rec Hours
			Load	Time	Pre-BMS-92	BMS-92	Post-BMS-92		
B-SU-1	10"	10" × $4^1/_2$" × 25 lb "I" beam	10 tons	39 min			7	1	$^1/_3$

Notes:
1. Concentrated at mid-span.

Copyright National Fire Protection Association
Provided by IHS under license with NFPA
No reproduction or networking permitted without license from IHS
Not for Resale

Table O.4.5.57 Steel Beams — Concrete Protection Depth 10" (250 mm) to Less Than 12" (300 mm)

Item Code	Depth	Construction Details	Performance		Reference Number			Notes	Rec Hours
			Load	Time	Pre-BMS-92	BMS-92	Post-BMS-92		
B-SC-1	10"	10" × 8" rectangle; aggregate concrete (4170 psi) with 1" cover top and 2" cover bottom; No. 13 SWG iron wire loosely wrapped at approximately 6" pitch about 7" × 4" × 16 lb I beam	3.9 tons	3 hr 46 min			7	1,2,3	$3^3/_4$
B-SC-2	10"	10" × 8" rectangle; aggregate concrete (3630 psi) with 1" cover top and 2" cover bottom; No. 13 SWG iron wire loosely wrapped at approx. 6" pitch about 7" × 4" × 16 lb I beam	5.5 tons	5 hr 26 min			7	1,4,5,6,7	$3^3/_4$

Notes:
1. Load concentrated at mid-span.
2. Specimen 10'3" clear span simply supported.
3. Passed Grade "C" fire resistance (British) including hose stream and reload.
4. Specimen 11' clear span — restrained.
5. Passed Grade "B" fire resistance (British) including hose stream and reload.
6. See Table O.4.5.55, note 5.
7. Hourly rating based upon B-SC-1 above.

FIGURE O.4.5.58 Resistance of Doors to Fire Exposure.

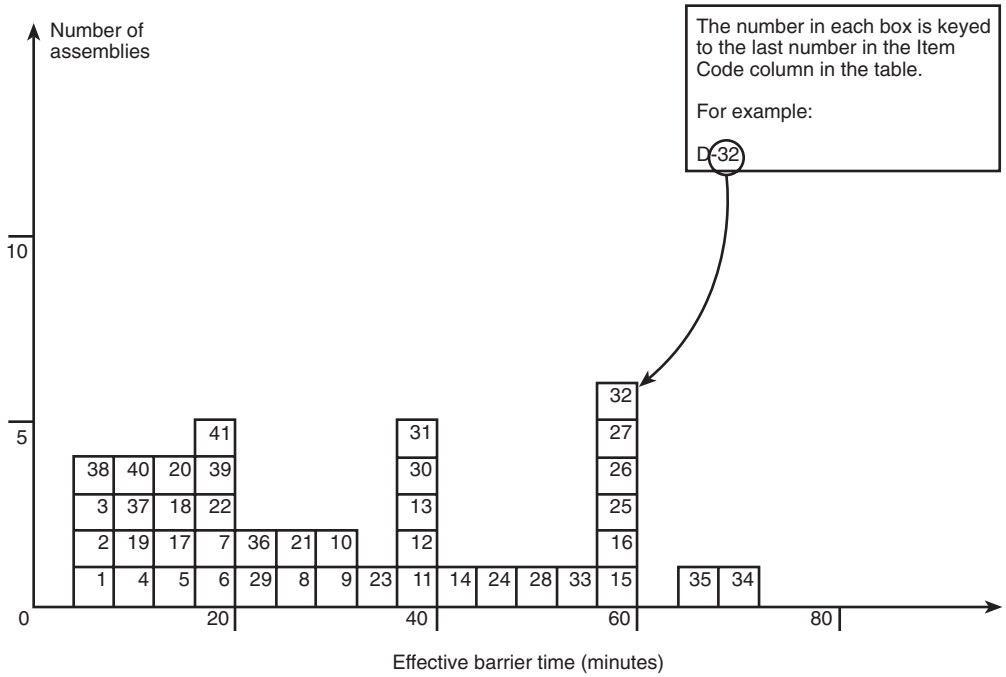

Copyright National Fire Protection Association
Provided by IHS under license with NFPA
No reproduction or networking permitted without license from IHS
Not for Resale

Table O.4.5.58 Resistance of Doors to Fire Exposure

Item Code	Door Minimum Thickness	Construction Details	Performance		Reference Number			Notes	Rec (Min.)
			Effective Barriers	Edge Flaming	Pre-BMS-92	BMS-92	Post-BMS-92		
D-1	3/8"	Panel door, pine perimeter (1 3/8"); painted (enamel)	5 min 10 sec	n/a			90	1,2	5
D-2	3/8"	As above, with 2 coats U.L. listed intumescent coating	5 min 30 sec	5 min			90	1,2,7	5
D-3	3/8"	As D-1 with standard primer and flat interior paint	5 min 55 sec	n/a			90	1,3,4	5
D-4	2 5/8"	As D-1 with panels covered each side with 1/2" plywood, edge grouted with sawdust filled plaster; door faced with 1/8" hardboard each side; paint see (5)	11 min 15 sec	3 min 45 sec			90	1,2,5,7	10
D-5	3/8"	As D-1 but surface protected with glass fiber reinforced intumescent fire retardant coating	16 min	n/a			90	1,3,4,7	15
D-6	1 5/8"	Door detail as D-4 but with 1/8" cement asbestos board facings with aluminum foil; door edges protected by sheet metal	17 min	10 min 5 sec			90	1,3,4	15
D-7	1 5/8"	Door detail with 1/8" hardboard cover each side as facings; glass fiber reinforced intumescent coating applied	20 min	n/a			90	1,3,4,7	20
D-8	1 5/8"	Door detail as D-4; panel was glass reinforced epoxy intumescent	26 min	24 min 45 sec			90	1,3,4,6,7	25
D-9	1 5/8"	Door detail as D-4 with facings of 5/8" cement asbestos board	29 min	3 min 15 sec			90	1,2	5
D-10	1 5/8"	As per D-9	31 min 30 sec	7 min 20 sec			90	1,3,4	6
D-11	1 5/8"	As per D-7 painted with epoxy intumescent coating including glass fiber roving	36 min 25 sec	n/a			90	1,3,4	35
D-12	1 5/8"	As per D-4 with intumescent fire retardant paint	37 min 30 sec	24 min 40 sec			90	1,3,4	30
D-13	1 1/2" (nom)	As per D-4 but with 24 ga. galv. sheet metal facings	39 min	39 min			90	1,3,4	39
D-14	1 5/8"	As per D-9	41 min 30 sec	17 min 20 sec			90	1,3,4,6	20
D-15		Class C steel fire door	60 min	58 min			90	7,8	60
D-16		Class B steel fire door	60 min	57 min			90	7,8	60
D-17	1 3/4"	Solid core flush door; core staves laminated to facings but not each other; birch plywood facings 1/2" rebate in door frame for door; 3/32" clearance between door and wood frame	15 min	13 min			37	11	13
D-18	1 3/4"	As per D-17	14 min	13 min			37	11	13
D-19	1 3/4"	Door as per D-17 but with 16 ga. steel; 3/32" door frame clearance	12 min				37	9,11	10
D-20	1 3/4"	As per D-19	16 min				37	10,11	10

(Sheet 1 of 2)

--`,,```,,,,````-`-`,,`,,`,`,,`---

Copyright National Fire Protection Association
Provided by IHS under license with NFPA
No reproduction or networking permitted without license from IHS
Not for Resale

Table O.4.5.58 Resistance of Doors to Fire Exposure ***(Continued)***

Item Code	Door Minimum Thickness	Construction Details	Performance		Reference Number			Notes	Rec (Min.)
			Effective Barriers	Edge Flaming	Pre-BMS-92	BMS-92	Post-BMS-92		
D-21	$1^3/_4$"	Door as per D-17 intumescent paint applied to top and side edges	26 min				37	11	25
D-22	$1^3/_4$"	Door as per D-17 but with $^1/_2$" × $^1/_8$" steel strip set into edges of door at top and side facing stops; matching strip on stop	18 min	6 min			37	11	18
D-23	$1^3/_4$"	Solid oak door	36 min	22 min			15	13	25
D-24	$1^7/_8$"	Solid oak door	45 min	35 min			15	13	35
D-25	$1^7/_8$"	Solid teak door	58 min	34 min			15	13	35
D-26	$1^7/_8$"	Solid (pitch) pine door	57 min	36 min			15	13	35
D-27	$1^7/_8$"	Solid deal (pine) door	57 min	30 min			15	13	30
D-28	$1^7/_8$"	Solid mahogany door	49 min	40 min			15	13	45
D-29	$1^7/_8$"	Solid poplar door	24 min	3 min			15	13,14	5
D-30	$1^7/_8$"	Solid oak door	40 min	33 min			15	13	35
D-31	$1^7/_8$"	Solid walnut door	40 min	15 min			15	13	20
D-32	$2^5/_8$"	Solid Quebec pine door	60 min	60 min			15	13	60
D-33	$2^5/_8$"	Solid pine door	55 min	39 min			15	13	40
D-34	$2^5/_8$"	Solid oak door	69 min	60 min			15	13	60
D-35	$2^5/_8$"	Solid teak door	65 min	17 min			15	13	60
D-36	$1^1/_2$"	Solid softwood door	23 min	$8^1/_2$ min			15	13	10
D-37	$^3/_4$"	Panel door	8 min	$7^1/_2$ min			15	13	5
D-38	$^5/_{16}$"	Panel door	5 min	5 min			15	13	5
D-39	$^3/_4$"	Panel door — fire retardant treated	$17^1/_2$ min	13 min			15	13	8
D-40	$^3/_4$"	Panel door — fire retardant treated	$8^1/_2$ min	$8^1/_2$ min			15	13	8
D-41	$^3/_4$"	Panel door — fire retardant treated	$16^3/_4$ min	$11^1/_2$ min			15	13	8

(Sheet 2 of 2)

Notes:
1. All door frames were of standard lumber construction.
2. Wood door stop protected by asbestos millboard.
3. Wood door stop protected by sheet metal.
4. Door frame protected with sheet metal and weather strip.
5. Surface painted with intumescent coating.
6. Door edge sheet metal protected.
7. Door edge intumescent paint protected.
8. Formal steel frame and door stop.
9. Door opened into furnace at 12'.
10. Similar door opened into furnace at 12'.
11. The doors reported in these tests represent the type contemporaries used as 20-minute solid core wood doors. The test results demonstrate the necessity of having wall anchored metal frames, minimum cleaners possible between door, frame, and stops. They also indicate the utility of long throw latches and the possible use of intumescent paints to seal doors to frames in event of a fire.
12. Minimum working clearance and good latch closure are absolute necessities for effective containment for all such working door assemblies.
13. Based on British tests.
14. Failure at door–frame interface.

Copyright National Fire Protection Association
Provided by IHS under license with NFPA
No reproduction or networking permitted without license from IHS
Not for Resale

Endnotes.

[1]For information on other fire-related aspects of older buildings, see the *Preservation Briefs and Preservation Tech Notes* series published by the Preservation Assistance Division, National Park Service, U.S. Department of Interior. These publications are available online at www2.cr.nps.gov/tps.

[2]Other accepted standard test methods for assessing fire growth characteristics related to flame spread of finish materials include room fire test. These may be useful for conducting evaluations of finish materials under the alternative materials and methods provisions of adopted codes in lieu of providing tunnel test data. Such test methods are typified by ASTM E 603, *Standard Guide for Room Fire Experiments*, as well as NFPA 265 and UBC Standard 8–2, both of which provide a "Test Method for Evaluating Room Fire Growth Contribution of Textile Wall Covering."

[3]The "thermal" fire endurance is the time at which the average temperature on the unexposed side of a construction exceeds its initial value by 250°F when the other side is exposed to the "standard" fire specified by ASTM Test Method E 119.

[4]Reproduced from the May 1965 *Fire Technology* (vol. 1, no. 2). Copyright National Fire Protection Association, Boston (Quincy). Reproduced by Permission.

[5]Cover: the protective layer or membrane of material that slows the flow of heat to the structural elements.

O.5 Bibliography Abrams, M. S. and Gustaferro, A. H., "Fire Tests of PokeThru Assemblies," *Research and Development Bulletin,* 1481-1, Portland Cement Association, Skokie, IL, 1971.

American Institute of Steel Construction, *Fire Resistant Construction in Modern Steel-Framed Buildings,* New York, NY, 1959.

American School of Correspondence, *Cyclopedia of Fire Prevention and Insurance; a General Reference Work on Fire and Fire Losses*, Fireproof Construction, Building Inspection. Prepared by architects, engineers, underwriters, and practical insurance men. Chicago, IL, 1912.

American Society for Testing Materials, *Standard Specifications for Fire Tests of Materials and Construction* (C19-18), Philadelphia, PA, 1918.

Architectural Record, "Sweet's Indexed Catalogue of Building Construction for the Year 1906," New York, NY, 1906.

Ashton, L. A. and Smart, P.M.T., "Sponsored Fire-Resistance Tests on Structural Elements," Dept. of Scientific and Industrial Research and Fire Offices' Committee, London, 1960.

Associated Factory Mutual Fire Insurance Companies, The National Board of Fire Underwriters, and the Bureau of Standards, *Fire Tests of Building Columns; an Experimental Investigation of the Resistance of Columns, Loaded and Exposed to Fire or to Fire and Water, with Record of Characteristic Effects,* Jointly Conducted at Underwriters Laboratories, Chicago, IL, 1917–19.

Babrauskas, Vytenis, "Fire Endurance in Buildings," PhD Thesis, *Fire Research Group,* Report No. UCB FRG 76-16, University of California, Berkeley, CA, November 1976.

Babrauskas, V. and Williamson, R. B., "The Historical Basis of Fire Resistance Testing, Part I and Part II," *Fire Technology,* Vol. 14, Nos. 3 and 4, August and November 1978, pp. 184–194, 205, 304–316.

Bauschinger, J., "Mittheilungern de Mech.-Tech. Lab. der K. Tech. Hochschule, Munchen," Vol. 12, 1885.

Bevan, R. C. and Webster, C. T., "Investigations on Building Fires, Part III: Radiation from Building Fires," *National Building Studies,* Technical Paper, No. 5, Dept. of Scientific and Industrial Research (Building Research Station), London, 1950.

Bird, E. L. and Docking, S. J., *Fire in Buildings,* A. & C. Black, London, 1949.

Bird, G. I., "Protection of Structural Steel Against Fire," Fire Note, No. 2, Dept. of Scientific and Industrial Research and Fire Offices' Committee, Joint Fire Research Organization, HMSO, London, 1961.

Bond, H., ed., "Research on Fire; a Description of the Facilities, Personnel and Management of Agencies Engaged in Research on Fire," a *Staff Report,* National Fire Protection Association, Boston, MA, 1957.

British Fire Prevention Committee, "Fire Tests with Floors by the Expended Metal Company," *Red Book,* No. 14, London, 1899.

British Fire Prevention Committee, "First International Fire Prevention Congress," Official Congress Report, London, 1903.

British Standards Institution, "Fire Tests on Building Materials and Structures," British Standards, 476, Pt. 1, London, 1953.

Brown, C. R., "Fire Tests of Treated and Untreated Wood Partitions," Research Paper, RP 1076, part of *Journal of Research of the National Bureau of Standards,* Vol. 20, Washington, DC, February 1938, pp. 217–237.

Building Research Station, "Fire: Materials and Structures," *Digest,* No. 106, HMSO, London, 1958.

Building Research Establishment, "Timber Fire Doors," *Digest,* 220, Borehamwood, England, November 1978.

Bullen, M. L., "A Note on the Relationship Between Scale Fire Experiments and Standard Test Results," Building Research Establishment Note, N51/75, Borehamwood, England, May 1975.

Butcher, E. G., Chitty, T. B., and Ashton, L. A., "The Temperature Attained by Steel in Building Fires," *Fire Research Technical Paper,* No. 15, Ministry of Technology and Fire Offices' Committee, Joint Fire Research Organization, HMSO, London, 1966.

California State Historical Building Code, Draft, 1978.

Central Dockyard Laboratory, "Fire Retardant Paint Tests — a Critical Review," *CDL Technical Memorandum,* No. P87/73, H. M. Naval Base, Portsmouth, NH, December 1973.

Central Housing Committee on Research, Design, and Construction, Subcommittee on Definition, "A Glossary of Housing Terms," *Building Materials and Structures,* Report BMS 91, National Bureau of Standards, Washington, DC, September 1942.

Central Housing Committee on Research, Design, and Construction Subcommittee on Fire Resistance Classifications, "Fire-Resistance Classifications of Building Constructions," *Building Materials and Structures,* Report BMS 92, National Bureau of Standards, Washington, DC, 1942. (Available from NTIS No. COM-73-10974)

Central Housing Committee on Research, Design, and Construction, Subcommittee on Building Codes, "Recommended Building Code Requirements for New Dwelling Construction with Special Reference to War Housing; Report," *Building Materials and Structures,* Report BMS 88, National Bureau of Standards, Washington, DC, September 1942.

Clinton Wire Cloth Company, "Some Test Data on Fireproof Floor Construction Relating to Cinder Concrete, Terra Cotta and Gypsum," Clinton, GA, 1913.

Concrete Construction, "Repair of Fire Damage," 3 parts, March–May, 1972.

Concrete Construction, "The Fire Endurance of Concrete; a Special Issue," Vol. 18, No. 8, August 1974, pp. 345–440.

Crosby, E. U. and Fiske, H. A., *Handbook of Fire Protection,* 5th ed., The Insurance Field Company, Louisville, KY, 1914.

Copyright National Fire Protection Association
Provided by IHS under license with NFPA
No reproduction or networking permitted without license from IHS
Not for Resale

Crosby, E. U., Fiske, H. A., and Forster, H. W., *Handbook of Fire Protection,* 8th ed., National Fire Protection Association, Boston, MA, 1936.

Crosby, E. U., Fiske, H. A., and Forster, H. W., *Handbook of Fire Protection,* 7th ed., D. Van Nostrand Co., New York, NY, 1924.

Davey, N. and Ashton, L. A., "Investigations on Building Fires, Part V: Fire Tests of Structural Elements," *National Building Studies,* Research Paper, No. 12, Dept. of Scientific and Industrial Research (Building Research Station), London, 1953.

De Coppet Bergh, D., *Safe Building Construction; a Treatise Giving in Simplest Forms Possible Practical and Theoretical Rules and Formulae Used in Construction of Buildings and General Instruction,* new ed., thoroughly rev., Macmillan Co., New York, NY, 1908.

Department of Commerce, Building Code Committee, "Recommended Minimum Requirements for Fire Resistance in Buildings," *Building and Housing,* No. 14, National Bureau of Standards, Washington, DC, 1931.

Department of Scientific and Industrial Research and of the Fire Offices' Committee, Joint Committee of the Building Research Board, "Fire Gradings of Buildings, Part I: General Principles and Structural Precautions," *Post-War Building Studies,* No. 20, Ministry of Works, London, 1946.

Department of Scientific and Industrial Research and of the Fire Offices' Committee, Joint Committee of the Building Research Board, "Fire Gradings of Buildings. Part IV: Chimneys and Flues," *Post-War Building Studies,* No. 29, HMSO, London, 1952.

Department of the Environment and Fire Offices' Committee, Joint Fire Research Organization, "Fire-Resistance Requirements for Buildings — a New Approach; Proceedings of the Symposium Held at the Connaught Rooms, London, 28 September 1971," *Symposium,* No. 5, HMSO, London, 1973.

Dietz, A. G. H., *Dwelling House Construction,* The MIT Press, Cambridge, MA, 1971.

Dunlap, M. E. and Cartwright, F. P., "Standard Fire Tests for Combustible Building Materials," *Proceedings of the American Society for Testing Materials,* Vol. 27, Philadelphia, PA, 1927, pp. 534–546.

Egan, M. D., *Concepts in Building Firesafety,* J. Wiley, New York, 1978.

Engineering News, Vol. 36, August 6, 1896, pp. 92–94.

Engineering News, Vol. 46, December 26, 1901, pp. 482–486, 489–490.

Engineering News, Vol. 56, August 9, 1906, pp. 135–140.

Engineering Record, Vol. 35, January 2, 1897, pp. 93–94; May 29, 1897, pp. 558–560; Vol. 36, September 18, 1897, pp. 337–340; September 25, 1897, pp. 359–363; October 2, 1897, pp. 382–387; October 9, 1897, pp. 402–405.

Ferris, J. E., "Fire Hazards of Combustible Wallboards," *Commonwealth Experimental Building Station Special Report,* No. 18, Sydney, October 1955.

Fisher, F. L., et al., "A Study of Potential Flashover Fires in Wheeler Hall and the Results from a Full Scale Fire Test of a Modified Wheeler Hall Door Assembly," *Fire Research Laboratory Report,* UCX 77-3; UCX-2480, University of California, CA, Dept. of Civil Engineering, Berkeley, CA, 1977.

Fisher, R. W. and Smart, P. M. T., "Results of Fire Resistance Tests on Elements of Building Construction," Building Research Establishment Report, G R6, HMSO, London, 1975.

Forest Products Laboratory, "Charring Rate of Selected Woods — Transverse to Grain," Forest Service Research Paper, FLP 69, Madison, WI, April 1967.

Forest Products Laboratory, "Fire Resistance Tests of Plywood-Covered Wall Panels," Information reviewed and reaffirmed, *Forest Service Report,* No. 1257, Madison, WI, April 1961.

Forest Products Laboratory, "Fire Resistance of Wood Construction," Excerpt from "Wood Handbook — Basic Information on Wood as a Material of Construction with Data for its Use in Design and Specification," *Dept. of Agriculture Handbook,* No. 72, Washington, DC, 1955, pp. 337–350.

Foster, H. D., Pinkston, E. R., and Ingberg, S. H., "Fire Resistance of Structural Clay Tile Partitions," *Building Materials and Structures,* Report BMS 113, National Bureau of Standards, Washington, DC, October 1948.

Foster, H. D., Pinkston, E. R., and Ingberg, S. H., "Fire Resistance of Walls of Gravel-Aggregate Concrete Masonry Units," *Building Materials and Structures,* Report BMS 120, National Bureau of Standards, Washington, DC, March 1951.

Foster, H. D., Pinkston, E. R., and Ingberg, S. H., "Fire Resistance of Walls of Lightweight-Aggregate Concrete Masonry Units," *Building Materials and Structures,* Report BMS 117, National Bureau of Standards, Washington, DC, May 1950.

Freitag, J. K., *Architectural Engineering; with Especial Reference to High Building Construction, Including Many Examples of Prominent Office Buildings,* 2nd ed., rewritten, J. Wiley, New York, NY, 1906.

Freitag, J. K., *Fire Prevention and Fire Protection as Applied to Building Construction; a Handbook of Theory and Practice,* 2nd ed., J. Wiley, New York, NY, 1921.

Freitag, J. K., *The Fireproofing of Steel Buildings,* 1st ed., J. Wiley, New York, NY, 1906.

Gage Babcock & Associate, "The Performance of Fire-Protective Materials under Varying Conditions of Fire Severity," Report 6924, Chicago, IL, 1969.

Galbreath, M., "Fire Tests of Wood Door Assemblies," Fire Study, No. 36, Div. of Building Research, National Research Council Canada, Ottawa, May 1975.

Goalwin, D. S., "Fire Resistance of Concrete Floors," *Building Materials and Structures,* Report BMS 134, National Bureau of Standards, Washington, DC, December 1952.

Goalwin, D. S., "Properties of Cavity Walls," *Building Materials and Structures,* Report BMS 136, National Bureau of Standards, Washington, DC, May 1953.

Gottschalk, F. W., "Some Factors in the Interpretation of Small-Scale Tests for Fire-Retardant Wood," *Bulletin of the American Society for Testing and Materials,* October 1945, pp. 40–43.

Gross, D., "Field Burnout Tests of Apartment Dwellings Units," *Building Science Series,* 10, National Bureau of Standards, Washington, DC, 1967.

Gustaferro, A. H. and Martin, L. D., *Design for Fire Resistance of Pre-cast Concrete,* prep. for the Prestressed Concrete Institute Fire Committee, 1st ed., PCI, Chicago, IL, 1977.

Hall, G. S., "Fire Resistance Tests of Laminated Timber Beams," *Timber Association Research Report,* WR/RR/1, High Sycombe, July 1968.

Hamilton, S. B., "A Short History of the Structural Fire Protection of Buildings Particularly in England," *National Building Studies,* Special Report, No. 27, Dept. of Scientific and Industrial Research (Building Research Station), London, 1958.

Harmathy, T. Z., "Ten Rules of Fire Endurance Rating," *Fire Technology,* Vol. 1, May 1965, pp. 93–102.

Heselden, A. J. M., Smith, P.G., and Theobald, C. R., "Fires in a Large Compartment Containing Structural Steelwork; Detailed Measurements of Fire Behavior," *Fire Research Note,* No. 646, Fire Research Station, Borehamwood, England, December 1966.

Copyright National Fire Protection Association
Provided by IHS under license with NFPA
No reproduction or networking permitted without license from IHS
Not for Resale

Hird, D. and Fischl, C. F., "Fire Hazard of Internal Linings," *National Building Studies,* Special Report, No. 22, Dept. of Scientific and Industrial Research and Fire Offices' Committee (Joint Fire Research Organization), London, 1954.

Hold, H. G., *Fire Protection in Buildings,* Crosby, Lockwood, London, 1913.

Hull, W. A. and Ingberg, S. H., "Fire Resistance of Concrete Columns," Technologic Papers of the Bureau of Standards, No. 272, Vol. 18, Washington, DC, 1925, pp. 635–708.

Humphrey, R. L., "The Fire-Resistive Properties of Various Building Materials," *Geological Survey Bulletin,* 370, Washington, DC, 1909.

Ingberg, S. H. and Mitchell, N. D., "Fire Tests of Wood and Metal-Framed Partition," *Building Materials and Structures,* Report BMS 71, National Bureau of Standards, Washington, DC, 1941.

Ingberg, S. H., "Fire Tests of Brick Walls," *Building Materials and Structures,* Report BMS 143, National Bureau of Standards, Washington, DC, November 1954.

Ingberg, S. H., "Influence of Mineral Composition of Aggregates on Fire Resistance of Concrete," *Proceedings of the American Society for Testing and Materials,* Vol. 29, Philadelphia, PA, 1929, pp. 824–829.

Ingberg, S. H. "Tests of Severity of Building Fires," *NFPA Quarterly,* Vol. 22, No. 1, July 1928, pp. 43–61.

Ingberg, S. H., "The Fire Resistive Properties of Gypsum," *Proceedings of the American Society for Testing and Materials,* Vol. 23, Philadelphia, PA, 1923, pp. 254–256.

Ingberg, S. H., "The Fire Resistance of Gypsum Partitions," *Proceedings of the American Society for Testing and Materials,* Vol. 25, Philadelphia, PA, 1925, pp. 299–314.

International Conference of Building Officials, *Uniform Building Code* (1979 ed.), Whittier, CA, 1979.

International Organization for Standardization, *Fire Resistance Tests on Elements of Building Construction* (R834), London, 1968.

Kidder, F. E., "Architects' and Builders' Handbook: Data for Architects, Structural Engineers, Contractors, and Draughtsmen," comp. by a staff of specialists and H. Parker, editor-in-chief, 18th ed., enl., J. Wiley, New York, NY, 1936.

Kidder, F. E., *Building Construction and Superintendence,* rev. and enl., by T. Nolan, W. T. Comstock, New York, NY, 1909–1913, 2 vols.

Kingberg, S. H. and Foster, H. D., "Fire Resistance of Hollow Load-Bearing Wall Tile," National Bureau of Standards Research Paper, No. 37, (Reprint from NBS Journal of Research, Vol. 2) Washington, DC, 1929.

Kollbrunner, C. F., "Steel Buildings and Fire Protection in Europe," *Journal of the Structural Division,* ASCE, Vol. 85, No. ST9, Proc. Paper 2264, November 1959, pp. 125–149.

Langdon Thomas, G. J., "Roofs and Fire," *Fire Note,* No. 3, Dept. of Scientific and Industrial Research and Fire Offices' Committee, Joint Fire Research Organization, HMSO, London, 1963.

Lawson, D. I., Fox, L. L., and Webster, C. T., "The Heating of Panels by Flue Pipes," *Fire Research,* Special Report, No. 1, Dept. of Scientific and Industrial Research and Fire Offices' Committee, London, HMSO, 1952.

Lawson, D. I., Webster, C. T., and Ashton, L. A., "Fire Endurance of Timber Beams and Floors," *National Building Studies,* Bulletin, No. 13, Dept. of Scientific and Industrial Research and Fire Offices' Committee (Joint Fire Research Organization), London, 1951.

Lunberg-Holm, K., "Glass," *The Architectural Record,* October 1930, pp. 345–357.

Malhotra, H. L., "Effect of Age on the Fire Resistance of Reinforced Concrete Columns," *Fire Research Memorandum,* No. 1, Fire Research Station, Borehamwood, England, April 1970.

Malhotra, H. L., "Fire Resistance of Brick and Block Walls," Fire Note, No. 6, Ministry of Technology and Fire Offices' Committee, Joint Fire Research Organization, HMSO, London, 1966.

Malhotra, H. L., "Fire Resistance of Structural Concrete Beams," Fire Research Note, No. 741, Fire Research Station, Borehamwood, England, May 1969.

Malhotra, H. L. and Morris, W. A., "Tests on Roof Construction Subjected to External Fire," Fire Note, No. 4, Dept. of Scientific and Industrial Research and Fire Offices' Committee, Joint Fire Research Organization, HMSO, London, 1963.

Markwardt, L. J., Bruce, H. D., and Freas, A. D., "Brief Description of Some Fire-Test Methods Used for Wood and Wood-Base Materials," *Forest Service Report,* No. 1976, Forest Products Laboratory, Madison, WI, 1976.

Massachusetts State Building Code; Recommended Provisions, "Article 22: Repairs, Alterations, Additions, and Change of Use of Existing Buildings," Boston, MA, October 23, 1978.

Menzel, C. A., "Tests of the Fire Resistance and Stability of Walls of Concrete Masonry Units," *Proceedings of the American Society for Testing Materials,* Vol. 31, Philadelphia, PA, 1931, pp. 607–660.

Menzel, C. A., *Tests of the Fire-Resistance and Strength of Walls, Concrete Masonry Units,* Portland Cement Association, Chicago, IL, 1934.

Ministry of Technology and Fire Offices' Committee, Joint Fire Research Organization, "Behavior of Structural Steel in Fire; Proceedings of the Symposium Held at the Fire Research Station Borehamwood, Herts on 24th January, 1967," *Symposium,* No. 2, HMSO, London, 1968.

Ministry of Technology and Fire Offices' Committee, Joint Fire Research Organization, "Fire and Structural Use of Timber in Buildings; Proceedings of the Symposium Held at the Fire Research Station, Borehamwood, Herts on 25th October, 1967," *Symposium,* No. 3, HMSO, London, 1970.

Mitchell, N. D., Bender, E. D., and Ryan, J. V., "Fire Resistance of Shutters for Moving-Stairway Openings," *Building Materials and Structures,* Report BMS 129, National Bureau of Standards, Washington, DC, March 1952.

Mitchell, N. D. and Ryan, J. V., "Fire Tests of Steel Columns Encased with Gypsum Lath and Plaster," *Building Materials and Structures,* Report BMS 135, National Bureau of Standards, Washington, DC, April 1953.

Mitchell, N. D., "Fire Hazard Tests with Masonry Chimneys," NFPA Publication, No. Q-43-7, Boston, MA, October 1949.

Mitchell, N. D., "Fire Tests of Gunite Slabs and Partitions," *Building Materials and Structures,* Report BMS 131, National Bureau of Standards, Washington, DC, May 1952.

Mitchell, N. D., "Fire Tests of Steel Columns Protected with Siliceous Aggregate Concrete," *Building Materials and Structures,* Report BMS 124, National Bureau of Standards, Washington, DC, May 1951.

Mitchell, N. D., "Fire Tests of Wood-Framed Walls and Partitions with Asbestos-Cement Facings," *Building Materials and Structures,* Report BMS 123, National Bureau of Standards, Washington, DC, May 1951.

Copyright National Fire Protection Association
Provided by IHS under license with NFPA
No reproduction or networking permitted without license from IHS
Not for Resale

Moran, T. H., "Comparative Fire Resistance Ratings of Douglas Fir Plywood," *Douglas Fir Plywood Association Laboratory Bulletin,* 57-A, Tacoma, WA, 1957.

Morris, W. A., "An Investigation into the Fire Resistance of Timber Doors," Fire Research Note, No. 855, Fire Research Station, Borehamwood, England, January 1971.

National Board of Fire Underwriters, "Fire Resistance Ratings of Beam, Girder, and Truss Protections, Ceiling Constructions, Column Protections, Floor and Ceiling Constructions, Roof Constructions, Walls and Partitions," New York, NY, April 1959.

National Board of Fire Underwriters, "Fire Resistance Ratings of Less than One Hour," New York, NY, August 1956.

National Board of Fire Underwriters, "National Building Code; an Ordinance Providing for Fire Limits, and Regulations Governing the Construction, Alteration, Equipment, or Removal of Buildings or Structures," New York, NY, 1949.

National Bureau of Standards, "Fire Resistance and Sound-Insulation Ratings for Walls, Partitions, and Floors," Technical Report on Building Materials, 44, Washington, DC, 1952.

National Fire Protection Association, Committee on Fire-Resistive Construction, *The Baltimore Conflagration,* 2nd ed., Chicago, IL, 1904.

National Fire Protection Association, *National Fire Codes; a Compilation of NFPA Codes, Standards, Recommended Practices and Manuals,* 12 vols., Quincy, MA, 1997.

National Fire Protection Association and the National Board of Fire Underwriters, Report on the Fire at the Edison Phonograph Works, Thomas A. Edison, Inc., West Orange, NJ, December 9, 1914, Boston, MA, 1915.

National Lumber Manufacturers Association, "Comparative Fire Test of Timber and Steel Beams," *Technical Report,* No. 3, Washington, DC, 1963.

National Lumber Manufacturers Association, "Comparative Fire Test on Wood and Steel Joists," *Technical Report,* No. 1, Washington, DC, 1961.

National Research Council of Canada. Associate Committee on the National Building Code, "Fire Performance Ratings," Supplement No. 2 to the National Building Code of Canada, Ottawa, 1965.

Parker, H., Gay, C. M., and MacGuire, J. W., *Materials and Methods of Architectural Construction,* 3rd ed., J. Wiley, New York, NY, 1958.

Parker, T. W., Nurse, R. W., and Bessey, G. E., "Investigations on Building Fires. Part I: The Estimation of the Maximum Temperature Attained in Building Fires from Examination of the Debris, and Part II: The Visible Change in Concrete or Mortar Exposed to High Temperatures," *National Building Studies,* Technical Paper, No. 4, Dept. of Scientific and Industrial Research (Building Research Station), London, 1950.

Parson, H., "The Tall Building under Test of Fire," *Red Book,* No. 17, British Fire Prevention Committee, London, 1899.

Przetak, L., *Standard Details for Fire-Resistive Building Construction,* McGraw-Hill Book Co., New York, NY, 1977.

Ramsey, C. G. and Sleeper, H. R., *Architectural Graphic Standards for Architects, Engineers, Decorators, Builders, and Draftsmen,* 3rd ed., J. Wiley, New York, NY, 1941.

Robinson, H. E., Cosgrove, L. A., and Powell, F. J., "Thermal Resistance of Airspace and Fibrous Insulations Bounded by Reflective Surfaces," *Building Materials and Structures,* Report BMS 151, National Bureau of Standards, Washington, DC, November 1957.

Robinson, W. C., *The Parker Building Fire,* Underwriters' Laboratories, Chicago, IL, c. 1908.

Ryan, J. V. and Bender, E. W., "Fire Endurance of Open-Web Steel-Joist Floors with Concrete Slabs and Gypsum Ceilings," *Building Materials and Structures,* Report BMS 141, National Bureau of Standards, Washington, DC, August 1954.

Ryan, J. V. and Bender, E. W., "Fire Tests of Precast Cellular Concrete Floors and Roofs," National Bureau of Standards Monograph, 45, Washington, DC, April 1962.

Sachs, E. O., "Fire Tests with Unprotected Columns," *Red Book,* No. 11, British Fire Prevention Committee, London, 1899.

Sachs, E. O., "The British Fire Prevention Committee Testing Station," *Red Book,* No. 13, British Fire Prevention Committee, London, 1899.

Sachs, E. O. and Marsland, E., "The Fire Resistance of Doors and Shutters being Tabulated Results of Fire Tests Conducted by the Committee," *Journal of the British Fire Prevention Committee,* No. VII, London, 1912.

Sachs, E. O. and Marsland, E., "The Fire Resistance of Floors being Tabulated Results of Fire Tests Conducted by the Committee," *Journal of the British Fire Prevention Committee,* No. VI, London, 1911.

Sachs, E. O. and Marsland, E., "The Fire Resistance of Partitions being Tabulated Results of Fire Tests Conducted by the Committee," *Journal of the British Fire Prevention Committee,* No. IX, London, 1914.

Serex, E. R., "Fire Resistance of Alta Bates Gypsum Block Non-Load Bearing Wall," *Report to Alta Bates Community Hospital,* Structural Research Laboratory Report, ES-7000, University of California, Berkeley, CA, 1969.

Setchkin, N. P. and Ingberg, S. H., "Test Criterion for an Incombustible Material," *Proceedings of the American Society for Testing Materials,* Vol. 45, Philadelphia, PA, 1945, pp. 866–877.

Shoub, H. and Gross, D., "Doors as Barriers to Fire and Smoke," *Building Science Series,* 3, National Bureau of Standards, Washington, DC, 1966.

Shoub, H. and Ingberg, S. H., "Fire Resistance of Steel Deck Floor Assemblies," *Building Science Series,* 11, National Bureau of Standards, Washington, DC, December 1967.

Smith, P., "Investigation and Repair of Damage to Concrete Caused by Formwork and Falsework Fire," *Journal of the American Concrete Institute,* Vol. 60, Title no. 60–66, November 1963, pp. 1535–1566.

Son, B. C., "Fire Endurance Test on a Steel Tubular Column Protected with Gypsum Board," National Bureau of Standards, NBSIR, 73-165, Washington, DC, 1973.

Spiegelhalter, F., "Guide to Design of Cavity Barriers and Fire Stops," *Current Paper,* CP 7/77, Building Research Establishment, Borehamwood, England, February 1977.

Steiner, A. J., "Method of Fire-Hazard Classification of Building Materials," *Bulletin of the American Society for Testing and Materials,* March 1943, Philadelphia, PA, 1943, pp. 19–22.

Steingiser, S., "A Philosophy of Fire Testing," *Journal of Fire & Flammability,* Vol. 3, July 1972, pp. 238–253.

Structural Clay Products Institute, "Estimating the Fire Resistance of Clay Masonry Walls — II," *Technical Notes on Brick and Tile Construction,* Vol. 4, No. 1, San Francisco, CA, January 1953.

Structural Clay Products Institute, "Fire Resistance Ratings of Clay Masonry Walls — I," *Technical Notes on Brick and Tile Construction,* Vol. 3, No. 12, San Francisco, CA, December 1952.

Structural Clay Products Institute, "Structural Clay Tile Fireproofing," *Technical Notes on Brick and Tile Construction,* Vol. 1, No. 11, San Francisco, CA, November 1950.

Copyright National Fire Protection Association
Provided by IHS under license with NFPA
No reproduction or networking permitted without license from IHS
Not for Resale

Structural Engineers Association of Southern California, Fire Ratings Subcommittee, "Fire Ratings, a Report," part of *Annual Report,* Los Angeles, CA, 1962, pp. 30–38.

The American Architect and Building News, Vol. 31, March 28, 1891, pp. 195–201.

The America Fore Group of Insurance Companies, Research Department, "Some Characteristic Fires in Fire Resistive Buildings," Selected from 20 years of records in the files of the NFPA "Quarterly," New York, NY, c. 1933.

The British Constructional Steelwork Association, "Modern Fire Protection for Structural Steelwork," Publication No. FP1, London, 1961.

The Institution of Structural Engineers and The Concrete Society, *Fire Resistance of Concrete Structures,* London, August 1975.

Thomas, F. G. and Webster, C. T., "Investigations on Building Fires, Part VI: The Fire Resistance of Reinforced Concrete Columns," *National Building Studies,* Research Paper, No. 18, Dept. of Scientific and Industrial Research (Building Research Station), London, HMSO, 1953.

Thompson, J. P., *Fire Resistance of Reinforced Concrete Floors,* Portland Cement Association, Chicago, 1963.

Underwriters Laboratories, "An Investigation of the Effects of Fire Exposure upon Hollow Concrete Building Units, Conducted for American Concrete Institute, Concrete Products Association, Portland Cement Association, Joint Submittors," *Retardant Report,* No. 1555, Chicago, IL, May 1924.

Underwriters Laboratories, "Fire Exposure Tests of Ordinary Wood Doors," *Bulletin of Research,* No. 6, December 1938, Chicago, IL, 1942.

Underwriters Laboratories, "Fire Hazard Classification of Building Materials," Bulletin, No. 32, September 1944, Chicago, IL, 1959.

Underwriters Laboratories, *Fire Protection Equipment List,* Chicago, IL, January 1957.

Underwriters Laboratories, *Fire Resistance Directory; with Hourly Ratings for Beams, Columns, Floors, Roofs, Walls, and Partitions,* Chicago, IL, January 1977.

Underwriters Laboratories, "Fire Tests of Building Construction and Materials," 8th ed., *Standard for Safety,* UL263, Chicago, IL, 1971.

Underwriters Laboratories: "Report on Fire Hazard Classification of Various Species of Lumber," *Retardant Report,* No. 3365, Chicago, IL, 1952.

Underwriters Laboratories, "Report on Interior Building Construction Consisting of Metal Lath and Gypsum Plaster on Wood Supports," *Retardant Report,* No. 1355, Chicago, IL, 1922.

Underwriters Laboratories, "Report on Investigation of Fire Resistance of Wood Lath and Lime Plaster Interior Finish," Publication SP. 1. 230, Chicago, IL, November 1922.

Wardle, T. M. "Notes on the Fire Resistance of Heavy Timber Construction," Information Series, No. 53, New Zealand Forest Service, Wellington, New Zealand, 1966.

Webster, D. J. and Ashton, L. A., "Investigations on Building Fires, Part IV: Fire Resistance of Timber Doors," *National Building Studies,* Technical Paper, No. 6, Dept. of Scientific and Industrial Research (Building Research Station), London, 1951.

Woolson, I. H. and Miller, R. P., "Fire Tests of Floors in the United States," Proceedings International Association for Testing Materials, VIth Congress, New York, NY, 1912, Section C. pp. 36–41.

Yuill, C. H., Bauershclag, W. H., and Smith, H. M., "An Evaluation of the Comparative Performance of 2.4.1 Plywood and Two-Inch Lumber Roof Decking under Equivalent Fire Exposure," Fire Protection Section, Final Report, Project No. 717A-3-211, Southwest Research Institute, Dept. of Structural Research, San Antonio, TX, December 1962.

Copyright National Fire Protection Association
Provided by IHS under license with NFPA
No reproduction or networking permitted without license from IHS
Not for Resale

Annex P BSI Timber Panel Door Standard

This annex is not a part of the requirements of this NFPA document but is included for informational purposes only.

P.1 Ability to Withstand Fire Exposure. The information provided in Annex P shows a summary of the ability of various door configurations to withstand a fire exposure on one side. This information might be useful to assist in establishing equivalent door designs in existing buildings when it may be impractical to install modern fire doors. This annex is extracted from the U.S. Department of Housing and Urban Development, *Guideline on Fire Ratings of Archaic Materials and Assemblies*.

P.2 Upgrading the Fire Resistance of Wood Panel Doors. Section P.2 contains information from the English Heritage Technical Guidance Note, "Timber Paneled Doors and Fire," on upgrading the fire resistance of wood panel doors. Twenty-eight panel door treatments are shown in Figure P.2, and the fire resistance ("result") of each is stated in minutes.

The fire resistance data is based on tests performed in accordance with British Standard 476, *Fire Tests on Building Materials and Structures*. The actual fire resistance of each door treatment will vary with the door's condition, the quality of its construction, and the hardware used.

Test reference notations are composed of the initials of the test sponsor, the initials of the testing house, the test number, and the test date, such as EH/WFRC 55983 7/4/92,

where:

EH	=	English Heritage
GLC	=	Greater London Council
HRPA	=	Historic Royal Palaces Agency
FRS	=	Fire Research Station
FITO	=	Fire Insurers Test Organization
TRADA	=	Timber Research and Development Association
WFRC	=	Warrington Fire Research Center

Dimensions are shown in millimeters, where:

⅛ in.	=	3.2 mm
¼ in.	=	6.4 mm
⅜ in.	=	9.5 mm
½ in.	=	12.7 mm
⅝ in.	=	15.9 mm
¾ in.	=	19.0 mm
⅞ in.	=	22.2 mm
1 in.	=	25.4 mm

Since 0.1 mm equals only $\frac{1}{254}$ in., conversions may be rounded to the nearest millimeter ($\frac{1}{25.4}$ in.).

Copyright National Fire Protection Association
Provided by IHS under license with NFPA
No reproduction or networking permitted without license from IHS
Not for Resale

face exposed to fire	Result (minutes)
1 *ref: GLC/FRS 30/6/80* 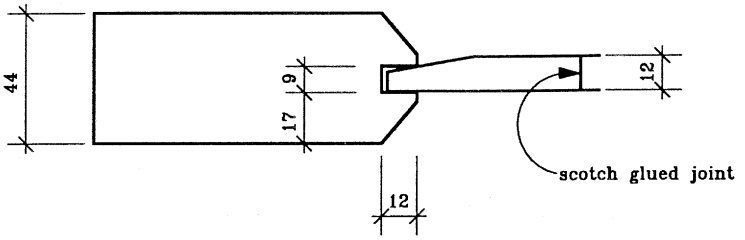	**11** Location of failure: panel joint
2 *ref: GLC/FRS 30/6/80* 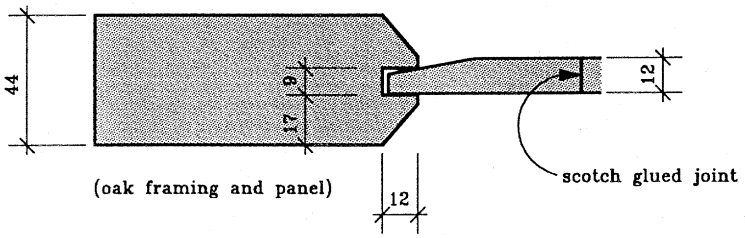	**9** Location of failure: panel joint
3 *ref: EH/WFRC 53430 6/2/92* 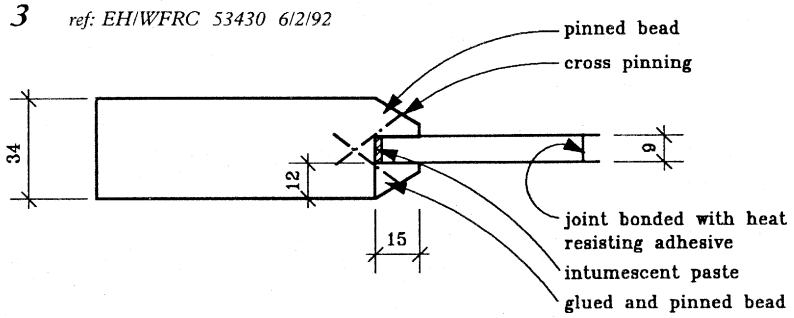	**15** Location of failure: burn through panel
4 *ref: EH/WFRC 55983 7/4/92* 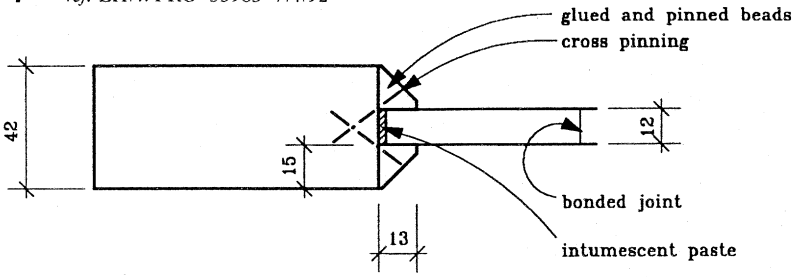	**20** Location of failure: panel/framing joint

Note: All doors constructed from softwood unless otherwise stated. (1 of 7)

FIGURE P.2 Summary of Fire Test Results. (Source: National Institute of Building Sciences; reprinted by permission of English Heritage.)

Copyright National Fire Protection Association
Provided by IHS under license with NFPA
No reproduction or networking permitted without license from IHS
Not for Resale

face exposed to fire	Result (minutes)
5 *ref: EH/WFRC 48927 6/6/90* 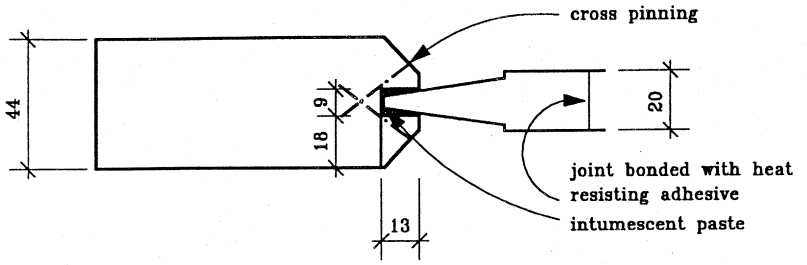 	**24** Location of failure: panel /framing joint
6 *ref: EH/WFRC 53430 6/2/90* 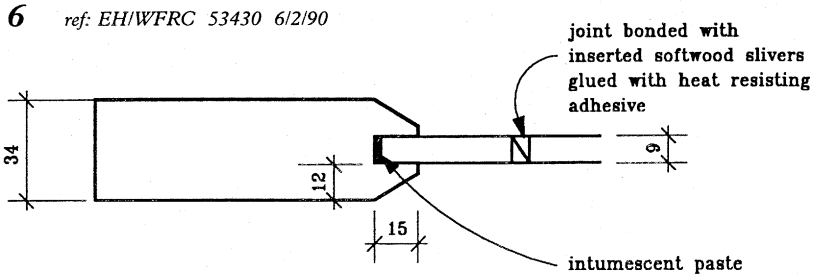 	**6** Location of failure: panel joint
7 *ref: GLC/FRS 2/7/80* 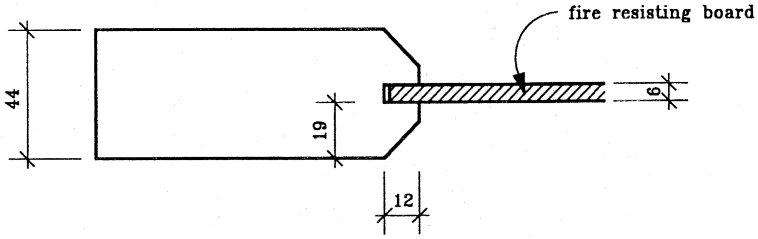 	**16.5** Location of failure: panel/framing joint
8 *ref: GLC/FRS 2/7/80* 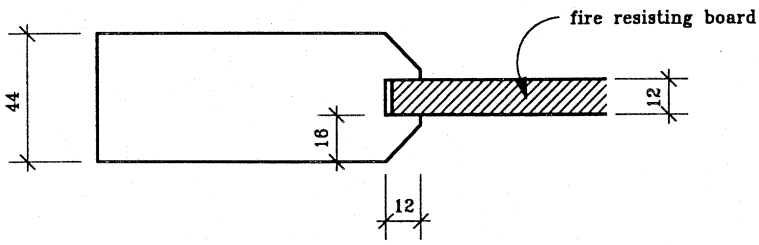 	**13** Location of failure: panel/framing joint

Note: All doors constructed from softwood unless otherwise stated. (2 of 7)

FIGURE P.2 ***Continued***

Copyright National Fire Protection Association
Provided by IHS under license with NFPA
No reproduction or networking permitted without license from IHS
Not for Resale

face exposed to fire	Result (minutes)
9 *ref: EH/WFRC 53462 6/4/92* 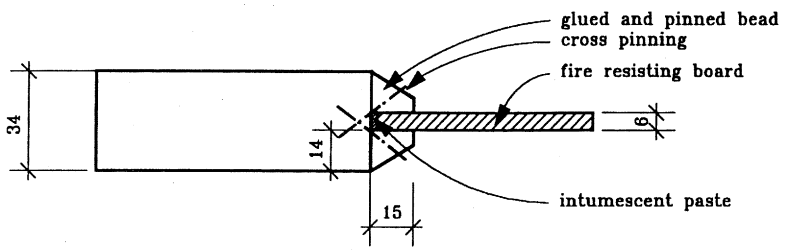 	29
10 *ref: GLC/FIRTO 20/10/78* 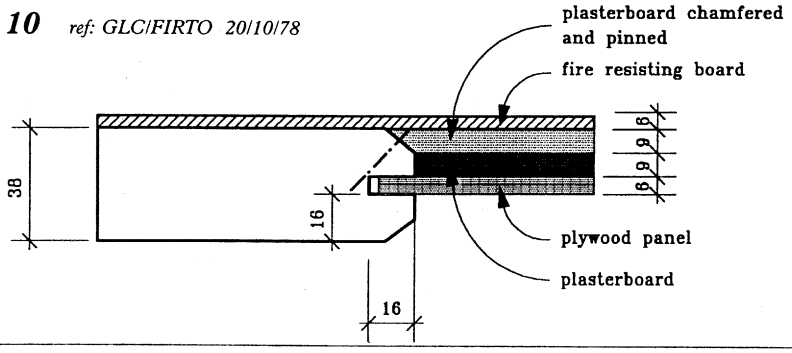 	28 Location of failure: door leaf/frame junction
11 *ref: -/TRADA D9A 4/87* 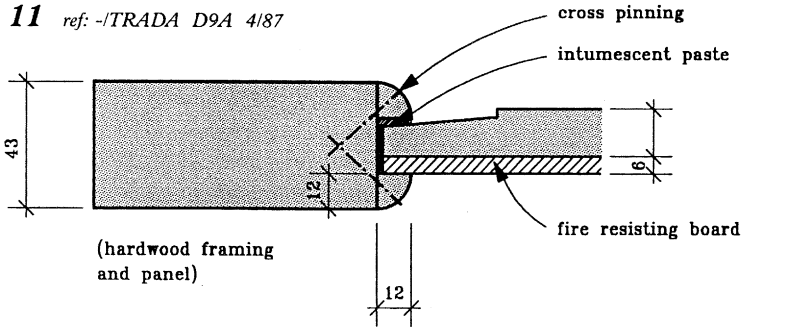 	30
12 *ref: -/TRADA D9A 4/87* 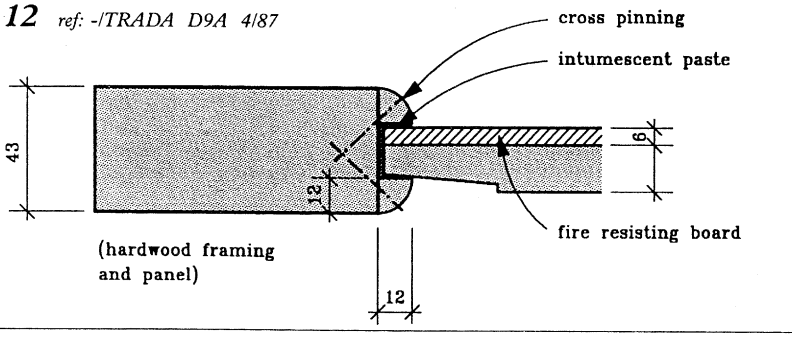 	21

Note: All doors constructed from softwood unless otherwise stated. (3 of 7)

FIGURE P.2 ***Continued***

Copyright National Fire Protection Association
Provided by IHS under license with NFPA
No reproduction or networking permitted without license from IHS
Not for Resale

face exposed to fire	***Result*** *(minutes)*
13 *ref: -/TRADA D10 4/87* 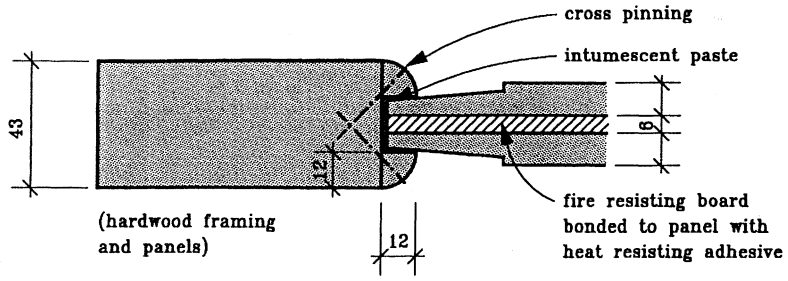	**30**
14 *ref: -/TRADA D7 4/87* 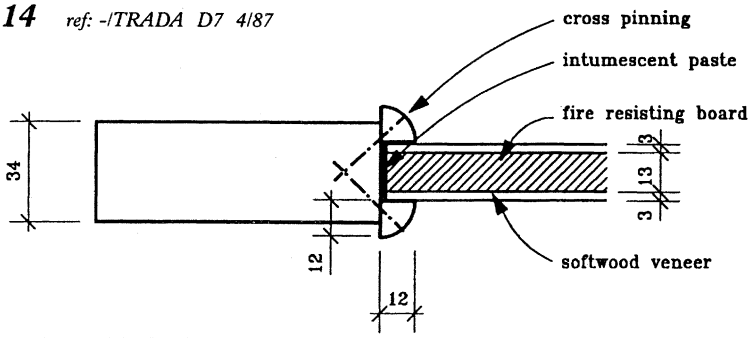	**30**
15 *ref: -/TRADA D8 4/87* 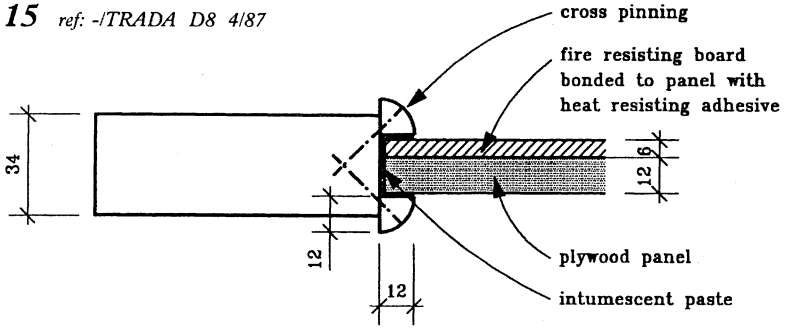	**30**
16 *ref: EH/WFRC 55984 7/4/92* 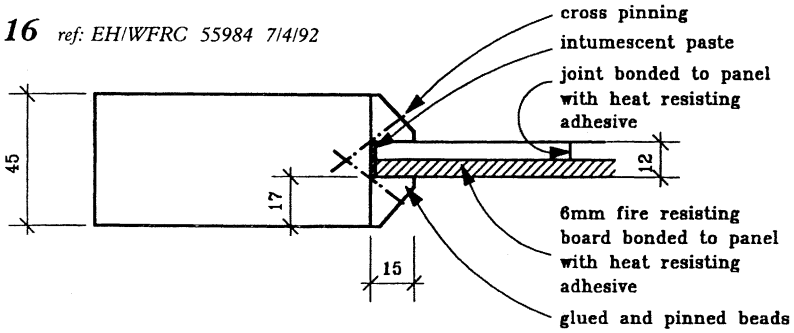	**30+**

Note: All doors constructed from softwood unless otherwise stated. (4 of 7)

FIGURE P.2 ***Continued***

Copyright National Fire Protection Association
Provided by IHS under license with NFPA
No reproduction or networking permitted without license from IHS
Not for Resale

face exposed to fire	Result (minutes)
17 *ref: EH/WFRC 60184 25/10/93* 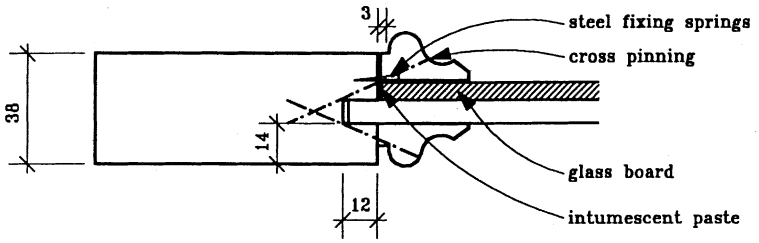 	**27** Location of failure: panel/framing joint
18 *ref: EH/WFRC 55984 7/4/92* 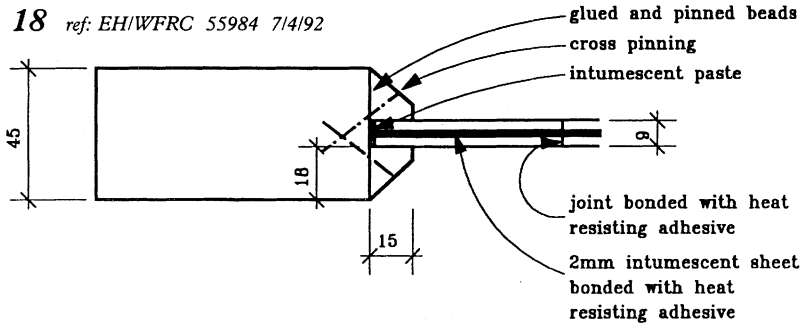 	**23** Location of failure: burn through panel
19 *ref: EH/WFRC 48926 6/6/90* 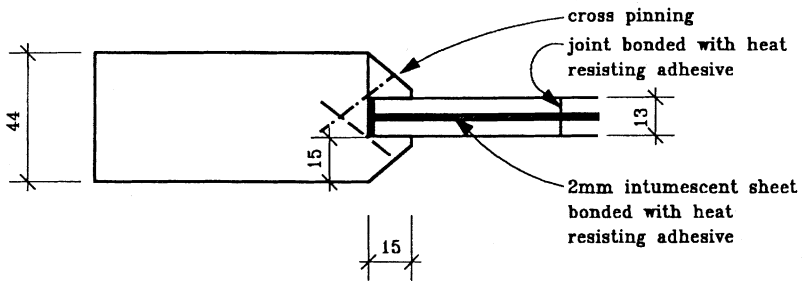 	**30+**
20 *ref: EH/WFRC 48926 6/6/90* 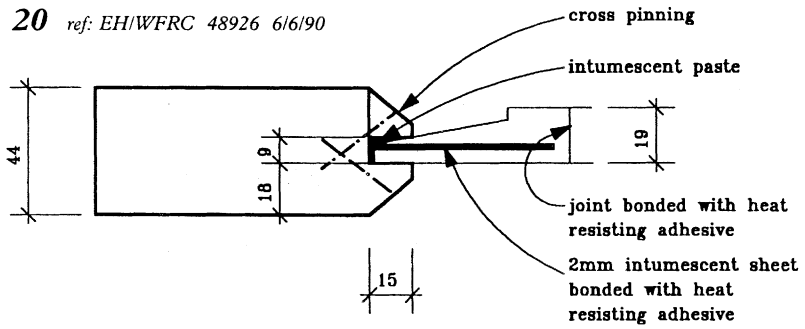 	**30+**

Note: All doors constructed from softwood unless otherwise stated. (5 of 7)

FIGURE P.2 ***Continued***

Copyright National Fire Protection Association
Provided by IHS under license with NFPA
No reproduction or networking permitted without license from IHS
Not for Resale

face exposed to fire	Result (minutes)
21 *ref: EH/WFRC 53462 6/4/92* 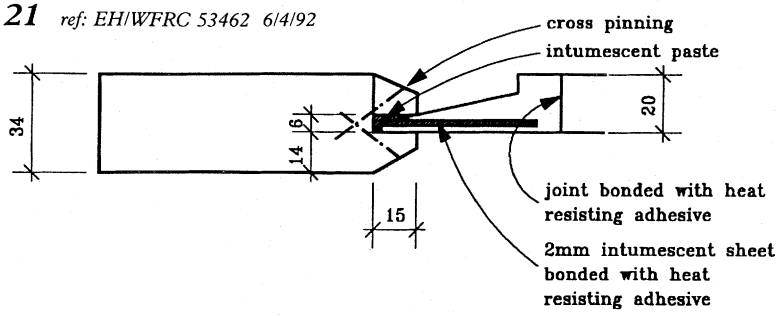	**29.5** Location of failure: burn through panel
22 *ref: EH/WFRC 55983 7/4/92* 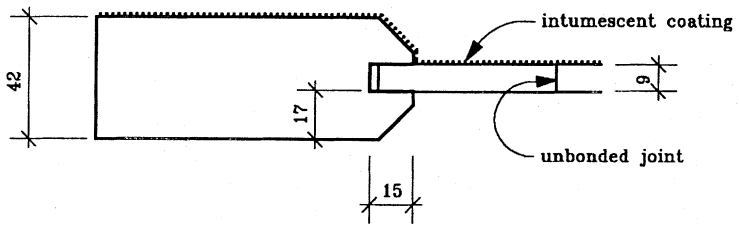	**11** Location of failure: panel joint
23 *ref: EH/WFRC 48927 6/6/90* 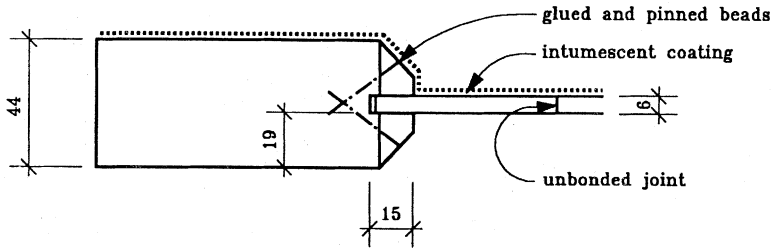	**17** Location of failure: panel/frame joint
24 *ref: Sealmaster/WFRC 62398 14/9/94* 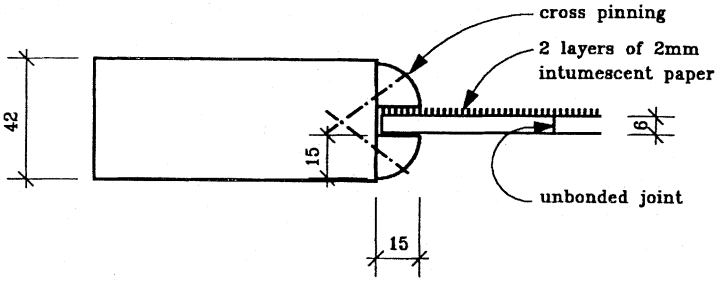	**30+**

Note: All doors constructed from softwood unless otherwise stated. (6 of 7)

FIGURE P.2 *Continued*

Copyright National Fire Protection Association
Provided by IHS under license with NFPA
No reproduction or networking permitted without license from IHS
Not for Resale

face exposed to fire	Result (minutes)
25 *ref: Sealmaster/WFRC 62398 14/9/94* 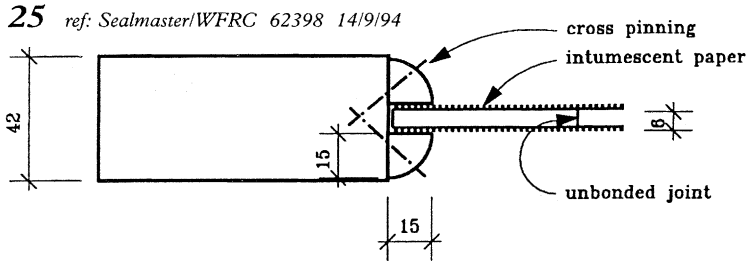	30
26 *ref: HRPA/TRADA FR 95082 9/9/95* 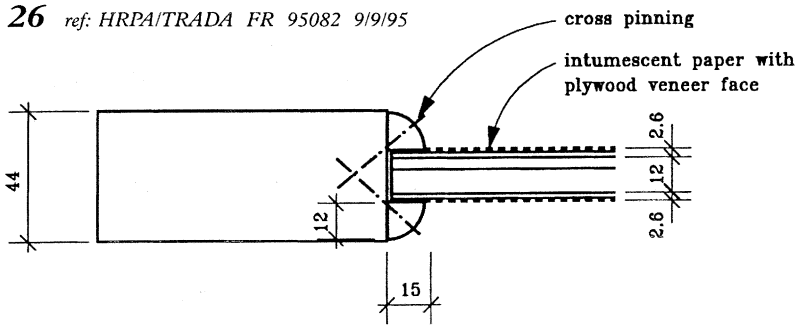	30
27 *ref: - TRADA D5 4/87* 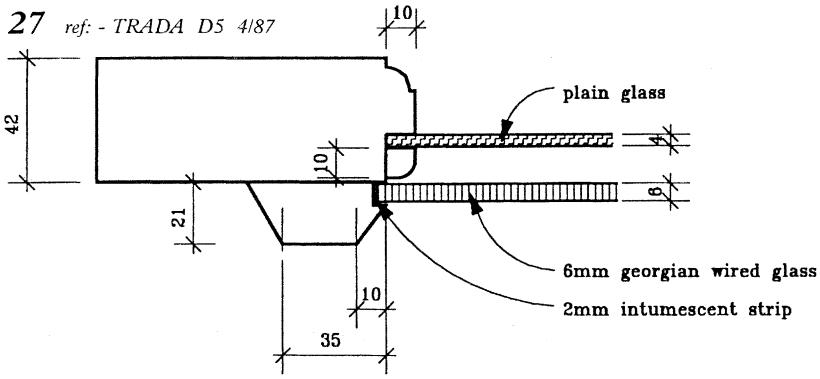	30
28 *ref: - TRADA D6 4/87* 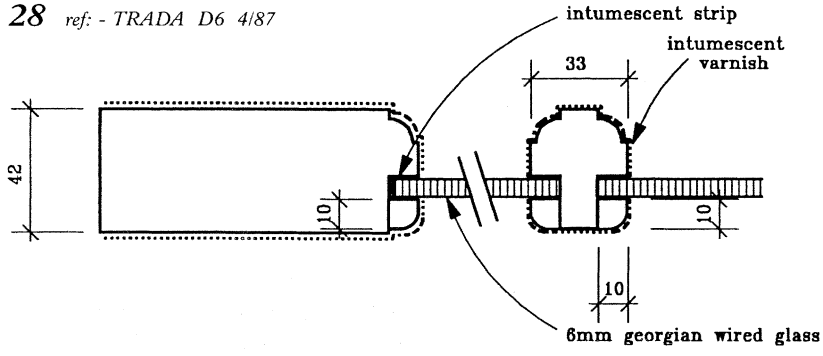	30

Note: All doors constructed from softwood unless otherwise stated. (7 of 7)

FIGURE P.2 ***Continued***

Copyright National Fire Protection Association
Provided by IHS under license with NFPA
No reproduction or networking permitted without license from IHS
Not for Resale

Annex Q Informational References

Q.1 Referenced Publications. The documents or portions thereof listed in this annex are referenced within the informational sections of this code and are not part of the requirements of this document unless also listed in Chapter 2 for other reasons.

Q.1.1 NFPA Publications. National Fire Protection Association, 1 Batterymarch Park, Quincy, MA 02169-7471.

NFPA 10, *Standard for Portable Fire Extinguishers*, 2007 edition.

NFPA 11, *Standard for Low-, Medium-, and High-Expansion Foam*, 2005 edition.

NFPA 12, *Standard on Carbon Dioxide Extinguishing Systems*, 2005 edition.

NFPA 12A, *Standard on Halon 1301 Fire Extinguishing Systems*, 2004 edition.

NFPA 13, *Standard for the Installation of Sprinkler Systems*, 2007 edition.

NFPA 14, *Standard for the Installation of Standpipe and Hose Systems*, 2007 edition.

NFPA 17, *Standard for Dry Chemical Extinguishing Systems*, 2002 edition.

NFPA 17A, *Standard for Wet Chemical Extinguishing Systems*, 2002 edition.

NFPA 20, *Standard for the Installation of Stationary Pumps for Fire Protection*, 2003 edition.

NFPA 22, *Standard for Water Tanks for Private Fire Protection*, 2003 edition.

NFPA 70, *National Electrical Code®*, 2005 edition.

NFPA 70B, *Recommended Practice for Electrical Equipment Maintenance*, 2006 edition.

NFPA 72®, *National Fire Alarm Code®*, 2007 edition.

NFPA 92B, *Standard for Smoke Management Systems in Malls, Atria, and Large Spaces*, 2005 edition.

NFPA *101®*, *Life Safety Code®*, 2006 edition.

NFPA 101A, *Guide on Alternative Approaches to Life Safety*, 2007 edition.

NFPA 241, *Standard for Safeguarding Construction, Alteration, and Demolition Operations*, 2004 edition.

NFPA 255, *Standard Method of Test of Surface Burning Characteristics of Building Materials*, 2006 edition.

NFPA 269, *Standard Test Method for Developing Toxic Potency Data for Use in Fire Hazard Modeling*, 2007 edition.

NFPA 291, *Recommended Practice for Fire Flow Testing and Marking of Hydrants*, 2007 edition.

NFPA 550, *Guide to the Fire Safety Concepts Tree*, 2002 edition.

NFPA 730, *Guide for Premises Security*, 2006 edition.

NFPA 731, *Standard for the Installation of Electronic Premises Security Systems*, 2006 edition.

NFPA 909, *Code for the Protection of Cultural Resource Properties — Museums, Libraries, and Places of Worship*, 2005 edition.

NFPA 1221, *Standard for the Installation, Maintenance, and Use of Emergency Services Communications Systems*, 2007 edition.

NFPA 1600, *Standard on Disaster/Emergency Management and Business Continuity Programs*, 2004 edition.

NFPA 2001, *Standard on Clean Agent Fire Extinguishing Systems*, 2004 edition.

NFPA *Fire Protection Handbook*, 19th edition, 2003.

SFPE Engineering Guide to Performance-Based Fire Protection Analysis and Design of Buildings, 2000 edition.

SFPE Handbook of Fire Protection Engineering, 2002 edition.

Q.1.2 Other Publications.

Q.1.2.1 ASTM Publications. ASTM International, 100 Barr Harbor Drive, P.O. Box C700, West Conshohocken, PA 19428-2959.

ASTM E 84, *Standard Test Method for Surface Burning Characteristics of Building Materials,* 2005.

ASTM E 1355, *Standard Guide for Evaluating the Predictive Capability of Deterministic Fire Models*, 1997.

ASTM E 1472, *Standard Guide for Documenting Computer Software for Fire Models*, 1998.

Q.1.2.2 U.S. Government Publications. U.S. Government Printing Office, Washington, DC 20402.

Guideline on Fire Ratings of Archaic Materials and Assemblies, National Institute of Building Sciences for the Department of Housing and Urban Development, 1090 Vermont Avenue, NW, Suite 700, Washington, DC 20005-4905, 2000 edition.

The Secretary of the Interior's Standards for Rehabilitation and Guidelines for Rehabilitating Historic Buildings, National Park Service, U.S. Department of the Interior, 1983.

Wisconsin Administrative Code, Subchapter IV, Building Evaluation Method, Chapter Comm 70–Historic Buildings, 2005.

Q.1.2.3 Other Publications.

Australian Fire Engineering Guidelines, 1996.

British Standard 476, *Fire Tests on Building Materials and Structures.*

British Standard Firesafety Engineering in Buildings, 00240-1997.

English Heritage Technical Guidance Note, "Timber Paneled Doors and Fire," English Heritage, 23 Savile Row, London W1X 1AB, www.english_heritage.org.

Goldstone, Barbara M., "Hazards from the Concentration of Solar Radiation by Textured Window Glass," Building Research Establishment Report, Department of the Environment, UK, 1982.

Olenick, S. and Carpenter, D., "An Updated International Survey of Computer Models for Fire and Smoke," *Journal of Fire Protection Engineering* 13, 2, 2003, pp. 87-110.

Underwriters Laboratories, Inc., *UL Fire Resistance Directory*, 2004.

Q.2 Informational References. The following documents or portions thereof are listed here as informational resources only. They are not a part of the requirements of this document.

Q.2.1 NFPA Publications. National Fire Protection Association, 1 Batterymarch Park, Quincy, MA 02169-7471.

Marchant, E. W., "Preventing Fire in Historic Buildings: The Acceptable Risk," *Fire Technology*, Vol. 25, No. 2, 1989, pp. 67–69.

"Protecting Our Heritage, A Discourse on Fire Protection and Prevention in Historic Buildings and Landmarks," 2nd edition, 1970.

Copyright National Fire Protection Association
Provided by IHS under license with NFPA
No reproduction or networking permitted without license from IHS
Not for Resale

Q.2.2 Other Publications.

Association of Preservation Technology Bulletin, Vol. 13, No. 2, 1981.

Alsford, Denis, "Fire Safety in Museums," *MUSE*, Canadian Museum Association, Ottawa, Ontario, Summer, pp. 18-23.

Bailey, Alan, Insall, Donald, and Kilshaw, Philip, "Fire Protection Measures for the Royal Palaces," Department of National Heritage, London, 1993.

"Building Codes and Historic Preservation," *Preservation Forum*, Vol. 2, No. 1, Spring 1988, pp. 11-17.

"Fire Prevention in the Conservation Laboratory," Center for Occupational Hazards, New York, NY, 1985.

"Fire Protection in Old Buildings and Historic Town Centres," Fire Protection Association, London, 1992.

"Fire Safety Retrofitting in Historic Buildings," Advisory Council on Historic Preservation and the General Services Administration, Washington, DC, 1989.

Fischer, Walter R., "Fire Safety Systems: Protecting Our Treasures from Threat of Fire," *Technology and Conservation*, Vol. 25, No. 2, February 1980, pp. 21–24.

Fisher, Thomas, "Fire Breaks: Fire Safety in Historic Buildings," *Progressive Architecture*, Vol. 67, No. 11, November 1986, pp. 116–121.

Fishlock, Michael, *The Great Fire at Hampton Court*, The Herbert Press, London, 1992.

Hunter, John E., "Security for Museums and Historic Houses: An Annotated Bibliography," Technical Leaflet 114 (History News 34:4), American Association for State and Local History, Nashville, TN, 1979.

Kidd, S., "Heritage Under Fire: A Guide to Protection of Historic Buildings," 2nd edition, Fire Protection Association, London, 1994.

"Maintenance of Fire Protection Systems" (Army Tm 5-695, NAVFAC NO-117, Air Force AFM 91.37), Departments of the Army, Navy and Air Force, Washington, DC, 1981.

Martin, John H., "The Corning Flood: Museum Under Water," Corning Museum of Glass, Corning, NY, 1977.

Morris, James Archibald, "Alloway: The Protection and Preservation of Its Memorials of Robert Burns," Ayrshire Association of Federated Burns Clubs, Ayreshire, UK, 1930.

Morris, John, "Managing the Library Fire Risk," 2nd Edition, University of California, 1979.

Nelson, Carl L., "Protecting the Past from Natural Disasters," Preservation Press, Washington, DC, 1991.

Parnell, Alan and Ashford, David H., "Fire Safety in Historic Buildings," Technical Pamphlet 6, Society for the Protection of Ancient Buildings and the Fire Protection Association, London, 1978.

Pielert, James H., "Removing Regulatory Restraints to Building Rehabilitation: The Massachusetts Experience," Center for Building Technology, National Bureau of Standards, Washington, DC, October 1981.

"Procedures for Salvage of Water-Damaged Library Materials," Peter Waters, Restoration Officer, Library of Congress, 1975. (Copies available upon request from the Library of Congress, Washington, DC 20540.)

"Protecting Our Records and Archives from Fire — Report of the GSA Advisory Committee on the Protection of Archives and Records Centers," April 1977. [Available from the Superintendent of Documents, Government Printing Office, Washington, DC 20402 (Stock No. 022-002-00049-0).]

"Safety Building Codes and Historic Buildings," Information Series No. 57, National Trust for Historic Preservation, Washington, DC, 1992. Special issue for CIB W14 (Fire) Subgroup on the Fire Protection of Historical Buildings, *Fire Science and Technology*, Vol. 11, Nos. 1 and 2, Science University of Tokyo, 1991.

Sellers, David Y. and Strassberg, Richard, "Anatomy of a Library Emergency," *Library Journal*, American Library Association, Vol. 98, No. 17 (October 1, 1973), pp. 2824–2827.

Tillotson, Robert G., "Museum Security," International Council of Museums and American Association of Museums, Paris, 1977.

Tiszkus, A. T. and Dressler, E. G., "Fire Protection Planning for Cultural Institutions: Blending Risk Management, Loss Prevention, and Physical Safeguards," *Technology and Conservation*, Vol. 5, No. 2, Summer 1980, pp. 18–23.

Willman Spawn, "After the Water Comes," PLA Bulletin, Pennsylvania Library Association, Vol. 28, No. 6 (November 1973), pp. 243–251.

Wilson, J. Andrew, "Fire Fighters — An Automatic Fire Suppression System Is Among Your Museum's Best and Safest Forms of Insurance," *Museum News*, Vol. 68, No. 6, American Association of Museums, Washington, DC, November/December 1989, pp. 68–72.

Q.3 References for Extracts in Informational Sections.

NFPA *101®*, *Life Safety Code®*, 2006 edition.

NFPA 220, *Standard on Types of Building Construction*, 2006 edition.

NFPA 472, *Standard for Professional Competence of Responders to Hazardous Materials Incidents*, 2002 edition.

NFPA 805, *Performance-Based Standard for Fire Protection for Light Water Reactor Electric Generating Plants*, 2006 edition.

NFPA 921, *Guide for Fire and Explosion Investigations*, 2004 edition.

NFPA 5000®, *Building Construction and Safety Code®*, 2006 edition.

Copyright National Fire Protection Association
Provided by IHS under license with NFPA
No reproduction or networking permitted without license from IHS
Not for Resale

Index

Copyright © 2006 National Fire Protection Association. All Rights Reserved.

The copyright in this index is separate and distinct from the copyright in the document that it indexes. The licensing provisions set forth for the document are not applicable to this index. This index may not be reproduced in whole or in part by any means without the express written permission of NFPA.

-A-

Access
Construction areas 6.3, 13.2.8.2.4, 13.3.1.4, 13.6.1, A.13.6.1.1.1
Control area, designated 11.11, 13.6.1.1, A.13.6.1.1.1
Control for security 6.4
Fire fighting 6.3.2, 12.10.6, 13.2.8.2.4, 13.3.1.4, 13.6.1, A.13.6.1.1.1
Adaptive reuse 4.3.2.4, A.4.3.2.4
Definition 3.3.1
Additions ..... 4.3.2.5, Chap. 12
Definition 3.3.2
Adjacent structures 7.3.1.4
Air-conditioning systems 11.9
Air movement 11.3.2
Alarm systems .....*see* Fire alarm systems
Alterations ..... 4.3.2.5, Chap. 12
Alternative calculation procedure (definition) 3.3.3
Application of code 1.3
Approved (definition) ..... 3.2.1, A.3.2.1; *see also* Authority having jurisdiction
Arc-fault circuit-interrupters ..... 8.2(11), A.11.7.2
Archaic materials and assemblies, guideline on fire ratings of ..... Annex O
Arson ..... 6.1.1 to 6.1.3, A.6.1
Definition 3.3.4
Assessment methods ..... Annex I
Assumptions 9.4.2
Atrium (definition) 3.3.5, A.3.3.5
Attics 11.4.2
Authority having jurisdiction
Approval by 1.6.2, 7.8, 8.1.3.1, 9.1.3, 9.5.1.1, 10.3.2, 10.4.1, 10.5.1, 11.6.1, 13.1.2, A.9.1.3
Construction precautions, role in 13.1.2, 13.2.2.2
Definition 3.2.2, A.3.2.2
Enforcement by 10.10
Fire emergency response plan, role in 10.5.1
Management plan, role in 10.2.2, 10.3.2, 10.4.1
Performance-based option, role in 9.1.3, 9.1.4, 9.1.6, 9.1.7.3, A.9.1.3, A.9.1.4
Prescriptive-based option, role in 8.1.3.1, 8.1.4.1

-B-

Barriers A.9.5.1
Fire ..... 8.2(6), 13.4.5.4, A.8.2(6), A.9.5.3.0
Definition 3.3.6.1, A.3.3.6.1
Maintenance of 14.8
Smoke ..... 8.2(4)
Definition 3.3.6.2, A.3.3.6.2
Thermal (definition) 3.3.6.3, A.3.3.6.3
Building manager
Definition 3.3.7
Exit interview 7.9.3
Buildings
Definition 3.3.9, A.3.3.9
Historic (definition) 3.3.40, A.3.3.40
Building survey ..... 7.3, A.7.3, A.10.2.1, Annex C
Building systems .....*see also* Electrical systems and equipment; Fire suppression systems, automatic
Communications 13.7
Definition 3.3.8, A.3.3.8
HVAC ..... 11.9; *see also* Heating equipment and systems

-C-

Cabling, communication 11.8, 12.3.2
Canopies 15.7.1
Carbon dioxide extinguishing systems ..... Table 12.4.4.2, Table 14.3.1
Character-defining features 4.3.2, A.4.3.2.1, A.4.3.2.4, A.9.4.3
Definition 3.3.10
Fire safety issues 7.3.3.1.3
Identification of 7.3.1.1.2, 7.3.1.2, 7.3.1.3, 7.3.1.5, 7.3.1.6, A.7.3.1.2, A.7.3.1.3
Performance-based design 9.4.3, A.9.4.3
Prioritization of 7.3.2
Chimneys 11.6.4, 14.6
Christmas trees 11.2.3
Clean agent extinguishing systems ..... Table 12.4.4.2, Table 14.3.1
Closing of building, procedures for 10.12, A.10.12
Code .....*see also* Equivalency
Compliance with .....*see* Compliance
Definition 3.2.3, A.3.2.3
Enforcement 1.6, A.1.6
NFPA code adoption ..... Annex M
Prescriptive-based document (definition) ..... 3.3.64, A.3.3.64; *see also* Prescriptive-based option
Collections
Definition 3.3.11
Fire in collections room A.9.5.3.4
Combustible materials .....*see also* Flammable and combustible gases; Flammable and combustible liquids
Clothing 11.4.6
Design fire scenario 9.5.3.9, A.9.5.3.9
Housekeeping ..... 11.4.1, 11.4.2.2, 11.4.3 to 11.4.6, 12.2.3.2, A.11.4.5
Packing materials 11.4.8, A.11.4.8.1
At special events 15.7
Communication cabling 11.8, 12.3.2
Communications, emergency 13.7, 15.3.3, A.15.3.3
Compartments .....*see* Fire compartments
Compliance .....*see also* Equivalency
Alternatives, examples of ..... Annex F
With codes or standards ..... 1.5, 7.3.3.1, 8.1.2, 8.1.3.2, A.7.3.3.1.3, A.8.1.2, A.8.1.3.2, Annex G
Definition 3.3.13
With fire safety management plan 10.10
Concealed spaces ..... 8.2(6), 9.5.3.5, A.8.2(6), A.9.5.3.5
Conservation (definition) ..... 3.3.14, A.3.3.14; *see also* Historic preservation
Construction 4.3.1.3, 4.3.2.5
Archaic materials and assemblies, guideline on fire ratings of ..... Annex O
Deficiencies 7.3.3.2
Equipment 13.3.2.1
Exterior features 7.3.1.3, A.7.3.1.3
Fire protection ..... Chap. 13
Interior features 7.3.1.6, A.7.3.1.6
Materials, storage of 13.3.2.2
Offices and sheds 13.3.1
Oversight 12.2
Precautions 13.2
Processes and hazards 13.4, A.13.4.7.2
Security, site 6.3, 12.2.3.2
Supervision and watch service 12.2.3, 13.2.2

Copyright National Fire Protection Association
Provided by IHS under license with NFPA
No reproduction or networking permitted without license from IHS
Not for Resale

Temporary construction
Enclosures 13.2.3
Offices and sheds 13.3
Contents, building ..... 8.2(3), 9.5.3.2.1, 10.2.2
Contractors
Initial meeting/indoctrination of 12.2.2
Selection 12.2.1
Contracts 13.2.1, 13.2.2.1
Cooking equipment ..... 12.4.1, Table 14.3.1
Inspection, testing, and maintenance 14.5
Operation 11.10
Special events, use at 15.4
Crawl spaces 11.4.2
Cultural resource properties A.10.2
Definition 3.3.15, A.3.3.15

-D-

Damage limitation plan A.10.2.1
Definition 3.3.16
Dampers, fire/smoke 12.3.1, A.9.5.3.9
Data conversion (definition) ..... 3.3.17; *see also* Input data specifications
Decorations 11.2, 15.7.2
Defend in place 4.3.1.1, 4.3.1.2
Definitions ..... Chap. 3
Delayed egress locking devices 6.2
Demolition 13.4.5
Design appraisal ..... Annex B
Design fire scenario ..... *see* Scenario
Design review 7.6
Design specifications
Definition 3.3.18, A.3.3.18
Performance-based option ..... 9.4, A.9.4.1 to A.9.4.10
Design team 9.8.12
Definition 3.3.19, A.3.3.19
Detection systems A.10.2.1
During construction 13.2.8.1
Inspection, testing, and maintenance ..... Table 14.3.1
Out of operation A.9.5.3.9
Performance-based design A.9.5.1
Prescriptive-based design ..... 8.2(8), A.8.2(8)
Documentation
Fire safety management plan 10.8
Performance-based option ..... 9.8, 9.9, A.9.8.1 to A.9.8.11
Retention of records 9.9, 14.1.2
Doors ..... A.9.5.3.4; *see also* Fire doors
Access to 11.4.1
BSI timber panel door standard ..... Annex P
Closed 11.3.1, A.9.5.3.7, A.9.5.3.9, A.10.12
Open 9.5.3.3, 11.3.2, A.9.5.3.3
Smoke-resistant ..... 8.2(4)
Dry chemical systems ..... Table 12.4.4.2, Table 14.3.1
Ducts 11.4.4, 11.9.3, 12.3.2, 14.5.2
Dumbwaiters 12.3.3
Dusts
In ducts, stacks, filters 11.4.4
Floor sanders, bags from 13.4.6.2

-E-

Early warning (definition) 3.3.20
Electrical rooms 11.4.3
Electrical systems and equipment 11.7, A.11.7.2
Additions, alterations, and renovations 12.6
Construction, wiring and equipment in 13.2.4.4, 13.4.5.2, 13.4.7, A.13.4.7.2
Maintenance of 11.7.2, 14.7, A.11.7.2
Special events 15.8, A.15.8.3
Elevator shafts 12.3.3
Emergency communications 13.7, 15.3.3, A.15.3.3
Emergency impairments ..... *see* Impairments
Emergency power 12.6.2
Emergency response personnel 9.4.6
Enclosures, temporary 13.2.3
Enforcement of code 1.6, A.1.6
Environmental conditions, construction site 13.4.8
Equivalency 1.4, 7.3.3.1.2
Definition 3.3.21
Prescriptive-based option 8.1.3, 8.2, A.8.1.3, A.8.2
Evacuation ..... 4.3.1.1, 4.3.1.2, 10.5.4, 10.5.5, 15.3.1, 15.3.5; *see also* Fire drills
Exit access 15.3.1, 15.3.2
Definition 3.3.23
Exit discharge (definition) 3.3.24
Exit interview 7.9.3, 10.9.3
Exits ..... 7.3.3.4.2, 9.4.5.3, A.10.12; *see also* Means of egress
Construction areas 13.4.3.5
Definition 3.3.22
Special events ..... 15.3.1 to 15.3.4, A.15.3.3, A.15.3.4
Exposure fires 9.5.3.8, A.9.5.3.8
Definition 3.3.25, A.3.3.25
Exterior 7.3.1.2, 9.5.3.8.1, A.7.3.1.2
Extinguishers, portable fire 12.4.5, A.9.5.1, A.10.2.1, A.10.12
Construction areas and operations 12.2.3.2, 13.2.3.4, 13.2.4.5, 13.4.2.5, 13.4.3.4.1, 13.6.1.5, 13.6.5
Cooking operations 11.10.4
Maintenance of 14.10
Open flames, use of 11.6.3
Training for use of 10.6.2, 10.6.3, 10.8.3

-F-

Fire, basics of ..... Annex D
Fire alarm systems ..... 8.2(8), 12.4.2, Table 14.3.1, A.8.2(8)
During construction 13.2.8.1.1, 13.2.8.1.5
Definition 3.3.86.1
Monitoring 12.4.2.3
Nonoperational A.9.5.3.9
Records 10.8.3
Special events, notification at 15.3.3, A.15.3.3
Fire barriers ..... *see* Barriers
Fire compartments A.9.5.3.9
Definition 3.3.26
Fire department notification ..... 8.2(8), 10.5.2, 10.5.3, 14.4.3.2(4), A.8.2(8)
Fire detection ..... *see* Detection systems
Fire doors ..... 8.2(4), 12.3.1, 13.4.5.4, 13.5.2, 13.5.3, A.9.5.3.9
Door-holding devices 12.3.4
Self-closing A.9.5.3.9
Fire drills 10.2.2, 10.5.5, 10.7, 10.8.3
Fire emergency response plan 10.5, 10.8.3, A.10.2.1, A.10.5.1
Fire hazards 7.3.3.2
Building characteristics and 9.4.3, A.9.4.3
During construction ..... 13.2.1, 13.2.2.1, 13.2.3 to 13.2.7, 13.4, A.13.4.7.2
Contracts, controls specified in 13.2.1, 13.2.2.1
Definition 3.3.27
Fire load (definition) 3.3.28
Fire model ..... *see also* Input data specifications
Definition 3.3.29, A.3.3.29
Features of 9.8.11, A.9.8.11
Modeler, capability of 9.8.12
Fireplaces 11.6.3, 11.6.4, 14.6
Fire protection and prevention ..... Chap. 11, A.10.2.1
Basics of fire and fire protection systems ..... Annex D
During construction ..... Chap. 13
Manual fire suppression ..... 8.2(9)
Supervision 12.2.3, 13.2.2
Fire protection plan 6.1.3, 12.10.5
Fire protection systems ..... 4.3.2.1, 9.3.1, A.4.3.2.1, A.9.3.1, A.10.2.1, A.10.12; *see also* Fire suppression systems, automatic
Additions or renovations 12.4
Alterations or renovations 13.1.1
Basics of ..... Annex D

Copyright National Fire Protection Association
Provided by IHS under license with NFPA
No reproduction or networking permitted without license from IHS
Not for Resale

Construction, during 6.3.2, 12.2.3.2, 13.2.8, 13.4.8, 13.6, A.13.6.1.1.1
Definition 3.3.86.2
Design fire scenarios 9.5.3.1.1
Impairments ..... *see* Impairments
Inspection, testing, and maintenance 14.3, 14.4.4
Maintenance checklist ..... Annex K
Out-of-service 13.1.3, 13.6.4.3
Performance-based design 9.4.4, 13.1.1.1, A.9.4.4
Records 10.8.3
Training for use of 10.6.2
Fire-rated construction ..... 8.2(4), 8.2(5)
Fire ratings, guideline for archaic materials and assemblies ..... Annex O
Fire resistance rating 11.4.9.3, 12.7
Definition 3.3.30
Fire resistive
Construction and materials ..... 8.2(7), 13.5, A.8.2(7)
Definition 3.3.31
Fire retardant (definition) 3.3.32
Fire-retardant treated materials
Decorative materials 15.7.2
Furnishings and contents ..... 8.2(3)
Interior finish materials and historic fabrics ..... 8.2(2)
Maintenance of 14.9
Roofing 12.5
Tarpaulins and plastic sheeting 13.2.3.1
Tents and canopies 15.7.1
Fire safety 4.3.2.1, A.4.3.2.1
Deficiencies 7.3.3.2
Inspection forms ..... Annex J
Issues, identification of 7.3.3, A.7.3.3.1.3
Performance-based design 9.7, 9.8.9, A.9.7
Fire safety management plan 10.2.3, 10.3
Compliance 10.10
Modification 10.11
Periodic compliance audit 10.9, 10.9.3.2, A.10.9
Record keeping 10.8
Fire safety manager ..... 10.2.1 to 10.2.3, 10.5.1, 10.6.1, 10.8.1, 10.9.3.1, 14.4.2.2, A.10.2.1, A.10.5.1, A.10.12
Definition 3.3.33, A.3.3.33
Fire spread
Control of 11.3, 12.3, A.11.3
Potential paths of 7.3.3.3
Fire stops ..... 8.2(6), A.8.2(6)
Definition 3.3.35
Fire suppression, manual ..... 8.2(9), 13.6.1.5, 13.6.3; *see also* Extinguishers, portable fire
Fire suppression systems, automatic ..... 8.2(9), A.9.5.1
Additions, alterations, and renovations 12.4.3, 12.4.4
Construction, during 13.2.8.2 13.6.1.5, 13.6.2, 13.6.4
Impairments ..... *see* Impairments
Inspection, testing, and maintenance 14.3, 14.4.4
Fire walls ..... 8.2(4), 13.4.5.4, 14.8, A.9.5.3.9
Fire watch 14.4.1.1, 14.4.1.2
Definition 3.3.34
Fireworks 15.6
Flames, open ..... *see* Open flame use
Flammable and combustible gases ..... 12.2.3.2, 13.2.4.3, 13.4.1.3, 13.4.3.6.2 to 13.4.3.6.7, 13.4.5.1
Flammable and combustible liquids ... 11.4.6, 11.4.7, 12.2.3.2, 13.2.7
Floor plans 7.3.1.6, A.7.3.1.6
Foam systems ..... Table 12.4.4.2
Food service operations ..... *see* Cooking equipment
Fuel load
Definition 3.3.36, A.3.3.36
Largest possible 9.5.3.7.1, A.9.5.3.4
Furnishings ..... 8.2(3), 9.5.3.2.1

-G-

Gasoline-powered engines, use of 13.2.4.5, 13.2.7.4
Goals 4.1, 4.2, 9.1.2, A.4.2.2
Definition 3.3.37
Governing body 10.5.1, A.10.5.1
Definition 3.3.38

-H-

Halon systems ..... Table 12.4.4.2, Table 14.3.1
Hazardous areas
Definition 3.3.39, A.3.3.39
Separation of 12.7
Hazardous operations 13.4, A.13.4.7.2
Heating, ventilating, and air-conditioning (HVAC) systems 11.9
Heating equipment and systems
Inspection, testing, and maintenance 14.5
Portable heaters 11.9.4, 13.2.4.2
Temporary 13.3.1.2, 13.3.1.3, 13.4.2
Unvented fuel-fired equipment 11.9.5
Historic buildings (definition) 3.3.40, A.3.3.40
Historic elements 4.2, A.4.2.2
Identification of ..... 7.3.1, A.7.3.1.2 to A.7.3.1.6
Prioritization of 7.3.2
Historic fabric ..... 4.2(2), 4.2.2(3), 8.2(2), 10.2.2, 11.3.2, 12.2.3.2, A.10.2
Definition 3.3.41
Historic preservation
Compliance to code, options for 1.5.1, 4.4.2, 7.4.1
Definition 3.3.42
Goal of code 4.2.2
Objectives of code 4.3.2, A.4.3.2.1, A.4.3.2.4
Performance criteria 9.2.1, 9.2.2.2, A.9.2.2.2
Historic site 7.3, A.7.3
Definition 3.3.43
Elements 7.3.1.5
Secretary of the Interior's Standards ..... Annex N
Historic structures (definition) 3.3.44
Hot work 6.3.2, 11.6.2, 12.2.3.2, 13.2.4.1, 13.4.1, 13.4.4, 13.4.5.3
Definition 3.3.45
Housekeeping 11.4, 12.2.3.2, 13.2.6, A.11.4.5, A.11.4.8.1
Hydrants 13.2.8.2.4, 13.3.1.4, 13.6.1.3

-I-

Identification of historic elements ..... 7.3.1, A.7.3.1.2 to A.7.3.1.6
Ignition sources
Construction 12.2.3.2, 13.2.5
Small 9.5.3.6.1, 9.5.3.6.2
Impairments 13.1.3, 13.6.4.3, 14.4, A.9.5.3.9
Definition 3.3.46
Emergency 14.4.1, 14.4.3
Definition 3.3.46.1
Preplanned 14.4.2, 14.4.3
Definition 3.3.46.2
Procedures 14.4.3
Restoring systems to service 14.4.4
Incapacitation (definition) 3.3.47
Initiating devices (definition) 3.3.48
Input data specifications ..... 9.4.2.2, 9.4.2.3, 9.5.4, 9.6.3, 9.8.7, A.9.6.3.3.
Definition 3.3.49
Inspection, testing, and maintenance ..... Chap. 14, A.10.2.1; *see also* Housekeeping
Design features 9.1.7, A.9.1.7
Fire protection system maintenance checklist ..... Annex K
Fire safety inspection forms ..... Annex J
Records 10.8.3
Interior construction 7.3.1.6, A.7.3.1.6
Interior finish ..... 8.2(2), 9.5.3.3.2, 12.8

-K-

Kitchens ..... *see* Cooking equipment

Copyright National Fire Protection Association
Provided by IHS under license with NFPA
No reproduction or networking permitted without license from IHS
Not for Resale

-L-

Labeled (definition) 3.2.4
Libraries 1.1.2, 1.3.4, A.1.1.2, A.9.5.3.2
Definition 3.3.50
Life safety 7.3.3.1.3, A.7.3.3.1.3, A.10.2.1
Compliance to code, options for 1.5.1
Goal of code ..... 4.2.1, 4.2(1)
Objectives of code 4.3.1
Performance-based design 9.2.1, 9.2.2.1, 9.5.3.1.1, 9.7, 9.8.9, A.9.2.2.1, A.9.7
Lightning protection 12.9
Limited-combustible material ..... 8.2(1)
Definition 3.3.51, A.3.3.51
Listed (definition) 3.2.5, A.3.2.5
Lockbox 11.11.2
Locking devices, delayed egress 6.2
LP-Gas ..... 13.4.3.6.2 to 13.4.3.6.7

-M-

Maintenance .....*see* Inspection, testing, and maintenance
Management operational systems ... 1.5.4, 4.3.1.3, 8.2(10), Chap. 10; *see also* Fire safety management plan
Enforcement 10.10
Fire emergency response plan 10.5, A.10.5.1
Opening and closing of building, procedures for 10.12, A.10.12
Operational requirements 10.4
Periodic compliance audit 10.9, A.10.9
Record keeping 10.8
Responsibility/authority 10.2, A.10.2
Training 10.5.5
Manual fire-fighting capability .....*see* Fire suppression, manual
Means of egress 4.3.1.1, 9.3.2, 9.5.3.3.1, A.9.3.2, A.9.5.1, A.9.5.3.3, A.10.12
Definition 3.3.52
Electrical wiring across 11.7.1
Evaluation of 7.3.3.4
Maintenance of 11.4.1
Special events 15.3, A.15.3.3, A.15.3.4
Means of escape (definition) 3.3.53
Mechanical rooms 11.4.3
Museums 1.1.2, 1.3.4, A.1.1.2, A.4.2.2, A.9.5.3.2, A.9.5.3.9
Definition 3.3.54

-N-

NFPA code adoption ..... Annex M
Noncombustible materials ..... 8.2(1), 15.7.2
Definition 3.3.55
Notification appliances 15.3.3
Definition 3.3.56

-O-

Objectives 4.1, 4.3, 9.1.2, 9.1.6, A.4.3
Definition 3.3.57, A.3.3.57
Occupancy
Changes in classification A.7.3
Definition 3.3.58
Occupant characteristics ..... 9.4.5, 9.5.3.2, A.9.4.5.1 to A.9.4.5.5, A.9.5.3.3 to A.9.5.3.9
Definition 3.3.59
Occupant load
Definition 3.3.60
Special events 15.2
Off-site conditions, performance-based option 9.4.8
Open flame use 11.6, 13.4.4
Opening of building, procedures for 10.12, A.10.12
Operational controls ..... 10.4.1 to 10.4.3
Operational systems .....*see* Management operational systems
Output data 9.8.8

-P-

Packing materials 11.4.8, A.11.4.8.1
Paint stripping 13.4.6.1
Performance-based design approach ..... 1.5.1, 1.5.3, 7.4.2, Chap. 9
Assumptions 9.4.2, 9.4.9, A.9.4.9
Code compliance ..... Annex G
Definition 3.3.61, A.3.3.61
Designer, qualifications of 9.1.3, A.9.1.3
Design fire scenarios ..... 9.2.1.2, 9.5, A.9.2.2.2, A.9.5.1 to A.9.5.3.9.2
Design specifications ..... 9.4, A.9.4.1 to A.9.4.10
Documentation requirements ..... 9.8, A.9.8.1 to A.9.8.11
Emergency response personnel 9.4.6
Evaluation of design ..... 9.6, A.9.6.1 to A.9.6.4
Fire protection systems 13.1.1.1
Goals and objectives 9.1.2, 9.1.6, 9.1.7.1
Independent review 9.1.4, A.9.1.4
Maintenance of design features 9.1.7, A.9.1.7
Management operational systems 10.1.1
Off-site conditions 9.4.8
Operational requirements 10.4.1
Performance criteria 9.2, 9.8.4, A.9.2.2.1, A.9.2.2.2
Post-construction conditions 9.4.7, A.9.4.7
Retained prescriptive requirements 9.3, 9.8.10, A.9.3.1, A.9.3.2
Safety factors 9.7, A.9.7
Selecting 7.5.1, 7.5.1.2, 7.5.3, A.7.5.1
Sources of data 9.1.5
Special provisions 9.4.10, A.9.4.10
Use of 9.8.13
Performance criteria 9.2, 9.6.2, 9.8.4, A.9.2.2.1, A.9.2.2.2
Definition 3.3.62
Places of worship 1.1.2, 1.3.4, A.1.1.2
Definition 3.3.63
Plans
Correction, plan of 7.4.2
Damage limitation plan A.10.2.1
Definition 3.3.16
Fire emergency response 10.5, 10.8.3, A.10.2.1, A.10.5.1
Fire protection plan 6.1.3, 12.10.5
Fire safety .....*see* Fire safety management plan
Floor plans 7.3.1.6, A.7.3.1.6
Planning and design appraisal ..... Annex B
Plastic sheeting, use of 13.2.3.1, 13.2.3.2
Plumbing 13.4.4
Preplanned impairments .....*see* Impairments
Prescriptive-based document (definition) 3.3.64, A.3.3.64
Prescriptive-based option ..... 1.5.1, 1.5.2, Chap. 8
Alternatives 8.1.2, A.8.1.2
Compensatory features 8.2, A.8.2
Compliance 7.4.2
Equivalency 8.1.3, 8.2, A.8.1.3, A.8.2
Management operational systems 10.1.1
Modification of requirements 8.1.4, 8.2, A.8.1.4, A.8.2
Operational requirements 10.4.1
Performance-based option, prescriptive requirements in 9.3, 9.8.10, A.9.3.1, A.9.3.2
Selection of 7.5.1.2, 7.5.2
Preservation (definition) ..... 3.3.65; *see also* Historic preservation
Prioritization of historic elements, spaces, and features 7.3.2
Private (definition) 3.3.66
Process of code application ..... Chap. 7
Approval 7.8
Assessment ..... 7.3, A.7.3; *see also* Building survey
Design review 7.6
Initial compliance audit 7.7
Options 7.4
Appraisal and selection 7.5, 7.5.1, A.7.5.1
Periodic compliance audit 7.4.1, 7.9
Team, process 7.2, A.7.2
Process team 7.2, 7.5.1.1, 7.6, 10.4.1, A.7.2
Definition 3.3.67

Copyright National Fire Protection Association
Provided by IHS under license with NFPA
No reproduction or networking permitted without license from IHS
Not for Resale

Proposed design (definition) ..... 3.3.68, A.3.3.68; *see also* Performance-based design approach
Protected premises (definition) .... 3.3.69; *see also* Fire alarm systems; Fire protection systems
Protected systems, equipment, or apparatus (definition) ..... 3.3.71; *see also* Fire protection systems; Sprinkler systems; Standpipe and hose systems
Protection (definition) ..... 3.3.70, A.3.3.70; *see also* Fire protection and prevention
Public (definition) 3.3.72
Purpose of code 1.2, A.1.2

-R-

Record keeping .....*see* Documentation
References ..... Chap. 2, Annex Q
Regulations, compliance with ..... 7.3.3.1, A.7.3.3.1.3; *see also* Code
Rehabilitation (definition) 3.3.73
Renovations ..... Chap. 12
Resources for protection of cultural resource property projects ..... Annex E
Restoration (definition) 3.3.74
Risk indexing compliance 7.4.2
Roof coverings 12.5
Roofing operations 13.4.3

-S-

Safe location (definition) 3.3.75
Safety factors ..... 9.7, 9.8.9, A.9.7, Annex L
Definition 3.3.76
Safety margins 9.6.2
Definition 3.3.77
Scenario
Design fire ..... 9.2.1.2, 9.5, 9.8.6, A.9.2.2.2, A.9.5.1 to A.9.5.3.9.2
Definition 3.3.78.1
Fire (definition) 3.3.78.2, A.3.3.78.2
Scope of code 1.1, A.1.1.2
Secretary of Interior standards ..... Annex N
Security ..... Chap. 6, 11.11, 12.2.3.2, A.10.12
During construction 13.7
Self-closing A.9.5.3.9
Definition 3.3.79
Sensitivity analysis ..... 9.4.2.2, 9.5.4.2, 9.5.4.3, 9.8.7, 9.8.8, Annex L
Definition 3.3.80
Separation .....*see also* Barriers, Fire
Construction areas 13.4.5.4
Definition 3.3.81
Of hazardous areas 12.7
Shall (definition) 3.2.6
Should (definition) 3.2.7
Smoke barriers .....*see* Barriers, Smoke
Smoke detectors ... 12.3.4, 12.4.2.1, 12.4.2.2, 13.2.8.1.2 to 13.2.8.1.4
Definition 3.3.82
Smoke management system, nonoperational A.9.5.3.9
Smoking 11.5, 13.2.4, 15.5, A.10.12
Spaces, individual
Identification of 7.3.1.6, A.7.3.1.6
Prioritization of 7.3.2
Special events ..... 9.8.13, 10.5.5, 10.9.2, Chap. 15
Definition 3.3.83, A.3.3.83
Spontaneous heating 11.4.5, A.11.4.5
Sprinkler systems 11.4.9.3, 12.2.3.2, 12.4.2.1, 12.4.3, 13.2.8.2.3, 13.2.8.2.4
Definition 3.3.86.3
Inspection, testing, and maintenance ..... Table 14.3.1
Shut off A.9.5.3.9
Staff ..... 9.4.5.5, 10.2.2, 15.3.4, A.9.4.5.5, A.15.3.4; *see also* Training
Stairways ..... 7.3.3.4.2, 8.2(5), 12.3.3, 13.6.1.6
Stakeholder (definition) 3.3.84
Standard .....*see also* Equivalency
Compliance with .....*see* Compliance
Definition 3.2.8
Prescriptive-based document (definition) ..... 3.3.64; *see also* Prescriptive-based option
Standpipe and hose systems ... 12.4.6, 13.2.8.2.2 to 13.2.8.2.4, 13.6.3
Storage
In attics and crawl spaces 11.4.2
Of construction materials 13.3.2.2
Of flammable and combustible liquids 11.4.6, 11.4.7
Stoves 11.6.4, 14.6
Structures .....*see also* Buildings
Adjacent 7.3.1.4
Definition 3.3.85, A.3.3.85
Historic (definition) 3.3.44
Supervision, construction .....*see* Construction
Survey .....*see* Building survey
Systems .....*see* Building systems; Fire alarm systems; Fire protection systems; Sprinkler systems

-T-

Tarpaulins, use of 13.2.3.1, 13.2.3.2
Telephone closets 11.4.3
Temporary construction 13.3, 15.8.1
Temporary exhibits 10.5.5
Temporary heating equipment 13.4.2
Tents 15.7.1
Testing .....*see* Inspection, testing, and maintenance
Thermal barriers (definition) 3.3.6.3, A.3.3.6.3
Timber panel door standard, BSI ..... Annex P
Training 9.4.5.5, 10.5.5, 10.6, 10.8.3, 14.2.3, A.9.4.5.5, A.9.5.1
Trash disposal 11.4.9, 12.2.3.2, 13.2.6, A.10.12

-U-

Uncertainty analysis ..... 9.6.2, 9.6.3.3, A.9.6.3.3, Annex L
Definition 3.3.87
Untenable conditions, methods to determine ..... Annex H

-V-

Vegetation, combustible 11.2.3, 12.10.1
Ventilation systems 11.9
Verification method (definition) 3.3.88
Vertical openings ..... 8.2(5)
Definition 3.3.89

-W-

Walls
Fire .....*see* Fire walls
Fire-rated ..... 8.2(4)
Water control, fire fighting operations 12.11
Water mist systems ..... Table 12.4.4.2, Table 14.3.1
Water spray systems ..... Table 12.4.4.2
Water supply 13.4.8, 13.6.2, A.9.5.3.9
Wet chemical extinguishing systems ..... Table 12.4.4.2, Table 14.3.1
Wildland fires, protection from 12.10

-Z-

Zone (definition) 3.3.90

Copyright National Fire Protection Association
Provided by IHS under license with NFPA
No reproduction or networking permitted without license from IHS
Not for Resale

Sequence of Events Leading to Issuance of an NFPA Committee Document

Step 1: Call for Proposals

- Proposed new Document or new edition of an existing Document is entered into one of two yearly revision cycles, and a Call for Proposals is published.

Step 2: Report on Proposals (ROP)

- Committee meets to act on Proposals, to develop its own Proposals, and to prepare its Report.
- Committee votes by written ballot on Proposals. If two-thirds approve, Report goes forward. Lacking two-thirds approval, Report returns to Committee.
- Report on Proposals (ROP) is published for public review and comment.

Step 3: Report on Comments (ROC)

- Committee meets to act on Public Comments to develop its own Comments, and to prepare its report.
- Committee votes by written ballot on Comments. If two-thirds approve, Report goes forward. Lacking two-thirds approval, Report returns to Committee.
- Report on Comments (ROC) is published for public review.

Step 4: Technical Report Session

- "*Notices of intent to make a motion"* are filed, are reviewed, and valid motions are certified for presentation at the Technical Report Session. ("Consent Documents" that have no certified motions bypass the Technical Report Session and proceed to the Standards Council for issuance.)
- NFPA membership meets each June at the Annual Meeting Technical Report Session and acts on Technical Committee Reports (ROP and ROC) for Documents with "certified amending motions."
- Committee(s) vote on any amendments to Report approved at NFPA Annual Membership Meeting.

Step 5: Standards Council Issuance

- Notification of intent to file an appeal to the Standards Council on Association action must be filed within 20 days of the NFPA Annual Membership Meeting.
- Standards Council decides, based on all evidence, whether or not to issue Document or to take other action, including hearing any appeals.

Committee Membership Classifications

The following classifications apply to Technical Committee members and represent their principal interest in the activity of the committee.

M *Manufacturer:* A representative of a maker or marketer of a product, assembly, or system, or portion thereof, that is affected by the standard.

U *User:* A representative of an entity that is subject to the provisions of the standard or that voluntarily uses the standard.

I/M *Installer/Maintainer:* A representative of an entity that is in the business of installing or maintaining a product, assembly, or system affected by the standard.

L *Labor:* A labor representative or employee concerned with safety in the workplace.

R/T *Applied Research/Testing Laboratory:* A representative of an independent testing laboratory or independent applied research organization that promulgates and/or enforces standards.

E *Enforcing Authority:* A representative of an agency or an organization that promulgates and/or enforces standards.

I *Insurance:* A representative of an insurance company, broker, agent, bureau, or inspection agency.

C *Consumer:* A person who is, or represents, the ultimate purchaser of a product, system, or service affected by the standard, but who is not included in the *User* classification.

SE *Special Expert:* A person not representing any of the previous classifications, but who has a special expertise in the scope of the standard or portion thereof.

NOTES;
1. "Standard" connotes code, standard, recommended practice, or guide.
2. A representative includes an employee.
3. While these classifications will be used by the Standards Council to achieve a balance for Technical Committees, the Standards Council may determine that new classifications of members or unique interests need representation in order to foster the best possible committee deliberations on any project. In this connection, the Standards Council may make appointments as it deems appropriate in the public interest, such as the classification of "Utilities" in the National Electrical Code Committee.
4. Representatives of subsidiaries of any group are generally considered to have the same classification as the parent organization.

Copyright National Fire Protection Association
Provided by IHS under license with NFPA
No reproduction or networking permitted without license from IHS
Not for Resale

NFPA Technical Committee Document Proposal Form

NOTE: All Proposals must be received by 5:00 p.m. EST/EDST on the published Proposal Closing Date.

For further information on the standards-making process, please contact the Codes and Standards Administration at 617-984-7249.

For technical assistance, please call NFPA at 617-770-3000.

FOR OFFICE USE ONLY

Log #:

Date Rec'd:

Please indicate in which format you wish to receive your ROP/ROC ☐ **electronic** ☐ **paper** ☒ **download**
(Note: If choosing the download option, you must view the ROP/ROC from our website; no copy will be sent to you.)

Date April 1, 200X **Name** John J. Doe **Tel. No.** 716-555-1234

Company Air Canada Pilot's Association

Street Address 123 Summer Street Lane **City** Lewiston **State** NY **Zip** 14092

Please indicate organization represented (if any)

1. (a) NFPA Document Title National Fuel Gas Code **NFPA No. & Year** 54, 200X Edition

(**b) Section/Paragraph** 3.3

2. Proposal Recommends (check one): ☐ new text ☒ revised text ☐ deleted text

3. Proposal (include proposed new or revised wording, or identification of wording to be deleted): [Note: Proposed text should be in legislative format, i.e., use underscore to denote wording to be inserted (inserted wording) and strike-through to denote wording to be deleted (~~deleted wording~~).]

Revise definition of effective ground-fault current path to read:

3.3.78 Effective Ground-Fault Current Path. An intentionally constructed, permanent, low impedance electrically conductive path designed and intended to carry ~~underground~~ electric fault current ~~conditions~~ from the point of a ground fault on a wiring system to the electrical supply source.

4. Statement of Problem and Substantiation for Proposal: (Note: State the problem that would be resolved by your recommendation; give the specific reason for your Proposal, including copies of tests, research papers, fire experience, etc. If more than 200 words, it may be abstracted for publication.)

Change uses proper electrical terms.

5. Copyright Assignment

(a) ☐ **I am the author of the text or other material (such as illustrations, graphs) proposed in this Proposal.**

(b) ☒ **Some or all of the text or other material proposed in this Proposal was not authored by me. Its source is as follows** (please identify which material and provide complete information on its source)**:**

ABC Co.

I hereby grant and assign to NFPA all and full rights in copyright in this Proposal and understand that I acquire no rights in any publication of NFPA in which this Proposal in this or another similar or analogous form is used. Except to the extent that I do not have authority to make an assignment in materials that I have identified in (b) above, I hereby warrant that I am the author of this Proposal and that I have full power and authority to enter into this assignment.

Signature (Required)

PLEASE USE SEPARATE FORM FOR EACH PROPOSAL • NFPA Fax: (617) 770-3500

Mail to: Secretary, Standards Council, National Fire Protection Association, 1 Batterymarch Park, Quincy, MA 02169-7471

8/29/2006

SAMPLE

Copyright National Fire Protection Association
Provided by IHS under license with NFPA
No reproduction or networking permitted without license from IHS
Not for Resale

NFPA Technical Committee Document Proposal Form

NOTE: All Proposals must be received by 5:00 p.m. EST/EDST on the published Proposal Closing Date.

For further information on the standards-making process, please contact the Codes and Standards Administration at 617-984-7249.

For technical assistance, please call NFPA at 617-770-3000.

FOR OFFICE USE ONLY

Log #: _____

Date Rec'd: _____

Please indicate in which format you wish to receive your ROP/ROC ☐ electronic ☐ paper ☐ download
(Note: If choosing the download option, you must view the ROP/ROC from our website; no copy will be sent to you.)

Date _____ **Name** _____ **Tel. No.** _____

Company _____

Street Address _____ **City** _____ **State** _____ **Zip** _____

Please indicate organization represented (if any) _____

1. (a) NFPA Document Title _____ **NFPA No. & Year** _____

(b) Section/Paragraph _____

2. Proposal Recommends (check one): ☐ new text ☐ revised text ☐ deleted text

3. Proposal (include proposed new or revised wording, or identification of wording to be deleted): [Note: Proposed text should be in legislative format, i.e., use underscore to denote wording to be inserted (inserted wording) and strike-through to denote wording to be deleted (~~deleted wording~~).]

4. Statement of Problem and Substantiation for Proposal: (Note: State the problem that would be resolved by your recommendation; give the specific reason for your Proposal, including copies of tests, research papers, fire experience, etc. If more than 200 words, it may be abstracted for publication.)

5. Copyright Assignment

(a) ☐ I am the author of the text or other material (such as illustrations, graphs) proposed in this Proposal.

(b) ☐ Some or all of the text or other material proposed in this Proposal was not authored by me. Its source is as follows (please identify which material and provide complete information on its source)**:**

_____

I hereby grant and assign to NFPA all and full rights in copyright in this Proposal and understand that I acquire no rights in any publication of NFPA in which this Proposal in this or another similar or analogous form is used. Except to the extent that I do not have authority to make an assignment in materials that I have identified in (b) above, I hereby warrant that I am the author of this Proposal and that I have full power and authority to enter into this assignment.

Signature (Required) _____

PLEASE USE SEPARATE FORM FOR EACH PROPOSAL • NFPA Fax: (617) 770-3500

Mail to: Secretary, Standards Council, National Fire Protection Association, 1 Batterymarch Park, Quincy, MA 02169-7471

8/29/2006

Copyright National Fire Protection Association
Provided by IHS under license with NFPA
No reproduction or networking permitted without license from IHS
Not for Resale