# NFPA 91

# Standard for Exhaust Systems for Air Conveying of Vapors, Gases, Mists, and Noncombustible Particulate Solids

## 2004 Edition

NFPA, 1 Batterymarch Park, Quincy, MA 02169-7471
An International Codes and Standards Organization

--`,,`,,`-`-`,,`,,`,`,,`---
Copyright National Fire Protection Association
Provided by IHS under license with NFPA
No reproduction or networking permitted without license from IHS
Not for Resale

## IMPORTANT NOTICES AND DISCLAIMERS CONCERNING NFPA DOCUMENTS

### NOTICE AND DISCLAIMER OF LIABILITY CONCERNING THE USE OF NFPA DOCUMENTS

NFPA codes, standards, recommended practices, and guides, of which the document contained herein is one, are developed through a consensus standards development process approved by the American National Standards Institute. This process brings together volunteers representing varied viewpoints and interests to achieve consensus on fire and other safety issues. While the NFPA administers the process and establishes rules to promote fairness in the development of consensus, it does not independently test, evaluate, or verify the accuracy of any information or the soundness of any judgments contained in its codes and standards.

The NFPA disclaims liability for any personal injury, property or other damages of any nature whatsoever, whether special, indirect, consequential or compensatory, directly or indirectly resulting from the publication, use of, or reliance on this document. The NFPA also makes no guaranty or warranty as to the accuracy or completeness of any information published herein.

In issuing and making this document available, the NFPA is not undertaking to render professional or other services for or on behalf of any person or entity. Nor is the NFPA undertaking to perform any duty owed by any person or entity to someone else. Anyone using this document should rely on his or her own independent judgment or, as appropriate, seek the advice of a competent professional in determining the exercise of reasonable care in any given circumstances.

The NFPA has no power, nor does it undertake, to police or enforce compliance with the contents of this document. Nor does the NFPA list, certify, test or inspect products, designs, or installations for compliance with this document. Any certification or other statement of compliance with the requirements of this document shall not be attributable to the NFPA and is solely the responsibility of the certifier or maker of the statement.

Copyright National Fire Protection Association
Provided by IHS under license with NFPA
No reproduction or networking permitted without license from IHS
Not for Resale

## ADDITIONAL NOTICES AND DISCLAIMERS

### Updating of NFPA Documents

Users of NFPA codes, standards, recommended practices, and guides should be aware that these documents may be superseded at any time by the issuance of new editions or may be amended from time to time through the issuance of Tentative Interim Amendments. An official NFPA document at any point in time consists of the current edition of the document together with any Tentative Interim Amendments and any Errata then in effect. In order to determine whether a given document is the current edition and whether it has been amended through the issuance of Tentative Interim Amendments or corrected through the issuance of Errata, consult appropriate NFPA publications such as the National Fire Codes® Subscription Service, visit the NFPA website at www.nfpa.org, or contact the NFPA at the address listed below.

### Interpretations of NFPA Documents

A statement, written or oral, that is not processed in accordance with Section 6 of the Regulations Governing Committee Projects shall not be considered the official position of NFPA or any of its Committees and shall not be considered to be, nor be relied upon as, a Formal Interpretation.

### Patents

The NFPA does not take any position with respect to the validity of any patent rights asserted in connection with any items which are mentioned in or are the subject of NFPA codes, standards, recommended practices, and guides, and the NFPA disclaims liability for the infringement of any patent resulting from the use of or reliance on these documents. Users of these documents are expressly advised that determination of the validity of any such patent rights, and the risk of infringement of such rights, is entirely their own responsibility.

NFPA adheres to applicable policies of the American National Standards Institute with respect to patents. For further information contact the NFPA at the address listed below.

### Law and Regulations

Users of these documents should consult applicable federal, state, and local laws and regulations. NFPA does not, by the publication of its codes, standards, recommended practices, and guides, intend to urge action that is not in compliance with applicable laws, and these documents may not be construed as doing so.

### Copyrights

This document is copyrighted by the NFPA. It is made available for a wide variety of both public and private uses. These include both use, by reference, in laws and regulations, and use in private self-regulation, standardization, and the promotion of safe practices and methods. By making this document available for use and adoption by public authorities and private users, the NFPA does not waive any rights in copyright to this document.

Use of NFPA documents for regulatory purposes should be accomplished through adoption by reference. The term “adoption by reference” means the citing of title, edition, and publishing information only. Any deletions, additions, and changes desired by the adopting authority should be noted separately in the adopting instrument. In order to assist NFPA in following the uses made of its documents, adopting authorities are requested to notify the NFPA (Attention: Secretary, Standards Council) in writing of such use. For technical assistance and questions concerning adoption of NFPA documents, contact NFPA at the address below.

### For Further Information

All questions or other communications relating to NFPA codes, standards, recommended practices, and guides and all requests for information on NFPA procedures governing its codes and standards development process, including information on the procedures for requesting Formal Interpretations, for proposing Tentative Interim Amendments, and for proposing revisions to NFPA documents during regular revision cycles, should be sent to NFPA headquarters, addressed to the attention of the Secretary, Standards Council, NFPA, 1 Batterymarch Park, P.O. Box 9101, Quincy, MA 02269-9101.

For more information about NFPA, visit the NFPA website at www.nfpa.org.

--`,,`,,`,`,,`---

Copyright National Fire Protection Association
Provided by IHS under license with NFPA
No reproduction or networking permitted without license from IHS

Not for Resale

Copyright © 2004, National Fire Protection Association, All Rights Reserved

**NFPA 91**

**Standard for**

# Exhaust Systems for Air Conveying of Vapors, Gases, Mists, and Noncombustible Particulate Solids

**2004 Edition**

This edition of NFPA 91, *Standard for Exhaust Systems for Air Conveying of Vapors, Gases, Mists, and Noncombustible Particulate Solids*, was prepared by the Technical Committee on Handling and Conveying of Dusts, Vapors, and Gases and acted on by NFPA at its May Association Technical Meeting held May 23–26, 2004, in Salt Lake City, UT. It was issued by the Standards Council on July 16, 2004, with an effective date of August 5, 2004, and supersedes all previous editions.

This edition of NFPA 91 was approved as an American National Standard on August 5, 2004.

## Origin and Development of NFPA 91

The National Fire Protection Association as early as 1899 recognized the hazards of blower and exhaust systems. Since 1900, the NFPA Committee on Blower Systems has given continuing attention to the subject. Following World War II, revisions and additions to the standard were recommended by the NFPA Committee on Blower Systems to cover various new developments in the protection of dust collecting systems and stock and refuse conveying systems, and were adopted by the NFPA at its Annual Meetings in 1946, 1947, 1948, and 1949. Editorially revised editions were published in 1959 and 1961. In 1972, Section 200 (Chapter 2) was expanded, and a new Section 500 (Chapter 5), covering systems involving plastic materials, was added. In the 1973 edition, Section 400 (Chapter 4) was completely revised. The 1983 edition was completely updated to conform with the NFPA *Manual of Style* and incorporated minor revisions in each chapter.

The 1990 edition included minor revisions to Chapter 2 including a new Figure 2-8 and Table 2-8(b). Changes were made to recognize NFPA 45, *Standard on Fire Protection for Laboratories Using Chemicals*, and to remove conflicts with that standard. These changes included moving Section 5-2 and Figures 5-2 through 5-5 to Appendix A.

The Technical Committee on Blower Systems completely revised the standard for the 1992 edition, including a new title and new scope. The previous title was *Standard for the Installation of Blower and Exhaust Systems for Dust, Stock, and Vapor Removal or Conveying*. Chapters 3 and 4 from the 1990 edition were deleted with some requirements from those chapters included in the revised and reorganized Chapter 2 and new Chapters 5, 6, and 7.

Minor changes were made to all chapters in the 1995 edition. The Committee clarified their intent that ducts can be round, oval, or rectangular. A new figure was added to show access openings for different shapes of ducts, and a new table was added in the appendix to show duct velocities for types of materials conveyed.

The 1999 edition incorporated a new scope limiting the applicability of this document to noncombustible particulate solids. The Committee on Handling and Conveying of Dusts, Vapors, and Gases became responsible for NFPA 91 and made changes consistent with the committee's other documents, NFPA 650, *Standard for Pneumatic Conveying Systems for Handling Combustible Particulate Solids*, and NFPA 654, *Standard for the Prevention of Fire and Dust Explosions from the Manufacturing, Processing, and Handling of Combustible Particulate Solids*, that address combustible particulate solids.

In the 2004 revision, the Committee has completed changes according to the NFPA *Manual of Style*. The conditions under which flammable concentrations can exceed 25 percent of the lower flammable limit have been expanded to match provisions in other NFPA documents. The design requirements for duct hanging and bracing and fire protection requirements for ducting have also been updated.

Copyright National Fire Protection Association
Provided by IHS under license with NFPA
No reproduction or networking permitted without license from IHS
Not for Resale

## Technical Committee on Handling and Conveying of Dusts, Vapors, and Gases

**Walter L. Frank,** *Chair*
ABS Consulting Group, DE [SE]

**Joe R. Barton,** Fountaintown, IN [U]
**Paul A. Cera,** Aon Risk Services, CT [I]
**John M. Cholin,** J. M. Cholin Consultants Inc., NJ [SE]
**David G. Clark,** E. I. du Pont de Nemours & Company, DE [U]
**C. James Dahn,** Safety Consulting Engineers, Inc., IL [SE]
**Vahid Ebadat,** Chilworth Technology Inc., NJ [SE]
**Henry L. Febo, Jr.,** FM Global Research, MA [I]
Rep. FM Global/FM Research
**Henry W. Garzia,** Kidde-Fenwal, Inc., MA [M]
**Joseph P. Gillis,** Westboro, MA [SE]
**Dan A. Guaricci,** ATEX Explosion Protection L.P., FL [M]
**Ray Hunter,** Ray Hunter & Associates Inc., AL [M]
Rep. American Air Filter
**Jerry J. Jennett,** Georgia Gulf Sulfur Corporation, GA [M]
**David C. Kirby,** Baker Engineering & Risk Consultants, WV [SE]
**James E. Maness,** JEM Safety Consulting, MO [U]
Rep. Grain Elevator and Processing Society
**Guillermo A. Navas,** Sheet Metal and Air Conditioning Contractors' National Association, VA [M]
Rep. Sheet Metal and Air Conditioning Contractors' National Association
**Robert W. Nelson,** Pocasset, MA [I]
Rep. GE Global Asset Protection Services
**James L. Roberts,** Fluor Enterprises, Inc., SC [SE]
**Richard F. Schwab,** Honeywell, Inc., NJ [U]
**Bill Stevenson,** Cv Technology, Inc., FL [M]
**Jeffrey J. Wanko,** DSM Nutritional Products, Inc., NJ [U]
**Harold H. Weber, Jr.,** The Sulphur Institute, DC [U]
(Vote Limited to NFPA 655)
**W. H. White,** White Consulting Services, OH [SE]
Rep. TC on Finishing Processes

**Alternates**

**Ted Brown,** International Sulphur, Inc., TX [M]
(Alt. to J. J. Jennett)
**Paul F. Hart,** GE Global Asset Protection Services, IL [I]
(Alt. to R. W. Nelson)
**Gregory I. Hurst,** National Starch & Chemical Company, IN [U]
(Alt. to J. R. Barton)
**Bernadette N. Reyes,** Safety Consulting Engineers, Inc., IL [SE]
(Alt. to C. J. Dahn)
**Samuel A. Rodgers,** Honeywell, Inc., VA [U]
(Alt. to R. F. Schwab)

**Nonvoting**

**Harry Verakis,** U.S. Department of Labor, WV

**Guy R. Colonna,** NFPA Staff Liaison

*This list represents the membership at the time the Committee was balloted on the final text of this edition. Since that time, changes in the membership may have occurred. A key to classifications is found at the back of the document.*

NOTE: Membership on a committee shall not in and of itself constitute an endorsement of the Association or any document developed by the committee on which the member serves.

**Committee Scope:** This Committee shall have primary responsibility for documents on the prevention, control, and extinguishment of fires and explosions in the design, construction, installation, operation, and maintenance of facilities and systems processing or conveying flammable or combustible dusts, gases, vapors, and mists.



Copyright National Fire Protection Association
Provided by IHS under license with NFPA
No reproduction or networking permitted without license from IHS
Not for Resale

## Contents

**Chapter 1 Administration** ..... **91–** 4
1.1 Scope ..... **91–** 4
1.2 Purpose ..... **91–** 4
1.3 Retroactivity ..... **91–** 4
1.4 Equivalency ..... **91–** 4

**Chapter 2 Referenced Publications** ..... **91–** 4
2.1 General ..... **91–** 4
2.2 NFPA Publications ..... **91–** 4
2.3 Other Publications ..... **91–** 4

**Chapter 3 Definitions** ..... **91–** 4
3.1 General ..... **91–** 4
3.2 NFPA Official Definitions ..... **91–** 4
3.3 General Definitions ..... **91–** 5

**Chapter 4 Design and Construction** ..... **91–** 5
4.1 General Requirements ..... **91–** 5
4.2 Duct Material and Construction ..... **91–** 6
4.3 Access ..... **91–** 6
4.4 Design Requirements ..... **91–** 6
4.5 Hangers and Supports ..... **91–** 7
4.6 Duct Installation ..... **91–** 7

**Chapter 5 Corrosive Materials** ..... **91–** 8
5.1 General ..... **91–** 8

**Chapter 6 Air-Moving Devices** ..... **91–** 8
6.1 General ..... **91–** 8
6.2 Flammable or Combustible Materials ..... **91–** 8
6.3 Clearance ..... **91–** 8
6.4 Alignment ..... **91–** 9
6.5 Maintenance and Inspection ..... **91–** 9
6.6 Location ..... **91–** 9
6.7 Flexible Connections ..... **91–** 9

**Chapter 7 Ignition Sources** ..... **91–** 9
7.1 Electrical Equipment ..... **91–** 9
7.2 Static Electricity ..... **91–** 9
7.3 Manifolds ..... **91–** 9
7.4 Open Flames and Sparks ..... **91–** 9
7.5 Removal of Ferrous Materials ..... **91–** 9
7.6 Belt Drives ..... **91–** 9
7.7 Bearings ..... **91–** 9
7.8 Equipment ..... **91–** 9

**Chapter 8 Fire Protection** ..... **91–** 9
8.1 General ..... **91–** 9
8.2 Drainage ..... **91–** 9
8.3 Testing and Inspection ..... **91–** 9

**Chapter 9 Testing and Maintenance** ..... **91–** 9
9.1 General ..... **91–** 9
9.2 System Test ..... **91–** 9
9.3 System Inspection ..... **91–**10
9.4 Cleanliness ..... **91–**10
9.5 Maintenance Program ..... **91–**10
9.6 Maintenance Log ..... **91–**10

**Annex A Explanatory Material** ..... **91–**10

**Annex B Informational References** ..... **91–**13

**Index** ..... **91–**14



Copyright National Fire Protection Association
Provided by IHS under license with NFPA
No reproduction or networking permitted without license from IHS
Not for Resale

**NFPA 91**

**Standard for**

# Exhaust Systems for Air Conveying of Vapors, Gases, Mists, and Noncombustible Particulate Solids

**2004 Edition**

***IMPORTANT NOTE: This NFPA document is made available for use subject to important notices and legal disclaimers. These notices and disclaimers appear in all publications containing this document and may be found under the heading "Important Notices and Disclaimers Concerning NFPA Documents." They can also be obtained on request from NFPA or viewed at www.nfpa.org/disclaimers.***

NOTICE: An asterisk (*) following the number or letter designating a paragraph indicates that explanatory material on the paragraph can be found in Annex A.

A reference in brackets [ ] following a section or paragraph indicates material that has been extracted from another NFPA document. As an aid to the user, the complete title and edition of the source documents for mandatory extracts are given in Chapter 2 and those for nonmandatory extracts are given in Annex B. Editorial changes to extracted material consist of revising references to an appropriate division in this document or the inclusion of the document number with the division number when the reference is to the original document. Requests for interpretations or revisions of extracted text shall be sent to the technical committee responsible for the source document.

Information on referenced publications can be found in Chapter 2 and Annex B.

## Chapter 1 Administration

**1.1* Scope.**

**1.1.1** This standard provides minimum requirements for the design, construction, installation, operation, testing, and maintenance of exhaust systems for air conveying of vapors, gases, mists, and noncombustible particulate solids except as modified or amplified by other applicable NFPA standards.

**1.1.2** This standard does not cover exhaust systems for conveying combustible particulate solids that are covered in other NFPA standards *(see A.1.1)*.

**1.2 Purpose.** The purpose of this standard is to provide technical requirements for exhaust systems that will achieve the following results:

(1) Provide safety to life and property from fires and explosions
(2) Minimize the damage in the event that such fires and explosions occur

**1.3 Retroactivity.** The provisions of this standard reflect a consensus of what is necessary to provide an acceptable degree of protection from the hazards addressed in this standard at the time the standard was issued.

**1.3.1** Unless otherwise specified, the provisions of this standard shall not apply to facilities, equipment, structures, or installations that existed or were approved for construction or installation prior to the effective date of the standard. Where specified, the provisions of this standard shall be retroactive.

**1.3.2** In those cases where the authority having jurisdiction determines that the existing situation presents an unacceptable degree of risk, the authority having jurisdiction shall be permitted to apply retroactively any portions of this standard deemed appropriate.

**1.3.3** The retroactive requirements of this standard shall be permitted to be modified if their application clearly would be impractical in the judgment of the authority having jurisdiction, and only where it is clearly evident that a reasonable degree of safety is provided.

**1.4 Equivalency.** Nothing in this standard is intended to prevent the use of systems, methods, or devices of equivalent or superior quality, strength, fire resistance, effectiveness, durability, and safety over those prescribed by this standard.

**1.4.1** Technical documentation shall be submitted to the authority having jurisdiction to demonstrate equivalency.

**1.4.2** The system, method, or device shall be approved for the intended purpose by the authority having jurisdiction.

## Chapter 2 Referenced Publications

**2.1 General.** The documents or portions thereof listed in this chapter are referenced within this standard and shall be considered part of the requirements of this document.

**2.2 NFPA Publications.** National Fire Protection Association, 1 Batterymarch Park, Quincy, MA 02169-7471.

NFPA 25, *Standard for the Inspection, Testing, and Maintenance of Water-Based Fire Protection Systems,* 2002 edition.

NFPA 51B, *Standard for Fire Prevention During Welding, Cutting, and Other Hot Work,* 2003 edition.

NFPA 69, *Standard on Explosion Prevention Systems,* 2002 edition.

NFPA 70, *National Electrical Code®,* 2005 edition.

NFPA 86, *Standard for Ovens and Furnaces,* 2003 edition.

NFPA 221, *Standard for Fire Walls and Fire Barrier Walls,* 2000 edition.

**2.3 Other Publications.**

**2.3.1 SMACNA Publications.** Sheet Metal and Air Conditioning Contractors' National Association, 4201 Lafayette Center Drive, Chantilly, VA 20151-1209.

*Accepted Industry Practice for Industrial Duct Construction,* 1975.

*Rectangular Industrial Duct Construction Standard,* 1980.

*Round Industrial Duct Construction Standard,* 1977.

*Thermoplastic Duct (PVC) Construction Manual,* 2nd edition, 1995.

*Thermoset FRP Duct Construction Manual,* 1997.

## Chapter 3 Definitions

**3.1 General.** The definitions contained in this chapter shall apply to the terms used in this standard. Where terms are not included, common usage of the terms shall apply.

**3.2 NFPA Official Definitions.**

**3.2.1* Approved.** Acceptable to the authority having jurisdiction.



Copyright National Fire Protection Association
Provided by IHS under license with NFPA
No reproduction or networking permitted without license from IHS
Not for Resale

**3.2.2* Authority Having Jurisdiction (AHJ).** An organization, office, or individual responsible for enforcing the requirements of a code or standard, or for approving equipment, materials, an installation, or a procedure.

**3.2.3 Labeled.** Equipment or materials to which has been attached a label, symbol, or other identifying mark of an organization that is acceptable to the authority having jurisdiction and concerned with product evaluation, that maintains periodic inspection of production of labeled equipment or materials, and by whose labeling the manufacturer indicates compliance with appropriate standards or performance in a specified manner.

**3.2.4* Listed.** Equipment, materials, or services included in a list published by an organization that is acceptable to the authority having jurisdiction and concerned with evaluation of products or services, that maintains periodic inspection of production of listed equipment or materials or periodic evaluation of services, and whose listing states that either the equipment, material, or service meets appropriate designated standards or has been tested and found suitable for a specified purpose.

**3.2.5 Shall.** Indicates a mandatory requirement.

**3.3 General Definitions.**

**3.3.1* Air-Moving Device.** A fan, blower, or other device that establishes an airflow by moving a volume of air per unit time.

**3.3.2 Duct.** Pipes, tubes, or other enclosures used for the purpose of pneumatically conveying materials.

**3.3.3* Exhaust System.** An air-conveying system for moving materials from a source to a point of discharge.

**3.3.4 Fire Barrier.** A continuous membrane, either vertical or horizontal, such as a wall or floor assembly, that is designed and constructed with a specified resistance rating to limit the spread of fire and that will also restrict the movement of smoke. Such barriers may have protected openings.

**3.3.5 Limited Combustible.** A building construction material not complying with the definition of noncombustible material that, in the form in which it is used, has a potential heat value not exceeding 8141 kJ/kg (3500 Btu/lb), where tested in accordance with NFPA 259, *Standard Test Method for Potential Heat of Building Materials*, and complies with (a) or (b): (a) materials having a structural base of noncombustible material, with a surface not exceeding a thickness of 3.2 mm (⅛ in.) that has a flame spread index not greater than 50; and (b) materials, in the form and thickness used, other than as described in (a), having neither a flame spread index greater than 25 nor evidence of continued progressive combustion and of such composition that surfaces that would be exposed by cutting through the material on any plane would have neither a flame spread index greater than 25 nor evidence of continued progressive combustion. (Materials subject to increase in combustibility or flame spread index beyond the limits herein established through the effects of age, moisture, or other atmospheric condition shall be considered combustible.) [**33:**3.3]

**3.3.6 Lower Flammable Limit (LFL).** That concentration of a combustible material in air below which ignition will not occur. Also known as the Lower Explosive Limit (LEL). Mixtures below this limit are said to be "too lean." [**329:**1.2]

**3.3.7* Noncombustible Material.** A material that, in the form in which it is used and under the conditions anticipated, will not ignite, burn, support combustion, or release flammable vapors when subjected to fire or heat.

**3.3.8* Noncombustible Particulate Solid.** Any noncombustible solid material composed of distinct particles or pieces, regardless of size, shape, or chemical composition.

## Chapter 4 Design and Construction

**4.1 General Requirements.**

**4.1.1** The design and installation of exhaust systems shall be the responsibility of persons having a knowledge of these systems.

**4.1.2*** Incompatible materials shall not be conveyed in the same system.

**4.1.3** Unless the circumstances stipulated in 4.1.3.1, 4.1.3.2, or 4.1.3.3 exist, in systems conveying flammable vapors, gases, or mists, the concentration shall not exceed 25 percent of the lower flammable limit (LFL).

**4.1.3.1** Higher concentrations shall be permitted if the exhaust system is designed and protected in accordance with NFPA 69, *Standard on Explosion Prevention Systems*, using one or more of the following techniques:

(1) Combustible concentration reduction
(2) Oxidant concentration reduction
(3) Deflagration suppression
(4) Deflagration pressure containment

**4.1.3.2** Higher concentrations shall be permitted for ovens and furnaces designed and protected in accordance with NFPA 86, *Standard for Ovens and Furnaces*.

**4.1.3.3*** Higher concentrations shall be permitted where deflagration venting is provided.

**4.1.4** The design of any exhaust system shall require knowledge of the physical and chemical properties and hazardous characteristics of the materials being conveyed.

**4.1.5*** Air-moving devices shall be sized to establish the velocity required to capture, control, and convey materials through the exhaust system.

**4.1.6** Operations generating flames, sparks, or hot material such as from grinding wheels and welding shall not be manifolded into any exhaust system that air conveys flammable or combustible materials.

**4.1.7 Magnetic Separations.**

**4.1.7.1** Exhaust systems designed to air convey flammable or combustible materials that can contain foreign ferrous materials shall have magnetic separators installed at those points where the ferrous materials enter the system.

**4.1.7.2** Where electromagnetic separators are used, they shall be listed.

**4.1.8* System Plans.**

**4.1.8.1** Plans and specifications for new systems and systems to be modified shall be submitted to the authority having jurisdiction for approval prior to installation or modification.

**4.1.8.2** The submittal shall provide information adequate to describe the hazard and to demonstrate safe performance of the system.



Copyright National Fire Protection Association
Provided by IHS under license with NFPA
No reproduction or networking permitted without license from IHS
Not for Resale

**4.1.9** Fire dampers shall be permitted to be installed in exhaust systems in the following situations:

(1) Where ducts pass through fire barriers
(2) Where a collection system installed on the end of the system is protected with an automatic extinguishing system
(3) Where the duct system is protected with an automatic extinguishing system
(4) Where ducts have been listed with interrupters
(5) Where necessary to facilitate the control of smoke pursuant to the applicable NFPA standards

**4.1.10** Fire dampers shall not be installed if the material being exhausted is toxic and if a risk evaluation indicates that the toxic hazard is greater than the fire hazard.

**4.1.11** Exhaust ducts shall not pass through fire walls, as defined by NFPA 221, *Standard for Fire Walls and Fire Barrier Walls*.

**4.1.12** Exhaust ducts passing through a fire barrier having a fire resistance rating of 2 hours or greater shall meet either of the following specifications:

(1) Wrapped or encased with listed or approved materials having a fire resistance rating equal to the fire barrier for 3 m (10 ft) of the duct on each side of the fire barrier including duct supports within this span
(2) Constructed of materials and supports having a minimum fire resistance rating equal to the fire barrier

**4.1.13** Exhaust ducts passing through fire barriers of any fire resistance rating shall be protected by sealing the space around the duct with listed or approved fire stopping having a fire resistance rating equal to the fire resistance rating of the fire barrier.

**4.1.14** Unless the circumstances stipulated in 4.1.14.1 or 4.1.14.2 exist, fire detection and alarm systems shall not be interlocked to shut down air-moving devices.

**4.1.14.1** Where shutdown is necessary for the effective operation of an automatic extinguishing system, it shall be permitted to interlock fire detection and alarm systems to shut down air-moving devices.

**4.1.14.2** Where a documented risk analysis acceptable to the authority having jurisdiction shows that the risk of damage from fire and the products of combustion would be higher with air-moving devices operating, it shall be permitted to interlock fire detection and alarm systems to shut down air-moving devices.

**4.2 Duct Material and Construction.**

**4.2.1** Unless the circumstances stipulated in 4.2.1.1 or 4.2.1.2 exist, duct material shall be noncombustible.

**4.2.1.1** Combustible duct material, when protected in accordance with Chapter 8, shall be permitted to be used when the material being conveyed is incompatible with noncombustible construction materials.

**4.2.1.2** Listed duct systems approved for use without automatic fire protection and not subject to combustible residue buildup shall be permitted to be used.

**4.2.2** The duct construction shall conform to the following applicable Sheet Metal and Air Conditioning Contractors' National Association (SMACNA) standards:

(1) *Accepted Industry Practice for Industrial Duct Construction*
(2) *Rectangular Industrial Duct Construction Standard*
(3) *Round Industrial Duct Construction Standard*
(4) *Thermoplastic Duct (PVC) Construction Manual*
(5) *Thermoset FRP Duct Construction Manual*

**4.2.3** Duct supports shall be designed to carry the weight of the duct system itself plus the anticipated weight of any conveyed materials.

**4.2.4** If sprinkler protection is provided inside the duct system, then the duct supports shall also be designed to carry the anticipated weight of any accumulation of sprinkler discharge.

**4.2.5** Laps in duct construction shall be in the direction of airflow.

**4.2.6 Condensate.**

**4.2.6.1** Joints in duct construction shall be liquidtight when the conveying system contains condensible vapors or liquids in suspension.

**4.2.6.2** Provisions shall be made for drainage of condensate at low points in the duct.

**4.3 Access.**

**4.3.1** Access doors shall be provided in horizontal ducts adjacent to elbows, junctions, and vertical ducts.

**4.3.2 Location.**

**4.3.2.1** Doors shall be located on the tops or sides of the ducts, and door spacing shall not exceed 3.6 m (12 ft).

**4.3.2.2** The requirement of 4.3.2.1 shall not apply to ducts handling materials that do not create a condition requiring access into the duct.

**4.3.3** Access doors shall be of the same material and of equal or greater thickness than the duct.

**4.3.4** Required openings or other penetrations shall be sealed, gasketed, or tightly fitted so that conveyed material does not escape.

**4.3.5*** Access openings shall be sized to satisfy their intended purpose.

**4.4 Design Requirements.**

**4.4.1** A means shall be provided for balancing the system.

**4.4.2** Balancing devices shall be secured to prevent inadvertent adjustment or loss of transport velocity.

**4.4.3** When dampers or louvers are used for weather or backdraft protection, they shall be located on the clean-air side of the filtration system.

**4.4.4*** Building components shall not be used as parts of a duct system.

**4.4.5*** Discharge shall terminate away from outside air intakes to prevent material from entering the air intakes.

**4.4.6 Hoods.**

**4.4.6.1** Materials shall be confined to and removed from the area where they are generated by hoods or enclosures and an air-moving device.

**4.4.6.2*** When it is not possible for the process to be enclosed or hoods installed, local exhaust ventilation shall be permitted.

**4.4.7** Duct liners that are combustible shall meet one of the following requirements:

(1) They shall be tested as part of a listed duct system that has been evaluated and found to be of low fire hazard not requiring automatic sprinkler protection to prevent fire spread.
(2) They shall have automatic sprinkler protection as required by Chapter 8.



Copyright National Fire Protection Association
Provided by IHS under license with NFPA
No reproduction or networking permitted without license from IHS
Not for Resale

**4.4.8** Additional branch ducts shall not be added to an existing system without redesign of the system.

**4.4.9** Branch ducts shall not be disconnected nor unused portions of the system be blanked off without provision for means to maintain required airflow.

**4.4.10** Flexible ducts shall be permitted to be used only at inlets where movability or portability is required.

**4.5 Hangers and Supports.**

**4.5.1** Duct supports shall be designed to carry the weight of the duct half filled with material.

**4.5.2** Where sprinkler protection is provided or cleaning of the duct will be performed, the hanger's design shall include the weight of any expected liquid accumulation.

**4.5.3** Duct supports shall be designed to prevent placing loads on connected equipment.

**4.5.4** Hangers and supports exposed to corrosive atmospheres shall be resistant to the corrosive atmospheres.

**4.5.5** To avoid vibration and stress on the duct, hangers and supports shall be securely fastened to the building or structure.

**4.5.6** Hangers and supports shall be designed to allow for expansion and contraction.

**4.6 Duct Installation.**

**4.6.1** Unless the conditions stipulated in 4.6.1.1, 4.6.1.2, or 4.6.1.3 exist, all ductwork and system components handling combustible material and operating at less than 60°C (140°F) shall have a clearance of not less than 46 cm (18 in.) from combustible construction or any combustible material.

**4.6.1.1** When the ductwork system is equipped with an approved automatic extinguishing system designed for the specific hazard, the clearance shall be permitted to be reduced to 15 cm (6 in.) from combustible materials and 13 mm (½ in.) from combustible construction.

**4.6.1.2** When the combustible material and construction is protected from ductwork by the use of materials or products listed for protection purposes, clearance shall be maintained in accordance with those listings.

**4.6.1.3** When the combustible material and construction is protected from ductwork in accordance with Table 4.6.1.3, the clearances established in 4.6.1 shall be permitted to be reduced in accordance with Table 4.6.1.3.

**4.6.1.4** Spacers and ties for protection materials shall be of noncombustible material and shall not be used directly behind the duct.

**4.6.1.5** With all clearance reduction systems using a ventilated airspace, air circulation shall be provided as described in 4.6.3.

**4.6.1.6** At least 2.5 cm (1 in.) shall be between the wall protector and combustible walls and ceilings for clearance reduction systems using a ventilated space.

**4.6.1.7** Mineral wool batts (blanket or board) used as a part of a clearance reduction system shall have a minimum density of 3.6 kg/m$^3$ (8 lb/ft$^3$) and have a minimum melting point of 816°C (1500°F).

**4.6.1.8** Insulation board used as a part of a clearance reduction system shall meet the following criteria:

(1) Have a thermal conductivity of 0.14 W/m$^2$·hr·°C (1 Btu·in./ft$^2$·hr·°F) or less
(2) Be formed of noncombustible material

**4.6.1.9** At least 2.5 cm (1 in.) shall be between the duct and the wall protector.

**4.6.1.10** In no case shall the clearance between the duct and the wall surface be reduced below that shown in Table 4.6.1.3.

**4.6.2** Duct systems operating at elevated temperatures above 60°C (140°F) shall have clearances from combustible building construction or any combustible material of not less than 46 cm (18 in.).

**4.6.3** Where clearance is reduced by using an airspace between the combustible wall and the wall protector, air circulation shall be provided by one of the methods in 4.6.3.1 through 4.6.3.3.

**Table 4.6.1.3 Reduction of Duct Clearance with Specified Forms of Protection**

| Form of Protection | Maximum Allowable Reduction in Clearance (%) | |
|---|---|---|
| | As Wall Protector | As Ceiling Protector |
| 90 mm (3½ in.) thick masonry wall without ventilated airspace | 33 | — |
| 13 mm (½ in.) thick noncombustible insulation board over 25.4 mm (1 in.) glass fiber or mineral wool batts without ventilated airspace | 50 | 33 |
| 0.61 mm (0.024 in.) (24 gauge) sheet metal over 25.4 mm (1 in.) glass fiber or mineral wool batts reinforced with wire, or equivalent, on rear face with at least a 25.4 mm (1 in.) air gap | 66 | 66 |
| 90 mm (3½ in.) thick masonry wall with at least a 25.4 mm (1 in.) air gap | 66 | — |
| 0.61 mm (0.024 in.) (24 gauge) sheet metal with at least a 25.4 mm (1 in.) air gap | 66 | 50 |
| 13 mm (½ in.) thick noncombustible insulation board with at least a 25.4 mm (1 in.) air gap | 66 | 50 |
| 0.61 mm (0.024 in.) (24 gauge) sheet metal with ventilated airspace over 0.61 mm (0.024 in.) (24 gauge) sheet metal with at least a 25.4 mm (1 in.) air gap | 66 | 50 |
| 25.4 mm (1 in.) glass fiber or mineral wool batts sandwiched between two sheets 0.61 mm (0.024 in.) (24 gauge) sheet metal with at least a 25.4 mm (1 in.) air gap | 66 | 50 |

Note: This table provides the percent reduction in clearance permitted to be applied to the 46 cm (18 in.) clearance established in 4.6.1.



Copyright National Fire Protection Association
Provided by IHS under license with NFPA
No reproduction or networking permitted without license from IHS
Not for Resale

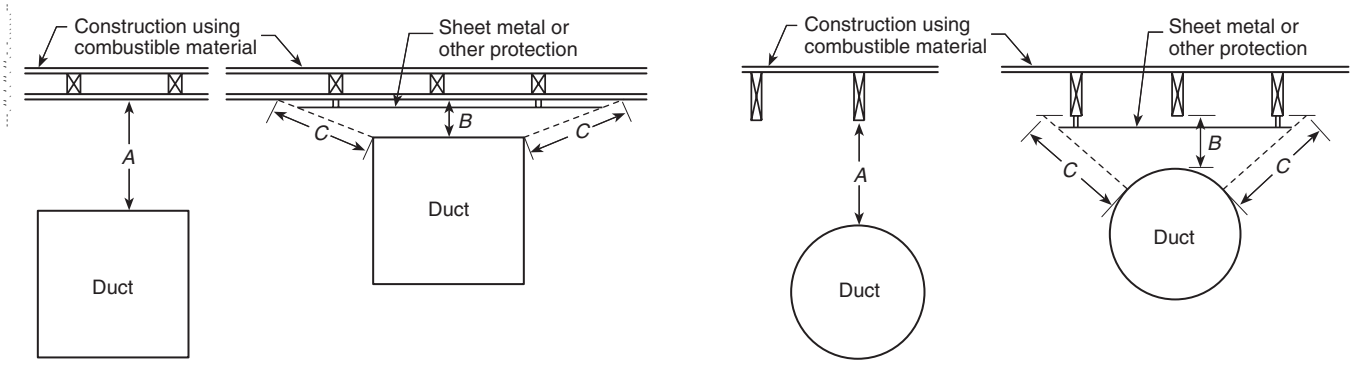


*A* = required clearance with no protection
*B* = reduced clearance permitted
The protection applied to the construction using combustible material shall extend far enough in each direction to make *C* = *A*.

**FIGURE 4.6.4.2 Extent of Protection Required to Reduce Clearances from Ducts.**

**4.6.3.1** Air circulation shall be permitted to be provided by leaving all edges of the wall protector open with at least a 2.5 cm (1 in.) air gap.

**4.6.3.2** If the wall protector is mounted on a single flat wall away from corners, air circulation shall be permitted to be provided by one of the following:

(1) Leaving top and bottom edges open to circulation by maintaining the 2.5 cm (1 in.) air gap
(2) Leaving top and both side edges open to circulation by maintaining the 2.5 cm (1 in.) air gap

**4.6.3.3** Wall protectors that cover two walls in a corner shall be permitted to be open at the top and bottom edges with at least a 2.5 cm (1 in.) air gap.

**4.6.4 Clearances.**

**4.6.4.1** All clearances shall be measured from the outer surface of the combustible material to the nearest point on the outer surface of the duct, disregarding any intervening protection applied to the combustible material.

**4.6.4.2** Clearances shall be measured as shown in Figure 4.6.4.2.

**4.6.4.3** The minimum allowable clearance with protection provided, shown as dimension *B* in Figure 4.6.4.2, shall be calculated by using the following equation:

$$C_{pr} = C_{un}\left(\frac{1-R}{100}\right)$$

where:
$C_{pr}$ = minimum allowable clearance with protection
$C_{un}$ = required clearance with no protection
$R$ = maximum allowed reduction in clearance

## Chapter 5 Corrosive Materials

**5.1 General.**

**5.1.1** Exhaust systems utilizing plastic material shall be permitted to be used to convey nonflammable corrosives.

**5.1.2** The choice of the material type shall be the responsibility of the design engineer.

**5.1.3** All chemical-resistant plastics have heat limitations that shall be considered in the design of a system.

**5.1.4** The minimum standards of materials, construction, and workmanship in 5.1.4.1 through 5.1.4.3 shall be deemed necessary to ensure minimum fire hazard in the operation of these systems.

**5.1.4.1** Plastic ducts shall be in accordance with 4.2.1 and 4.4.7.

**5.1.4.2** All hoods and air-moving device surfaces that are part of the system shall have flame spread ratings at least equivalent to the flame spread rating of the material of the duct system.

**5.1.4.3** Where located in a multistory building or a concealed space, plastic duct materials shall be listed with an external smoke development rating of 50 or less, unless the duct system is located in an area protected by an automatic sprinkler system, or located in a 1-hour fire-rated enclosure.

## Chapter 6 Air-Moving Devices

**6.1 General.**

**6.1.1** Air-moving devices shall be constructed of noncombustible materials and shall be designed and installed to safely convey materials through the exhaust system.

**6.1.2** Where the materials conveyed are not compatible with noncombustible materials, alternate materials of construction shall be permitted based upon a documented risk evaluation.

**6.2 Flammable or Combustible Materials.** Where the materials conveyed are flammable or combustible, the rotating element of the air-moving device shall be nonferrous, or the air-moving device shall be constructed so that a shift of the rotating element or shaft does not permit two ferrous parts to rub or strike.

**6.3 Clearance.**

**6.3.1** Clearance between the rotating element and the casing shall be provided to avoid friction that might lead to fire.

**6.3.2** Allowances shall be made for expansion and loading to prevent contact between moving parts and the duct or housing.



Copyright National Fire Protection Association
Provided by IHS under license with NFPA
No reproduction or networking permitted without license from IHS
Not for Resale

**6.4 Alignment.** The rotating elements shall be mounted on a shaft designed to maintain proper alignment even when the blades or impeller are loaded.

**6.5 Maintenance and Inspection.**

**6.5.1** Air-moving devices shall be located to permit ready access for inspection, lubrication, maintenance, cleaning, and repair.

**6.5.2** Air-moving devices shall be placed on foundations or firmly secured to supports.

**6.6 Location.** Air-moving devices used in systems that air convey dust or vapors containing residue shall be located on the clean-air side of the filtration system.

**6.7 Flexible Connections.** Flexible connections shall be permitted in order to minimize the transmission of vibration.

## Chapter 7 Ignition Sources

**7.1 Electrical Equipment.** All electrical equipment and installations shall comply with the requirements of NFPA 70, *National Electrical Code*.

**7.2* Static Electricity.**

**7.2.1** All system components shall be conductive.

**7.2.2*** Bonding and grounding with a resistance of less than $1.0 \times 10^6$ ohms to ground shall be provided.

**7.2.3** Nonconductive equipment shall be permitted to be used in accordance with the requirements of Chapter 5.

**7.2.4** Where belt drives are used, the belts shall be electrically conductive with a resistance of 1 megohm or less.

**7.3 Manifolds.** Operations generating flames, sparks, or hot material such as from grinding wheels and welding shall not be manifolded into any exhaust system that air conveys flammable or combustible materials.

**7.4 Open Flames and Sparks.** The requirements of 7.4.1 through 7.4.3 shall be applied retroactively.

**7.4.1** Cutting and welding shall comply with the applicable requirements of NFPA 51B, *Standard for Fire Prevention During Welding, Cutting, and Other Hot Work*.

**7.4.2** Grinding, chipping, and other operations that produce either sparks or open flame ignition sources shall be controlled by a hot work permit system in accordance with NFPA 51B, *Standard for Fire Prevention During Welding, Cutting, and Other Hot Work*.

**7.4.3** Smoking shall be permitted only in designated areas.

**7.5 Removal of Ferrous Materials.**

**7.5.1** Ferrous materials capable of igniting combustible material being conveyed shall be removed from the exhaust stream by magnetic separators of the permanent or electromagnetic type.

**7.5.2** Where electromagnetic separators are used, provisions shall be made to indicate the loss of power to the electromagnetic separators.

**7.6* Belt Drives.** Belt drives shall be designed to stall without the belt slipping, or a safety device shall be provided to shut down the equipment if slippage occurs.

**7.7* Bearings.**

**7.7.1** Roller or ball bearings shall be used on all processing and transfer equipment.

**7.7.2** Bearings and drive components shall not be placed inside ducts unless they are protected or enclosed to prevent ignition of flammable materials.

**7.7.3** Lubrication shall be performed in accordance with the manufacturer's recommendations.

**7.7.4** Bushings shall be permitted to be used when an engineering evaluation shows that mechanical loads and speeds preclude ignition due to frictional heating.

**7.8 Equipment.** Equipment with moving parts shall be installed and maintained so that true alignment is maintained and clearance is provided to minimize friction.

## Chapter 8 Fire Protection

**8.1* General.** Any portion of an exhaust system utilizing combustible components or having the potential for combustible residue buildup on the inside, where the duct cross-sectional area is greater than or equal to 480 $cm^2$ (75 $in.^2$), shall be provided with an automatic extinguishing system within the duct and at the duct intake, hood, enclosure, or canopy, or shall be constructed of material listed for use without sprinkler protection.

**8.2 Drainage.** When a sprinkler system is installed, means shall be provided to prevent water accumulation in the duct or flow of water back to a process subject that could be damaged by water.

**8.3 Testing and Inspection.** Fire protection shall be tested and inspected in accordance with NFPA 25, *Standard for the Inspection, Testing, and Maintenance of Water-Based Fire Protection Systems*.

## Chapter 9 Testing and Maintenance

**9.1 General.** Exhaust systems shall be tested, inspected, and maintained to ensure safe operating conditions.

**9.1.1** The responsibility for maintenance shall be assigned to trained personnel who are capable of recognizing potential hazards.

**9.1.2** Maintenance shall include the determination that special protection for duct systems is fully operable and that plant automatic sprinkler protection is in service.

**9.2* System Test.**

**9.2.1** When installation of new systems is complete, the system shall be tested to demonstrate performance before acceptance by the user.

**9.2.2** Modified systems shall be retested.

**9.2.3*** Existing systems shall be tested annually by the user to demonstrate continued performance, unless the manufacturer's requirements are more stringent or where conditions of service and documented past test results dictate more or less frequent testing.



Copyright National Fire Protection Association
Provided by IHS under license with NFPA
No reproduction or networking permitted without license from IHS
Not for Resale

**9.3* System Inspection.** All system components shall be inspected monthly, unless the manufacturer's requirements are more stringent or where conditions of service and documented past inspection results dictate more or less frequent inspection.

**9.3.1** Inspection results shall be recorded and maintained for at least 2 years.

**9.3.2** The user's operational and maintenance program shall include all of the manufacturer's listed procedures that are applicable to the equipment.

**9.3.3** An operational and maintenance checklist shall be maintained.

**9.3.4** Accumulations of conveyed materials and residues shall be removed from hoods and enclosures, ducts and fittings, and air-moving devices.

**9.3.5** The ducts shall be checked for obstructions such as improperly adjusted dampers or shutters.

**9.3.6** Filtration systems shall be inspected and filters cleaned or replaced as required.

**9.3.7** Air-moving devices shall be inspected for belt tension and wear and lubrication.

**9.3.8** Hoods and enclosures shall be inspected for proper confinement and removal of materials.

**9.4 Cleanliness.** Ductwork shall be examined periodically to determine adequacy of cleaning frequency.

**9.5 Maintenance Program.**

**9.5.1** All system components shall be maintained in good operating condition.

**9.5.2** A written maintenance program shall be established.

**9.5.3** The program shall include any and all recommendations provided by the manufacturer.

**9.5.4** All deficiencies found during testing and inspection shall be corrected.

**9.5.5** Serious deficiencies shall require immediate attention.

**9.6 Maintenance Log.** An operational maintenance log shall be kept to document maintenance actions.

## Annex A Explanatory Material

*Annex A is not a part of the requirements of this NFPA document but is included for informational purposes only. This annex contains explanatory material, numbered to correspond with the applicable text paragraphs.*

**A.1.1** The following NFPA standards contain information on the application of exhaust systems to specific industries or operations:

(1) NFPA 30, *Flammable and Combustible Liquids Code*
(2) NFPA 30B, *Code for the Manufacture and Storage of Aerosol Products*
(3) NFPA 32, *Standard for Drycleaning Plants*
(4) NFPA 33, *Standard for Spray Application Using Flammable or Combustible Materials*
(5) NFPA 34, *Standard for Dipping and Coating Processes Using Flammable or Combustible Liquids*
(6) NFPA 35, *Standard for the Manufacture of Organic Coatings*
(7) NFPA 36, *Standard for Solvent Extraction Plants*
(8) NFPA 45, *Standard on Fire Protection for Laboratories Using Chemicals*
(9) NFPA 61, *Standard for the Prevention of Fires and Dust Explosions in Agricultural and Food Processing Facilities*
(10) NFPA 68, *Guide for Venting of Deflagrations*
(11) NFPA 85, *Boiler and Combustion Systems Hazards Code*
(12) NFPA 86, *Standard for Ovens and Furnaces*
(13) NFPA 92A, *Recommended Practice for Smoke-Control Systems*
(14) NFPA 92B, *Guide for Smoke Management Systems in Malls, Atria, and Large Areas*
(15) NFPA 96, *Standard for Ventilation Control and Fire Protection of Commercial Cooking Operations*
(16) NFPA 120, *Standard for Fire Prevention and Control in Coal Mines*
(17) NFPA 204, *Standard for Smoke and Heat Venting*
(18) NFPA 211, *Standard for Chimneys, Fireplaces, Vents, and Solid Fuel-Burning Appliances*
(19) NFPA 230, *Standard for the Fire Protection of Storage*
(20) NFPA 303, *Fire Protection Standard for Marinas and Boatyards*
(21) NFPA 318, *Standard for the Protection of Semiconductor Fabrication Facilities*
(22) NFPA 409, *Standard on Aircraft Hangars*
(23) NFPA 484, *Standard for Combustible Metals, Metal Powders, and Metal Dusts*
(24) NFPA 654, *Standard for the Prevention of Fire and Dust Explosions from the Manufacturing, Processing, and Handling of Combustible Particulate Solids*
(25) NFPA 655, *Standard for Prevention of Sulfur Fires and Explosions*
(26) NFPA 664, *Standard for the Prevention of Fires and Explosions in Wood Processing and Woodworking Facilities*
(27) NFPA 801, *Standard for Fire Protection for Facilities Handling Radioactive Materials*

**A.3.2.1 Approved.** The National Fire Protection Association does not approve, inspect, or certify any installations, procedures, equipment, or materials; nor does it approve or evaluate testing laboratories. In determining the acceptability of installations, procedures, equipment, or materials, the authority having jurisdiction may base acceptance on compliance with NFPA or other appropriate standards. In the absence of such standards, said authority may require evidence of proper installation, procedure, or use. The authority having jurisdiction may also refer to the listings or labeling practices of an organization that is concerned with product evaluations and is thus in a position to determine compliance with appropriate standards for the current production of listed items.

**A.3.2.2 Authority Having Jurisdiction (AHJ).** The phrase "authority having jurisdiction," or its acronym AHJ, is used in NFPA documents in a broad manner, since jurisdictions and approval agencies vary, as do their responsibilities. Where public safety is primary, the authority having jurisdiction may be a federal, state, local, or other regional department or individual such as a fire chief; fire marshal; chief of a fire prevention bureau, labor department, or health department; building official; electrical inspector; or others having statutory authority. For insurance purposes, an insurance inspection department, rating bureau, or other insurance company representative may be the authority having jurisdiction. In many circumstances, the property owner or his or her designated agent assumes the role of the authority having jurisdiction; at government installations, the commanding officer or departmental official may be the authority having jurisdiction.



Copyright National Fire Protection Association
Provided by IHS under license with NFPA
No reproduction or networking permitted without license from IHS
Not for Resale

**A.3.2.4 Listed.** The means for identifying listed equipment may vary for each organization concerned with product evaluation; some organizations do not recognize equipment as listed unless it is also labeled. The authority having jurisdiction should utilize the system employed by the listing organization to identify a listed product.

**A.3.3.1 Air-Moving Device.** Air-moving devices include fans, centrifugal fans, or mixed-flow fans. These devices have previously been called blowers or exhausters. Air-moving devices also include steam ejectors and similar devices.

**A.3.3.3 Exhaust System.** A system can consist of an air-moving device with ducting, connected either to the inlet or discharge or to both. More complicated systems can include ductwork, an air-moving device, control dampers, a filtration system, noise attenuation, and pollution control equipment.

**A.3.3.7 Noncombustible Material.** Materials reported as passing ASTM E 136, *Standard Test Method for Behavior of Materials in a Vertical Tube Furnace at 750°C,* are considered noncombustible materials.

**A.3.3.8 Noncombustible Particulate Solid.** Noncombustible particulate solids include dusts, fibers, fines, chips, chunks, flakes, and mixtures of these.

**A.4.1.2** Materials, when mixed, should not create a fire, explosion, or health hazard.

**A.4.1.3.3** Where deflagration venting is used, its design should be based on information contained in NFPA 68, *Guide for Venting of Deflagrations.*

**A.4.1.5** Capture, control, and conveying of materials are achieved by inward airflow generated by the exhaust pickup or intake, the intake velocity, and the duct velocity.

Capture velocities should be high enough to maintain control of the material in order to accomplish the following:

(1) Convey the material to the intake opening
(2) Overcome thermal air currents from hot processes or heat-generating operations
(3) Overcome air currents caused by grinding wheels and belt conveyors
(4) Overcome air currents caused by dumping and filling operations

Exhaust systems designed for gases, vapors, fumes, and fine dust particles (20 microns or less) require intake velocities high enough to offset air currents caused by room cross-drafts.

Duct velocities are determined by the type of material conveyed *(see Table A.4.1.5).*

The designer also must consider sticky or wet residues or particles, electrostatic effects, and so forth.

For further information, refer to *Industrial Ventilation — a Manual of Recommended Practice,* published by the American Conference of Governmental Industrial Hygienists (ACGIH).

**A.4.1.8** The design of the exhaust system should be coordinated with the architectural and structural designs. The plans and specifications should include a list of all equipment, giving manufacturer and type number. Plans should be drawn to an indicated scale and show all essential details as to location, construction, ventilation ductwork, volume of outside air at standard temperature and pressure introduced for safety ventilation, and control wiring diagrams. The details of the plan should also include the following:

(1) Name of owner and occupant
(2) Location, including street address
(3) Point of compass
(4) Ceiling construction
(5) Full height cross-section
(6) Location of fire walls
(7) Location of partitions
(8) Materials of duct construction

**A.4.3.5** Access into ducts is required to perform intended inspection, to clean interior surfaces, and to service or replace devices located inside the duct.

**A.4.4.4** Building components include walls, floors, or roofs.

**Table A.4.1.5 Range of Minimum Duct Design Velocities**

| Nature of Contaminant | Examples | Design Velocity m/min | Design Velocity ft/min |
|---|---|---|---|
| Vapors, gases, smoke | All vapors, gases, and smoke | 305–610* | 1000–2000* |
| Fumes | Welding | 610–763 | 2000–2500 |
| Very fine light dust | Cotton lint, wood flour, litho powder | 763–915 | 2500–3000 |
| Dry dusts and powders | Fine rubber dust, Bakelite® molding powder dust, jute lint, cotton dust, shavings (light), soap dust, leather shavings | 915–1220 | 3000–4000 |
| Average industrial dust | Grinding dust, buffing lint (dry), wool jute dust (shaker waste), coffee beans, shoe dust, granite dust, silica flour, general material handling, brick cutting, clay dust, foundry (general), limestone dust, packaging and weighing asbestos dust in textile industries | 1068–1220 | 3500–4000 |
| Heavy dusts | Sawdust (heavy and wet), metal turnings, foundry tumbling barrels and shake-out, sandblast dust, wood blocks, hog waste, brass turnings, cast-iron boring dust, lead dust | 1220–1373 | 4000–4500 |
| Heavy or moist dusts | Lead dusts with small chips, moist cement dust, asbestos chunks from transite pipe cutting machines, buffing lint (sticky), quick-lime dust | 1373 and up | 4500 and up |

*Any desired velocity (economic optimum velocity usually within this range).
*Source:* ACGIH, *Industrial Ventilation — A Manual of Recommended Practice.*



Copyright National Fire Protection Association
Provided by IHS under license with NFPA
No reproduction or networking permitted without license from IHS
Not for Resale

**A.4.4.5** For duct systems containing flammable or combustible materials, an evaluation is necessary to determine adequate exhaust stack termination design. Information on stack height can be found in the *ASHRAE Fundamentals Handbook,* the "Airflow Around Buildings" chapter, or the ACGIH publication, *Industrial Ventilation — a Manual of Recommended Practice.*

**A.4.4.6.2** When the materials cannot be enclosed at the source, a local exhaust ventilation system can be used. Because suction inlets have little directional effect beyond a few inches from the inlet, they should be located to sweep the air and minimize pockets that have no air movement. The location of the air makeup system ductwork and discharge points provides more uniform air movement.

When the materials are heavier than air, the inlets should be located near the floor. When the materials are lighter than air, the inlets should be located near the ceiling of the room or enclosure.

**A.7.2** See NFPA 77, *Recommended Practice on Static Electricity*, and Britton, L. G., *Avoiding Static Ignition Hazards in Chemical Operations*, AIChE, 1999; and Pratt, T. H., *Electrostatic Ignitions of Fires and Explosions*, Burgoyne, Inc., Marietta, GA, 1997.

**A.7.2.2** Bonding minimizes the potential difference between conductive objects. Grounding minimizes the potential difference between objects and ground.

Using metal ducts with nonconductive plastic liners to convey mists and particulate solids can create a propagating brush discharge ignition or shock or both.

**A.7.6** Transmission of power by direct drive should be used where possible in preference to belt or chain drives.

**A.7.7** Consideration should be given to the potential for overheating caused by dust entry into bearings. Bearings should be located outside the exhaust stream where they are less exposed and more accessible for inspection and service. Where bearings are in contact with particulate solid streams, sealed or purged bearings are preferred.

**A.8.1** For additional information on these topics, please see the following NFPA standards:

(1) NFPA 11, *Standard for Low-, Medium-, and High-Expansion Foam*
(2) NFPA 11A, *Standard for Medium- and High-Expansion Foam Systems*
(3) NFPA 12, *Standard on Carbon Dioxide Extinguishing Systems*
(4) NFPA 12A, *Standard on Halon 1301 Fire Extinguishing Systems*
(5) NFPA 13, *Standard for the Installation of Sprinkler Systems*
(6) NFPA 15, *Standard for Water Spray Fixed Systems for Fire Protection*
(7) NFPA 17, *Standard for Dry Chemical Extinguishing Systems*
(8) NFPA 17A, *Standard for Wet Chemical Extinguishing Systems*
(9) NFPA 750, *Standard on Water Mist Fire Protection Systems*
(10) NFPA 2001, *Standard on Clean Agent Fire Extinguishing Systems*

**A.9.2** The required procedure and the minimum data necessary for a thorough initial ventilation test are outlined as follows:

(1) Review the system specifications and drawings to determine the relative location and sizes of ducts, fittings, and associated system components
(2) Inspect the system to determine that its installation is in accordance with the specifications and drawings, and check items such as fan rotation, belt slippage, damper settings, and thermal overload sizes of starters
(3) Make a single-line drawing of the installed system and select and identify test locations
(4) Measure the air volume, fan static pressure, motor rpm and amperes, and the temperature of the air in the system
(5) Determine pressure drops across all components such as air-cleaning equipment
(6) Record the test data and design specifications
(7) Compare the test data with design specifications and determine if alterations or adjustments of the system are necessary to meet specifications
(8) If alterations or adjustments are made, retest the system and record the final test data, noting any physical changes that were made on the sketch
(9) Provide a permanent label indicating fan data such as static pressures, rpm, and motor current
(10) Lock all dampers and mark positions with permanent marker
(11) Retain test data sheets for the life of the system

The field tests described in the preceding list pertain to air-handling characteristics only. At times it is necessary or desirable to conduct tests of the environment to determine if the system is providing the desired environmental control. In these cases, the services of a trained industrial hygienist would be required.

For some tests, moisture content of the air in the system or the ambient barometric pressure should be obtained.

All periodic measurements can also be made continuously by means of an operating console or other remote readout system.

The value of obtaining ventilation test data is noted in the following applications:

(1) To record the initial performance of the system and determine if it is functioning in accordance with specifications
(2) To determine the degree of compliance with applicable codes or trade association standards
(3) To provide data upon which to base any necessary changes in the system
(4) To obtain data to assist in the design of future systems
(5) To determine whether the system has sufficient capacity for additional ductwork or other alterations
(6) To obtain data through periodic checks to determine when maintenance or repairs are necessary

**A.9.2.3** The following procedure should be followed for measurements needed to perform the periodic tests:

(1) Refer to the initial test data sheet for test locations
(2) Inspect the system for physical damage (broken, corroded, collapsed duct, etc.) and correct operation of components (fan rotation, damper positions, air cleaner condition, etc.)
(3) Measure static pressure at the same locations used in the initial test
(4) Compare measured static pressure recorded at the same locations used in the initial test to the initial pressure values
(5) Make and record any corrections required
(6) Recheck the system to verify performance if corrections have been made

**A.9.3** Inspection should include hoods; enclosures; ducts; duct connections; filtration system; blast gates locked in marked positions; access openings closed and secured; air-moving device inlets and outlets; air-moving device for belt tension, vibration, and lubrication; and termination and adjacent surfaces.



Copyright National Fire Protection Association
Provided by IHS under license with NFPA
No reproduction or networking permitted without license from IHS
Not for Resale

## Annex B Informational References

**B.1 Referenced Publications.** The following documents or portions thereof are referenced within this standard for informational purposes only and are thus not part of the requirements of this document unless also listed in Chapter 2.

**B.1.1 NFPA Publications.** National Fire Protection Association, 1 Batterymarch Park, Quincy, MA 02169-7471.

NFPA 11, *Standard for Low-, Medium-, and High-Expansion Foam*, 2002 edition.

NFPA 11A, *Standard for Medium- and High-Expansion Foam Systems*, 1999 edition.

NFPA 12, *Standard on Carbon Dioxide Extinguishing Systems*, 2000 edition.

NFPA 12A, *Standard on Halon 1301 Fire Extinguishing Systems*, 2004 edition.

NFPA 13, *Standard for the Installation of Sprinkler Systems*, 2002 edition.

NFPA 15, *Standard for Water Spray Fixed Systems for Fire Protection*, 2001 edition.

NFPA 17, *Standard for Dry Chemical Extinguishing Systems*, 2002 edition.

NFPA 17A, *Standard for Wet Chemical Extinguishing Systems*, 2002 edition.

NFPA 30, *Flammable and Combustible Liquids Code*, 2003 edition.

NFPA 30B, *Code for the Manufacture and Storage of Aerosol Products*, 2002 edition.

NFPA 32, *Standard for Drycleaning Plants*, 2004 edition.

NFPA 33, *Standard for Spray Application Using Flammable or Combustible Materials*, 2003 edition.

NFPA 34, *Standard for Dipping and Coating Processes Using Flammable or Combustible Liquids*, 2003 edition.

NFPA 35, *Standard for the Manufacture of Organic Coatings*, 1999 edition.

NFPA 36, *Standard for Solvent Extraction Plants*, 2004 edition.

NFPA 45, *Standard on Fire Protection for Laboratories Using Chemicals*, 2004 edition.

NFPA 61, *Standard for the Prevention of Fires and Dust Explosions in Agricultural and Food Processing Facilities*, 2002 edition.

NFPA 68, *Guide for Venting of Deflagrations*, 2002 edition.

NFPA 77, *Recommended Practice on Static Electricity*, 2000 edition.

NFPA 85, *Boiler and Combustion Systems Hazards Code*, 2004 edition.

NFPA 86, *Standard for Ovens and Furnaces*, 2003 edition.

NFPA 92A, *Recommended Practice for Smoke-Control Systems*, 2000 edition.

NFPA 92B, *Guide for Smoke Management Systems in Malls, Atria, and Large Areas*, 2000 edition.

NFPA 96, *Standard for Ventilation Control and Fire Protection of Commercial Cooking Operations*, 2004 edition.

NFPA 120, *Standard for Fire Prevention and Control in Coal Mines*, 2004 edition.

NFPA 204, *Standard for Smoke and Heat Venting*, 2002 edition.

NFPA 211, *Standard for Chimneys, Fireplaces, Vents, and Solid Fuel-Burning Appliances*, 2003 edition.

NFPA 230, *Standard for the Fire Protection of Storage*, 2003 edition.

NFPA 303, *Fire Protection Standard for Marinas and Boatyards*, 2000 edition.

NFPA 318, *Standard for the Protection of Semiconductor Fabrication Facilities*, 2002 edition.

NFPA 409, *Standard on Aircraft Hangars*, 2004 edition.

NFPA 484, *Standard for Combustible Metals, Metal Powders, and Metal Dusts*, 2002 edition.

NFPA 654, *Standard for the Prevention of Fire and Dust Explosions from the Manufacturing, Processing, and Handling of Combustible Particulate Solids*, 2000 edition.

NFPA 655, *Standard for Prevention of Sulfur Fires and Explosions*, 2001 edition.

NFPA 664, *Standard for the Prevention of Fires and Explosions in Wood Processing and Woodworking Facilities*, 2002 edition.

NFPA 750, *Standard on Water Mist Fire Protection Systems*, 2003 edition.

NFPA 801, *Standard for Fire Protection for Facilities Handling Radioactive Materials*, 2003 edition.

NFPA 2001, *Standard on Clean Agent Fire Extinguishing Systems*, 2004 edition.

**B.1.2 Other Publications.**

**B.1.2.1 ACGIH Publication.** American Conference of Governmental Industrial Hygienists, 1330 Kemper Meadow Drive, Cincinnati, OH 45240.

*Industrial Ventilation — a Manual of Recommended Practice*, 23rd edition, 1997.

**B.1.2.2 AIChE Publication.** American Institute of Chemical Engineers, Three Park Avenue, New York, NY 10016-5991.

Britton, L.G., *Avoiding Static Ignition Hazards in Chemical Operations*, 1999.

**B.1.2.3 ASHRAE Publication.** American Society of Heating, Refrigerating and Air Conditioning Engineers, Inc., 1791 Tullie Circle, N.E., Atlanta, GA 30329.

*ASHRAE Fundamentals Handbook*, 2001.

**B.1.2.4 ASTM Publication.** American Society for Testing and Materials, 100 Barr Harbor Drive, West Conshohocken, PA 19428-2959.

ASTM E 136, *Standard Test Method for Behavior of Materials in a Vertical Tube Furnace at 750°C*, 1996.

**B.1.2.5 Other Publication.** Pratt, T. H., *Electrostatic Ignitions of Fires and Explosions*, Burgoyne, Inc., Marietta, GA, 1997.

**B.2 Informational References. (Reserved)**

**B.3 References for Extracts.** The following documents are listed here to provide reference information, including title and edition, for extracts given throughout the nonmandatory sections of this standard as indicated by a reference in brackets [ ] following a section or paragraph. These documents are not a part of the requirements of this document unless also listed in Chapter 2 for other reasons.

NFPA 33, *Standard for Spray Application Using Flammable or Combustible Materials*, 2003 edition.

NFPA 259, *Standard Test Method for Potential Heat of Building Materials*, 2003 edition.

NFPA 329, *Recommended Practice for Handling Releases of Flammable and Combustible Liquids and Gases*, 1999 edition.



Copyright National Fire Protection Association
Provided by IHS under license with NFPA
No reproduction or networking permitted without license from IHS
Not for Resale

## Index

© 2004 National Fire Protection Association. All Rights Reserved.

The copyright in this index is separate and distinct from the copyright in the document that it indexes. The licensing provisions set forth for the document are not applicable to this index. This index may not be reproduced in whole or in part by any means without the express written permission of NFPA.

**-A-**

**Access doors** ..... 4.3, A.4.3.5, A.9.3
**Air-moving devices (AMDs)** ..... 4.4.6.1, Chap. 6
  Definition ..... 3.3.1, A.3.3.1
  Inspection and maintenance ..... 6.5, 9.3.4, 9.3.7, A.9.3
  Plastic ..... 5.1.4.2
  Size of ..... 4.1.5, A.4.1.5
  Velocities ..... 4.1.5, A.4.1.5
**Airspaces** ..... Table 4.6.1.3, 4.6.1.5, 4.6.3
**Alarm systems** ..... 4.1.14
**Approval of plans** ..... 4.1.8, A.4.1.8
**Approved (definition)** ..... 3.2.1, A.3.2.1
**Authority having jurisdiction (definition)** ..... 3.2.2, A.3.2.2

**-B-**

**Balancing devices** ..... 4.4.1, 4.4.2
**Bearings** ..... 7.7, A.7.7
**Belt drives** ..... 7.2.4, 7.6, A.7.6
**Bonding, electrical** ..... 7.2.2, A.7.2.2
**Branch ducts** ..... 4.4.8, 4.4.9

**-C-**

**Ceiling protectors** ..... Table 4.6.1.3
**Cleaning** ..... 9.4
**Clearances**
  Air-moving devices ..... 6.3
  Duct ..... 4.6
**Concealed spaces** ..... 5.1.4.3
**Concentrations of gases/vapors/mists in exhaust system** ..... 4.1.3, A.4.1.3.3
**Construction** ..... Chap. 4
**Corrosive materials** ..... Chap. 5
**Cutting** ..... *see* Welding

**-D-**

**Dampers** ..... 4.1.9, 4.1.10, 4.4.3, 9.3.5
**Definitions** ..... Chap. 3
**Deflagration venting** ..... 4.1.3.3, A.4.1.3.3
**Design of system** ..... Chap. 4
**Detection systems** ..... 4.1.14
**Doors, access** ..... *see* Access doors
**Drainage, sprinkler water** ..... 8.2
**Duct liners** ..... 4.4.7
**Ducts** ..... 4.1.9 to 4.1.13
  Access to ..... 4.3, A.4.3.5
  Branch ..... 4.4.8, 4.4.9
  Clearances ..... 4.6
  Condensate ..... 4.2.6
  Construction ..... 4.2
  Definition ..... 3.3.2
  Extinguishing systems for ..... 4.2.1.1, 4.2.4, 4.5.2, 5.1.4.3, 8.1, 8.2, A.8.1
  Flexible ..... 4.4.10
  Hangers and supports ..... 4.2.4, 4.5
  Laps in ..... 4.2.5
  Maintenance ..... 9.3.4, 9.3.5, 9.4, A.9.3
  Materials ..... 4.2.1, 5.1.4.1
  Plastic ..... 5.1.4.1
  Terminations ..... 4.4.5, A.4.4.5, A.9.3
**Dusts** ..... 6.6, A.7.7

**-E-**

**Electrical equipment** ..... 7.1, 7.2, A.7.2
**Enclosures** ..... 4.4.6.1, 4.4.6.2, A.4.4.6.2
  Fire protection of ..... 8.1, A.8.1
  Fire-rated ..... 5.1.4.3
  Maintenance of ..... 9.3.4, 9.3.8, A.9.3
**Equipment**
  Bearings ..... 7.7, A.7.7
  Belt drives ..... 7.2.4, 7.6, A.7.6
  Electrical ..... 7.1, 7.2, A.7.2
  Installation and maintenance ..... 6.4, 6.5, 7.8
  Magnetic separators ..... 4.1.7, 7.5
  Manifolds ..... 7.3
**Equivalency to standard** ..... 1.4
**Exhaust systems** ..... *see also* Air-moving devices (AMDs)
  Conveying flammable/combustible material ..... 4.6.1, 6.2
  Definition ..... 3.3.3, A.3.3.3
  Design and construction ..... Chap. 4
  Electrical equipment ..... 7.1, 7.2, A.7.2
  Fire protection ..... *see* Fire protection
  Incompatible materials in ..... 4.1.2, A.4.1.2
  Testing and maintenance ..... 6.5, Chap. 9
**Extinguishing systems, automatic** .... 4.6.1.1, 8.1, A.8.1; *see also* Ducts, extinguishing systems for; Sprinkler systems

**-F-**

**Ferrous materials, removal of** ..... 4.1.7, 7.5
**Filtration systems** ..... 6.6, 9.3.6, A.9.3
**Fire barriers** ..... 4.1.9(1), 4.1.12, 4.1.13
  Definition ..... 3.3.4
**Fire dampers** ..... 4.1.9, 4.1.10
**Fire protection** ..... Chap. 8; *see also* Sprinkler systems
  Products or materials ..... 4.6.1.1 to 4.6.1.4, Table 4.6.1.3
  Testing and inspection ..... 8.3
**Flames, open** ..... 4.1.6, 7.3, 7.4
**Flexible connections** ..... 6.7
**Flexible ducts** ..... 4.4.10

**-G-**

**Grinding operations** ..... 4.1.6, 7.3, 7.4.2
**Grounding, electrical** ..... 7.2.2, A.7.2.2

**-H-**

**Hangers** ..... 4.5
**Hoods** ..... 4.4.6, A.4.4.6.2
  Fire protection of ..... 8.1, A.8.1
  Maintenance ..... 9.3.4, 9.3.8, A.9.3
  Plastic ..... 5.1.4.2
**Hot work** ..... 4.1.6, 7.3, 7.4

**-I-**

**Ignition sources** ..... Chap. 7
**Incompatible materials** ..... 4.1.2, A.4.1.2
**Inspections** ..... 6.5, 8.3, 9.1, 9.3, A.9.3

**-L-**

**Labeled (definition)** ..... 3.2.3
**Limited combustible (definition)** ..... 3.3.5
**Liners, duct** ..... 4.4.7



Copyright National Fire Protection Association
Provided by IHS under license with NFPA
No reproduction or networking permitted without license from IHS
Not for Resale

**Listed (definition)** ..... 3.2.4, A.3.2.4
**Louvers** ..... 4.4.3
**Lower flammable limit (LFL)** ..... 4.1.3
Definition ..... 3.3.6

**-M-**

**Magnetic separators** ..... 4.1.7, 7.5
**Maintenance** ..... 6.5, 7.8, 9.1, 9.3 to 9.6, A.9.3
**Manifolds** ..... 7.3
**Multistory buildings** ..... 5.1.4.3

**-N-**

**Noncombustible materials** ..... 4.2.1, 4.6.1.4
Definition ..... 3.3.7, A.3.3.7
**Noncombustible particulate solids (definition)** ..... 3.3.8, A.3.3.8

**-O-**

**Open flames** ..... 4.1.6, 7.3, 7.4

**-P-**

**Plans** ..... 4.1.8, A.4.1.8
**Purpose of standard** ..... 1.2

**-R-**

**References** ..... Chap. 2, Annex B
**Retroactivity of standard** ..... 1.3

**-S-**

**Scope of standard** ..... 1.1, A.1.1
**Separators, magnetic** ..... 4.1.7, 7.5
**Shall (definition)** ..... 3.2.5
**Shutters** ..... 9.3.5
**Smoking prohibitions** ..... 7.4.3
**Sparks** ..... 4.1.6, 7.3, 7.4
**Sprinkler systems** ..... 8.1, 8.2, A.8.1
Duct ..... 4.2.4, 4.5.2, 5.1.4.3, 8.1, 8.2, A.8.1
Plastic duct systems ..... 5.1.4.3
**Static electricity** ..... 7.2, A.7.2
**Supports** ..... 4.2.4, 4.5

**-T-**

**Temperatures, elevated** ..... 4.6.2
**Testing** ..... 8.3, 9.1, 9.2, A.9.2

**-V-**

**Venting, deflagration** ..... 4.1.3.3, A.4.1.3.3

**-W-**

**Wall protectors** ..... Table 4.6.1.3, 4.6.1.6, 4.6.3
**Welding** ..... 4.1.6, 7.3, 7.4.1



--`,,`,,`-`-`,,`,,`,`,,`---

Copyright National Fire Protection Association
Provided by IHS under license with NFPA
No reproduction or networking permitted without license from IHS

Not for Resale

## *Sequence of Events Leading to Publication of an NFPA Committee Document*

Call goes out for proposals to amend existing document or for recommendations on new document.

▼

Committee meets to act on proposals, to develop its own proposals, and to prepare its report.

▼

Committee votes on proposals by letter ballot. If two-thirds approve, report goes forward. Lacking two-thirds approval, report returns to committee.

▼

Report — *Report on Proposals* (ROP) — is published for public review and comment.

▼

Committee meets to act on each public comment received.

▼

Committee votes on comments by letter ballot. If two-thirds approve, supplementary report goes forward. Lacking two-thirds approval, supplementary report returns to committee.

▼

Supplementary report — *Report on Comments* (ROC) — is published for public review.

▼

NFPA membership meets (Annual or Fall Meeting) and acts on committee report (ROP or ROC).

▼

Committee votes on any amendments to report approved at NFPA Annual or Fall Meeting.

▼

Appeals to Standards Council on Association action must be filed within 20 days of the NFPA Annual or Fall Meeting.

▼

Standards Council decides, based on all evidence, whether or not to issue standard or to take other action, including upholding any appeals.

## *Committee Membership Classifications*

The following classifications apply to Technical Committee members and represent their principal interest in the activity of the committee.

M *Manufacturer:* A representative of a maker or marketer of a product, assembly, or system, or portion thereof, that is affected by the standard.

U *User:* A representative of an entity that is subject to the provisions of the standard or that voluntarily uses the standard.

I/M *Installer/Maintainer:* A representative of an entity that is in the business of installing or maintaining a product, assembly, or system affected by the standard.

L *Labor:* A labor representative or employee concerned with safety in the workplace.

R/T *Applied Research/Testing Laboratory:* A representative of an independent testing laboratory or independent applied research organization that promulgates and/or enforces standards.

E *Enforcing Authority:* A representative of an agency or an organization that promulgates and/or enforces standards.

I *Insurance:* A representative of an insurance company, broker, agent, bureau, or inspection agency.

C *Consumer:* A person who is, or represents, the ultimate purchaser of a product, system, or service affected by the standard, but who is not included in the *User* classification.

SE *Special Expert:* A person not representing any of the previous classifications, but who has a special expertise in the scope of the standard or portion thereof.

NOTES:

1. "Standard" connotes code, standard, recommended practice, or guide.
2. A representative includes an employee.
3. While these classifications will be used by the Standards Council to achieve a balance for Technical Committees, the Standards Council may determine that new classifications of members or unique interests need representation in order to foster the best possible committee deliberations on any project. In this connection, the Standards Council may make such appointments as it seems appropriate in the public interest, such as the classification of "Utilities" in the National Electrical Code Committee.
4. Representatives of subsidiaries of any group are generally considered to have the same classification as the parent organization.

Copyright National Fire Protection Association
Provided by IHS under license with NFPA
No reproduction or networking permitted without license from IHS
Not for Resale

# NFPA Technical Committee Document Proposal Form

**Note: All proposals must be received by 5:00 p.m. EST/EDST on the published proposal closing date.**

**For further information on the standards-making process, please contact Codes and Standards Administration at 617-984-7249. For technical assistance, please call NFPA at 617-770-3000.**

FOR OFFICE USE ONLY
Log #: _____
Date Rec'd: _____

**Please indicate in which format you wish to receive your ROP/ROC:** ☐ **CD ROM** ☐ **paper** ☐ **download**
**(Note: In choosing the download option you intend to view the ROP/ROC from our Website. No copy will be sent to you.)**

**Date** 12/18/02 **Name** John B. Smith **Telephone** 617-555-1212
**Company** _____
**Address** 9 Seattle St. **City** Seattle **State** WA **Zip** 02255
**Please indicate organization represented (if any)** Fire Marshals Assn. of North America

1. **a) NFPA Document Title** National Fire Alarm Code
   **b) NFPA No. & Edition** NFPA 72, 2002 ed. **c) Section/Paragraph** 4.4.7.1.1

2. **Proposal Recommends:** *(check one)* ☐ **new text** ☐ **revised text** ☒ **deleted text**

3. **Proposal.** *(Include proposed new or revised wording, or identification of wording to be deleted.)* Note: Proposed text should be in legislative format, that is, use underscore to denote wording to be inserted (inserted wording) and strike-through to denote wording to be deleted (~~deleted wording~~). Delete exception.

4. **Statement of Problem and Substantiation for Proposal.** Note: State the problem that will be resolved by your recommendation. Give the specific reason for your proposal including copies of tests, research papers, fire experience, etc. If more than 200 words, it may be abstracted for publication. A properly installed and maintained system should be free of ground faults. The occurrence of one or more ground faults should be required to cause a "trouble" signal because it indicates a condition that could contribute to future malfunction of the system. Ground fault protection has been widely available on these systems for years and its cost is negligible. Requiring it on all systems will promote better installations, maintenance and reliability.

5. ☒ **This Proposal is Original Material.** Note: Original material is considered to be the submitter's own idea based on or as a result of his/her own experience, thought, or research and, to the best of his/her knowledge, is not copied from another source.

   ☐ **This Proposal is Not Original Material; Its Source** ***(if known)*** **is as Follows:** _____

Sample

*I hereby grant the NFPA all and full rights in copyright to this proposal, and I understand that I acquire no rights in any publication of NFPA in which this proposal in this or another similar or analogous form is used.*

**Signature** ***(Required)*** John B. Smith

**PLEASE USE SEPARATE FORM FOR EACH PROPOSAL • NFPA FAX (617) 770-3500**

**Mail to: Secretary, Standards Council • NFPA • 1 Batterymarch Park • PO Box 9101 • Quincy, MA 02269-9101**

--`,,`,,`-`-`,,`,,`,`,,`---

Copyright National Fire Protection Association
Provided by IHS under license with NFPA
No reproduction or networking permitted without license from IHS

Not for Resale

# NFPA Technical Committee Document Proposal Form

**Note: All proposals must be received by 5:00 p.m. EST/EDST on the published proposal closing date.**

**For further information on the standards-making process, please contact Codes and Standards Administration at 617-984-7249. For technical assistance, please call NFPA at 617-770-3000.**

FOR OFFICE USE ONLY
Log #: _____
Date Rec'd: _____

**Please indicate in which format you wish to receive your ROP/ROC:** ☐ **CD ROM** ☐ **paper** ☐ **download**
**(Note: In choosing the download option you intend to view the ROP/ROC from our Website. No copy will be sent to you.)**

**Date** _____ **Name** _____ **Telephone** _____
**Company** _____
**Address** _____ **City** _____ **State** _____ **Zip** _____
**Please indicate organization represented (if any)** _____

1. **a) NFPA Document Title** _____
   **b) NFPA No. & Edition** _____ **c) Section/Paragraph** _____

2. **Proposal Recommends:** *(check one)* ☐ **new text** ☐ **revised text** ☐ **deleted text**

3. **Proposal.** *(Include proposed new or revised wording, or identification of wording to be deleted.)* Note: Proposed text should be in legislative format, that is, use underscore to denote wording to be inserted (inserted wording) and strike-through to denote wording to be deleted (~~deleted wording~~). _____

4. **Statement of Problem and Substantiation for Proposal.** Note: State the problem that will be resolved by your recommendation. Give the specific reason for your proposal including copies of tests, research papers, fire experience, etc. If more than 200 words, it may be abstracted for publication. _____

5. ☐ **This Proposal is Original Material.** Note: Original material is considered to be the submitter's own idea based on or as a result of his/her own experience, thought, or research and, to the best of his/her knowledge, is not copied from another source.

   ☐ **This Proposal is Not Original Material; Its Source *(if known)* is as Follows:** _____

*I hereby grant the NFPA all and full rights in copyright to this proposal, and I understand that I acquire no rights in any publication of NFPA in which this proposal in this or another similar or analogous form is used.*

**Signature *(Required)*** _____

**PLEASE USE SEPARATE FORM FOR EACH PROPOSAL • NFPA FAX (617) 770-3500**

**Mail to: Secretary, Standards Council • NFPA • 1 Batterymarch Park • PO Box 9101 • Quincy, MA 02269-9101**

Copyright National Fire Protection Association
Provided by IHS under license with NFPA
No reproduction or networking permitted without license from IHS
Not for Resale