NFPA 90B

Standard for the Installation of Warm Air Heating and Air-Conditioning Systems

2006 Edition



NFPA, 1 Batterymarch Park, Quincy, MA 02169-7471
An International Codes and Standards Organization

--`,,```,,,,````-`-`,,`,,`,`,,`---

Copyright National Fire Protection Association
Provided by IHS under license with NFPA
No reproduction or networking permitted without license from IHS

Not for Resale

IMPORTANT NOTICES AND DISCLAIMERS CONCERNING NFPA DOCUMENTS

NOTICE AND DISCLAIMER OF LIABILITY CONCERNING THE USE OF NFPA DOCUMENTS

NFPA codes, standards, recommended practices, and guides, of which the document contained herein is one, are developed through a consensus standards development process approved by the American National Standards Institute. This process brings together volunteers representing varied viewpoints and interests to achieve consensus on fire and other safety issues. While the NFPA administers the process and establishes rules to promote fairness in the development of consensus, it does not independently test, evaluate, or verify the accuracy of any information or the soundness of any judgments contained in its codes and standards.

The NFPA disclaims liability for any personal injury, property or other damages of any nature whatsoever, whether special, indirect, consequential or compensatory, directly or indirectly resulting from the publication, use of, or reliance on this document. The NFPA also makes no guaranty or warranty as to the accuracy or completeness of any information published herein.

In issuing and making this document available, the NFPA is not undertaking to render professional or other services for or on behalf of any person or entity. Nor is the NFPA undertaking to perform any duty owed by any person or entity to someone else. Anyone using this document should rely on his or her own independent judgment or, as appropriate, seek the advice of a competent professional in determining the exercise of reasonable care in any given circumstances.

The NFPA has no power, nor does it undertake, to police or enforce compliance with the contents of this document. Nor does the NFPA list, certify, test or inspect products, designs, or installations for compliance with this document. Any certification or other statement of compliance with the requirements of this document shall not be attributable to the NFPA and is solely the responsibility of the certifier or maker of the statement.

--`,,```,,-`-`,,`,,`,`,,`---

Copyright National Fire Protection Association
Provided by IHS under license with NFPA
No reproduction or networking permitted without license from IHS

Not for Resale

ADDITIONAL NOTICES AND DISCLAIMERS

Updating of NFPA Documents

Users of NFPA codes, standards, recommended practices, and guides should be aware that these documents may be superseded at any time by the issuance of new editions or may be amended from time to time through the issuance of Tentative Interim Amendments. An official NFPA document at any point in time consists of the current edition of the document together with any Tentative Interim Amendments and any Errata then in effect. In order to determine whether a given document is the current edition and whether it has been amended through the issuance of Tentative Interim Amendments or corrected through the issuance of Errata, consult appropriate NFPA publications such as the National Fire Codes® Subscription Service, visit the NFPA website at www.nfpa.org, or contact the NFPA at the address listed below.

Interpretations of NFPA Documents

A statement, written or oral, that is not processed in accordance with Section 6 of the Regulations Governing Committee Projects shall not be considered the official position of NFPA or any of its Committees and shall not be considered to be, nor be relied upon as, a Formal Interpretation.

Patents

The NFPA does not take any position with respect to the validity of any patent rights asserted in connection with any items which are mentioned in or are the subject of NFPA codes, standards, recommended practices, and guides, and the NFPA disclaims liability for the infringement of any patent resulting from the use of or reliance on these documents. Users of these documents are expressly advised that determination of the validity of any such patent rights, and the risk of infringement of such rights, is entirely their own responsibility.

NFPA adheres to applicable policies of the American National Standards Institute with respect to patents. For further information contact the NFPA at the address listed below.

Law and Regulations

Users of these documents should consult applicable federal, state, and local laws and regulations. NFPA does not, by the publication of its codes, standards, recommended practices, and guides, intend to urge action that is not in compliance with applicable laws, and these documents may not be construed as doing so.

Copyrights

This document is copyrighted by the NFPA. It is made available for a wide variety of both public and private uses. These include both use, by reference, in laws and regulations, and use in private self-regulation, standardization, and the promotion of safe practices and methods. By making this document available for use and adoption by public authorities and private users, the NFPA does not waive any rights in copyright to this document.

Use of NFPA documents for regulatory purposes should be accomplished through adoption by reference. The term "adoption by reference" means the citing of title, edition, and publishing information only. Any deletions, additions, and changes desired by the adopting authority should be noted separately in the adopting instrument. In order to assist NFPA in following the uses made of its documents, adopting authorities are requested to notify the NFPA (Attention: Secretary, Standards Council) in writing of such use. For technical assistance and questions concerning adoption of NFPA documents, contact NFPA at the address below.

For Further Information

All questions or other communications relating to NFPA codes, standards, recommended practices, and guides and all requests for information on NFPA procedures governing its codes and standards development process, including information on the procedures for requesting Formal Interpretations, for proposing Tentative Interim Amendments, and for proposing revisions to NFPA documents during regular revision cycles, should be sent to NFPA headquarters, addressed to the attention of the Secretary, Standards Council, NFPA, 1 Batterymarch Park, P.O. Box 9101, Quincy, MA 02269-9101.

For more information about NFPA, visit the NFPA website at www.nfpa.org.

--`,,```,-`-`,,`,,`,`,,`---

Copyright National Fire Protection Association
Provided by IHS under license with NFPA
No reproduction or networking permitted without license from IHS

Not for Resale

Copyright © 2005, National Fire Protection Association, All Rights Reserved

NFPA 90B

Standard for the

Installation of Warm Air Heating and Air-Conditioning Systems

2006 Edition

This edition of NFPA 90B, *Standard for the Installation of Warm Air Heating and Air-Conditioning Systems*, was prepared by the Technical Committee on Air Conditioning and acted on by NFPA at its June Association Technical Meeting held June 6–10, 2005, in Las Vegas, NV. It was issued by the Standards Council on July 29, 2005, with an effective date of August 18, 2005, and supersedes all previous editions.

This edition of NFPA 90B was approved as an American National Standard on August 18, 2005.

Origin and Development of NFPA 90B

This standard dates from 1899, when committee attention was first given to blower and exhaust systems. Prior to 1936, the subject of air conditioning was covered in NFPA standards on blower systems. In 1937, it was decided to prepare a separate standard on air-conditioning, warm air heating, and ventilating systems. This standard was initially adopted in 1937 with subsequent amendments in 1938, 1939, 1940, 1942, 1950, 1952, 1955, 1956, 1960, 1961, 1963, 1964, 1965, 1968, 1971, 1973, 1976, 1980, 1984, and 1989. The 1993 and 1996 editions were reconfirmations of the 1989 edition. The 1999 edition contained changes that were mainly editorial in nature.

The 2002 edition incorporated format changes to comply with the *Manual of Style for NFPA Technical Committee Documents* and new provisions for the removal of accessible abandoned materials in concealed spaces and plenums.

The only changes to the 2006 edition were to update "frame spread rating" to "frame spread index."

Copyright National Fire Protection Association
Provided by IHS under license with NFPA
No reproduction or networking permitted without license from IHS
Not for Resale

Technical Committee on Air Conditioning

L. Jeffrey Mattern, *Chair*
FM Global, PA [I]
Rep. FM Global/FM Research

Charles E. Altizer, DHCD-Jackson Center, VA [E]
Rep. International Fire Marshals Association
Jesse J. Beitel, Hughes Associates, Inc., MD [SE]
Joseph A. Brooks, Air Movement & Control Association International, IL [M]
Rep. Air Movement & Control Association/HVI Division
James S. Buckley, CCRD Partners, TX [IM]
Rep. American Society for Heating, Refrigeration & Air Conditioning Engineers Inc.
Frederic B. Clarke, Benjamin Clarke Associates, Inc., VA [SE]
Michael Earl Dillon, Dillon Consulting Engineers, Inc., CA [SE]
Thomas M. Dusza, Schirmer Engineering Corporation, CA [I]
Victor Ferrante, U.S. Dept. of Housing and Urban Development, DC [U]
Frederick M. Foster, Fusion Data Comm., Inc., CT [IM]
James R. Hoover, The DuPont Company, DE [M]
Rep. Society of the Plastics Industry, Inc.
Winfield T. Irwin, Irwin Services, PA [M]
Rep. North American Insulation Manufacturers Association
Michael J. Jontry, State of Illinois, IL [E]
Philip R. Jose, U.S. Department of Veterans Affairs, NY [U]
Rep. American Society for Healthcare Engineering
Daniel J. Kaiser, Underwriters Laboratories Inc., IL [RT]
Marvin A. Koerber, ATCO Rubber Products, Inc., SC [M]
Rep. Air Diffusion Council
John M. Moritz, Jr., The Gitto/Global Corporation, PA [M]
Rep. Fire Retardant Chemicals Association/Plenum Cable Association
Richard P. Owen, City of St. Paul, MN [E]
Rep. National Electrical Code Correlating Committee
Frank Peri, Communications Design Corporation, MD [SE]
Rep. Association of Cabling Professionals
Suresh K. Shah, U.S. Department of Health and Human Services, TX [U]
Randolph W. Tucker, The RJA Group, Inc., TX [SE]
Robert J. Wasilewski, Sheet Metal & Air Conditioning Contractors National Association, VA [IM]
Rep. Sheet Metal & Air Conditioning Contractors National Association
Robert A. Wessel, Gypsum Association, DC [M]
Robert J. Wills, American Iron and Steel Institute, AL [M]
Rep. American Iron and Steel Institute

Alternates

Lee Applegate, Apollo Fire Detections Ltd., CA [M]
(Voting Alt. to NEMA Rep.)
Delbert F. Boring, Jr., American Iron and Steel Institute, OH [M]
(Alt. to R. J. Wills)
Douglas S. Erickson, American Society for Healthcare Engineering, VA [U]
(Alt. to P. R. Jose)
Marcelo M. Hirschler, GBH International, CA [M]
(Alt. to J. M. Moritz)
Eli Howard III, Sheet Metal & Air Conditioning Contractors National Association, VA [IM]
(Alt. to R. J. Wasilewski)
Ralph A. Koerber, ATCO Rubber Products, Inc., SC [M]
(Alt. to M. A. Koerber)
Randall K. Laymon, Underwriters Laboratories Inc., IL [RT]
(Alt. to D. J. Kaiser)
Peter J. Mulvihill, The RJA Group, Inc., NV [SE]
(Alt. to R. W. Tucker)
Thomas E. Ponder, CertainTeed Corporation, PA [M]
(Alt. to W. T. Irwin)
Michael J. Rzeznik, Schirmer Engineering of New York, NY [I]
(Alt. to T. M. Dusza)
Robert Van Becelaere, Ruskin Manufacturing, MO [M]
(Alt. to J. A. Brooks)

Allan Fraser, NFPA Staff Liaison

This list represents the membership at the time the Committee was balloted on the final text of this edition. Since that time, changes in the membership may have occurred. A key to classifications is found at the back of the document.

NOTE: Membership on a committee shall not in and of itself constitute an endorsement of the Association or any document developed by the committee on which the member serves.

Committee Scope: This Committee shall have primary responsibility for documents on the construction, installation, operation, and maintenance of systems for air conditioning, warm air heating, and ventilating including filters, ducts, and related equipment to protect life and property from fire, smoke, and gases resulting from fire or from conditions having manifestations similar to fire.

--`,,```,,,-`-`,,`,,`,`,,`---

Copyright National Fire Protection Association
Provided by IHS under license with NFPA
No reproduction or networking permitted without license from IHS
Not for Resale

Contents

Chapter 1 Administration **90B–** 4
1.1 Scope **90B–** 4
1.2 Purpose **90B–** 4
1.3 Application **90B–** 4
1.4 Equivalency **90B–** 4

Chapter 2 Referenced Publications **90B–** 4
2.1 General **90B–** 4
2.2 NFPA Publications **90B–** 4
2.3 Other Publications **90B–** 4
2.4 References for Extracts in Mandatory Sections **90B–** 5

Chapter 3 Definitions **90B–** 5
3.1 General **90B–** 5
3.2 NFPA Official Definitions **90B–** 5
3.3 General Definitions **90B–** 5

Chapter 4 System Components **90B–** 5
4.1 Supply Systems **90B–** 5
4.2 Return Systems **90B–** 7
4.3 Common Requirements **90B–** 7

Chapter 5 Fire Integrity of Building Construction **90B–** 8
5.1 Clearances to Combustible Material **90B–** 8
5.2 Firestopping **90B–**13

Chapter 6 Equipment, Wiring, and Controls **90B–**13
6.1 Equipment **90B–**13
6.2 Electric Wiring and Equipment **90B–**14
6.3 Controls **90B–**14

Annex A Explanatory Material **90B–**14

Annex B Informational References **90B–**15

Index **90B–**16

Copyright National Fire Protection Association
Provided by IHS under license with NFPA
No reproduction or networking permitted without license from IHS
Not for Resale

NFPA 90B

Standard for the

Installation of Warm Air Heating and Air-Conditioning Systems

2006 Edition

IMPORTANT NOTE: This NFPA document is made available for use subject to important notices and legal disclaimers. These notices and disclaimers appear in all publications containing this document and may be found under the heading "Important Notices and Disclaimers Concerning NFPA Documents." They can also be obtained on request from NFPA or viewed at www.nfpa.org/disclaimers.

NOTICE: An asterisk (*) following the number or letter designating a paragraph indicates that explanatory material on the paragraph can be found in Annex A.

Changes other than editorial are indicated by a vertical rule beside the paragraph, table, or figure in which the change occurred. These rules are included as an aid to the user in identifying changes from the previous edition. Where one or more complete paragraphs have been deleted, the deletion is indicated by a bullet (•) between the paragraphs that remain.

A reference in brackets [ ] following a section or paragraph indicates material that has been extracted from another NFPA document. As an aid to the user, the complete title and edition of the source documents for extracts in mandatory sections of the document are given in Chapter 2 and those for extracts in informational sections are given in Annex B. Editorial changes to extracted material consist of revising references to an appropriate division in this document or the inclusion of the document number with the division number when the reference is to the original document. Requests for interpretations or revisions of extracted text shall be sent to the technical committee responsible for the source document.

Information on referenced publications can be found in Chapter 2 and Annex B.

Chapter 1 Administration

1.1* Scope. This standard shall cover construction, installation, operation, and maintenance of systems for warm air heating and air conditioning, including filters, ducts, and related equipment to protect life and property from fire, smoke, and gases resulting from fire or from conditions having manifestations similar to fire.

1.2 Purpose. This standard shall prescribe provisions based on minimum requirements for safety to life and property.

1.3 Application. This standard shall apply to all systems for the movement of environmental air in structures that serve the following:

(1) One- or two-family dwellings
(2) Spaces not exceeding 708 m^3 (25,000 ft^3) in volume in any occupancy
(3) Buildings of combustible construction over three stories in height shall be in accordance with NFPA 90A.

1.4 Equivalency. Nothing in this standard is intended to prevent the use of systems, methods, or devices of equivalent or superior quality, strength, fire resistance, effectiveness, durability, and safety over those prescribed by this standard.

1.4.1 Technical documentation shall be submitted to the authority having jurisdiction to demonstrate equivalency.

1.4.2 The system, method, or device shall be approved for the intended purpose by the authority having jurisdiction.

Chapter 2 Referenced Publications

2.1 General. The documents or portions thereof listed in this chapter are referenced within this standard and shall be considered part of the requirements of this document.

2.2 NFPA Publications. National Fire Protection Association, 1 Batterymarch Park, Quincy, MA 02169-7471.

NFPA 70, *National Electrical Code®,* 2005 edition.

NFPA 90A, *Standard for the Installation of Air-Conditioning and Ventilating Systems,* 2002 edition.

NFPA 255, *Standard Method of Test of Surface Burning Characteristics of Building Materials,* 2006 edition.

NFPA 701, *Standard Methods of Fire Tests for Flame Propagation of Textiles and Films,* 2004 edition.

2.3 Other Publications.

2.3.1 ANSI/ASHRAE Publication. American National Standards Institute, Inc., 25 West 43rd Street, 4th floor, New York, NY 10036.

ANSI/ASHRAE 15, *Safety Code for Mechanical Refrigeration,* 1998.

2.3.2 ASTM Publications. American Society for Testing and Materials, 100 Barr Harbor Drive, West Conshohocken, PA 19428-2959.

ASTM C 411, *Standard Test Method for Hot-Surface Performance of High-Temperature Thermal Insulation,* 1997.

ASTM D 93, *Standard Test Methods for Flash Point by Pensky-Martens Closed Cup Tester,* 2000.

2.3.3 SMACNA Publications. Sheet Metal and Air Conditioning Contractors' National Association, Inc., 4201 Lafayette Center Drive, Chantilly, VA 20151-1209.

Fibrous Glass Duct Construction Standards, 6th edition, 1992.

HVAC Duct Construction Standards — Metal and Flexible, 2nd edition, 1995.

Installation Standards for Residential Heating and Air Conditioning Systems, 6th edition, 1988.

2.3.4 UL Publications. Underwriters Laboratories Inc., 333 Pfingsten Road, Northbrook, IL 60062-2096.

UL 94, *Standard for Safety Test for Flammability of Plastic Materials for Parts in Devices and Appliances,* 1991.

UL 181, *Standard for Safety Factory-Made Air Ducts and Air Connectors,* 1996.

UL 181A, *Standard for Safety Closure Systems for Use with Rigid Air Ducts and Air Connectors,* 1994.

UL 181B, *Standard for Safety Closure Systems for Use with Flexible Air Ducts and Air Connectors,* 1995.

UL 900, *Standard for Safety Air Filter Units,* 1994.

Copyright National Fire Protection Association
Provided by IHS under license with NFPA
No reproduction or networking permitted without license from IHS
Not for Resale

2.3.5 Other Publication. *Merriam-Webster's Collegiate Dictionary*, 11th edition, Merriam-Webster, Inc., Springfield, MA, 2003.

2.4 References for Extracts in Mandatory Sections.

NFPA 70E, *Standard for Electrical Safety in the Workplace,* 2004 edition.

Chapter 3 Definitions

3.1 General. The definitions contained in this chapter shall apply to the terms used in this standard. Where terms are not defined in this chapter or within another chapter, they shall be defined using their ordinarily accepted meanings within the context in which they are used. *Merriam-Webster's Collegiate Dictionary*, 11th edition, shall be the source for the ordinarily accepted meaning.

3.2 NFPA Official Definitions.

3.2.1* Approved. Acceptable to the authority having jurisdiction.

3.2.2* Authority Having Jurisdiction (AHJ). An organization, office, or individual responsible for enforcing the requirements of a code or standard, or for approving equipment, materials, an installation, or a procedure.

3.2.3* Listed. Equipment, materials, or services included in a list published by an organization that is acceptable to the authority having jurisdiction and concerned with evaluation of products or services, that maintains periodic inspection of production of listed equipment or materials or periodic evaluation of services, and whose listing states that either the equipment, material, or service meets appropriate designated standards or has been tested and found suitable for a specified purpose.

3.2.4 Shall. Indicates a mandatory requirement.

3.2.5 Should. Indicates a recommendation or that which is advised but not required.

3.3 General Definitions.

3.3.1 Accessible. Capable of being removed or exposed without damaging the building structure or finish, or not permanently closed in by the structure or finish of the building. [**70E,** 2004]

3.3.2 Air Filter. A device used to reduce or remove airborne solids from heating, ventilating, and air-conditioning systems.

3.3.3 Central Warm Air Heating System. A heating system consisting of a heat exchanger with an outer casing or jacket, a solar collection system, or an electric heating unit that is connected to a supply system and a return system.

3.3.3.1 ***Forced Air System.*** A central warm air heating system that is equipped with a fan or blower that provides the primary means for circulation of air.

3.3.3.2* ***Gravity System.*** A central warm air heating system through which air is circulated by gravity.

3.3.4 Combustible Material. A material capable of undergoing combustion.

3.3.5 Duct Covering. A material such as adhesive, insulation, banding, coating(s), film, and jackets used to cover the outside surface of a duct, fan casing, or duct plenum.

3.3.6 Duct Lining. A material such as adhesive, insulation, coating(s), and film used to line the inside surface of a duct, fan casing, or duct plenum.

3.3.7 Heat Pump. A refrigeration system arranged to accomplish either heating or heating and cooling.

3.3.8 Noncombustible Material. A material that, in the form in which it is used and under the conditions anticipated, will not ignite, burn, support combustion, or release flammable vapors when subjected to fire or heat. Materials that are reported as passing ASTM E 136, *Standard Test Method for Behavior of Materials in a Vertical Tube Furnace at 750°C,* shall be considered noncombustible materials.

3.3.9 Plenum. A compartment or chamber to which one or more air ducts are connected and that forms part of the air distribution system.

3.3.10 Return System. An assembly of connected ducts, air passages, or plenums and fittings through which air from the space or spaces to be conditioned is conducted back to the heat exchanger.

3.3.11 Rooms Large in Comparison with Size of Equipment. Rooms having a volume equal to at least 12 times the total volume of a furnace or air-conditioning appliance and at least 16 times the total volume of a boiler. The total volume of the appliance is determined from exterior dimensions and is to include fan compartments and burner vestibules, when used. When the actual ceiling height of a room is greater than 2.44 m (8 ft), the volume of a room is figured on the basis of a ceiling height of 2.44 m (8 ft).

3.3.12 Supply Systems. An assembly of connected ducts, air passages, or plenums and fittings through which air is conducted to the space or spaces to be conditioned.

Chapter 4 System Components

4.1 Supply Systems.

4.1.1 Duct Materials.

4.1.1.1* Supply Ducts. Supply ducts shall be made of either of the following materials:

(1) Class 0 or Class 1 rigid or flexible air ducts tested in accordance with UL 181
(2) Sheet metal having a nominal thickness as shown in Table 4.1.1.1

4.1.1.1.1 Supply ducts that are completely encased in not less than 51 mm (2 in.) of concrete in a floor slab shall not be required to meet the requirements of 4.1.1.1.

4.1.1.1.1.1 The supply ducts shall meet the requirements of 4.1.1.1(1) and 4.1.1.1(2) within 0.61 m (2 ft) of the furnace supply plenum and within 0.61 m (2 ft) of a vertical connection to a riser or register.

4.1.1.1.2 Supply ducts for a separate air cooling system, not interconnected to any warm air heating system, serving a single-family dwelling shall not be required to meet the requirements of 4.1.1.1, provided that they are not closer than 0.61 m (2 ft) to any furnace or its supply plenum, boiler, or other heat-producing appliances and that they comply with 4.2.1.1, 4.2.1.3, 4.2.2, 4.2.3, and 4.2.4 as specified for return ducts.

--`,,```,-`-`,,`,,`,`,,`---
Copyright National Fire Protection Association
Provided by IHS under license with NFPA
No reproduction or networking permitted without license from IHS
Not for Resale

Table 4.1.1.1 Nominal Thickness of Sheet Metal Ducts

Diameter or Width		Nominal Thickness		Galvanized Sheet		Aluminum		Tin Plate	
				Minimum Thickness		Thickness		Minimum Weight per Base Box	
mm	in.	mm	in.	mm	in.	mm	in.	kg	lb
Round Ducts and Enclosed Rectangular Ducts									
356 or less	14 or less	0.406	0.016	0.330	0.013	0.406	0.016	61	135
Over 356	Over 14	0.483	0.019	0.406	0.016	0.508	0.020	—	—
Exposed Rectangular Ducts									
356 or less	14 or less	0.483	0.019	0.406	0.016	0.508	0.020	—	—
Over 356	Over 14	0.559	0.022	0.483	0.019	0.584	0.023	—	—

4.1.1.1.3 Vibration isolation connectors in duct systems shall be made of approved flame-retardant fabric or shall consist of sleeve joints with packing of approved noncombustible material.

4.1.1.1.3.1 The flame-retardant fabric shall not exceed 254 mm (10 in.) in length in the direction of airflow.

4.1.1.1.4 A Class 0 or Class 1 rigid or flexible air duct shall not be used as a vertical air duct that is more than two stories in height.

4.1.1.1.5 A Class 0 or Class 1 rigid or flexible air duct shall not be used in an air duct containing air at a temperature in excess of 121°C (250°F).

4.1.1.2* Supply ducts shall be installed in conformance with the following:

(1) The conditions of their listing
(2) SMACNA *Fibrous Glass Duct Construction Standards*
(3) SMACNA *HVAC Duct Construction Standards — Metal and Flexible*
(4) SMACNA *Installation Standards for Residential Heating and Air Conditioning Systems*

4.1.2 Air Connectors. Air connectors are limited-use, flexible air ducts that shall not be required to conform to the requirements for air ducts, provided they meet the following requirements:

(1) Air connectors shall conform to the requirements for Class 0 or Class 1 connectors when tested in accordance with UL 181.
(2) Class 0 or Class 1 air connectors shall not be used in ducts containing air at temperatures in excess of 121°C (250°F).
(3) An air connector run shall not exceed 4.3 m (14 ft) in length.
(4) Air connectors shall not pass through any wall, partition, or enclosure of a vertical shaft that is required to have a fire resistance rating of 1 hour or more.
(5) Air connectors shall not pass through floors.

4.1.3 Furnace Plenums.

4.1.3.1 Furnace plenums shall be constructed of metal that is of the minimum thickness as shown in Table 4.1.1.1.

4.1.3.2 Furnace plenums shall be located a minimum of 914 mm (36 in.) from the heat exchanger measured along the centerline of airflow.

4.1.3.3 Other plenums shall conform to the requirements for supply ducts.

4.1.4 Use of Underfloor Space as a Supply Plenum. Where heated air is discharged downward into an air chamber that forms a plenum of an underfloor space, the following shall apply:

(1) Use of such spaces shall be restricted to one-story portions of single-family dwellings.
(2) Such spaces shall be cleaned of all combustible material, shall be tightly and substantially enclosed, and shall not be used for storage or occupancy.
(3) Accessible abandoned material shall be deemed to be storage and shall not be permitted to remain.
(4) The enclosing material of the underfloor space, including the sidewall insulation and ground cover, shall not be more flammable than 25.4 mm (1 in.) (nominal) wood boards.
(5) Ground cover not complying with the requirement in 4.1.4(4) shall be covered over with at least 51 mm (2 in.) of sand or other noncombustible material.
(6) Access, if provided to such spaces, shall be through an opening in the floor and shall be not greater than 610 mm × 610 mm (24 in. × 24 in.).
(7) Units supplying warm air to such a space shall be equipped with an automatic control that starts the air circulating fan when the air in the unit bonnet reaches a temperature not higher than 66°C (150°F).
(8) The automatic control shall not have the capability to be set higher than 66°C (150°F).
(9) Units supplying warm air to such a space shall be equipped with an approved temperature limit control that limits outlet air temperature to 93°C (200°F).
(10) A noncombustible receptacle shall be placed below each floor type, opening into the air chamber.
(11) Such receptacles shall conform to the following:
    (a) The receptacle shall be suspended securely from the floor members and shall be not more than 457 mm (18 in.) below the floor opening.
    (b) The size of the horizontal projected area of the receptacle shall extend 76 mm (3 in.) beyond the opening.
    (c) The perimeter of the receptacle shall have a vertical lip at least 25.4 mm (1 in.) high at the open sides if it is at the level of the bottom of the joists or 76 mm (3 in.) high if the receptacle is suspended.

Copyright National Fire Protection Association
Provided by IHS under license with NFPA
No reproduction or networking permitted without license from IHS
Not for Resale

(12) Floor registers shall be designed for easy removal in order to provide access for cleaning the receptacles.
(13) Exterior walls and interior stud partitions shall be firestopped at the floor.
(14) Each wall register shall be connected to the air chamber with a duct or boot complying with 4.1.1, 4.1.3.1, and 4.1.3.2.
(15) Supply ducts to the air chamber shall comply with the provisions of 4.1.1, 4.1.2, and 5.1.1.
(16) Supply ducts to the air chamber shall terminate approximately under the center of a room above at a distance of not less than 1.83 m (6 ft) from the plenum chamber.
(17)*Furnaces, boilers, or other heat-producing appliances shall not be installed in such a supply plenum.

4.2 Return Systems.

4.2.1 Duct Materials.

4.2.1.1 Return ducts shall be permitted to be constructed of metal, of 25.4 mm (1 in.) (nominal) wood boards, or of other suitable material, provided that no material more flammable than 25.4 mm (1 in.) (nominal) wood boards shall be used.

4.2.1.2 Portions of return ducts directly above the heating surface or closer than 0.61 m (2 ft) from the outer jacket or casing of the heater shall be constructed in accordance with provisions of 4.1.1 for supply ducts.

4.2.1.3 The interior of combustible ducts shall be lined with noncombustible material at points where there might be danger from incandescent particles dropped through the register or heater, such as directly under floor registers, the bottom of vertical ducts, or heaters having a bottom return.

4.2.2 Duct Openings. In buildings where vertical openings are required to be enclosed by walls or partitions having a fire resistance rating, openings in the enclosures for connections to vertical ducts carrying return air from more than one story shall be protected by approved fire dampers in such openings.

4.2.3 Continuous Ducts.

4.2.3.1 Return air shall be conducted to the appliance through continuous ducts, except as permitted in 4.2.3.2 through 4.2.3.5.

4.2.3.2* Underfloor spaces shall be permitted to be used as plenums for return of air from rooms directly above, provided that such spaces are cleaned of all combustible material, are tightly enclosed, and are not used for storage or occupancy.

4.2.3.3 Furnaces, boilers, and other heat-producing appliances shall not be installed in a return plenum such as that described in 4.2.3.2.

4.2.3.4 Accessible abandoned materials shall be deemed to be storage and shall not be permitted to remain.

4.2.3.5 In a single-story residence, the return air shall be permitted to travel through the first floor living space to the return air inlet on the furnace. *(See 6.3.3.)*

4.2.4 Public Corridors. Public corridors shall not be used as a portion of a supply, return, or exhaust air system serving adjoining areas other than toilet rooms, bathrooms, shower rooms, sink closets, and similar auxiliary spaces opening directly on the corridor.

4.2.4.1 The requirement of 4.2.4 shall not prohibit the use of a corridor as follows:

(1) A source of makeup air through normal leakage around doors for interior exhaust fans in kitchens, appliances, bathrooms, and toilets
(2) A portion of a smoke control system, subject to the approval of the authority having jurisdiction

4.2.5 Negative Pressure from Circulating Fan. The return system and circulating fan shall be arranged so that negative pressure from the circulating fan cannot affect the air supply for combustion or act to draw products of combustion from joints or openings in the furnace or flue.

4.3 Common Requirements.

4.3.1* Duct Coverings and Linings.

4.3.1.1 Duct coverings, duct linings, and tapes used in duct systems shall have a maximum flame spread index of 25 without evidence of continued progressive combustion and a maximum smoke developed index of 50.

4.3.1.2 If coverings and linings are to be applied with adhesives, they shall be tested as applied with such adhesives, or the adhesives used shall have a maximum flame spread index of 25 and a maximum smoke developed index of 50 when in the final dry state.

4.3.1.2.1 The requirements of 4.3.1.1 and 4.3.1.2 shall not apply to duct coverings where they are located entirely outside of a building, do not penetrate a wall or roof, and do not create an exposure hazard.

4.3.1.3 Duct coverings and linings shall not flame, glow, smolder, or smoke when tested in accordance with ASTM C 411 at the temperature to which they are exposed in service. In no case shall the test temperature be below 121°C (250°F).

4.3.1.4 Duct coverings shall not extend through walls or floors required to be firestopped or required to have a fire resistance rating.

4.3.1.5 Duct coverings and linings shall be interrupted at the immediate area of operation of heat sources in a duct system that involves electric resistance, fuel-burning heaters, or heat exchangers connected to solar energy collection systems and shall be in accordance with the manufacturer's instructions.

4.3.1.5.1 Solar energy heat exchangers incapable of creating sustained operating temperatures higher than 93°C (200°F) shall not be required to meet the provision of 4.3.1.5.

4.3.1.6 Duct coverings shall not conceal any service opening.

4.3.1.6.1 Where a label is permanently attached to the covering indicating the exact location of the opening, the requirement of 4.3.1.6 shall not be applied.

4.3.1.7 Appliances such as fan coil units, self-contained air-conditioning units, and furnaces shall be considered to meet the requirements of 4.3.1.1 if they are listed.

4.3.1.8 Unlisted solar energy air distribution system components shall be accompanied by supportive information indicating that their flame spread and smoke developed characteristics are not in excess of those of the duct system to which they are connected.

4.3.2* Joints.

4.3.2.1 Joints and seams shall be fastened and made airtight.

4.3.2.2 Slip joints shall have a lap of at least 25.4 mm (1 in.).

4.3.2.3 Slip joints shall be fastened individually per Figure 4.3.2.3.

Copyright National Fire Protection Association
Provided by IHS under license with NFPA
No reproduction or networking permitted without license from IHS
Not for Resale

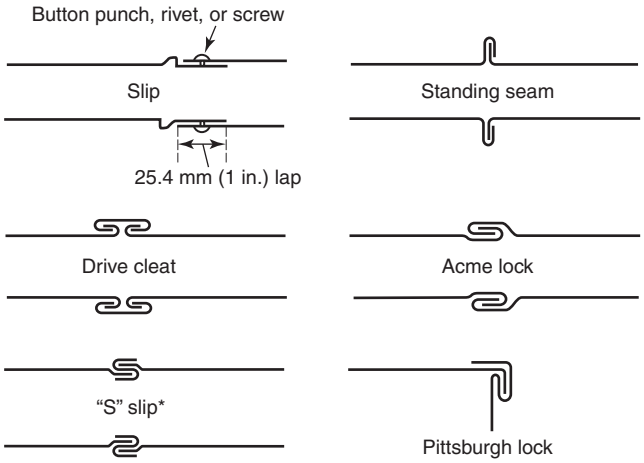

FIGURE 4.3.2.3 Types of Duct Joints.

4.3.2.4 Tape shall be permitted to be used for sealing joints.

4.3.2.4.1 Tape, where exposed to the air in the system, shall not be more combustible than fabric complying with NFPA 701.

4.3.2.5 Closure systems for use with rigid and flexible air ducts tested in accordance with UL 181 shall have been tested and listed in accordance with UL 181A or UL 181B.

4.3.2.6 Closure systems shall be used in conformance with the conditions of the listing.

4.3.3 Duct Hangers.

4.3.3.1 Ducts shall be supported by metal hangers, straps, lugs, or brackets.

4.3.3.2 No nails shall be driven through the duct walls, and no unnecessary holes shall be cut therein.

4.3.4 Protection of Vertical Ducts. Where vertical ducts are installed within closets or rooms, they shall be enclosed with materials equivalent to those used in the closet or room construction. *(See 5.1.3.)*

4.3.5 Registers for Ducts and Plenums. Registers shall be constructed of metal or shall conform with 4.3.5.1 through 4.3.5.4.

4.3.5.1 Registers shall be made of a material classified as 94 HB when tested in accordance with UL 94.

4.3.5.2 Floor registers shall resist, without structural failure, a 90.7 kg (200 lb) concentrated load on a 51 mm (2 in.) diameter disc applied to the most critical area of the exposed face of the register.

4.3.5.2.1 The register shall be at a temperature not less than 74°C (165°F).

4.3.5.2.2 The register shall be supported in accordance with the manufacturer's instructions.

4.3.5.3 Electric or fuel-fired furnace systems shall have at least one register or grille without a closable shutter.

4.3.5.3.1 The duct leading thereto shall be without a damper.

4.3.5.3.2 Dampers and shutters shall be allowed where they cannot shut off more than 80 percent of the duct area.

4.3.5.4 Fittings connecting the registers to the duct system shall be constructed of metal or material that complies with the requirements of Class 0, Class 1, or Class 2 ducts in UL 181.

4.3.6 Pipeless Furnace Registers. Where registers are installed in the floor over the furnace, as in the case of a "pipeless" furnace, the register box shall be of double-walled construction with an air space not less than 102 mm (4 in.).

4.3.6.1 The register box shall be permitted to not meet the requirements of 4.3.6 where the warm air passage is surrounded by a cold air passage.

4.3.7 Use of Concealed Ceiling Spaces as Supply or Return Plenums. Where concealed ceiling spaces are to be used for air chambers or plenums, the following shall apply:

(1) Such installations shall be limited to detached single-family dwellings.
(2) No concealed ceiling space plenum shall serve more than one story of a detached single-family dwelling.
(3) This shall not preclude separate installations on each floor of the detached single-family dwelling.
(4) The concealed space plenum shall be separated from any other concealed spaces.
(5) The plenum or concealed ceiling spaces shall be enclosed completely with construction not more flammable than 25.4 mm (1 in.) (nominal) wood boards.
(6) Plenum or concealed ceiling spaces shall not be used for storage or occupancy.
(7) Accessible abandoned materials shall be deemed to be storage and shall not be permitted to remain.
(8) No ventilating system shall discharge into such plenum or concealed ceiling spaces.
(9) Units supplying such plenum or concealed ceiling spaces shall be designed to limit the temperature of the air discharged into the supply plenum or chamber to 74°C (165°F).
(10) Where units incorporate heating elements, heated surfaces, or combustion chambers that develop temperatures higher than 74°C (165°F), such components shall be designed to prevent direct radiation onto combustible material when the unit is installed.
(11) The installation of the unit supplying such plenum or concealed ceiling spaces shall not produce negative pressure in the attic where the attic is the source of air for combustion for fuel-fired equipment.

Chapter 5 Fire Integrity of Building Construction

5.1 Clearances to Combustible Material.

5.1.1 General. Where ducts are adjacent to plaster on metal lath or to some other noncombustible finish attached to a combustible material, the clearance shall be measured to the combustible material.

5.1.1.1 The clearance shall be measured to the surface of the plaster or other noncombustible finish where a clearance of 51 mm (2 in.) or less is specified above a bonnet or plenum chamber or above supply ducts.

5.1.1.1.1 The requirement of 5.1.1.1 shall not be construed to prohibit the closure of openings with noncombustible material where ducts pass through walls and partitions, as provided in 5.1.2.

Copyright National Fire Protection Association
Provided by IHS under license with NFPA
No reproduction or networking permitted without license from IHS
Not for Resale

5.1.1.2 Where an appliance, ductwork, or a chimney or vent connection is listed for different clearances, the listed clearances shall apply.

5.1.2 Clearances from Horizontal Supply Ducts. Minimum clearances from horizontal supply ducts to combustible materials shall be as follows in 5.1.2.1 through 5.1.2.8.

5.1.2.1 Within a distance of 0.91 m (3 ft) of the plenum of a system classified under A, C, or G of Table 5.1.2.1, the clearance shall be not less than that specified above the bonnet or plenum.

5.1.2.2 Within a distance of 1.83 m (6 ft) of the plenum of a system classified under B or D of Table 5.1.2.1, the clearance shall be not less than 152 mm (6 in.).

Table 5.1.2.1 Clearances to Combustible Material for Furnaces, Boilers, Solar Energy Heating Devices, and Heat Exchangers Installed in Rooms That Are Large in Comparison with Size of Appliance

	Minimum Clearance									
	Above and Sides of Bonnet or Plenum		Jacket Sides and Rear		Front[a]		Projecting Flue Box or Draft Hood		Chimney or Vent Connector	
System/Component	mm	in.	mm	in.	mm	in.	mm	in.	mm	in.
A. Listed automatically fired, forced air or gravity system with 121°C (250°F) temperature limit control										
Burning liquid fuel	51[b]	2[b]	152	6	610	24	457	18	457	18
Burning gas fuel	51[b]	2[b]	152	6	457	18	152	6	152	6
Utilizing electricity	51[b]	2[b]	152	6	457	18	—	—	—	—
B. Unlisted automatically fired, forced air or gravity system with temperature limit control that cannot be set higher than 121°C (250°F)										
Burning liquid fuel	152	6	152	6	610	24	457	18	457	18
Burning gas fuel	152	6	152	6	457	18	457[c]	18[c]	457[c]	18[c]
Utilizing electricity	152	6	152	6	457	18	—	—	—	—
C. Steam or hot water heat exchanger — steam not over 103 kPa (15 psi) pressure and hot water not more than 121°C (250°F)	51	2	51	2	51	2	—	—	—	—
D. Automatically stoker-fired, forced air system equipped with 121°C (250°F) temperature limit control with a barometric draft control[d]										
Burning solid fuel	152	6	152	6	1219	48	457	18	457	18
E. Heating boilers used in central warm air heating systems — steam boiler operating at not over 103 kPa (15 psi) gauge pressure and hot water boilers operating at no more than 121°C (250°F) of the water wall–type or having a jacket or lining of masonry or other satisfactory material										
Burning liquid fuel	152[e]	6[e]	152	6	610	24	457	18	457	18
Burning gas fuel	152[e]	6[e]	152	6	457	18	229[f]	9[f]	229[f]	9[f]
Burning solid fuel	152[e]	6[e]	152	6	1219	48	457	18	457	18
Utilizing electricity	152[e]	6[e]	152	6	457	18	—	—	—	—
F. Furnaces and heating boilers used in central warm air heating systems, other than above										
Burning liquid fuel	457	18	457	18	1219	48	457	18	457	18
Burning gas fuel	457	18	457	18	457	18	457[c]	18[c]	457[c]	18[c]
Burning solid fuel	457	18	457	18	1219	48	457	18	457	18
G. Solar energy heat exchangers operating at a temperature not in excess of 121°C (250°F)	51[g]	2[g]	51[g]	2[g]	51[g]	2[g]	—	—	—	—

[a] Front clearance shall be sufficient for servicing the burner and furnace or boiler.

[b] This clearance shall be permitted to be reduced to 25.4 mm (1 in.) for a listed forced air or gravity furnace equipped with a limit control that limits outlet air temperatures to 93°C (200°F).

[c] For unlisted gas appliances equipped with an approved draft hood, this clearance shall be permitted to be reduced to 229 mm (9 in.).

[d] The barometric draft control shall be operated by draft intensity and permanently set to limit the draft to a maximum intensity of 32.4 Pa (0.13 in.) of water gauge.

[e] This clearance is above top of boiler.

[f] This clearance shall be permitted to be reduced to 152 mm (6 in.) for listed gas burning furnaces and boilers.

[g] This clearance also shall apply to ducts from solar collectors to heat exchangers or thermal storage systems.

Copyright National Fire Protection Association
Provided by IHS under license with NFPA
No reproduction or networking permitted without license from IHS
Not for Resale

5.1.2.3 From ducts of furnaces classified under D of Table 5.1.2.1, the clearance shall be not less than 25.4 mm (1 in.) beyond 1.83 m (6 ft) from the plenum to a point where there is a change in direction of 90 degrees or more.

5.1.2.4 From ducts of furnaces classified under F of Table 5.1.2.1, the following requirements shall apply:

(1) The clearance shall be not less than 457 mm (18 in.) up to 0.91 m (3 ft) from the bonnet or plenum.
(2) The clearance shall be not less than 152 mm (6 in.) for 0.91 m (3 ft) to 1.83 m (6 ft) from the bonnet or plenum.
(3) The clearance shall be not less than 25.4 mm (1 in.) beyond 1.83 m (6 ft) from the bonnet or plenum.

5.1.2.5 No clearance shall be required beyond the distances from the plenum or change in direction specified in 5.1.2.1 and 5.1.2.2.

5.1.2.6 Where a horizontal supply duct passes through or pierces a partition or enclosure constructed of combustible material, within the distances or point of change in direction specified in 5.1.2.1, 5.1.2.2, and 5.1.2.3, the clearance shall be not less than that specified in those paragraphs.

5.1.2.7 The ends of the space providing this clearance shall be permitted to be closed with a thimble and collar, or the wall surfaces shall be extended to the duct with noncombustible building material such as plaster on metal lath. *[See Figure 5.1.2.7(a) and Figure 5.1.2.7(b).]*

5.1.2.8 Separate air-cooling system ducts that are made of materials other than noncombustible material shall be installed with clearances to warm air ducts as required in 5.1.2.1, 5.1.2.2, and 5.1.2.3.

5.1.3 Clearances from Vertical Ducts, Risers, Boots, and Register Boxes.

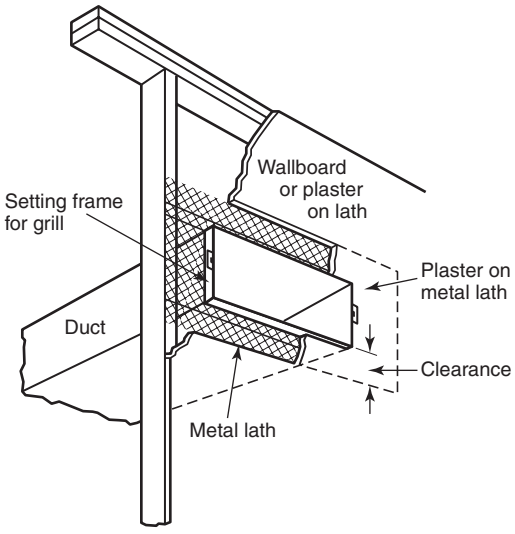

FIGURE 5.1.2.7(a) An Arrangement for Closing Ends of Clearance Space Around a Supply Duct. A Similar Arrangement Can Be Used Where a Duct Continues Through the Partition.

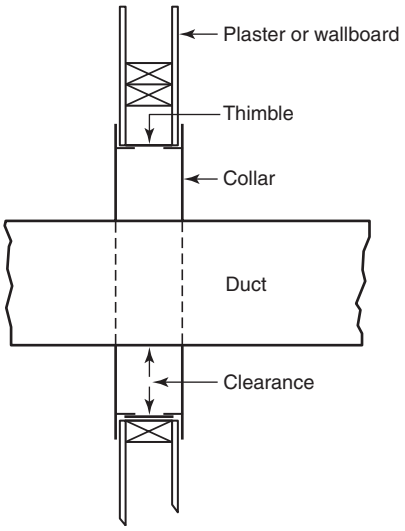

FIGURE 5.1.2.7(b) An Arrangement for Passing Ducts Through Combustible Walls or Partitions as Specified in 5.1.2.5.

5.1.3.1 Where a duct, riser, boot, or box on a system that does not require 457 mm (18 in.) clearance above the supply plenum or bonnet enters a floor, partition, or enclosure constructed of combustible material within the distances from the plenum specified in 5.1.2.1 and 5.1.2.2, the clearance from such a duct, riser, boot, or box shall be not less than the distance required above the furnace bonnet or plenum per Table 5.1.2.1.

5.1.3.1.1 Alternatively, the duct shall change in a direction equivalent to at least two 90-degree turns before entering such floor, partition, or enclosure.

5.1.3.1.2 These requirements shall not apply to pipeless furnaces as specified in 4.3.6.

5.1.3.2 Where a supply duct enters the floor of the first story above that story on which the furnace is located, the space around the duct at such points shall be sealed with noncombustible material.

5.1.3.3 Where a duct, riser, boot, or box on a system that requires 457 mm (18 in.) of clearance above the supply plenum or bonnet enters a floor, partition, or enclosure constructed of combustible material within a horizontal distance of 1.83 m (6 ft) of the furnace, the duct shall be arranged so that heated air travels at least 1.83 m (6 ft) from the closest primary heating surface and changes direction equivalent to at least one 90-degree turn before entering such a floor, partition, or enclosure.

5.1.3.4 Where a duct, riser, boot, or box on a system that requires 457 mm (18 in.) of clearance above the supply plenum or bonnet enters the floor of the first story above that story on which the furnace is situated, the clearance shall be at least 4.76 mm (3⁄16 in.) from all combustible material in the floor construction.

5.1.3.4.1 Where the duct is of double-wall construction with a continuous air space of not less than 4.76 mm (3⁄16 in.) between the inner and outer walls, 5.1.3.4 shall not apply.

5.1.3.5 Where a duct or riser on a system that requires 457 mm (18 in.) of clearance above the supply plenum or bonnet is enclosed in a partition, wall, or concealed space, constructed in whole or in part of combustible material, 5.1.3.5.1, 5.1.3.5.2, or 5.1.3.5.3 shall apply.

Copyright National Fire Protection Association
Provided by IHS under license with NFPA
No reproduction or networking permitted without license from IHS
Not for Resale

5.1.3.5.1 The duct shall be installed with an air space of not less than 4.76 mm (3⁄16 in.) between the duct and combustible material.

5.1.3.5.2 Where a noncombustible insulating covering of the cellular type that is at least 3.18 mm (1⁄8 in.) thick is provided using metal lath and plaster partitions, no air space shall be required except from wood studs.

5.1.3.5.3 The duct shall be double-walled with a continuous air space of not less than 4.76 mm (3⁄16 in.) between the inner and outer walls.

5.1.3.6 Where a register on a system that requires 457 mm (18 in.) of clearance above the supply plenum or bonnet is placed in a floor or wall constructed of combustible material, the register box shall be installed with a clear space of not less than 4.76 mm (3⁄16 in.) between the top and sides of the box and any combustible material.

5.1.4 Clearances from Furnaces, Boilers, Heat Exchangers, Heat Pumps, and Cooling Units.

5.1.4.1 Minimum clearances from furnaces, boilers, heat exchangers and their flue boxes, draft hoods, or chimney or vent connectors that are installed in rooms that are large in comparison with the size of the appliance shall be as specified in 5.1.3.1, unless otherwise provided in 5.1.1 and 5.1.4.2.

5.1.4.2 Heating furnaces and boilers used in residence-type central warm air heating systems shall be permitted to be installed in rooms that are large in comparison with the size of the appliance with clearances reduced as designated in Table 5.1.4.2 where combustible material is protected in the manner specified per Figure 5.1.4.2(a), Figure 5.1.4.2(b), and Figure 5.1.4.2(c).

5.1.4.2.1 The reductions specified in Table 5.1.4.2 shall not apply to installations in alcoves or closets.

5.1.4.3 Furnaces and boilers used in residence-type central warm air heating systems shall not be installed in a confined space such as an alcove or closet.

5.1.4.3.1 Furnaces and boilers specifically approved for such installations, where installed in compliance with their listing and with the clearances from the walls and ceiling of the alcove or closet not less than specified, regardless of the type of construction, shall not be required to meet the provision of 5.1.4.3.

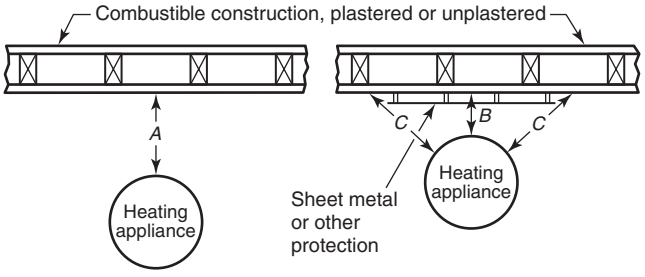

A equals the required clearance with no protection as specified in Table 5.1.2.1.

B equals the reduced clearance permitted in accordance with Table 5.1.4.2.

The protection applied to construction using combustible material shall be required to extend far enough in each direction so that *C* equals *A*.

FIGURE 5.1.4.2(a) Sheet Metal or Other Protection to Reduce Required Clearance from Heating Appliance.

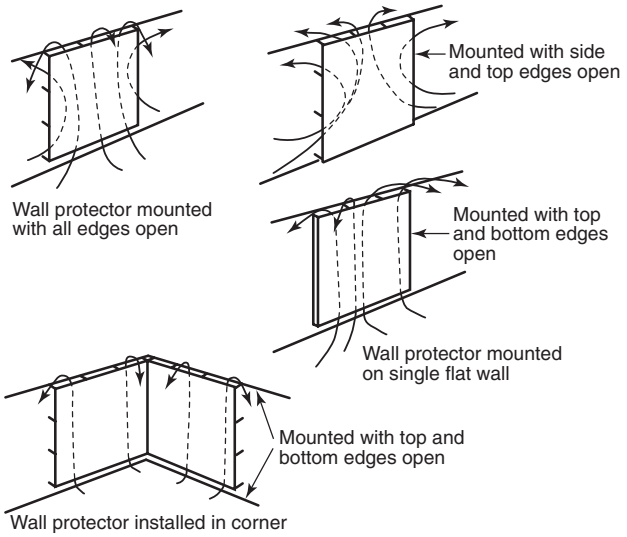

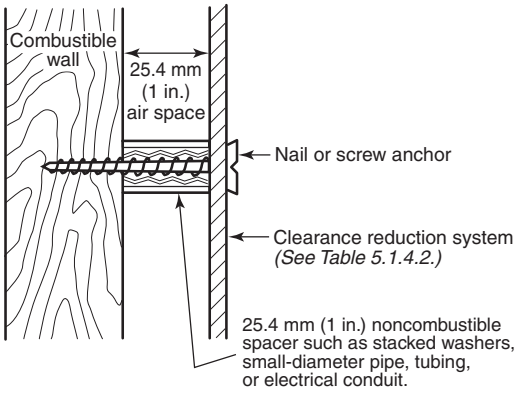

Masonry walls shall be permitted to be attached to combustible walls using wall ties.

Spacers shall not be used directly behind appliance or connector.

FIGURE 5.1.4.2(b) Wall Protector Clearance Reduction System.

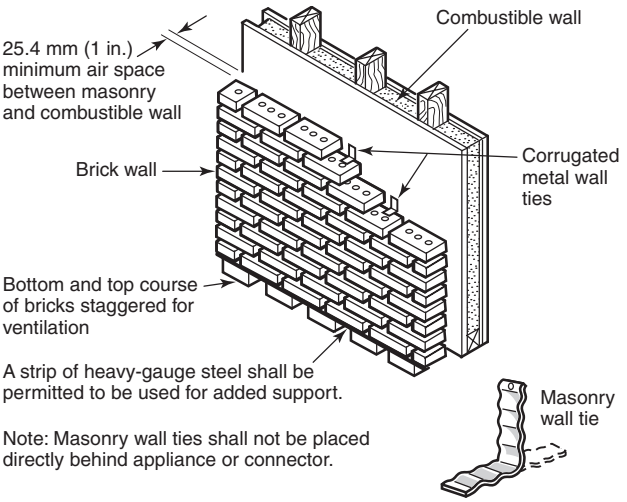

FIGURE 5.1.4.2(c) Masonry Clearance Reduction System.

Copyright National Fire Protection Association
Provided by IHS under license with NFPA
No reproduction or networking permitted without license from IHS
Not for Resale

Table 5.1.4.2 Reduction of Clearances with Specified Forms of Protection

	Required Clearance with No Protection from Appliance and Vent Connector for Single-Wall Metal Pipe																	
	914 mm (36 in.)				457 mm (18 in.)				305 mm (12 in.)				229 mm (9 in.)				152 mm (6 in.)			
	Allowable Clearance with Specified Protection																			
	Above		Sides and Rear		Above		Sides and Rear		Above		Sides and Rear		Above		Sides and Rear		Above		Sides and Rear	
Type of Protection*	mm	in.	mm	in.	mm	in.	mm	in.	mm	in.	mm	in.	mm	in.	mm	in.	mm	in.	mm	in.
89 mm (3½ in.) thick masonry wall without ventilated air space	—	—	610	24	—	—	305	12	—	—	229	9	—	—	152	6	—	—	127	5
12.7 mm (½ in.) insulation board over 25.4 mm (1 in.) glass fiber or mineral wool batts	610	24	457	18	305	12	229	9	229	9	152	6	152	6	127	5	102	4	76	3
0.6 mm (0.024 in.) (24-gauge) sheet metal over 25.4 mm (1 in.) glass fiber or mineral wool batts reinforced with wire on rear face with ventilated air space	457	18	305	12	229	9	152	6	152	6	102	4	127	5	76	3	76	3	76	3
89 mm (3½ in.) thick masonry wall with ventilated air space	—	—	305	12	—	—	152	6	—	—	152	6	—	—	152	6	—	—	152	6
0.6 mm (0.024 in.) (24-gauge) sheet metal with ventilated air space	457	18	305	12	229	9	152	6	152	6	102	4	127	5	76	3	76	3	51	2
12.7 mm (½ in.) insulation board with ventilated air space	457	18	305	12	229	9	152	6	152	6	102	4	127	5	76	3	76	3	76	3
0.6 mm (0.024 in.) (24-gauge) sheet metal with ventilated air space over 0.6 mm (0.024 in.) (24-gauge) sheet metal with ventilated air space	457	18	305	12	229	9	152	6	152	6	102	4	127	5	76	3	76	3	76	3
25.4 mm (1 in.) glass fiber or mineral wool batts sandwiched between two sheets 0.6 mm (0.024 in.) (24-gauge) sheet metal with ventilated air space	457	18	305	12	229	9	152	6	152	6	102	4	127	5	76	3	76	3	76	3

*Applied to and covering all surfaces of combustible material within the distance specified as the required clearance with no protection.

Notes:

(1) Reduction of clearances from combustible materials shall not interfere with combustion air, draft hood clearance and relief, and accessibility of servicing.

(2) All clearances shall be measured from the outer surface of the combustible material to the nearest point on the surface of the appliance, disregarding any intervening protection applied to the combustible material.

(3) Spacers and ties shall be of noncombustible material. No spacer or tie shall be used directly opposite an appliance or connector.

(4) With all clearance reduction systems using a ventilated air space, means for air circulation shall be provided as described. *[See Figures 5.1.4.2(b) and (c).]*

(5) There shall be at least 25.4 mm (1 in.) of clearance between the reduction system and combustible walls and ceilings for reduction systems using ventilated air space.

(6) If a wall protector is mounted on a single flat wall away from corners, adequate air circulation shall be permitted to be provided by leaving only the bottom and top edges, or only the side and top edges, open with at least a 25.4 mm (1 in.) air gap.

(7) Mineral wool batts (blanket or board) shall have a minimum density of 128 kg/m^3 (8 lb/ft^3) and a minimum melting point of 816°C (1500°F).

(8) Insulation material used as part of the clearance reduction system shall have a thermal conductivity of 1.0 (Btu-in.)/(ft-hr-°F) or less.

(9) There shall be at least 25.4 mm (1 in.) between the appliance and the protector. In no case shall the clearance between the appliance and the combustible surface be reduced below that permitted by the table.

(10) All clearances and thicknesses are minimum; larger clearances and thicknesses shall be permitted.

--`,,```,-`-`,,`,,`,`,,`---

Copyright National Fire Protection Association
Provided by IHS under license with NFPA
No reproduction or networking permitted without license from IHS
Not for Resale

5.1.4.4 Cooling units, heat pumps, and equipment involving furnaces, boilers, or electric resistance heating shall not be installed in an attic or in any other space in the building construction that is used as a supply or return plenum.

5.1.4.4.1 Cooling units, heat pumps, and heating equipment shall be permitted to be installed in such a supply or return plenum where specifically approved for such use as a result of tests and listing by an approved testing laboratory.

5.1.4.4.2 Cooling units, heat pumps, or heating equipment shall be installed in accordance with the conditions of such approval.

5.1.4.5 Furnaces, boilers, heat exchangers, heat pumps, solar energy system components, and air-conditioning and cooling units shall be installed to provide accessibility for the following:

(1) Cleaning heating surfaces
(2) Removing and replacing burners, motors, compressors, controls, air filters, draft regulators, and other working parts
(3) Adjusting, cleaning, and lubricating parts requiring such attention

5.2 Firestopping.

5.2.1 Where the installation of ducts in walls, floors, or partitions necessitates the removal of any firestopping, the spaces around the duct at such points where firestopping was removed shall be sealed with noncombustible insulating material.

5.2.2 Where spaces between studs in walls or partitions are used as return ducts, the portions of such spaces so used shall be cut off from all remaining unused portions by tight-fitting stops made of sheet metal or wood that is not less than 51 mm (2 in.) (nominal) thickness. Such spaces shall not be used as a supply duct.

Chapter 6 Equipment, Wiring, and Controls

6.1 Equipment.

6.1.1 Heating Panels.

6.1.1.1 Air chambers that have one or more external surface designed for use as heating panels shall be used only with the following:

(1) Automatically fired gas-burning or oil-burning forced warm air systems equipped with temperature limit controls that limit furnace outlet air temperature to 93°C (200°F)
(2) Forced warm air systems equipped with heat exchangers utilizing steam that cannot exceed 103 kPa (15 lb) gauge pressure or hot water that cannot exceed a temperature of 121°C (250°F)

6.1.1.2 Connection. Heating panels shall be connected to supply and return air ducts that conform to this standard.

6.1.1.3 Construction.

6.1.1.3.1 Where the warm air supply is from a warm air furnace, heating panels shall be enclosed on all sides with material that is wholly noncombustible or that possesses a flame spread classification of not over 25 as determined in accordance with NFPA 255.

6.1.1.3.1.1 This enclosing material shall be attached to the building structure.

6.1.1.3.1.2 Joints and seams shall be airtight.

6.1.1.3.1.3 Braces and hangers inside the chamber shall be noncombustible.

6.1.1.3.2 Where the warm air supply is from a steam or hot water heat exchanger, heating panels either shall comply with 6.1.1.3.1 or shall be enclosed on all sides with material not more flammable than 25.4 mm (1 in.) (nominal) wood boards.

6.1.1.3.2.1 This enclosing material shall be attached to the building structure.

6.1.1.3.2.2 Joints and seams shall be airtight.

6.1.1.3.2.3 No single vertical heating panel shall serve more than one story.

6.1.2 Downflow Systems.

6.1.2.1 Downflow heating equipment shall be designed or equipped so that the outlet air temperature shall not exceed 93°C (200°F).

6.1.2.1.1 For systems installed under the provisions of 4.3.7, the outlet air temperature shall be limited to 74°C (165°F).

6.1.2.2 Equipment shall be designed to prevent unsafe temperature in the event of reverse flow or fan failure.

6.1.3 Air Filters.

6.1.3.1 Air filters shall have either a Class 1 or Class 2 rating in accordance with UL 900.

6.1.3.2 An evaporative cooler containing a combustible filter and water evaporation medium, such as excelsior, shall not be used.

6.1.3.3 Liquid adhesive coatings used on filters shall have a flash point not less than 163°C (325°F) in accordance with ASTM D 93.

6.1.4 Air-Cooling Equipment.

6.1.4.1 Mechanical refrigeration used with air duct systems shall be installed in accordance with ANSI/ASHRAE 15.

6.1.4.2 Evaporative coolers containing a combustible evaporating medium, such as excelsior, shall not be used.

6.1.4.2.1 The requirement in 6.1.4.2 does not preclude the use of evaporation media meeting the requirements of 6.1.3.1.

6.1.5 Furnaces Used with Cooling Units.

6.1.5.1 Furnaces that are combination units in which a refrigeration coil is provided shall have the refrigeration coil located downstream from or parallel to the heating furnace.

6.1.5.1.1 The requirements in 6.1.5.1 shall not apply where the heating furnace is specifically approved for installation downstream from the coil.

6.1.5.2 Where the heating furnace is located upstream from the coil, the coil shall be designed or equipped to prevent the development of excessive temperatures or pressures.

6.1.5.2.1 In those cases where the coil is located parallel to the heating furnace, dampers or other means to control the flow of air shall be provided to prevent chilled air from entering the furnace section.

6.1.5.2.2 Means shall be provided for the disposal of condensate and to prevent dripping of condensate on the heating element.

Copyright National Fire Protection Association
Provided by IHS under license with NFPA
No reproduction or networking permitted without license from IHS
Not for Resale

6.1.5.2.3 Manually operated dampers shall not be required to be provided with means to prevent operation of either unit, provided the damper is in the full heat or cool position.

6.1.5.3 Furnaces, including duct furnaces, shall be permitted to be installed downstream from evaporative coolers or air washers under the following conditions:

(1) The condensate cannot fall into any portion of burners, pilots, or burner carryover arms.
(2) The heating element is made of corrosion-resistant material, such as stainless steel, ceramic-coated steel, or an aluminum-coated steel in which the bond between the steel and the aluminum is an iron–aluminum alloy.

6.1.5.4 Air washers operating with chilled water that delivers air below the dew point of the ambient air at the appliance shall be considered as refrigeration systems.

6.1.5.5 The blower shall be of capacity as to overcome the external static resistance imposed by the combined heating and cooling units at the air throughput required for heating or cooling, whichever is greater.

6.1.6 Boilers Used with Cooling Units.

6.1.6.1 Where the same coil is used for both heating and cooling, valves shall be provided to prevent chilling of the boiler during the operation of the cooling system.

6.1.6.2 Where hot water heating boilers are connected to heating coils located in air-handling units and where they are exposed to refrigerated air circulation, such boiler piping systems shall be equipped with flow control valves or other automatic means to prevent gravity circulation of the boiler water during the cooling cycle.

6.1.7 Heat Pump Systems. Heat pump systems involving units or equipment installed in attics or in a space in the building construction used as a supply or return plenum shall conform to the provisions of 4.3.7 and 5.1.4.

6.1.8 Solar Systems.

6.1.8.1 Solar systems or solar-assisted systems shall be designed, constructed, and controlled so that the air temperature in the supply system shall not exceed 121°C (250°F).

6.1.8.2 A flammable or combustible heat transfer fluid from a solar energy system shall not be used in a heat exchanger located in a duct system.

6.2 Electric Wiring and Equipment.

6.2.1 Electric wiring and equipment shall be installed for safe operation.

6.2.2 Electric wiring and equipment shall be installed in accordance with NFPA 70.

6.2.3 A disconnecting means shall be installed within sight and reach in the ungrounded leads of each power circuit to electrically operated components that are in unprotected locations and in other locations not accessible for service.

6.3 Controls.

6.3.1 Temperature Limit Controls.

6.3.1.1 Temperature limit controls shall be of a listed type.

6.3.1.2 Temperature limit controls shall be such that they cannot be set higher than a specified temperature setting.

6.3.1.3 Temperature limit controls shall be located no more than 0.61 m (2 ft) downstream from the heat exchanger.

6.3.2 Fan Control for Stoker-Fired Furnaces. Where a warm air furnace equipped with a fan to circulate the air is stoker-fired, it also shall be equipped with an automatic overrun control to start the fan when the air in the furnace bonnet or the air at the beginning of the main supply duct at a point not affected by radiated heat reaches a temperature not higher than 93°C (200°F) after the stoker and fan (in its normal operation) have been shut down as a result of a satisfied thermostat.

6.3.2.1 If a manual disconnect is installed in the air-circulating fan electrical circuit, it shall be installed to de-energize both the fan and the stoker simultaneously.

6.3.3* Air for Combustion and Ventilation. Heating appliances shall be installed in a location in which the facilities for ventilation provide for combustion and ventilation under normal conditions of operation and use.

6.3.4 Thermostatically Controlled, Hand-Fired, Solid Fuel–Burning Furnaces. Hand-fired, solid fuel–burning furnaces on which the furnace draft is controlled by a thermostat shall be equipped with the following:

(1) A fail-safe 121°C (250°F) limit control installed not more than 254 mm (10 in.) above the top surface of the heat exchanger in a supply plenum that extends at least 305 mm (12 in.) above the top surface of the heat exchanger
(2)*A barometric draft control operated by draft intensity and permanently set to limit the draft to a maximum intensity of 32.4 Pa (0.13 in.)

6.3.5 Air-Circulating Fan Controls. Where a hand-fired, solid fuel–burning furnace is equipped with a fan to circulate the air, it shall be equipped with fan controls as required for stoker-fired furnaces by 6.3.2.

6.3.6 Accessory Equipment. Material used in the construction of accessory equipment attached to or installed in a supply or return system shall comply with the requirements for the materials of that portion of the system to which it is attached.

6.3.6.1 This requirement shall not preclude the attachment to a plenum or duct of small devices, such as humidifiers, specifically listed for such use.

6.3.6.2 Motors and electrical wiring and equipment shall comply with Section 6.2.

Annex A Explanatory Material

Annex A is not a part of the requirements of this NFPA document but is included for informational purposes only. This annex contains explanatory material, numbered to correspond with the applicable text paragraphs.

A.1.1 For other types of systems, see NFPA 90A. For installation of blower and exhaust systems, see NFPA 91. For removal of smoke and grease-laden vapors from commercial cooking equipment, see NFPA 96.

A.3.2.1 Approved. The National Fire Protection Association does not approve, inspect, or certify any installations, procedures, equipment, or materials; nor does it approve or evaluate testing laboratories. In determining the acceptability of installations, procedures, equipment, or materials, the authority having jurisdiction may base acceptance on compliance

Copyright National Fire Protection Association
Provided by IHS under license with NFPA
No reproduction or networking permitted without license from IHS
Not for Resale

with NFPA or other appropriate standards. In the absence of such standards, said authority may require evidence of proper installation, procedure, or use. The authority having jurisdiction may also refer to the listings or labeling practices of an organization that is concerned with product evaluations and is thus in a position to determine compliance with appropriate standards for the current production of listed items.

A.3.2.2 Authority Having Jurisdiction (AHJ). The phrase "authority having jurisdiction," or its acronym AHJ, is used in NFPA documents in a broad manner, since jurisdictions and approval agencies vary, as do their responsibilities. Where public safety is primary, the authority having jurisdiction may be a federal, state, local, or other regional department or individual such as a fire chief; fire marshal; chief of a fire prevention bureau, labor department, or health department; building official; electrical inspector; or others having statutory authority. For insurance purposes, an insurance inspection department, rating bureau, or other insurance company representative may be the authority having jurisdiction. In many circumstances, the property owner or his or her designated agent assumes the role of the authority having jurisdiction; at government installations, the commanding officer or departmental official may be the authority having jurisdiction.

A.3.2.3 Listed. The means for identifying listed equipment may vary for each organization concerned with product evaluation; some organizations do not recognize equipment as listed unless it is also labeled. The authority having jurisdiction should utilize the system employed by the listing organization to identify a listed product.

A.3.3.3.2 Gravity System. An integral fan or blower that is used only to overcome the internal furnace resistance to airflow is permitted.

A.4.1.1.1 Air duct materials are classified in UL 181 as follows:

(1) Class 0 — Air duct materials having a fire hazard classification of zero (flame spread and smoke developed)
(2) Class 1 — Air duct materials having a flame spread index of not over 25 without evidence of continued progressive combustion and a smoke developed index of not over 50

A.4.1.1.2 See NAIMA *Fibrous Glass Duct Construction Standard* for additional information.

A.4.1.4(17) Additional information can be found in NFPA 31 and NFPA 54.

A.4.2.3.2 Additional information can be found in NFPA 31 and NFPA 54.

A.4.3.1 See NAIMA *Fibrous Glass Duct Liner Standard* for additional information.

A.4.3.2 Additional information can be found in the category "Fabrics" in the UL *Building Materials Directory*.

A.6.3.3 Additional information can be found in NFPA 31 and NFPA 54.

A.6.3.4(2) A fail-safe limit control is a limit control that automatically checks the furnace in the event of power failure or shutoff or that automatically checks the furnace when a temperature of 121°C (250°F) is reached, whether or not power is available.

Annex B Informational References

B.1 Referenced Publications. The documents or portions thereof listed in this annex are referenced within the informational sections of this standard and are not part of the requirements of this document unless also listed in Chapter 2 for other reasons.

B.1.1 NFPA Publications. National Fire Protection Association, 1 Batterymarch Park, Quincy, MA 02169-7471.

NFPA 31, *Standard for the Installation of Oil-Burning Equipment*, 2001 edition.

NFPA 54, *National Fuel Gas Code*, 2006 edition.

NFPA 90A, *Standard for the Installation of Air-Conditioning and Ventilating Systems*, 2002 edition.

NFPA 91, *Standard for Exhaust Systems for Air Conveying of Vapors, Gases, Mists, and Noncombustible Particulate Solids*, 2004 edition.

NFPA 96, *Standard for Ventilation Control and Fire Protection of Commercial Cooking Operations*, 2004 edition.

B.1.2 Other Publications.

B.1.2.1 ASTM Publication. American Society for Testing and Materials, 100 Barr Harbor Drive, West Conshohocken, PA 19428-2959.

ASTM E 136, *Standard Test Method for Behavior of Materials in a Vertical Tube Furnace at 750°C,* 1999.

B.1.2.2 NAIMA Publications. North American Insulation Manufacturers Association, 44 Canal Center Plaza, Suite 310, Alexandria, VA 22314.

Fibrous Glass Duct Construction Standard, 4th edition, 2000.

Fibrous Glass Duct Liner Standard, 1st edition, 1994.

B.1.2.3 UL Publications. Underwriters Laboratories Inc., 333 Pfingsten Road, Northbrook, IL 60062-2096.

UL 181, *Standard for Safety Factory-Made Air Ducts and Air Connectors,* 1996.

UL *Building Materials Directory,* 2002.

B.2 Informational References. (Reserved)

B.3 References for Extracts in Informational Sections. (Reserved)

Copyright National Fire Protection Association
Provided by IHS under license with NFPA
No reproduction or networking permitted without license from IHS
Not for Resale

Index

© 2005 National Fire Protection Association. All Rights Reserved.

The copyright in this index is separate and distinct from the copyright in the document that it indexes. The licensing provisions set forth for the document are not applicable to this index. This index may not be reproduced in whole or in part by any means without the express written permission of NFPA.

-A-

Accessible 5.1.4.5
  Definition 3.3.1
Air connectors 4.1.2
Air-cooling equipment 4.3.1.7, 5.1.4.5, 6.1.4
Air filters 6.1.3
  Definition 3.3.2
Application of standard 1.3
Approved (definition) 3.2.1, A.3.2.1
Authority having jurisdiction (definition) 3.2.2, A.3.2.2

-B-

Boilers
  Clearances from ..... Table 5.1.2.1, 5.1.4
  Cooling units used with 6.1.6
  Installation 5.1.4.5
  Location ..... 4.1.4(17), 4.2.3.3, 5.1.4.2 to 5.1.4.5, A.4.1.4(17)
  Ventilation for 6.3.3
Boots, clearances from 5.1.3.1, 5.1.3.3, 5.1.3.4
Building construction, fire integrity of ..... Chap. 5

-C-

Central warm air heating systems; .....*see also* specific systems
  Definition 3.3.3
Clearance reduction systems 5.1.4.2
Clearances to combustible materials ..... 5.1, Table 5.1.2.1
  Boilers 5.1.4
  Boots 5.1.3.1, 5.1.3.3, 5.1.3.4
  Cooling units 5.1.4.4, 5.1.4.5
  Furnaces 5.1.4
  Heat exchangers 5.1.4.1, 5.1.4.5
  Heat pumps 5.1.4.4, 5.1.4.5
  Horizontal supply ducts ..... 5.1.2, Figs. 5.1.2.7(a) to (b)
  Register boxes 5.1.3.1, 5.1.3.3, 5.1.3.4, 5.1.3.6
  Risers ..... 5.1.3.1, 5.1.3.3 to 5.1.3.5
  Vertical ducts ..... 5.1.3.1 to 5.1.3.5
Combustible materials
  Clearances to 5.1
  Definition 3.3.4
Confined spaces, furnace/boiler installation in 5.1.4.3
Connection, equipment 6.1.1.2
Construction
  Building ..... Chap. 5
  Equipment 6.1.1.3
Controls ..... 6.3, A.6.3.4(2)
  Accessory equipment 6.3.6
  Fail-safe limit ..... 6.3.4(1)
  Fan, circulating ..... 4.1.4(7), 4.1.4(8), 6.3.2, 6.3.5
  Temperature limit ..... 4.1.4(9), 6.3.1
  Thermostat ..... 6.3.4, A.6.3.4(2)
Cooling units
  Boilers used with 6.1.6
  Clearances from 5.1.4.4, 5.1.4.5
  Evaporative coolers 6.1.3.2, 6.1.4.2, 6.1.5.3
  Furnaces used with 6.1.5
Corridors, public 4.2.4

-D-

Definitions ..... Chap. 3
Downflow systems 6.1.2
Duct coverings 4.3.1, A.4.3.1
  Definition 3.3.5
Duct hangers 4.3.3
Duct linings 4.3.1, A.4.3.1
  Definition 3.3.6
Ducts
  Continuous 4.2.3, A.4.2.3.2
  Horizontal supply, clearances from 5.1.2
  Installation 4.1.1.2, A.4.1.1.2
  Joints 4.3.2, A.4.3.2
  Materials 4.1.1, 4.2.1, A.4.1.1.1, A.4.1.1.2
  Openings 4.2.2
  Registers for 4.3.5
  Return ..... 4.2.1 to 4.2.3, A.4.2.3.2
  Supply 4.1.1, 5.1.2, A.4.1.1.1, A.4.1.1.2
  Vertical
    Clearances from ..... 5.1.3.1 to 5.1.3.5
    Protection of 4.3.4

-E-

Electric wiring and equipment 6.2
Equipment ..... 6.1; *see also* Boilers; Furnaces; Heat pumps; Solar systems
  Accessory 6.3.6
  Air-cooling 4.3.1.7, 5.1.2.8, 5.1.4.5, 6.1.4
  Air filters 6.1.3
    Definition 3.3.2
  Downflow systems 6.1.2
  Electrical 6.2
  Heating panels 6.1.1
Equivalency to standard 1.4

-F-

Fans, circulating
  Controls ..... 4.1.4(7), 4.1.4(8), 6.3.2, 6.3.5
  Negative pressure from 4.2.5
Filters, air 6.1.3
  Definition 3.3.2
Fire dampers 4.2.2
Firestops ..... 4.1.4(13), 4.3.1.4, 5.2
Forced air systems ..... Table 5.1.2.1, 6.1.1.1
  Definition 3.3.3.1
Furnaces
  Clearances from ..... Table 5.1.2.1, 5.1.4
  Cooling units used with 6.1.5
  Duct coverings and linings 4.3.1.7
  Installation 5.1.4.5
  Location ..... 4.1.4(7), 4.2.3.3, 5.1.4.2 to 5.1.4.5, A.4.1.4(17)
  Pipeless 4.3.6, 5.1.3.1.2
  Registers for 4.3.5, 4.3.6
  Solid fuel–burning ..... 6.3.4, 6.3.5, A.6.3.4(2)
  Stoker-fired ..... Table 5.1.2.1, 6.3.2
  Ventilation for 6.3.3

-G-

Gravity systems ..... Table 5.1.2.1
  Definition 3.3.3.2, A.3.3.3.2

Copyright National Fire Protection Association
Provided by IHS under license with NFPA
No reproduction or networking permitted without license from IHS
Not for Resale

-H-

Heat exchangers
Clearances from ..... Table 5.1.2.1, 5.1.4.1, 5.1.4.5
Duct coverings and linings 4.3.1.5
Solar energy system transfer fluids and 6.1.8.2
Thermostat controls ..... 6.3.4(1)
Heating panels 6.1.1
Heat pumps 6.1.7
Clearances from 5.1.4.4, 5.1.4.5
Definition 3.3.7

-J-

Joints, duct 4.3.2, A.4.3.2

-L-

Listed (definition) 3.2.3, A.3.2.3

-N-

Noncombustible materials
Definition 3.3.8
Uses 4.1.1.1.3, 4.2.1.3, 5.1.2.7, 5.1.3.2, 5.2.1

-P-

Plenums
Clearances ..... 5.1.2.1 to 5.1.2.5, 5.1.3.1
Concealed ceiling spaces used as 4.3.7
Definition 3.3.9
Equipment installed in 5.1.4.4
Furnace 4.1.3
Registers for 4.3.5
Thermostat controls ..... 6.3.4(1)
Underfloor space used as
Return plenums ..... 4.2.3.2), A.4.2.3.2
Supply plenums ..... 4.1.4, A.4.1.4(17)
Pumps, heat .....*see* Heat pumps
Purpose of standard 1.2

-R-

References ..... Chap. 2, Annex B

Registers
Clearances from 5.1.3.1, 5.1.3.3, 5.1.3.4, 5.1.3.6
Duct and plenum 4.3.5
Pipeless furnace 4.3.6
Underfloor supply plenums ..... 4.1.4(12), 4.1.4(14)
Return systems 4.2, A.4.2.3.2
Accessory equipment 6.3.6
Concealed ceiling spaces used as plenums 4.3.7
Definition 3.3.10
Equipment installed in 5.1.4.4, 6.1.7
Firestopping 5.2.2
Heating panels connected to 6.1.1.2
Risers, clearances from ..... 5.1.3.1, 5.1.3.3 to 5.1.3.5
Rooms large in comparison with size of equipment .... Table 5.1.2.1, 5.1.4.1, 5.1.4.2
Definition 3.3.11

-S-

Scope of standard 1.1, A.1.1
Shall (definition) 3.2.4
Should (definition) 3.2.5
Solar systems 5.1.4.5, 6.1.8
Clearances from ..... Table 5.1.2.1
Duct coverings and linings 4.3.1.5, 4.3.1.8
Supply systems ..... 4.1, A.4.1.1.1, A.4.1.1.2, A.4.1.4(17)
Accessory equipment 6.3.6
Clearances 5.1.3
Closing ends of ..... 5.1.2.7, Fig. 5.1.2.7(a)
Horizontal supply ducts 5.1.2
Concealed ceiling spaces used as plenums 4.3.7
Definition 3.3.12
Equipment installed in 5.1.4.4, 6.1.7
Heating panels connected to 6.1.1.2
Thermostat controls ..... 6.3.4(1)

-V-

Ventilation, air for 6.3.3

-W-

Wiring 6.2

Copyright National Fire Protection Association
Provided by IHS under license with NFPA
No reproduction or networking permitted without license from IHS
Not for Resale

Sequence of Events Leading to Publication of an NFPA Committee Document

Call goes out for proposals to amend existing document or for recommendations on new document.

▼

Committee meets to act on proposals, to develop its own proposals, and to prepare its report.

▼

Committee votes on proposals by letter ballot. If two-thirds approve, report goes forward. Lacking two-thirds approval, report returns to committee.

▼

Report — *Report on Proposals* (ROP) — is published for public review and comment.

▼

Committee meets to act on each public comment received.

▼

Committee votes on comments by letter ballot. If two-thirds approve, supplementary report goes forward. Lacking two-thirds approval, supplementary report returns to committee.

▼

Supplementary report — *Report on Comments* (ROC) — is published for public review.

▼

NFPA membership meets (Annual or Fall Meeting) and acts on committee report (ROP or ROC).

▼

Committee votes on any amendments to report approved at NFPA Annual or Fall Meeting.

▼

Appeals to Standards Council on Association action must be filed within 20 days of the NFPA Annual or Fall Meeting.

▼

Standards Council decides, based on all evidence, whether or not to issue standard or to take other action, including upholding any appeals.

Committee Membership Classifications

The following classifications apply to Technical Committee members and represent their principal interest in the activity of the committee.

M *Manufacturer:* A representative of a maker or marketer of a product, assembly, or system, or portion thereof, that is affected by the standard.

U *User:* A representative of an entity that is subject to the provisions of the standard or that voluntarily uses the standard.

I/M *Installer/Maintainer:* A representative of an entity that is in the business of installing or maintaining a product, assembly, or system affected by the standard.

L *Labor:* A labor representative or employee concerned with safety in the workplace.

R/T *Applied Research/Testing Laboratory:* A representative of an independent testing laboratory or independent applied research organization that promulgates and/or enforces standards.

E *Enforcing Authority:* A representative of an agency or an organization that promulgates and/or enforces standards.

I *Insurance:* A representative of an insurance company, broker, agent, bureau, or inspection agency.

C *Consumer:* A person who is, or represents, the ultimate purchaser of a product, system, or service affected by the standard, but who is not included in the *User* classification.

SE *Special Expert:* A person not representing any of the previous classifications, but who has a special expertise in the scope of the standard or portion thereof.

NOTES:

1. "Standard" connotes code, standard, recommended practice, or guide.
2. A representative includes an employee.
3. While these classifications will be used by the Standards Council to achieve a balance for Technical Committees, the Standards Council may determine that new classifications of members or unique interests need representation in order to foster the best possible committee deliberations on any project. In this connection, the Standards Council may make such appointments as it seems appropriate in the public interest, such as the classification of "Utilities" in the National Electrical Code Committee.
4. Representatives of subsidiaries of any group are generally considered to have the same classification as the parent organization.

--`,,```,,,-`-`,,`,,`,`,,`---

Copyright National Fire Protection Association
Provided by IHS under license with NFPA
No reproduction or networking permitted without license from IHS

Not for Resale

NFPA Technical Committee Document Proposal Form

Note: All proposals must be received by 5:00 p.m. EST/EDST on the published proposal closing date.

For further information on the standards-making process, please contact Codes and Standards Administration at 617-984-7249. For technical assistance, please call NFPA at 617-770-3000.

FOR OFFICE USE ONLY
Log #: _____
Date Rec'd: _____

Please indicate in which format you wish to receive your ROP/ROC: ☐ **CD ROM** ☐ **paper** ☐ **download**
(Note: In choosing the download option you intend to view the ROP/ROC from our Website. No copy will be sent to you.)

Date 12/18/02 **Name** John B. Smith **Telephone** 617-555-1212
Company _____
Address 9 Seattle St. **City** Seattle **State** WA **Zip** 02255
Please indicate organization represented (if any) Fire Marshals Assn. of North America

1. **a) NFPA Document Title** National Fire Alarm Code
   b) NFPA No. & Edition NFPA 72, 2002 ed. **c) Section/Paragraph** 4.4.7.1.1

2. **Proposal Recommends:** *(check one)* ☐ **new text** ☐ **revised text** ☒ **deleted text**

3. **Proposal.** *(Include proposed new or revised wording, or identification of wording to be deleted.)* Note: Proposed text should be in legislative format, that is, use underscore to denote wording to be inserted (inserted wording) and strike-through to denote wording to be deleted (~~deleted wording~~). Delete exception.

4. **Statement of Problem and Substantiation for Proposal.** Note: State the problem that will be resolved by your recommendation. Give the specific reason for your proposal including copies of tests, research papers, fire experience, etc. If more than 200 words, it may be abstracted for publication. A properly installed and maintained system should be free of ground faults. The occurrence of one or more ground faults should be required to cause a "trouble" signal because it indicates a condition that could contribute to future malfunction of the system. Ground fault protection has been widely available on these systems for years and its cost is negligible. Requiring it on all systems will promote better installations, maintenance and reliability.

5. ☒ **This Proposal is Original Material.** Note: Original material is considered to be the submitter's own idea based on or as a result of his/her own experience, thought, or research and, to the best of his/her knowledge, is not copied from another source.

   ☐ **This Proposal is Not Original Material; Its Source** ***(if known)*** **is as Follows:** _____

Sample

I hereby grant the NFPA all and full rights in copyright to this proposal, and I understand that I acquire no rights in any publication of NFPA in which this proposal in this or another similar or analogous form is used.

Signature ***(Required)*** John B. Smith

PLEASE USE SEPARATE FORM FOR EACH PROPOSAL • NFPA FAX (617) 770-3500

Mail to: Secretary, Standards Council • NFPA • 1 Batterymarch Park • PO Box 9101 • Quincy, MA 02269-9101

Copyright National Fire Protection Association
Provided by IHS under license with NFPA
No reproduction or networking permitted without license from IHS
Not for Resale

NFPA Technical Committee Document Proposal Form

Note: All proposals must be received by 5:00 p.m. EST/EDST on the published proposal closing date.

For further information on the standards-making process, please contact Codes and Standards Administration at 617-984-7249. For technical assistance, please call NFPA at 617-770-3000.

FOR OFFICE USE ONLY
Log #: _____
Date Rec'd: _____

Please indicate in which format you wish to receive your ROP/ROC: ☐ **CD ROM** ☐ **paper** ☐ **download**
(Note: In choosing the download option you intend to view the ROP/ROC from our Website. No copy will be sent to you.)

Date _____ **Name** _____ **Telephone** _____
Company _____
Address _____ **City** _____ **State** _____ **Zip** _____
Please indicate organization represented (if any) _____

1. **a) NFPA Document Title** _____
   b) NFPA No. & Edition _____ **c) Section/Paragraph** _____

2. **Proposal Recommends:** *(check one)* ☐ **new text** ☐ **revised text** ☐ **deleted text**

3. **Proposal.** *(Include proposed new or revised wording, or identification of wording to be deleted.)* Note: Proposed text should be in legislative format, that is, use underscore to denote wording to be inserted (inserted wording) and strike-through to denote wording to be deleted (~~deleted wording~~). _____

4. **Statement of Problem and Substantiation for Proposal.** Note: State the problem that will be resolved by your recommendation. Give the specific reason for your proposal including copies of tests, research papers, fire experience, etc. If more than 200 words, it may be abstracted for publication. _____

5. ☐ **This Proposal is Original Material.** Note: Original material is considered to be the submitter's own idea based on or as a result of his/her own experience, thought, or research and, to the best of his/her knowledge, is not copied from another source.

   ☐ **This Proposal is Not Original Material; Its Source *(if known)* is as Follows:** _____

I hereby grant the NFPA all and full rights in copyright to this proposal, and I understand that I acquire no rights in any publication of NFPA in which this proposal in this or another similar or analogous form is used.

Signature *(Required)* _____

PLEASE USE SEPARATE FORM FOR EACH PROPOSAL • NFPA FAX (617) 770-3500

Mail to: Secretary, Standards Council • NFPA • 1 Batterymarch Park • PO Box 9101 • Quincy, MA 02269-9101

--`,,```,,-`-`,,`,,`,`,,`---

Copyright National Fire Protection Association
Provided by IHS under license with NFPA
No reproduction or networking permitted without license from IHS

Not for Resale