NFPA® 820

Standard for Fire Protection in Wastewater Treatment and Collection Facilities

2008 Edition

NFPA, 1 Batterymarch Park, Quincy, MA 02169-7471
An International Codes and Standards Organization

Copyright National Fire Protection Association
Provided by IHS under license with NFPA
No reproduction or networking permitted without license from IHS
Not for Resale

IMPORTANT NOTICES AND DISCLAIMERS CONCERNING NFPA DOCUMENTS

NOTICE AND DISCLAIMER OF LIABILITY CONCERNING THE USE OF NFPA DOCUMENTS

NFPA codes, standards, recommended practices, and guides, of which the document contained herein is one, are developed through a consensus standards development process approved by the American National Standards Institute. This process brings together volunteers representing varied viewpoints and interests to achieve consensus on fire and other safety issues. While the NFPA administers the process and establishes rules to promote fairness in the development of consensus, it does not independently test, evaluate, or verify the accuracy of any information or the soundness of any judgments contained in its codes and standards.

The NFPA disclaims liability for any personal injury, property or other damages of any nature whatsoever, whether special, indirect, consequential or compensatory, directly or indirectly resulting from the publication, use of, or reliance on this document. The NFPA also makes no guaranty or warranty as to the accuracy or completeness of any information published herein.

In issuing and making this document available, the NFPA is not undertaking to render professional or other services for or on behalf of any person or entity. Nor is the NFPA undertaking to perform any duty owed by any person or entity to someone else. Anyone using this document should rely on his or her own independent judgment or, as appropriate, seek the advice of a competent professional in determining the exercise of reasonable care in any given circumstances.

The NFPA has no power, nor does it undertake, to police or enforce compliance with the contents of this document. Nor does the NFPA list, certify, test or inspect products, designs, or installations for compliance with this document. Any certification or other statement of compliance with the requirements of this document shall not be attributable to the NFPA and is solely the responsibility of the certifier or maker of the statement.

Copyright National Fire Protection Association
Provided by IHS under license with NFPA
No reproduction or networking permitted without license from IHS
Not for Resale

ADDITIONAL NOTICES AND DISCLAIMERS

Updating of NFPA Documents

Users of NFPA codes, standards, recommended practices, and guides should be aware that these documents may be superseded at any time by the issuance of new editions or may be amended from time to time through the issuance of Tentative Interim Amendments. An official NFPA document at any point in time consists of the current edition of the document together with any Tentative Interim Amendments and any Errata then in effect. In order to determine whether a given document is the current edition and whether it has been amended through the issuance of Tentative Interim Amendments or corrected through the issuance of Errata, consult appropriate NFPA publications such as the National Fire Codes® Subscription Service, visit the NFPA website at www.nfpa.org, or contact the NFPA at the address listed below.

Interpretations of NFPA Documents

A statement, written or oral, that is not processed in accordance with Section 6 of the Regulations Governing Committee Projects shall not be considered the official position of NFPA or any of its Committees and shall not be considered to be, nor be relied upon as, a Formal Interpretation.

Patents

The NFPA does not take any position with respect to the validity of any patent rights asserted in connection with any items which are mentioned in or are the subject of NFPA codes, standards, recommended practices, and guides, and the NFPA disclaims liability for the infringement of any patent resulting from the use of or reliance on these documents. Users of these documents are expressly advised that determination of the validity of any such patent rights, and the risk of infringement of such rights, is entirely their own responsibility.

NFPA adheres to applicable policies of the American National Standards Institute with respect to patents. For further information contact the NFPA at the address listed below.

Law and Regulations

Users of these documents should consult applicable federal, state, and local laws and regulations. NFPA does not, by the publication of its codes, standards, recommended practices, and guides, intend to urge action that is not in compliance with applicable laws, and these documents may not be construed as doing so.

Copyrights

This document is copyrighted by the NFPA. It is made available for a wide variety of both public and private uses. These include both use, by reference, in laws and regulations, and use in private self-regulation, standardization, and the promotion of safe practices and methods. By making this document available for use and adoption by public authorities and private users, the NFPA does not waive any rights in copyright to this document.

Use of NFPA documents for regulatory purposes should be accomplished through adoption by reference. The term "adoption by reference" means the citing of title, edition, and publishing information only. Any deletions, additions, and changes desired by the adopting authority should be noted separately in the adopting instrument. In order to assist NFPA in following the uses made of its documents, adopting authorities are requested to notify the NFPA (Attention: Secretary, Standards Council) in writing of such use. For technical assistance and questions concerning adoption of NFPA documents, contact NFPA at the address below.

For Further Information

All questions or other communications relating to NFPA codes, standards, recommended practices, and guides and all requests for information on NFPA procedures governing its codes and standards development process, including information on the procedures for requesting Formal Interpretations, for proposing Tentative Interim Amendments, and for proposing revisions to NFPA documents during regular revision cycles, should be sent to NFPA headquarters, addressed to the attention of the Secretary, Standards Council, NFPA, 1 Batterymarch Park, P.O. Box 9101, Quincy, MA 02269-9101.

For more information about NFPA, visit the NFPA website at www.nfpa.org.

Copyright National Fire Protection Association
Provided by IHS under license with NFPA
No reproduction or networking permitted without license from IHS
Not for Resale

Copyright © 2007 National Fire Protection Association®. All Rights Reserved.

NFPA® 820

Standard for

Fire Protection in Wastewater Treatment and Collection Facilities

2008 Edition

This edition of NFPA 820, *Standard for Fire Protection in Wastewater Treatment and Collection Facilities,* was prepared by the Technical Committee on Wastewater Treatment Plants. It was issued by the Standards Council on June 4, 2007, with an effective date of June 24, 2007, and supersedes all previous editions.

This edition of NFPA 820 was approved as an American National Standard on June 24, 2007.

Origin and Development of NFPA 820

The Committee on Wastewater Treatment Plants was organized in 1983 to have primary responsibility for documents on safeguarding against the fire and explosion hazards specific to wastewater treatment plants and associated collection systems. This document includes the hazard classification of specific areas and processes. The need to develop NFPA 820 was based on fire or explosion incidents that, while infrequent, are relatively severe when they do occur. Initial work on the document was begun early in 1985 and resulted in the first edition being issued in 1990. Extensive changes were made between the first edition and the 1992 edition, with the most notable revision being the document title, which was changed from *Recommended Practice for Fire Protection in Wastewater Treatment Plants* to *Recommended Practice for Fire Protection in Wastewater Treatment and Collection Facilities*. In addition, the document scope was revised to include storm sewer systems and their appurtenances.

In 1995 the document was changed from a recommended practice to a standard, which contains mandatory requirements. This was done because NFPA 820 was widely referenced by various jurisdictions.

The 1999 edition of NFPA 820 was changed to include some editorial corrections and to make the document more enforceable. The definitions were also modified to conform to NFPA's *Manual of Style*.

For the 2003 edition, the entire document was reformatted to conform to the *Manual of Style for NFPA Technical Committee Documents*. Definitions were revised to conform to the NFPA *Glossary of Terms*.

The 2008 edition includes guidance on waste gas burners and enclosed aeration basins. Definitions have been coordinated with the NFPA *Glossary of Terms*.

NFPA and National Fire Protection Association are registered trademarks of the National Fire Protection Association, Quincy, Massachusetts, 02169.

Copyright National Fire Protection Association
Provided by IHS under license with NFPA
No reproduction or networking permitted without license from IHS
Not for Resale

Technical Committee on Wastewater Treatment Plants

Garr M. Jones, *Chair*
Brown and Caldwell, CA [SE]

John R. Anderson, Marshfield, MA [SE]
A. W. Ballard, Crouse-Hinds, NY [M]
Rep. National Electrical Manufacturers Association
John N. Harrell, Wilson & Company, Inc., MO [SE]
Gary Hewitt, The Gorman-Rupp Company, OH [M]
Rep. Water & Wastewater Equipment Manufacturers Association, Inc.
Linda Leong San Francisco Public Utilities Commission, CA [U]
Glen E. McGinley, II State of Ohio, OH [E]
James F. Wheeler, U.S. Environmental Protection Agency, DC [E]

Alternates

Mark Kreinbihl, The Gorman-Rupp Company, OH [M]
(Alt. to G. Hewitt)
Edwin C. Lamb, National Clay Pipe Institute, AZ [M]
(Voting Alt. to NCPI Rep.)

David R. Hague, NFPA Staff Liaison

This list represents the membership at the time the Committee was balloted on the final text of this edition. Since that time, changes in the membership may have occurred. A key to classifications is found at the back of the document.

NOTE: Membership on a committee shall not in and of itself constitute an endorsement of the Association or any document developed by the committee on which the member serves.

Committee Scope: This Committee shall have primary responsibility for documents on criteria for safeguarding against the fire and explosion hazards specific to wastewater treatment plants and associated collection systems, including the hazard classification of specific areas and processes.

Copyright National Fire Protection Association
Provided by IHS under license with NFPA
No reproduction or networking permitted without license from IHS
Not for Resale

Contents

Chapter 1 Administration **820–** 4
1.1 Scope **820–** 4
1.2 Purpose **820–** 4
1.3 Application **820–** 4
1.4 Retroactivity **820–** 5
1.5 Equivalency **820–** 5
1.6 Units and Formulas **820–** 5
1.7 Document Organization **820–** 5
1.8 *National Electrical Code*® Criteria **820–** 5

Chapter 2 Referenced Publications **820–** 5
2.1 General **820–** 5
2.2 NFPA Publications **820–** 5
2.3 Other Publications **820–** 6
2.4 References for Extracts in Mandatory Sections **820–** 6

Chapter 3 Definitions **820–** 6
3.1 General **820–** 6
3.2 NFPA Official Definitions **820–** 6
3.3 General Definitions **820–** 6

Chapter 4 Collection Systems **820–**10
4.1 General **820–**10
4.2 Design and Construction **820–**10

Chapter 5 Liquid Stream Treatment Processes **820–**18
5.1 General **820–**18
5.2 Design and Construction **820–**18

Chapter 6 Solids Treatment Processes **820–**28
6.1 General **820–**28
6.2 Design and Construction **820–**28

Chapter 7 Fire and Explosion Prevention and Protection **820–**37
7.1 Scope **820–**37
7.2 Fire Protection Measures **820–**37
7.3 Fire Detection and Alarm Systems **820–**37
7.4 Combustible Gas Detection **820–**37
7.5 Ventilation Monitoring and Signaling Systems **820–**38
7.6 Laboratories **820–**38
7.7 Special Fire Protection Measures **820–**38

Chapter 8 Materials of Construction **820–**38
8.1 General **820–**38
8.2 Materials Selection **820–**38
8.3 Applications **820–**39

Chapter 9 Ventilation **820–**40
9.1 General **820–**40
9.2 Installation **820–**40
9.3 Ventilation Criteria **820–**41

Chapter 10 Administrative Controls **820–**42
10.1 General **820–**42
10.2 Management Policy and Direction **820–**42
10.3 Fire Risk Evaluation **820–**42
10.4 Fire Prevention Program **820–**42
10.5 Water-Based Fire Protection Systems **820–**42
10.6 Other Fire Protection and Detection Systems **820–**42
10.7 Impairments **820–**42
10.8 Fire Emergency Plan **820–**42
10.9 Fire Brigades **820–**43
10.10 Polychlorinated Biphenyls **820–**43
10.11 Fire and Explosion Prevention **820–**43

Annex A Explanatory Material **820–**43

Annex B Wastewater Treatment Processes **820–**50

Annex C Selection of Collection System Materials **820–**53

Annex D Chemical and Fuel Fire/Explosion Hazards **820–**54

Annex E List of Associations with Their Abbreviations **820–**58

Annex F Informational References **820–**58

Index **820–**60

Copyright National Fire Protection Association
Provided by IHS under license with NFPA
No reproduction or networking permitted without license from IHS
Not for Resale

NFPA 820

Standard for

Fire Protection in Wastewater Treatment and Collection Facilities

2008 Edition

IMPORTANT NOTE: This NFPA document is made available for use subject to important notices and legal disclaimers. These notices and disclaimers appear in all publications containing this document and may be found under the heading "Important Notices and Disclaimers Concerning NFPA Documents." They can also be obtained on request from NFPA or viewed at www.nfpa.org/disclaimers.

NOTICE: An asterisk (*) following the number or letter designating a paragraph indicates that explanatory material on the paragraph can be found in Annex A.

Changes other than editorial are indicated by a vertical rule beside the paragraph, table, or figure in which the change occurred. These rules are included as an aid to the user in identifying changes from the previous edition. Where one or more complete paragraphs have been deleted, the deletion is indicated by a bullet (•) between the paragraphs that remain.

A reference in brackets [ ] following a section or paragraph indicates material that has been extracted from another NFPA document. As an aid to the user, the complete title and edition of the source documents for extracts in mandatory sections of the document are given in Chapter 2 and those for extracts in informational sections are given in Annex F. Editorial changes to extracted material consist of revising references to an appropriate division in this document or the inclusion of the document number with the division number when the reference is to the original document. Requests for interpretations or revisions of extracted text shall be sent to the technical committee responsible for the source document.

Information on referenced publications can be found in Chapter 2 and Annex F.

Chapter 1 Administration

1.1 Scope.

1.1.1* General. This standard shall establish minimum requirements for protection against fire and explosion hazards in wastewater treatment plants and associated collection systems, including the hazard classification of specific areas and processes.

1.1.2 This standard shall apply to the following:

(1) Collection sewers
(2) Trunk sewers
(3) Intercepting sewers
(4) Combined sewers
(5) Storm sewers
(6) Pumping stations
(7) Wastewater treatment plants
(8) Sludge-handling facilities
(9) Chemical-handling facilities
(10) Treatment facilities
(11) Ancillary structures *(see 3.3.60.1)*

1.1.3 This standard shall not apply to the following:

(1) Collection, treatment, or disposal of industrial wastes or manufactured by-products that are treated on-site and not discharged to a publicly or privately operated municipal facility
(2) On-site treatment systems *(see 3.3.61.1)*
(3) Pressure sewer systems *(see 3.3.54.8)*
(4) Building drain systems and appurtenances *(see 3.3.5)*
(5) Industrial sewer systems and appurtenances *(see 3.3.54.5)*
(6) Personnel safety from toxic and hazardous materials or products of combustion
(7) Separate nonprocess-related structures *(see 3.3.60.2)*

1.2 Purpose.

1.2.1 The purpose of this standard shall be to provide a degree of fire and explosion protection for life, property, continuity of mission, and protection of the environment.

1.2.2 The purpose of this standard shall be to reduce or eliminate the effects of fire or explosion by maintaining structural integrity, controlling flame spread and smoke generation, preventing the release of toxic products of combustion, and maintaining serviceability and operation of the facility.

1.3 Application.

1.3.1* New Installations. The requirements of this standard shall apply to new installations.

1.3.1.1 When additions or modifications are made to existing facilities, the modifications shall reflect the requirements of this document.

1.3.1.2 In any event, the requirements of this standard shall be used by owners in a risk assessment to identify the areas of a treatment plant that are vulnerable to fire or other loss.

1.3.2 Toxicity and Biological Hazards.

1.3.2.1 This standard shall apply to the fire and explosion hazards of various substances associated with wastewater treatment and conveyance.

1.3.2.2 This standard shall not apply to toxicity and biological hazards.

> **CAUTION:** It is recognized that, from a personnel safety standpoint, toxicity and biological hazards can be present in life-threatening concentrations while no threat of fire or explosion exists.

1.3.3 Fire Risk Evaluation. A fire risk evaluation shall be initiated early in the facility design or alteration to integrate the fire prevention and fire protection requirements described in this document.

1.3.4 Ventilation Practices. Ventilation rates required by this standard shall be to minimize fire and explosion hazards, because insufficient ventilation rates can expose personnel to toxic and biological hazards.

1.3.5 Materials Selection. When conditions or applications warrant the selection of combustible, limited-combustible, or low flame spread materials, the fire risk evaluation shall include evaluation of flame spread, smoke generation, and the impact that a fire or explosion will have on the structural integrity of the facility.

> **CAUTION:** Because many of the corrosion-resistant materials and coatings are combustible or limited-combustible and could represent a considerable fuel load during fire events, the design and fire risk evaluation shall consider any additional hazards imposed by the use of these materials.

Copyright National Fire Protection Association
Provided by IHS under license with NFPA
No reproduction or networking permitted without license from IHS
Not for Resale

1.4 Retroactivity. The provisions of this standard reflect a consensus of what is necessary to provide an acceptable degree of protection from the hazards addressed in this standard at the time the standard was issued.

1.4.1 Unless otherwise specified, the provisions of this standard shall not apply to facilities, equipment, structures, or installations that existed or were approved for construction or installation prior to the effective date of the standard. Where specified, the provisions of this standard shall be retroactive.

1.4.2 In those cases where the authority having jurisdiction determines that the existing situation presents an unacceptable degree of risk, the authority having jurisdiction shall be permitted to apply retroactively any portions of this standard deemed appropriate.

1.4.3 The retroactive requirements of this standard shall be permitted to be modified if their application clearly would be impractical in the judgment of the authority having jurisdiction, and only where it is clearly evident that a reasonable degree of safety is provided.

1.5 Equivalency. Nothing in this standard is intended to prevent the use of systems, methods, or devices of equivalent or superior quality, strength, fire resistance, effectiveness, durability, and safety over those prescribed by this standard.

1.5.1 Technical documentation shall be submitted to the authority having jurisdiction to demonstrate equivalency.

1.5.2 The system, method, or device shall be approved for the intended purpose by the authority having jurisdiction.

1.6 Units and Formulas. Metric units of measurement used within this standard are in accordance with the modernized metric system known as the International System of Units (SI).

1.6.1 Values of measurement are followed by an approximate equivalent value in U.S. customary units.

1.6.2 For metric conversion practices, see IEEE/ASTM SI 10.

1.7 Document Organization. This document shall be divided into 10 chapters.

1.7.1 Chapters 1, 3, 7, 8, 9, and 10 shall apply generally.

1.7.2 Chapters 4, 5, and 6 shall apply to specific processes and functions.

1.8* *National Electrical Code*® Criteria.

1.8.1 NFPA 820 is based on the criteria established by Article 500 of NFPA 70 but shall not supersede or conflict with the requirements therein.

1.8.2 Once an area is classified, NFPA 70 shall be used to specify the types of equipment and the wiring methods that are required.

Chapter 2 Referenced Publications

2.1 General. The documents or portions thereof listed in this chapter are referenced within this standard and shall be considered part of the requirements of this document.

2.2 NFPA Publications. National Fire Protection Association, 1 Batterymarch Park, Quincy, MA 02169-7471.

NFPA 10, *Standard for Portable Fire Extinguishers,* 2007 edition.

NFPA 11, *Standard for Low-, Medium-, and High-Expansion Foam,* 2005 edition.

NFPA 12, *Standard on Carbon Dioxide Extinguishing Systems,* 2008 edition.

NFPA 12A, *Standard on Halon 1301 Fire Extinguishing Systems,* 2004 edition.

NFPA 13, *Standard for the Installation of Sprinkler Systems,* 2007 edition.

NFPA 14, *Standard for the Installation of Standpipe and Hose Systems,* 2007 edition.

NFPA 15, *Standard for Water Spray Fixed Systems for Fire Protection,* 2007 edition.

NFPA 16, *Standard for the Installation of Foam-Water Sprinkler and Foam-Water Spray Systems,* 2007 edition.

NFPA 17, *Standard for Dry Chemical Extinguishing Systems,* 2002 edition.

NFPA 20, *Standard for the Installation of Stationary Pumps for Fire Protection,* 2007 edition.

NFPA 22, *Standard for Water Tanks for Private Fire Protection,* 2003 edition.

NFPA 24, *Standard for the Installation of Private Fire Service Mains and Their Appurtenances,* 2007 edition.

NFPA 25, *Standard for the Inspection, Testing, and Maintenance of Water-Based Fire Protection Systems,* 2008 edition.

NFPA 30, *Flammable and Combustible Liquids Code,* 2008 edition.

NFPA 45, *Standard on Fire Protection for Laboratories Using Chemicals,* 2004 edition.

NFPA 51B, *Standard for Fire Prevention During Welding, Cutting, and Other Hot Work,* 2003 edition.

NFPA 54, *National Fuel Gas Code,* 2006 edition.

NFPA 61, *Standard for the Prevention of Fires and Dust Explosions in Agricultural and Food Processing Facilities,* 2008 edition.

NFPA 68, *Standard on Explosion Protection by Deflagration Venting,* 2007 edition.

NFPA 69, *Standard on Explosion Prevention Systems,* 2008 edition.

NFPA 70, *National Electrical Code*®, 2008 edition.

NFPA 70E®, *Standard for Electrical Safety in the Workplace,* 2004 edition.

NFPA 72®, *National Fire Alarm Code*®, 2007 edition.

NFPA 82, *Standard on Incinerators and Waste and Linen Handling Systems and Equipment,* 2004 edition.

NFPA 85, *Boiler and Combustion Systems Hazards Code,* 2007 edition.

NFPA 90A, *Standard for the Installation of Air-Conditioning and Ventilating Systems,* 2002 edition.

NFPA *101*®, *Life Safety Code*®, 2006 edition.

NFPA 204, *Standard for Smoke and Heat Venting,* 2007 edition.

NFPA 241, *Standard for Safeguarding Construction, Alteration, and Demolition Operations,* 2004 edition.

NFPA 251, *Standard Methods of Tests of Fire Resistance of Building Construction and Materials,* 2006 edition.

NFPA 256, *Standard Methods of Fire Tests of Roof Coverings,* 2003 edition.

NFPA 259, *Standard Test Method for Potential Heat of Building Materials,* 2008 edition.

NFPA 496, *Standard for Purged and Pressurized Enclosures for Electrical Equipment,* 2003 edition.

NFPA 497, *Recommended Practice for the Classification of Flammable Liquids, Gases, or Vapors and of Hazardous (Classified) Locations for Electrical Installations in Chemical Process Areas,* 2004 edition.

Copyright National Fire Protection Association
Provided by IHS under license with NFPA
No reproduction or networking permitted without license from IHS
Not for Resale

NFPA 499, *Recommended Practice for the Classification of Combustible Dusts and of Hazardous (Classified) Locations for Electrical Installations in Chemical Process Areas,* 2004 edition.

NFPA 600, *Standard on Industrial Fire Brigades,* 2005 edition.

NFPA 601, *Standard for Security Services in Fire Loss Prevention,* 2005 edition.

NFPA 654, *Standard for the Prevention of Fire and Dust Explosions from the Manufacturing, Processing, and Handling of Combustible Particulate Solids,* 2006 edition.

NFPA 780, *Standard for the Installation of Lightning Protection Systems,* 2008 edition.

NFPA 1142, *Standard on Water Supplies for Suburban and Rural Fire Fighting,* 2007 edition.

NFPA 2001, *Standard on Clean Agent Fire Extinguishing Systems,* 2008 edition.

2.3 Other Publications.

2.3.1 ASTM Publications. ASTM International, 100 Barr Harbor Drive, P.O. Box C700, West Conshohocken, PA 19428-2959.

IEEE/ASTM SI 10, *Use of the International System of Units (SI): the Modern Metric System,* 1997.

2.3.2 Other Publications.

Merriam-Webster's Collegiate Dictionary, 11th edition, Merriam-Webster, Inc., Springfield, MA, 2003.

2.4 References for Extracts in Mandatory Sections.

NFPA 10, *Standard for Portable Fire Extinguishers,* 2007 edition.

NFPA 68, *Standard on Explosion Protection by Deflagration Venting,* 2007 edition.

NFPA 70, *National Electrical Code®,* 2008 edition.

NFPA 99, *Standard for Health Care Facilities,* 2005 edition.

NFPA *101®, Life Safety Code®,* 2006 edition.

NFPA 150, *Standard on Fire and Life Safety in Animal Housing Facilities,* 2007 edition.

NFPA 306, *Standard for the Control of Gas Hazards on Vessels,* 2003 edition.

NFPA 329, *Recommended Practice for Handling Releases of Flammable and Combustible Liquids and Gases,* 2005 edition.

NFPA 801, *Standard for Fire Protection for Facilities Handling Radioactive Materials,* 2003 edition.

NFPA 851, *Recommended Practice for Fire Protection for Hydroelectric Generating Plants,* 2005 edition.

NFPA 1670, *Standard on Operations and Training for Technical Search and Rescue Incidents,* 2004 edition.

NFPA 5000®, Building Construction and Safety Code®, 2006 edition.

Chapter 3 Definitions

3.1 General. The definitions contained in this chapter shall apply to the terms used in this standard. Where terms are not defined in this chapter or within another chapter, they shall be defined using their ordinarily accepted meanings within the context in which they are used. *Merriam-Webster's Collegiate Dictionary,* 11th edition, shall be the source for the ordinarily accepted meaning.

3.2 NFPA Official Definitions.

3.2.1* Approved. Acceptable to the authority having jurisdiction.

3.2.2* Authority Having Jurisdiction (AHJ). An organization, office, or individual responsible for enforcing the requirements of a code or standard, or for approving equipment, materials, an installation, or a procedure.

3.2.3 Labeled. Equipment or materials to which has been attached a label, symbol, or other identifying mark of an organization that is acceptable to the authority having jurisdiction and concerned with product evaluation, that maintains periodic inspection of production of labeled equipment or materials, and by whose labeling the manufacturer indicates compliance with appropriate standards or performance in a specified manner.

3.2.4* Listed. Equipment, materials, or services included in a list published by an organization that is acceptable to the authority having jurisdiction and concerned with evaluation of products or services, that maintains periodic inspection of production of listed equipment or materials or periodic evaluation of services, and whose listing states that either the equipment, material, or service meets appropriate designated standards or has been tested and found suitable for a specified purpose.

3.2.5 Shall. Indicates a mandatory requirement.

3.2.6 Should. Indicates a recommendation or that which is advised but not required.

3.2.7 Standard. A document, the main text of which contains only mandatory provisions using the word "shall" to indicate requirements and which is in a form generally suitable for mandatory reference by another standard or code or for adoption into law. Nonmandatory provisions shall be located in an appendix or annex, footnote, or fine-print note and are not to be considered a part of the requirements of a standard.

3.3 General Definitions.

3.3.1 Activated Carbon. Adsorptive carbon particles or granules usually obtained by heating carbonaceous material in the absence of air or in steam and possessing a high capacity to selectively remove trace and soluble components from solution.

3.3.2 Adjacent. Sharing a common wall, partition, or barrier.

3.3.3* Anaerobic Digestion. A unit process designed to biologically convert organic matter (sludge) through the action of microorganisms in the absence of elemental oxygen.

3.3.4 Building. Any structure used or intended for supporting or sheltering any use or occupancy. [***101***, 2006]

3.3.5 Building Drain. In plumbing, the part of the lowest horizontal piping of a drainage system that receives the discharge from soil, waste, and other drainage pipes inside the walls of the building and conveys it to the building sewer (house connection or lateral).

3.3.6 Centrifuge. A mechanical device in which centrifugal force is used to separate solids from liquids or to separate liquids of different densities.

3.3.7 Chamber.

3.3.7.1 ***Grit Chamber.*** A detention chamber or an enlargement of a sewer designed to reduce the velocity of flow of the liquid to permit the separation of mineral from organic solids by differential sedimentation.

Copyright National Fire Protection Association
Provided by IHS under license with NFPA
No reproduction or networking permitted without license from IHS
Not for Resale

3.3.7.2 ***Screening Chamber.*** A chamber or enlargement of a sewer in which large suspended or floating solids or material is removed from raw wastewater by a screen.

3.3.8 Combustible. Capable of undergoing combustion.

3.3.9 Combustible Gas Detector. A gas detector used to detect the presence of flammable vapors and gases and to warn when concentrations in air approach the explosive range.

3.3.10 Combustible or Explosive Dust. A dust capable of spontaneous combustion or of exploding or burning when subjected to a source of ignition.

3.3.11 Compost. The product of the thermophilic biological oxidation of sludge or other organic materials.

3.3.12 Dissolved Air Flotation. A separation process in which air bubbles emerging from a supersaturated solution become attached to suspended solids in the liquid undergoing treatment and float them up to the surface.

3.3.13 Drying Bed. A confined, underdrained, shallow layer of sand or gravel structures on which digested sludge is distributed for draining and air drying; also an underdrained, shallow, diked earthen structure used for drying sludge.

3.3.14 Enclosed Space. The interior space of any tank or unit process that is closed to the atmosphere, excluding vents or pressure relief, or the area around any open tank or unit process surrounded by a building or other structure constructed with a roof and solid walls.

3.3.15 Equipment. In wastewater treatment facilities, a general term that includes items such as material, fittings, devices, appliances, and fixtures and apparatus, used as part of, or in connection with, a mechanical, instrumentation, or electrical installation.

3.3.15.1* ***Gas-Handling Equipment.*** Equipment, including gas compressors, sediment traps, drip traps, gas scrubbers, and pressure-regulating and control valves, used in the removal of gas evolved from the anaerobic digestion process and the compression, conditioning, or treatment of such gas.

3.3.15.2 ***Utilization Equipment.*** Equipment that utilizes electric energy for electronic, electromechanical, chemical, heating, lighting, or similar purposes. [**70:**100.I]

3.3.16 Equipment Enclosure. The housing that covers, protects, or guards a piece of equipment that is not intended for personnel occupancy but that can provide access to the equipment.

3.3.17 Explosionproof Apparatus. Apparatus enclosed in a case that is capable of withstanding an explosion of a specified gas or vapor that may occur within it and of preventing the ignition of a specified gas or vapor surrounding the enclosure by sparks, flashes, or explosion of the gas or vapor within, and that operates at such an external temperature that a surrounding flammable atmosphere will not be ignited thereby. [**70:**100.I]

3.3.18 Filter.

3.3.18.1 ***Belt Filter.*** A sludge-dewatering or -concentrating device having continuous bands or belts of filtering media that pass around rollers and from which the material caught on the media is usually removed by gravity and pressure.

3.3.18.2 ***Pressure or Gravity Filter.*** A filter used to pass liquid through a medium to remove suspended solids.

3.3.18.3 ***Trickling Filter.*** A treatment unit process consisting of stone, plastic, redwood, or similar media over which wastewater is distributed and through which wastewater trickles to the underdrains and is treated by the microbial slimes formed on the surface of the media.

3.3.18.4 ***Vacuum Filter.*** A unit process, used to dewater wastewater sludge, consisting of a cylindrical drum mounted on a horizontal axis, covered with a media, and subjected to an internal vacuum.

3.3.19 Filter Press. A plate and frame press used in a unit process that is operated hydraulically and mechanically to produce a semisolid sludge cake from a slurry.

3.3.20* Fire Barrier. A continuous vertical or horizontal membrane, such as a wall or floor assembly, that is designed and constructed with a specified fire resistance rating to limit the spread of fire and that also will restrict the movement of smoke.

3.3.21 Fire Loading. The amount of combustibles present in a given area, expressed in kJ/m^2 (Btu/ft^2). [**851**, 2005]

3.3.22 Fire Prevention. Measures directed toward avoiding the inception of fire. [**801**, 2003]

3.3.23 Fire Protection. Methods of providing for fire control or fire extinguishment. [**801**, 2003]

3.3.24 Fire-Rated Penetration Seal. An opening in a fire barrier for the passage of pipe, cable, duct, and so forth, that has been sealed so as to maintain a barrier rating. [**851**, 2005]

3.3.25 Flammable Limits.

3.3.25.1 ***Lower Flammable Limit (LFL).*** That concentration of a combustible material in air below which ignition will not occur. Also known as the lower explosive limit (LEL). [**329**, 2005]

3.3.25.2 ***Upper Flammable Limit (UFL).*** The highest concentration of a combustible substance in a gaseous oxidizer that will propagate a flame. [**68**, 2007]

3.3.26 Flash Dryer. A device for vaporizing water from partly dewatered and finely divided sludge through contact with a current of hot gas or superheated vapor that includes a squirrel-cage mill for separating the sludge cake into fine particles.

3.3.27 Flash Mixer. A device for quickly dispersing chemicals uniformly throughout a liquid or semisolid.

3.3.28 Flocculator. A device used in a unit process used for the formation of floc in wastewater.

3.3.29* Fluidized Bed Reactor. A pressure vessel or tank that is designed for liquid–solid or gas–solid reactions; the liquid or gas moves upward through the solids' particles at a velocity sufficient to suspend the individual particles in the fluid.

3.3.30 Force Main (Pressure Main). A pressure pipe connecting the pump discharge of a wastewater pumping station under pressure to a point of discharge.

3.3.31* Galleries. Long tunnels or walkways connecting separate buildings or structures that are generally underground, without windows, and with limited entrances and exits.

3.3.32 Gas.

3.3.32.1 ***Digester Gas.*** Gas obtained as a by-product from a controlled anaerobic sludge digestion unit process from the decomposition of organic matter.

Copyright National Fire Protection Association
Provided by IHS under license with NFPA
No reproduction or networking permitted without license from IHS
Not for Resale

3.3.32.2* ***Fuel Gas.*** A gas used as a fuel source, including natural gas, manufactured gas, sludge gas, liquefied petroleum gas–air mixtures, liquefied petroleum gas in the vapor phase, and mixtures of these gases.

3.3.32.3* ***Sewer Gas.*** Gas resulting from the decomposition of organic matter in wastewater in sewers and from the incidental, uncontrolled release of hydrocarbons or decomposition of organic matter in stagnant liquid and septic sludge in wastewater treatment plants.

3.3.32.4* ***Sludge Gas.*** Gas obtained as a by-product of the anaerobic sludge digestion process from the decomposition of organic matter in biosolids in liquid or semi-solid state when stored for extended periods of time.

3.3.33 Hazardous (Classified) Location. A location that is classified based on the properties of the flammable vapors, liquids, or gases, or combustible dusts or fibers that might be present and the likelihood that a flammable or combustible concentration or quantity is present.

3.3.34 Hydrogen Sulfide (H_2S). A toxic and lethal gas produced in sewers and digesters by anaerobic decomposition of wastewater solids or other anaerobic wastewater or sludge treatment processes.

3.3.35 Identified (as applied to equipment). Recognizable as suitable for the specific purpose, function, use, environment, application, and so forth, where described in a particular Code requirement. [**70:**100.I]

3.3.36 Incineration. Combustion or controlled burning of volatile organic matter in sludge and solid waste that reduces the volume of the material while producing heat, dry inorganic ash, and gaseous emissions.

3.3.37 Inspection. A visual examination of a system or portion thereof to verify that it appears to be in operating condition and is free of physical damage.

3.3.38 Intrinsically Safe. As applied to equipment and wiring, equipment and wiring that are incapable of releasing sufficient electrical energy under normal or abnormal conditions to cause ignition of a specific hazardous atmospheric mixture. [**99**, 2005]

3.3.39 Liquid.

3.3.39.1* ***Combustible Liquid.*** Any liquid that has a closed-cup flash point at or above 37.8°C (100°F). [**306**, 2003]

3.3.39.2* ***Flammable Liquid.*** A liquid that has a closed-cup flash point that is below 37.8°C (100°F) and a maximum vapor pressure of 2068 mm Hg (40 psia) at 37.8°C (100°F).

3.3.39.3 ***Volatile Liquid.*** A liquid that evaporates readily at normal temperature and pressure.

3.3.40 Maintenance. Work performed to ensure that equipment operates as directed by the manufacturer. [**10**, 2002]

3.3.41 Maintenance Hole. A structure located on top of an opening in a gravity sewer, or an opening in the top or side of an enclosed vessel to allow personnel entry; also referred to as manhole or manway.

3.3.42 Material.

3.3.42.1 ***Limited-Combustible Material.*** Refers to a building construction material not complying with the definition of noncombustible material that, in the form in which it is used, has a potential heat value not exceeding 3500 Btu/lb (8141 kJ/kg), where tested in accordance with NFPA 259 and includes (1) materials having a structural base of noncombustible material, with a surfacing not exceeding a thickness of ⅛ in. (3.2 mm) that has a flame spread index not greater than 50; and (2) materials, in the form and thickness used, other than as described in (1), having neither a flame spread index greater than 25 nor evidence of continued progressive combustion, and of such composition that surfaces that would be exposed by cutting through the material on any plane would have neither a flame spread index greater than 25 nor evidence of continued progressive combustion.

3.3.42.2* ***Noncombustible Material.*** In wastewater treatment facilities, a material that, in the form in which it is used and under the conditions anticipated, will not ignite, burn, support combustion, or release flammable vapors when subjected to fire or heat.

3.3.43 Methane (CH_4). A colorless, odorless, flammable gaseous hydrocarbon present in natural gas and formed by the anaerobic decomposition of organic matter. *(See 3.3.3, Anaerobic Digestion.)*

3.3.44 Nonenclosed. Any tank or unit process open to the atmosphere or the area around any open tank or unit process housed in a building or other structure constructed with a roof and having at least 50 percent of the wall area open to the atmosphere. Fixed open louvered panels with effective openings greater than 50 percent of the wall area and evenly distributed over the wall area are considered open to the atmosphere.

3.3.45 Oxygen-Enriched Atmosphere. Air atmospheres containing more than 23.5 percent oxygen by volume at one standard atmosphere pressure. [**1670**, 2004]

3.3.46 Ozonation. The process of contacting wastewater or air with ozone for the purpose of disinfection, oxidation, or odor control.

3.3.47* Physically Separated. A gastight partition between two adjacent spaces, or two nonadjacent spaces, with no means of gas communication between the spaces.

3.3.48* Pumping Station. A structure that contains pumps and appurtenant piping, valves, and other mechanical and electrical equipment for pumping wastewater or other liquid.

3.3.49 Pyrolysis. The destructive distillation of organic compounds in an oxygen-free environment that converts the organic matter into gases, liquids, and char.

3.3.50 Rating.

3.3.50.1 ***Fire Resistance Rating.*** The time, in minutes or hours, that materials or assemblies have withstood a fire exposure as established in accordance with the test procedures of NFPA 251. [**150**, 2007]

3.3.50.2* ***Low Flame Spread Rating.*** A flame spread rating of 25 or less.

3.3.51 Rotating Biological Contactor (RBC). A unit process for wastewater treatment that is composed of large, closely spaced plastic discs that are rotated about a horizontal shaft (usually a secondary biological treatment process).

3.3.52 Scum or Skimmings. Grease, solids, liquids, and other floatable material removed from settling tanks.

3.3.53* Sedimentation. The unit process of subsidence of suspended matter carried by water, wastewater, or other liquids by gravity.

Copyright National Fire Protection Association
Provided by IHS under license with NFPA
No reproduction or networking permitted without license from IHS
Not for Resale

3.3.54 Sewer. A single pipe or system of pipes or conduits that carries wastewater or drainage water.

3.3.54.1 ***Branch Sewer.*** A sewer that receives wastewater from a relatively small area and discharges into a main sewer serving more than one branch sewer area.

3.3.54.2 ***Building Sewer.*** In plumbing, a sewer that consists of the extension from the building drain to the public sewer or other place of disposal; also called house connection or lateral.

3.3.54.3 ***Collector Sewer.*** A sewer that consists of a pipe or conduit that receives wastewater from a relatively small area from two or more lateral sewers and that subsequently discharges into a trunk sewer.

3.3.54.4 ***Combined Sewer.*** A sewer intended to receive both wastewater and storm or surface water.

3.3.54.5 ***Industrial Sewer.*** A sewer intended to receive only industrial wastewater or other liquid or water-carried wastes. *(See also 3.3.54.12, Sanitary Sewer; 3.3.54.13, Storm Sewer; and 3.3.54.4, Combined Sewer.)*

3.3.54.6 ***Interceptor Sewer.*** A sewer that receives dry-weather flow and frequently additional predetermined quantities of storm water (if from a combined system) from a number of transverse sewers or outlets and conducts such water to a point for treatment or disposal; also called main sewer.

3.3.54.7 ***Outfall Sewer.*** A sewer that receives wastewater from a collecting system or from a treatment plant and carries it to a point of final discharge.

3.3.54.8 ***Pressure Sewer.*** A collection sewer that incorporates a wastewater grinder pump or septic tank effluent pump to convey wastewater from a single residence or group of residences or small commercial establishments to a private or public sewer system or on-site disposal system.

3.3.54.9 ***Private Sewer.*** A sewer privately owned and used by one or more properties or owners.

3.3.54.10 ***Relief Sewer.*** A sewer built to carry the flows in excess of the capacity of an existing sewer; also, a sewer intended to carry a portion of the flow from a district in which the existing sewers are of insufficient capacity.

3.3.54.11 ***Residential Sewer.*** A sewer intended to receive only residential wastewater. *(See also 3.3.54.4, Combined Sewer; 3.3.54.12, Sanitary Sewer; and 3.3.54.13, Storm Sewer.)*

3.3.54.12 ***Sanitary Sewer.*** A sewer that carries liquid and water-carried wastes from residences, commercial buildings, industrial plants, and institutions together with minor quantities of storm water, surface water, and groundwater that are not admitted intentionally.

3.3.54.13 ***Storm Sewer.*** A pipe or conduit that carries storm water and surface water, street wash and other wash water, or drainage but that excludes domestic wastewater and industrial wastes (also called storm drain).

3.3.54.14 ***Trunk Sewer.*** A sewer consisting of the principal pipe or conduit to which one or more collector sewers or branch sewers are tributaries; also called main sewer.

3.3.55 Sludge. A semiliquid mass of accumulated settled solids deposited from raw or treated wastewater in tanks or basins; also referred to as biosolids.

3.3.55.1 ***Activated Sludge.*** A microbial mass grown in aeration tanks, subsequently separated from treated wastewater by sedimentation, and wasted or returned to the process as needed.

3.3.56 Sludge Cake. A semisolid product of a sludge-dewatering process.

3.3.57 Sludge Dewatering. The process of removing a part of the water in sludge by any physical or mechanical method without heat, such as draining, pressing, vacuum filtration, centrifuging, or passing between rollers.

3.3.58 Sludge Gas Vent. A passage that allows the controlled release of gases from anaerobic treatment processes or gas storage facilities.

3.3.59 Sludge Thickening. A sludge treatment process designed to concentrate wastewater sludges by gravity, mechanical means, or air flotation.

3.3.60 Structure. That which is built or constructed and limited to buildings and nonbuilding structures as defined herein. [***5000***, 2006]

3.3.60.1 ***Ancillary Structure.*** A structure that is an integral part of the wastewater treatment or collection process.

3.3.60.2 ***Separate Nonprocess-Related Structure.*** A structure that is physically separated and does not contain any process-related equipment associated with the collection and treatment of wastewater and solids derived from wastewater treatment processes.

3.3.61 System.

3.3.61.1 ***On-Site Treatment System.*** A self-contained system, including pumping equipment, that provides both treatment and disposal of wastewater on or immediately adjacent to a single residence or group of residences or small commercial establishments.

3.3.61.2 ***Sludge-Drying System.*** A process that uses physical or mechanical evaporation techniques with or without the application of heat to achieve solids concentrations greater than 85 percent.

3.3.62 Tank.

3.3.62.1 ***Imhoff Tank.*** A deep, two-story wastewater treatment tank consisting of an upper continuous-flow sedimentation chamber and a lower sludge digestion chamber.

3.3.62.2 ***Nitrification Tank.*** A unit process tank for the oxidation of ammonia and nitrogen into nitrates through biochemical actions.

3.3.63* Through-Penetration Firestop. A specific construction consisting of the materials that fill the opening around penetrating items such as cables, cable trays, conduits, ducts, and pipes and their means of support through the wall or floor opening to prevent spread of fire.

3.3.64 Treatment.

3.3.64.1 ***Anaerobic Waste Treatment.*** A unit process providing treatment of the liquid stream by action of microorganisms in the absence of elemental oxygen, the process by-products of which include a gas containing methane, carbon dioxide, and small quantities of hydrogen sulfide

3.3.64.2 ***Heat Treatment.*** A sludge-conditioning process combining high temperature, time, and pressure to improve the dewaterability of organic sludge.

3.3.64.3* ***Sludge Treatment.*** The processing of wastewater sludges to render them stable.

--`,,```,,,,````-`-`,,`,,`,`,,`---

Copyright National Fire Protection Association
Provided by IHS under license with NFPA
No reproduction or networking permitted without license from IHS
Not for Resale

3.3.64.4 ***Wastewater Treatment.***

3.3.64.4.1 ***Advanced (Tertiary) Wastewater Treatment.*** Any physical, chemical, or biological treatment process used to accomplish a degree of treatment greater than that achieved by secondary treatment. *(See also 3.3.64.4.3, Secondary Wastewater Treatment.)*

3.3.64.4.2 ***Primary Wastewater Treatment.*** The first major treatment in a wastewater treatment plant, generally consisting of screening, comminution or grinding, grit removal, sedimentation, skimming, or any combination of such unit processes.

3.3.64.4.3 ***Secondary Wastewater Treatment.*** Wastewater treatment unit processes usually consisting of primary treatment and biological oxidation using activated sludge or trickling filtration followed by clarification.

3.3.65 Tunnel. See 3.3.31, Galleries.

3.3.66 Unit Process. A stage or step in the treatment of wastewater.

3.3.67 Vault. An enclosed structure, usually underground, used to permit personnel access to various types of equipment and instrumentation.

3.3.68 Ventilation Rate. A value based on the number of air changes per hour and calculated using 100 percent outside air for the supply air that is exhausted. The number of air changes per hour is calculated on the basis of the maximum aggregate volume (under normal operating conditions) of the space to be ventilated.

3.3.69 Waste.

3.3.69.1 ***Hazardous Waste.*** Waste that is potentially damaging to the environment or human health due to its toxicity, ignitability, corrosivity, or chemical reactivity or another cause.

3.3.69.2 ***Industrial Waste.*** Generally liquid, solid, or gaseous wastes originating from the manufacture of specific products.

3.3.70 Wastewater. The spent water of a community that is a combination of the liquid and water-carried wastes from residences, commercial buildings, industrial plants, and institutions, together with any groundwater, surface water, and storm water that might be present.

3.3.70.1 ***Domestic Wastewater.*** Wastewater derived principally from sources such as dwellings, commercial establishments, and institutions, that might or might not contain small amounts of groundwater, surface water, or storm water.

3.3.70.2 ***Residential Wastewater.*** Wastewater derived from areas consisting of single- and multiple-family residences.

3.3.71 Well.

3.3.71.1* ***Dry Well.*** The portion of a pumping station designed to provide isolation and shelter or accommodations for controls or equipment associated with pumping of wastewater and designed to completely and permanently exclude wastewater or wastewater-derived atmospheres.

3.3.71.2* ***Wet Well.*** The portion of the pumping station that receives and temporarily stores wastewater for the purpose of pumping.

Chapter 4 Collection Systems

4.1* General.

4.1.1 This chapter shall establish minimum criteria for protection against fire and explosion hazards in the collection and transportation of municipal wastewater.

4.1.2 This chapter shall not apply to on-site systems, force mains, or those sewers that principally convey industrial wastes.

4.2* Design and Construction. The design and construction of collection system facilities shall conform to Table 4.2, which summarizes the various components associated with wastewater collection and transport systems.

Table 4.2 Collection Systems

Row	Line	Location and Function	Fire and Explosion Hazard	Ventilation	Extent of Classified Area	*NEC*-Area Electrical Classification (All Class I, Group D)	Material of Construction for Buildings or Structures	Fire Protection Measures
1		MATERIALS USED IN REHABILITATION, RECONSTRUCTION, OR SLIP-LINING OF SEWERS	NA	NA	NA	NA	In accordance with 8.3.1	NA

Notes:
(1) The NR designation in the ventilation column indicates that no ventilation requirements are established for the space, and, therefore, Table 9.1.1.4 also has no requirements.
(2) Row and Line columns are used to refer to specific figures in A.4.2 and specific requirements for each location and function.
(3) The following codes are used in this table:
A: No ventilation or ventilated at less than 12 air changes per hour.
B: Continuously ventilated at 12 changes per hour or in accordance with Chapter 9.
C: Continuously ventilated at six air changes per hour or in accordance with Chapter 9.
CGD: Combustible gas detection system.
D: No ventilation or ventilated at less than six air changes per hour.
FDS: Fire detection system.
FE: Portable fire extinguisher.
LC: Limited-combustible material.
LFS: Low flame spread material.
NA: Not applicable.
NC: Noncombustible material.
NEC: In accordance with NFPA 70.
NNV: Not normally ventilated.
NR: No requirement.

Copyright National Fire Protection Association
Provided by IHS under license with NFPA
No reproduction or networking permitted without license from IHS
Not for Resale

Table 4.2 *Continued*

Row	Line	Location and Function	Fire and Explosion Hazard	Ventilation	Extent of Classified Area	*NEC*-Area Electrical Classification (All Class I, Group D)	Material of Construction for Buildings or Structures	Fire Protection Measures
2		INDUSTRIAL SEWER Sewer transporting industrial wastewater only (no sanitary wastewater)	Not included within the scope of this standard					
3		STORM SEWER Sewer transporting storm water only (no sanitary wastewater)	Possible ignition of flammable gases and floating flammable liquids	NNV	Inside of sewer	Division 2	In accordance with 8.3.1	NR
4		STORM WATER PUMPING STATION WET WELLS Liquid side of pumping station serving only a storm sewer system	Possible ignition of flammable gases and floating flammable liquids	NNV	Entire room or space	Division 2	NC, LC, or LFS	CGD if enclosed
5	a	STORM WATER PUMPING STATION DRY WELLS Dry side of a pumping station serving only a storm sewer system and physically separated from wet well	Buildup of vapors from flammable or combustible liquids	D	Entire dry well	Division 2, or unclassified, if space provided with pressurization in accordance with NFPA 496	NC, LC, or LFS	FE
	b			C		Unclassified		
6		PRESSURE SEWER (Force main) Sewer under pressure (flooded discharge pipe from pump or tank)	Not included within the scope of this standard					
7		BUILDING SEWER (Lateral sewer or drain) Sewer serving a house or single building (plumbing)	Not included within the scope of this standard					
8		INDIVIDUAL RESIDENTIAL SEWER Sewer serving one but not more than five dwellings	NA	NNV	Within enclosed space	Unclassified	NR	NR
9		INDIVIDUAL RESIDENTIAL PUMPING UNITS Pumping units serving one but not more than five dwellings (e.g., grinder pumps, septic tank effluent pumps, ejector pumps)	NA	NNV	Within enclosed space	Unclassified	NR	NR

Notes:
(1) The NR designation in the ventilation column indicates that no ventilation requirements are established for the space, and, therefore, Table 9.1.1.4 also has no requirements.
(2) Row and Line columns are used to refer to specific figures in A.4.2 and specific requirements for each location and function.
(3) The following codes are used in this table:
A: No ventilation or ventilated at less than 12 air changes per hour.
B: Continuously ventilated at 12 changes per hour or in accordance with Chapter 9.
C: Continuously ventilated at six air changes per hour or in accordance with Chapter 9.
CGD: Combustible gas detection system.
D: No ventilation or ventilated at less than six air changes per hour.
FDS: Fire detection system.
FE: Portable fire extinguisher.
LC: Limited-combustible material.
LFS: Low flame spread material.
NA: Not applicable.
NC: Noncombustible material.
NEC: In accordance with NFPA 70.
NNV: Not normally ventilated.
NR: No requirement.

(continues)

Copyright National Fire Protection Association
Provided by IHS under license with NFPA
No reproduction or networking permitted without license from IHS
Not for Resale

Table 4.2 *Continued*

Row	Line	Location and Function	Fire and Explosion Hazard	Ventilation	Extent of Classified Area	*NEC*-Area Electrical Classification (All Class I, Group D)	Material of Construction for Buildings or Structures	Fire Protection Measures
10	a	RESIDENTIAL SEWER Sewer transporting primarily residential wastewater	Possible ignition of flammable gases and floating flammable liquids	NNV	Within enclosed space	Division 2	In accordance with 8.3.1	NR
	b			B		Unclassified		
11	a	RESIDENTIAL WASTEWATER PUMPING STATION WET WELL Pumping station transporting primarily residential wastewater	Possible ignition of flammable gases and floating flammable liquids	A	Entire room or space	Division 2	NC, LC, or LFS	CGD
	b			B		Unclassified		
12	a	RESIDENTIAL WASTEWATER PUMPING STATION DRY WELL Dry side of a pumping station transporting primarily residential wastewater	Buildup of vapors from flammable or combustible liquids	D	Entire room or space	Division 2	NC, LC, or LFS	FE
	b			C		Unclassified		
13		OUTFALL SEWER Final discharge pipe from a treatment plant, transporting treated wastewater	NA	NNV	NA	Unclassified	NR	NR
14	a	SANITARY SEWER Sewer transporting domestic, commercial, and industrial wastewater	Possible ignition of flammable gases and floating flammable liquids	NNV	Inside of sewer	Division 1	In accordance with 8.3.1	NR
	b			B		Division 2		
15	a	COMBINED SEWER Sewer transporting domestic, commercial, and industrial wastewater and storm water	Possible ignition of flammable gases and floating flammable liquids	NNV	Inside of sewer	Division 1	In accordance with 8.3.1	NR
	b			B		Division 2		

Notes:
(1) The NR designation in the ventilation column indicates that no ventilation requirements are established for the space, and, therefore, Table 9.1.1.4 also has no requirements.
(2) Row and Line columns are used to refer to specific figures in A.4.2 and specific requirements for each location and function.
(3) The following codes are used in this table:
A: No ventilation or ventilated at less than 12 air changes per hour.
B: Continuously ventilated at 12 changes per hour or in accordance with Chapter 9.
C: Continuously ventilated at six air changes per hour or in accordance with Chapter 9.
CGD: Combustible gas detection system.
D: No ventilation or ventilated at less than six air changes per hour.
FDS: Fire detection system.
FE: Portable fire extinguisher.
LC: Limited-combustible material.
LFS: Low flame spread material.
NA: Not applicable.
NC: Noncombustible material.
NEC: In accordance with NFPA 70.
NNV: Not normally ventilated.
NR: No requirement.

Copyright National Fire Protection Association
Provided by IHS under license with NFPA
No reproduction or networking permitted without license from IHS
Not for Resale

Table 4.2 *Continued*

Row	Line	Location and Function	Fire and Explosion Hazard	Ventilation	Extent of Classified Area	*NEC*-Area Electrical Classification (All Class I, Group D)	Material of Construction for Buildings or Structures	Fire Protection Measures
16	a	WASTEWATER PUMPING STATION WET WELLS Liquid side of a pumping station serving a sanitary sewer or combined system	Possible ignition of flammable gases and floating flammable liquids	A	Entire room or space	Division 1	NC, LC, or LFS	CGD
	b			B		Division 2		
17	a	BELOWGRADE OR PARTIALLY BELOWGRADE WASTEWATER PUMPING STATION DRY WELL Pump room physically separated from wet well; pumping of wastewater from a sanitary or combined sewer system through closed pumps and pipes	Buildup of vapors from flammable or combustible liquids	C	Entire space or room	Unclassified	NC, LC, or LFS	FE
	b			D		Division 2, or unclassified, if space provided with pressurization in accordance with NFPA 496		
18		ABOVEGRADE WASTEWATER PUMPING STATION Pump room physically separated with no personnel access to wet well; pumping of wastewater from a sanitary or combined sewer system through closed pumps and pipes	NA	NR	NA	Unclassified	NC, LC, or LFS	FE

Notes:
(1) The NR designation in the ventilation column indicates that no ventilation requirements are established for the space, and, therefore, Table 9.1.1.4 also has no requirements.
(2) Row and Line columns are used to refer to specific figures in A.4.2 and specific requirements for each location and function.
(3) The following codes are used in this table:
A: No ventilation or ventilated at less than 12 air changes per hour.
B: Continuously ventilated at 12 changes per hour or in accordance with Chapter 9.
C: Continuously ventilated at six air changes per hour or in accordance with Chapter 9.
CGD: Combustible gas detection system.
D: No ventilation or ventilated at less than six air changes per hour.
FDS: Fire detection system.
FE: Portable fire extinguisher.
LC: Limited-combustible material.
LFS: Low flame spread material.
NA: Not applicable.
NC: Noncombustible material.
NEC: In accordance with NFPA 70.
NNV: Not normally ventilated.
NR: No requirement.

(continues)

Copyright National Fire Protection Association
Provided by IHS under license with NFPA
No reproduction or networking permitted without license from IHS
Not for Resale

Table 4.2 *Continued*

Row	Line	Location and Function	Fire and Explosion Hazard	Ventilation	Extent of Classified Area	*NEC*-Area Electrical Classification (All Class I, Group D)	Material of Construction for Buildings or Structures	Fire Protection Measures
19	a	ABOVEGRADE WASTEWATER PUMPING STATION Pump room not physically separated from wet well; pumping of wastewater from a sanitary or combined sewer system through closed pumps and pipes	Possible ignition of flammable gases and floating flammable liquids	A	Entire space or room	Division 1	NC	FE
	b			B		Division 2	NC, LC, or LFS	
20	a	ODOR-CONTROL SYSTEM AREAS Areas physically separated from wet well and housing systems handling wet well gases	Leakage and ignition of flammable gases	D	Entire area if enclosed	Division 2	NC, LC, or LFS	CGD and FDS
	b			C, or outdoors	Areas within 0.9 m (3 ft) of leakage sources such as fans, dampers, flexible connections, flanges, pressurized unwelded ductwork, and odor-control vessels	Division 2		
	c				Areas beyond 0.9 m (3 ft)	Unclassified		
21	a	MAINTENANCE HOLES Access to sewer for personnel entry	Possible ignition of flammable gases and floating flammable liquids	NNV	Inside	Division 1	In accordance with 8.3.1	NR
	b			B		Division 2		

Notes:
(1) The NR designation in the ventilation column indicates that no ventilation requirements are established for the space, and, therefore, Table 9.1.1.4 also has no requirements.
(2) Row and Line columns are used to refer to specific figures in A.4.2 and specific requirements for each location and function.
(3) The following codes are used in this table:
A: No ventilation or ventilated at less than 12 air changes per hour.
B: Continuously ventilated at 12 changes per hour or in accordance with Chapter 9.
C: Continuously ventilated at six air changes per hour or in accordance with Chapter 9.
CGD: Combustible gas detection system.
D: No ventilation or ventilated at less than six air changes per hour.
FDS: Fire detection system.
FE: Portable fire extinguisher.
LC: Limited-combustible material.
LFS: Low flame spread material.
NA: Not applicable.
NC: Noncombustible material.
NEC: In accordance with NFPA 70.
NNV: Not normally ventilated.
NR: No requirement.

Copyright National Fire Protection Association
Provided by IHS under license with NFPA
No reproduction or networking permitted without license from IHS
Not for Resale

Table 4.2 *Continued*

Row	Line	Location and Function	Fire and Explosion Hazard	Ventilation	Extent of Classified Area	*NEC*-Area Electrical Classification (All Class I, Group D)	Material of Construction for Buildings or Structures	Fire Protection Measures
22	a	JUNCTION CHAMBERS Structure where sewers intersect	Buildup of vapors from flammable or combustible liquids	NNV	Inside	Division 1	In accordance with 8.3.1	NR
	b			B	Open and above grade or inside and ventilated	Division 2		
23		INVERTED SIPHONS Depressed section of gravity sewer	Possible ignition of flammable gases and floating flammable liquids	NNV	Interior of inlet and outlet structures	Division 1	NC	NR
24		CATCH BASINS (Curb inlet) Inlet where street water enters a storm or combined sewer	Buildup of vapors from flammable or combustible liquids	NNV	Enclosed space	Division 1	In accordance with 8.3.1	NR
25	a	RESIDENTIAL DIVERSION STRUCTURES Enclosed structures where residential wastewater can be diverted	Buildup of vapors from flammable or combustible liquids	NNV	Enclosed space	Division 2	In accordance with Chapter 8	NR
	b			B		Unclassified		
26	a	RESIDENTIAL BELOWGRADE VALVE VAULT With an exposed residential wastewater surface	Possible ignition of gases and floating flammable liquids	NNV	Enclosed space	Division 2	In accordance with 8.3.1	NR
	b			B		Unclassified		
27	a	RESIDENTIAL CONTROL STRUCTURES Enclosed structures where residential wastewater flow is regulated	Buildup of vapors from flammable or combustible liquids	A	Enclosed space	Division 2	In accordance with Chapter 8	NR
	b			B		Unclassified		

Notes:
(1) The NR designation in the ventilation column indicates that no ventilation requirements are established for the space, and, therefore, Table 9.1.1.4 also has no requirements.
(2) Row and Line columns are used to refer to specific figures in A.4.2 and specific requirements for each location and function.
(3) The following codes are used in this table:
A: No ventilation or ventilated at less than 12 air changes per hour.
B: Continuously ventilated at 12 changes per hour or in accordance with Chapter 9.
C: Continuously ventilated at six air changes per hour or in accordance with Chapter 9.
CGD: Combustible gas detection system.
D: No ventilation or ventilated at less than six air changes per hour.
FDS: Fire detection system.
FE: Portable fire extinguisher.
LC: Limited-combustible material.
LFS: Low flame spread material.
NA: Not applicable.
NC: Noncombustible material.
NEC: In accordance with NFPA 70.
NNV: Not normally ventilated.
NR: No requirement.

(continues)

Copyright National Fire Protection Association
Provided by IHS under license with NFPA
No reproduction or networking permitted without license from IHS
Not for Resale

Table 4.2 *Continued*

Row	Line	Location and Function	Fire and Explosion Hazard	Ventilation	Extent of Classified Area	*NEC*-Area Electrical Classification (All Class I, Group D)	Material of Construction for Buildings or Structures	Fire Protection Measures
28	a	RESIDENTIAL BELOWGRADE METERING VAULT With an exposed residential wastewater surface	Possible ignition of flammable gases and floating flammable liquids	NNV	Enclosed space	Division 2	In accordance with 8.3.1	NR
	b			B		Unclassified		
29	a	DIVERSION STRUCTURES Enclosed structures where wastewater can be diverted	Buildup of vapors from flammable or combustible liquids	NNV	Enclosed space	Division 1	In accordance with Chapter 8	NR
	b			B		Division 2		
30		ABOVEGRADE VALVE VAULT Physically separated from the wet well; valves in vault in closed piping system	NA	NR	NA	Unclassified	NC, LC, or LFS	NR
31	a	BELOWGRADE VALVE VAULT Physically separated from the wet well and with closed piping system	Buildup of vapors from flammable or combustible liquids	NNV	Enclosed space	Division 2	NC, LC, or LFS	NR
	b			C		Unclassified		
32	a	BELOWGRADE VALVE VAULT With an exposed wastewater surface	Possible ignition of gases and floating flammable liquids	NNV	Enclosed space	Division 1	NC	NR
	b			B		Division 2	NC, LC, or LFS	
33	a	CONTROL STRUCTURES Enclosed structures where wastewater or storm water flow is regulated	Buildup of vapors from flammable or combustible liquids	A	Enclosed space	Division 1	In accordance with Chapter 8	NR
	b			B		Division 2		

Notes:
(1) The NR designation in the ventilation column indicates that no ventilation requirements are established for the space, and, therefore, Table 9.1.1.4 also has no requirements.
(2) Row and Line columns are used to refer to specific figures in A.4.2 and specific requirements for each location and function.
(3) The following codes are used in this table:
A: No ventilation or ventilated at less than 12 air changes per hour.
B: Continuously ventilated at 12 changes per hour or in accordance with Chapter 9.
C: Continuously ventilated at six air changes per hour or in accordance with Chapter 9.
CGD: Combustible gas detection system.
D: No ventilation or ventilated at less than six air changes per hour.
FDS: Fire detection system.
FE: Portable fire extinguisher.
LC: Limited-combustible material.
LFS: Low flame spread material.
NA: Not applicable.
NC: Noncombustible material.
NEC: In accordance with NFPA 70.
NNV: Not normally ventilated.
NR: No requirement.

Copyright National Fire Protection Association
Provided by IHS under license with NFPA
No reproduction or networking permitted without license from IHS
Not for Resale

Table 4.2 *Continued*

Row	Line	Location and Function	Fire and Explosion Hazard	Ventilation	Extent of Classified Area	*NEC*-Area Electrical Classification (All Class I, Group D)	Material of Construction for Buildings or Structures	Fire Protection Measures
34	a	WASTEWATER HOLDING BASINS Enclosed structures temporarily holding untreated or partially treated wastewater	Possible ignition of flammable gases and floating flammable liquids	A	Enclosed space	Division 1	NC	NR
	b			B		Division 2	NC, LC, or LFS	
35		WASTEWATER HOLDING BASINS, LINED OR UNLINED Open structures holding storm water, combined wastewater, untreated or partially treated wastewater	NR	NR	NR	NR	NR	NR
36	a	BELOWGRADE METERING VAULT Physically separated from the wet well and with closed piping system	Buildup of vapors from flammable or combustible liquids	NNV	Enclosed space	Division 2	NC, LC, or LFS	NR
	b			C		Unclassified		
37	a	BELOWGRADE METERING VAULT With an exposed wastewater surface	Possible ignition of flammable gases and floating flammable liquids	NNV	Enclosed space	Division 1	NC	NR
	b			B		Division 2	NC, LC, or LFS	
38		COARSE AND FINE SCREEN FACILITIES *(See Coarse and Fine Screen Facilities in Table 5.2.)*						

Notes:
(1) The NR designation in the ventilation column indicates that no ventilation requirements are established for the space, and, therefore, Table 9.1.1.4 also has no requirements.
(2) Row and Line columns are used to refer to specific figures in A.4.2 and specific requirements for each location and function.
(3) The following codes are used in this table:
A: No ventilation or ventilated at less than 12 air changes per hour.
B: Continuously ventilated at 12 changes per hour or in accordance with Chapter 9.
C: Continuously ventilated at six air changes per hour or in accordance with Chapter 9.
CGD: Combustible gas detection system.
D: No ventilation or ventilated at less than six air changes per hour.
FDS: Fire detection system.
FE: Portable fire extinguisher.
LC: Limited-combustible material.
LFS: Low flame spread material.
NA: Not applicable.
NC: Noncombustible material.
NEC: In accordance with NFPA 70.
NNV: Not normally ventilated.
NR: No requirement.

Copyright National Fire Protection Association
Provided by IHS under license with NFPA
No reproduction or networking permitted without license from IHS
Not for Resale

Chapter 5 Liquid Stream Treatment Processes

5.1* General.

5.1.1 This chapter shall establish minimum criteria for protection against fire and explosion hazards associated with liquid stream treatment processes.

5.1.2 This chapter shall not apply to treatment systems serving individual structures or treatment systems that principally treat industrial wastes.

5.2* Design and Construction. The design and construction of liquid stream treatment processes shall conform to Table 5.2.

Table 5.2 Liquid Stream Treatment Processes

Row	Line	Location and Function	Fire and Explosion Hazard	Ventilation	Extent of Classified Area[1]	*NEC*-Area Electrical Classification (All Class I, Group D)	Material of Construction for Buildings or Structures	Fire Protection Measures
1	a	COARSE AND FINE SCREEN FACILITIES Removal of screenings from raw wastewater	Possible ignition of flammable gases and floating flammable liquids	A	Enclosed— entire space	Division 1	NC	FE, H, and CGD if enclosed
	b			B		Division 2	NC, LC, or LFS	
	c			Not enclosed, open to atmosphere	Within a 3 m (10 ft) envelope around equipment and open channel[2,3]			
2		PUMPING STATIONS *(See Collection Systems, Table 4.2.)*						
3	a	FLOW EQUALIZATION TANKS Storage of raw or partially treated wastewater	Possible ignition of flammable gases and floating flammable liquids	A	Enclosed— entire space	Division 1	NC	FE, H, and CGD if enclosed
	b			B		Division 2	NC, LC, or LFS	
	c			Not enclosed, open to atmosphere	Within a 3 m (10 ft) envelope around equipment and open channel[2,3]			

Notes:
(1) The NR designation in the ventilation column indicates that no ventilation requirements are established for the space, and, therefore, Table 9.1.1.4 also has no requirements.
(2) Row and Line columns are used to refer to Figure A.5.2 and specific requirements for each location and function.
(3) The following codes are used in this table:
A: No ventilation or ventilated at less than 12 air changes per hour.
B: Continuously ventilated at 12 changes per hour or in accordance with Chapter 9.
C: Continuously ventilated at six air changes per hour or in accordance with Chapter 9.
CGD: Combustible gas detection system.
D: No ventilation or ventilated at less than six air changes per hour.
FE: Portable fire extinguisher.
H: Hydrant protection in accordance with 7.2.4.
LC: Limited-combustible material.
LFS: Low flame spread material.
NA: Not applicable.
NC: Noncombustible material.
NEC: In accordance with NFPA 70.
NR: No requirement.
[1]Open channels and open structures upstream from the unit processes are classified the same as the downstream processes they supply.
[2]The area beyond the envelope is unclassified.
[3]Where liquid turbulence is not induced by aeration or other factors, the following criteria apply: (1) interior of the tank from the minimum operating water surface to the top of the tank wall; (2) envelope 0.46 m (18 in.) above the top of the tank and extending 0.46 m (18 in.) beyond the exterior wall; (3) envelope 0.46 m (18 in.) above grade extending 3 m (10 ft) horizontally from the exterior tank walls.

Copyright National Fire Protection Association
Provided by IHS under license with NFPA
No reproduction or networking permitted without license from IHS
Not for Resale

Table 5.2 *Continued*

Row	Line	Location and Function	Fire and Explosion Hazard	Ventilation	Extent of Classified Area[1]	*NEC*-Area Electrical Classification (All Class I, Group D)	Material of Construction for Buildings or Structures	Fire Protection Measures
4	a	GRIT REMOVAL TANKS Separation of grit from raw wastewater	Possible ignition of flammable gases and floating flammable liquids	A	Enclosed— entire space	Division 1	NC	FE, H, and CGD if enclosed
	b			B		Division 2	NC, LC, or LFS	
	c			Not enclosed, open to atmosphere	Within a 3 m (10 ft) envelope around equipment and open channel[2,3]			
5	a	PRE-AERATION TANKS Conditioning of wastewater prior to further treatment	Possible ignition of flammable gases and floating flammable liquids	A	Enclosed— entire space	Division 1	NC	H and CGD if enclosed
	b			B		Division 2	NC, LC, or LFS	
	c			Not enclosed, open to atmosphere	Within a 3 m (10 ft) envelope around equipment and open channel[2,3]			

Notes:
(1) The NR designation in the ventilation column indicates that no ventilation requirements are established for the space, and, therefore, Table 9.1.1.4 also has no requirements.
(2) Row and Line columns are used to refer to Figure A.5.2 and specific requirements for each location and function.
(3) The following codes are used in this table:
A: No ventilation or ventilated at less than 12 air changes per hour.
B: Continuously ventilated at 12 changes per hour or in accordance with Chapter 9.
C: Continuously ventilated at six air changes per hour or in accordance with Chapter 9.
CGD: Combustible gas detection system.
D: No ventilation or ventilated at less than six air changes per hour.
FE: Portable fire extinguisher.
H: Hydrant protection in accordance with 7.2.4.
LC: Limited-combustible material.
LFS: Low flame spread material.
NA: Not applicable.
NC: Noncombustible material.
NEC: In accordance with NFPA 70.
NR: No requirement.
[1]Open channels and open structures upstream from the unit processes are classified the same as the downstream processes they supply.
[2]The area beyond the envelope is unclassified.
[3]Where liquid turbulence is not induced by aeration or other factors, the following criteria apply: (1) interior of the tank from the minimum operating water surface to the top of the tank wall; (2) envelope 0.46 m (18 in.) above the top of the tank and extending 0.46 m (18 in.) beyond the exterior wall; (3) envelope 0.46 m (18 in.) above grade extending 3 m (10 ft) horizontally from the exterior tank walls.

(continues)

Copyright National Fire Protection Association
Provided by IHS under license with NFPA
No reproduction or networking permitted without license from IHS
Not for Resale

Table 5.2 *Continued*

Row	Line	Location and Function	Fire and Explosion Hazard	Ventilation	Extent of Classified Area[1]	*NEC*-Area Electrical Classification (All Class I, Group D)	Material of Construction for Buildings or Structures	Fire Protection Measures
6	a	PRIMARY SEDIMENTATION TANKS Separation of floating or settleable solids from raw wastewater	Possible ignition of flammable gases and floating flammable liquids	A	Enclosed— entire space	Division 1	NC	H and CGD if enclosed
	b			B		Division 2	NC, LC, or LFS	
	c			Not enclosed, open to atmosphere	Interior of the tank from the minimum operating water surface to the top of the tank wall; envelope 0.46 m (18 in.) above the top of the tank and extending 0.46 m (18 in.) beyond the exterior wall; envelope 0.46 m (18 in.) above grade extending 3 m (10 ft) horizontally from the exterior tank walls			
7		AERATION BASIN, POND, LAGOON, OXIDATION DITCH, AEROBIC SUSPENDED GROWTH SYSTEMS, SEQUENCING BATCH REACTORS Aerobic treatment of wastewater open to the atmosphere		NA		Unclassified (If process is not preceded by primary sedimentation, see Primary Sedimentation Tanks in Table 5.2 for classification.)	NR	H

Notes:
(1) The NR designation in the ventilation column indicates that no ventilation requirements are established for the space, and, therefore, Table 9.1.1.4 also has no requirements.
(2) Row and Line columns are used to refer to Figure A.5.2 and specific requirements for each location and function.
(3) The following codes are used in this table:
A: No ventilation or ventilated at less than 12 air changes per hour.
B: Continuously ventilated at 12 changes per hour or in accordance with Chapter 9.
C: Continuously ventilated at six air changes per hour or in accordance with Chapter 9.
CGD: Combustible gas detection system.
D: No ventilation or ventilated at less than six air changes per hour.
FE: Portable fire extinguisher.
H: Hydrant protection in accordance with 7.2.4.
LC: Limited-combustible material.
LFS: Low flame spread material.
NA: Not applicable.
NC: Noncombustible material.
NEC: In accordance with NFPA 70.
NR: No requirement.

[1]Open channels and open structures upstream from the unit processes are classified the same as the downstream processes they supply.
[2]The area beyond the envelope is unclassified.
[3]Where liquid turbulence is not induced by aeration or other factors, the following criteria apply: (1) interior of the tank from the minimum operating water surface to the top of the tank wall; (2) envelope 0.46 m (18 in.) above the top of the tank and extending 0.46 m (18 in.) beyond the exterior wall; (3) envelope 0.46 m (18 in.) above grade extending 3 m (10 ft) horizontally from the exterior tank walls.

Copyright National Fire Protection Association
Provided by IHS under license with NFPA
No reproduction or networking permitted without license from IHS
Not for Resale

Table 5.2 *Continued*

Row	Line	Location and Function	Fire and Explosion Hazard	Ventilation	Extent of Classified Area[1]	*NEC*-Area Electrical Classification (All Class I, Group D)	Material of Construction for Buildings or Structures	Fire Protection Measures
8	a	ENCLOSED AERATION BASIN, AEROBIC OR SUSPENDED GROWTH SYSTEMS, MEMBRANE BIOLOGICAL REACTORS Aerobic treatment not preceded by primary treatment	Possible ignition of flammable gases or floating flammable liquids	A (Interior of tank)	Entire enclosed space or tank of system	Division 1	NC	NR
					Exterior of enclosed space or tank, installed in a building	Division 2	NC, LC, or LFS	NR
					Exterior of enclosed space or tank, installed outdoors; envelope 0.46 m (18 in.) surrounding tank	Division 2	NC, LC, or LFS	NR
	b			B (Interior of tank maintained at negative pressure)	Entire enclosed space or tank of system	Division 2	NC, LC, or LFS	NR
					Exterior of enclosed space or tank, installed in a building	Unclassified	NC, LC, or LFS	NR
					Exterior of enclosed space or tank, installed outdoors	Unclassified	NC, LC, or LFS	NR

Notes:
(1) The NR designation in the ventilation column indicates that no ventilation requirements are established for the space, and, therefore, Table 9.1.1.4 also has no requirements.
(2) Row and Line columns are used to refer to Figure A.5.2 and specific requirements for each location and function.
(3) The following codes are used in this table:

A: No ventilation or ventilated at less than 12 air changes per hour.
B: Continuously ventilated at 12 changes per hour or in accordance with Chapter 9.
C: Continuously ventilated at six air changes per hour or in accordance with Chapter 9.
CGD: Combustible gas detection system.
D: No ventilation or ventilated at less than six air changes per hour.
FE: Portable fire extinguisher.
H: Hydrant protection in accordance with 7.2.4.
LC: Limited-combustible material.
LFS: Low flame spread material.
NA: Not applicable.
NC: Noncombustible material.
NEC: In accordance with NFPA 70.
NR: No requirement.

[1]Open channels and open structures upstream from the unit processes are classified the same as the downstream processes they supply.
[2]The area beyond the envelope is unclassified.
[3]Where liquid turbulence is not induced by aeration or other factors, the following criteria apply: (1) interior of the tank from the minimum operating water surface to the top of the tank wall; (2) envelope 0.46 m (18 in.) above the top of the tank and extending 0.46 m (18 in.) beyond the exterior wall; (3) envelope 0.46 m (18 in.) above grade extending 3 m (10 ft) horizontally from the exterior tank walls.

(continues)

Copyright National Fire Protection Association
Provided by IHS under license with NFPA
No reproduction or networking permitted without license from IHS
Not for Resale

Table 5.2 *Continued*

Row	Line	Location and Function	Fire and Explosion Hazard	Ventilation	Extent of Classified Area[1]	*NEC*-Area Electrical Classification (All Class I, Group D)	Material of Construction for Buildings or Structures	Fire Protection Measures
8	c	ENCLOSED AERATION BASIN, AEROBIC OR SUSPENDED GROWTH SYSTEMS, MEMBRANE BIOLOGICAL REACTORS Aerobic treatment not preceded by primary treatment	Possible ignition of flammable gases or floating flammable liquids	Not enclosed, open to atmosphere	Interior of tank from the minimum operating water surface to the top of the tank wall; envelope 0.46 m (18 in.) above the top of the tank and extending 0.46 m (18 in.) beyond exterior wall; envelope 0.46 m (18 in.) above grade and extending 3 m (10 ft) horizontally from the exterior tank walls	Division 2	NC, LC, or LFS	NR
	d	RESIDENTIAL ENCLOSED AERATION BASIN, AEROBIC OR SUSPENDED GROWTH SYSTEMS, MEMBRANE BIOLOGICAL REACTORS Aerobic treatment not preceded by primary treatment, serving one but not more than five dwellings	Possible ignition of flammable gases or floating flammable liquids	A (Interior of tank)	Entire enclosed space or tank of system	Division 2	NC	NR
					Exterior of enclosed space or tank, installed in a building	Unclassified	NC, LC, or LFS	NR
					Exterior of enclosed space or tank, installed outdoors	Unclassified	NC, LC, or LFS	NR

Notes:
(1) The NR designation in the ventilation column indicates that no ventilation requirements are established for the space, and, therefore, Table 9.1.1.4 also has no requirements.
(2) Row and Line columns are used to refer to Figure A.5.2 and specific requirements for each location and function.
(3) The following codes are used in this table:
A: No ventilation or ventilated at less than 12 air changes per hour.
B: Continuously ventilated at 12 changes per hour or in accordance with Chapter 9.
C: Continuously ventilated at six air changes per hour or in accordance with Chapter 9.
CGD: Combustible gas detection system.
D: No ventilation or ventilated at less than six air changes per hour.
FE: Portable fire extinguisher.
H: Hydrant protection in accordance with 7.2.4.
LC: Limited-combustible material.
LFS: Low flame spread material.
NA: Not applicable.
NC: Noncombustible material.
NEC: In accordance with NFPA 70.
NR: No requirement.
[1]Open channels and open structures upstream from the unit processes are classified the same as the downstream processes they supply.
[2]The area beyond the envelope is unclassified.
[3]Where liquid turbulence is not induced by aeration or other factors, the following criteria apply: (1) interior of the tank from the minimum operating water surface to the top of the tank wall; (2) envelope 0.46 m (18 in.) above the top of the tank and extending 0.46 m (18 in.) beyond the exterior wall; (3) envelope 0.46 m (18 in.) above grade extending 3 m (10 ft) horizontally from the exterior tank walls.

Copyright National Fire Protection Association
Provided by IHS under license with NFPA
No reproduction or networking permitted without license from IHS
Not for Resale

Table 5.2 *Continued*

Row	Line	Location and Function	Fire and Explosion Hazard	Ventilation	Extent of Classified Area[1]	*NEC*-Area Electrical Classification (All Class I, Group D)	Material of Construction for Buildings or Structures	Fire Protection Measures
9		ENCLOSED AERATION BASIN OR AEROBIC SUSPENDED GROWTH SYSTEMS Aerobic treatment of wastewater preceded by primary treatment	NA	NR	Entire enclosed space	Unclassified	NC, LC, or LFS	NR
10		TRICKLING FILTER, BIO-TOWER, AEROBIC FIXED-FILM SYSTEMS Aerobic biological treatment of wastewater	Not normally a significant hazard; however, these processes might contain materials that are combustible under certain conditions	NA		Unclassified (If unit process is not preceded by primary sedimentation, see Primary Sedimentation Tanks in Table 5.2 for classification.)	NR	H
11	a	ANAEROBIC TOWERS, ANAEROBIC FIXED-FILM SYSTEM Anaerobic biological treatment if sealed from atmosphere	Normally produces combustible gas as treatment process by-product	NA	Tank interior	Division 1	NC	FE and H
	b				3 m (10 ft) envelope around tank	Division 2	NC, LC, or LFS	
12	a	GAS-HANDLING SYSTEMS FOR LIQUID TREATMENT PROCESSES	Combustible gas, often under pressure	A	Enclosed— entire space	Division 1	NC	FE and H
	b			B		Division 2	NC, LC, or LFS	
	c			Not enclosed, open to atmosphere	Within a 3 m (10 ft) envelope around equipment[2]			

Notes:
(1) The NR designation in the ventilation column indicates that no ventilation requirements are established for the space, and, therefore, Table 9.1.1.4 also has no requirements.
(2) Row and Line columns are used to refer to Figure A.5.2 and specific requirements for each location and function.
(3) The following codes are used in this table:
A: No ventilation or ventilated at less than 12 air changes per hour.
B: Continuously ventilated at 12 changes per hour or in accordance with Chapter 9.
C: Continuously ventilated at six air changes per hour or in accordance with Chapter 9.
CGD: Combustible gas detection system.
D: No ventilation or ventilated at less than six air changes per hour.
FE: Portable fire extinguisher.
H: Hydrant protection in accordance with 7.2.4.
LC: Limited-combustible material.
LFS: Low flame spread material.
NA: Not applicable.
NC: Noncombustible material.
NEC: In accordance with NFPA 70.
NR: No requirement.
[1]Open channels and open structures upstream from the unit processes are classified the same as the downstream processes they supply.
[2]The area beyond the envelope is unclassified.
[3]Where liquid turbulence is not induced by aeration or other factors, the following criteria apply: (1) interior of the tank from the minimum operating water surface to the top of the tank wall; (2) envelope 0.46 m (18 in.) above the top of the tank and extending 0.46 m (18 in.) beyond the exterior wall; (3) envelope 0.46 m (18 in.) above grade extending 3 m (10 ft) horizontally from the exterior tank walls.

(continues)

Copyright National Fire Protection Association
Provided by IHS under license with NFPA
No reproduction or networking permitted without license from IHS
Not for Resale

Table 5.2 *Continued*

Row	Line	Location and Function	Fire and Explosion Hazard	Ventilation	Extent of Classified Area[1]	*NEC*-Area Electrical Classification (All Class I, Group D)	Material of Construction for Buildings or Structures	Fire Protection Measures
13		OXYGEN AERATION TANKS Tanks for aerobic treatment of wastewater using high-purity oxygen rather than air	Ignition of flammable gases and floating flammable liquids in an oxygen-enriched environment	NA	Enclosed space	Division 2 (If unit process is not preceded by primary sedimentation, see Primary Sedimentation Tanks in Table 5.2 for classification.)	Any equipment or material within the reactor space shall be safe for exposure to volatile hydrocarbons in an oxygen-enriched atmosphere	Special provision for LEL monitoring and automatic isolation of equipment and oxygen supply
14		INTERMEDIATE, SECONDARY, OR TERTIARY SEDIMENTATION TANKS Separate floating and settleable solids from wastewater at various treatment stages		NA	NA	Unclassified (If unit process is not preceded by primary sedimentation, see Primary Sedimentation Tanks in Table 5.2 for classification.)	NR	H
15		FLASH MIXER OR FLOCCULATION TANKS Tanks for mixing various treatment chemicals with wastewater		NA	NA	Unclassified (If unit process is not preceded by primary sedimentation, see Primary Sedimentation Tanks in Table 5.2 for classification.)	NR	H
16		NITRIFICATION AND DENITRIFICATION TANKS Tertiary treatment of wastewater to reduce or remove nitrogen		NA	NA	Unclassified (If unit process is not preceded by primary sedimentation, see Primary Sedimentation Tanks in Table 5.2 for classification.)	NR	H

Notes:
(1) The NR designation in the ventilation column indicates that no ventilation requirements are established for the space, and, therefore, Table 9.1.1.4 also has no requirements.
(2) Row and Line columns are used to refer to Figure A.5.2 and specific requirements for each location and function.
(3) The following codes are used in this table:
A: No ventilation or ventilated at less than 12 air changes per hour.
B: Continuously ventilated at 12 changes per hour or in accordance with Chapter 9.
C: Continuously ventilated at six air changes per hour or in accordance with Chapter 9.
CGD: Combustible gas detection system.
D: No ventilation or ventilated at less than six air changes per hour.
FE: Portable fire extinguisher.
H: Hydrant protection in accordance with 7.2.4.
LC: Limited-combustible material.
LFS: Low flame spread material.
NA: Not applicable.
NC: Noncombustible material.
NEC: In accordance with NFPA 70.
NR: No requirement.
[1]Open channels and open structures upstream from the unit processes are classified the same as the downstream processes they supply.
[2]The area beyond the envelope is unclassified.
[3]Where liquid turbulence is not induced by aeration or other factors, the following criteria apply: (1) interior of the tank from the minimum operating water surface to the top of the tank wall; (2) envelope 0.46 m (18 in.) above the top of the tank and extending 0.46 m (18 in.) beyond the exterior wall; (3) envelope 0.46 m (18 in.) above grade extending 3 m (10 ft) horizontally from the exterior tank walls.

Copyright National Fire Protection Association
Provided by IHS under license with NFPA
No reproduction or networking permitted without license from IHS
Not for Resale

Table 5.2 *Continued*

Row	Line	Location and Function	Fire and Explosion Hazard	Ventilation	Extent of Classified Area[1]	*NEC*-Area Electrical Classification (All Class I, Group D)	Material of Construction for Buildings or Structures	Fire Protection Measures
17		BREAKPOINT CHLORINATION TANKS AND CHLORINE CONTACT TANKS Application of chlorine in aqueous solution to wastewater		NA	NA	Unclassified	NR (These unit processes use corrosive chemicals that require the use of specific materials of construction. Special consideration shall be given to these materials of construction.)	H
18		AMMONIA STRIPPING TOWERS	*(See Trickling Filter in Table 5.2.)*	NA	NA	Unclassified	NR (These unit processes use corrosive chemicals. Special consideration shall be given to these materials of construction.)	H
19		INTERMEDIATE OR FINAL PUMPING STATIONS Pump(s) at intermediate stage or end of the treatment process		NA	NA	Unclassified	NR	H
20		GRAVITY AND PRESSURE FILTERS Filtering of treated wastewater through sand or other media		NA	NA	Unclassified	NR	H
21		CARBON COLUMN OR TANKS Vessels containing carbon for tertiary treatment of wastewater	Significant hazard from combustible carbon material	NA	NA	Unclassified	NR	H

Notes:

(1) The NR designation in the ventilation column indicates that no ventilation requirements are established for the space, and, therefore, Table 9.1.1.4 also has no requirements.

(2) Row and Line columns are used to refer to Figure A.5.2 and specific requirements for each location and function.

(3) The following codes are used in this table:

A: No ventilation or ventilated at less than 12 air changes per hour.

B: Continuously ventilated at 12 changes per hour or in accordance with Chapter 9.

C: Continuously ventilated at six air changes per hour or in accordance with Chapter 9.

CGD: Combustible gas detection system.

D: No ventilation or ventilated at less than six air changes per hour.

FE: Portable fire extinguisher.

H: Hydrant protection in accordance with 7.2.4.

LC: Limited-combustible material.

LFS: Low flame spread material.

NA: Not applicable.

NC: Noncombustible material.

NEC: In accordance with NFPA 70.

NR: No requirement.

[1]Open channels and open structures upstream from the unit processes are classified the same as the downstream processes they supply.

[2]The area beyond the envelope is unclassified.

[3]Where liquid turbulence is not induced by aeration or other factors, the following criteria apply: (1) interior of the tank from the minimum operating water surface to the top of the tank wall; (2) envelope 0.46 m (18 in.) above the top of the tank and extending 0.46 m (18 in.) beyond the exterior wall; (3) envelope 0.46 m (18 in.) above grade extending 3 m (10 ft) horizontally from the exterior tank walls.

(continues)

Copyright National Fire Protection Association
Provided by IHS under license with NFPA
No reproduction or networking permitted without license from IHS
Not for Resale

Table 5.2 *Continued*

Row	Line	Location and Function	Fire and Explosion Hazard	Ventilation	Extent of Classified Area[1]	*NEC*-Area Electrical Classification (All Class I, Group D)	Material of Construction for Buildings or Structures	Fire Protection Measures
22		ON-SITE OZONE GENERATION SYSTEM AND OZONE CONTACT TANKS Ozone generation and purification for disinfection of wastewater	Similar to oxygen generation with addition of being highly corrosive *(see Table D.1.1)*	NA	NA	Not covered in this standard	NR	NR
23		BACKWASH WATER AND WASTE BACKWASH WATER HOLDING TANKS Tanks for temporary storage of backwash water	NA	NA	NA	Unclassified	NR	H
24		ULTRAVIOLET DISINFECTION UNIT Disinfection of wastewater by ultraviolet radiation		NA	NA	Unclassified	NR	H
25		EFFLUENT STRUCTURES Various structures conveying treated wastewater away from treatment processes		NA	NA	Unclassified	NR	H

Notes:

(1) The NR designation in the ventilation column indicates that no ventilation requirements are established for the space, and, therefore, Table 9.1.1.4 also has no requirements.

(2) Row and Line columns are used to refer to Figure A.5.2 and specific requirements for each location and function.

(3) The following codes are used in this table:

A: No ventilation or ventilated at less than 12 air changes per hour.

B: Continuously ventilated at 12 changes per hour or in accordance with Chapter 9.

C: Continuously ventilated at six air changes per hour or in accordance with Chapter 9.

CGD: Combustible gas detection system.

D: No ventilation or ventilated at less than six air changes per hour.

FE: Portable fire extinguisher.

H: Hydrant protection in accordance with 7.2.4.

LC: Limited-combustible material.

LFS: Low flame spread material.

NA: Not applicable.

NC: Noncombustible material.

NEC: In accordance with NFPA 70.

NR: No requirement.

[1]Open channels and open structures upstream from the unit processes are classified the same as the downstream processes they supply.

[2]The area beyond the envelope is unclassified.

[3]Where liquid turbulence is not induced by aeration or other factors, the following criteria apply: (1) interior of the tank from the minimum operating water surface to the top of the tank wall; (2) envelope 0.46 m (18 in.) above the top of the tank and extending 0.46 m (18 in.) beyond the exterior wall; (3) envelope 0.46 m (18 in.) above grade extending 3 m (10 ft) horizontally from the exterior tank walls.

Copyright National Fire Protection Association
Provided by IHS under license with NFPA
No reproduction or networking permitted without license from IHS
Not for Resale

Table 5.2 *Continued*

Row	Line	Location and Function	Fire and Explosion Hazard	Ventilation	Extent of Classified Area[1]	*NEC*-Area Electrical Classification (All Class I, Group D)	Material of Construction for Buildings or Structures	Fire Protection Measures
26	a	ODOR-CONTROL SYSTEM AREAS Areas physically separated from processes that house systems handling leakage and ignition of process gases and vapors	Leakage and ignition of flammable gases	D	Entire area if enclosed	Division 2	NC, LC, or LFS	CGD, FDS, and FE
	b			C	Areas within 0.9 m (3 ft) of leakage sources such as fans, dampers, flexible connections, flanges, pressurized unwelded ductwork, and odor-control vessels	Division 2		
	c				Areas beyond 0.9 m (3 ft)	Unclassified		

Notes:
(1) The NR designation in the ventilation column indicates that no ventilation requirements are established for the space, and, therefore, Table 9.1.1.4 also has no requirements.
(2) Row and Line columns are used to refer to Figure A.5.2 and specific requirements for each location and function.
(3) The following codes are used in this table:
A: No ventilation or ventilated at less than 12 air changes per hour.
B: Continuously ventilated at 12 changes per hour or in accordance with Chapter 9.
C: Continuously ventilated at six air changes per hour or in accordance with Chapter 9.
CGD: Combustible gas detection system.
D: No ventilation or ventilated at less than six air changes per hour.
FE: Portable fire extinguisher.
H: Hydrant protection in accordance with 7.2.4.
LC: Limited-combustible material.
LFS: Low flame spread material.
NA: Not applicable.
NC: Noncombustible material.
NEC: In accordance with NFPA 70.
NR: No requirement.
[1]Open channels and open structures upstream from the unit processes are classified the same as the downstream processes they supply.
[2]The area beyond the envelope is unclassified.
[3]Where liquid turbulence is not induced by aeration or other factors, the following criteria apply: (1) interior of the tank from the minimum operating water surface to the top of the tank wall; (2) envelope 0.46 m (18 in.) above the top of the tank and extending 0.46 m (18 in.) beyond the exterior wall; (3) envelope 0.46 m (18 in.) above grade extending 3 m (10 ft) horizontally from the exterior tank walls.

Copyright National Fire Protection Association
Provided by IHS under license with NFPA
No reproduction or networking permitted without license from IHS
Not for Resale

Chapter 6 Solids Treatment Processes

6.1* General.

6.1.1 This chapter shall establish minimum criteria for protection against fire and explosion hazards associated with solids treatment processes.

6.1.2 This chapter shall not apply to the treatment of solids from industrial waste treatment processes.

6.2* Design and Construction. The design and construction of solids treatment processes shall conform to Table 6.2(a) and Table 6.2(b).

Table 6.2(a) Solids Treatment Processes

Row	Line	Location and Function	Fire and Explosion Hazard	Ventilation	Extent of Classified Area	*NEC*-Area Electrical Classification (All Class I, Group D)	Material of Construction for Buildings or Structures	Fire Protection Measures
1		COARSE AND FINE SCREENINGS-HANDLING BUILDINGS Storage, conveying, or dewatering of screenings (no exposed flow of wastewater through building or area)	NA	NR	NA	Unclassified	NC, LC, or LFS	H, FE, and FAS
2		GRIT-HANDLING BUILDING Storage, conveying, and dewatering of heavy small screenings and grit (no exposed flow of wastewater through building or area)	NA	NR	NA	Unclassified	NC, LC, or LFS	H, FE, and FAS
3	a	SCUM-HANDLING BUILDING OR AREA Holding, dewatering, or storage	Possible grease or flammable liquids carryover	A	Enclosed space	Division 2	NC, LC, or LFS	H, FE, and CGD if enclosed
	b			B		Unclassified		
	c			Not enclosed, open to atmosphere	NA			
4	a	SCUM PITS	Buildup of vapors from flammable or combustible liquids	A	Enclosed— entire space	Division 1	NC	H, FE, and CGD if enclosed
	b			B		Division 2	NC, LC, or LFS	
	c			Not enclosed, open to atmosphere	Within a 3 m (10 ft) envelope around equipment and open channel[1]			

Notes:
(1) The NR designation in the ventilation column indicates that no ventilation requirements are established for the space, and, therefore, Table 9.1.1.4 also has no requirements.
(2) Row and Line columns are used to refer to the specific figures in A.6.2 and for specific requirements for each location and function.
(3) The following codes are used in this table:
A: No ventilation or ventilated at less than 12 air changes per hour.
B: Continuously ventilated at 12 air changes per hour or in accordance with Chapter 9.
C: Continuously ventilated at six air changes per hour or in accordance with Chapter 9.
CGD: Combustible gas detection system.
D: No ventilation or ventilated at less than six air changes per hour.
FAS: Fire alarm system.
FDS: Fire detection system.
FE: Portable fire extinguisher.
FSS: Fire suppression system (e.g., automatic sprinkler, water spray, foam, gaseous, or dry chemical).
H: Hydrant protection in accordance with 7.2.4.
LC: Limited-combustible material.
LFS: Low flame spread material.
NA: Not applicable.
NC: Noncombustible material.
NEC: In accordance with NFPA 70.
NNV: Not normally ventilated.
NR: No requirement.
[1]The area beyond the envelope is unclassified.
[2]See NFPA 54, NFPA 82, and NFPA 85.

Copyright National Fire Protection Association
Provided by IHS under license with NFPA
No reproduction or networking permitted without license from IHS
Not for Resale

Table 6.2(a) *Continued*

Row	Line	Location and Function	Fire and Explosion Hazard	Ventilation	Extent of Classified Area	*NEC*-Area Electrical Classification (All Class I, Group D)	Material of Construction for Buildings or Structures	Fire Protection Measures
5	a	SCUM-PUMPING AREAS Pumping of scum, wet side of pumping station	Carryover of floating flammable liquids	A	Enclosed— entire space	Division 1	NC	H, FE, and CGD if enclosed
	b			B		Division 2	NC, LC, or LFS	
	c			Not enclosed, open to atmosphere	Within a 3 m (10 ft) envelope around equipment and open channel[1]			
6	a	SCUM-PUMPING AREAS Pumping of scum, dry side of pumping station	Not significant	D	Enclosed space	Division 2	NC, LC, or LFS	FE
	b			C		Unclassified		
	c			Not enclosed, open to atmosphere	NA			
7		SCUM INCINERATORS[2] Elimination of scum through burning	Firebox explosion from possible carryover of flammable scum	NR	Incinerator area if separated from scum storage	Unclassified	NC, LC, or LFS	FSS (if indoors), H, and FE
8	a	SLUDGE THICKENER (CLARIFIER) Sludge concentration and removal, gravity, or dissolved air flotation	Possible generation of methane from sludge; carryover of floating flammable liquids	A	Enclosed— entire space	Division 1	NC	H, FE, and CGD if enclosed
	b			B		Division 2	NC, LC, or LFS	
	c			Not enclosed, open to atmosphere	Envelope 0.46 m (18 in.) above water surface and 3 m (10 ft) horizontally from wetted walls[1]			

Notes:
(1) The NR designation in the ventilation column indicates that no ventilation requirements are established for the space, and, therefore, Table 9.1.1.4 also has no requirements.
(2) Row and Line columns are used to refer to the specific figures in A.6.2 and for specific requirements for each location and function.
(3) The following codes are used in this table:
A: No ventilation or ventilated at less than 12 air changes per hour.
B: Continuously ventilated at 12 air changes per hour or in accordance with Chapter 9.
C: Continuously ventilated at six air changes per hour or in accordance with Chapter 9.
CGD: Combustible gas detection system.
D: No ventilation or ventilated at less than six air changes per hour.
FAS: Fire alarm system.
FDS: Fire detection system.
FE: Portable fire extinguisher.
FSS: Fire suppression system (e.g., automatic sprinkler, water spray, foam, gaseous, or dry chemical).
H: Hydrant protection in accordance with 7.2.4.
LC: Limited-combustible material.
LFS: Low flame spread material.
NA: Not applicable.
NC: Noncombustible material.
NEC: In accordance with NFPA 70.
NNV: Not normally ventilated.
NR: No requirement.
[1]The area beyond the envelope is unclassified.
[2]See NFPA 54, NFPA 82, and NFPA 85.

(continues)

--`,,```,,,,````-`-`,,`,,`,`,,`---
Copyright National Fire Protection Association
Provided by IHS under license with NFPA
No reproduction or networking permitted without license from IHS
Not for Resale

Table 6.2(a) *Continued*

Row	Line	Location and Function	Fire and Explosion Hazard	Ventilation	Extent of Classified Area	*NEC*-Area Electrical Classification (All Class I, Group D)	Material of Construction for Buildings or Structures	Fire Protection Measures
9	a	SLUDGE PUMPING STATION DRY WELLS Dry side of a sludge pumping station	Buildup of methane gas or flammable vapors	D	Entire dry well when physically separated from a wet well or separate structures	Division 2	NC, LC, or LFS	H and FE
	b			C	Entire dry well when physically separated from a wet well or separate structures	Unclassified		
10	a	SLUDGE STORAGE WET WELLS, PITS, AND HOLDING TANKS Retaining of sludge	Possible generation of methane gas in explosive concentrations; carryover of floating flammable liquids	A	Enclosed— entire space	Division 1	NC	CGD, H, and FE if tank enclosed in structure
	b			B		Division 2	NC, LC, or LFS	
	c			Not enclosed, open to atmosphere	Envelope 0.46 m (18 in.) above water surface and 3 m (10 ft) horizontally from wetted walls[1]			NR
11	a	SLUDGE-BLENDING TANKS AND HOLDING WELLS Retaining of sludge with some agitation	Possible generation of methane gas in explosive concentrations; carryover of floating flammable liquids	A	Enclosed— entire space	Division 1	NC	H, FE, and CGD if tank enclosed in structure
	b			B		Division 2	NC, LC, or LFS	

Notes:
(1) The NR designation in the ventilation column indicates that no ventilation requirements are established for the space, and, therefore, Table 9.1.1.4 also has no requirements.
(2) Row and Line columns are used to refer to the specific figures in A.6.2 and for specific requirements for each location and function.
(3) The following codes are used in this table:
A: No ventilation or ventilated at less than 12 air changes per hour.
B: Continuously ventilated at 12 air changes per hour or in accordance with Chapter 9.
C: Continuously ventilated at six air changes per hour or in accordance with Chapter 9.
CGD: Combustible gas detection system.
D: No ventilation or ventilated at less than six air changes per hour.
FAS: Fire alarm system.
FDS: Fire detection system.
FE: Portable fire extinguisher.
FSS: Fire suppression system (e.g., automatic sprinkler, water spray, foam, gaseous, or dry chemical).
H: Hydrant protection in accordance with 7.2.4.
LC: Limited-combustible material.
LFS: Low flame spread material.
NA: Not applicable.
NC: Noncombustible material.
NEC: In accordance with NFPA 70.
NNV: Not normally ventilated.
NR: No requirement.
[1]The area beyond the envelope is unclassified.
[2]See NFPA 54, NFPA 82, and NFPA 85.

Copyright National Fire Protection Association
Provided by IHS under license with NFPA
No reproduction or networking permitted without license from IHS
Not for Resale

Table 6.2(a) *Continued*

Row	Line	Location and Function	Fire and Explosion Hazard	Ventilation	Extent of Classified Area	*NEC*-Area Electrical Classification (All Class I, Group D)	Material of Construction for Buildings or Structures	Fire Protection Measures
	c			Not enclosed, open to atmosphere	Envelope 0.46 m (18 in.) above water surface and 3 m (10 ft) horizontally from wetted walls[1]			NR
12	a	DEWATERING BUILDINGS CONTAINING CENTRIFUGES, GRAVITY BELT THICKENERS, BELT AND VACUUM FILTERS, AND FILTER PRESSES Removal of water from sludge and the conveyance or storage of sludge cake	NA	NA	NA	Unclassified	NC, LC, or LFS	H, FE, and FAS
	b	Removal of water from sludge and the conveyance of thickened sludge	Accumulation of methane gas	C	Entire room	Unclassified	NC, LC, or LFS	H, FE, and FAS
	c	Storage of dewatered sludge cake and conveyance of thickened sludge	Accumulation of methane gas	D	Entire room	Division 1	NC, LC, or LFS	H, FE, and FAS
13		INCINERATORS[2] AND INCINERATOR BUILDINGS Conveying and burning of sludge cake	Firebox explosion	NR	NA	Unclassified	NC, LC, or LFS	FSS (if indoors), H, and FE
14		HEAT TREATMENT UNITS, LOW- OR HIGH-PRESSURE OXIDATION UNITS Closed oxidation of sludge	None, other than in high-pressure systems	NR	NA	Unclassified	NC, LC, or LFS	H and FE

Notes:
(1) The NR designation in the ventilation column indicates that no ventilation requirements are established for the space, and, therefore, Table 9.1.1.4 also has no requirements.
(2) Row and Line columns are used to refer to the specific figures in A.6.2 and for specific requirements for each location and function.
(3) The following codes are used in this table:
A: No ventilation or ventilated at less than 12 air changes per hour.
B: Continuously ventilated at 12 air changes per hour or in accordance with Chapter 9.
C: Continuously ventilated at six air changes per hour or in accordance with Chapter 9.
CGD: Combustible gas detection system.
D: No ventilation or ventilated at less than six air changes per hour.
FAS: Fire alarm system.
FDS: Fire detection system.
FE: Portable fire extinguisher.
FSS: Fire suppression system (e.g., automatic sprinkler, water spray, foam, gaseous, or dry chemical).
H: Hydrant protection in accordance with 7.2.4.
LC: Limited-combustible material.
LFS: Low flame spread material.
NA: Not applicable.
NC: Noncombustible material.
NEC: In accordance with NFPA 70.
NNV: Not normally ventilated.
NR: No requirement.
[1]The area beyond the envelope is unclassified.
[2]See NFPA 54, NFPA 82, and NFPA 85.

(continues)

Copyright National Fire Protection Association
Provided by IHS under license with NFPA
No reproduction or networking permitted without license from IHS
Not for Resale

Table 6.2(a) *Continued*

Row	Line	Location and Function	Fire and Explosion Hazard	Ventilation	Extent of Classified Area	*NEC*-Area Electrical Classification (All Class I, Group D)	Material of Construction for Buildings or Structures	Fire Protection Measures
15	a	ANAEROBIC DIGESTERS, BOTH FIXED ROOF AND FLOATING COVER Generation of sludge gas from digesting sludge	Leakage of gas from cover, piping, emergency relief valves, and appurtenances	Not enclosed, open to atmosphere	Tank interior; areas above and around digester cover; envelope 3 m (10 ft) above the highest point of cover, when cover is at its maximum elevation, and 1.5 m (5 ft) from any wall	Division 1	NC	H and FE
	b				Envelope 4.6 m (15 ft) above Division 1 area over cover and 1.5 m (5 ft) beyond Division 1 area around tank walls	Division 2		
	c			A	For digester tanks enclosed in a building: tank interior; entire area inside building	Division 1		CGD if enclosed
	d			B	For digester tanks enclosed in a building: tank interior; areas above and around digester cover; envelope 3 m (10 ft) above highest point of cover, when cover is at its maximum elevation, and 1.5 m (5 ft) from any wall of digester tank	Division 1	NC	CGD if enclosed
	e				Remaining space in enclosed area	Division 2	NC, LC, or LFS	

Notes:
(1) The NR designation in the ventilation column indicates that no ventilation requirements are established for the space, and, therefore, Table 9.1.1.4 also has no requirements.
(2) Row and Line columns are used to refer to the specific figures in A.6.2 and for specific requirements for each location and function.
(3) The following codes are used in this table:
A: No ventilation or ventilated at less than 12 air changes per hour.
B: Continuously ventilated at 12 air changes per hour or in accordance with Chapter 9.
C: Continuously ventilated at six air changes per hour or in accordance with Chapter 9.
CGD: Combustible gas detection system.
D: No ventilation or ventilated at less than six air changes per hour.
FAS: Fire alarm system.
FDS: Fire detection system.
FE: Portable fire extinguisher.
FSS: Fire suppression system (e.g., automatic sprinkler, water spray, foam, gaseous, or dry chemical).
H: Hydrant protection in accordance with 7.2.4.
LC: Limited-combustible material.
LFS: Low flame spread material.
NA: Not applicable.
NC: Noncombustible material.
NEC: In accordance with NFPA 70.
NNV: Not normally ventilated.
NR: No requirement.
[1]The area beyond the envelope is unclassified.
[2]See NFPA 54, NFPA 82, and NFPA 85.

Copyright National Fire Protection Association
Provided by IHS under license with NFPA
No reproduction or networking permitted without license from IHS
Not for Resale

Table 6.2(a) *Continued*

Row	Line	Location and Function	Fire and Explosion Hazard	Ventilation	Extent of Classified Area	*NEC*-Area Electrical Classification (All Class I, Group D)	Material of Construction for Buildings or Structures	Fire Protection Measures
16	a	ANAEROBIC DIGESTER CONTROL BUILDING Storage, handling, or burning of sludge gas	Leaking and ignition of sludge gas	A	Entire building	Division 1	NC	CGD, H, and FE
	b			B	Enclosed areas that contain gas-handling equipment	Division 2	NC, LC, or LFS	
	c			C	Physically separated from gas-handling equipment	Unclassified		
17	a	DIGESTER GAS-PROCESSING ROOMS Gas compression, handling, and processing	Sludge gas ignition	A	Entire room	Division 1	NC	CGD, H, and FE
	b			B		Division 2	NC, LC, or LFS	
	c			B	Within 1.5 m (5 ft) of equipment	Division 1		
18		ANAEROBIC DIGESTER GAS STORAGE Storage of sludge gas	Gas storage piping and handling	NNV	Within a 3 m (10 ft) envelope of tanks, valves, and appurtenances	Division 1	NC, LC, or LFS	H, FE, and CGD
19	a	WASTE GAS BURNERS Combusting excess gas	Gas piping and appurtenances	NA	Within 3 m (10 ft) Envelope of all fixtures, appurtenances, and housing	Division 1	NC	
	b				Envelope 4.6 m (19 ft) above Division 1 envelope and 1.5 m (5 ft) on all sides	Division 2	NC	

Notes:
(1) The NR designation in the ventilation column indicates that no ventilation requirements are established for the space, and, therefore, Table 9.1.1.4 also has no requirements.
(2) Row and Line columns are used to refer to the specific figures in A.6.2 and for specific requirements for each location and function.
(3) The following codes are used in this table:
A: No ventilation or ventilated at less than 12 air changes per hour.
B: Continuously ventilated at 12 air changes per hour or in accordance with Chapter 9.
C: Continuously ventilated at six air changes per hour or in accordance with Chapter 9.
CGD: Combustible gas detection system.
D: No ventilation or ventilated at less than six air changes per hour.
FAS: Fire alarm system.
FDS: Fire detection system.
FE: Portable fire extinguisher.
FSS: Fire suppression system (e.g., automatic sprinkler, water spray, foam, gaseous, or dry chemical).
H: Hydrant protection in accordance with 7.2.4.
LC: Limited-combustible material.
LFS: Low flame spread material.
NA: Not applicable.
NC: Noncombustible material.
NEC: In accordance with NFPA 70.
NNV: Not normally ventilated.
NR: No requirement.
[1]The area beyond the envelope is unclassified.
[2]See NFPA 54, NFPA 82, and NFPA 85.

(continues)

Copyright National Fire Protection Association
Provided by IHS under license with NFPA
No reproduction or networking permitted without license from IHS
Not for Resale

Table 6.2(a) *Continued*

Row	Line	Location and Function	Fire and Explosion Hazard	Ventilation	Extent of Classified Area	*NEC*-Area Electrical Classification (All Class I, Group D)	Material of Construction for Buildings or Structures	Fire Protection Measures
20		CHLORINE OXIDATION UNITS Chlorine reaction with sludge	Chlorine is a very strong oxidizing agent	NR	NA	Unclassified	NR (These unit processes use corrosive chemicals that require the use of specific materials of construction. Special consideration shall be given to such materials of construction.)	H and FE
21	a	UNDERGROUND (PIPING) TUNNELS CONTAINING NATURAL GAS PIPING OR SLUDGE GAS PIPING Transmission of gas, sludge, water, air, and steam via piping; also might contain power cable and conduit	Ignition of natural gas or sludge gases	D	Within 3 m (10 ft) of valves and appurtenances	Division 1	NC, LC, or LFS	CGD, FDS, and FE
	b				Entire tunnel	Division 2		
	c			C	Areas within 3 m (10 ft) of valves, meters, gas check valves, condensate traps, and other piping appurtenances			
	d				Areas beyond 3 m (10 ft)	Unclassified		
22		UNDERGROUND (PIPING) TUNNELS NOT CONTAINING NATURAL GAS PIPING OR SLUDGE GAS PIPING Transmission of sludge, water, air, and steam piping; also might contain power cable and conduit	NA	NR	NA	Unclassified	NC, LC, or LFS	FDS and FE

Notes:

(1) The NR designation in the ventilation column indicates that no ventilation requirements are established for the space, and, therefore, Table 9.1.1.4 also has no requirements.

(2) Row and Line columns are used to refer to the specific figures in A.6.2 and for specific requirements for each location and function.

(3) The following codes are used in this table:

A: No ventilation or ventilated at less than 12 air changes per hour.

B: Continuously ventilated at 12 air changes per hour or in accordance with Chapter 9.

C: Continuously ventilated at six air changes per hour or in accordance with Chapter 9.

CGD: Combustible gas detection system.

D: No ventilation or ventilated at less than six air changes per hour.

FAS: Fire alarm system.

FDS: Fire detection system.

FE: Portable fire extinguisher.

FSS: Fire suppression system (e.g., automatic sprinkler, water spray, foam, gaseous, or dry chemical).

H: Hydrant protection in accordance with 7.2.4.

LC: Limited-combustible material.

LFS: Low flame spread material.

NA: Not applicable.

NC: Noncombustible material.

NEC: In accordance with NFPA 70.

NNV: Not normally ventilated.

NR: No requirement.

[1]The area beyond the envelope is unclassified.

[2]See NFPA 54, NFPA 82, and NFPA 85.

Copyright National Fire Protection Association
Provided by IHS under license with NFPA
No reproduction or networking permitted without license from IHS
Not for Resale

Table 6.2(a) *Continued*

Row	Line	Location and Function	Fire and Explosion Hazard	Ventilation	Extent of Classified Area	*NEC*-Area Electrical Classification (All Class I, Group D)	Material of Construction for Buildings or Structures	Fire Protection Measures
23	a	COMPOSTING PILES Aerobic sludge reduction	Liberation of ammonia and toxic gas (composting materials can self-ignite)	D	Enclosed area	Division 2	NC, LC, or LFS	H and FDS
	b			C		Unclassified		
24	a	IN-VESSEL COMPOSTING Aerobic sludge reduction	Liberation of ammonia and toxic gas (composting materials can self-ignite)	As required by process	If enclosed, interior of reactor vessel plus a 3 m (10 ft) envelope around reactor vessel	Division 2	NC	H and FDS
	b				Areas beyond 3 m (10 ft)	Unclassified		
25	a	ODOR-CONTROL SYSTEM AREAS Areas physically separated from processes that house systems handling flammable gases	Leakage and ignition of process gases and vapors	D	Entire area if enclosed	Division 2	NC, LC, or LFS	CGD, FDS, and FE
	b			C	Areas within 0.9 m (3 ft) of leakage sources such as fans, dampers, flexible connections, flanges, pressurized unwelded ductwork, and odor-control vessels	Division 2		
	c				Areas beyond 0.9 m (3 ft)	Unclassified		
26		PUMPING OF DRAINAGE FROM DIGESTED SLUDGE-DEWATERING PROCESSES Pumping of centrate, filtrate, leachate, drying beds, and so forth	NA	NR	NA	Unclassified	NC, LC, or LFS	H

Notes:

(1) The NR designation in the ventilation column indicates that no ventilation requirements are established for the space, and, therefore, Table 9.1.1.4 also has no requirements.

(2) Row and Line columns are used to refer to the specific figures in A.6.2 and for specific requirements for each location and function.

(3) The following codes are used in this table:

A: No ventilation or ventilated at less than 12 air changes per hour.

B: Continuously ventilated at 12 air changes per hour or in accordance with Chapter 9.

C: Continuously ventilated at six air changes per hour or in accordance with Chapter 9.

CGD: Combustible gas detection system.

D: No ventilation or ventilated at less than six air changes per hour.

FAS: Fire alarm system.

FDS: Fire detection system.

FE: Portable fire extinguisher.

FSS: Fire suppression system (e.g., automatic sprinkler, water spray, foam, gaseous, or dry chemical).

H: Hydrant protection in accordance with 7.2.4.

LC: Limited-combustible material.

LFS: Low flame spread material.

NA: Not applicable.

NC: Noncombustible material.

NEC: In accordance with NFPA 70.

NNV: Not normally ventilated.

NR: No requirement.

[1]The area beyond the envelope is unclassified.

[2]See NFPA 54, NFPA 82, and NFPA 85.

Copyright National Fire Protection Association
Provided by IHS under license with NFPA
No reproduction or networking permitted without license from IHS
Not for Resale

Table 6.2(b) Solids Treatment Processes — Sludge Drying

Row	Line	Location and Function	Fire and Explosion Hazard	Ventilation[1]	Extent of Classified Area	*NEC*-Area Electrical Classification (All Class II, Group G)[2]	Material of Construction for Buildings or Structures	Fire Protection Measures
1	a	SLUDGE- DRYING PROCESSES[3]	Potential for ignition of dust	NR	If exposed to combustible particulate solids, entire room[4]	Division 1	NC (Construction in accordance with NFPA 30, NFPA 68, NFPA 69, NFPA 499, and NFPA 654)	H, FAS, and FSS (See NFPA 30, NFPA 61, NFPA 69, NFPA 85, NFPA 499, and NFPA 654)
	b			NR	Areas within equipment processing combustible particulate solids	Division 1		
	c			NR	Areas within 3 m (10 ft) of equipment processing combustible particulate solids	Division 2		
	d			NR	Areas beyond 3 m (10 ft) of equipment processing combustible particulate solids	Unclassified		
2	a	DRIED SLUDGE STORAGE AREAS, IF ENCLOSED	Potential for ignition of dust	NR	If exposed to dried sludge, entire room[4]	Division 1	NC (Construction in accordance with NFPA 68 and NFPA 69, NFPA 499, and NFPA 654)	H, FAS (See NFPA 61, NFPA 69, NFPA 497, and NPFA 654)
	b			NR	Areas within tanks storing dried sludge	Division 1		
	c			NR	Areas within 3 m (10 ft) of tanks storing dried sludge	Division 2		
	d			NR	Areas beyond 3 m (10 ft) of tanks storing dried sludge	Unclassified		

Notes:

(1) The NR designation in the ventilation column indicates that no ventilation requirements are established for the space and, therefore, Table 9.1.1.4 also has no requirements.

(2) The following codes are used in this table:

FAS: Fire alarm system.

FSS: Fire suppression system (e.g., automatic sprinkler, water spray, foam, gaseous, or dry chemical).

H: Hydrant protection in accordance with 7.2.4.

NEC: In accordance with NFPA 70.

NC: Noncombustible material.

NR: No requirement.

[1]For sludge-drying processes that use flammable or combustible liquids, ventilate in accordance with NFPA 30.

[2]Or if acceptable to the authority having jurisdiction with classification in NFPA 499.

[3]See NFPA 54, NFPA 85, NFPA 499, and NFPA 654. For sludge-drying processes that use flammable or combustible liquids, see NFPA 30.

[4]The area beyond the envelope is unclassified.

Copyright National Fire Protection Association
Provided by IHS under license with NFPA
No reproduction or networking permitted without license from IHS
Not for Resale

Chapter 7 Fire and Explosion Prevention and Protection

7.1* Scope. This chapter shall establish minimum requirements for overall protection against fire and explosion hazards in wastewater facilities and associated collection systems.

7.1.1 Gases, liquids, and solids shall be assigned to one of the following two categories:

(1) Flammable/combustible hazards
(2) Safety and health hazards

7.1.2 This standard shall apply to the flammability aspects of a particular substance, process, or area within wastewater and collection facilities.

7.1.3 *NFPA 70E* and NFPA *101*® shall be referenced for additional requirements to protect against safety and health hazards.

7.2 Fire Protection Measures.

7.2.1 General.

7.2.1.1 Collection systems, liquid stream treatment processes, and solids-handling processes shall be provided with fire protection for the fire hazards, as described in Table 4.2, Table 5.2, Table 6.2(a), and Table 6.2(b).

7.2.1.2 Enclosed spaces classified as explosion hazard areas under this document shall be physically separated from all unclassified enclosures.

7.2.1.3 In addition to the fire protection specified in Chapter 8, buildings, structures, and process elements, under some conditions, shall be provided with automatic-extinguishing systems in accordance with this chapter.

7.2.2 Automatic Sprinkler Systems.

7.2.2.1 An automatic sprinkler system, where required by this standard or by referenced publications, shall conform to NFPA 13 and shall be approved by the authority having jurisdiction.

7.2.2.2 Other automatic-extinguishing systems shall be permitted in certain areas of the wastewater treatment plant, such as the following:

(1) Chemical storage
(2) Underground tunnels or structures
(3) Areas where electrical hazard is a principal concern
(4) Areas where water damage would seriously impair the integrity of the treatment plant

7.2.3 Other Automatic-Extinguishing Systems. Where required or used in place of automatic sprinkler systems, special hazard–extinguishing systems and nonwater automatic-extinguishing systems shall be designed, installed, and maintained in accordance with the following standards, as applicable:

(1) NFPA 11
(2) NFPA 12
(3) NFPA 12A
(4) NFPA 15
(5) NFPA 16
(6) NFPA 17
(7) NFPA 2001

7.2.4 Water Supplies, Standpipes, Hose Systems, and Hydrants.

7.2.4.1 Water supplies shall be capable of delivering the total demand of sprinklers, hose streams, and foam systems.

7.2.4.1.1 In areas where there is no public water supply or where the supply is not capable of meeting the total demand required, treatment plant effluent shall be permitted for fire protection use.

7.2.4.1.2 The requirements of the public health authority having jurisdiction shall be determined and followed.

7.2.4.2 Water supplies and hydrants shall be installed in accordance with the following standards, as applicable:

(1) NFPA 22
(2) NFPA 24
(3) NFPA 1142

7.2.4.3 Standpipes and hose systems shall be installed and inspected in accordance with NFPA 14.

7.2.4.4 Where fire pumps are used as a separate and sole source of supply, the system shall provide capacity to meet simultaneous fire water flow requirements for both manual and automatic fire suppression systems and the following shall apply:

(1) A standby power supply shall be provided.
(2) Pumps shall be automatic starting and manual shutdown.
(3) Pumps shall be installed in accordance with NFPA 20.

7.2.5 Portable Fire Extinguishers.

7.2.5.1 Portable fire extinguishers shall be installed, located, and maintained in accordance with NFPA 10.

7.2.5.2 The requirement for portable fire extinguishers shall be permitted to be waived where areas are not commonly occupied and the approval of the authority having jurisdiction has been obtained.

7.3 Fire Detection and Alarm Systems.

7.3.1 Fire detection and alarm systems for each treatment and collection facility area shall be provided as identified in Table 4.2, Table 5.2, Table 6.2(a), and Table 6.2(b) or in accordance with referenced publications.

7.3.2 Fire detection and alarm systems shall be installed and maintained in accordance with *NFPA 72*®.

7.4 Combustible Gas Detection.

7.4.1* Combustible gas detectors shall be located in accordance with Table 4.2, Table 5.2, and Table 6.2(a).

7.4.2* The selection of combustible gas detector types and their placement shall be determined by a qualified person as defined by NFPA 70.

7.4.3 Combustible gas detectors shall be listed.

7.4.4 The installation of combustible gas detectors shall be in accordance with their listing requirements and the manufacturers' instructions.

7.4.5 Combustible gas detection equipment located in hazardous (classified) locations, as defined in accordance with NFPA 70, shall be listed for use in such atmospheres.

7.4.5.1 Detectors located in hazardous (classified) locations shall be set to alarm at 10 percent of the lower explosive limit (LEL) in accordance with the manufacturers' calibration instructions and shall be connected to alarm signaling systems.

7.4.5.2 Where permitted by the authority having jurisdiction, the alarm limits shall be permitted to be set at higher than 10 percent of the explosive limit where experience indicates ambient levels would produce spurious alarms.

Copyright National Fire Protection Association
Provided by IHS under license with NFPA
No reproduction or networking permitted without license from IHS
Not for Resale

7.5 Ventilation Monitoring and Signaling Systems.

7.5.1 All continuous ventilation systems shall be fitted with flow detection devices connected to alarm signaling systems to indicate ventilation system failure.

7.5.2 Local and remote alarms for both ventilation system failure and combustible gas detection shall be provided for all hazardous areas classified in accordance with the following:

(1) Article 500 of NFPA 70
(2) The requirements of Chapters 4, 5, and 6 for pressurization of spaces
(3) Chapter 7 and NFPA 496

7.5.3* The alarms required in 7.5.2 shall be displayed in accordance with Table 7.5.3.

Table 7.5.3 Ventilation System Alarm Devices for Areas Indicated in 7.5.2

Location/Supervision	Alarm Devices and Supervision
Entrance(s) to such spaces*	Visual and audible alarms
Within such spaces	Visual and audible alarms
Local (within treatment plant or building)	Visual and audible alarms
Remote (for distant supervision)	Visual and audible alarms

* Where locations are not constantly attended, the use of a nonaudible signal is permitted if a dual-light system is used. A dual-light system is to include a "go"/"no go" or green light/red light type of warning system instead of the audible alarm.

7.5.3.1 In situations where remote supervision is impractical, a telephone dialer shall be allowed to meet the intent of the remote (for distant supervision) listing in Table 7.5.3.

7.5.4 Signaling systems shall be in accordance with the requirements for supervised signaling systems as set forth in *NFPA 72*.

7.6 Laboratories. Fire protection for laboratories shall be in accordance with NFPA 45.

7.7 Special Fire Protection Measures.

7.7.1 Fire Protection During Construction. Fire protection measures during construction at both new and existing wastewater facilities shall be provided in accordance with NFPA 241.

7.7.2 Lightning Protection. Lightning protection shall be provided in accordance with NFPA 780.

7.7.3 Drainage.

7.7.3.1 Provisions shall be made in all fire areas of the plant for removal of all liquids for containment in the fire area without flooding of equipment and without endangering other areas.

7.7.3.2 The provisions for drainage and any associated drainage facilities shall be sized to simultaneously accommodate all of the following:

(1) The spill of the largest single container of any flammable or combustible liquids in the area
(2) The maximum expected number of fire hose lines [31.5 L/sec (500 gal/min) minimum] operating for a minimum of 10 minutes
(3) The maximum design discharge of fixed fire suppression systems operating for a minimum of 10 minutes

Chapter 8 Materials of Construction

8.1 General.

8.1.1 This chapter shall apply to the selection of materials of construction for buildings, structures, and process elements for protection against fire and explosion in wastewater treatment plants and associated collection systems.

8.1.2 Materials of construction and interior coatings and finishes shall provide a maximum degree of fire resistance with the minimum amount of flame spread and smoke generation associated with a particular application.

8.1.3 Materials shall be selected that reduce or eliminate the effects of fire and explosion by maintaining structural integrity, controlling flame spread and smoke generation, minimizing the release of toxic products of combustion, and maintaining the serviceability and operation of critical processes.

8.1.3.1 The purpose of the criteria for selecting materials of construction shall not be to provide protection of personnel from the risk of exposure to an asphyxiating or toxic atmosphere generated during a fire.

8.1.3.2 Criteria for selecting materials of construction shall not apply to nonprocess contents of the building, structure, or assembly where such contents are not a part of the building, structure, or assembly, including the following:

(1) Equipment or equipment enclosures
(2) Grating, walkways, ladders, railings, weirs, process piping, and appurtenances
(3) Process media
(4) Aeration devices
(5) Slide and sluice gates
(6) Pump packing and seal material
(7) Electrical conduit
(8) Hardware
(9) Liners for basins that are open to the atmosphere
(10) Materials used in rehabilitation or for lining existing sewer pipes
(11) Other components as allowed by the AHJ

8.1.4 In areas where corrosive environments are present, including classified areas, the mitigation of corrosion problems in the selection and use of materials for nonstructural assemblies shall include the use of the following:

(1) Corrosion-resistant metallic or nonmetallic grating
(2) Railings, steps and stairs, conduit
(3) Electric equipment enclosures

8.2 Materials Selection.

8.2.1 Materials shall be selected based on the criteria for a particular application.

8.2.2 Selection criteria shall include the following:

(1) Structural requirements
(2) Location and operating environment
(3) Fire rating
(4) Flame spread value
(5) Smoke density generation factors
(6) Products of combustion
(7) Corrosion resistance

Copyright National Fire Protection Association
Provided by IHS under license with NFPA
No reproduction or networking permitted without license from IHS
Not for Resale

8.2.3 For the purpose of this document, materials of construction shall be divided into the following four basic categories:

(1) Combustible
(2) Noncombustible
(3) Limited-combustible
(4) Low flame spread

8.2.4 Materials of construction used for unit processes located in areas with an NFPA 70 classification of Class I, Division 1 or Division 2, and Class II shall be selected based on an overall evaluation, including the following:

(1) Fire risk of the material attributes
(2) Economic impact of replacing the unit process
(3) Potential environmental dangers caused by having the unit process out of service for an extended period of time due to fire or explosion

8.3 Applications.

8.3.1* Sewers and Appurtenances. Materials of construction for sewers and appurtenances such as maintenance holes, junction chambers, and catch basins shall be based on the results of a written materials risk assessment.

8.3.2 Pumping Facilities. Materials selected for wastewater pumping facilities shall be in accordance with Table 4.2 unless otherwise specified by either of the following:

(1) Where conditions or applications warrant the selection of combustible materials for pumping facilities, the following shall be included as part of the fire risk evaluation:
   (a) Flame spread
   (b) Smoke generation
   (c) Corrosion resistance
   (d) Products of combustion
   (e) Impact of a fire or explosion on the structural integrity and operability of the pumping facility
   (f) Economic and environmental consequences of having the pumping facility out of service
(2) Small aboveground pumping facilities with a floor area of 9.3 m^2 (100 ft^2) or less and physically separated from the wet well and that do not present a fire hazard to other buildings or structures shall be permitted to be constructed of any appropriate materials.

8.3.3 Buildings and Structures.

8.3.3.1 General. Buildings and structures, including domes and covers, shall be constructed of materials in accordance with Table 4.2, Table 5.2, Table 6.2(a), and Table 6.2(b), unless otherwise specified by any of the following:

(1) Where conditions or applications warrant the selection of combustible materials for buildings and structures, the following shall be included as part of the fire risk evaluation:
   (a) Flame spread
   (b) Smoke generation
   (c) Corrosion resistance
   (d) Products of combustion
   (e) Impact of a fire or explosion on structural integrity and operability of the facility
   (f) Economic and environmental consequences of having the facility out of service
(2) Small aboveground buildings and structures, including domes and covers, with a floor or surface area of 9.3 m^2 (100 ft^2) or less that are physically separated from other buildings or structures and that do not present a fire hazard to other buildings or structures shall be permitted to be constructed of any appropriate materials.
(3) Materials other than those required by Table 4.2, Table 5.2, Table 6.2(a), and Table 6.2(b) shall be permitted in buildings or structures that are fully sprinklered in accordance with NFPA 13.

8.3.3.2 Critical Unit Processes.

8.3.3.2.1 Buildings and structures, including domes and covers, containing unit processes that are critical to maintaining the integrity of the treatment plant (e.g., headworks, main pumping facility, primary clarifiers), and that if out of service for even a few hours could permanently damage the environment or endanger public health by allowing the release of raw wastewater or sludge, shall be constructed of materials meeting the definition of noncombustible.

8.3.3.2.2 The requirements of 8.3.3.2.1 shall not apply where otherwise permitted by 8.3.3.1.

8.3.3.2.3 Where structural assemblies and partitions are required in critical unit process areas for fire separation in accordance with the fire risk evaluation, they shall have a minimum 3-hour fire rating.

8.3.3.2.4 Nonstructural assemblies such as ventilation ducts and piping shall be constructed of noncombustible, limited-combustible, or low flame spread materials.

8.3.3.3 Essential Unit Processes.

8.3.3.3.1 Buildings or structures, including domes and covers, containing unit processes that are essential to maintaining the integrity of the treatment plant (e.g., secondary biological treatment, secondary clarifiers, or disinfection facilities), and that if out of service for short periods of time would not permanently damage the environment or endanger public health but would become critical if out of service for several days, shall be constructed of materials meeting the definitions of noncombustible, limited-combustible, or low flame spread.

8.3.3.3.2 The requirements of 8.3.3.3.1 shall not apply where otherwise permitted by 8.3.3.1.

8.3.3.3.3 Where structural assemblies and partitions are used in essential unit process areas for fire separation, they shall have a minimum 2-hour fire rating.

8.3.3.3.4* Nonstructural assemblies such as ventilation ducts and piping shall be constructed of noncombustible, limited-combustible, or low flame spread materials.

8.3.3.4 Other Unit Processes.

8.3.3.4.1 Buildings and structures containing unit processes, including sludge-processing operations, that are not critical or essential to maintaining the integrity of the treatment plant, and that if out of service for long periods of time (i.e., a week or more) would not permanently damage the environment or endanger public health, shall be constructed of materials considered applicable by the authority having jurisdiction.

8.3.3.4.2 The requirements of 8.3.3.4.1 shall not apply where otherwise permitted by 8.3.3.1.

8.3.3.4.3 Where structural assemblies and partitions are used in other unit process areas for fire separation, they shall have a minimum 1-hour fire rating.

8.3.3.4.4 Nonstructural assemblies such as ventilation ducts and piping shall be constructed of materials meeting the definitions of noncombustible, limited-combustible, or low flame spread.

Copyright National Fire Protection Association
Provided by IHS under license with NFPA
No reproduction or networking permitted without license from IHS
Not for Resale

8.3.3.5 Combustible Gas Generation and Combustion Processes.

8.3.3.5.1 Buildings and structures containing unit processes that generate, process, or utilize combustible gases (e.g., anaerobic wastewater treatment processes, anaerobic digesters, compressors, storage spheres, piping, waste gas burners, gas-fired equipment including sludge incinerators) shall be constructed of materials meeting the definition of noncombustible.

8.3.3.5.2 The requirements of 8.3.3.5.1 shall not apply where otherwise permitted by 8.3.3.1.

8.3.3.6 Air Supply and Exhaust.

8.3.3.6.1 Noncombustible, limited-combustible, or low flame spread materials shall be used for air supply and exhaust systems.

8.3.3.6.2 Systems supplying or exhausting air at a rate greater than 56.6 m^3/min (2000 ft^3/min) shall include listed smoke dampers, listed fire dampers, and smoke detection and shall cause the ventilation system to shut down upon detection of smoke.

8.3.3.6.3 Separate smoke ventilation systems shall be used where applicable, unless otherwise permitted by the following:

(1) Smoke venting shall be permitted to be integrated into installed ventilation systems using automatic or manually positioned dampers and motor speed control in accordance with NFPA 90A, and NFPA 204 shall be reviewed for further information.
(2) Smoke venting also shall be permitted to be accomplished through the use of portable smoke ejectors.

8.3.3.7 Miscellaneous Materials.

8.3.3.7.1 Cellular or foamed plastic materials shall only be used in accordance with NFPA *101*® .

8.3.3.7.2 Roof coverings shall be Class A in accordance with NFPA 256.

8.3.3.7.3 Metal roof deck construction shall be Class I or shall be fire classified.

8.3.3.7.4 Class II metal roof deck construction shall be permitted in buildings or structures that are fully sprinklered in accordance with 7.2.2.

Chapter 9 Ventilation

9.1 General.

9.1.1 Requirement Applications.

9.1.1.1 The minimum criteria for ventilation for protection against fire and explosion of wastewater treatment and pumping facilities shall be in accordance with Chapters 6, 7, and 8 for the designated electrical classifications.

9.1.1.2 Where this standard requires certain ventilation practices, they are intended to minimize fire and explosion hazards; these ventilation standards shall not be considered to apply to the protection of personnel from the toxic effects of exposure to gases present or the depletion of oxygen.

9.1.1.3 This chapter shall be limited to the ventilation of enclosed wastewater pumping and process-related areas and does not establish criteria applicable to spaces devoted to administrative areas, laboratories, or other ancillary spaces.

CAUTION: Because of the unpredictable nature of materials and events encountered in the operation of wastewater systems, the ventilation criteria established in this standard might not be adequate for protection against all hazards that might be encountered.

9.1.1.4 Ventilation criteria not addressed by Chapters 4, 5, and 6 shall meet the requirements of Table 9.1.1.4.

9.1.1.5 This chapter shall not apply to at-grade or abovegrade unroofed structures less than 0.6 m (2 ft) deep or 0.6 m (2 ft) to the in-service waterline or to at-grade or abovegrade roofed structures where the following applies:

(1) The roof is at least 3 m (10 ft) above surrounding finished grade.
(2) The structure is open on at least three sides.

9.1.2 Hazardous Classifications. Hazardous classifications as established in Table 4.2, Table 5.2, Table 6.2(a), and Table 6.2(b) shall be permitted to be reduced to a lower classification, including unclassified, with positive pressurization in accordance with both of the following:

(1) Article 500 of NFPA 70
(2) NFPA 496

9.2 Installation.

9.2.1 Ventilation systems serving spaces governed by this standard shall be designed in accordance with NFPA 90A.

9.2.2 NFPA 90A shall not apply to the design of ventilation systems where superseded by a more restrictive provision of this standard.

9.2.3 Ventilation systems serving hazardous areas classified under the provisions of Article 500 of NFPA 70 shall incorporate fans fabricated in accordance with Air Moving and Control Association (AMCA) Type A or Type B spark-resistant construction.

9.2.4 All mechanically ventilated spaces shall be served by both supply and exhaust fans, unless otherwise permitted by the following:

(1) For covered process facilities that are not routinely entered by personnel and where mechanically ventilated, the space shall be permitted to be ventilated by exhaust fans only, and the induced supply (outside) air shall meet the ventilation rate specified in the applicable chapter when determining the area classification.
(2) Small aboveground buildings and structures, including domes and covers, with a floor or surface of 9.3 m^2 (100 ft^2) or less that are physically separated from other buildings or structures and do not present a fire hazard to other buildings or structures shall be permitted to be ventilated by a supply fan only.

9.2.5 Ventilation systems serving unclassified areas adjacent to classified areas shall maintain a differential pressure relative to ambient air pressure of 25 Pa (0.1 in. water column) under all operating conditions.

9.2.6 Ventilation systems serving classified areas shall maintain a differential pressure relative to ambient air pressure of –25 Pa (–0.1 in. water column) under all operating conditions.

9.2.7 Ventilation systems for hazardous areas that are designed to operate intermittently or only when the space is occupied shall not be permitted to be used for the purpose of downgrading the electrical classification of areas. *(See Chapters 4, 5, and 6 for further information.)*

Copyright National Fire Protection Association
Provided by IHS under license with NFPA
No reproduction or networking permitted without license from IHS
Not for Resale

Table 9.1.1.4 Minimum Ventilation Rates

Row	Line	Description	Ventilation Rate, Air Changes per Hour, or Velocity		
			Class I, Division 1	Class I, Division 2	Unclassified
1		Wet wells, screen rooms, and other enclosed spaces with wastewater exposed to the room atmosphere	<12 air changes per hour	12 air changes per hour	—
2		Belowgrade spaces such as dry wells, equipment rooms, tunnels, or galleries:			
	a	With equipment using or processing flammable gas	<12 air changes per hour or <74 ft/min (22.2 m/min) velocity in tunnels or galleries	12 air changes per hour or 74 ft/min (22.2 m/min) velocity in tunnels or galleries	—
	b	With gas piping	—	<6 air changes per hour or <37 ft/min (11 m/min) velocity in tunnels or galleries	6 air changes per hour or 37 ft/min (11 m/min) velocity in tunnels or galleries
	c	Without gas piping	NR for tunnels and galleries	<6 air changes per hour for dry wells; NR for tunnels and galleries	6 air changes per hour for dry wells; NR for tunnels and galleries
3		Abovegrade spaces such as equipment rooms and galleries:			
	a	With equipment using or processing flammable gas	<12 air changes per hour or <74 ft/min (22.2 m/min) velocity for galleries	12 air changes per hour or 74 ft/min (22.2 m/min) velocity in galleries	—
	b	With gas piping	—	<6 air changes per hour or <37 ft/min (11 m/min) velocity in galleries	>6 air changes per hour or >37 ft/min (11 m/min) velocity in galleries
	c	Without gas piping	NR for galleries	NR for galleries	NR for galleries

NR: No requirement.

9.2.8 Air shall be introduced into and exhausted from hazardous areas specified in 9.2.7 in a manner that will encourage scavenging of all portions of the spaces to prevent short-circuiting and to promote the effective removal of both heavier- and lighter-than-air gases and vapors.

9.2.9 Ventilation systems shall not transfer air between unclassified interior spaces and classified interior spaces.

9.2.10 Ventilation systems serving areas governed by this standard shall receive power from electrical equipment that receives power from a primary power source and that also has the means to accept power from alternate power sources.

9.2.10.1 Minimum requirements for the means to accept the alternate source of power shall include connectors that are designed to connect to devices such as standby generators, portable generators, uninterruptible power supplies, and so forth.

9.2.10.2 Automatic or manual switching to a permanent alternate source of power shall also be permitted.

9.2.10.3 Power failure of the primary source shall be alarmed.

9.3 Ventilation Criteria.

9.3.1 Ventilation rates shall be based on air changes per hour and shall be calculated on the basis of the maximum aggregate volume, under normal operating conditions, of the space to be ventilated.

9.3.1.1 Air changes per hour shall be based on 100 percent outside supply air, which shall be exhausted.

9.3.1.2 Ventilation rates shall conform to those listed in Table 9.1.1.4 in order to obtain the lowest area electrical classification possible in accordance with NFPA 70.

Copyright National Fire Protection Association
Provided by IHS under license with NFPA
No reproduction or networking permitted without license from IHS
Not for Resale

9.3.2 Dual ventilation rates for NFPA 70, Class I, Division 1 and Division 2 areas shall be permitted under the provisions of this standard, provided that the following criteria are met:

(1) The low ventilation rate is not less than 50 percent of that specified in Table 9.1.1.4.
(2) The low ventilation rate is in operation only if the supply air temperature is 10°C (50°F) or less.
(3) The high ventilation rate is not less than that specified in Table 9.1.1.4.
(4) The high ventilation rate is in operation whenever the supply air temperature is above 10°C (50°F), whenever the ventilated space is occupied, or whenever activated by approved combustible gas detectors set to function at 10 percent of the lower flammable limit (LFL).

9.3.3* Recirculation of up to 75 percent of the exhaust airflow rate for unclassified areas shall be permitted, provided that the following criteria are met:

(1) The recirculated air and outside airflow rate total is not less than 6 air changes per hour.
(2) Recirculation does not occur during occupancy.
(3) Recirculation does not occur whenever a combustible gas detector senses a lower explosive limit of 10 percent or greater.

Chapter 10 Administrative Controls

10.1 General. This chapter shall establish the procedures and controls necessary for the execution of the fire prevention and fire protection activities and practices for wastewater treatment and collection facilities.

10.2 Management Policy and Direction.

10.2.1* Management shall establish a policy and institute a fire prevention and protection program at each facility.

10.2.2 Combustible materials shall not be stored in areas used for the storage of toxic or reactive chemicals.

10.3* Fire Risk Evaluation. A complete fire risk evaluation shall be performed during the initial design process.

10.4 Fire Prevention Program. Each plant shall establish a fire prevention program that includes all of the following items:

(1) Fire safety information for all employees and contractors that includes, as a minimum, the following:
  (a) Familiarization with fire protection equipment and procedures
  (b) Plant emergency alarms and procedures
  (c) Procedures for reporting a fire
(2) Documented plant inspections, including provisions for handling remedial actions to correct conditions that increase fire hazards
(3) Description of the general housekeeping procedures and the control of transient combustibles, including control of such materials stored in areas containing toxic or reactive chemicals
(4) Control of flammable and combustible liquids and gases in accordance with NFPA 30 and NFPA 54
(5) Control of ignition sources that include smoking, grinding, welding, and cutting in accordance with NFPA 51B
(6) Fire prevention surveillance in accordance with NFPA 601
(7)*Fire report, including an investigation and a statement on the corrective action to be taken

10.5 Water-Based Fire Protection Systems.

10.5.1 Water-based fire protection systems shall include all of the following:

(1) Fire sprinkler systems
(2) Standpipe and hose systems
(3) Water spray fixed systems
(4) Foam-water sprinkler systems
(5) Water supplies that are part of such systems, such as the following:
  (a) Private fire service mains and appurtenances
  (b) Fire pumps and water storage tanks
  (c) Valves that control system flow

10.5.2 All water-based fire protection systems shall be installed in accordance with the manufacturers' specifications and the NFPA standards referenced throughout this document as summarized in Chapter 2.

10.5.3 All water-based fire protection systems shall be inspected, tested, and maintained in accordance with NFPA 25.

10.6 Other Fire Protection and Detection Systems.

10.6.1 All other fire protection and detection systems shall be installed in accordance with the manufacturers' specifications and the NFPA standards referenced throughout this document as summarized in Chapter 2.

10.6.2* All other fire protection and detection systems shall be inspected, tested, and maintained in accordance with the NFPA standards in Chapter 2.

10.6.3 Other fire protection system equipment that is not addressed by an NFPA standard as referenced in Chapter 2 (e.g., combustible gas detectors, radio communications equipment, and flame arresters or flame checks) shall be inspected, tested, and maintained in accordance with the manufacturers' specifications.

10.7* Impairments.

10.7.1 A written procedure in accordance with NFPA 25 shall be established to address impairments of all water-based fire protection systems.

10.7.2 A written procedure that includes the following shall be established to address impairments to other fire protection systems and plant systems that have an impact on the level of fire hazard (e.g., dust collection systems, HVAC systems):

(1) Identification of equipment unavailable for service
(2) Identification of personnel to be notified (e.g., plant fire brigade chief, public fire department)
(3) Provision for an increase in fire surveillance as needed

10.7.3 Following repairs, tests shall be conducted on all affected systems to ensure operation.

10.7.4 Following restoration, all parties previously notified of the impairment shall be notified of the completion of repairs.

10.8 Fire Emergency Plan. A written fire emergency plan shall be developed that includes the following:

(1) Response to fire alarms and fire system supervisory alarms
(2) Notification of personnel identified in the plan
(3) Evacuation from the fire area of employees not directly involved in fire-fighting activities

Copyright National Fire Protection Association
Provided by IHS under license with NFPA
No reproduction or networking permitted without license from IHS
Not for Resale

(4) Coordination with security forces or other designated personnel to admit the public fire department and to control traffic and personnel
(5) Fire extinguishment activities
(6) Operators' duties during fire emergencies in critical areas
(7) Approved breathing apparatus to be provided in critical areas

10.9* Fire Brigades.

10.9.1* If a fire brigade is provided, its organization and training shall be identified in written procedures.

10.9.2 Arrangements shall be made to allow rapid entry into the plant by the municipal fire department, police department, or other authorized personnel in the case of fire or other emergency.

10.9.3 Plant emergency organizations, where provided, shall be instructed and trained in accordance with NFPA 600.

10.10* Polychlorinated Biphenyls. If polychlorinated biphenyls (PCBs) are contained within the wastewater treatment plant, the owner and the local fire officials shall prepare a contingency plan to protect the plant and the collection system from possible contamination in the event that the PCBs or combustion products are leaked or washed into the drains during a fire.

10.11 Fire and Explosion Prevention. The principal control procedures used to minimize potential fire and explosion incidents at wastewater treatment plants shall include the following:

(1)*Ventilation
(2)*Education
(3) Risk management and property conservation programs
(4) Procedures for permitting hot work
(5)*Selection of materials of construction
(6) Selection of equipment

10.11.1 Control of Hazardous Source.

10.11.1.1 In-house training programs [e.g., plant emergency organizations (PEO) and housekeeping or maintenance] that provide information for understanding, identifying, preventing, and handling hazardous sources and situations related to potential fire, explosion, and toxicity problems shall be established for all personnel.

10.11.1.2 Liaison shall be implemented between the local fire department, including other authorized emergency personnel, and wastewater treatment plant safety personnel, so that mutually approved emergency procedures, including familiarity with the plant, are established.

10.11.2 Control of Ignition Sources.

10.11.2.1* Personnel involved shall be educated in the conditions for and the sources of ignition of special hazards and shall be trained for the safe operation of processes.

10.11.2.2 All personnel shall be trained to report faulty equipment, worn static bonding lines, improperly stored chemicals, and other items needing correction.

10.11.3 Hot Work Permits.

10.11.3.1* Welding, cutting, and similar spark-producing operations shall not be permitted until a written permit authorizing such work has been issued.

10.11.3.2 The permit shall be issued by a person in authority following inspection of the area to ensure that the precautions have been taken and will be followed until the job is completed.

Annex A Explanatory Material

Annex A is not a part of the requirements of this NFPA document but is included for informational purposes only. This annex contains explanatory material, numbered to correspond with the applicable text paragraphs.

A.1.1.1 Other NFPA standards should be consulted for additional requirements relating to wastewater treatment and collection facilities.

A.1.3.1 In existing facilities, it is not always practical to apply the provisions of this standard strictly. Physical limitations could necessitate disproportionate effort or expense with little increase in fire protection. In such cases, the authority having jurisdiction should be satisfied that reasonable fire protection is ensured.

In existing facilities, it is the intent that any condition that represents a serious threat to fire protection should be mitigated by application of appropriate safeguards. It is not the intent to require modification for conditions that do not represent a significant threat to fire protection, even though such conditions are not literally in conformance with the fire protection requirements.

A.1.8 For additional information, see NFPA 497 and NFPA 499. Although some of the recommendations of these documents are not applicable to wastewater treatment facilities, both documents do provide useful information.

A.3.2.1 Approved. The National Fire Protection Association does not approve, inspect, or certify any installations, procedures, equipment, or materials; nor does it approve or evaluate testing laboratories. In determining the acceptability of installations, procedures, equipment, or materials, the authority having jurisdiction may base acceptance on compliance with NFPA or other appropriate standards. In the absence of such standards, said authority may require evidence of proper installation, procedure, or use. The authority having jurisdiction may also refer to the listings or labeling practices of an organization that is concerned with product evaluations and is thus in a position to determine compliance with appropriate standards for the current production of listed items.

A.3.2.2 Authority Having Jurisdiction (AHJ). The phrase "authority having jurisdiction," or its acronym AHJ, is used in NFPA documents in a broad manner, since jurisdictions and approval agencies vary, as do their responsibilities. Where public safety is primary, the authority having jurisdiction may be a federal, state, local, or other regional department or individual such as a fire chief; fire marshal; chief of a fire prevention bureau, labor department, or health department; building official; electrical inspector; or others having statutory authority. For insurance purposes, an insurance inspection department, rating bureau, or other insurance company representative may be the authority having jurisdiction. In many circumstances, the property owner or his or her designated agent assumes the role of the authority having jurisdiction; at government installations, the commanding officer or departmental official may be the authority having jurisdiction.

A.3.2.4 Listed. The means for identifying listed equipment may vary for each organization concerned with product evaluation; some organizations do not recognize equipment as listed unless it is also labeled. The authority having jurisdiction should utilize the system employed by the listing organization to identify a listed product.

--`,,```,,,,````-`-`,,`,,`,`,,`---

Copyright National Fire Protection Association
Provided by IHS under license with NFPA
No reproduction or networking permitted without license from IHS
Not for Resale

A.3.3.3 Anaerobic Digestion. Process by-products include a gas containing methane, carbon dioxide, and small quantities of hydrogen sulfide. The digestion tank can have a fixed or floating roof system.

A.3.3.15.1 Gas-Handling Equipment. Gas-handling equipment does not include equipment or devices for the utilization of the gas, such as boilers, engines, and waste gas burners.

A.3.3.20 Fire Barrier. Such barriers might have protected openings. For the purpose of this document, a fire barrier does not meet the requirements of physical separation as defined elsewhere in this document.

A.3.3.29 Fluidized Bed Reactor. Applications include ion exchange, granular activated carbon adsorbers, and some types of furnaces, kilns, and biological contactors.

A.3.3.31 Galleries. Galleries frequently contain gas or other hazardous material transport systems, water, wastewater, sludge piping, electrical wiring, and mechanical or electrical equipment.

A.3.3.32.2 Fuel Gas. See NFPA 54.

A.3.3.32.3 Sewer Gas. The gas might contain trace quantities of methane and hydrogen sulfide, could be low in oxygen, and could be both a fire and life safety hazard.

A.3.3.32.4 Sludge Gas. Sludge gas has a high content of methane, varying amounts of carbon dioxide and hydrogen sulfide, and a small amount of nitrogen. It can be both a fire and life safety hazard.

A.3.3.39.1 Combustible Liquid. Definition applies as determined by the test procedures and apparatus set forth in Section 4.5 of NFPA 30, *Flammable and Combustible Liquids Code*. Combustible liquids are classified as Class II or Class III as follows:

(1) Class II — Any liquid that has a flash point at or above 37.8°C (100°F) and below 60°C (140°F)
(2) Class IIIA — Any liquid that has a flash point at or above 60°C (140°F), but below 93°C (200°F)
(3) Class IIIB — Any liquid that has a flash point at or above 93°C (200°F)

A.3.3.39.2 Flammable Liquid. See NFPA 30.

A.3.3.42.2 Noncombustible Material. Materials that are reported as passing ASTM E 136 should be considered noncombustible materials.

A.3.3.47 Physically Separated. Personnel entry to the separate spaces is by individual, grade-level exterior access ports with no physical connection between the two.

A.3.3.48 Pumping Station. Also called lift station.

A.3.3.50.2 Low Flame Spread Rating. See NFPA 255.

A.3.3.53 Sedimentation. Sedimentation is usually accomplished by reducing the velocity of the liquid below the point at which gravity can transport the suspended material. Also called settling, it can be enhanced by chemical addition, coagulation, and flocculation.

A.3.3.63 Through-Penetration Firestop. See ASTM E 814.

A.3.3.64.3 Sludge Treatment. Sludge treatment can be accomplished by aerobic or anaerobic digestion followed by drying on sand beds, filtering and incineration, filtering and drying, or wet-air oxidation.

A.3.3.71.1 Dry Well. Dry wells can contain accidental leakage of wastewater from shaft seals or occasional spills. A dry well could contain equipment such as pumps, motors, fans, wiring, controls, lights and associated wiring devices, and other accessories.

A.3.3.71.2 Wet Well. A wet well might or might not contain electrical equipment such as pumps, motors, fans, wiring and wiring devices, controls, lights, and other accessories.

A.4.1 Additional information on sources of hazards, sources of ignition, and mitigation measures associated with the collection and transmission of municipal wastewater is contained in Annex D.

A.4.2 See Figure A.4.2(a) through Figure A.4.2(g), which provide examples for Table 4.2.

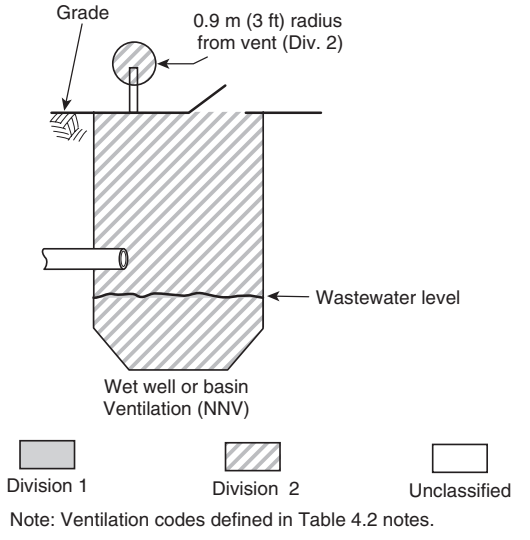

FIGURE A.4.2(a) Wet Well or Basin Serving a Storm Sewer; Illustration of Table 4.2, Row 4.

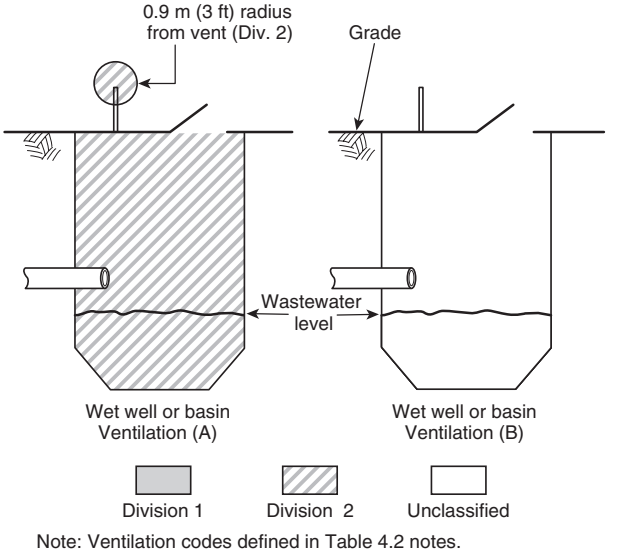

FIGURE A.4.2(b) Wet Well or Basin Serving a Residential Sewer; Illustration of Table 4.2, Row 11.

Copyright National Fire Protection Association
Provided by IHS under license with NFPA
No reproduction or networking permitted without license from IHS
Not for Resale

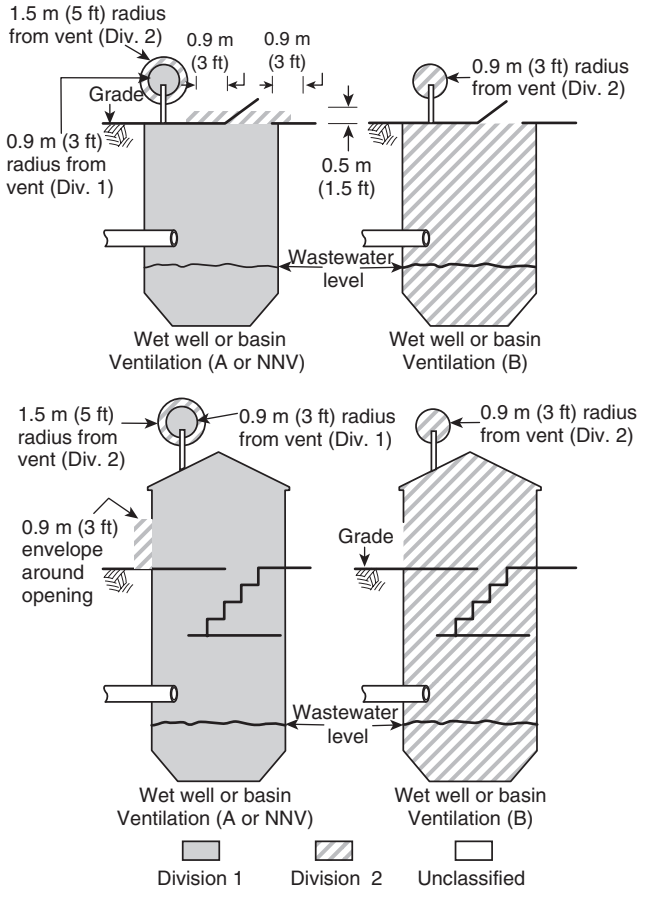

Note: Ventilation codes defined in Table 4.2 notes.

FIGURE A.4.2(c) Wet Well or Basin Serving Separate or Combined Sanitary Sewer; Illustration of Table 4.2, Rows 16 and 34.

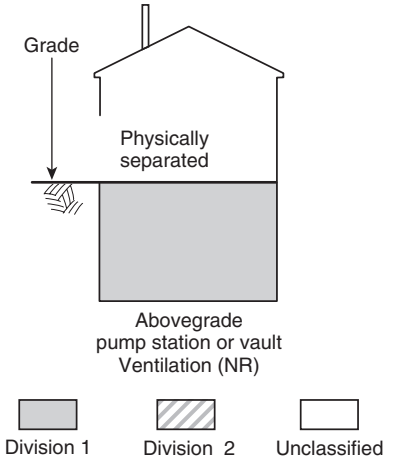

Note: Ventilation codes defined in Table 4.2 notes.

FIGURE A.4.2(d) Abovegrade Equipment Housing or Vault Physically Separated from Wet Well or Basin; Illustration of Table 4.2, Rows 18 and 30.

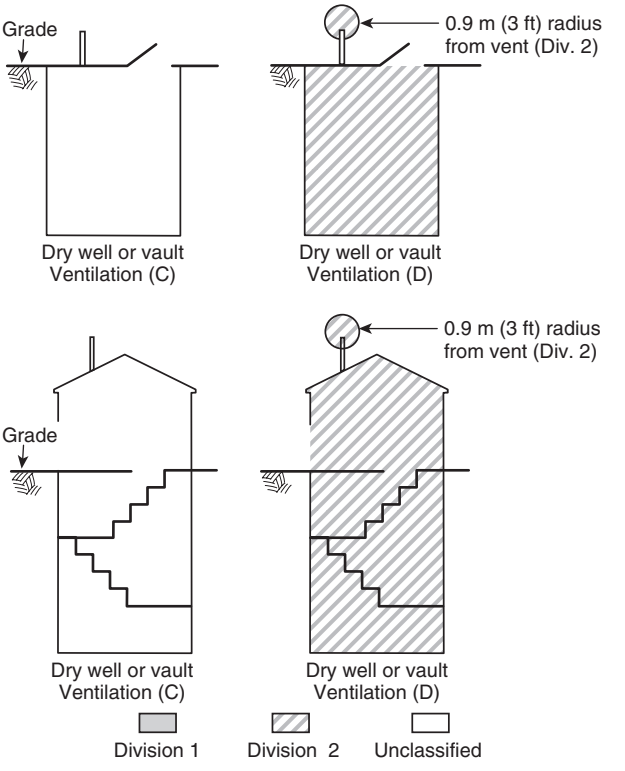

Note: Ventilation codes defined in Table 4.2 notes.

FIGURE A.4.2(e) Belowgrade or Partially Belowgrade Equipment Housing or Vault Physically Separated from Wet Well or Basin; Illustration of Table 4.2, Rows 5, 12, 17, 31, and 36.

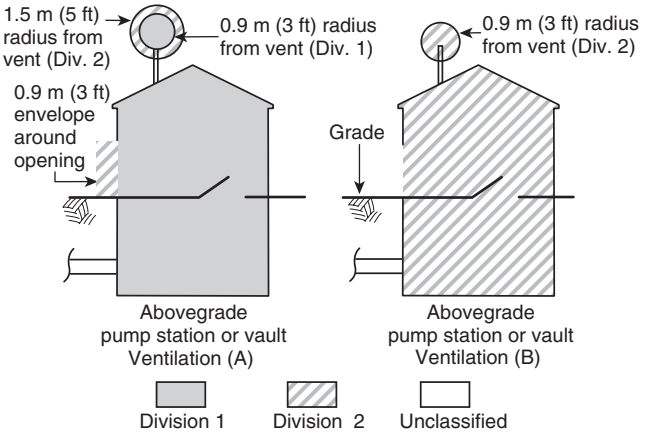

Note: Ventilation codes defined in Table 4.2 notes.

FIGURE A.4.2(f) Abovegrade Equipment Housing or Vault not Physically Separated from Wet Well or Basin; Illustration of Table 4.2, Row 19.

Copyright National Fire Protection Association
Provided by IHS under license with NFPA
No reproduction or networking permitted without license from IHS
Not for Resale

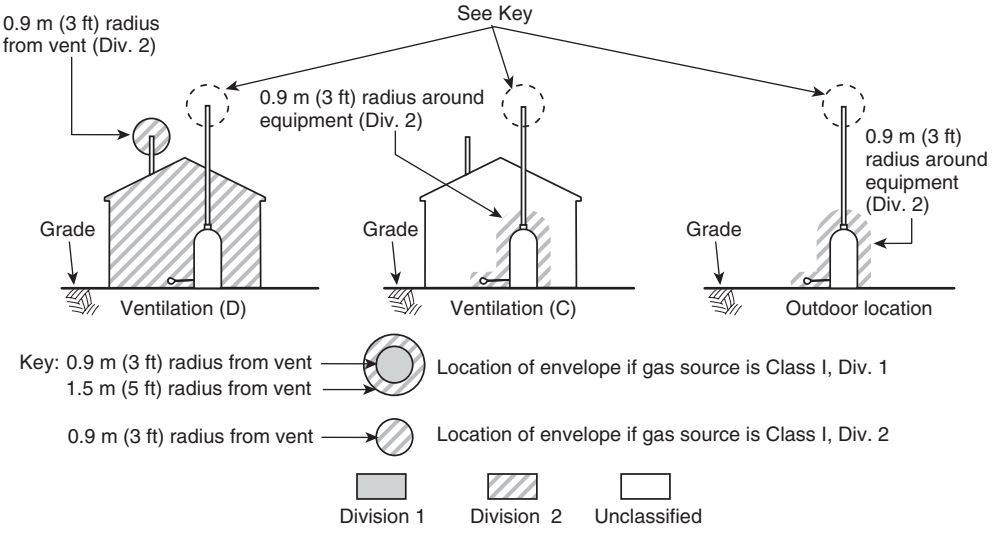

Note: Ventilation codes defined in Table 4.2 notes.

FIGURE A.4.2(g) Odor-Control System Location Physically Separated from Wet Well; Illustration of Table 4.2, Row 20.

A.5.1 Additional information on sources of hazards, sources of ignition, and mitigation measures associated with liquid stream treatment processes is contained in Annex D.

A.5.2 See Figure A.5.2, which provides an example for Table 5.2.

A.6.1 Additional information on sources of hazards, sources of ignition, and mitigation measures associated with solids treatment processes is contained in Annex D.

A.6.2 See Figure A.6.2(a) through Figure A.6.2(g), which provide examples for Table 6.2(a).

A.7.1 Additional information is contained in Annex D.

A.7.4.1 For further information, see NFPA 329.

A.7.4.2 Other types of detectors, such as heat and smoke detectors, have standards recommending spacing usually based on a certain area per detector. There are no known recognized standards or guidelines for the locating or spacing of combustible gas detectors.

Whether natural or mechanical, air movement is a very important consideration in installing combustible gas detectors. This aspect should be carefully investigated, including the effect of doors, windows, vents, and other openings. It could be necessary to conduct a ventilation study that could involve a nontoxic smoke movement analysis.

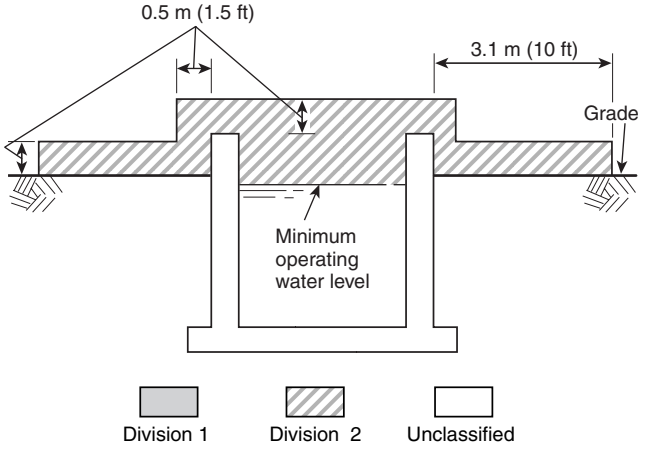

FIGURE A.5.2 Primary Sedimentation Tank; Illustration of Table 5.2, Row 6.

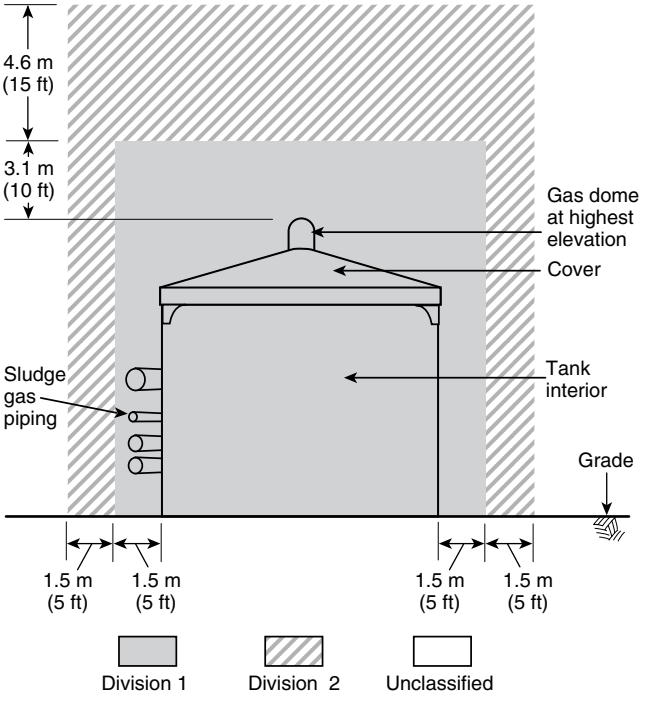

FIGURE A.6.2(a) Anaerobic Digester with Fixed or Floating Cover Above Grade Not Enclosed in a Building; Illustration of Table 6.2(a), Rows 15a and 15b.

Copyright National Fire Protection Association
Provided by IHS under license with NFPA
No reproduction or networking permitted without license from IHS
Not for Resale

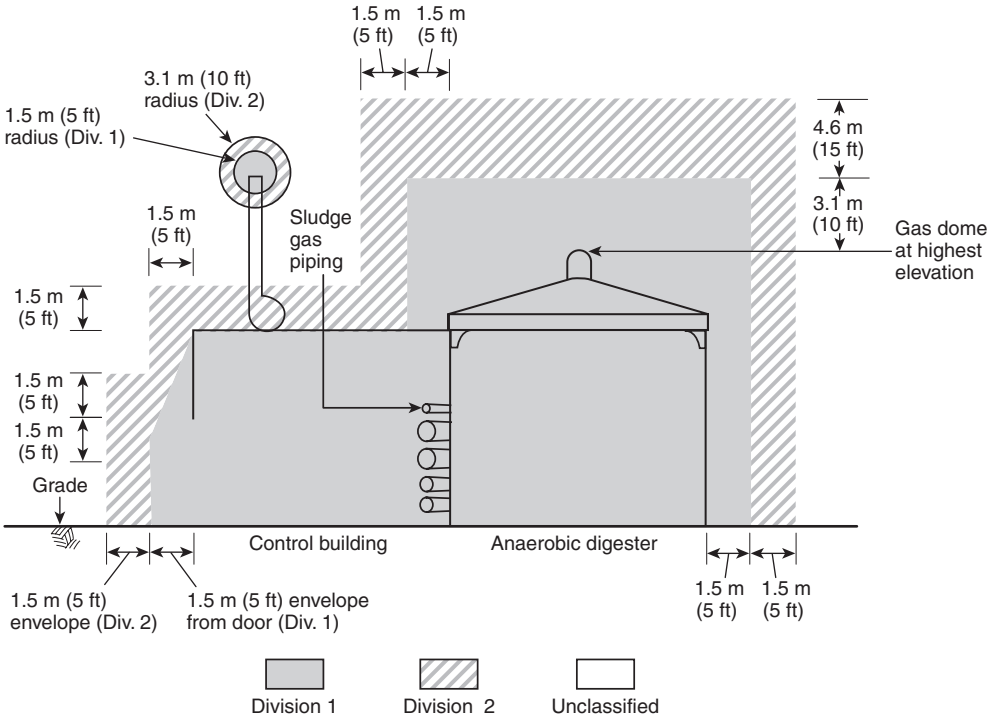

FIGURE A.6.2(b) Anaerobic Digester Control Building Containing Sludge Gas Piping and Using Ventilation Method (A); Illustration of Table 6.2(a), Row 16a.

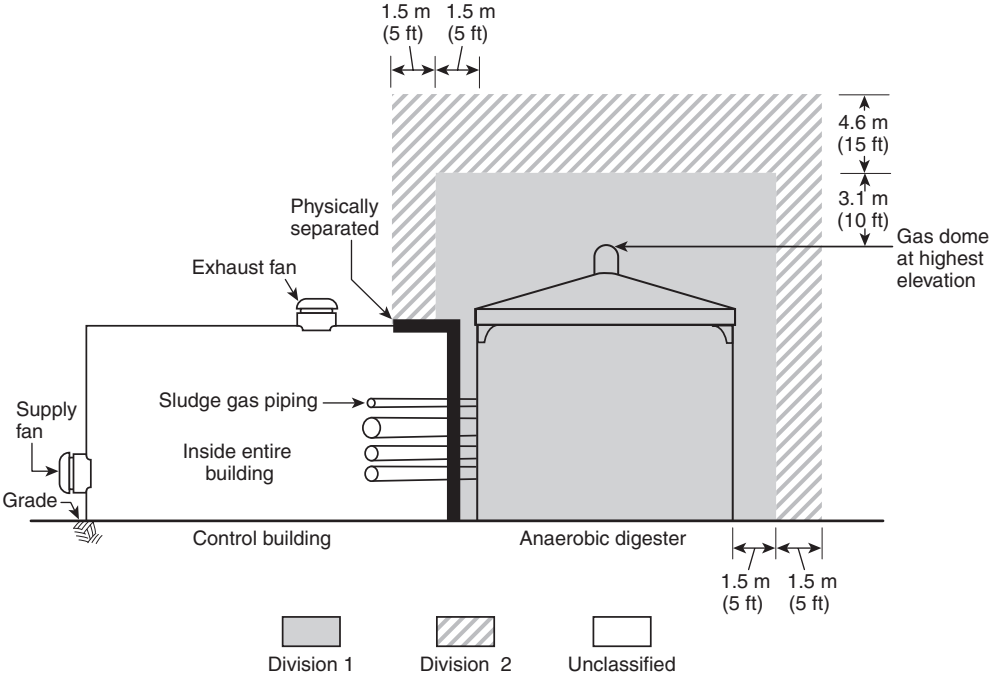

FIGURE A.6.2(c) Anaerobic Digester Control Building Containing Sludge Gas Piping and Using Ventilation Method (C); Illustration of Table 6.2(a), Row 16c.

Copyright National Fire Protection Association
Provided by IHS under license with NFPA
No reproduction or networking permitted without license from IHS
Not for Resale

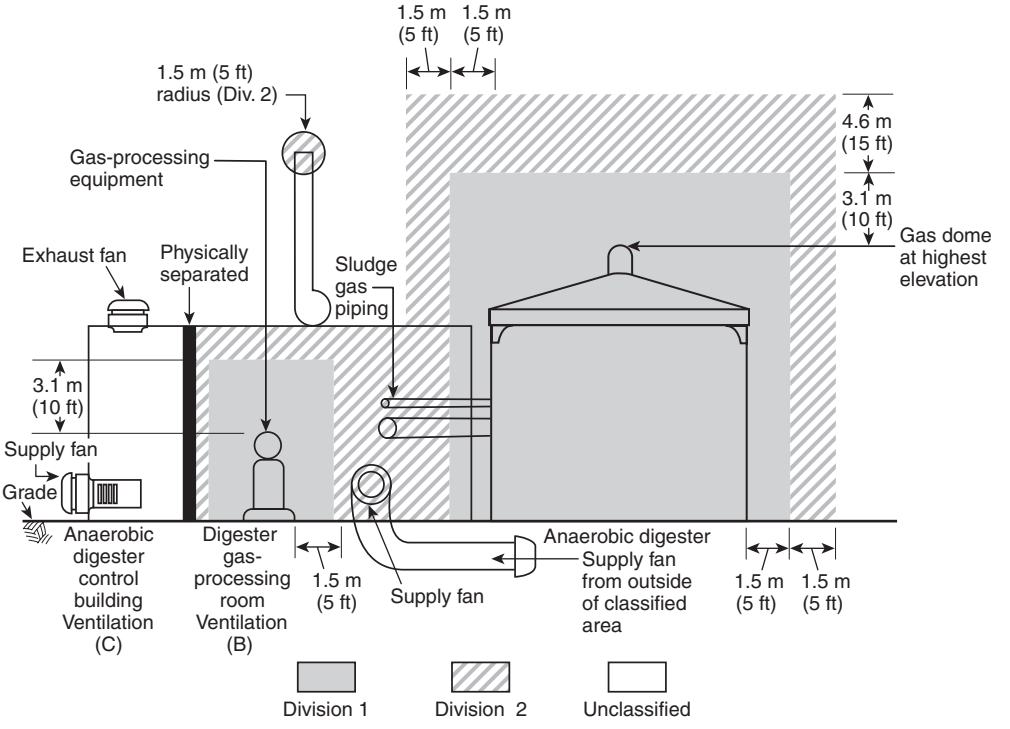

Note: Ventilation codes defined in Table 6.2(a) notes.

FIGURE A.6.2(d) Anaerobic Digester Control Building Containing Sludge Gas–Processing Equipment Physically Separated and Using Ventilation Method (B) for the Processing Room and Ventilation Method (C) for the Control Building; Illustration of Table 6.2(a), Rows 16c and 17b.

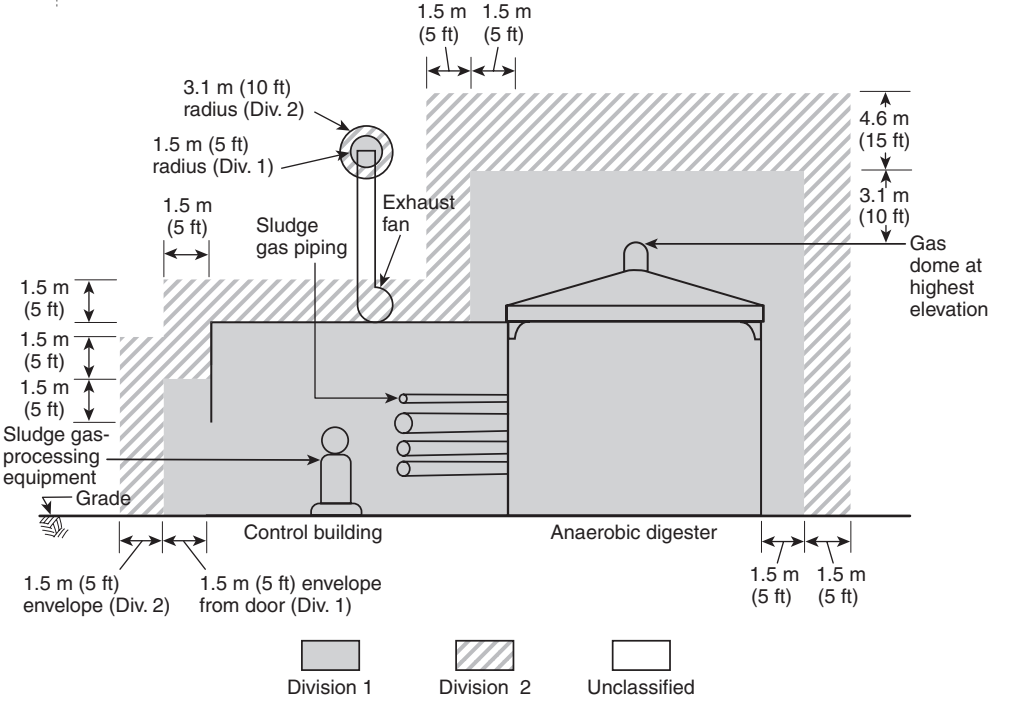

FIGURE A.6.2(e) Anaerobic Digester Control Building Containing Sludge Gas–Processing Equipment not Physically Separated and Using Ventilation Method (A); Illustration of Table 6.2(a), Row 16.

Copyright National Fire Protection Association
Provided by IHS under license with NFPA
No reproduction or networking permitted without license from IHS
Not for Resale

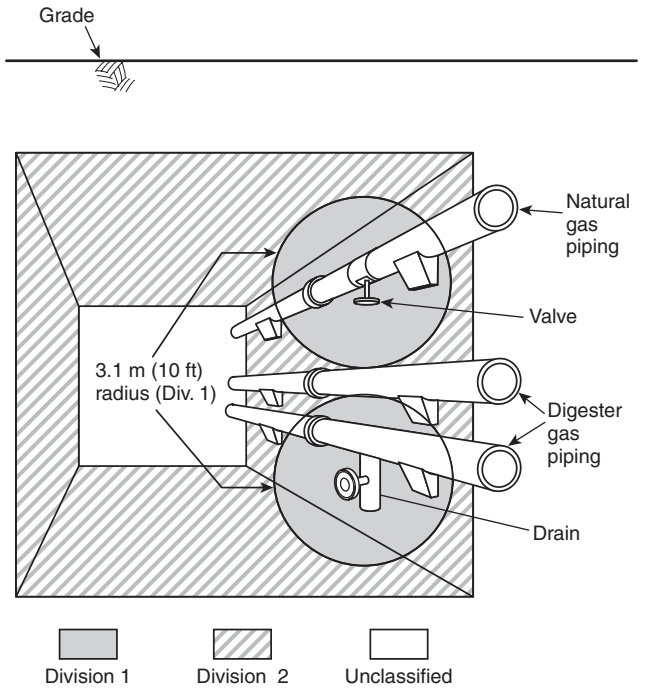

FIGURE A.6.2(f) Underground Tunnel Containing Natural Gas or Sludge Gas Piping and Using Ventilation Method (D); Illustration of Table 6.2(a), Rows 20a and 20b.

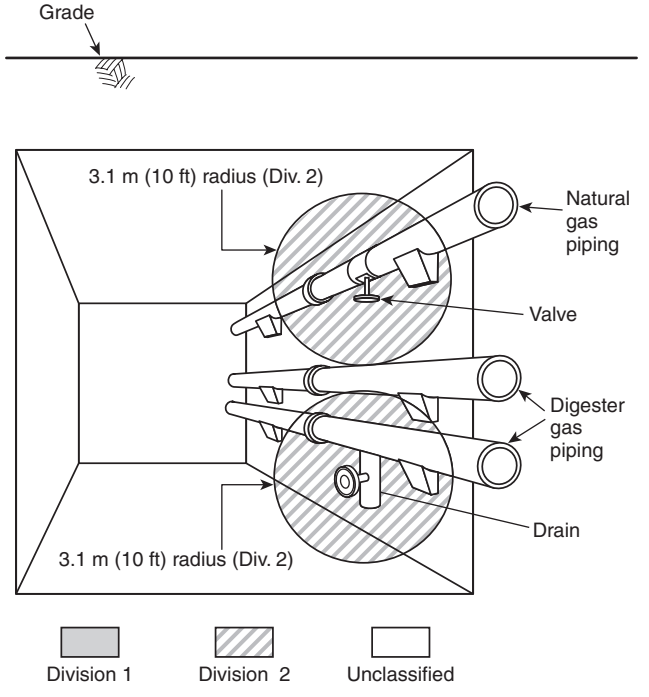

FIGURE A.6.2(g) Underground Tunnel Containing Natural Gas or Sludge Gas Piping and Using Ventilation Method (C); Illustration of Table 6.2(a), Rows 20c and 20d.

Dispersion characteristics can also affect detector placement. Vapors and gases will disperse inversely proportional to their specific density in a quiescent environment. Vapors and gases with densities less than that of air will diffuse quickly at first until the vapor or gas becomes diluted. Heavier-than-air vapors and gases will tend to settle at a low area and not diffuse into the atmosphere unless dispersed by ventilation or temperature currents. Vapors with densities close to that of air will exhibit little mixing effect and will be transported largely by air currents.

There are various types of sensing devices. It is important to select the proper sensing device for each application and for the environment in which it will be placed. Most organic and inorganic compounds can be monitored safely with a catalytic combustion–type sensor. However, organic and metallic solvents containing lead, silicones, plasticizers, or halogens can poison the catalytic element.

A.7.5.3 In all cases, standard "Danger" signs identifying the purpose of the lights and audible alarms and warning against entry when there is an alarm condition should be posted as near as practicable to the warning devices.

A.8.3.1 See Annex C of this document and NFPA 329.

A.8.3.3.3.4 Plastic or fiberglass-reinforced plastic products are often used as materials of construction in unit processes such as rotating biological contactors (RBC), bio-towers, trickling filters, inclined plate (tube) settlers, ventilation ducts, and other equipment that might be subject to corrosion. Under normal operating conditions, these plastic or fiberglass-reinforced plastic materials might be submerged. However, during maintenance or repair, they can become exposed. During maintenance and repair operations, extreme care should be taken with open flame such as cutting torches, because these exposed plastic or fiberglass-reinforced plastic materials might present a considerable fuel load if ignited.

A.9.3.3 Ventilation rates and procedures established by this standard might not be sufficient to protect personnel from exposure to toxic gases that might be present in enclosed spaces.

A.10.2.1 Proper preventive maintenance of operating and fire protection equipment as well as operator training are important aspects of a viable fire prevention program.

A.10.3 A fire risk evaluation of the plant should result in recommendations to integrate the fire prevention and fire protection required in this document into plant-specific considerations regarding design, layout, and anticipated operating requirements. The evaluation should result in a list of recommended fire prevention features to be provided based on acceptable means for the separation or control of common and special hazards, the control or elimination of ignition sources, and the suppression of fires.

This evaluation should focus on materials of construction in ventilation systems and in processes that normally operate in a wet condition — for example, plastic media trickling filters, biotowers, and rotating biological contractors. These systems and process units can represent a considerable fuel load if ignition occurs during operation. Maintenance, fire spread, and smoke production should be considered in the selection of materials.

Consideration should also be given to locating process areas — for example, screen room, areas containing gas management equipment, and so forth — that represent a significant explosion hazard remote from other process areas to reduce the risk of consequent damage if an explosion occurs.

Copyright National Fire Protection Association
Provided by IHS under license with NFPA
No reproduction or networking permitted without license from IHS
Not for Resale

A.10.4(7) For an example of a fire report, see Figure A.10.4(7).

A.10.6.2 Once a detection system is installed, a preventive maintenance program is essential. A detection system is only as good as the care and maintenance it receives, which is especially true in harsh environments. When installing instruments, ease of calibration and maintenance should be considered. Periodic calibration, checks, and adjustments are necessary for detection to remain accurate. If instruments are inaccessible, it is more likely that maintenance procedures will not be followed. Detectors should be located to prevent exposure to physical damage from normal activities in the area.

Consideration should be given to the scope and limitations of the listing for combustible gas detectors. For example, the *Hazardous Location Equipment Directory* by Underwriters Laboratories Inc. offers guidance in maintaining and using combustible gas detectors. The following is extracted from the directory's product category guide for listed gas detectors (JTPX).

> Gas or vapor detectors should be calibrated and inspected by the operator in compliance with the manufacturer's instructions, as performance of the instruments will depend on proper maintenance. The instruments should be calibrated with known gas– or vapor–air mixtures at intervals and particularly after replaceable sensors incorporated in the detecting unit are replaced. Certain gases or vapors can adversely affect (poison) the sensors and limit the use of the instruments. Sampling atmospheres containing gases or vapors for which they have not been previously calibrated should, therefore, be avoided.

A.10.7 Impairments to fire protection systems should be as short in duration as practicable. If the impairment is planned, all necessary parts and manpower should be assembled prior to removing the protection system from service. When an impairment is not planned, the repair work should be expedited until repairs are completed.

A.10.9 The size of the plant and its staff, the complexity of fire-fighting problems, and the availability of a public fire department should determine the requirements for a fire brigade. The organization of a fire brigade is encouraged for wastewater treatment facilities located in remote areas.

If a fire brigade is provided, its organization and training should be identified in written procedures. The recommendations of NFPA 600 and OSHA 29 CFR 1910.156 should be consulted for additional information.

The following paragraphs discuss special fire-fighting conditions unique to wastewater facilities. This information might be useful in fire brigade training and fire preplanning.

Cable tray fires should be handled like any fire involving energized electrical equipment. It might not be practical or desirable to de-energize the cables involved in the fire. Water is the most effective extinguishing agent for cable insulation fires, but it should be applied with an electrically safe nozzle. Some cable insulations [for example, polyvinyl chloride (PVC), neoprene, or Hypalon™] can produce dense smoke in a very short time. In addition, PVC liberates hydrogen chloride (HCl) gas. Self-contained breathing apparatus should be used by personnel attempting to extinguish cable tray fires.

Some sludge-drying and sludge-composting processes (especially solvent extraction drying, sludge-drying kilns, and in-vessel composting systems) might produce a product that might be subject to spontaneous combustion. Generally, water will be the most effective fire-fighting agent in these areas. However, fires might be deep-seated in stockpiled products, which might have to be dispersed with front-end loaders or similar equipment to fully extinguish smoldering and burning material.

Some chlorinated hydrocarbon products commonly used as foam suppressants or flocculation agents in wastewater treatment might cause spontaneous combustion when in contact with powdered disinfectants. These chemicals should be stored separately, and care should be exercised in their use.

Plastic or fiberglass-reinforced plastic materials used in process units or ventilation systems might represent a considerable fuel load if ignited during operation or maintenance and might necessitate special response techniques.

A.10.9.1 NFPA 600 and OSHA 29 CFR 1910.156 should be consulted.

A.10.10 Federal regulations (40 CFR 761.30) specify that the local fire department should be notified of the location of all PCB-filled transformers and other electrical equipment.

A.10.11(1) See Chapter 9 for further information.

A.10.11(2) See NFPA 1 for further information.

A.10.11(5) See Chapter 8 for further information.

A.10.11.2.1 See Section 10.4(6) for further information.

A.10.11.3.1 See NFPA 51B for further information.

Annex B Wastewater Treatment Processes

This annex is not a part of the requirements of this NFPA document but is included for informational purposes only.

B.1 General. Annex B provides a general overview and layout of the unit processes found at a typical wastewater treatment plant, although the arrangement of the unit processes varies from plant to plant.

B.1.1 Wastewater. Wastewater is principally the spent water supply of the community. It is used to flush and transport human wastes and the liquid wastes of commerce, industry, and institutions. Groundwater, surface water, and storm water might also be present. The primary purposes of wastewater treatment are to protect the health and well-being of the community and the quality of the receiving waterway. The extent or completeness of wastewater treatment to accomplish these purposes is governed by legislation and regulations and will vary from jurisdiction to jurisdiction.

B.1.2 Elements of Wastewater Treatment. The principal elements of wastewater treatment are as follows:

(1) Preliminary treatment
(2) Primary treatment
(3) Secondary treatment
(4) Tertiary treatment
(5) Disinfection
(6) Sludge treatment

A typical schematic flow and process diagram for a wastewater treatment plant is shown in Figure B.1.2.

B.2 Preliminary Treatment. Preliminary treatment is the conditioning of wastewater as it enters the wastewater treatment plant. Preliminary treatment removes materials that might be harmful to or might adversely affect the operation of the treatment plant. Such material might include lumber, cardboard, rags, stones, sand, plastic, grease, and scum. The methods and equipment used to remove these materials include bar racks, bar screens, and gravity or aerated grit chambers.

Copyright National Fire Protection Association
Provided by IHS under license with NFPA
No reproduction or networking permitted without license from IHS
Not for Resale

FIRE REPORT

Name of company _____

Date of fire _____ Time of fire _____ Operating facility _____

Under construction? _____

Plant or location where fire occurred _____

Description of facility, fire area, or equipment (include nameplate rating) involved: _____

_____

Cause of fire, such as probable ignition source, initial contributing fuel, equipment failure causing ignition, and so on. _____

Description of fire and events and conditions preceding, during, and after the fire _____

_____

_____

_____

Types and approximate quantities of portable extinguishing equipment used _____

_____

_____

Fire extinguished with portable equipment only? _____ Public fire department called? _____

Employee fire brigade at the location? _____ Qualified for incipient fires? _____

Qualified for interior structural fires? _____

Fixed fire-extinguishing equipment installed? _____

Type of fixed extinguishing system _____

Automatic operation _____ Manually actuated _____ Both _____

Specific types of detection devices _____

Did fixed extinguishing system control fire? _____ Extinguish fire? _____ Control and extinguish fire? _____

Did detection devices and extinguishing system function properly? _____

If not, why not? _____

_____

Estimated direct damage due to fire $ _____ , or between $ _____ and $ _____

Estimated additional (consequential) loss $ _____ Nature of additional loss _____

Estimated time to complete repairs/replacement of damaged equipment/structure _____

Number of persons injured _____ Number of fatalities _____

What corrective or preventive suggestions would you offer to other utilities with similar equipment, structures, or extinguishing systems? _____

_____

Submitted by _____ Title _____

© 2007 National Fire Protection Association NFPA 820

FIGURE A.10.4(7) Sample Fire Report.

Copyright National Fire Protection Association
Provided by IHS under license with NFPA
No reproduction or networking permitted without license from IHS
Not for Resale

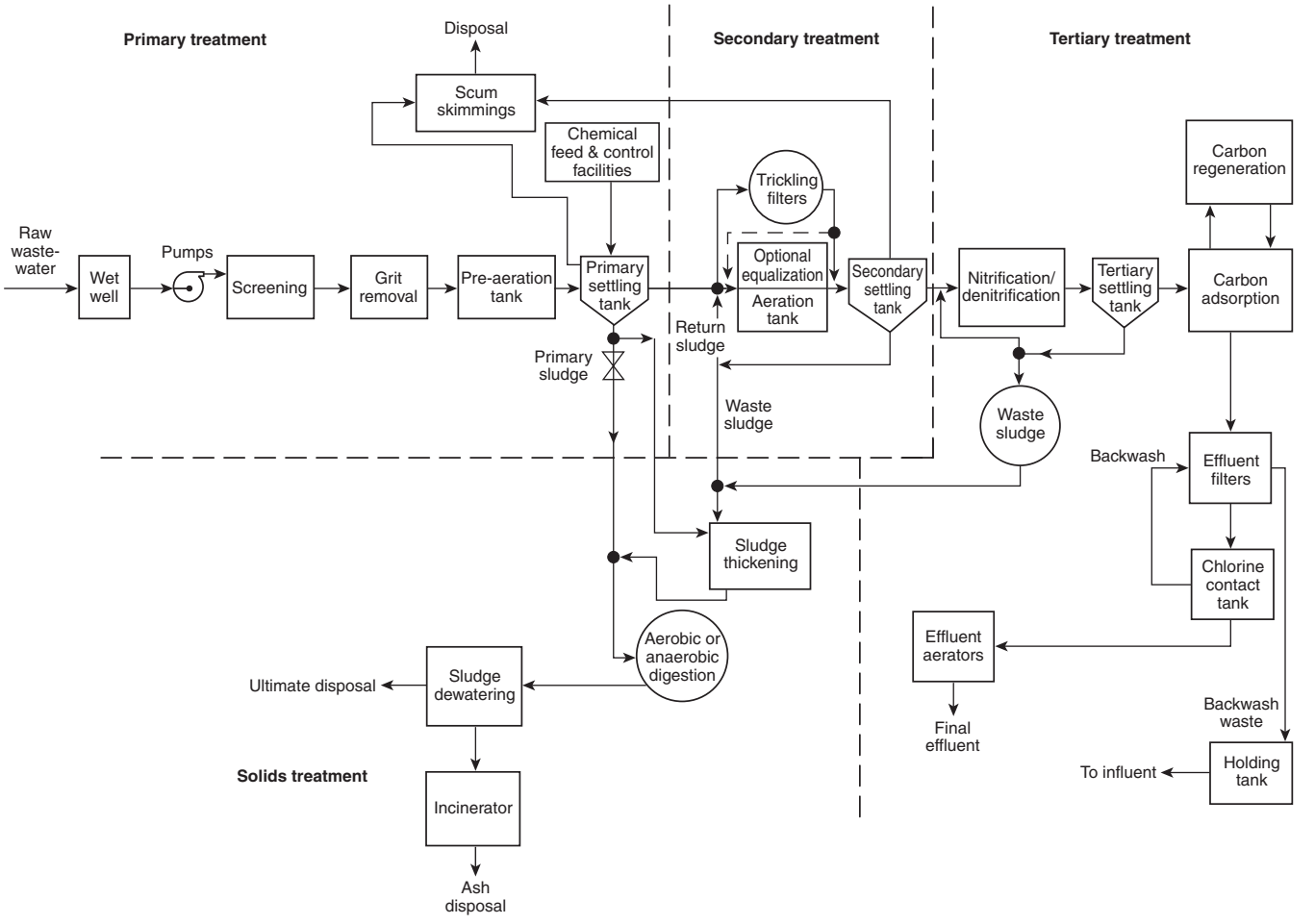

FIGURE B.1.2 Typical Schematic Flow and Process Diagram of a Wastewater Treatment Plant.

B.3 Primary Treatment. Primary treatment is first-stage sedimentation, in which settleable, suspended, and floating material is removed from the wastewater following preliminary treatment. Well-operated primary treatment facilities can remove as much as 60 percent of the influent suspended solids and 30 percent of the influent biochemical oxygen demand. However, primary treatment does not remove colloidal or dissolved solids.

B.4 Secondary Treatment. Secondary treatment is intended to reduce the concentrations of the remaining suspended solids and the dissolved and colloidal organic matter in the wastewater. Such material is not removed to any significant degree in primary treatment. A wastewater treatment plant having secondary treatment following primary treatment commonly can achieve removal of a total of 90 percent of the influent suspended solids and biochemical oxygen demand of the raw wastewater. Secondary treatment processes can be either biological or physical–chemical.

B.4.1 Biological Treatment. Most municipal secondary treatment processes are biological. These processes can be classified as fixed film or suspended growth. In each process, a mixed population of microorganisms is established in the presence of oxygen. These microorganisms metabolize the dissolved organic matter in the wastewater and form a biological mass. The effluent from fixed film or suspended growth processes contains suspensions of biological solids. These solids are removed from the treated wastewater in a secondary sedimentation tank.

B.4.2 Physical–Chemical Treatment. Physical–chemical treatment includes one or more physical–chemical unit processes to treat primary effluent. Such processes might include chemical coagulation, precipitation, and filtration to remove suspended matter and activated carbon adsorption to remove soluble organics.

B.5 Tertiary Treatment. Tertiary treatment is used as necessary to reduce the concentration of inorganic and organic constituents below the concentrations achievable through secondary treatment. Tertiary treatment also includes the removal of nitrogen and phosphorus by additional process unit operations. Tertiary treatment processes can be physical, chemical, biological, or a combination.

B.6 Disinfection. Disinfection is necessary to destroy pathogenic bacteria, viruses, and amoebic cysts commonly found in wastewater. Disinfection processes can be chemical, such as ozonation or chlorination, or physical, such as ultraviolet irradiation. Chemical disinfection using chlorine and, infrequently, ozone are the most widely used means of wastewater disinfection.

Copyright National Fire Protection Association
Provided by IHS under license with NFPA
No reproduction or networking permitted without license from IHS
Not for Resale

B.7 Sludge Treatment.

B.7.1 Sludge Stabilization. Sludge is the settled solids accumulated and subsequently separated from the liquid during various wastewater treatment processes. Sludge handling and disposal is the most difficult, important, and costly part of the wastewater treatment process. Sludge treatment typically consists of stabilization followed by dewatering prior to disposal. Sludge can be stabilized under either anaerobic or aerobic conditions. Anaerobic sludge digestion takes place in the absence of free oxygen. The solid end product of anaerobic digestion is relatively nonputrescible and inoffensive. The off-gas produced in anaerobic sludge digestion contains about 65 percent methane and can be collected and burned as a fuel.

B.7.2 Sludge Dewatering. Both anaerobic and aerobic digestion result in a reduction in the total volume and weight of the excess organic matter. It is often desirable, before final disposal, to reduce the volume and weight of sludge further and to change it from a liquid that is more than 95 percent water to a semisolid form. Dewatering can be accomplished by using drying beds, vacuum filters, centrifuges, filter presses, or mechanical gravity units. The dewatering operation often is enhanced by chemically conditioning the sludge before dewatering. The conditioning can include a thickening step that can be gravity or air flotation. Thermal conditioning can also be used to prepare sludge for dewatering.

B.7.3 Sludge Cake Disposal. After sludge has been dewatered, it is identified as sludge cake. This material is disposed of by several different methods. It can be incinerated to reduce the volume to ash — approximately 10 percent of the original cake. The heat of this combustion can be utilized to produce steam for process and building heat. The cake can be composted to produce a soil conditioner. Cake can be spread directly on land for agricultural use, or it can be landfilled as a waste material.

Annex C Selection of Collection System Materials

This annex is not a part of the requirements of this NFPA document but is included for informational purposes only.

C.1 General. Wastewater collection systems might or might not be vulnerable to the introduction of flammable liquids into the wastewater. These liquids, if lighter than water, will float and collect on the surface. The presence of these materials can present a threat to the integrity of the collection system should ignition occur.

C.2 Materials of Construction.

C.2.1 Some materials commonly used in sewer construction are vulnerable to attack from environmental conditions commonly found in collection systems but might provide resistance to damage from fire. Other materials might be vulnerable to structural damage from fire but provide protection against long-term structural failure from corrosion.

C.2.2 For additional information on corrosion control, see National Association of Corrosion Engineers Recommended Practices RP01 series and the applicable Water Environment Federation publications.

C.3 Materials Risk Assessment.

C.3.1 The materials risk assessment should include an evaluation of all factors that could potentially affect the safety and long-term functioning of the collection system. Factors to be considered should include both of the following:

(1) The potential that flammable liquids can enter the system from identifiable sources. An example is a system serving a combined system or a system serving commercial and industrial dischargers that might be more vulnerable to exposure to floating flammable materials than separate systems serving residential communities.
(2) The potential for the development of conditions that might promote attack to materials vulnerable to corrosive agents. Experience with existing conditions within the community and with existing systems with similar characteristics should be taken into full account when evaluating this factor.

C.3.2 Before the final selection of materials is made, the materials risk assessment should consider the long-term threat that flammable, corrosive, and explosive agents present to the community and to the system's ability to serve the community. It is recommended that the materials risk assessment be presented to local authorities for review and comment before the final selection of materials of construction is completed.

C.4 Examples.

C.4.1 Storm sewers serving locations such as residential areas and areas where significant quantities of flammable or combustible materials are not expected to enter the sewer system, sewers, and appurtenant structures could be constructed of any appropriate material.

C.4.2 Storm sewers serving locations such as commercial and industrial areas or areas where there is a possibility that significant quantities of flammable or combustible materials could enter the sewer system through illicit discharges, curb inlets, leaking underground storage tanks, or broken pipes, sewers, and associated structures might be exposed to considerable risk of fire. Materials meeting the definitions of noncombustible, limited-combustible, or low flame spread might be appropriate.

C.4.3 Where conditions or applications warrant selection of other materials for storm sewer piping and appurtenant structures, consideration of flame spread, smoke generation, and the impact that fire or explosion will have on the structural integrity and operability of the sewer system and the economic and environmental consequences of having the sewer system out of service should be included in the materials risk assessment.

C.4.4 Separate sanitary sewers serving locations such as residential areas and areas where significant quantities of flammable or combustible materials are not expected to enter the sewer system, sewers, and appurtenant structures can be constructed of any appropriate material.

C.4.5 Separate sanitary sewers serving locations such as commercial and industrial areas or areas where there is some possibility that significant quantities of flammable or combustible materials could enter the sewer system from illicit discharges, leaking underground storage tanks, or broken pipes, sewers, and appurtenant structures might be exposed to some risk of fire. Materials meeting the definitions of noncombustible, limited-combustible, or low flame spread might be appropriate.

C.4.6 Where applications warrant selection of other materials for separate sanitary sewer piping and appurtenant structures, consideration of flame spread, smoke generation, and the impact that a fire or explosion will have on the structural integrity and operability of the sewer system and the economic and environmental consequences of having the sewer system out of service should be included in the materials risk assessment.

Copyright National Fire Protection Association
Provided by IHS under license with NFPA
No reproduction or networking permitted without license from IHS
Not for Resale

C.4.7 Where combined sewers are designed to collect both wastewater and storm water, or where there is a possibility that significant quantities of flammable or combustible materials could enter the sewer system by means of curb inlets, illicit discharges, leaking underground storage tanks, or broken pipes, all sewers and other appurtenant structures can be exposed to considerable risk of fire. Materials meeting the definitions of noncombustible, limited-combustible, or low flame spread might be appropriate.

C.4.8 Where conditions or applications warrant selection of other materials for combined sewer piping and appurtenant structures, consideration of flame spread, smoke generation, and the impact that a fire or explosion will have on the structural integrity and operability of the sewer system and the economic and environmental consequences of having the sewer system out of service should be included in the materials risk assessment.

Annex D Chemical and Fuel Fire/Explosion Hazards

This annex is not a part of the requirements of this NFPA document but is included for informational purposes only.

D.1 General Information.

D.1.1 This annex provides guidelines for protection against fire and explosion in the chemical- and fuel-handling and storage facilities. This annex does not include gas utilization equipment, vehicle maintenance areas, or laboratories. Table D.1.1 summarizes the various hazards associated with chemical- and fuel-handling and storage facilities.

D.1.2 This annex also contains additional information on specific areas or unit operations associated with the storage and handling of chemicals and fuels commonly used in municipal wastewater treatment plants.

D.2 Sources of Hazards. See Table D.2 for hazard sources and physical properties.

D.2.1 Fuel Gases. Fuel gases include natural gas, manufactured gas, sewer gas, liquefied petroleum gas–air mixtures, liquefied petroleum gas in the vapor phase, mixtures of these gases, and floating flammable liquids. Some of these gases have specific gravities lower than that of air so that, when released, they will rapidly rise and diffuse above the point of leakage. Flammable mixtures are produced when these gases are mixed with air within certain limits. These mixtures can be considered suffocating gases.

D.2.2 Sludge Gases. Sludge gases are flammable gases that result from the fermentation or anaerobic decomposition of organic matter. Explosive conditions, especially concerning compression and storage, can result when these gases are mixed with air.

D.2.3 Sewer Gases. Sewer gases are flammable gases that result from the fermentation or decomposition of organic matter. Explosive conditions, especially concerning the screening, degritting, and primary clarification processes, might result when these gases are mixed with air.

D.2.4 Unit Processes. Special consideration should be given to items specified in D.2.4.1 through D.2.4.14, which are processes associated with solids treatment.

D.2.4.1 Scum pits collect scum, grease, and other floating flammable liquids from the surface of sedimentation tanks. Special consideration should be given to equipment located in these areas because of potential explosion and fire hazards.

D.2.4.2 Sumps and tanks that collect drainage from anaerobic sludge treatment processes or that store, mix, and blend sludge might also collect significant volumes of sludge gas. Special consideration should be given to equipment located in these areas because of the potential for explosion.

D.2.4.3 Anaerobic digesters are unit processes specifically designed to produce sludge gas from the fermentation or anaerobic decomposition of organic matter. The sludge gas normally contains significant volumes of methane as a by-product of the anaerobic digestion process. Special consideration should be given to equipment located in and around anaerobic digesters because of the potential for explosion.

D.2.4.4 Solvent extraction and dehydration processes can produce a very dry organic dust as a by-product. Special consideration should be given to equipment located in dust-handling areas because of the potential for explosion.

D.2.4.5 Incinerators used to burn scum or sludge cake are ignition sources when in operation. Special consideration should be given to construction of incineration buildings and to storage of combustible materials in incineration areas.

D.2.4.6 Sludge-dewatering and sludge-cake conveyance equipment generate sludge cake and convey it to its final destination (e.g., incineration, landfill). Dried cake can be a combustible material. Special consideration should be given to construction, operation, maintenance, and housekeeping of the equipment and surrounding areas.

D.2.4.7 Pumping stations that handle raw wastewater should be classified in the same manner as wastewater pumping stations *(see Chapter 4)*. In-plant pumping stations should be classified on the basis of their location in the process train and the type of material handled. Restrictive classifications are generally not necessary for pumping stations that handle fully treated wastewater.

D.2.4.8 Grit chambers or screening equipment that is housed in a building or in belowgrade pits might be subject to the same fire and explosion hazards as pumping station wet wells.

D.2.4.9 Imhoff tanks and other similar processes can combine the wastewater liquids and solids treatment streams in a single vessel. Special consideration should be given to equipment located in or around Imhoff tanks or similar processes because of the generation of methane gas from anaerobic solids digestion processes within the vessel and the possibility of volatile substances being released from the wastewater.

D.2.4.10 The primary sedimentation tank might collect and concentrate floating flammable liquids.

D.2.4.11 Secondary and tertiary sedimentation tanks and aeration tanks not preceded by primary sedimentation can be subject to the same fire and explosion hazards as primary sedimentation tanks because of the potential of floating flammable liquids collecting on the surface. Where bypassing of primary sedimentation is possible, although not normally utilized, secondary and tertiary sedimentation tanks and aeration tanks might not be subject to the same fire and explosion potential as primary sedimentation.

Copyright National Fire Protection Association
Provided by IHS under license with NFPA
No reproduction or networking permitted without license from IHS
Not for Resale

Table D.1.1 Chemical and Fuel Fire/Explosion Hazards

Materials and Function	Fire and Explosion Hazard	Ventilation	Extent of Classified Area	*NEC*-Area Electrical Classification (All Class I, Group D)	Material of Construction for Buildings or Structures	Fire Protection Measures
ALCOHOL Used in some tertiary treatment	Flammable vapors	See NFPA 30				
CHLORINE (Gas) Chlorination of water	Aids combustion; oxidizer, toxic	NR	NR	Refer to Chlorine Institute	NR (This equipment handles a corrosive chemical that necessitates the use of specific materials of construction. Special consideration should be given to these materials of construction.)	NR
OXYGEN Used in aeration basins *(See Chapter 3.)*	Aids combustion; oxidizer	See NFPA 55			NR	NR
DIESEL FUEL, GASOLINE, AND MOTOR OILS Fuels for equipment	Various	See NFPA 30			NR	Indoors, FSS and FE; outdoors, FE
LIQUEFIED PETROLEUM GAS	Flammable gas	NR (stored outdoors)		See NFPA 58	NR	FE
OXYGEN GENERATION AND STORAGE	Aids combustion; oxidizer, oxygen-enriched areas	See NFPA 53 and NFPA 55			NR	FSS (if indoors), H, and FE
OZONE GENERATION	Aids combustion; oxidizer, toxic	See NFPA 53 and NFPA 55			NR	FSS (if indoors), H, and FE
ACTIVATED CARBON (powdered or pulverized)	Combustible	NR	NR	NR	NR	NR

Note: The following codes are used in this table:
FE: Portable fire extinguisher.
FSS: Fire suppression system (e.g., automatic sprinkler, water spray, foam, gaseous, or dry chemical).
H: Hydrant protection *(see 7.2.4)*.
NEC: See NFPA 70.
NR: No requirement.

Copyright National Fire Protection Association
Provided by IHS under license with NFPA
No reproduction or networking permitted without license from IHS
Not for Resale

Table D.2 Gases Commonly Found in Wastewater Treatment

Name (Chemical Formula)	Flammable Limits (% vol) LFL	Flammability	UFL	Density[1] Heavier/Lighter Than Air	Sources
Ammonia[2] (NH_3)	15		28	L	Storage tank leaks
Chlorine[3] (Cl_2)		Nonflammable		H	Disinfection processes Storage tanks
Gasoline[2] (C_3H_{12} - C_9H_{20})	1.4		7.6	H	Storage tanks Tank truck spills
Hydrogen chloride (HCl)		Nonflammable		H	Storage tank leaks Ceramic diffuser cleaning
Hydrogen sulfide[2,4] (H_2S)	4.0		44.0	H	Sewer gas Sludge gas
Natural gas[2]	3.8–6.5		13–17	L	Gas-piping leaks
Nitrogen (N_2)		Nonflammable		L	Storage tanks Oxygen generation processes Denitrification processes
Oxygen[3] (O_2)		Nonflammable		H	Generation of oxygen on site Activated sludge processes Storage tanks Sludge processes
Ozone[3] (O_3)		Nonflammable		H	Disinfection processes On-site generation processes
Sewer gas[5]	5.3		19.3	H	Sewer systems
Sludge gas[6]	5		15	L	Sludge digestion processes
Sulfur dioxide (SO_2)		Nonflammable		H	Dechlorination processes Storage tanks

[1] The table lists the physical properties at standard temperature and pressure. Due to actual field conditions, these gases might disperse and might be present throughout the structure.
[2] *Source: Fire Protection Guide to Hazardous Materials.*
[3] These gases accelerate combustion.
[4] Rarely reaches explosive concentration in wastewater treatment plants.
[5] Contains approximately 70 percent carbon dioxide, 5 percent methane, and 25 percent other gases. *(Source: U.S. EPA.)*
[6] Contains approximately 65 percent methane, 30 percent carbon dioxide, and 5 percent other gases. *(Source: U.S. EPA.)*

D.2.4.12 Unit processes employing oxygen-enriched atmospheres necessitate special consideration. Covered facilities might be unclassified above the covering deck. However, any equipment or instrumentation housed under the cover within the reactor space should be suitable for exposure to volatile hydrocarbons in an oxygen-enriched atmosphere. Oxygen itself is not flammable. However, increased concentrations of oxygen greatly increase the fire hazard. Oxygen aeration tanks and other similar processes should be equipped with continuously operating hydrocarbon LFL monitoring devices that will automatically cut off the oxygen supply and purge reactor gases with atmospheric air when 25 percent LFL conditions are registered. With the exception of purging equipment, all associated aeration equipment should automatically shut off, to remove all possible sources of ignition, when 50 percent LFL conditions are registered.

D.2.4.13 Galleries and other connecting structures that contain pipes transporting flammable gases or liquids necessitate special consideration in design and fire protection.

Copyright National Fire Protection Association
Provided by IHS under license with NFPA
No reproduction or networking permitted without license from IHS
Not for Resale

D.2.4.14 Plastic media or wood for trickling filters, rotating biological contactors, bio-towers, and other fixed-film systems are not a significant hazard in normal operations. However, these materials are normally classified as combustible and can contribute a considerable fuel load if ignited under certain conditions, such as during maintenance and construction. Some fixed-film treatment systems are anaerobic and produce a combustible gas by-product, which aggravates the hazard to such enclosures containing these materials.

D.2.5 Chemicals. Wastewater treatment plants use a variety of gaseous, solid, and liquid chemicals that by themselves or when mixed with oxygen or other chemicals can be a potential source of fire, explosion, or both. Additional information can be found in the following documents:

(1) NFPA 45
(2) *Fire Protection Guide to Hazardous Materials*
(3) NFPA 497
(4) NFPA 499

Chemicals should be handled, processed, and stored in a manner that eliminates or significantly reduces the hazard to the wastewater treatment facility and personnel and is acceptable to the authority having jurisdiction. Chemicals should be properly labeled to identify the materials and hazards, and materials safety data sheets should be made available to all personnel.

D.2.6 Hazardous Gases. Sewer and sludge gases are flammable gases generated by the fermentation or decomposition of organic matter. Explosive conditions, especially concerning screening, degritting, primary clarification, and the anaerobic digestion process, can result when these gases are mixed with air. Specialty gases utilized for the following can form flammable/explosive conditions when either acting alone or mixed with other gaseous organic substances:

(1) Laboratory analysis and instrumentation calibration (hydrogen, methane, etc.)
(2) Wastewater treatment plant unit processes (chlorine, ozone, etc.)
(3) Welding operations (acetylene, oxygen, etc.)

Fuel gases, including natural gas, manufactured gas, and liquefied petroleum gas, used as fuels for wastewater treatment plant equipment can cause flammable/explosive conditions when improperly used, handled, or stored. Appropriate measures should be taken to prevent the accumulation of hazardous gases, including ventilation, proper storage, and safe handling/distribution systems. For additional guidance, see NFPA 55 and NFPA 59A. In processes where explosive mixtures cannot be prevented, explosion venting or protection systems should be provided. See NFPA 68 and NFPA 69 for additional guidance.

D.2.7 Liquids. The disposal of waste chemical products through sewers and into wastewater treatment plants, and the disposal of waste chemical products and scum skimmed from sedimentation tanks, can be potential sources or contributing causes of fire and explosive conditions. Hydrocarbon liquids such as gasoline, kerosene, oils, and various chemicals either sent to sewers and drains or used for various applications at wastewater treatment plants can also provide flammable vapor concentrations at certain locations. For additional information, see NFPA 30 and NFPA 329. Areas of wastewater treatment plants as identified and classified in Table 4.2, Table 5.2, Table 6.2(a), and Table 6.2(b), especially areas of primary treatment, should be protected as flammable liquid hazards.

D.2.8 Finely Divided Solids and Dusts. Finely divided solids used in various wastewater treatment processes, especially sludge dehydration processing, or dust by-products produced by such processes can be combustible or cause potential flammable and explosive conditions. Process areas should be cleaned on a regular schedule to prevent the accumulation of hazardous concentrations of dust. Equipment handling finely divided solids should be designed and installed in a manner that protects against the hazards of fire and explosion. Additional information can be found in NFPA 61, NFPA 91, and NFPA 85.

D.2.9 Materials. Certain materials used in wastewater treatment plants because of humid or corrosive atmospheres, including wood, plastic, fiberglass-reinforced plastics (FRPs), paints and coatings, insulating material, and furnishings, can be combustible, limited-combustible, or low flame spread under certain conditions. Some of these materials can present a considerable fuel load if ignited. Buildings and structures should be provided with fire protection in accordance with Chapter 8. Areas where materials are stored should be provided with appropriate fire protection approved by the authority having jurisdiction. For additional guidance, see NFPA 1 and NFPA 13.

D.3 Conditions for and Sources of Ignition. The potential ignition of flammable gases, liquids, and solids, including dusts, that can be found at a wastewater treatment plant is limited by certain fundamental conditions. Gases and generated vapors need to be mixed with air or an oxidizer to form a flammable mixture that needs heat of sufficient intensity for ignition. The ignition temperature of a combustible solid is influenced by the rates of airflow and heating as well as the geometry of the rates of airflow and heating and the geometry of the solid. Ignition can result from one or more of the following causes:

(1) Open flames or hot surfaces
(2) Electrical arc
(3) Sparks
(4) Chemical reaction

D.3.1 Open Flames and Hot Surfaces. Open flames and hot surfaces might be encountered during normal operation, repair and maintenance operations, or with malfunctioning equipment and appliances within a wastewater treatment plant. Sources of ignition might include welding tasks, boilers, incinerators, kerosene-type lanterns, internal combustion engines, and smoking by personnel. Equipment producing open flames or hot surfaces capable of producing ignition should be properly installed, maintained, and isolated from potential hazards. For additional guidance, see the following:

(1) NFPA 31
(2) NFPA 37
(3) NFPA 82
(4) NFPA 85

Smoking should be prohibited in all hazardous areas.

D.3.2 Electrical Arc. Sustained arcing faults can cause extensive damage to electrical switchgear and motor control centers. This arcing might provide sufficient heat to ignite flammable gases or vapors present or generated as a result of the arc (e.g., pyrolysis of insulating material). Electrical equipment should be properly maintained in good operating condition. Faulty equipment should be removed from service. See NFPA 70B for additional guidance.

Copyright National Fire Protection Association
Provided by IHS under license with NFPA
No reproduction or networking permitted without license from IHS
Not for Resale

D.3.3 Sparks. Sparks generated by the following can be a source of ignition for gases of flammable vapors:

(1) Defective or worn electrical and mechanical equipment
(2) Activities performed by personnel
(3) Static electricity

Fire prevention practices to eliminate or control this hazard should include a preventive maintenance program, the use of nonsparking tools, and the provision of bonding and grounding conductors in hazardous areas. See NFPA 77 for additional guidance.

D.3.4 Chemical Reaction. Fire and explosion can be the result of the chemical reaction of the following:

(1) Substances introduced in the wastewater treatment plant influent
(2) Substances used for laboratory analysis
(3) Substances necessary to various unit processes
(4) Substances produced as by-products

Potential chemical reactions can cause hazardous conditions that range in severity from the generation of flames (i.e., spontaneous combustion) to explosion. Chemicals should be identified and stored in a proper manner. Noncompatible chemical combinations should be identified, and segregated storage should be provided. See *Fire Protection Guide to Hazardous Materials* for additional information.

D.4 Mitigation Measures. Mitigation of either hazards or potential ignition sources is achieved with a commonly preferred method of copious flushing with air (i.e., ventilation). In the event that a foreign combustible material enters the sewer system, removal by vacuum or coverage with foam might become necessary. Whenever possible, such entry is to be avoided by containment and adsorption. Appropriate use of a combustible gas detector is warranted as a minimal precaution preceding personnel entry into a collection system. The presence of toxic gases should be considered when personnel enter any confined space.

D.5 Storage and Production Facilities. Special consideration should be given to the following facilities associated with the storage and production of chemicals and fuels used in the treatment of municipal wastewater.

D.5.1 Oxygen generation, storage, and handling facilities necessitate special consideration. Although oxygen is not itself flammable, it does support combustion, and increased concentration of oxygen greatly increases the fire hazard. See NFPA 50.

D.5.2 Ozone is generated by passing oxygen through an electric field. As with oxygen-generating facilities, there is an increased fire hazard. Ozonation facilities necessitate special consideration because of the extreme heat and electric field generated and the additional concern for the extreme corrosivity and toxicity of ozone. See NFPA 55.

D.5.3 Chlorine is a very reactive chemical and necessitates special consideration in storing and handling. Chlorine in combination with other chemicals can produce sufficient heat to cause combustion of flammable materials. Chlorine and other reactive chemicals should always be stored separately. *(See information from the Chlorine Institute, Properties of Chlorine.)*

D.5.4 Activated carbon stored in bulk or in bags can provide a source of combustible material that can add a considerable fuel load if ignited. Special consideration should be given to equipment located in activated carbon-handling areas or activated carbon storage facilities because of the potential for fire.

Annex E List of Associations with Their Abbreviations

This annex is not a part of the requirements of this NFPA document but is included for informational purposes only.

E.1 Association Addresses. The associations and their addresses are as follows.

(1) American National Standards Institute, Inc. (ANSI), 25 West 43rd Street, 4th Floor, New York, NY 10036.
(2) Environmental Protection Agency (EPA), Municipal Technology Branch (4204), Ariel Rios Building, 1200 Pennsylvania Avenue, N.W., Washington, DC 20460.
(3) FM Global, 1301 Atwood Avenue, P.O. Box 7500, Johnston, RI 02919.
(4) National Fire Protection Association (NFPA), 1 Batterymarch Park, Quincy, MA 02169-7471.
(5) Occupational Safety and Health Administration (OSHA), U.S. Department of Labor, 200 Constitution Avenue, NW, Washington, DC 20210.
(6) Underwriters Laboratories Inc. (UL), 333 Pfingsten Road, Northbrook, IL 60062-2096.

Annex F Informational References

F.1 Referenced Publications. The documents or portions thereof listed in this annex are referenced within the informational sections of this standard and are not part of the requirements of this document unless also listed in Chapter 2 for other reasons.

F.1.1 NFPA Publications. National Fire Protection Association, 1 Batterymarch Park, Quincy, MA 02169-7471.

NFPA 1, *Uniform Fire Code*™, 2006 edition.

NFPA 13, *Standard for the Installation of Sprinkler Systems*, 2007 edition.

NFPA 30, *Flammable and Combustible Liquids Code*, 2008 edition.

NFPA 31, *Standard for the Installation of Oil-Burning Equipment*, 2006 edition.

NFPA 37, *Standard for the Installation and Use of Stationary Combustion Engines and Gas Turbines*, 2006 edition.

NFPA 45, *Standard on Fire Protection for Laboratories Using Chemicals*, 2004 edition.

NFPA 51B, *Standard for Fire Prevention During Welding, Cutting, and Other Hot Work*, 2003 edition.

NFPA 53, *Recommended Practice on Materials, Equipment, and Systems Used in Oxygen-Enriched Atmospheres*, 2004 edition.

NFPA 54, *National Fuel Gas Code*, 2006 edition.

NFPA 55, *Standard for the Storage, Use, and Handling of Compressed Gases and Cryogenic Fluids in Portable and Stationary Containers, Cylinders, and Tanks*, 2005 edition.

NFPA 58, *Liquefied Petroleum Gas Code*, 2008 edition.

NFPA 59A, *Standard for the Production, Storage, and Handling of Liquefied Natural Gas (LNG)*, 2006 edition.

NFPA 61, *Standard for the Prevention of Fires and Dust Explosions in Agricultural and Food Processing Facilities*, 2008 edition.

NFPA 68, *Standard on Explosion Protection by Deflagration Venting*, 2007 edition.

NFPA 69, *Standard on Explosion Prevention Systems*, 2008 edition.

NFPA 70, *National Electrical Code*®, 2008 edition.

NFPA 70B, *Recommended Practice for Electrical Equipment Maintenance*, 2006 edition.

NFPA 77, *Recommended Practice on Static Electricity*, 2007 edition.

Copyright National Fire Protection Association
Provided by IHS under license with NFPA
No reproduction or networking permitted without license from IHS
Not for Resale

NFPA 82, *Standard on Incinerators and Waste and Linen Handling Systems and Equipment*, 2004 edition.

NFPA 85, *Boiler and Combustion Systems Hazards Code*, 2007 edition.

NFPA 91, *Standard for Exhaust Systems for Air Conveying of Vapors, Gases, Mists, and Noncombustible Particulate Solids*, 2004 edition.

NFPA 255, *Standard Method of Test of Surface Burning Characteristics of Building Materials*, 2006 edition.

NFPA 329, *Recommended Practice for Handling Releases of Flammable and Combustible Liquids and Gases*, 2005 edition.

NFPA 497, *Recommended Practice for the Classification of Flammable Liquids, Gases, or Vapors and of Hazardous (Classified) Locations for Electrical Installations in Chemical Process Areas*, 2004 edition.

NFPA 499, *Recommended Practice for the Classification of Combustible Dusts and of Hazardous (Classified) Locations for Electrical Installations in Chemical Process Areas*, 2004 edition.

NFPA 600, *Standard on Industrial Fire Brigades*, 2005 edition.

Fire Protection Guide to Hazardous Materials, 2002 edition.

F.1.2 Other Publications.

F.1.2.1 ASTM Publications. ASTM International, 100 Barr Harbor Drive, P.O. Box C700, West Conshohocken, PA 19428-2959.

ASTM E 136, *Standard Test Method for Behavior of Materials in a Vertical Tube Furnace at 750°C,* 2004.

ASTM E 814, *Standard Test Method for Fire Tests of Through-Penetration Fire Stops*, 1997 (Rev. B-94).

F.1.2.2 CI Publications. The Chlorine Institute, 342 Madison Avenue, New York, NY 10017.

Properties of Chlorine, edition No. 2, 1986.

F.1.2.3 UL Publications. Underwriters Laboratories Inc., 333 Pfingsten Road, Northbrook, IL 60062-2096.

Hazardous Location Equipment Directory, 1989.

F.1.2.4 U.S. Government Publications. U.S. Government Printing Office, Washington, DC 20402.

Title 40, Code of Federal Regulations, Part 761.30.

OSHA, Title 29, Code of Federal Regulations, Part 1910.156.

F.1.2.5 Other Publications.

Recommended Practices RP01 series, National Association of Corrosion Engineers, P.O. Box 218340, Houston, TX 77218.

F.2 Informational References. The following documents or portions thereof are listed here as informational resources only. They are not a part of the requirements of this document.

Great Lakes Upper Mississippi Board of State Public Health and Environmental Managers, *Recommended Standards for Wastewater Facilities (10 State Standard),* Health Education Services, Albany, NY, 1990.

Kavassik, I. J., W. C. Krutzsch, W. H. Fraser, and J. Messina, *Pump Handbook,* McGraw-Hill, Inc., New York, 1986.

Metcalf and Eddy, Inc., *Wastewater Engineering: Collection and Pumping of Wastewater,* McGraw-Hill, Inc., New York, 1981.

Metcalf and Eddy, Inc., *Wastewater Engineering: Treatment, Disposal and Reuse* (3rd ed.), McGraw-Hill, Inc., New York, 1985.

Sanks, R. L., G. Tchobanoglous, D. Newton, B. E. Bosserman, and G. M. Jones, *Pumping Station Design,* Butterworth Publishers, Stoneham, MA, 1989.

Water Pollution Control Federation, *Wastewater Treatment Plant Design,* Manual of Practice #8, Alexandria, VA, 1990.

Water Pollution Control Federation, *Wastewater Treatment Plant Operations*, Manual of Practice #11, Alexandria, VA 1990.

F.3 References for Extracts in Informational Sections. (Reserved).

Copyright National Fire Protection Association
Provided by IHS under license with NFPA
No reproduction or networking permitted without license from IHS
Not for Resale

Index

Copyright © 2007 National Fire Protection Association. All Rights Reserved.

The copyright in this index is separate and distinct from the copyright in the document that it indexes. The licensing provisions set forth for the document are not applicable to this index. This index may not be reproduced in whole or in part by any means without the express written permission of NFPA.

-A-

Abbreviations, list of ..... Annex E
Abovegrade areas
Valve vaults ..... Table 4.2(30), Fig. A.4.2(d), Fig. A.4.2(f)
Ventilation rates ..... Table 9.1.1.4(3)
Wastewater pumping stations ..... Table 4.2(18), Table 4.2(19)
Access, fire fighting ..... 10.8(4), 10.9.2
Activated carbon ..... Table D.1.1, D.5.4
Definition 3.3.1
Activated sludge (definition) 3.3.55.1
Adjacent
Definition 3.3.2
Ventilation systems serving adjacent areas 9.2.5
Administrative controls ..... Chap. 10
Advanced (tertiary) wastewater treatment ..... B.5; *see also* Tertiary sedimentation tanks
Definition 3.3.64.4.1
Aeration basins ..... Table 5.2(7) to (9)
Aeration tanks, oxygen ..... Table 5.2(13)
Aerobic fixed-film systems ..... Table 5.2(10)
Aerobic suspended growth systems ..... Table 5.2(7) to (9)
Air supply systems ..... *see* Ventilation
Alarm systems
Fire ..... 7.3, 10.8(1)
Ventilation system failure 7.5, 9.2.10.3, A.7.5.3
Alcohol ..... Table D.1.1
Ammonia ..... Table D.2
Ammonia stripping towers ..... Table 5.2(18)
Anaerobic digesters ..... Table 6.2(a)(15), 8.3.3.5.1, Fig. A.6.2(a), D.2.4.3
Control buildings ..... Table 6.2(a)(16), Figs. A.6.2(b) to (e)
Gas storage ..... Table 6.2(a)(18)
Anaerobic digestion A.3.3.5, B.7.2, D.2.6
Definition 3.3.3
Anaerobic fixed-film systems ..... Table 5.2(11), D.2.4.14
Anaerobic towers ..... Table 5.2(11)
Anaerobic waste treatment ..... 8.3.3.5.1, D.2.4.2; *see also* Anaerobic digesters
Definition 3.3.64.1
Ancillary structure (definition) 3.3.60.1
Application of standard 1.3, A.1.3.1
Approved (definition) 3.2.1, A.3.2.1
Asphyxiating atmospheres, and construction materials 8.1.3.1
Associations, list of ..... Annex E
Authority having jurisdiction (definition) 3.2.2, A.3.2.2

-B-

Backwash water holding tanks ..... Table 5.2(23)
Basins
Aeration ..... Table 5.2(7) to (9)
Catch ..... Table 4.2(24), 8.3.1, A.8.3.1
Holding ..... Table 4.2(34), Table 4.2(35), Figs. A.4.2(a) to (c)
Belowgrade spaces ..... *see also* Tunnels
Grit chambers or screening equipment in pits D.2.4.8
Vaults ..... Table 4.2(26), Table 4.2(28), Table 4.2(31), Table 4.2(32), Table 4.2(36), Table 4.2(37), Fig. A.4.2(e)
Ventilation rates ..... Table 9.1.1.4(2)
Wastewater pumping stations ..... Table 4.2(17)
Belt filters ..... Table 6.2(a)(12)
Definition 3.3.18.1
Biological hazards 1.3.2
Biological treatment ..... Table 5.2(10), Table 5.2(11), B.4.1
Bio-towers ..... Table 5.2(10), D.2.4.14
Branch sewers (definition) 3.3.54.1
Breakpoint chlorination tanks ..... Table 5.2(17)
Building drains (definition) 3.3.5
Building sewers ..... Table 4.2(7)
Definition 3.3.54.2
Buildings/structures
Anaerobic digester control ..... Table 6.2(a)(16)
Coarse and fine screenings–handling ..... Table 6.2(a)(1)
Construction materials ..... Table 4.2, Table 5.2, 8.3.3, A.8.3.3.3.4
Control structures ..... Table 4.2(27), Table 4.2(33)
Definition 3.3.4
Dewatering ..... Table 6.2(a)(12)
Diversion structures ..... Table 4.2(25), Table 4.2(29)
Effluent ..... Table 5.2(25)
Grit handling ..... Table 6.2(a)(2), D.2.4.8
Incinerator ..... Table 6.2(a)(13), 8.3.3.5.1
Scum-handling ..... Table 6.2(a)(3)

-C-

Cable tray fires A.10.9
Carbon, activated ..... *see* Activated carbon
Carbon columns or tanks ..... Table 5.2(21)
Catch basins ..... Table 4.2(24), 8.3.1, A.8.3.1
Cellular plastic materials 8.3.3.7.1
Centrifuges ..... Table 6.2(a)(12)
Definition 3.3.6
Chambers
Grit B.2, D.2.4.8, D.2.6
Definition 3.3.7.1
Junction ..... Table 4.2(22), 8.3.1, A.8.3.1
Screening ..... Table 9.1.1.4(1)
Definition 3.3.7.2
Chemical reactions D.3.4
Chemical storage and -handling facilities ..... 1.1.2(9), Annex D
Chlorine ..... Table D.1.1, Table D.2, D.5.3
Breakpoint chlorination tanks ..... Table 5.2(17)
Contact tanks ..... Table 5.2(17)
Oxidation units ..... Table 6.2(a)(19)
Coarse and fine screen facilities ..... Table 4.2(38), Table 5.2(1)
Coarse and fine screenings handling–buildings ..... Table 6.2(a)(1)
Coatings 8.1.2, D.2.9
Collection systems ..... Chap. 4
Fire and explosion prevention and protection ..... Chap. 7
Material selection for ..... Annex C
Collector sewers ..... 1.1.2(1)
Definition 3.3.54.3
Combined sewers ..... 1.1.2(4), Table 4.2(15)
Construction materials C.4.7, C.4.8
Definition 3.3.54.4
Combustible (definition) 3.3.8
Combustible dust ..... *see* Dust, combustible or explosive
Combustible gas detectors ..... 7.4, 9.3.3(3), 10.6.3, A.7.4.1, A.7.4.2, D.4
Definition 3.3.9
Combustible gases ..... *see* Flammable and combustible gases
Combustible liquids ..... *see* Flammable and combustible liquids
Combustible materials ..... 1.3.5, 8.3.3.1(1), 10.2.2, D.2.9
Compost
Definition 3.3.11
Processes A.10.9

Copyright National Fire Protection Association
Provided by IHS under license with NFPA
No reproduction or networking permitted without license from IHS
Not for Resale

In-vessel ..... Table 6.2(a)(23)
Piles ..... Table 6.2(a)(22)
Construction
Collection systems ..... 4.2, Table 4.2, A.4.2
Fire protection during 7.7.1
Liquid stream treatment process ..... 5.2, Table 5.2, A.5.2
Materials ..... Chap. 8
Applications 8.3, A.8.3.1, A.8.3.3.3.4
Collection systems ..... Table 4.2, C.2
Liquid stream treatment process ..... Table 5.2, Fig. A.5.2
Risk assessment C.3
Selection criteria ..... 1.3.5, 8.2, 10.11(5), A.10.11(5)
Solids treatment processes ..... 6.2, Table 6.2(a), Table 6.2(b), A.6.2
Solid treatment processes .... 6.2, Table 6.2(a), Table 6.2(b), A.6.2
Contact tanks
Chlorine ..... Table 5.2(17)
Ozone ..... Table 5.2(22)
Control structures ... Table 4.2(27), Table 4.2(33); *see also* Anaerobic digesters, Control buildings
Corrosion 8.1.4, D.2.9
Critical unit processes
Construction materials 8.3.3.2
Fire emergencies in ..... 10.8(6), 10.8(7)

-D-

Dampers, smoke and fire 8.3.3.6.2
Definitions ..... Chap. 3
Design ..... *see* Construction
Detection systems ..... *see also* Combustible gas detectors
Fire 7.3, 10.6, A.10.6.2
Flow detection devices, ventilation system 7.5.1
Smoke 8.3.3.6.2
Dewatering of sludge ..... *see* Sludge
Diesel fuel ..... Table D.1.1
Digester gas ..... *see also* Sludge gas
Definition 3.3.32.1
Gas-processing rooms ..... Table 6.2(a)(17)
Digesters, anaerobic ..... *see* Anaerobic digesters
Disinfection units ..... Table 5.2(24), B.6
Dissolved air flotation ..... Table 6.2(a)(8)
Definition 3.3.12
Diversion structures ..... Table 4.2(25), Table 4.2(29)
Domestic wastewater ..... Table 4.2(14), (15)
Definition 3.3.70.1
Drainage
Building drains (definition) 3.3.5
Fire protection liquids 7.7.3
Sludge ..... Table 6.2(a)(25), D.2.4.2
Drying beds ..... Table 6.2(a)(25), B.7.2
Definition 3.3.13
Dry wells
Below or partially belowgrade wastewater pumping station ..... Table 4.2(17)
Definition 3.3.71.1, A.3.3.71.1
Residential wastewater pumping stations ..... Table 4.2(12)
Sludge pumping stations ..... Table 6.2(a)(9)
Storm water pumping stations ..... Table 4.2(5)
Ventilation rates ..... Table 9.1.1.4(2)
Dust, combustible or explosive D.2.8
Definition 3.3.10
Handling of D.2.4.4

-E-

Effluent structures ..... Table 5.2(25)
Electrical arcs D.3.2
Employees, training of 10.11.1.1
Enclosed spaces
Aeration basins or aerobic suspended growth systems ..... Table 5.2(8), Table 5.2(9)
Definition 3.3.14
Ventilation of ..... Chap. 9
Equipment
Definition 3.3.15
Identified (definition) 3.3.35
Equipment enclosures ..... Figs. A.4.2(d) to (f)
Definition 3.3.16
Equivalency to standard 1.5
Essential unit processes 8.3.3.3
Evacuation ..... 10.8(3)
Exhaust air, recirculation of 9.3.3, A.9.3.3
Exhaust systems 8.3.3.6
Existing facilities 1.3.1.1, A.1.3.1
Explosion hazards ..... *see* Fire and explosion hazards
Explosion prevention 10.11
Explosionproof apparatus (definition) 3.3.17
Explosion protection ..... 1.2.1, Annex D
Explosive dust ..... *see* Dust, combustible or explosive
Extinguishers, portable fire 7.2.5
Extinguishing systems ..... 7.2.1.3, 7.2.2 to 7.2.4

-F-

Fans, supply and exhaust 9.2.3, 9.2.4
Filter presses ..... Table 6.2(a)(12)
Definition 3.3.19
Filters
Belt ..... Table 6.2(a)(12)
Definition 3.3.18.1
Pressure or gravity ..... Table 5.2(20)
Definition 3.3.18.2
Trickling ..... *see* Trickling filters
Vacuum ..... Table 6.2(a)(12)
Definition 3.3.18.4
Final pumping stations ..... Table 5.2(19)
Finely divided solids D.2.8
Finishes, interior 8.1.2
Fire and explosion hazards .... *see also* Dust, combustible or explosive
Collection systems ..... Table 4.2
Control of sources 10.11.1
Liquid stream treatment processes ..... Table 5.2
Solids treatment processes ..... Table 6.2(a), Table 6.2(b)
Fire barriers (definition) 3.3.20
Fire brigades 10.9, A.10.9
Fire dampers 8.3.3.6.2
Fire emergency plan 10.8
Fire loading (definition) 3.3.21
Fire prevention ..... Chap. 7, 10.11, A.10.11(1) to A.10.11.3.1
Definition 3.3.22
Management policy and direction 10.2, A.10.2.1
Program ..... 10.4, A.10.4(7)
Fire protection ..... 1.2.1, 7.2, 10.5 to 10.7, A.10.6.2, A.10.7
Chemical and fuel storage and handling facilities ..... Annex D
Collection systems ..... Table 4.2
Definition 3.3.23
Liquid stream treatment processes ..... Table 5.2
Management policy and direction 10.2, A.10.2.1
Solids treatment processes ..... Table 6.2(a), Table 6.2(b)
Fire pumps 7.2.4.4
Fire-rated penetration seal (definition) 3.3.24
Fire reports ..... 10.4(7), A.10.4(7)
Fire resistance rating (definition) 3.3.50.1
Fire risk evaluation 1.3.3, 10.3, A.10.3
Fire safety information ..... 10.4(1)
Firestops, through-penetration (definition) 3.3.63, A.3.3.63
Fixed film systems ..... Table 5.2(10), (11), B.4.1, D.2.4.14
Fixed roof anaerobic digesters ..... Table 6.2(a)(15), Fig. A.6.2(a)
Flame arresters/checks 10.6.3
Flame spread, low ..... *see* Low flame spread materials
Flammable and combustible gases .... 7.1.1(1), 10.4(4), Table D.1.1, D.2, Table D.2; *see also* Fuel gases; Sewer gas; Sludge gas
Generation and combustion processes 8.3.3.5

Copyright National Fire Protection Association
Provided by IHS under license with NFPA
No reproduction or networking permitted without license from IHS
Not for Resale

Ventilation rates ..... Table 9.1.1.4(2), (3)
Flammable and combustible liquids ..... 7.1.1(1), 10.4(4), D.2.7
Definition 3.3.39.1, 3.3.39.2, A.3.3.39.1, A.3.3.39.2
Flammable limits
Lower flammable limit (LFL) ..... 9.3.2(4), Table D.2
Definition 3.3.25.1
Upper flammable limit (UFL) ..... Table D.2
Definition 3.3.25.2
Flash dryers (definition) 3.3.26
Flash mixers
Definition 3.3.27
Tanks ..... Table 5.2(15)
Floating cover anaerobic digesters .... Table 6.2(a)(15), Fig. A.6.2(a)
Flocculation tanks ..... Table 5.2(15)
Flocculators (definition) 3.3.28
Flow detection devices 7.5.1
Flow equalization tanks ..... Table 5.2(3)
Fluidized bed reactors (definition) 3.3.29, A.3.3.29
Foamed plastic materials 8.3.3.7.1
Foam extinguishing systems ..... 10.5.1(4)
Force mains (pressure mains) ..... Table 4.2(6)
Definition 3.3.30
Fuel gases D.2.1, D.2.6
Definition 3.3.32.2, A.3.3.32.2
Fuel storage and handling facilities ..... Annex D

-G-

Galleries D.2.4.13
Definition 3.3.31, A.3.3.31
Ventilation rates ..... Table 9.1.1.4(2), (3)
Gas detectors .....*see* Combustible gas detectors
Gases ...*see also* Flammable and combustible gases; Fuel gases; Sewer gas; Sludge gas
Hazardous D.2.6
Toxic 9.1.1.2, D.4
Gas-handling equipment ..... Table 5.2(12)
Definition 3.3.15.1, A.3.3.15.1
Gasoline ..... Table D.1.1, Table D.2, D.2.7
Gravity belt thickeners ..... Table 6.2(a)(12)
Gravity (pressure) filters ..... Table 5.2(20)
Definition 3.3.18.2
Grit chambers B.2, D.2.4.8
Definition 3.3.7.1
Grit-handling buildings ..... Table 6.2(a)(2)
Grit removal tanks ..... Table 5.2(4)

-H-

Hazardous (classified) locations
Collection systems ..... Table 4.2
Combustible gas detectors in 7.4.5
Definition 3.3.33
Liquid stream treatment processes ..... Table 5.2
Solids treatment processes ..... Table 6.2(a), Table 6.2(b)
Ventilation systems ..... 9.1.2, 9.2.3, 9.2.6 to 9.2.8
Hazardous gases D.2.6
Hazardous waste (definition) 3.3.69.1
Hazards
Biological .....*see* Biological hazards
Control of 10.11.1
Fire and explosion .....*see* Fire and explosion hazards
Sources of D.2
Toxic .....*see* Toxic hazards
Heat treatment ..... Table 6.2(a)(14)
Definition 3.3.64.2
High-pressure oxidation units ..... Table 6.2(a)(14)
Holding basins .... Table 4.2(34), Table 4.2(35), Figs. A.4.2(a) to (c)
Holding tanks
Backwash water ..... Table 5.2(23)
Sludge ..... Table 6.2(a)(10)
Holding wells, sludge-blending ..... Table 6.2(a)(11)
Hose systems ..... 7.2.4.3, 10.5.1(2)
Hot surfaces D.3.1
Hot work ..... 10.11.3, 10.11(4), A.10.11.3.1
Housekeeping ..... 10.4(3), 10.11.1.1
Hydrants 7.2.4.2
Hydrocarbon liquids D.2.7
Hydrogen chloride ..... Table D.2
Hydrogen sulfide (H_2S) ..... Table D.2
Definition 3.3.34

-I-

Identified (as applied to equipment) (definition) 3.3.35
Ignition, conditions for D.3
Ignition sources D.2.4.5, D.3
Control of ..... 10.4(5), 10.11.2, A.10.11.2.1
Imhoff tanks D.2.4.9
Definition 3.3.62.1
Impairments 10.7, A.10.7
Incineration
Definition 3.3.36
Of sludge cake B.7.3
Incinerators and incinerator buildings ..... Table 6.2(a)(13), D.2.4.5
Scum ..... Table 6.2(a)(7)
Sludge 8.3.3.5.1
Individual residential pumping units ..... Table 4.2(9)
Individual sewers, residential ..... Table 4.2(8)
Industrial sewers ..... Table 4.2(2)
Definition 3.3.54.5
Industrial waste B.1.1
Definition 3.3.69.2
Inspection, maintenance, and testing
Definition 3.3.37, 3.3.40
Fire protection systems 10.5.3, 10.6.2, 10.6.3, 10.7.3, A.10.6.2
Preventive ..... 10.4(2), 10.11.1.1
Training for 10.11.1.1
Installation
Non-waterbased fire protection systems 10.6.1
Ventilation systems 9.2
Water-based fire protection systems 10.5.2
Interceptor sewers ..... 1.1.2(3)
Definition 3.3.54.6
Interior coatings and finishes 8.1.2
Intermediate pumping stations ..... Table 5.2(19)
Intermediate sedimentation tanks ..... Table 5.2(14)
Intrinsically safe (definition) 3.3.38
Inverted siphons ..... Table 4.2(23)
In-vessel composting ..... Table 6.2(a)(23)

-J-

Junction chambers ..... Table 4.2(22), 8.3.1, A.8.3.1

-K-

Kerosene D.2.7

-L-

Labeled (definition) 3.2.3
Laboratories, fire protection for 7.6
Lagoons ..... Table 5.2(7)
Lightning protection 7.7.2
Limited-combustible materials 1.3.5, 8.3.3.2.4, 8.3.3.3.1, 8.3.3.3.4, 8.3.3.4.4, 8.3.3.6.1, A.8.3.3.3.4, D.2.9
Definition 3.3.42.1
Liquid stream treatment process ..... Chap. 5
Listed (definition) 3.2.4, A.3.2.4
Local alarms ..... 7.5.2, Table 7.5.3
Lower flammable limit (LFL) .....*see* Flammable limits
Low flame spread materials 1.3.5, 8.3.3.2.4, 8.3.3.3.1, 8.3.3.3.4, 8.3.3.4.4, 8.3.3.6.1, A.8.3.3.3.4, D.2.9
Low flame spread rating (definition) 3.3.50.2, A.3.3.50.2

--`,,```,,,,````-`-`,,`,,`,`,,`---
Copyright National Fire Protection Association
Provided by IHS under license with NFPA
No reproduction or networking permitted without license from IHS
Not for Resale

Low-pressure oxidation units ..... Table 6.2(a)(14)
LP-Gas ..... Table D.1.1, D.2.6

-M-

Maintenance .....*see* Inspection, maintenance, and testing
Maintenance holes ..... Table 4.2(21)
Construction materials 8.3.1, A.8.3.1
Definition 3.3.41
Management policy and direction 10.2, A.10.2.1
Materials, construction .....*see* Construction, Materials
Measurement, units of 1.6
Metering vaults, below grade ..... Table 4.2(28), Table 4.2(36), Table 4.2(37), Fig. A.4.2(e)
Methane (CH_4) ..... Table 6.2(a)(8) to (11), B.7.1
Definition 3.3.43
Mixers, flash
Definition 3.3.27
Tanks ..... Table 5.2(15)
Motor oils ..... Table D.1.1

-N-

***National Electrical Code*® criteria** ..... 1.8, A.1.8; *see also* Hazardous (classified) locations
Natural gas ..... Table D.2, D.2.6
Natural gas piping ..... Table 6.2(a)(20), Fig. A.6.2(f), Fig. A.6.2(g)
Nitrification/denitrification tanks ..... Table 5.2(16)
Definition 3.3.62.2
Nitrogen ..... Table D.2
Noncombustible materials 8.3.3.2.1, 8.3.3.2.4, 8.3.3.3.1, 8.3.3.3.4, 8.3.3.4.4, 8.3.3.5.1, 8.3.3.6.1, A.8.3.3.3.4
Definition 3.3.42.2
Nonenclosed (definition) 3.3.44
Nonstructural assemblies 8.3.3.2.4, 8.3.3.3.4, 8.3.3.4.4, A.8.3.3.3.4

-O-

Odor control system areas
Collection systems ..... Table 4.2(20), Fig. A.4.2(g)
Liquid stream treatment process ..... Table 5.2(26)
Solid treatment processes ..... Table 6.2(a)(24)
Oils D.2.7
On-site treatment systems ..... Table 5.2(22)
Definition 3.3.61.1
Open flames D.3.1
Outfall sewers ..... Table 4.2(13)
Definition 3.3.54.7
Oxidation ditches ..... Table 5.2(7)
Oxidation units
Chlorine ..... Table 6.2(a)(19)
Low- or high-pressure ..... Table 6.2(a)(14)
Oxygen ..... Table D.1.1, Table D.2, D.5.1
Oxygen aeration tanks ..... Table 5.2(13)
Oxygen-enriched atmospheres D.2.4.12
Definition 3.3.45
Ozonation B.6
Definition 3.3.46
Ozone contact tanks ..... Table 5.2(22)
Ozone generation ..... Table 5.2(22), Table D.1.1, Table D.2, D.5.2

-P-

Penetration seal, fire-rated (definition) 3.3.24
Physical-chemical treatment B.4.2
Physically separated
Definition 3.3.47, A.3.3.47
Enclosed spaces 7.2.1.2
Piping
Combined sewers C.4.8
Construction materials 8.3.3.2.4, 8.3.3.3.4, 8.3.3.4.4, A.8.3.3.3.4
Gas ..... Table 6.2(a)(21)
Natural ..... Table 6.2(a)(20), Fig. A.6.2(f), Fig. A.6.2(g)
Sludge ..... Table 6.2(a)(20), Fig. A.6.2(b), Fig. A.6.2(c), Fig. A.6.2(f), Fig. A.6.2(g)
Sanitary sewers C.4.6
Storm sewers C.4.3
Tunnels for .....*see* Tunnels
Pits, sludge ..... Table 6.2(a)(10)
Plant emergency organizations (PEO) 10.9.3, 10.11.1.1
Plastic materials 8.3.3.7.1, D.2.4.14, D.2.9
Polychlorinated biphenyls 10.10, A.10.10
Ponds ..... Table 5.2(7)
Positive pressurization 9.1.2
Power sources, ventilation systems 9.2.10
Pre-aeration tanks ..... Table 5.2(5)
Preliminary treatment B.2
Pressure filters ..... Table 5.2(20)
Definition 3.3.18.2
Pressure sewers
Collection systems ..... Table 4.2(6)
Definition 3.3.54.8
Pressurization, positive 9.1.2
Primary sedimentation tanks ..... Table 5.2(6), Fig. A.5.2, D.2.4.10
Primary wastewater treatment B.3
Definition 3.3.64.4.2
Private sewers (definition) 3.3.54.9
Pumping of drainage from digested sludge dewatering processes ..... Table 6.2(a)(25)
Pumping stations ..... 1.1.2(6), D.2.4.7
Definition 3.3.48, A.3.3.48
Intermediate or final ..... Table 5.2(19)
Liquid stream treatment process ..... Table 5.2(2)
Residential wastewater .....*see* Residential wastewater pumping stations
Sludge ..... Table 6.2(a)(9)
Storm water ..... Table 4.2(4), Table 4.2(5)
Wastewater .....*see* Wastewater pumping stations
Pumping units, individual residential ..... Table 4.2(9)
Pumps, fire 7.2.4.4
Purpose of standard 1.2
Pyrolysis D.3.2
Definition 3.3.49

-R-

Radio communications equipment 10.6.3
Reactor, fluidized bed (definition) 3.3.29, A.3.3.29
Recirculation, of exhaust air 9.3.3, A.9.3.3
References ..... Chap. 2, Annex F
Relief sewers (definition) 3.3.54.10
Remote alarms ..... 7.5.2, Table 7.5.3
Residential belowgrade vaults ..... Table 4.2(26), Table 4.2(28)
Residential control structures ..... Table 4.2(27)
Residential diversion structures ..... Table 4.2(25)
Residential sewers ..... Table 4.2(8), Table 4.2(10)
Definition 3.3.54.11
Residential wastewater ..... Table 4.2(10) to (12), Table 4.2(25) to (28)
Definition 3.3.70.2
Residential wastewater pumping stations ..... Table 4.2(11), (12)
Retroactivity of standard 1.4
Risk assessment C.3
Roof coverings 8.3.3.7.2
Roof decks, metal 8.3.3.7.3, 8.3.3.7.4
Rotating biological contactors (RBC) A.8.3.3.3.4, D.2.4.14
Definition 3.3.51

-S-

Sanitary sewers ..... Table 4.2(14), Fig. A.4.2(c)
Construction materials ..... C.4.4 to C.4.6
Definition 3.3.54.12
Scope of standard 1.1, A.1.1.1
Screening chambers ..... Table 9.1.1.4(1)
Definition 3.3.7.2

--`,,```,,,,````-`-`,,`,,`,`,,`---

Copyright National Fire Protection Association
Provided by IHS under license with NFPA
No reproduction or networking permitted without license from IHS
Not for Resale

Screening equipment D.2.4.8
Scum or skimmings D.2.4.1
Definition 3.3.52
Scum-handling building or area ..... Table 6.2(a)(3)
Scum incinerators ..... Table 6.2(a)(7), D.2.4.5
Scum pits ..... Table 6.2(a)(4), D.2.4.1
Scum-pumping areas ..... Table 6.2(a)(5), Table 6.2(a)(6)
Secondary sedimentation tanks ..... Table 5.2(14), D.2.4.11
Secondary wastewater treatment B.4
Definition 3.3.64.4.3
Sedimentation (definition) 3.3.53, A.3.3.53
Sedimentation tanks D.2.4.1
Intermediate ..... Table 5.2(14)
Primary ..... Table 5.2(6), Fig. A.5.2, D.2.4.10
Secondary ..... Table 5.2(14), D.2.4.11
Tertiary ..... Table 5.2(14), D.2.4.11
Separate nonprocess-related structures (definition) 3.3.60.2
Sequencing batch reactors ..... Table 5.2(7)
Sewer gas ..... Table D.2, D.2.3, D.2.6
Definition 3.3.32.3, A.3.3.32.3
Sewers ..... Table 4.2
Combined ..... *see* Combined sewers
Construction materials 8.3.1, A.8.3.1
Definitions 3.3.54
Sanitary ..... *see* Sanitary sewers
Storm ..... *see* Storm sewers
Shall (definition) 3.2.5
Should (definition) 3.2.6
SI units 1.6
Sludge
Activated (definition) 3.3.55.1
Cakes ..... *see* Sludge cakes
Definition 3.3.55
Dewatering B.7.2, D.2.4.6
Buildings ..... Table 6.2(a)(12)
Definition 3.3.57
Pumping of drainage from digested sludge dewatering processes ..... Table 6.2(a)(25)
Stabilization B.7.1
Thickener/thickening ..... Table 6.2(a)(8)
Definition 3.3.59
Treatment B.7, D.2.4.2
Definition 3.3.64.3, A.3.3.64.3
Facility construction materials 8.3.3.4.1
Sludge-blending tanks and holding wells ..... Table 6.2(a)(11)
Sludge cakes
Conveyance equipment D.2.4.6
Definition 3.3.56
Disposal B.7.3
Incinerators for D.2.4.5
Sludge-drying systems ..... Table 6.2(b)
Definition 3.3.61.2
Sludge gas ..... Table D.2, D.2.2, D.2.6; *see also* Anaerobic digesters
Definition 3.3.32.4, A.3.3.32.4
Piping ..... Table 6.2(a)(20), Fig. A.6.2(b), Fig. A.6.2(c), Fig. A.6.2(f), Fig. A.6.2(g)
Processing rooms ..... Figs. A.6.2(d), Fig. A.6.2(e)
Storage ..... Table 6.2(a)(18)
Vent (definition) 3.3.58
Sludge pumping stations, dry well ..... Table 6.2(a)(9)
Sludge storage wet wells, pits, and holding tanks ... Table 6.2(a)(10)
Smoke dampers 8.3.3.6.2
Smoke detectors 8.3.3.6.2
Solids, finely divided D.2.8
Solid treatment processes ..... Chap. 6
Solvent extraction D.2.4.4
Sparks D.3.3
Sprinkler systems ..... 7.2.2, 8.3.3.7.4, 10.5.1(1), 10.5.1(4)
Standard (definition) 3.2.7
Standpipe and hose systems ..... 7.2.4.3, 10.5.1(2)
Storage
Anaerobic digesters, gas storage ..... Table 6.2(a)(18)
Chemical and fuel ..... Annex D
Combustible materials 10.2.2
Dried sludge ..... Table 6.2(b)
Sludge storage wet wells, pits, and holding tanks ..... Table 6.2(a)(10)
Storm sewers ..... 1.1.2(5), Table 4.2(3)
Construction materials ..... C.4.1 to C.4.3
Definition 3.3.54.13
Storm water pumping stations ..... Table 4.2(4), Table 4.2(5), Fig. A.4.2(a), Fig. A.4.2(e)
Structures (definition) ..... 3.3.60; *see also* Buildings/structures
Sulfur dioxide ..... Table D.2
Sumps D.2.4.2

-T-

Tanks
Drainage D.2.4.2
Holding ..... Table 5.2(23), Table 6.2(a)(10)
Imhoff D.2.4.9
Definition 3.3.62.1
Nitrification/denitrification ..... Table 5.2(16)
Definition 3.3.62.2
Sedimentation ..... *see* Sedimentation tanks
Sludge-blending ..... Table 6.2(a)(11)
Tertiary sedimentation tanks ..... Table 5.2(14), D.2.4.11
Tertiary treatment B.5
Testing ..... *see* Inspection, maintenance, and testing
Through-penetration firestops (definition) 3.3.63, A.3.3.63
Towers
Ammonia stripping ..... Table 5.2(18)
Anaerobic ..... Table 5.2(11)
Bio-towers ..... Table 5.2(10), D.2.4.14
Toxic hazards 1.3.2
Construction materials and 8.1.3.1
Control of sources 10.11.1.1
Gases 9.1.1.2, D.4
Training, employee 10.11.1.1
Transport systems ..... *see* Collection systems
Trickling filters ..... Table 5.2(10), D.2.4.14
Definition 3.3.18.3
Trunk sewers ..... 1.1.2(2)
Definition 3.3.54.14
Tunnels ..... Table 6.2(a)(21); *see also* Galleries
Natural gas or sludge gas piping ... Table 6.2(a)(20), Fig. A.6.2(f), Fig. A.6.2(g)
Ventilation rates ..... Table 9.1.1.4(2), Fig. A.6.2(f), Fig. A.6.2(g)

-U-

Ultraviolet disinfection unit ..... Table 5.2(24)
Unit processes
Construction materials for 8.2.4, 8.3.3.4, D.2.4
Critical ..... 8.3.3.2, 10.8(6), 10.8(7)
Definition 3.3.66
Essential 8.3.3.3
Units of measurement 1.6
Upper flammable limit (UFL) ..... Table D.2
Definition 3.3.25.2
Utilization equipment (definition) 3.3.15.2

-V-

Vacuum filters ..... Table 6.2(a)(12)
Definition 3.3.18.4
Valve vaults
Abovegrade ..... Table 4.2(30), Fig. A.4.2(d), Fig. A.4.2(f)
Belowgrade ..... Table 4.2(26), Table 4.2(31), Table 4.2(32), Fig. A.4.2(e)
Vaults ..... *see also* Valve vaults
Definition 3.3.67
Metering, below grade ..... Table 4.2(28), Table 4.2(36), Table 4.2(37), Fig. A.4.2(e)

Copyright National Fire Protection Association
Provided by IHS under license with NFPA
No reproduction or networking permitted without license from IHS
Not for Resale

Ventilation ..... Chap. 9, D.4
Collection systems ..... Table 4.2
Construction materials 8.3.3.2.4, 8.3.3.3.4, 8.3.3.4.4, 8.3.3.6, A.8.3.3.3.4
For fire and explosion control ..... 10.11(1), A.10.11(1)
Liquid stream treatment processes ..... Table 5.2
Monitoring and signaling systems 7.5, A.7.5.3
Solids treatment processes ..... Table 6.2(a), Table 6.2(b), Figs. A.6.2(b) to (g)
Ventilation rates ..... 1.3.4, Table 9.1.1.4, 9.3, A.9.3.3
Definition 3.3.68
Vents, sludge gas (definition) 3.3.58
Volatile liquids (definition) 3.3.39.3

-W-

Waste backwash water holding tanks ..... Table 5.2(23)
Waste treatment, anaerobic
Definition 3.3.6
Sludge treatment processes 8.3.3.5.1, D.2.4.2
Wastewater B.1.1
Definition 3.3.70, B.1.1
Domestic ..... Table 4.2(14), (15)
Definition 3.3.70.1
Residential ..... Table 4.2(10) to (12), Table 4.2(25) to (28)
Definition 3.3.70.2
Wastewater holding basins ..... Table 4.2(34), Table 4.2(35), Figs. A.4.2(a) to (c)
Wastewater pumping stations ..... D.2.4.7; *see also* Residential wastewater pumping stations
Abovegrade ..... Table 4.2(18), Table 4.2(19)
Below or partially belowgrade ..... Table 4.2(17)
Construction materials ..... Table 4.2, 8.3.2
Dry wells ..... Table 4.2(12), (17)
Ventilation of ..... Chap. 9
Wet wells ..... Table 4.2(11), Table 4.2(16), Fig. A.4.2(c)
Wastewater treatment
Advanced .....*see* Advanced (tertiary) wastewater treatment
Elements of B.1.2
Primary B.3
Definition 3.3.64.4.2
Secondary B.4
Definition 3.3.64.4.3
Wastewater treatment processes ..... Annex B
Fire and explosion prevention and protection ..... Chap. 7
Gases commonly found in ..... Table D.2
Schematic flow and process diagram ..... Fig. B.1.2
Water-based fire protection systems 10.5, 10.7, A.10.7
Water spray fixed systems ..... 10.5.1(3)
Water supplies, fire protection ..... 7.2.4, 10.5.1(5)
Wells
Dry .....*see* Dry wells
Holding, sludge-blending ..... Table 6.2(a)(11)
Wet .....*see* Wet wells
Wet wells
Definition 3.3.71.2, A.3.3.71.2
Residential sewer ..... Fig. A.4.2(b)
Residential wastewater pumping stations ..... Table 4.2(11)
Separate or combined sanitary sewer ..... Fig. A.4.2(c)
Sludge storage ..... Table 6.2(a)(10)
Storm sewer ..... Fig. A.4.2(a)
Storm water pumping stations ..... Table 4.2(4)
Ventilation rates ..... Table 9.1.1.4(1)
Wastewater pumping stations ..... Table 4.2(11), Table 4.2(16)

--`,,```,,,,````-`-`,,`,,`,`,,`---

Copyright National Fire Protection Association
Provided by IHS under license with NFPA
No reproduction or networking permitted without license from IHS
Not for Resale

Formal Interpretation

NFPA 820

Fire Protection in Wastewater Treatment and Collection Facilities

2008 Edition

Reference: Tables 4.2, 5.2, and 6.2
F.I. 92-1

Background: In Tables 4.2, 5.2, and 6.2(a), footnote code A is defined as "Ventilated at less than 12 air changes per hour."

Question 1: Does this definition include mechanically ventilated at any rate less than 12 air changes per hour (including 1 air change per hour or less)?

Answer: Yes.

Question 2: Does this definition include ventilated with a static vent (without mechanical ventilation)?

Answer: Yes.

Issue Edition: 1992
Reference: Tables 2, 3, 4, and 5
Issue Date: May 11, 1992
Effective Date: June 1, 1992

Copyright © 2007 All Rights Reserved
NATIONAL FIRE PROTECTION ASSOCIATION

--`,,```,,,,````-`-`,,`,,`,`,,`---

Copyright National Fire Protection Association
Provided by IHS under license with NFPA
No reproduction or networking permitted without license from IHS
Not for Resale

Sequence of Events Leading to Issuance of an NFPA Committee Document

Step 1: Call for Proposals

- Proposed new Document or new edition of an existing Document is entered into one of two yearly revision cycles, and a Call for Proposals is published.

Step 2: Report on Proposals (ROP)

- Committee meets to act on Proposals, to develop its own Proposals, and to prepare its Report.
- Committee votes by written ballot on Proposals. If two-thirds approve, Report goes forward. Lacking two-thirds approval, Report returns to Committee.
- Report on Proposals (ROP) is published for public review and comment.

Step 3: Report on Comments (ROC)

- Committee meets to act on Public Comments to develop its own Comments, and to prepare its report.
- Committee votes by written ballot on Comments. If two-thirds approve, Report goes forward. Lacking two-thirds approval, Report returns to Committee.
- Report on Comments (ROC) is published for public review.

Step 4: Technical Report Session

- "*Notices of intent to make a motion"* are filed, are reviewed, and valid motions are certified for presentation at the Technical Report Session. ("Consent Documents" that have no certified motions bypass the Technical Report Session and proceed to the Standards Council for issuance.)
- NFPA membership meets each June at the Annual Meeting Technical Report Session and acts on Technical Committee Reports (ROP and ROC) for Documents with "certified amending motions."
- Committee(s) vote on any amendments to Report approved at NFPA Annual Membership Meeting.

Step 5: Standards Council Issuance

- Notification of intent to file an appeal to the Standards Council on Association action must be filed within 20 days of the NFPA Annual Membership Meeting.
- Standards Council decides, based on all evidence, whether or not to issue Document or to take other action, including hearing any appeals.

Committee Membership Classifications

The following classifications apply to Technical Committee members and represent their principal interest in the activity of the committee.

M *Manufacturer:* A representative of a maker or marketer of a product, assembly, or system, or portion thereof, that is affected by the standard.

U *User:* A representative of an entity that is subject to the provisions of the standard or that voluntarily uses the standard.

I/M *Installer/Maintainer:* A representative of an entity that is in the business of installing or maintaining a product, assembly, or system affected by the standard.

L *Labor:* A labor representative or employee concerned with safety in the workplace.

R/T *Applied Research/Testing Laboratory:* A representative of an independent testing laboratory or independent applied research organization that promulgates and/or enforces standards.

E *Enforcing Authority:* A representative of an agency or an organization that promulgates and/or enforces standards.

I *Insurance:* A representative of an insurance company, broker, agent, bureau, or inspection agency.

C *Consumer:* A person who is, or represents, the ultimate purchaser of a product, system, or service affected by the standard, but who is not included in the *User* classification.

SE *Special Expert:* A person not representing any of the previous classifications, but who has a special expertise in the scope of the standard or portion thereof.

NOTES;
1. "Standard" connotes code, standard, recommended practice, or guide.
2. A representative includes an employee.
3. While these classifications will be used by the Standards Council to achieve a balance for Technical Committees, the Standards Council may determine that new classifications of members or unique interests need representation in order to foster the best possible committee deliberations on any project. In this connection, the Standards Council may make appointments as it deems appropriate in the public interest, such as the classification of "Utilities" in the National Electrical Code Committee.
4. Representatives of subsidiaries of any group are generally considered to have the same classification as the parent organization.

Copyright National Fire Protection Association
Provided by IHS under license with NFPA
No reproduction or networking permitted without license from IHS
Not for Resale

NFPA Technical Committee Document Proposal Form

NOTE: All Proposals must be received by 5:00 pm EST/EDST on the published Proposal Closing Date.

For further information on the standards-making process, please contact the Codes and Standards Administration at 617-984-7249 or visit www.nfpa.org/codes.

For technical assistance, please call NFPA at 1-888-344-3555.

FOR OFFICE USE ONLY

Log #: _____

Date Rec'd: _____

Please indicate in which format you wish to receive your ROP/ROC ☐ **electronic** ☐ **paper** ☒ **download**
(Note: If choosing the download option, you must view the ROP/ROC from our website; no copy will be sent to you.)

Date April 1, 200X **Name** John J. Doe **Tel. No.** 716-555-1234

Company Air Canada Pilot's Association

Street Address 123 Summer Street Lane **City** Lewiston **State** NY **Zip** 14092

Please indicate organization represented (if any) _____

1. (a) NFPA Document Title National Fuel Gas Code **NFPA No. & Year** 54, 200X Edition

(b) Section/Paragraph 3.3

2. Proposal Recommends (check one): ☐ new text ☒ revised text ☐ deleted text

3. Proposal (include proposed new or revised wording, or identification of wording to be deleted): [Note: Proposed text should be in legislative format; i.e., use underscore to denote wording to be inserted (inserted wording) and strike-through to denote wording to be deleted (~~deleted wording~~).]

Revise definition of effective ground-fault current path to read:

3.3.78 Effective Ground-Fault Current Path. An intentionally constructed, permanent, low impedance electrically conductive path designed and intended to carry ~~underground~~ electric fault current ~~conditions~~ from the point of a ground fault on a wiring system to the electrical supply source.

4. Statement of Problem and Substantiation for Proposal: (Note: State the problem that would be resolved by your recommendation; give the specific reason for your Proposal, including copies of tests, research papers, fire experience, etc. If more than 200 words, it may be abstracted for publication.)

Change uses proper electrical terms.

5. Copyright Assignment

(a) ☐ **I am the author of the text or other material (such as illustrations, graphs) proposed in this Proposal.**

(b) ☒ **Some or all of the text or other material proposed in this Proposal was not authored by me. Its source is as follows** (please identify which material and provide complete information on its source)**:**

ABC Co.

I agree that any material that I author, either individually or with others, in connection with work performed by an NFPA Technical Committee shall be considered to be works made for hire for the NFPA. To the extent that I retain any rights in copyright as to such material, or as to any other material authored by me that I submit for the use of an NFPA Technical Committee in the drafting of an NFPA code, standard, or other NFPA document, I hereby grant and assign all and full rights in copyright to the NFPA. I further agree and acknowledge that I acquire no rights in any publication of the NFPA and that copyright and all rights in materials produced by NFPA Technical Committees are owned by the NFPA and that the NFPA may register copyright in its own name.

Signature (Required) _____

PLEASE USE SEPARATE FORM FOR EACH PROPOSAL • NFPA Fax: (617) 770-3500

Mail to: Secretary, Standards Council, National Fire Protection Association, 1 Batterymarch Park, Quincy, MA 02169-7471

6/8/2007

SAMPLE

--`,,```,,,,````-`-`,,`,,`,`,,`---

Copyright National Fire Protection Association
Provided by IHS under license with NFPA
No reproduction or networking permitted without license from IHS

Not for Resale

NFPA Technical Committee Document Proposal Form

NOTE: All Proposals must be received by 5:00 pm EST/EDST on the published Proposal Closing Date.

For further information on the standards-making process, please contact the Codes and Standards Administration at 617-984-7249 or visit www.nfpa.org/codes.

For technical assistance, please call NFPA at 1-888-344-3555.

FOR OFFICE USE ONLY

Log #: _____

Date Rec'd: _____

Please indicate in which format you wish to receive your ROP/ROC ☐ electronic ☐ paper ☐ download
(Note: If choosing the download option, you must view the ROP/ROC from our website; no copy will be sent to you.)

Date _____ **Name** _____ **Tel. No.** _____

Company _____

Street Address _____ **City** _____ **State** _____ **Zip** _____

Please indicate organization represented (if any) _____

1. (a) NFPA Document Title _____ **NFPA No. & Year** _____

(b) Section/Paragraph _____

2. Proposal Recommends (check one): ☐ new text ☐ revised text ☐ deleted text

3. Proposal (include proposed new or revised wording, or identification of wording to be deleted): [Note: Proposed text should be in legislative format; i.e., use underscore to denote wording to be inserted (inserted wording) and strike-through to denote wording to be deleted (~~deleted wording~~).]

4. Statement of Problem and Substantiation for Proposal: (Note: State the problem that would be resolved by your recommendation; give the specific reason for your Proposal, including copies of tests, research papers, fire experience, etc. If more than 200 words, it may be abstracted for publication.)

5. Copyright Assignment

(a) ☐ I am the author of the text or other material (such as illustrations, graphs) proposed in this Proposal.

(b) ☐ Some or all of the text or other material proposed in this Proposal was not authored by me. Its source is as follows (please identify which material and provide complete information on its source)**:**

_____

I agree that any material that I author, either individually or with others, in connection with work performed by an NFPA Technical Committee shall be considered to be works made for hire for the NFPA. To the extent that I retain any rights in copyright as to such material, or as to any other material authored by me that I submit for the use of an NFPA Technical Committee in the drafting of an NFPA code, standard, or other NFPA document, I hereby grant and assign all and full rights in copyright to the NFPA. I further agree and acknowledge that I acquire no rights in any publication of the NFPA and that copyright and all rights in materials produced by NFPA Technical Committees are owned by the NFPA and that the NFPA may register copyright in its own name.

Signature (Required) _____

PLEASE USE SEPARATE FORM FOR EACH PROPOSAL • NFPA Fax: (617) 770-3500

Mail to: Secretary, Standards Council, National Fire Protection Association, 1 Batterymarch Park, Quincy, MA 02169-7471

6/8/2007

Copyright National Fire Protection Association
Provided by IHS under license with NFPA
No reproduction or networking permitted without license from IHS
Not for Resale