NFPA 82

Standard on Incinerators and Waste and Linen Handling Systems and Equipment

2004 Edition

NFPA, 1 Batterymarch Park, Quincy, MA 02169-7471
An International Codes and Standards Organization

Copyright National Fire Protection Association
Provided by IHS under license with NFPA
No reproduction or networking permitted without license from IHS

Not for Resale

IMPORTANT NOTICES AND DISCLAIMERS CONCERNING NFPA DOCUMENTS

NOTICE AND DISCLAIMER OF LIABILITY CONCERNING THE USE OF NFPA DOCUMENTS

NFPA codes, standards, recommended practices, and guides, of which the document contained herein is one, are developed through a consensus standards development process approved by the American National Standards Institute. This process brings together volunteers representing varied viewpoints and interests to achieve consensus on fire and other safety issues. While the NFPA administers the process and establishes rules to promote fairness in the development of consensus, it does not independently test, evaluate, or verify the accuracy of any information or the soundness of any judgments contained in its codes and standards.

The NFPA disclaims liability for any personal injury, property or other damages of any nature whatsoever, whether special, indirect, consequential or compensatory, directly or indirectly resulting from the publication, use of, or reliance on this document. The NFPA also makes no guaranty or warranty as to the accuracy or completeness of any information published herein.

In issuing and making this document available, the NFPA is not undertaking to render professional or other services for or on behalf of any person or entity. Nor is the NFPA undertaking to perform any duty owed by any person or entity to someone else. Anyone using this document should rely on his or her own independent judgment or, as appropriate, seek the advice of a competent professional in determining the exercise of reasonable care in any given circumstances.

The NFPA has no power, nor does it undertake, to police or enforce compliance with the contents of this document. Nor does the NFPA list, certify, test or inspect products, designs, or installations for compliance with this document. Any certification or other statement of compliance with the requirements of this document shall not be attributable to the NFPA and is solely the responsibility of the certifier or maker of the statement.

Copyright National Fire Protection Association
Provided by IHS under license with NFPA
No reproduction or networking permitted without license from IHS
Not for Resale

ADDITIONAL NOTICES AND DISCLAIMERS

Updating of NFPA Documents

Users of NFPA codes, standards, recommended practices, and guides should be aware that these documents may be superseded at any time by the issuance of new editions or may be amended from time to time through the issuance of Tentative Interim Amendments. An official NFPA document at any point in time consists of the current edition of the document together with any Tentative Interim Amendments and any Errata then in effect. In order to determine whether a given document is the current edition and whether it has been amended through the issuance of Tentative Interim Amendments or corrected through the issuance of Errata, consult appropriate NFPA publications such as the National Fire Codes® Subscription Service, visit the NFPA website at www.nfpa.org, or contact the NFPA at the address listed below.

Interpretations of NFPA Documents

A statement, written or oral, that is not processed in accordance with Section 6 of the Regulations Governing Committee Projects shall not be considered the official position of NFPA or any of its Committees and shall not be considered to be, nor be relied upon as, a Formal Interpretation.

Patents

The NFPA does not take any position with respect to the validity of any patent rights asserted in connection with any items which are mentioned in or are the subject of NFPA codes, standards, recommended practices, and guides, and the NFPA disclaims liability for the infringement of any patent resulting from the use of or reliance on these documents. Users of these documents are expressly advised that determination of the validity of any such patent rights, and the risk of infringement of such rights, is entirely their own responsibility.

NFPA adheres to applicable policies of the American National Standards Institute with respect to patents. For further information contact the NFPA at the address listed below.

Law and Regulations

Users of these documents should consult applicable federal, state, and local laws and regulations. NFPA does not, by the publication of its codes, standards, recommended practices, and guides, intend to urge action that is not in compliance with applicable laws, and these documents may not be construed as doing so.

Copyrights

This document is copyrighted by the NFPA. It is made available for a wide variety of both public and private uses. These include both use, by reference, in laws and regulations, and use in private self-regulation, standardization, and the promotion of safe practices and methods. By making this document available for use and adoption by public authorities and private users, the NFPA does not waive any rights in copyright to this document.

Use of NFPA documents for regulatory purposes should be accomplished through adoption by reference. The term "adoption by reference" means the citing of title, edition, and publishing information only. Any deletions, additions, and changes desired by the adopting authority should be noted separately in the adopting instrument. In order to assist NFPA in following the uses made of its documents, adopting authorities are requested to notify the NFPA (Attention: Secretary, Standards Council) in writing of such use. For technical assistance and questions concerning adoption of NFPA documents, contact NFPA at the address below.

For Further Information

All questions or other communications relating to NFPA codes, standards, recommended practices, and guides and all requests for information on NFPA procedures governing its codes and standards development process, including information on the procedures for requesting Formal Interpretations, for proposing Tentative Interim Amendments, and for proposing revisions to NFPA documents during regular revision cycles, should be sent to NFPA headquarters, addressed to the attention of the Secretary, Standards Council, NFPA, 1 Batterymarch Park, P.O. Box 9101, Quincy, MA 02269-9101.

For more information about NFPA, visit the NFPA website at www.nfpa.org.

Copyright National Fire Protection Association
Provided by IHS under license with NFPA
No reproduction or networking permitted without license from IHS
Not for Resale

Copyright © 2004, National Fire Protection Association, All Rights Reserved

NFPA 82

Standard on

Incinerators and Waste and Linen Handling Systems and Equipment

2004 Edition

This edition of NFPA 82, *Standard on Incinerators and Waste and Linen Handling Systems and Equipment*, was prepared by the Technical Committee on Incinerators and Waste Handling Systems and acted on by NFPA at its November Association Technical Meeting held November 15–19, 2003, in Reno, NV. It was issued by the Standards Council on January 16, 2004, with an effective date of February 5, 2004, and supersedes all previous editions.

This edition of NFPA 82 was approved as an American National Standard on January 16, 2004.

Origin and Development of NFPA 82

This standard was first adopted by the NFPA in 1948 on recommendation of the Committee on Field Practice. In 1953, a completely revised edition of the text on incinerators was prepared by a representative subcommittee and adopted by the NFPA on recommendation of the Committee on Building Construction. Responsibility for the subject of incinerators was turned over to the Committee on Chimneys and Heating Equipment in 1956. Revised editions were adopted in 1955, 1958, 1960, 1969, 1970, 1971, and 1972. The original 1948 text covered both rubbish handling and incinerators; the 1953, 1955, 1958, and 1960 revisions covered only incinerators. In the 1960 edition, incinerators and rubbish handling were covered by separate standards, NFPA 82, *Standard on Incinerators*, and NFPA 82A, *Standard for Rubbish Handling*, respectively, with NFPA 82A remaining unchanged from the 1948 edition. In the 1969 edition, the subject of rubbish handling was included with incinerators, and NFPA 82A was discontinued as a separate standard. The 1977 edition was expanded to include linen handling systems, and the 1983 edition represented a partial revision, which was mainly editorial.

The 1990 edition contained minor revisions to Chapters 1 and 2, including a minor change to the Scope section. Chapters 3 and 4 were completely revised, and a new Appendix A was added to provide technical information to facilitate the selection of chimney materials for handling saturated and corrosive gases. The entire section on domestic incinerators was deleted from the 1990 edition.

For the 1994 edition, Chapters 3 and 4 were combined into one chapter (new Chapter 3). Limited-combustible construction was recognized by a new definition and by a new exception that allowed limited-combustible construction for a gravity chute enclosure where a building is protected throughout by a supervised automatic sprinkler system. Also, new Chapters 4 and 7 were added to address waste handling systems other than chute systems and waste processing equipment other than compactors.

The 1999 edition clarified that NFPA 82 does not apply to one- and two-family residential structures. Chapter 3 was modified to allow for a maximum 45 degree chute offset above the top-loading door. Additionally, Chapter 3 was modified to reduce the minimum linen chute size to 20 in. and to reduce the termination height of chute venting to 3 ft above the roof of the building. Chapter 5 was also modified to delete the requirements associated with domestic compactors.

The 2004 edition has been revised and restructured to meet the NFPA *Manual of Style*. Technical changes include clarification of the difference between discharge doors serving waste chutes and those serving linen chutes and clarification of the dimensional requirements for service opening rooms.

--`,,`-`-`,,`,,`,`,,`---

Copyright National Fire Protection Association
Provided by IHS under license with NFPA
No reproduction or networking permitted without license from IHS
Not for Resale

Technical Committee on Incinerators and Waste Handling Systems

Sharon Stone Gilyeat, *Chair*
Koffel Associates, Inc., MD [SE]

Michael F. Bracken, Wilkinson Hi-Rise, LLC, FL [M]
Joseph M. DeRosier, U.S. Department of Veterans Affairs, MI [U]
Robert F. English, Valiant Products, Inc., FL [M]
Daniel J. Kaiser, Underwriters Laboratories Inc., IL [RT]
Robert E. McRee, Standards International Inc., NC [SE]
Janak B. Patel, Bechtel Savannah River Company, GA [U]
Christopher R. Schulz, Van-Packer Company, Inc., IL [M]

Alternates

Tammy Lynn Bitting, Van-Packer Company, IL [M]
(Alt. to C. R. Schulz)
Jennifer Holloman, Koffel Associates, Inc., MD [SE]
(Alt. to S. S. Gilyeat)
Lucinda Livingston, Sparks Regional Medical Center, AR [U]
(Voting Alt.)
James W. Rice, U.S. Department of Veterans Affairs, MI [U]
(Alt. to J. M. DeRosier)

James D. Lake, NFPA Staff Liaison

This list represents the membership at the time the Committee was balloted on the final text of this edition. Since that time, changes in the membership may have occurred. A key to classifications is found at the back of the document.

NOTE: Membership on a committee shall not in and of itself constitute an endorsement of the Association or any document developed by the committee on which the member serves.

Committee Scope: This Committee shall have primary responsibility for documents on the fire-safe installation and use of incinerators, compactors, converters, other waste handling systems, and laundry (linen) handling systems.

Copyright National Fire Protection Association
Provided by IHS under license with NFPA
No reproduction or networking permitted without license from IHS
Not for Resale

Contents

Chapter 1 Administration **82–** 4
1.1 Scope **82–** 4
1.2 Purpose. (Reserved) **82–** 4
1.3 Application **82–** 4
1.4 Retroactivity **82–** 4
1.5 Equivalency **82–** 4

Chapter 2 Referenced Publications **82–** 4
2.1 General **82–** 4
2.2 NFPA Publications **82–** 4
2.3 Other Publications **82–** 4

Chapter 3 Definitions **82–** 4
3.1 General **82–** 4
3.2 NFPA Official Definitions **82–** 4
3.3 General Definitions **82–** 5

Chapter 4 Incinerators **82–** 5
4.1 General **82–** 5
4.2 Incinerators **82–** 6
4.3 Chimneys for Incinerators **82–** 8
4.4 Outdoor Incinerators **82–**10

Chapter 5 Waste and Linen Chutes and Transport Systems **82–**10
5.1 General. **82–**10
5.2 Gravity Waste or Linen Chutes **82–**10
5.3 Full Pneumatic Waste and Linen Conveying Systems **82–**12
5.4 Gravity Pneumatic Trash or Linen Conveying System **82–**14

Chapter 6 Other Waste Handling Systems **82–**14
6.1 General **82–**14
6.2 Waste Spillage Control **82–**14
6.3 Enclosure Requirements **82–**14
6.4 Automatic Sprinklers **82–**15

Chapter 7 Waste Compactors **82–**15
7.1 General **82–**15
7.2 Automatic Sprinklers **82–**15

Chapter 8 Waste Storage Rooms **82–**15
8.1 General **82–**15
8.2 Fire Separation **82–**15
8.3 Automatic Sprinklers **82–**15

Chapter 9 Other Waste Processing Equipment **82–**15
9.1 General **82–**15
9.2 Fire Separation **82–**15
9.3 Explosion Protection **82–**15
9.4 Automatic Sprinklers **82–**15

Annex A Explanatory Material **82–**15

Annex B Informational References **82–**20

Index **82–**21

Copyright National Fire Protection Association
Provided by IHS under license with NFPA
No reproduction or networking permitted without license from IHS
Not for Resale

NFPA 82

Standard on

Incinerators and Waste and Linen Handling Systems and Equipment

2004 Edition

IMPORTANT NOTE: This NFPA document is made available for use subject to important notices and legal disclaimers. These notices and disclaimers appear in all publications containing this document and may be found under the heading "Important Notices and Disclaimers Concerning NFPA Documents." They can also be obtained on request from NFPA or viewed at www.nfpa.org/disclaimers.

NOTICE: An asterisk (*) following the number or letter designating a paragraph indicates that explanatory material on the paragraph can be found in Annex A.

Changes other than editorial are indicated by a vertical rule beside the paragraph, table, or figure in which the change occurred. These rules are included as an aid to the user in identifying changes from the previous edition. Where one or more complete paragraphs have been deleted, the deletion is indicated by a bullet (•) between the paragraphs that remain.

A reference in brackets [ ] following a section or paragraph indicates material that has been extracted from another NFPA document. As an aid to the user, Annex B lists the complete title and edition of the source documents for both mandatory and nonmandatory extracts. Editorial changes to extracted material consist of revising references to an appropriate division in this document or the inclusion of the document number with the division number when the reference is to the original document. Requests for interpretations or revisions of extracted text shall be sent to the technical committee responsible for the source document.

Information on referenced publications can be found in Chapter 2 and Annex B.

Chapter 1 Administration

1.1 Scope.

1.1.1 This standard covers requirements for the installation and use of waste storage rooms, containers, handling systems, incinerators, compactors, and linen and laundry handling systems.

1.1.2 This standard does not include design criteria for the purpose of reducing air pollution. For such criteria, consult the authorities having jurisdiction.

1.1.3 The requirements in this standard shall not apply to one- or two-family residential structures.

1.2 Purpose. (Reserved)

1.3* Application. This standard shall be applied to new construction and new equipment, as determined by the authority having jurisdiction.

1.4 Retroactivity. This standard shall not require the alteration or replacement of existing construction or equipment currently in use, provided that the owner establishes appropriate administrative, maintenance, and training programs that provide equivalent safety.

1.5 Equivalency. Nothing in this standard is intended to prevent the use of new methods or devices of equivalent or superior quality, strength, fire resistance, effectiveness, durability, and safety over those prescribed by this standard.

1.5.1 Technical documentation shall be submitted to the authority having jurisdiction to demonstrate equivalency.

1.5.2 The system, method, or device shall be approved for the intended purpose by the authority having jurisdiction.

Chapter 2 Referenced Publications

2.1 General. The documents or portions thereof listed in this chapter are referenced within this standard and shall be considered part of the requirements of this document.

2.2 NFPA Publications. National Fire Protection Association, 1 Batterymarch Park, Quincy, MA 02169-7471.

NFPA 13, *Standard for the Installation of Sprinkler Systems,* 2002 edition.

NFPA 31, *Standard for the Installation of Oil-Burning Equipment,* 2001 edition.

NFPA 54, *National Fuel Gas Code,* 2002 edition.

NFPA 58, *Liquefied Petroleum Gas Code,* 2004 edition.

NFPA 70, *National Electrical Code®,* 2002 edition.

NFPA 90A, *Standard for the Installation of Air-Conditioning and Ventilating Systems,* 2002 edition.

NFPA 211, *Standard for Chimneys, Fireplaces, Vents, and Solid Fuel-Burning Appliances,* 2003 edition.

NFPA 259, *Standard Test Method for Potential Heat of Building Materials,* 2003 edition.

NFPA 5000™, *Building Construction and Safety Code™,* 2003 edition.

2.3 Other Publications.

2.3.1 ASTM Publications. American Society for Testing and Materials, 100 Barr Harbor Drive, West Conshohocken, PA 19428-2959.

ASTM C 27, *Standard Classification for Fireclay and High-Alumina Refractory Brick*, 1993.

ASTM C 199, *Standard Test Method for Pier Test for Refractory Mortars*, 1994.

2.3.2 ASHRAE Publication. American Society of Heating, Refrigerating and Air Conditioning Engineers, Inc., 1791 Tullie Circle, N.E., Atlanta, GA 30329.

ASHRAE Handbook, *HVAC Systems and Equipment,* 2000.

Chapter 3 Definitions

3.1* General. The definitions contained in this chapter shall apply to the terms used in this standard. Where terms are not included, common usage of the terms shall apply.

3.2 NFPA Official Definitions.

3.2.1* Approved. Acceptable to the authority having jurisdiction.

3.2.2* Authority Having Jurisdiction (AHJ). An organization, office, or individual responsible for enforcing the requirements of a code or standard, or for approving equipment, materials, an installation, or a procedure.

Copyright National Fire Protection Association
Provided by IHS under license with NFPA
No reproduction or networking permitted without license from IHS
Not for Resale

3.2.3 Labeled. Equipment or materials to which has been attached a label, symbol, or other identifying mark of an organization that is acceptable to the authority having jurisdiction and concerned with product evaluation, that maintains periodic inspection of production of labeled equipment or materials, and by whose labeling the manufacturer indicates compliance with appropriate standards or performance in a specified manner.

3.2.4* Listed. Equipment, materials, or services included in a list published by an organization that is acceptable to the authority having jurisdiction and concerned with evaluation of products or services, that maintains periodic inspection of production of listed equipment or materials or periodic evaluation of services, and whose listing states that either the equipment, material, or service meets appropriate designated standards or has been tested and found suitable for a specified purpose.

3.2.5 Shall. Indicates a mandatory requirement.

3.2.6 Standard. A document, the main text of which contains only mandatory provisions using the word "shall" to indicate requirements and which is in a form generally suitable for mandatory reference by another standard or code or for adoption into law. Nonmandatory provisions shall be located in an appendix or annex, footnote, or fine-print note and are not to be considered a part of the requirements of a standard.

3.3 General Definitions.

3.3.1 Combustible. Capable of undergoing combustion.

3.3.2* Gravity Waste or Linen Chutes. An enclosed vertical passageway (riser) in a building, used for transferring trash or linen by gravity to a room at the bottom or to an interface to a compactor.

3.3.3* Incinerator. Equipment predominantly designed for burning solid waste.

3.3.4* Limited Combustible. A building construction material not complying with the definition of noncombustible material that, in the form in which it is used, has a potential heat value not exceeding 3500 Btu/lb (8141 kJ/kg), where tested in accordance with NFPA 259, *Standard Test Method for Potential Heat of Building Materials*, and complies with (a) or (b): (a) materials having a structural base of noncombustible material, with a surfacing not exceeding a thickness of ⅛ in. (3.2 mm) that has a flame spread index not greater than 50; and (b) materials, in the form and thickness used, other than as described in (a), having neither a flame spread index greater than 25 nor evidence of continued progressive combustion and of such composition that surfaces that would be exposed by cutting through the material on any plane would have neither a flame spread index greater than 25 nor evidence of continued progressive combustion. (Materials subject to increase in combustibility or flame spread index beyond the limits herein established through the effects of age, moisture, or other atmospheric condition shall be considered combustible.) [**33:**3.3]

3.3.5 Noncombustible. Not capable of supporting combustion.

3.3.6 Waste Compactor. A device using electro-mechanical-hydraulic means to reduce the volume of waste and to package it in the reduced condition.

3.3.7 Waste or Linen Conveying Systems.

3.3.7.1 ***Full Pneumatic.*** A closed system consisting of loading stations with inner doors and a fire-rated, normally locked, outer (intake) door; normally closed air damper above the topmost loading station; transport piping, both vertical and horizontal; waste or linen collector; fan with a fan damper; and a central process controller.

3.3.7.2 ***Gravity Pneumatic Transport System.*** A combination of a gravity chute and a horizontal pneumatic transport system. The gravity pneumatic system includes gravity chutes with a material discharge valve at the bottom, an air source at or near the bottom of the chute, air control dampers, horizontal piping with a pipe tee to connect to the chute, a collector, and a fan and fan damper.

3.3.8 Waste Processing Systems and Equipment. Devices and processes used to change the physical form or characteristics of waste.

Chapter 4 Incinerators

4.1 General.

4.1.1 Provision for Auxiliary Fuel.

4.1.1.1 Gas-burning installations shall be in accordance with the applicable provisions of NFPA 54, *National Fuel Gas Code*, and NFPA 58, *Liquefied Petroleum Gas Code.*

4.1.1.2 Oil-burning installations shall comply with NFPA 31, *Standard for the Installation of Oil-Burning Equipment.*

4.1.1.3 Fuel burners of all incinerators shall be equipped with safety controls that will automatically shut off the fuel supply to the burner in the event the burner fails to ignite or its flame becomes extinguished or in the event of insufficient draft.

4.1.2 Electrical Supply. The electrical supply to an incinerator shall be installed in accordance with NFPA 70, *National Electrical Code.*

4.1.3 Air for Combustion and Ventilation.

4.1.3.1 Provision shall be made for an adequate supply of air for combustion and ventilation to enter the room in which an incinerator is located.

4.1.3.2 Fans shall be permitted to be installed to deliver air to the incinerator room, provided they are in operation whenever the incinerator is in use.

4.1.3.3 Rooms in which incinerators are installed shall be furnished air for combustion and ventilation by one of the following means:

(1) A screened or louvered ventilator opening or other suitable air intake, which, if communicating to other parts of the building, shall be protected by an approved fire damper
(2) A duct leading from the incinerator room to the outdoors
(3) A duct leading to a boiler or furnace room cut off as prescribed in Section 4.3 and provided with sufficient air supply for both rooms

4.1.3.4 The opening or duct specified in 4.1.3.3 shall be sized so as to provide all air requirements, including those for waste combustion, auxiliary fuel combustion, room temperature control, and general area ventilation, where applicable.

4.1.3.5 Air ducts extending to or from an incinerator room through other parts of a building shall be constructed and installed in accordance with NFPA 90A, *Standard for the Installation of Air-Conditioning and Ventilating Systems.*

Copyright National Fire Protection Association
Provided by IHS under license with NFPA
No reproduction or networking permitted without license from IHS
Not for Resale

4.1.4 Spark Arresters.

4.1.4.1 Where the nature of the waste being incinerated produces fly ash emissions, the incinerator stacks shall be protected by one of the following:

(1) Spark arresters installed on incinerator stacks
(2) A wet scrubber or other emission control system or component installed between the incinerator and the stack such that fly ash cannot pass directly from the incinerator to the stack
(3) Approved design and control features that prevent the entrainment of fly ash from the incinerator to the stack under all operating conditions

4.1.4.2 The net free area of the arrester shall be not less than four times the net free area of the outlet of the chimney flue it serves.

4.1.4.3 Arresters shall have a vertical height of not less than 1.3 times the minimum diameter of the chimney flue or the minimum horizontal dimension of a rectangular chimney flue.

4.1.4.4 Arresters, including bolts, rivets, screws, and supporting members, shall be made of heat- and corrosion-resistant materials.

4.1.4.5 Openings shall not permit the passage of spheres having a diameter larger than 12.7 mm (½ in.) or block the passage of spheres having a diameter of less than 9.5 mm (⅜ in.).

4.1.4.6 Means shall be provided for securely attaching the spark arresters to chimneys to provide adequate support and prevent movement of the arresters.

4.1.4.7 Spark screens shall be replaceable.

4.2 Incinerators.

4.2.1 Design and Construction. The design and construction of the incinerator and all associated components shall be such that, in service, they will not crack, warp, or otherwise fail structurally so as to permit flame passage or emission of combustion gases or sparks into the building.

4.2.1.1 Incinerators shall be built in accordance with the following requirements:

(1) All combustion shall take place within the combustion chamber designed for combustion temperatures.
(2) Combustion shall not take place in breaching or chimneys unless they are designed as combustion chambers.
(3) Incinerators designed for positive pressures shall be gastight.
(4) The combustion chamber, inner walls, roofs, bridges, walls, and curtain walls shall be constructed so as to withstand the combustion temperatures involved and shall maintain their integrity under all operating conditions.
(5) Metal stays, lintels, or other supports shall not be exposed to the interior of the combustion chamber.
(6) An exterior masonry casing shall be reinforced with structural steel framework, and an exterior steel casing shall be reinforced with structural steel members such that the casing will withstand interior thrusts from arches and be capable of supporting all doors and burner equipment.
(7) The steel casing or framework shall be erected and set plumb before any brickwork is done.
(8) Cylindrical outer casings made of steel not less than ¼ in. (6.4 mm) thick shall not be required to be reinforced.
(9) All incinerator structures shall be designed to comply with applicable building codes, and consideration shall be given to the most adverse conditions of seismic, wind, dead, live, moving, concentrated, erection, and thermal loadings; corrosion allowance; or combinations thereof.
(10) Openings shall be provided so that all parts of the incinerator can be cleaned, including the ash pit, the combustion chamber, the passes of separation chambers, and the incinerator flue.
(11) Cleanouts shall be closed by tight-fitting doors or covers, securely latched, or otherwise held in a closed position.
(12) Ash pit and combustion chamber closures and frames shall be of cast iron or equivalent, with the frames securely attached to the incinerator.

4.2.1.2 No part of an incinerator shall be used as a wall, roof, or floor of a building.

4.2.1.3 Incinerators shall be designed with internal insulation or refractory or shall be otherwise protected by location, guard rails, or shields such that all areas or surfaces normally accessible to personnel shall not exceed 71.1°C (160°F).

4.2.1.4 External insulation over incinerator shells shall not be utilized in achieving the temperature specified in 4.2.1.3, since severe thermal damage could result. Handles of operating doors shall not exceed a 4.4°C (40°F) rise for metallic handles and a 15.6°C (60°F) rise for nonmetallic handles.

4.2.2 Explosion Relief.

4.2.2.1 Explosion relief shall be provided.

4.2.2.2 The area of explosion relief shall be not less than 0.09 m^2 (1 ft^2) of relief area for every 3 m^3 (100 ft^3) of primary combustion chamber volume.

4.2.2.3 Where the exhaust chimney will not serve the purpose of explosion relief, a door or panel shall be provided and arranged to allow the door or panel to return to a closed position promptly after pressure has been released.

4.2.2.4 Exhaust stack areas that typically are closed off with valving or stack caps for directing combustion-gas effluent to other process equipment, such as heat recovery boilers, cleanup equipment, or similar installations, shall not be used in the calculation of the explosion venting area specified in 4.2.1.2.

4.2.2.5 Systems equipped with wet ash–type removal modules where a water seal exists between the outside and the incinerator chamber atmosphere and where this water seal does not exceed the equipvalent of 1.49 kPa (6 in. water column) and the interconnecting passageway between the internal ash port and external ash removal device is vertically oriented directly beneath the ash port without changes in direction shall be permitted to be considered to offer an explosion relief area for the minimum required area, based on the following:

(1) The internal dimensions of the ash port
(2) The smallest internal dimensions of the connecting and vertical passageway
(3) The normal projected area of the water surface interface

4.2.2.6 Wet ash systems wherein ash is expelled by mechanical devices, necessitating a normal change in direction of ash flow—that is, from vertical to horizontal—shall not be considered to provide an effective explosion relief area.

4.2.2.7 All explosion relief devices shall be oriented on the incinerator chamber so as not to be closer than 90 degrees in side elevation or plan view to the normal operator position.

Copyright National Fire Protection Association
Provided by IHS under license with NFPA
No reproduction or networking permitted without license from IHS
Not for Resale

4.2.2.8 All explosion relief devices shall be placed in areas generally inaccessible to normal personnel activities and shall be properly guarded and posted with safety signs on all sides indicating the potential safety hazard of the vent area.

4.2.3 Placement.

4.2.3.1 Incinerators shall be placed on properly designed foundations of masonry or reinforced concrete or on noncombustible material having a fire resistance rating of not less than 3 hours, provided such support is independent of the building construction and the load is transferred to the ground.

4.2.3.2 All incinerator combustion chambers shall be elevated above concrete bearing surfaces through the use of pedestals, cradles, skids, or other means to provide a minimum of 101.6 mm (4 in.) clear air circulation space between the concrete bearing surface and the closest surface of the underside of the combustion chamber.

4.2.3.3 Where this elevation is not practical, as in the case of large field-erected incinerators, other equivalent means shall be provided through the use of increased insulation, natural or forced circulation, or other methods acceptable to the authority having jurisdiction to adequately protect the concrete bearing surfaces from thermal damage.

4.2.4 Clearances.

4.2.4.1 Incinerators shall be installed to provide a clearance to combustible material of not less than 914 mm (36 in.) at the sides and rear, not less than 1220 mm (48 in.) above, and not less than 2.4 m (8 ft) at the front of the incinerator.

4.2.4.2 For an incinerator encased in brick, the clearance shall be permitted to be 914 mm (36 in.) above the incinerator and 457 mm (18 in.) at the sides and the rear of the incinerator.

4.2.4.3 A clearance of not less than 305 mm (12 in.) shall be provided from the incinerator to the walls or ceilings of noncombustible construction.

4.2.4.4 Where it is not possible to place combustible material on the outer or upper side thereof, a clearance of not less than 3 in. (76.2 mm) shall be permitted to be provided from commercial and industrial incinerators to walls or ceilings of noncombustible construction.

4.2.4.5 Incinerators that are listed specifically for installation at lesser clearances than those specified in 4.2.4.1 and 4.2.4.2 shall be installed in accordance with the conditions of such listing, provided that, in any case, the clearances shall be sufficient to afford accessibility for firing, cleanout, and any necessary servicing as set forth in 4.2.4.6 through 4.2.4.10.

4.2.4.6 Clearance shall be provided around the incinerator and its appurtenances to facilitate cleaning, repairing, and servicing.

4.2.4.7 Clearance shall be provided to allow the cleanout doors to be opened completely so that all parts of the combustion chamber, ash pit, separation chambers, and so forth, can be reached and so that implements used for this purpose can be freely manipulated.

4.2.4.8 All dampers, gates, burners, valves, levers, and so forth, shall be accessible for repair and adjustment or replacement.

4.2.4.9 No construction shall be located closer than 406 mm (16 in.) to any part of an incinerator.

4.2.4.10 Noncombustible structural members 610 mm (24 in.) wide or less, parallel to the incinerator, shall be permitted to be located as close as 152 mm (6 in.) to the incinerator, provided such members do not reduce accessibility to any moving parts of the incinerator.

4.2.5 Incinerator Charging.

4.2.5.1 A waste charging system and appropriate controls shall be provided to prevent the direct discharge of flames, combustion gases, and heat from the incinerator during waste loading operations.

4.2.5.2 Incinerators that are loaded on a batch basis, during which the charging door is not open while waste combustion is taking place, shall not be required to have a mechanical charging system.

4.2.5.3 The combustion chamber of an incinerator shall not be charged through the floor immediately above such incinerator unless the charging chute is designed with dampering and controls that would prevent the direct passage of combustion products and radiant heat through the chute into the charging room.

4.2.5.4 The charging hood and chute shall be constructed of not less than 12 U.S. gauge steel casing and shall be lined with not less than 114 mm (4½ in.) of firebrick (Type F, medium duty, or the equivalent as defined in ASTM C 27, *Standard Classification for Fire Clay and High-Alumina Refractory Brick*).

4.2.5.4.1 This charging hopper shall not exceed 1.8 m (6 ft) in length, measured from the floor opening to the outside of the roof of the incinerator combustion chamber.

4.2.5.5 The charging opening shall be protected by a cover extending beyond the edges of the opening for at least 51 mm (2 in.) on all sides and lined with not less than 63.5 mm (2½ in.) of refractory material.

4.2.5.6 The charging-floor opening shall be located in a room with walls and floor-ceiling assemblies that have a fire resistance rating of not less than 2 hours, with openings protected by approved self-closing or automatic-closing 3 hour fire doors.

4.2.5.6.1 Doors shall be kept closed during the charging operation and at other times, except when waste material is delivered to the room.

4.2.6 Incinerator Residue Removal.

4.2.6.1 A system and appropriate approved measures shall be provided to adequately quench or fully contain, or both, ash residues removed from the incinerator during cleanout operations.

4.2.6.2 These shall include such features as water sprays, a wet quench pit, or a special containment enclosure to enable ash cleanout with minimal exposure to ambient conditions.

4.2.7 Incinerator Rooms for Incinerators.

4.2.7.1 Incinerators shall be enclosed within a room separated from other parts of the building by walls, partitions, floor, and floor-ceiling assemblies constructed of noncombustible material and having a fire resistance rating of not less than 2 hours and used for no other purpose.

4.2.7.1.1 Storage containers of waste material to be burned and building heating equipment shall be permitted to be located in the incinerator room.

Copyright National Fire Protection Association
Provided by IHS under license with NFPA
No reproduction or networking permitted without license from IHS
Not for Resale

4.2.7.2 Door(s) or other openings in rooms containing incinerators that communicate with other areas of the building shall be protected by approved self-closing or automatic-closing 1½ hour fire doors.

4.2.7.3 Automatic sprinklers shall be provided in incinerator rooms in accordance with NFPA 13.

4.3* Chimneys for Incinerators.

4.3.1 General.

4.3.1.1 Chimneys for incinerators shall comply with the provisions of NFPA 211 and Section 4.3.

4.3.1.2 The chimney shall serve only the incinerator, unless the chimney construction is acceptable for all devices being served.

4.3.1.3 The chimney shall be designed and proportioned to provide adequate draft for proper operation of the incinerator in accordance with the requirements of the ASHRAE handbook *HVAC Systems and Equipment* or other approved methods.

4.3.1.4 The chimneys shall be supported on properly designed foundations of masonry, reinforced portland cement concrete, or reinforced refractory concrete.

4.3.1.5 If incinerator walls or the roof of the combustion chamber support the chimney, they shall be built to support the load imposed.

4.3.1.6 Masonry chimneys shall be permitted to be supported on noncombustible material having a fire resistance rating of not less than 3 hours where such supports are independent of the building construction and the load is transferred to the ground.

4.3.1.7 A factory-built chimney, if so listed, and a metal chimney also shall be permitted to be supported at intervals by the building structure, in which case expansion joints shall be provided at each support level. All joints shall be liquidtight or of a design such that liquid will drain to the interior of the chimney.

4.3.1.8 Cleanout openings provided in chimneys shall be equipped with ferrous metal doors and frames arranged to remain tightly closed when not in use. A clearance of not less than 914 mm (36 in.) shall be provided between cleanout doors and combustible material.

4.3.1.9 Drains shall be provided at the base of all chimneys to allow the removal of condensed flue products and shall be designed to avoid clogging.

4.3.1.10 Breachings shall be designed or otherwise protected in an approved manner, such as by guard rails or shields, to protect personnel from accidental contact with surfaces that exceed 71.1°C (160°F).

4.3.1.11 External insulation shall not be used on hot breachings.

4.3.2 Listed Medium-Heat Chimneys. Listed medium-heat appliance chimneys shall be permitted to be used and shall be installed in accordance with the conditions of the listing and the manufacturer's instructions.

4.3.3 Metal Chimneys.

4.3.3.1 Metal chimneys shall be properly riveted or welded, securely supported, and constructed in accordance with good engineering practice.

4.3.3.2 Metal chimneys shall be constructed of steel or cast iron. Sheet steel shall have a thickness not less than that indicated in Table 4.3.3.2.

4.3.3.3 Where secondary combustion temperatures do not exceed 982°C (1800°F), metal chimneys shall be lined with 114 mm (4½ in.) of high-duty, spall-resistant firebrick (as defined in ASTM C 27, *Standard Classification for Fireclay and High-Alumina Refractory Brick*) laid in high-duty refractory mortar (as defined in ASTM C 199, *Standard Test Method for Pier Test for Refractory Mortars*).

4.3.3.3.1 The lining shall start at the base of the chimney and extend continuously to the top.

4.3.3.3.2* Equivalent linings of equivalent thickness, such as Class A or better alumina-silica base castable refractories or Class O or better insulating castable refractories, shall be permitted to be used.

4.3.3.4 Where secondary combustion temperatures exceed 982°C (1800°F), metal chimneys shall be lined with 114 mm (4½ in.) of super-duty, spall-resistant refractory brick (as defined in ASTM C 27, *Standard Classification for Fireclay and High-Alumina Refractory Brick*) laid in refractory mortar.

4.3.3.4.1 The refractory mortar shall be high-duty for temperatures up to 1500°C (2730°F) and super-duty or better for temperatures up to 1600°C (2910°F).

Table 4.3.3.2 Minimum Thickness of Sheet Steel Chimneys

Manufacturer Standard U.S. Gauge Number	Minimum Thickness		Area		Equivalent Round Diameter	
	mm	in.	m^2	$in.^2$	mm	in.
16	1.37	0.054	Up to 0.0994	Up to 154	Up to 356	Up to 14
14	1.75	0.069	0.0999–0.1296	155–201	>356–406	>14–16
12	2.49	0.098	0.1303–0.1638	202–254	>406–457	>16–18
10	3.25	0.128	>0.1638	>254	>457	>18

Note: Regardless of minimum thicknesses in this table, the thickness of sheet metal shall be adequate to meet the requirements of 4.3.3.6.

Copyright National Fire Protection Association
Provided by IHS under license with NFPA
No reproduction or networking permitted without license from IHS
Not for Resale

4.3.3.4.2 The lining shall start at the base of the chimney and extend continuously to the top.

4.3.3.4.3* Equivalent linings of equivalent thickness, such as Class B or better alumina-silica base castable refractories (as defined in ASTM C 27) in accordance with temperature requirements or Class P and Class Q insulating castable refractories (as defined in ASTM C 27) in accordance with temperature requirements, shall be permitted to be used.

4.3.3.5 Castable plastic refractories or other refractories shall be permitted to be used in metal chimneys in lieu of firebrick, provided such refractory is of equivalent heat and corrosion resistance.

4.3.3.5.1 Liners made of these refractories shall be supported by anchors made of corrosion-resistant steel capable of supporting the refractory load at 727°C (1500°F).

4.3.3.5.2 The insulating value shall be such that temperatures at the supports shall not exceed this temperature under all firing conditions.

4.3.3.6 Metal chimneys shall be properly riveted, welded, or bolted; securely supported; and constructed in accordance with good engineering practice as necessary to achieve the following conditions:

(1) Strength to resist stresses due to steady or gusting wind loads
(2) Adequate anchoring, bracing, and inherent strength to withstand seismic and wind-induced vibrational stresses
(3) Proper material thickness for durability, considering fuel analysis, gas temperature, and exposure
(4) Security against leakage of flue gases under positive pressure
(5) Allowance for thermal expansion of breaching and vertical sections

4.3.3.7 If a metal chimney extends through any story of a building above that in which the connected incinerator is located, it shall be enclosed in such upper stories within continuous walls that are constructed of noncombustible materials, such as masonry, and that extend from the ceiling of the incinerator room to or through the roof so as to retain the integrity of the fire separations as required by applicable building code provisions.

4.3.3.7.1 The walls shall have a fire resistance rating of not less than 1 hour if the building is less than four stories in height, or not less than 2 hours if the building is four or more stories in height, and shall conform to the following:

(1) The enclosure shall provide a space on all sides of the chimney sufficient to permit inspection and repair, but in no case shall the space be less than 305 mm (12 in.).
(2) The enclosing walls shall be without openings.

Exception: Doorways equipped with approved self-closing 1½ hour fire doors shall be permitted to be installed at various floor levels for inspection purposes.

4.3.4 Masonry Chimneys.

4.3.4.1 Where secondary combustion temperatures do not exceed 982°C (1800°F), masonry chimneys shall be constructed of solid masonry units or reinforced concrete with walls not less than 203 mm (8 in.) thick.

4.3.4.1.1 Such walls shall be lined with 114 mm (4½ in.) high-duty, spall-resistant firebrick (as defined in ASTM C 27, *Standard Classification for Fireclay and High-Alumina Refractory Brick*) laid in high-duty refractory mortar (as defined in ASTM C 199, *Standard Test Method for Pier Test for Refractory Mortars*).

4.3.4.1.2 The lining shall start at the base of the chimney and extend continuously to the top.

4.3.4.2 Where secondary combustion temperatures exceed 982°C (1800°F), masonry chimneys shall be constructed with double walls of solid masonry units or reinforced concrete.

4.3.4.2.1 Each wall shall not be less than 203 mm (8 in.) thick with an air space of not less than 51 mm (2 in.) between them.

4.3.4.2.2 The inside of the interior wall shall be lined with 114 mm (4½ in.) super-duty, spall-resistant firebrick laid in super-duty refractory mortar (as defined in ASTM C 27).

4.3.4.2.3 The lining shall start at the base of the chimney and extend continuously to the top.

4.3.4.3 Masonry chimneys shall be proved airtight by a smoke test after erection and before being put into service.

4.3.5 Chimney Clearances.

4.3.5.1 Listed chimneys shall be installed in accordance with the conditions of the manufacturer's instructions for clearances.

4.3.5.1.1 Exposed portions of chimneys or breachings that can be touched shall be so designed that maximum surface temperatures shall not exceed 39°C (70°F) above ambient temperature.

4.3.5.2 Masonry Chimneys. A clearance of not less than 102 mm (4 in.) shall be provided between the exterior surface of masonry chimneys and combustible material.

4.3.5.3 Exterior Metal Chimneys.

4.3.5.3.1 Exterior metal chimneys shall have a clearance of not less than 610 mm (24 in.) from a wall of wood frame construction and from any combustible material.

4.3.5.3.2 Exterior metal chimneys over 457 mm (18 in.) in diameter shall have a clearance of not less than 102 mm (4 in.), and those chimneys 457 mm (18 in.) or less in diameter shall have a clearance of not less than 51 mm (2 in.) from a building wall of other than wood frame construction.

4.3.5.3.3 An exterior metal chimney shall be installed with a minimum clearance of 610 mm (24 in.) to any door or window or to any walkway, unless insulated or shielded in an approved manner to prevent a person from coming in contact with the chimney.

4.3.5.4 Interior Metal Chimneys.

4.3.5.4.1 Within the same story of a building as that in which an incinerator is located, a metal chimney shall have a clearance of not less than 914 mm (36 in.) from a wall of wood frame construction and from any combustible material.

4.3.5.4.2 Interior metal chimneys over 457 mm (18 in.) in outside diameter shall have a clearance of not less than 102 mm (4 in.), and those 457 mm (18 in.) or less in outside diameter shall have a clearance of not less than 51 mm (2 in.) from a building wall of other than wood frame construction.

4.3.5.4.3 If a metal chimney passes through a roof constructed of combustible material, it shall be guarded by a ventilating thimble of galvanized iron or approved corrosion-resistant metal, extending not less than 229 mm. (9 in.) below and not less than 229 mm (9 in.) above the roof construction, and shall be of a size to provide not less than 457 mm (18 in.) clearance on all sides of the chimney.

Copyright National Fire Protection Association
Provided by IHS under license with NFPA
No reproduction or networking permitted without license from IHS
Not for Resale

4.3.6* Low-Temperature Chimneys and Breachings. Incinerator chimneys and breachings designed to handle saturated flue gases or flue gases with condensed acids shall be designed and constructed to be corrosion resistant under all operating conditions.

4.3.7 Chimney Termination.

4.3.7.1 Incinerator chimneys where the secondary combustion chamber is designed to be operated at 982°C (1800°F) or less shall extend not less than 3.0 m (10 ft) higher than any portion of any building within 7.6 m (25 ft).

4.3.7.1.1 Chimneys shall be permitted to be less than 3.1 m (10 ft) higher than other chimneys, vents, or open structural framing.

4.3.7.2 Incinerator chimneys where the secondary combustion chamber is designed to be operated at over 982°C (1800°F) shall extend not less than 6.1 m (20 ft) higher than any portion of any building within 15 m (50 ft).

4.3.7.2.1 Chimneys shall be permitted to be less than 3.1 m (10 ft) higher than other chimneys, vents, or open structural framing.

4.3.7.3 The terminus of the chimney flue for the incinerator shall be equipped with an approved spark arrester or protected in accordance with 4.1.4.1.

4.3.8 Chimney Connector or Breaching.

4.3.8.1 A chimney connector or breaching connecting an incinerator to a chimney shall be constructed of not lighter than 16 U.S. gauge steel if it is 305 mm (12 in.) or less in diameter or greatest cross-section dimension and of not lighter than 12 U.S. gauge steel if it exceeds 305 mm (12 in.) in diameter or greatest cross-section dimension.

4.3.8.1.1 Breachings that utilize listed medium-heat chimney sections shall be permitted, provided these sections are joined together with continuous welds, flanges, or couplings.

4.3.8.2 Chimney connectors or breaching up to 457 mm (18 in.) in diameter or greatest cross-section dimension shall be lined with not less than 63.5 mm (2½ in.) high-duty, spall-resistant refractory brick (as defined in ASTM C 27).

4.3.8.3 Chimney connectors or breaching over 457 mm (18 in.) in diameter or greatest cross-section dimension shall be lined with not less than 114 mm (4½ in.) of high-duty, spall-resistant refractory brick (as defined in ASTM C 27).

4.3.8.4 Castable plastic refractories or other refractories shall be permitted to be used in lieu of firebrick, provided such refractory is of equivalent heat and corrosion resistance.

4.3.8.4.1 Liners made of castable plastic refractories shall be supported by anchors made of corrosion-resistant steel capable of supporting the refractory load at 727°C (1500°F).

4.3.8.4.2 The insulating value shall be such that temperatures at the supports shall not exceed 727°C (1500°F) under all firing conditions.

4.3.8.5 The net internal free area of the connector shall be not less than the free area of the flue collar of the incinerator.

4.3.8.6 A chimney connector shall not be enclosed.

4.3.8.6.1 The connector shall be readily accessible for inspection and replacement throughout its entire length.

4.3.8.7* Chimney connectors or breachings of all commercial-institutional-type incinerators, including those of special design to produce low-temperature flue gases, shall conform with 4.3.8.

4.3.8.8 If a gas washer or scrubber is used, or if other arrangements are such that the natural draft is insufficient for proper operation of the incinerator, a draft inducer shall be permitted to be used.

4.3.8.8.1 In this event, the chimney shall be sized for natural-draft operation and a bypass installed around the gas washer or scrubber or other unit that requires the draft induction.

4.3.8.8.2 Suitable, normally open dampers shall be installed in the bypass to allow venting of combustion products in the event of power failure.

4.3.8.9 Expansion joints shall be provided as required.

4.4 Outdoor Incinerators. All outdoor incinerators shall conform with Chapter 4, depending on use.

Chapter 5 Waste and Linen Chutes and Transport Systems

5.1 General. Approved waste and linen chutes and transport systems, including gravity waste and linen chutes, full pneumatic waste or linen conveying systems, and gravity pneumatic waste or linen conveying systems, shall comply with the provisions of this chapter.

5.2* Gravity Waste or Linen Chutes.

5.2.1 General. General access gravity chutes shall be permitted to be supplied with unlocked doors and shall be permitted to be available to all occupants at all times.

5.2.1.1 Linen gravity chutes shall only be limited access chutes.

5.2.1.2 A limited access chute shall be provided with a key in either the chute intake door or the entry door into the service room and shall be installed so that it can be used only by authorized personnel.

5.2.1.3 A gravity waste or linen chute also shall be permitted to be used to interface with a pneumatic transport system.

5.2.2 Construction.

5.2.2.1 Chute Supports.

5.2.2.1.1 A steel or steel-jacketed refractory chute supported at intervals by the building structure shall be provided with expansion joints between support levels.

5.2.2.1.2 Other chutes shall be supported on a substantial noncombustible foundation.

5.2.2.2 Chute Offsets. See Figure 5.2.2.2.

5.2.2.2.1 Gravity metal chutes shall be constructed straight and plumb where allowed by the building configuration.

5.2.2.2.2 Gravity metal chutes shall be permitted to be offset a maximum of 15 degrees from plumb with the approval of the authority having jurisdiction.

5.2.2.2.3 Offsets shall be limited to a maximum of one offset for every two floors.

5.2.2.2.4 A single offset shall be completed (returned to vertical) between floors.

Copyright National Fire Protection Association
Provided by IHS under license with NFPA
No reproduction or networking permitted without license from IHS
Not for Resale

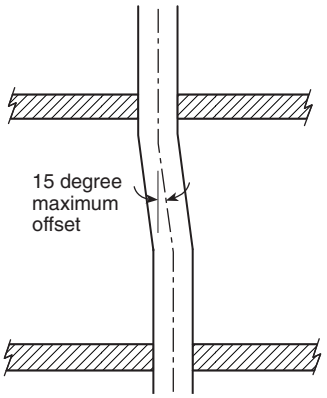

FIGURE 5.2.2.2 Gravity Metal Chute, Maximum Offset.

5.2.2.2.5 No access door shall be less than 1.2 m (4 ft) above an offset.

5.2.2.2.6 The portion of chute between the highest loading door and the chute termination shall be permitted to be offset a maximum of 45 degrees from the plumb, subject to the approval of the authority having jurisdiction.

5.2.2.2.7 For the purpose of this standard, a single chute offset from vertical shall include a return of the chute to vertical.

5.2.2.3 Standard Diameter of Waste and Linen Gravity Chutes. Standard gravity chutes shall be a minimum of 610 mm (24 in.) in diameter.

5.2.2.4 Chute Venting.

5.2.2.4.1 A waste or linen chute shall extend (full size) at least 0.92 m (3 ft) above the roof of a building of Type II-000, Type III, Type IV, or Type V construction. *(See NFPA 5000, Building Construction and Safety Code.)*

5.2.2.4.2 The chute shall be permitted to extend less than 0.92 m (3 ft) above the roof of a building of Type I, Type II-222, or Type II-111 construction subject to the approval of the authority having jurisdiction. *(See NFPA 5000.)*

5.2.2.4.3 The chute shall be open to the atmosphere, with the opening being the same cross-sectional area as the chute.

5.2.2.5 Masonry Waste Chutes.

5.2.2.5.1 Masonry waste chutes shall be constructed of clay or shale brickwork not less than 203 mm (8 in.) thick or of reinforced concrete not less than 152 mm (6 in.) thick. Such chutes shall be lined with low-duty refractory brick (as defined in ASTM C 27) not less than 114 mm (4½ in.) thick.

5.2.2.5.2 Equivalent construction with walls providing a 2 hour fire resistance rating with equivalent structural features shall be acceptable.

5.2.2.5.3 Lined masonry chutes that comply with 5.2.2.5 shall not require automatic sprinkler protection.

5.2.2.6 Lined Metal Waste Chutes.

5.2.2.6.1 Metal waste chutes shall be permitted to be lined with low-duty refractory brick (as defined in ASTM C 27) not less than 63.5 mm (2½ in.) thick or equivalent castable refractories.

5.2.2.6.2 Lined metal chutes that comply with 5.2.2.6.1 shall not require automatic sprinkler protection.

5.2.2.6.3 All unlined steel chutes shall be protected internally by automatic sprinklers. *(See 5.2.5.1.)*

5.2.2.7 Metal Chute Wall Thickness.

5.2.2.7.1 Metal waste or linen chutes shall be made of stainless steel, galvanized steel, or aluminum-coated steel with no screws, rivets, or other projections on the interior surface of the chute.

5.2.2.7.2 Laps or joints shall be designed so that liquid will drain to the interior of the chute.

5.2.2.7.3 The steel shall not be lighter than 16 U.S. gauge.

5.2.2.7.4 Special waste chutes designed to handle dense or heavy material over 1500 kg/m^3 (10 lb/ft^3) shall be made of steel not lighter than 14 U.S. gauge.

5.2.2.8 Medium-Heat Chimneys.

5.2.2.8.1 Listed medium-heat appliance chimney sections shall be acceptable for use as trash chutes.

5.2.2.8.2 Listed medium-heat chimney shall not require automatic sprinkler protection.

5.2.3 Chute Discharge Doors.

5.2.3.1 The bottom of a waste chute shall be protected by an approved automatic closing or self-closing door of construction that resists fire in accordance with 5.2.4.

5.2.3.2 The bottom of a linen chute shall be protected by a listed automatic closing or self-closing door in accordance with 5.2.4.

5.2.3.3 Chute discharge doors shall be permitted to be held open by a fusible link.

5.2.4 Chute Enclosure (Chase).

5.2.4.1 Vertical waste or linen chutes in all stories above the storage or compacting room shall be enclosed within a continuous fire-rated enclosure consistent with the construction type.

5.2.4.2 The walls of the enclosure shall have a fire resistance rating of not less than 2 hours if the building is four or more stories in height and not less than 1 hour if the building is less than four stories in height.

5.2.4.3 Openings in the fire-rated enclosure shall be as follows:

(1) 1½ hour fire resistance rating for 2 hour–rated enclosures
(2) 1 hour fire resistance rating for 1 hour–rated enclosures

5.2.5 Chute Loading Doors.

5.2.5.1 General Access Gravity Waste Chutes.

5.2.5.1.1 All chute loading doors into a waste chute shall be provided with a self-closing, positive latching frame and gasketed fire door assembly having a fire protection rating of not less than 1 hour.

5.2.5.1.2 The door frame shall be fastened into the chute and the shaft wall.

5.2.5.1.3 The design and installation shall be such that no part of the frame or door projects into the chute.

5.2.5.1.4 The area of each chute loading door shall be limited to one-third of the cross-sectional area of a square chute and 44 percent of the area of a round chute.

Copyright National Fire Protection Association
Provided by IHS under license with NFPA
No reproduction or networking permitted without license from IHS
Not for Resale

5.2.5.2 Limited-Access Gravity Chutes.

5.2.5.2.1 All chute loading doors into a linen or waste chute shall be provided with a self-closing, positive-latching frame and gasketed fire door assembly having a fire protection rating of not less than 1 hour.

5.2.5.2.2 The door frame shall be fastened into the chute and the shaft wall.

5.2.5.2.3 The design and installation shall be such that no part of the frame or door projects into the chute.

5.2.5.2.4 A key shall be required to open the door.

5.2.5.2.5 The area of each waste chute loading door shall be limited to two-thirds of the cross-sectional area of the chute.

5.2.5.2.6 The area of each linen chute loading door shall not exceed the cross-sectional area of the chute.

5.2.5.3 Service Opening Rooms.

5.2.5.3.1 Every service opening shall be in a room or compartment that is separated from the other parts of the building by walls, partitions, floors, and floor-ceiling assemblies having a fire resistance rating of not less than the required rating of the chute enclosure.

5.2.5.3.2 Openings into such a room or compartment shall be protected by approved self-closing doors that are appropriate for protecting the openings or not less than 1 hour partition rating with a ¾ hour door.

5.2.5.3.3 The size of the service opening room or compartment shall not be less than that required to maintain a minimum 152.4 mm (6 in.) clearance between the intake opening and the closed service opening room door.

5.2.5.4 Service Opening Room Key.

5.2.5.4.1 If entrance to a limited-access service opening is gained by key, the service opening door shall not require a key to be opened.

5.2.5.4.2 One opening or the other shall be keyed.

5.2.5.4.3 Keying shall be required only for limited-access installations.

5.2.6 Chute Automatic Sprinklers.

5.2.6.1 Gravity Chute.

5.2.6.1.1 Gravity chutes shall be protected internally by automatic sprinklers.

5.2.6.1.2 This protection requires that a sprinkler be installed at or above the top service opening of the chute.

5.2.6.1.3 Chute Sprinkler Protection. Automatic sprinklers installed in gravity chute service openings shall be recessed out of the chute area through which the material travels.

5.2.6.1.4 In addition, a sprinkler shall be installed within the chute at alternate floor levels in buildings over two stories in height, with a mandatory sprinkler located at the lowest service level.

5.2.6.1.5 Sprinkler system installation shall comply with NFPA 13.

5.2.7 Chute Discharge Rooms.

5.2.7.1 General.

5.2.7.1.1 Waste and linen chutes shall terminate or discharge directly into a room having a minimum fire resistance rating not less than that specified for the chute.

5.2.7.1.2 Openings to such rooms shall be protected by approved automatic closing or self-closing 1½ hour fire doors.

5.2.7.2 Chute Room Automatic Sprinklers. Automatic sprinklers shall be installed in chute terminal rooms.

5.2.7.3 Chute-to-Incinerator Interface. Trash gravity chutes shall not discharge directly into an incinerator.

5.3* Full Pneumatic Waste and Linen Conveying Systems.

5.3.1 General. A full pneumatic waste or linen transport system consists of full vacuum stations equipped with inner doors and a locked outer door, an air source at the top of the riser, an air inlet control damper, flanged riser piping, transport piping, collectors (receivers), and a fan and fan damper.

5.3.2 Construction.

5.3.2.1 General.

5.3.2.1.1 Full vacuum loading stations shall be a minimum of 508 mm (20 in.) in diameter, shall have an inner door that is under processor control, and shall not yield under system vacuum.

5.3.2.1.2 The outer (loading) door shall be provided with a gasketed, self-closing, positive-latching fire door and frame assembly with a fire protection rating of not less than 1 hour.

5.3.2.1.3 The door frame shall be fastened into the station and shall be flush with the rated shaft wall.

5.3.2.1.4 Minimum outer door size shall be 457 mm (18 in.) and shall be side hinged. Full vacuum stations shall be constructed from a minimum of 14 U.S. gauge stainless or galvanized steel.

5.3.2.2 Multibag Loading of Waste or Linen Systems.

5.3.2.2.1 During the multibag loading procedure, both the outer and the inner doors shall be permitted to be open.

5.3.2.2.2 Only one inner door shall be open at a time.

5.3.2.3 Service Loading Rooms.

5.3.2.3.1 Every loading station door shall be in a room or compartment that is separated from other parts of the building by walls, partitions, floors, and floor-ceiling assemblies having a fire resistance rating of not less than 1 hour.

5.3.2.3.2 Openings into such a room or compartment shall be protected by approved self-closing fire doors with a fire protection rating of not less than ¾ hour.

5.3.2.4 Riser Pipe.

5.3.2.4.1 Full pneumatic riser pipe shall have a minimum diameter of 508 mm (20 in.) and shall be constructed from 16 U.S. gauge (minimum) stainless steel or galvanized or aluminum coated steel, with no screws, rivets, or other projections on the interior surface of the pipe.

5.3.2.4.2 To avoid vacuum leaks, riser pipe shall be flanged, gasketed, and bolted.

5.3.2.5 Air Source.

5.3.2.5.1 A full pneumatic system requires a full-diameter air source for conveying materials on a moving air stream.

5.3.2.5.2 The air source shall be a roof vent and curb, an all-weather elbow, or a louver through the side of the building.

--`,,,-`-`,,`,,`,`,,`---

Copyright National Fire Protection Association
Provided by IHS under license with NFPA
No reproduction or networking permitted without license from IHS
Not for Resale

5.3.2.6 Full Vacuum Station Supports.

5.3.2.6.1 Full vacuum stations shall be supported at each floor by mounting plates or a steel channel that will bridge the shaft opening.

5.3.2.6.2 Stations shall be bolted to prevent movement under transport conditions.

5.3.2.6.3 On floors where no station is installed, the riser pipe shall be supported at each floor.

5.3.2.7 Riser Offsets. Full pneumatic risers shall be permitted to be offset to fit building design requirements.

5.3.3 Riser Enclosure (Chase).

5.3.3.1 General.

5.3.3.1.1 Full pneumatic stations and vertical risers shall be mounted within a continuous enclosure constructed of materials that are noncombustible and that extend from floor to floor.

5.3.3.1.2 The walls of the enclosure shall have a fire resistance rating of not less than 1 hour if the building is less than four stories in height and not less than 2 hours if the building is four or more stories in height. *(See 5.3.2.7 for offsets in full pneumatic riser piping.)*

5.3.3.2 Loading Doors.

5.3.3.2.1 All full vacuum loading station outer doors shall be provided with a gasketed, self-closing, positive-latching fire door and frame assembly with a fire protection rating of not less than 1 hour.

5.3.3.2.2 The door frame shall be installed onto the station and shall be set flush to the shaft wall.

5.3.3.2.3 The width of the opening shall be permitted to be equivalent to the internal diameter of the chute, and the height shall be a maximum of one and a half times the diameter.

5.3.3.2.4 Minimum door size for a waste or linen loading door shall be 457 mm (18 in.) and shall be side hinged.

5.3.4 Automatic Sprinklers Systems. See Figure A.5.3(a).

5.3.4.1 Full pneumatic-type risers shall be protected internally by automatic sprinklers.

5.3.4.2 A sprinkler shall be required at or above the top loading station and at alternate floor levels in buildings over two stories in height, with a mandatory sprinkler located at the lowest loading station.

5.3.4.3 Sprinklers shall be recessed out of the station area through which the material travels.

5.3.4.4 Sprinkler system installation shall comply with NFPA 13.

5.3.5 Transport Piping.

5.3.5.1 Transport Piping Size and Thickness.

5.3.5.1.1 Transport piping shall have a minimum wall thickness of 16 U.S. gauge galvanized or stainless steel and shall be sized to fit the system's needs.

5.3.5.1.2 Waste and linen transport systems shall be a minimum of 406 mm (16 in.) in diameter.

5.3.5.1.3 Where all materials entering the pneumatic-powered system are processed through a shredder, the transport pipe shall be permitted to be less than 406 mm (16 in.) in accordance with the authority having jurisdiction.

5.3.5.2 Penetrating Fire-Rated Walls.

5.3.5.2.1 Automatic fire dampers shall be installed at all points where the waste or linen transport system penetrates fire-resistive partitions or floor assemblies. *[See Figure 5.3.5.2.1(a) through Figure 5.3.5.2.1(c).]*

5.3.5.2.2 The system shall shut down automatically upon the closing of one of the fire dampers.

5.3.5.2.3* Fire dampers shall not be required where an engineered alternative system is provided that is acceptable to the authority having jurisdiction.

5.3.5.3 Exiting from 2 Hour Fire-Rated Shafts.

5.3.5.3.1 Where the pneumatic transport pipe exits a 2 hour fire-rated shaft, the pipe wall thickness shall be increased to 11 U.S. gauge from within the shaft to four pipe diameters beyond the shaft wall.

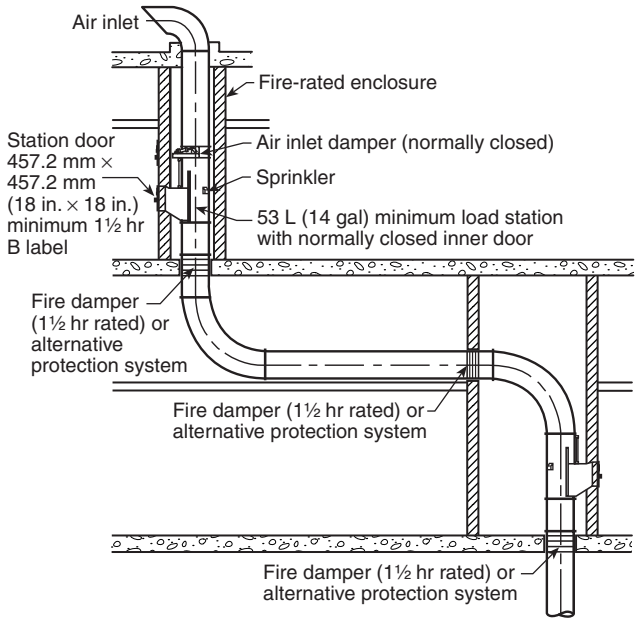

FIGURE 5.3.5.2.1(a) Full Pneumatic Riser with Offset.

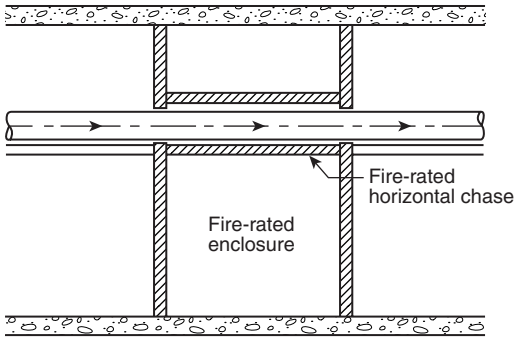

FIGURE 5.3.5.2.1(b) Full Pneumatic System with Penetration of an Evacuation Corridor.

Copyright National Fire Protection Association
Provided by IHS under license with NFPA
No reproduction or networking permitted without license from IHS
Not for Resale

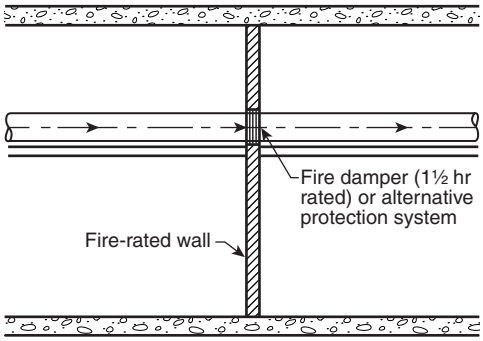

FIGURE 5.3.5.2.1(c) Full Pneumatic System with Penetration of a 2 Hour Fire-Rated Wall.

5.3.5.3.2 The 11 U.S. gauge pipe shall be supported at 0.92 m (3 ft) intervals.

5.3.6 Collector Discharge Area.

5.3.6.1 The room or area where the collector discharges waste or linen shall be separated from the occupied part of the building by a 2 hour fire-rated wall.

5.3.6.2 The room or area shall be protected by a sprinkler system. Sprinkler system installation shall comply with NFPA 13, *Standard for the Installation of Sprinkler Systems.*

5.4* Gravity Pneumatic Trash or Linen Conveying System.

5.4.1 General. A gravity pneumatic transport system shall comply with requirements of Section 5.4.

5.4.2 Construction.

5.4.2.1 General. All the requirements of Section 5.2 shall apply to gravity pneumatic conveying systems.

5.4.2.2 Dampers.

5.4.2.2.1 Where an open funnel is employed as an interface between the gravity chute storage section and the transport discharge damper, a normally closed, specially designed 11 U.S. gauge, blade-type damper shall be installed at the bottom of the chute and above the funnel opening.

5.4.2.2.2 At the point of entry into the transport piping tee, a material discharge damper shall be required to close off the transport piping when that riser is not being sequenced.

5.4.2.3 Chute Automatic Sprinklers. Where material is to be stored at the bottom of the chute and above the riser discharge damper (above the transport tee), automatic sprinklers shall be installed below the last service door on the chute.

5.4.2.4 Discharge Room Criteria.

5.4.2.4.1 Where a gravity pneumatic system has any opening in the connection between the chute and the transport pipe, the interface and the discharge damper shall be in a room that is separated from other parts of the building by walls, partitions, and floor-ceiling assemblies having a minimum fire resistance rating not less than that specified for the chute.

5.4.2.4.2 Openings to such rooms shall be protected by approved automatic closing or self-closing 1½ hour fire doors.

5.4.2.4.3 Automatic sprinklers shall be installed in chute discharge rooms.

5.4.3 Transport Piping.

5.4.3.1 Piping Size and Thickness.

5.4.3.1.1 Transport piping shall have a minimum wall thickness of 16 U.S. gauge galvanized or stainless steel and shall be sized to fit the system's needs.

5.4.3.1.2 Waste and linen transport systems shall be a minimum of 406 mm (16 in.) in diameter.

5.4.3.1.3 Where all materials entering the pneumatic-powered system are processed through a shredder, the transport pipe shall be permitted to be less than 16 in. (406 mm) in accordance with the authority having jurisdiction.

5.4.3.2 Penetrating of Fire-Rated Walls.

5.4.3.2.1 Automatic fire dampers shall be installed at all points where the waste or linen transport system penetrates fire-resistive partitions or floor assemblies.

5.4.3.2.2 The system shall shut down automatically upon the closing of one of the fire dampers.

5.4.3.3 Exiting from 2 Hour Fire-Rated Shafts.

5.4.3.3.1 Where the pneumatic transport pipe exits a 2 hour fire-rated shaft, the pipe wall thickness shall be increased to 11 U.S. gauge from within the shaft to four pipe diameters beyond the shaft wall.

5.4.3.3.2 The 11 U.S. gauge pipe shall be supported at 0.92 m (3 ft) intervals.

5.4.4 Gravity Pneumatic Collector Discharge Area.

5.4.4.1 The room or area where the collector discharges waste or linen shall be separated from the occupied part of the building by a 2 hour fire-rated wall.

5.4.4.2 Where the room or area of collector discharge is within or abutting an occupied building, the room or area shall be protected by a sprinkler system.

5.4.4.3 Sprinkler system installation shall comply with NFPA 13, *Standard for the Installation of Sprinkler Systems.*

Chapter 6 Other Waste Handling Systems

6.1 General. Waste handling systems and equipment, other than chute systems covered in Chapter 5, including, but not limited to, waste cart transport systems, skip hoists, cranes and grapples, and various types of conveyors, such as belt conveyors, pan conveyors, screw conveyors, vibratory conveyors, and drag conveyors, shall comply with this chapter.

6.2 Waste Spillage Control. Waste handling systems and equipment shall be designed and constructed to prevent or minimize waste spillage so as to prevent potential fire problems.

6.3 Enclosure Requirements.

6.3.1 The building, rooms, or enclosures in which waste handling systems and equipment are located and used for either interim storage of waste materials or the direct movement of waste from storage areas to processing equipment, such as incinerators, or both, shall be shut off from other areas of the building by walls, floor, and ceiling assemblies having a fire resistance rating of not less than 2 hours.

Copyright National Fire Protection Association
Provided by IHS under license with NFPA
No reproduction or networking permitted without license from IHS
Not for Resale

6.3.2 Openings to such rooms shall be protected by approved automatic closing or self-closing fire doors with a fire protection rating of not less than 1½ hours.

6.4 Automatic Sprinklers.

6.4.1 Automatic sprinklers shall be installed in rooms where waste handling systems and equipment are used to transport waste from interim storage areas to waste processing equipment, such as incinerators.

6.4.2 In locations or rooms where waste handling systems and equipment are used for interim storage of waste only, the rooms shall be sprinklered in accordance with requirements specified in Chapter 7.

Chapter 7 Waste Compactors

7.1 General. Compactors shall be regulated by the provisions of this chapter.

7.2 Automatic Sprinklers.

7.2.1 All chute-fed compactors shall have an automatic special fine-water spray sprinkler with a minimum 13 mm (½ in.) orifice installed in the hopper of the compactor.

7.2.1.1 Sprinklers shall be ordinary temperature-rated sprinklers.

7.2.1.2 Sprinklers shall be supplied by a minimum 25.4 mm (1 in.) ferrous piping or 19 mm (¾ in.) copper tubing line from the domestic cold water supply.

7.2.1.3 The sprinkler shall provide a suitable spray into the hopper.

7.2.1.4 A cycling (on-off), self-actuating, snap-action, heat-actuated sprinkler shall be permitted to be used, or the sprinkler shall be permitted to be controlled by a temperature sensor operating a solenoid valve.

7.2.1.5 Sprinkler water piping shall be protected from freezing in outdoor installations.

7.2.2 Hand-fed compactors located within a building and not operated in conjunction with a chute shall not require installation of an automatic sprinkler in the hopper.

7.2.2.1 Compactors with charging capacities greater than 0.76 m^3 (1 yd^3) shall be enclosed in a fire-rated room in conformance with 7.2.4.

7.2.3 Self-contained and breakaway compactors shall have an access door to the containers that can be opened without disconnecting the containers from the compactor or shall be provided with one 63.5 mm (2½ in.) hose connection that fits standard fire-fighting equipment near the top of the container.

7.2.4 Chute terminal, compacting, or storage rooms shall be separated from other parts of the building by walls, partitions, floor, and floor-ceiling assemblies having a fire resistance rating of not less than 2 hours.

7.2.4.1 Openings to such rooms shall be protected by approved automatic-closing or self-closing fire doors with a fire protection rating of not less than 1½ hours.

Chapter 8 Waste Storage Rooms

8.1 General. Waste storage rooms in a building or structure shall comply with this chapter if they are used for storage or handling of waste with a combined total exceeding 0.765 m^3 (1 yd^3) uncompacted measure of waste.

8.2 Fire Separation.

8.2.1 Waste storage rooms shall be separated from other parts of the building by walls and floor-ceiling assemblies having a fire resistance rating of not less than 2 hours.

8.2.2 Openings to such rooms shall be protected by approved automatic closing or self-closing fire doors with a fire protection rating of not less than 1½ hours.

8.3 Automatic Sprinklers. Waste storage rooms shall be provided with automatic sprinklers installed in accordance with NFPA 13, *Standard for the Installation of Sprinkler Systems.*

Chapter 9 Other Waste Processing Equipment

9.1 General. Other waste processing equipment shall include such devices as shredders, granulators, grinders, pulpers, and chippers.

9.2 Fire Separation.

9.2.1 Rooms in which waste processing systems and equipment are located shall be separated from other parts of the building by walls, floor, and ceiling assemblies having a fire resistance rating of not less than 2 hours.

9.2.2 Openings to such rooms shall be protected by automatic closing or self-closing fire doors with a fire protection rating of not less than 1½ hours.

9.3 Explosion Protection. Devices that granulate waste materials and that produce potentially explosive aerosols or combustible air mixtures shall be equipped with explosion protection devices or systems.

9.4 Automatic Sprinklers.

9.4.1 Rooms in which waste processing equipment is located shall be installed with automatic sprinklers.

9.4.2 Sprinkler system installation shall be in accordance with NFPA 13, *Standard for the Installation of Sprinkler Systems.*

Annex A Explanatory Material

Annex A is not a part of the requirements of this NFPA document but is included for informational purposes only. This annex contains explanatory material, numbered to correspond with the applicable text paragraphs.

A.1.3 It is recognized that there are many different incineration technologies and designs. There also is a wide variation in the types of waste that can be incinerated, including solids, liquids, sludges, and fumes. This standard is not intended to cover or include all the design and construction details for each incineration technology and application. However, all design, construction, control, and other features needed to reduce or minimize fire hazards shall be required for all new incineration facilities to satisfy the authority having jurisdiction.

Copyright National Fire Protection Association
Provided by IHS under license with NFPA
No reproduction or networking permitted without license from IHS
Not for Resale

It is recognized that many different types of systems, equipment, and components are utilized for handling or transporting waste. This standard is not intended to cover or include all the design and construction details for each waste handling system and application. However, all design, construction, control, and other features needed to reduce or minimize fire hazards shall be required for such systems to satisfy the authority having jurisdiction and to comply with other applicable standards.

A.3.1 Other definitions relating to this standard are contained in NFPA 97, *Standard Glossary of Terms Relating to Chimneys, Vents, and Heat-Producing Appliances*.

A.3.2.1 Approved. The National Fire Protection Association does not approve, inspect, or certify any installations, procedures, equipment, or materials; nor does it approve or evaluate testing laboratories. In determining the acceptability of installations, procedures, equipment, or materials, the authority having jurisdiction may base acceptance on compliance with NFPA or other appropriate standards. In the absence of such standards, said authority may require evidence of proper installation, procedure, or use. The authority having jurisdiction may also refer to the listings or labeling practices of an organization that is concerned with product evaluations and is thus in a position to determine compliance with appropriate standards for the current production of listed items.

A.3.2.2 Authority Having Jurisdiction (AHJ). The phrase "authority having jurisdiction," or its acronym AHJ, is used in NFPA documents in a broad manner, since jurisdictions and approval agencies vary, as do their responsibilities. Where public safety is primary, the authority having jurisdiction may be a federal, state, local, or other regional department or individual such as a fire chief; fire marshal; chief of a fire prevention bureau, labor department, or health department; building official; electrical inspector; or others having statutory authority. For insurance purposes, an insurance inspection department, rating bureau, or other insurance company representative may be the authority having jurisdiction. In many circumstances, the property owner or his or her designated agent assumes the role of the authority having jurisdiction; at government installations, the commanding officer or departmental official may be the authority having jurisdiction.

A.3.2.4 Listed. The means for identifying listed equipment may vary for each organization concerned with product evaluation; some organizations do not recognize equipment as listed unless it is also labeled. The authority having jurisdiction should utilize the system employed by the listing organization to identify a listed product.

A.3.3.2 Gravity Waste or Linen Chutes. A gravity chute also can be used to interface with a pneumatic transport system. Access of chute intake doors might or might not be limited to the use of keys.

A.3.3.3 Incinerator. The most applicable systems under this definition include, but are not limited to, controlled air systems, rotary kiln systems, and multiple-chamber–type incineration systems.

A.3.3.4 Limited Combustible. See NFPA 259 and NFPA 220.

A.4.3 The changing composition of waste and regulations controlling temperatures and emissions have created very aggressive flue gases. Refractories that were suitable in the past can fail rapidly under existing conditions. There is no single material or family of materials suitable for ensuring fire safety under all conditions; therefore, no specific materials are identified in this annex. Critical temperatures, aggressive chemical components, and conditions creating aggressive flue gases are identified. Selection of materials for chimney construction should be based on those capable of withstanding these conditions.

Condensed Flue Acid Corrosives. Hydrochloric acid is formed when chloride-bearing materials are oxidized. Hydrochloric acid is corrosive to all chimney linings and can destroy most metals in concentrations as low as 26 ppm in flue gases. Acid concentration in flue gases ranges from 26 ppm to as high as 2095 ppm.

The acid dew point is about 62.7°C (145°F).

Sulfuric acid is formed when sulfur is oxidized to SO_2, which is further oxidized to SO_3, which combines readily with water to form sulfuric acid, H_2SO_4. This flue acid is aggressive to most chimney linings.

The acid dew point depends on the SO_3 content of the flue gases. The maximum theoretical acid dew point is about 204.4°C (400°F). Acid concentration can be as high as 80 percent but will rapidly self-dilute to 35 percent.

Sulfurous acid is formed when SO_2 combines with water. It condenses as sulfurous acid, H_2SO_3, at the water dew point, or about 54.4°C (130°F), but it is not as aggressive as sulfuric or hydrochloric acid and, therefore, does less damage.

Nitric acid is condensed in the water dew point area and also is not as aggressive to chimney materials as other flue acids. It pacifies the surface of stainless steel, reducing the corrosive effect of the other flue acids.

Miscellaneous Flue Acids. Other flue acids, formed by the halides, are very corrosive, but in lesser amounts than chlorides. Hydrochloric acid is, therefore, the controlling acid.

Other flue acids that condense at the water dew point are present; however, hydrochloric and sulfuric acids are the acids that cause the most corrosion in chimneys servicing incineration of general waste.

Alkali Corrosives. Alkalis are formed by the oxidation of metal oxides that are found in paints, ink, fillers, pigments, and so forth. The common alkalis are as follows:

(1) Soda (Na_2O)
(2) Potash (K_2O)
(3) Lithia (Li_2O)

Increases in the quantities of plastics that are components of waste increase alkali in flue gases.

Alkalis form low-temperature melts that distress refractories, particularly those of low density. Distress due to alkali attack can be observed as glazing or dripping of the refractory if the temperature is high enough or, at lower temperatures, as a shelling or disintegration of the surface.

Alkali disruption begins at about 871°C (1600°F) and increases as temperatures approach 1093°C (2000°F).

High-Temperature Acid Corrosives. Most common stainless steels show significant loss due to chloride or other halogen vapors in flue gases when temperatures exceed 315°C (600°F).

Flue temperatures over 982°C (1800°F) encourage reaction of hydrochloric vapors with calcium aluminate refractory binders. This reaction becomes more severe as temperatures approach and exceed 1204°C (2200°F).

Free Chlorides and Alkalis. Where free chlorides are present with alkalis, these compounds can condense within the lining, forming expansive alkali chloride phases. The presence of these phases can result in cracking of the refractory.

Copyright National Fire Protection Association
Provided by IHS under license with NFPA
No reproduction or networking permitted without license from IHS
Not for Resale

Chimney Systems Below 93.3°C (200°F) Mid-Flue Temperature Downstream of Scrubber. Chimney systems that allow flue surfaces to fall below 93.3°C (200°F) are subject to corrosion by halogen acids, nitric acid, and others, with the prime corrosive acid being hydrochloric acid.

Metal Linings Assuming HCl Content to Be 26 ppm or Above in the Flue Gases. Most common metals, such as Types 304, 304L, 316, and 316L stainless steels, and nickel-based alloys, such as 800, 600, 618, and 671, have shown significant corrosion when subjected to flue gases containing 26 ppm hydrochloric acid and are not acceptable as flue liners.

Materials that exhibit essentially no corrosion attack when subjected to flue gases containing 26 ppm hydrochloric acid are as follows:

(1) Austenitic stainless steels: 904L, 254 SLX, 254 SMO, AL-6X, and 22-13-5
(2) Ferritic stainless steels: Ebrite 26-1, NuMonit, and 29-4C
(3) Nickel-based alloys: 690, 625, 825, and Hastelloys N, F, G, and C-276

This information was obtained from *Technology Development for Corrosion Resistant Condensing Heat Exchangers* by Battelle, Columbus, OH.

Refractory and Other Linings. Refractory linings suitable for use downstream of scrubbers need to resist all of the condensed flue acids at low temperatures. The linings will become saturated and, therefore, need to resist stresses of expanding steam when temperatures elevate rapidly. They also need to resist thermal shock when heated refractory is suddenly exposed to water.

Products suitable for this service should show evidence of no more than 3 percent weight loss when subjected to ASTM C 980, *Acid Resistance Testing*, in boiling hydrochloric and sulfuric acids.

Chimney Systems Below 315.8°C (600°F) Mid-Flue Temperature. Chimney systems that allow flue surfaces in any portion of the system to fall below 315.8°C (600°F) can be subject to corrosion by sulfuric acid. These temperatures usually are associated with waste heat recovery boilers.

Lining suitable for this type of service should be dense, high in silica, and bonded with acid-resistant binders (calcium aluminate binders cannot pass the acid-resistant test unless co-bonded with potassium silicate). Material should withstand immersion in 5 percent sulfuric acid for 2000 hours at 21.1°C (70°F) with not more than 3 percent weight loss.

Chimney Systems 315.8°C to 815.6°C (600°F to 1500°F). These conditions existed prior to current regulations for incineration. This temperature range avoids condensed flue acid and problems with alkali. Refractories used in the past usually were lightweight with continuous service temperatures of 982.2°C (1800°F) with excursions to 1093.3°C (2000°F).

Listed Medium-Heat Chimneys. Listed medium-heat appliance chimneys can be used and should be installed in accordance with the conditions of the listing and the manufacturer's instructions.

Chimney Systems 815.6°C to 1204.4°C (1500°F to 2200°F). This temperature range requires more Al_2O_3 and less SiO_2 in the chemical composition. The material needs to meet the temperature limitations of the specific incinerator involved. It is subject to attack by both alkali and acid vapors, which become more severe as density is reduced; thus, high-density low-porosity material should be used.

A.4.3.3.3.2 Equivalent thickness is that thickness capable of providing the same insulating and structural values to limit skin temperatures to those temperatures specified in 4.2.2.5 under all intended operating conditions.

A.4.3.3.4.3 Equivalent thickness is that thickness capable of providing the same insulating and structural values to limit skin temperatures to those temperatures specified in 4.2.2.5 under all intended operating conditions.

A.4.3.6 Such materials can include fiberglass reinforced plastic (FRP), refractories, and mortars of special acid-resistant composition or specialized metals, such as Hastelloy or Inconel. *(See A.4.3 for further discussion.)*

A.4.3.8.7 This requirement was initiated to avoid the serious corrosion problems inherent with low-temperature incinerator flue gases. It also provides the high-temperature protection necessary when the special equipment is bypassed for any purpose, including power failure. In those cases where the bypass is such that the breaching also is bypassed, then the breaching need not be high-temperature protected, but it should be protected by an acid-resistant coating suitable for the operating conditions.

A.5.2 See Figure A.5.2(a) and Figure A.5.2(b) for examples of gravity chutes.

A.5.3 Figure A.5.3(a) is an example of a full pneumatic system, and Figure A.5.3(b) through Figure A.5.3(e) are examples of engineered alternative systems.

A.5.3.5.2.3 Examples of engineered alternative systems are shown in Figure A.5.3(b) through Figure A.5.3(e). Other engineered alternative systems are acceptable if approved by the authority having jurisdiction.

A.5.4 Figure A.5.4 is an example of various gravity pneumatic system arrangements.

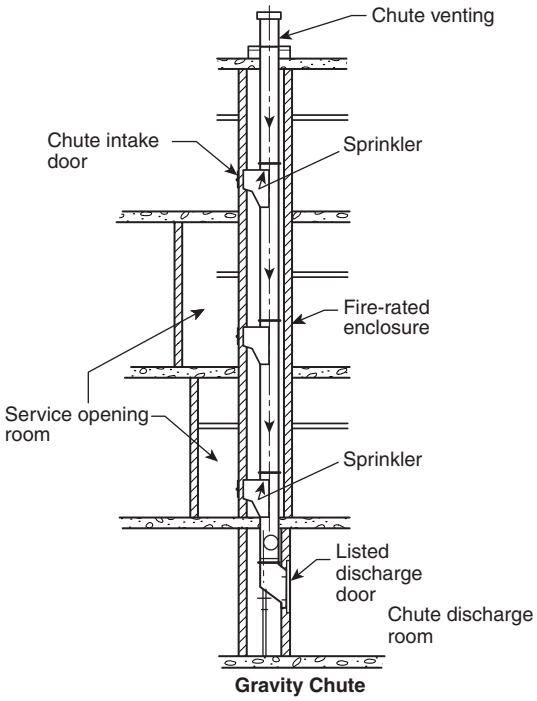

FIGURE A.5.2(a) Gravity Linen Chute.

Copyright National Fire Protection Association
Provided by IHS under license with NFPA
No reproduction or networking permitted without license from IHS
Not for Resale

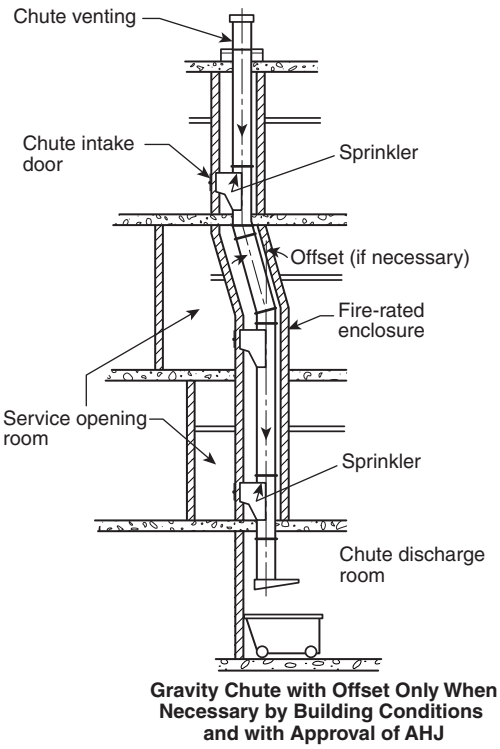

FIGURE A.5.2(b) Gravity Waste Chute.

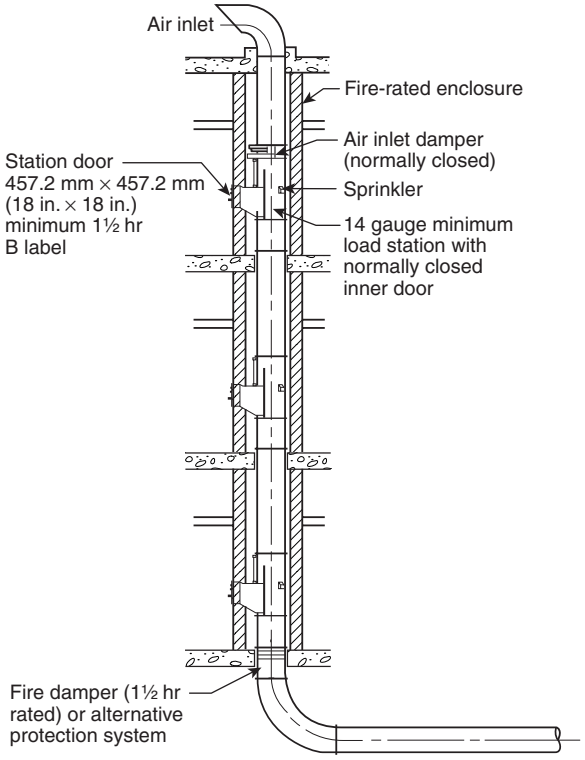

FIGURE A.5.3(a) Full Pneumatic System.

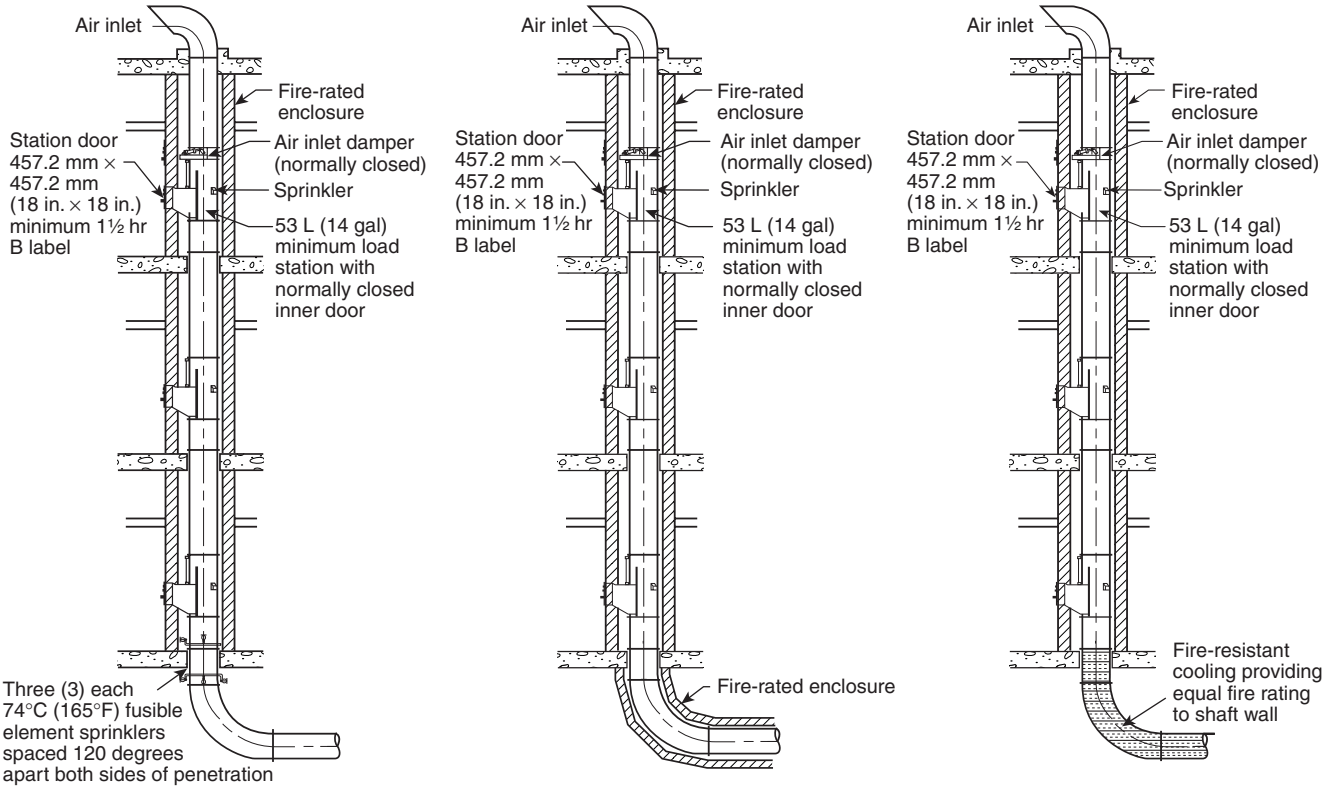

FIGURE A.5.3(b) Fire Damper Engineering Alternative for Penetration of Floor at Base of Shaft.

Copyright National Fire Protection Association
Provided by IHS under license with NFPA
No reproduction or networking permitted without license from IHS
Not for Resale

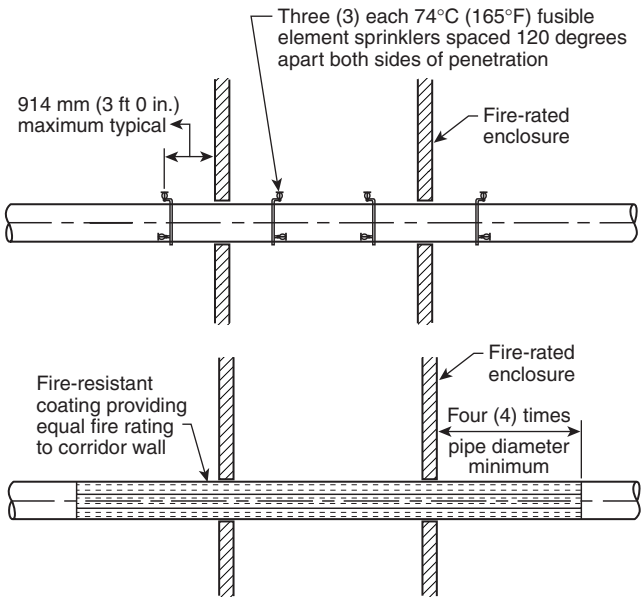

FIGURE A.5.3(c) Fire Damper Engineering Alternative for Penetration of Fire-Rated Enclosure.

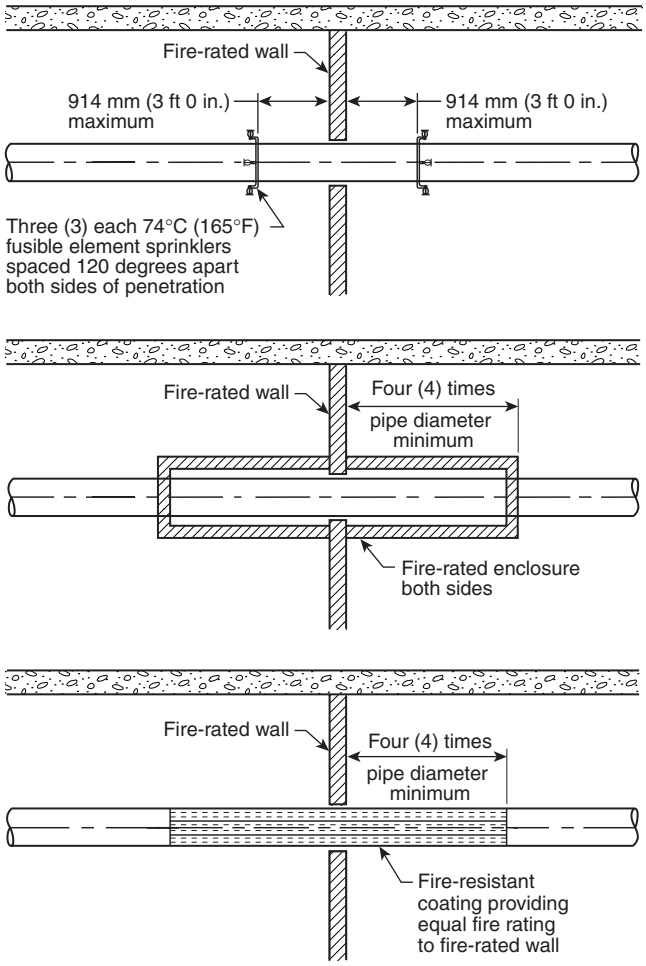

FIGURE A.5.3(d) Fire Damper Engineering Alternative for Penetration of Fire-Rated Wall.

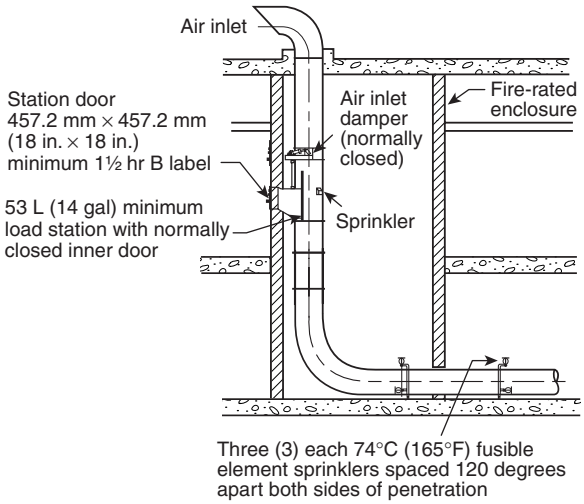

FIGURE A.5.3(e) Fire Damper Engineering Alternative for Penetration of Wall at Base of Shaft.

Copyright National Fire Protection Association
Provided by IHS under license with NFPA
No reproduction or networking permitted without license from IHS
Not for Resale

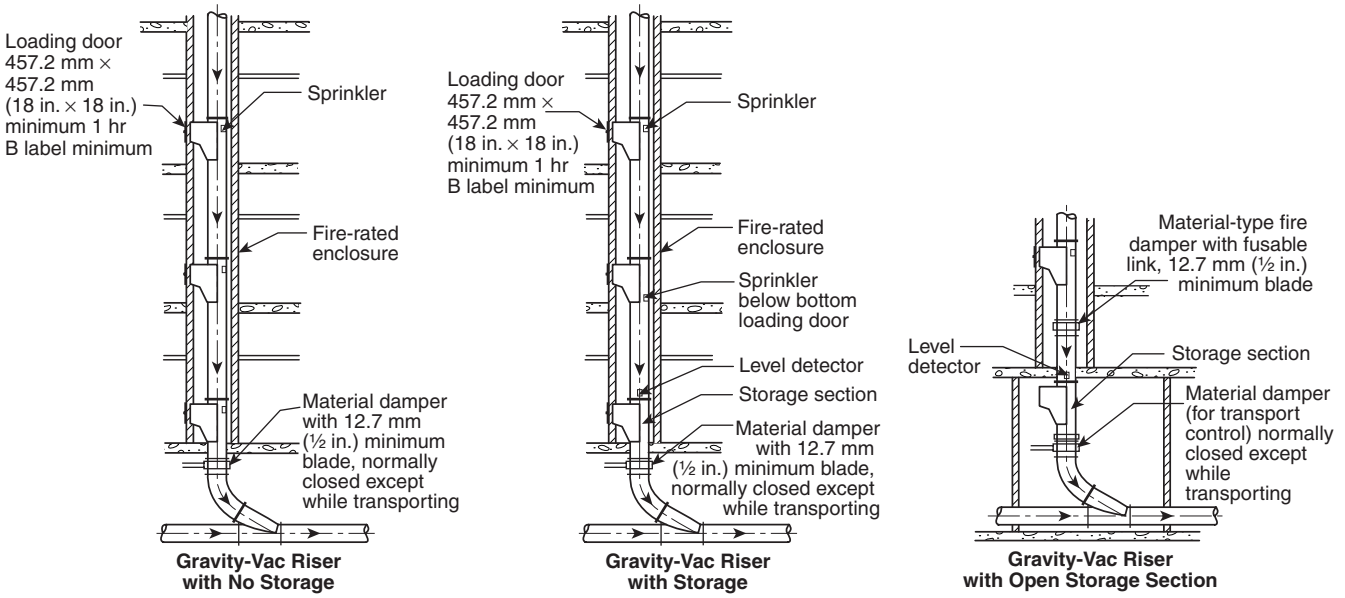

FIGURE A.5.4 Gravity Pneumatic System.

Annex B Informational References

B.1 Referenced Publications. The following documents or portions thereof are referenced within this standard for informational purposes only and are thus not part of the requirements of this document unless also listed in Chapter 2.

B.1.1 NFPA Publications. National Fire Protection Association, 1 Batterymarch Park, Quincy, MA 02169-7471.

NFPA 97, *Standard Glossary of Terms Relating to Chimneys, Vents, and Heat-Producing Appliances*, 2003 edition.

NFPA 220, *Standard on Types of Building Construction*, 2001 edition.

NFPA 259, *Standard Test Method for Potential Heat of Building Materials*, 2001 edition.

B.1.2 Other Publications.

B.1.2.1 ASTM Publication. American Society for Testing and Materials, 100 Barr Harbor Drive, West Conshohocken, PA 19428-2959.

ASTM C 980, *Acid Resistance Testing*, 1995.

B.1.2.2 Technology Development for Corrosion Resistant Condensing Heat Exchangers, Battelle, Columbus, OH.

B.2 Informational References. (Reserved)

B.3 References for Extracts. The following documents are listed here to provide reference information, including title and edition, for extracts given throughout this standard as indicated by a reference in brackets [ ] following a section or paragraph. These documents are not a part of the requirements of this document unless also listed in Chapter 2 for other reasons.

NFPA 33, *Standard for Spray Application Using Flammable or Combustible Materials*, 2000 edition.

Copyright National Fire Protection Association
Provided by IHS under license with NFPA
No reproduction or networking permitted without license from IHS
Not for Resale

Index

© 2004 National Fire Protection Association. All Rights Reserved.

The copyright in this index is separate and distinct from the copyright in the document that it indexes. The licensing provisions set forth for the document are not applicable to this index. This index may not be reproduced in whole or in part by any means without the express written permission of NFPA.

-A-

Acid dew point A.4.3
Acids, flue 4.3.6, A.4.3, A.4.3.6
Air supply
Combustion/ventilation 4.1.3
Full pneumatic waste/linen conveying systems 5.3.2.5
Alkali corrosives A.4.3
Application of standard 1.3, A.1.3
Approved (definition) 3.2.1, A.3.2.1
Authority having jurisdiction (AHJ) (definition) 3.2.2, A.3.2.2
Auxiliary fuel, provisions for 4.1.1

-B-

Batch loading 4.2.5.2
Breachings 4.3.1.10, 4.3.1.11, 4.3.6, 4.3.8, A.4.3.6, A.4.3.8.7

-C-

Charging, incinerator 4.2.5
Charging rooms ..... 4.2.5.3 to 4.2.5.6
Chases
Chute enclosure 5.2.4
Riser enclosure 5.3.3
Chimneys ..... 4.3, A.4.3; *see also* Breachings; Listed medium-heat chimneys; Masonry chimneys; Metal chimneys
Clearances 4.3.5
Connectors 4.3.8, A.4.3.8.7
Factory-built 4.3.1.7
Low-temperature 4.3.6, A.4.3.6
Termination 4.3.7
Chlorides, free A.4.3
Chutes ..... *see also* Waste or linen chutes, gravity
Charging 4.2.5.3, 4.2.5.4
Cleanout openings
Chimneys 4.3.1.8
Incinerators ..... 4.2.1.1(10), 4.2.1.1(11), 4.2.4.7, 4.2.6
Combustible (definition) 3.3.1
Combustible material
Clearance to 4.2.4.1, 4.2.4.2, 4.2.4.5
Metal chimney location near 4.3.5.4.1, 4.3.5.4.3
Combustion, air supply for 4.1.3
Compactors ..... *see* Waste compactors
Condensed flue acid corrosives A.4.3
Connectors, chimney 4.3.8, A.4.3.8.7
Corrosion resistant chimneys and breachings 4.3.6, A.4.3, A.4.3.6
Corrosives A.4.3

-D-

Dampers
Chimney connector 4.3.8.8.2
Full pneumatic waste and linen conveying systems ..... 5.3.5.2.1 to 5.3.5.2.3
Gravity pneumatic conveying system ... 5.4.2.2, 5.4.3.2.1, 5.4.3.2.2
Incinerator 4.2.4.8
Definitions ..... Chap. 3
Doors ..... *see also* Fire doors
Incinerators 4.2.1.4, 4.2.4.7, 4.2.5.6, 4.2.7.2
Waste compactors 7.2.3, 7.2.4.1
Waste handling enclosures 6.3.2
Waste or linen chutes and transport systems
Chute discharge doors 5.2.3
Chute discharge rooms 5.2.7.1.2
Full pneumatic waste and linen conveying systems ..... 5.3.1, 5.3.2.1 to 5.3.2.3, 5.3.3.2
Gravity pneumatic conveying system discharge room 5.4.2.4.2
Limited access chutes and service rooms, keys for 5.2.1.2
Loading doors 5.2.5
Waste processing equipment, rooms for 8.2.2
Waste storage rooms 8.2.2
Drains, chimneys 4.3.1.9
Ducts, air ..... 4.1.3.3 to 4.1.3.5

-E-

Electrical supply 4.1.2
Emission control systems 4.1.4.1
Equivalency to standard 1.5
Explosion protection 9.3
Explosion relief devices 4.2.2
Exterior metal chimneys, clearances 4.3.5.3

-F-

Factory-built chimneys 4.3.1.7
Fire doors, self-closing/automatic closing
Incinerator rooms 4.2.5.6, 4.2.7.2
Waste compactors, rooms for 7.2.4.1
Waste handling enclosures 6.3.2
Waste or linen chutes and transport systems
Chute discharge doors 5.2.3
Chute discharge room 5.2.7.1.2
Chute loading doors 5.2.5.1.1, 5.2.5.2.1
Full pneumatic waste/linen stations 5.3.2.1.2, 5.3.3.2.1
Gravity pneumatic discharge room 5.4.2.4.2
Service loading rooms 5.3.2.3.2
Service opening rooms 5.2.5.3.2
Waste chutes 5.2.3.2, 5.2.3.21
Waste processing equipment, rooms for 9.2.2
Waste storage rooms 8.2
Fire separation
Incinerator rooms 4.2.7.1
Waste compactors, rooms for 7.2.4
Waste or linen chutes and transport systems
Full pneumatic collector discharge area 5.3.6.1
Gravity chute service opening rooms 5.2.5.3.1
Gravity pneumatic collector discharge area 5.4.4.1
Service loading rooms 5.3.2.3.1
Waste processing equipment, rooms for 9.2
Waste storage rooms 8.2.1
Floors, incinerator parts used as 4.2.1.2
Flue acids 4.3.6, A.4.3, A.4.3.6
Flue gas 4.3.6, 4.3.8.7, A.4.3
Fly ash emissions 4.1.4.1
Free chlorides and alkalis A.4.3
Fuel burners, safety controls 4.1.1.3
Full pneumatic waste/linen systems ..... *see* Waste or linen conveying systems

-G-

Gas-burning installations 4.1.1.1, 4.1.1.3
Gas washers 4.3.8.8
General access gravity waste chutes 5.2.5.1

Copyright National Fire Protection Association
Provided by IHS under license with NFPA
No reproduction or networking permitted without license from IHS
Not for Resale

Gravity pneumatic waste or linen conveying systems ..... *see* Waste or linen conveying systems
Gravity waste or linen chutes ..... *see* Waste or linen chutes, gravity

-H-

High-temperature corrosives A.4.3
Hoods, charging 4.2.5.4
Hydrochloric acid A.4.3

-I-

Incinerator rooms 4.2.7
Incinerators ..... Chap. 4; *see also* Chimneys
Air supply, combustion/ventilation 4.1.3
Auxiliary fuel, provisions for 4.1.1
Charging 4.2.5
Chute interface 5.2.7.3
Clearances 4.2.4
Definition 3.3.3, A.3.3.3
Design/construction 4.2.1
Electrical supply 4.1.2
Outdoor 4.4
Placement 4.2.3
Residue removal 4.2.6
Rooms 4.2.7
Spark arresters 4.1.4
Interior metal chimneys, clearances 4.3.5.4

-K-

Keys
Limited access gravity chutes 5.2.1.2, 5.2.5.2.4
Service opening room 5.2.1.2, 5.2.5.4

-L-

Labeled (definition) 3.2.3
Limited access gravity chutes 5.2.1.1, 5.2.1.2, 5.2.5.2
Limited combustible (definition) ..... 3.3..4, A.3.3.4
Lined metal waste chutes 5.2.2.6
Linen chutes ..... *see* Waste or linen chutes, gravity
Linings ..... *see* Refractory linings
Listed (definition) 3.2.4, A.3.2.4
Listed medium-heat chimneys 4.3.2, 4.3.8.1.1, A.4.3
Use as waste chutes 5.2.2.8
Loading operations, waste 4.2.5.1, 4.2.5.2
Low-temperature chimneys 4.3.6, A.4.3.6

-M-

Masonry chimneys 4.3.4
Clearances 4.3.5.2
Construction/support ..... 4.3.1.4 to 4.3.1.6
Masonry waste chutes 5.2.2.5
Mechanical charging system 4.2.5.2
Medium-heat chimneys ..... *see* Listed medium-heat chimneys
Metal chimneys 4.3.1.7, 4.3.3, A.4.3.3.3.2, A.4.3.3.4.3
Exterior, clearances 4.3.5.3
Interior, clearances 4.3.5.4
Metal linen or waste chutes ..... 5.2.2.2, Fig. 5.2.2.2, 5.2.2.6, 5.2.2.7
Metal linings, chimney A.4.3
Multibag loading, waste/linen systems 5.3.2.2

-N-

Nitric acid A.4.3
Noncombustible (definition) 3.3.5
Noncombustible construction
Clearances to 4.2.4.3, 4.2.4.4, 4.2.4.10
Incinerators and incinerator rooms 4.2.4.3, 4.2.4.4, 4.2.4.10, 4.2.7.1
Metal chimneys, walls surrounding 4.3.3.7

-O-

Oil-burning installations 4.1.1.2, 4.1.1.3
Openings ..... *see also* Service opening
Charging 4.2.5.5, 4.2.5.6
Doors for ..... *see* Fire doors
Outdoor incinerators 4.4

-P-

Pipe, riser 5.3.2.4
Piping ..... *see* Transport piping
Pneumatic waste/linen conveying systems 5.2.1.3

-R-

References ..... Chap. 2, Annex B
Refractory linings 4.2.1.3, A.4.3
Castable plastic 4.3.3.5, 4.3.8.4
Chimney connectors 4.3.8.3, 4.3.8.4
Masonry chimneys, use in 4.3.4.1.1, 4.3.5.1.2
Metal chimneys, use in ..... 4.3.3.3 to 4.3.3.5, A.4.3.3.3.2, A.4.3.3.4.3
Metal waste chutes 5.2.2.6.1
Residue removal 4.2.6
Retroactivity of standard 1.4
Risers, full pneumatic waste/linen conveying systems
Enclosure 5.3.3
Offsets 5.3.2.7
Pipe 5.3.2.4
Roofs
Combustible 4.3.5.4.3
Incinerator used as part of 4.2.1.2
Rooms
Charging ..... 4.2.5.3 to 4.2.5.6
Chute discharge 5.2.7
Chute service opening 5.2.5.3, 5.2.5.4
Full pneumatic waste/linen conveying systems service loading 5.3.2.3
Gravity pneumatic discharge 5.4.2.4, 5.4.4
Incinerators 4.2.7
Waste compactor chute terminal, compacting, or storage ... 7.2.4
Waste processing equipment 9.2, 9.4
Waste storage ..... Chap. 8

-S-

Safety controls, fuel burners 4.1.1.3
Scope of standard 1.1
Service loading rooms, full pneumatic waste/linen conveying systems 5.3.2.3
Service opening
Gravity chutes 5.2.5
Rooms 5.2.5.3, 5.2.5.4
Shall (definition) 3.2.5
Smoke test, masonry chimneys 4.3.4.3
Spark arresters 4.1.4, 4.3.7.3
Spark screens 4.1.4.7
Spillage control, waste 6.2
Sprinkler systems
Incinerator rooms 4.2.7.3
Waste compactors 7.2
Waste handling systems 6.4
Waste or linen chutes and transport systems ... 5.2.2.6.2, 5.2.2.6.3
Chute rooms 5.2.7.2
Chutes 5.2.6
Collector discharge area 5.3.6.2
Full pneumatic waste/linen conveying systems 5.3.4
Gravity pneumatic waste/linen conveying systems 5.4.2.3, 5.4.2.4.3
Waste processing equipment rooms 9.4
Waste storage rooms 8.3
Standard (definition) 3.2.6

Copyright National Fire Protection Association
Provided by IHS under license with NFPA
No reproduction or networking permitted without license from IHS
Not for Resale

Sulfuric acid A.4.3
Sulfurous acid A.4.3

-T-

Transport piping
Exiting 2 hour fire-rated shafts 5.3.5.3, 5.4.3.3
Full pneumatic waste/linen conveying systems 5.3.5
Gravity pneumatic waste/linen conveying systems 5.4.3
Penetrating fire-rated walls 5.3.5.2, 5.4.3.2
Size and thickness 5.3.5.1, 5.4.3.1

-V-

Ventilation, air supply for 4.1.3
Venting, chute 5.2.2.4
Vertical chutes 5.2.4

-W-

Walls ..... *see also* Fire separation
Chute thickness 5.2.2.7
Combustible 4.3.5.4.1
Incinerator as 4.2.1.2
Transport piping penetrating 5.3.5.2, 5.4.3.2
Waste compactors ..... Chap. 7
Definition 3.3.6
Waste handling systems, other ..... Chap. 6
Enclosure requirements 6.3
Spillage control 6.2
Waste loading operations 4.2.5.1, 4.2.5.2
Waste or linen chutes, gravity ..... 5.2, Fig. A.5.2(a), Fig. A.5.2(b); *see also* Waste or linen conveying systems
Construction 5.2.2
Definition 3.3.2, A.3.3.2
Discharge
Doors 5.2.3
Rooms 5.2.7
Enclosure (chase) 5.2.4
General access 5.2.5.1
Incinerator interface 5.2.7.3
Limited access 5.2.5.2
Lined metal 5.2.2.6
Masonry 5.2.2.5
Medium-heat chimneys, use of 5.2.2.8
Offsets ..... 5.2.2.2, Fig. 5.2.2.2
Service openings 5.2.5
Sprinklers 5.2.6
Standard diameter 5.2.2.3
Supports 5.2.2.1
Venting 5.2.2.4
Wall thickness 5.2.2.7
Waste or linen conveying systems
Full pneumatic ..... 5.3, Fig. A.5.3(a) to Fig. A.5.3(e)
Air source 5.3.2.5
Collector discharge area 5.3.6
Construction 5.3.2
Definition 3.3.7.1
Engineered alternative systems ..... 5.3.5.2.3, A.5.3.5.2.3, Fig. A.5.3(b) to Fig. A.5.3(e)
Loading stations 5.3.2.1.1
Doors 5.3.3.2
Supports 5.3.2.6
Multi-bag loading 5.3.2.2
Riser
Enclosure (chase) 5.3.3
Offsets 5.3.2.7
Pipe 5.3.2.4
Service loading rooms 5.3.2.3
Sprinkler systems 5.3.4
Transport piping 5.3.5
Gravity pneumatic ..... 5.4, Fig. A.5.4
Collector discharge area 5.4.4
Construction 5.4.2
Definition 3.3.7.2
Sprinkler systems 5.4.2.3
Transport piping 5.4.3
Waste processing systems and equipment ..... Chap. 9; *see also* Waste compactors
Definition 3.3.8
Rooms for 9.2, 9.4
Waste storage rooms ..... Chap. 8
Wet ash removal systems 4.2.2.5, 4.2.2.6
Wet scrubbers 4.1.4.1, 4.3.8.8

Copyright National Fire Protection Association
Provided by IHS under license with NFPA
No reproduction or networking permitted without license from IHS
Not for Resale

Sequence of Events Leading to Publication of an NFPA Committee Document

Call goes out for proposals to amend existing document or for recommendations on new document.

▼

Committee meets to act on proposals, to develop its own proposals, and to prepare its report.

▼

Committee votes on proposals by letter ballot. If two-thirds approve, report goes forward. Lacking two-thirds approval, report returns to committee.

▼

Report — *Report on Proposals* (ROP) — is published for public review and comment.

▼

Committee meets to act on each public comment received.

▼

Committee votes on comments by letter ballot. If two-thirds approve, supplementary report goes forward. Lacking two-thirds approval, supplementary report returns to committee.

▼

Supplementary report — *Report on Comments* (ROC) — is published for public review.

▼

NFPA membership meets (Annual or Fall Meeting) and acts on committee report (ROP or ROC).

▼

Committee votes on any amendments to report approved at NFPA Annual or Fall Meeting.

▼

Appeals to Standards Council on Association action must be filed within 20 days of the NFPA Annual or Fall Meeting.

▼

Standards Council decides, based on all evidence, whether or not to issue standard or to take other action, including upholding any appeals.

Committee Membership Classifications

The following classifications apply to Technical Committee members and represent their principal interest in the activity of the committee.

M *Manufacturer:* A representative of a maker or marketer of a product, assembly, or system, or portion thereof, that is affected by the standard.

U *User:* A representative of an entity that is subject to the provisions of the standard or that voluntarily uses the standard.

I/M *Installer/Maintainer:* A representative of an entity that is in the business of installing or maintaining a product, assembly, or system affected by the standard.

L *Labor:* A labor representative or employee concerned with safety in the workplace.

R/T *Applied Research/Testing Laboratory:* A representative of an independent testing laboratory or independent applied research organization that promulgates and/or enforces standards.

E *Enforcing Authority:* A representative of an agency or an organization that promulgates and/or enforces standards.

I *Insurance:* A representative of an insurance company, broker, agent, bureau, or inspection agency.

C *Consumer:* A person who is, or represents, the ultimate purchaser of a product, system, or service affected by the standard, but who is not included in the *User* classification.

SE *Special Expert:* A person not representing any of the previous classifications, but who has a special expertise in the scope of the standard or portion thereof.

NOTES:

1. "Standard" connotes code, standard, recommended practice, or guide.
2. A representative includes an employee.
3. While these classifications will be used by the Standards Council to achieve a balance for Technical Committees, the Standards Council may determine that new classifications of members or unique interests need representation in order to foster the best possible committee deliberations on any project. In this connection, the Standards Council may make such appointments as it seems appropriate in the public interest, such as the classification of "Utilities" in the National Electrical Code Committee.
4. Representatives of subsidiaries of any group are generally considered to have the same classification as the parent organization.

Copyright National Fire Protection Association
Provided by IHS under license with NFPA
No reproduction or networking permitted without license from IHS
Not for Resale

NFPA Technical Committee Document Proposal Form

Note: All proposals must be received by 5:00 p.m. EST/EDST on the published proposal closing date.

For further information on the standards-making process, please contact Codes and Standards Administration at 617-984-7249. For technical assistance, please call NFPA at 617-770-3000.

FOR OFFICE USE ONLY
Log #: _____
Date Rec'd: _____

Please indicate in which format you wish to receive your ROP/ROC: ☐ **CD ROM** ☐ **paper** ☐ **download**
(Note: In choosing the download option you intend to view the ROP/ROC from our Website. No copy will be sent to you.)

Date 12/18/02 **Name** John B. Smith **Telephone** 617-555-1212
Company _____
Address 9 Seattle St. **City** Seattle **State** WA **Zip** 02255
Please indicate organization represented (if any) Fire Marshals Assn. of North America

1. **a) NFPA Document Title** National Fire Alarm Code
   b) NFPA No. & Edition NFPA 72, 2002 ed. **c) Section/Paragraph** 4.4.7.1.1

2. **Proposal Recommends:** *(check one)* ☐ **new text** ☐ **revised text** ☒ **deleted text**

3. **Proposal.** *(Include proposed new or revised wording, or identification of wording to be deleted.)* Note: Proposed text should be in legislative format, that is, use underscore to denote wording to be inserted (inserted wording) and strike-through to denote wording to be deleted (~~deleted wording~~). Delete exception.

4. **Statement of Problem and Substantiation for Proposal.** Note: State the problem that will be resolved by your recommendation. Give the specific reason for your proposal including copies of tests, research papers, fire experience, etc. If more than 200 words, it may be abstracted for publication. A properly installed and maintained system should be free of ground faults. The occurrence of one or more ground faults should be required to cause a "trouble" signal because it indicates a condition that could contribute to future malfunction of the system. Ground fault protection has been widely available on these systems for years and its cost is negligible. Requiring it on all systems will promote better installations, maintenance and reliability.

5. ☒ **This Proposal is Original Material.** Note: Original material is considered to be the submitter's own idea based on or as a result of his/her own experience, thought, or research and, to the best of his/her knowledge, is not copied from another source.

   ☐ **This Proposal is Not Original Material; Its Source** ***(if known)*** **is as Follows:** _____

Sample

I hereby grant the NFPA all and full rights in copyright to this proposal, and I understand that I acquire no rights in any publication of NFPA in which this proposal in this or another similar or analogous form is used.

Signature ***(Required)*** John B. Smith

PLEASE USE SEPARATE FORM FOR EACH PROPOSAL • NFPA FAX (617) 770-3500

Mail to: Secretary, Standards Council • NFPA • 1 Batterymarch Park • PO Box 9101 • Quincy, MA 02269-9101

--`,,`-`-`,,`,,`,`,,`---

Copyright National Fire Protection Association
Provided by IHS under license with NFPA
No reproduction or networking permitted without license from IHS

Not for Resale

NFPA Technical Committee Document Proposal Form

Note: All proposals must be received by 5:00 p.m. EST/EDST on the published proposal closing date.

For further information on the standards-making process, please contact Codes and Standards Administration at 617-984-7249. For technical assistance, please call NFPA at 617-770-3000.

FOR OFFICE USE ONLY
Log #: _____
Date Rec'd: _____

Please indicate in which format you wish to receive your ROP/ROC: ☐ **CD ROM** ☐ **paper** ☐ **download**
(Note: In choosing the download option you intend to view the ROP/ROC from our Website. No copy will be sent to you.)

Date _____ **Name** _____ **Telephone** _____
Company _____
Address _____ **City** _____ **State** _____ **Zip** _____
Please indicate organization represented (if any) _____

1. **a) NFPA Document Title** _____
   b) NFPA No. & Edition _____ **c) Section/Paragraph** _____

2. **Proposal Recommends:** *(check one)* ☐ **new text** ☐ **revised text** ☐ **deleted text**

3. **Proposal.** *(Include proposed new or revised wording, or identification of wording to be deleted.)* Note: Proposed text should be in legislative format, that is, use underscore to denote wording to be inserted (inserted wording) and strike-through to denote wording to be deleted (~~deleted wording~~). _____

4. **Statement of Problem and Substantiation for Proposal.** Note: State the problem that will be resolved by your recommendation. Give the specific reason for your proposal including copies of tests, research papers, fire experience, etc. If more than 200 words, it may be abstracted for publication. _____

5. ☐ **This Proposal is Original Material.** Note: Original material is considered to be the submitter's own idea based on or as a result of his/her own experience, thought, or research and, to the best of his/her knowledge, is not copied from another source.

   ☐ **This Proposal is Not Original Material; Its Source *(if known)* is as Follows:** _____

I hereby grant the NFPA all and full rights in copyright to this proposal, and I understand that I acquire no rights in any publication of NFPA in which this proposal in this or another similar or analogous form is used.

Signature *(Required)* _____

PLEASE USE SEPARATE FORM FOR EACH PROPOSAL • NFPA FAX (617) 770-3500

Mail to: Secretary, Standards Council • NFPA • 1 Batterymarch Park • PO Box 9101 • Quincy, MA 02269-9101

--`,,`,,-`-`,,`,,`,`,,`---

Copyright National Fire Protection Association
Provided by IHS under license with NFPA
No reproduction or networking permitted without license from IHS

Not for Resale