NFPA 72®

National Fire Alarm Code®

2007 Edition



NFPA, 1 Batterymarch Park, Quincy, MA 02169-7471
An International Codes and Standards Organization

Copyright National Fire Protection Association
Provided by IHS under license with NFPA
No reproduction or networking permitted without license from IHS

Not for Resale

IMPORTANT NOTICES AND DISCLAIMERS CONCERNING NFPA DOCUMENTS

NOTICE AND DISCLAIMER OF LIABILITY CONCERNING THE USE OF NFPA DOCUMENTS

NFPA codes, standards, recommended practices, and guides, of which the document contained herein is one, are developed through a consensus standards development process approved by the American National Standards Institute. This process brings together volunteers representing varied viewpoints and interests to achieve consensus on fire and other safety issues. While the NFPA administers the process and establishes rules to promote fairness in the development of consensus, it does not independently test, evaluate, or verify the accuracy of any information or the soundness of any judgments contained in its codes and standards.

The NFPA disclaims liability for any personal injury, property or other damages of any nature whatsoever, whether special, indirect, consequential or compensatory, directly or indirectly resulting from the publication, use of, or reliance on this document. The NFPA also makes no guaranty or warranty as to the accuracy or completeness of any information published herein.

In issuing and making this document available, the NFPA is not undertaking to render professional or other services for or on behalf of any person or entity. Nor is the NFPA undertaking to perform any duty owed by any person or entity to someone else. Anyone using this document should rely on his or her own independent judgment or, as appropriate, seek the advice of a competent professional in determining the exercise of reasonable care in any given circumstances.

The NFPA has no power, nor does it undertake, to police or enforce compliance with the contents of this document. Nor does the NFPA list, certify, test or inspect products, designs, or installations for compliance with this document. Any certification or other statement of compliance with the requirements of this document shall not be attributable to the NFPA and is solely the responsibility of the certifier or maker of the statement.

Copyright National Fire Protection Association
Provided by IHS under license with NFPA
No reproduction or networking permitted without license from IHS
Not for Resale

ADDITIONAL NOTICES AND DISCLAIMERS

Updating of NFPA Documents

Users of NFPA codes, standards, recommended practices, and guides should be aware that these documents may be superseded at any time by the issuance of new editions or may be amended from time to time through the issuance of Tentative Interim Amendments. An official NFPA document at any point in time consists of the current edition of the document together with any Tentative Interim Amendments and any Errata then in effect. In order to determine whether a given document is the current edition and whether it has been amended through the issuance of Tentative Interim Amendments or corrected through the issuance of Errata, consult appropriate NFPA publications such as the National Fire Codes® Subscription Service, visit the NFPA website at www.nfpa.org, or contact the NFPA at the address listed below.

Interpretations of NFPA Documents

A statement, written or oral, that is not processed in accordance with Section 6 of the Regulations Governing Committee Projects shall not be considered the official position of NFPA or any of its Committees and shall not be considered to be, nor be relied upon as, a Formal Interpretation.

Patents

The NFPA does not take any position with respect to the validity of any patent rights asserted in connection with any items which are mentioned in or are the subject of NFPA codes, standards, recommended practices, and guides, and the NFPA disclaims liability for the infringement of any patent resulting from the use of or reliance on these documents. Users of these documents are expressly advised that determination of the validity of any such patent rights, and the risk of infringement of such rights, is entirely their own responsibility.

NFPA adheres to applicable policies of the American National Standards Institute with respect to patents. For further information contact the NFPA at the address listed below.

Law and Regulations

Users of these documents should consult applicable federal, state, and local laws and regulations. NFPA does not, by the publication of its codes, standards, recommended practices, and guides, intend to urge action that is not in compliance with applicable laws, and these documents may not be construed as doing so.

Copyrights

This document is copyrighted by the NFPA. It is made available for a wide variety of both public and private uses. These include both use, by reference, in laws and regulations, and use in private self-regulation, standardization, and the promotion of safe practices and methods. By making this document available for use and adoption by public authorities and private users, the NFPA does not waive any rights in copyright to this document.

Use of NFPA documents for regulatory purposes should be accomplished through adoption by reference. The term "adoption by reference" means the citing of title, edition, and publishing information only. Any deletions, additions, and changes desired by the adopting authority should be noted separately in the adopting instrument. In order to assist NFPA in following the uses made of its documents, adopting authorities are requested to notify the NFPA (Attention: Secretary, Standards Council) in writing of such use. For technical assistance and questions concerning adoption of NFPA documents, contact NFPA at the address below.

For Further Information

All questions or other communications relating to NFPA codes, standards, recommended practices, and guides and all requests for information on NFPA procedures governing its codes and standards development process, including information on the procedures for requesting Formal Interpretations, for proposing Tentative Interim Amendments, and for proposing revisions to NFPA documents during regular revision cycles, should be sent to NFPA headquarters, addressed to the attention of the Secretary, Standards Council, NFPA, 1 Batterymarch Park, P.O. Box 9101, Quincy, MA 02269-9101.

For more information about NFPA, visit the NFPA website at www.nfpa.org.

--`,,```,,,,````-`-`,,`,,`,`,,`---

Copyright National Fire Protection Association
Provided by IHS under license with NFPA
No reproduction or networking permitted without license from IHS

Not for Resale

Copyright © 2006 National Fire Protection Association. All Rights Reserved.

NFPA 72®

National Fire Alarm Code®

2007 Edition

This edition of *NFPA 72*®, *National Fire Alarm Code*®, was prepared by the Technical Committees on Fundamentals of Fire Alarm Systems, Initiating Devices for Fire Alarm Systems, Protected Premises Fire Alarm Systems, Notification Appliances for Fire Alarm Systems, Supervising Station Fire Alarm Systems, Public Fire Reporting Systems, Testing and Maintenance of Fire Alarm Systems, and Single- and Multiple-Station Alarms and Household Fire Alarm Systems; released by the Technical Correlating Committee on Signaling Systems for the Protection of Life and Property; and acted on by NFPA at its June Association Technical Meeting held June 4–8, 2006, in Orlando, FL. It was issued by the Standards Council on July 28, 2006, with an effective date of August 17, 2006, and supersedes all previous editions.

Tentative interim amendments (TIAs) to 5.7.3.2.3.1 and 6.8.2.1 were issued on July 28, 2006. For further information on tentative interim amendments, see Section 5 of the NFPA Regulations Governing Committee Projects available at:

http://www.nfpa.org/assets/files/PDF/CodesStandards/TIAErrataFI/TIARegs.pdf

This edition of *NFPA 72* was approved as an American National Standard on August 17, 2006.

Origin and Development of *NFPA 72*

The development of NFPA's signaling standards dates back to 1898 with the appointment of the Committee on Thermo-Electric Fire Alarms. The 1905 edition of NBFU 71A, *Rules and Requirements of the National Board of Fire Underwriters for the Construction, Installation, and Use of Signaling Systems Used for the Transmission of Signals Affecting the Fire Hazard as Recommended by the National Fire Protection Association*, and related documents dating back to 1903 were among the first of numerous signaling standards published in conjunction with the National Fire Protection Association. The descendants of these earlier standards have now been consolidated into the *National Fire Alarm Code, NFPA 72*.

The first edition of the *National Fire Alarm Code*, published in 1993, was a consolidation of the 1989 edition of NFPA 71, *Standard for the Installation, Maintenance, and Use of Signaling Systems for Central Station Service*; the 1990 edition of NFPA 72, *Standard for the Installation, Maintenance, and Use of Protective Signaling Systems*; the 1990 edition of NFPA 72E, *Standard on Automatic Fire Detectors*; the 1989 edition of NFPA 72G, *Guide for the Installation, Maintenance, and Use of Notification Appliances for Protective Signaling Systems*; the 1988 edition of NFPA 72H, *Guide for Testing Procedures for Local, Auxiliary, Remote Station, and Proprietary Protective Signaling Systems*; and the 1989 edition of NFPA 74, *Standard for the Installation, Maintenance, and Use of Household Fire Warning Equipment*. Many of the requirements of these standards were identical or very similar. The recommendations that were taken from the guides (NFPA 72G and NFPA 72H) were changed to mandatory requirements.

The 1996 edition of *NFPA 72* incorporated many changes of a technical nature. These changes related to issues such as the Americans with Disabilities Act, software testing, fire modeling, and communications.

The 1999 edition represented a major change in code content and organization. The chapters were arranged to facilitate user friendliness and provide a logical structure. A new chapter on public fire reporting was added, and many technical revisions were made. Annex B (formerly Appendix B) was streamlined to facilitate ease of use, many unenforceable terms were removed, and Chapter 3 was reorganized to facilitate a more logical approach.

The 2002 edition reflected an extensive editorial revision of the Code to comply with the latest edition of the *Manual of Style for NFPA Technical Committee Documents*. These revisions included the addition of three administrative chapters at the beginning of the Code: "Administration," "Referenced Publications," and "Definitions." Eight technical chapters followed the administrative chapters in the same sequence as in the 1999 edition. Other editorial revisions included the breakout of paragraphs with multiple requirements into individually numbered paragraphs for each requirement, the minimization of use of exceptions, the use of consistent headings for sections and section subdivisions, and reorganization to limit paragraph numbering to six digits.

--`,,```,,,,````-`-`,,`,,`,`,,`---

Copyright National Fire Protection Association
Provided by IHS under license with NFPA
No reproduction or networking permitted without license from IHS

Not for Resale

The 2002 edition contained a number of technical revisions throughout the Code. These included a major revision of the power supply requirements; a new requirement addressing impairments to fire alarm systems; additional requirements concerning the review and approval of performance-based detection system designs; revision of the rules for system survivability from attack by fire; the introduction of rules for an alternate approach for audible signaling; the addition of requirements to address performance-based designs for visible signaling; the relocation of testing and maintenance requirements for single- and multiple-station alarms and household fire alarm systems to the testing and maintenance chapter; and revisions to re-establish the prescriptive rules for household fire-warning equipment from the 1996 edition of the Code.

The 2007 edition contains a number of technical revisions including many to accommodate new technology and to take advantage of new research. Changes have also been made to better address the integration of mass notification systems and other systems with fire alarm systems. Revisions have also been made in several areas of the Code for clarity and to enhance its usability.

Some of the more significant revisions in the Code address protection of fire alarm control units, personnel qualification, heat detector response time, smoke detector spacing, smoke detection in ducts, detectors that use multiple sensing inputs, video image smoke and flame detection, synchronization of visible notification appliances, exit marking audible notification appliances, tactile notification appliances, different types of protected premises fire alarm system, and in-building enhancement systems for firefighter radio communications.

Significant changes to the requirements for smoke alarms in residential applications include revisions to require the interconnection of smoke alarms for existing occupancies, revisions to require additional smoke alarms for larger dwelling units, and revisions to allow voice messages to be included as a part of the smoke alarm notification signal.

Revisions to enhance and clarify the Code include those that address suppression system inputs to the fire alarm system, emergency/voice alarm communications systems, fire alarm system interface with elevator systems, and the means to indicate central station service. In addition, a complete revision of the Record of Completion Form along with examples of filled-out forms have been provided.

Other significant changes include the addition of two new annexes — one to provide guidance for the design of mass notification systems and one to replace previous annex material for the design of fire service interfaces with a separate industry standard.

Prior editions of this document have been translated into languages other than English, including Spanish.

--`,,```,,,,````-`-`,,`,,`,`,,`---

Copyright National Fire Protection Association
Provided by IHS under license with NFPA
No reproduction or networking permitted without license from IHS
Not for Resale

Technical Correlating Committee on Signaling Systems for the Protection of Life and Property (SIG-AAC)

Wayne D. Moore, *Chair*
Hughes Associates, Incorporated, RI [SE]

Lee F. Richardson, *Nonvoting Secretary*
National Fire Protection Association, MA

Andrew G. Berezowski, Honeywell Incorporated, CT [M]
Rep. National Electrical Manufacturers Association
J. Robert Boyer, GE Infrastructure Security, NJ [M]
Richard W. Bukowski, U.S. National Institute of Standards & Technology, MD [RT]
Merton W. Bunker, Jr. U.S. Department of State, DC [U]
Stephen J. DiGiovanni, Clark County Fire Department, NV [E]
Rep. International Fire Marshals Association
John C. Fannin, III, SafePlace Corporation, DE [U]
Bruce Fraser, Tyco/SimplexGrinnell, MA [M]
John K. Guhl, California State Fire Marshal, CA [E]
Rep. International Association of Fire Chiefs
Vic Humm, Vic Humm & Associates, TN [SE]
Peter A. Larrimer, U.S. Department of Veterans Affairs, PA [U]
James M. Mundy, Jr., Asset Protection Associates Limited, NY [M]
Rep. Automatic Fire Alarm Association, Incorporated
Thomas F. Norton, Concord, MA [IM]
Rep. U.S. Naval Historical Center
Paul E. Patty, Underwriters Laboratories Incorporated, IL [RT]
Robert P. Schifiliti, R. P. Schifiliti Associates, Incorporated, MA [SE]
Donald E. Sievers, D. E. Sievers & Associates, Limited, MD [SE]
Tom G. Smith, Cox Systems Technology, CA [IM]
Rep. National Electrical Contractors Association

Alternates

Thomas P. Hammerberg, Automatic Fire Alarm Association, Incorporated, FL [E]
(Alt. to J. M. Mundy, Jr.)
Bill Hopple, Tyco/SimplexGrinnel, CA [M]
(Alt. to B. Fraser)
Jack McNamara, Bosch Security Systems, NY [M]
(Alt. to A. G. Berezowski)
Lawrence J. Shudak, Underwriters Laboratories Incorporated, IL [RT]
(Alt. to P. E. Patty)
Frank L. Van Overmeiren, FP&C Consultants, Incorporated, IN [SE]
(Alt. to V. Humm)
Lawrence J. Wenzel, Hughes Associates, Incorporated, CT [SE]
(Alt. to W. D. Moore)

Nonvoting

Douglas M. Aiken, Lakes Region Mutual Fire Aid, NH [E]
Rep. TC on Public Fire Reporting Systems
Benjamin B. Aycock, Charlotte-Mecklenburg, NC
(Member Emeritus)
Art Black, Carmel Fire Depart/Carmel Fire Prot Associates, CA [E]
Rep. TC on Supervising Station Fire Alarm Systems
Shane M. Clary, Bay Alarm Company, CA [IM]
Rep. TC on Fundamentals of Fire Alarm Systems
Kenneth W. Dungan, Risk Technologies, LLC, TN [SE]
Rep. TC on Initiating Devices for Fire Alarm Systems
Daniel T. Gottuk, Hughes Associates, Incorporated, MD [SE]
Rep. TC on Household Fire Alarm Systems
Raymond A. Grill, Arup Fire, VA [SE]
Rep. TC on Notification Appliances for Fire Alarm Systems
J. Jeffrey Moore, Hughes Associates, Incorporated, OH [SE]
Rep. TC on Protected Premises Fire Alarm Systems
Martin H. Reiss, The RJA Group, Incorporated, MA [SE]
Rep. Safety to Life Correlating Committee
Timothy M. Soverino, Nantucket, MA [U]
Rep. TC on Testing & Maintenance of Fire Alarm Systems
Evan E. Stauffer, Jr., U.S. Department of the Navy, PA
Rep. TC Public Emergency Service Communications
Dean K. Wilson, Hughes Associates, Incorporated, PA [SE]

Lee F. Richardson, NFPA Staff Liaison

This list represents the membership at the time the Committee was balloted on the final text of this edition. Since that time, changes in the membership may have occurred. A key to classifications is found at the back of the document.

NOTE: Membership on a committee shall not in and of itself constitute an endorsement of the Association or any document developed by the committee on which the member serves.

Committee Scope: This Committee shall have primary responsibility for documents on the installation, performance, maintenance, testing, and use of signaling components and signaling systems for the protection of life and property.

Copyright National Fire Protection Association
Provided by IHS under license with NFPA
No reproduction or networking permitted without license from IHS
Not for Resale

Technical Committee on Fundamentals of Fire Alarm Systems (SIG-FUN) (Chapters 1 and 4)

Shane M. Clary, *Chair*
Bay Alarm Company, CA [IM]

Sanford E. Egesdal, *Secretary*
Egesdal Associates PLC, MN [SE]

William R. Ball, National Joint Apprentice & Training Committee, IN [L]
Rep. International Brotherhood of Electrical Workers
Andrew G. Berezowski, Honeywell Incorporated, CT [M]
Rep. National Electrical Manufacturers Association
Robert A. Bonifas, Alarm Detection Systems, Incorporated, IL [IM]
Rep. Central Station Alarm Association
Daniel G. Decker, Safety Systems, Inc., MI [IM]
Lawrence Esch, World Security & Control Engineering, IL [E]
Rep. Illinois Fire Inspectors Association
John C. Fannin, III, SafePlace Corporation, DE [U]
David Frable, U.S. General Services Administration, IL [U]
Daniel J. Gauvin, Tyco/SimplexGrinnell, MA [M]
David Goodyear, Seneca College, Canada [SE]
Kevin M. Green, Schirmer Engineering Corporation, CA [I]
Jeffrey S. Hancock, U.S. Department of Energy, TX [U]
Scott Jacobs, ISC Electronic Systems, Inc., CA [IM]
Walter J. Kessler, Jr., FM Approvals, MA [I]
Chester S. (Stan) Maciaszek, Westinghouse Savannah River Company, SC [U]
Richard A. Malady, Fire Fighter Sales & Service Company, PA [IM]
Rep. National Assn. of Fire Equipment Distributors
Maurice Marvi, HSB Professional Loss Control, NJ [I]
Jack McNamara, Bosch Security Systems, NY [M]
James M. Mundy, Jr., Asset Protection Associates, Ltd., NY [M]
Rep. Automatic Fire Alarm Association, Inc.
Thomas F. Norton, Concord, MA [IM]
Rep. U.S. Naval Historical Center
David J. Stone, Underwriters Laboratories Inc., IL [RT]
Ed Vaillancourt, E & M International, Inc., NM [M]
Rep. Fire Suppression Systems Association
Allyn J. Vaughn, The RJA Group, Inc., NV [SE]
William F. Wayman, Jr., Hughes Associates, Inc., MD [SE]
Jeffrey D. Zwirn, IDS Research & Development, Inc., NJ [SE]

Alternates

James G. Bisker, U.S. Department of Energy, DC [U]
(Alt. to J. S. Hancock)
John Craig, Jr., Safety Systems, Inc., MI [IM]
(Alt. to D. G. Decker)
Manuelita E. David, Schirmer Engineering Corporation, CA [I]
(Alt. to K. M. Green)
Bob Elliott, FM Approvals, MA [I]
(Alt. to W. J. Kessler, Jr.)
Kimberly A. Gruner, Fike Corporation, MO [M]
(Alt. to E. Vaillancourt)
Robert M. Hill, Beacon Fire Alarms, MA [M]
(Alt. to J. M. Mundy, Jr.)
Stanley R. Klein, National Joint Apprenticeship & Training Committee, MD [L]
(Alt. to W. R. Ball)
Maria Marks, Siemens Building Technologies, MD [M]
(Alt. to A. G. Berezowski)
David M. Secoda, Bay Alarm Company, CA [IM]
(Alt. to S. M. Clary)
Lawrence J. Shudak, Underwriters Laboratories Inc., IL [RT]
(Alt. to D. J. Stone)
Dennis R. Yanek, Tyco/ADT Security Systems, NJ [M]
(Alt. to D. J. Gauvin)

Lee F. Richardson, NFPA Staff Liaison

This list represents the membership at the time the Committee was balloted on the final text of this edition. Since that time, changes in the membership may have occurred. A key to classifications is found at the back of the document.

NOTE: Membership on a committee shall not in and of itself constitute an endorsement of the Association or any document developed by the committee on which the member serves.

Committee Scope: This Committee shall have primary responsibility for documents on common system fundamentals for signaling systems, including definitions, requirements for approvals, installation, service, power supplies, equipment locations, compatibility, and system interfaces.

Copyright National Fire Protection Association
Provided by IHS under license with NFPA
No reproduction or networking permitted without license from IHS
Not for Resale

Technical Committee on Initiating Devices for Fire Alarm Systems (SIG-IDS) (Chapter 5 and Annex B)

Kenneth W. Dungan, *Chair*
Risk Technologies, LLC, TN [SE]

Martin H. Reiss, *Secretary*
The RJA Group, Inc., MA [SE]

Mark S. Boone, Corporate Risk Management, VA [U]
Rep. Edison Electric Institute
Win Chaiyabhat, Aon Risk Services, ME [I]
John A. Chetelat, Honeywell Life Safety Group, CT [M]
Rep. Fire Suppression Systems Association
John M. Cholin, J. M. Cholin Consultants Inc., NJ [SE]
Stephen J. DiGiovanni, Clark County Fire Department, NV [E]
Rep. International Fire Marshals Association
Irving Ellner, Siemens Building Technologies, Inc., NJ [M]
Bruce Elmer, TVA Fire and Life Safety, Inc., MI [U]
Rep. The Home Depot
Gary P. Fields, The Protectowire Company, Inc., MA [M]
Scott A. Frazer, InterContinental Hotels Group PLC, GA [U]
Rep. NFPA Lodging Industry Section
Robert A. Hall, R. A. Hall & Associates, NJ [SE]
Bill Hopple, Tyco/SimplexGrinnell, CA [M]
Rep. National Electrical Manufacturers Association
Robert L. Langer, Amerex Corporation, AL [M]
Rep. Fire Equipment Manufacturers' Association
Loren L. Leimer, Hochiki America Corporation, CA [M]
Rep. Automatic Fire Alarm Association, Inc.
Joseph A. Lynch, GE Insurance Solutions, GA [I]
Norbert W. Makowka, National Association of Fire Equipment Distributors, IL [IM]
Chris Marrion, Arup Fire, NY [SE]
Noura Milardo, FM Global, MA [I]
Ovid E. Morphew, Jr., Design/Systems Group, TX [IM]
Rep. National Independent Fire Alarm Distributors Assn.
James W. Mottorn, II, Bosch Security Systems, NY [M]
Lynn Nielson, City of Henderson, NV [E]
Daniel J. O'Connor, Schirmer Engineering Corporation, IL [I]
Paul E. Patty, Underwriters Laboratories Inc., IL [RT]
James C. Roberts, North Carolina Department of Insurance, NC [E]
David L. Royse, Potter Electric Signal Company, MO [M]
Mark Swerdin, Zurich North America, NY [I]
Lawrence J. Wenzel, Hughes Associates, Inc., CT [SE]

Alternates

Mark E. Agar, Fire Equipment Company Inc., MI [IM]
(Alt. to N. W. Makowka)
Michael B. Baker, Automatic Fire Alarm Association, Inc., OR [M]
(Alt. to L. L. Leimer)
Darryl Thomas Brown, Performance Design Technologies, Inc., TN [SE]
(Alt. to K. W. Dungan)
Paul F. Crowley, FM Approvals, MA [I]
(Alt. to N. Milardo)
Michael Earl Dillon, Dillon Consulting Engineers, Inc., CA [SE]
(Alt. to R. A. Hall)
Kenneth L. Gentile, The RJA Group, Inc., TX [SE]
(Alt. to M. H. Reiss)
John A. Guetzke, Guetzke & Associates, Inc., WI [IM]
(Alt. to O. E. Morphew, Jr.)
Thomas L. Hauder, Bosch Security Systems, NY [M]
(Alt. to J. W. Mottorn, II)
Michael A. Henke, Potter Electric Signal Company, MO [M]
(Alt. to D. L. Royse)
Thomas S. Lentz, Aon Risk Services, IL [I]
(Alt. to W. Chaiyabhat)
J. Jeffrey Moore, Hughes Associates, Inc., OH [SE]
(Alt. to L. J. Wenzel)
John L. Parssinen, Underwriters Laboratories Inc., IL [RT]
(Alt. to P. E. Patty)
Richard S. Pawlish, Schirmer Engineering Corporation, IL [I]
(Alt. to D. J. O'Connor)
Sean Pisoni, TVA Fire and Life Safety, Inc., WA [U]
(Alt. to B. Elmer)
Jerry Trotter, City of Henderson, NV [E]
(Alt. to L. Nielson)
Fred J. Wenzel, Jr., GE Insurance Solutions, TX [I]
(Alt. to J. A. Lynch)
James R. York, Siemens Building Technologies, Inc., NJ [M]
(Alt. to I. Ellner)

Lee F. Richardson, NFPA Staff Liaison

This list represents the membership at the time the Committee was balloted on the final text of this edition. Since that time, changes in the membership may have occurred. A key to classifications is found at the back of the document.

NOTE: Membership on a committee shall not in and of itself constitute an endorsement of the Association or any document developed by the committee on which the member serves.

Committee Scope: This Committee shall have primary responsibility for documents on the installation and operation of initiating devices for signaling systems.

Copyright National Fire Protection Association
Provided by IHS under license with NFPA
No reproduction or networking permitted without license from IHS
Not for Resale

Technical Committee on Protected Premises Fire Alarm Systems (SIG-PRO) (Chapter 6)

J. Jeffrey Moore, *Chair*
Hughes Associates, Inc., OH [SE]

Scott Barrett, World Electronics, Inc., FL [M]
James F. Barth, FIREPRO Incorporated, MA [SE]
James G. Bisker, U.S. Department of Energy, DC [U]
David J. Burkhart, Code Consultants, Inc., MO [SE]
Anthony J. Capowski, Tyco/SimplexGrinnell, MA [M]
Harry M. Corson, IV, Siemens Fire Safety, NJ [M]
John Craig, Jr., Safety Systems, Inc., MI [IM]
Paul F. Crowley, FM Approvals, MA [I]
Joseph G. Dafin, U.S. General Services Administration, MD [U]
Keith W. Dix, West Metro Fire Department, CO [E]
Thomas P. Hammerberg, Automatic Fire Alarm Association, Inc., FL [M]
Mark D. Hayes, Schirmer Engineering Corporation, TX [I]
Daniel J. Horon, CADgraphics, Incorporated, ND [M]
Vic Humm, Vic Humm & Associates, TN [SE]
Jim R. Kern, Kern Technical Services, TN [SE]
Stanley R. Klein, National Joint Apprenticeship & Training Committee, MD [L]
Rep. International Brotherhood of Electrical Workers
Thomas E. Kuhta, Willis Corporation, NJ [I]
Fred M. Leber, Leber/Rubes Incorporated, Canada [SE]
Peter Leszczak, U.S. Department of Veterans Affairs, CT [U]
Fletcher MacGregor, Marsh USA Inc., MI [I]
Scott T. Martorano, The Viking Corporation, MI [M]
Rep. National Fire Sprinkler Association
James McFadden, AFA Protective Systems, Inc., NY [IM]
Harris M. Oliff, Security and Fire Enterprises, Inc., CA [IM]
Rep. California Automatic Fire Alarm Association Inc.
Yogesh B. Shah, Honeywell Life Safety/Notifier, CT [M]
Rep. Fire Suppression Systems Association
Lawrence J. Shudak, Underwriters Laboratories Inc., IL [RT]
David Stringfield, University of Minnesota, MN [E]
Rep. International Fire Marshals Association
Ralph E. Transue, The RJA Group, Inc., IL [SE]
Fred J. Wenzel, Jr., GE Insurance Solutions, TX [I]

Alternates

William R. Ball, National Joint Apprentice & Training Committee, IN [L]
(Alt. to S. R. Klein)
Frank Carideo, Sentinel Alarm Company, MA [M]
(Alt. to T. P. Hammerberg)
Shane M. Clary, Bay Alarm Company, CA [IM]
(Alt. to H. M. Oliff)
Gary Girouard, Tyco/SimplexGrinnell, MA [M]
(Alt. to A. J. Capowski)
Jeffrey S. Hancock, U.S. Department of Energy, TX [U]
(Alt. to J. G. Bisker)
Scott D. Harris, AFA Protective Systems, Inc., NY [IM]
(Alt. to J. McFadden)
Jacob P. Hemke, Code Consultants, Inc., MO [SE]
(Alt. to D. J. Burkhart)
Walter J. Kessler, Jr., FM Approvals, MA [I]
(Alt. to P. F. Crowley)
Neil P. Lakomiak, Underwriters Laboratories Inc., IL [RT]
(Alt. to L. J. Shudak)
Peter A. Larrimer, U.S. Department of Veterans Affairs, PA [U]
(Alt. to P. Leszczak)
Timothy John Lawyer, Schirmer Engineering Corporation, CA [I]
(Alt. to M. D. Hayes)
David J. LeBlanc, The RJA Group, Inc., MA [SE]
(Alt. to R. E. Transue)
Stewart J. Levy, U.S. General Services Administration, DC [U]
(Alt. to J. G. Dafin)
Wayne D. Moore, Hughes Associates, Inc., RI [SE]
(Alt. to J. J. Moore)
Alan D. Moors, Siemens Fire Safety, NJ [M]
(Alt. to H. M. Corson, IV)
Kurt A. Ruchala, FIREPRO Incorporated, MA [SE]
(Alt. to J. F. Barth)
Michael D. Sides, GE Insurance Solutions, FL [I]
(Alt. to F. J. Wenzel, Jr.)
Frank L. Van Overmeiren, FP&C Consultants, Inc., IN [SE]
(Alt. to V. Humm)

Nonvoting

Benjamin B. Aycock, Charlotte-Mecklenburg, NC
(Member Emeritus)

Lee F. Richardson, NFPA Staff Liaison

This list represents the membership at the time the Committee was balloted on the final text of this edition. Since that time, changes in the membership may have occurred. A key to classifications is found at the back of the document.

NOTE: Membership on a committee shall not in and of itself constitute an endorsement of the Association or any document developed by the committee on which the member serves.

Committee Scope: This Committee shall have primary responsibility for documents on the installation and operation of protected premises signaling systems, including their interconnection with initiating devices, notification appliances, and other related building control equipment, within the protected premises.

Copyright National Fire Protection Association
Provided by IHS under license with NFPA
No reproduction or networking permitted without license from IHS
Not for Resale

Technical Committee on Notification Appliances for Fire Alarm Systems (SIG-NAS) (Chapter 7)

Raymond A. Grill, *Chair*
Arup Fire, VA [SE]

Joe Achak, Fire Sentry Corporation, CA [M]
Rep. Fire Suppression Systems Association
David E. Becker, Fire Equipment Service Company, KY [IM]
Rep. National Assn. of Fire Equipment Distributors
Robert F. Bitter, Honeywell Inc., MO [M]
Thomas Carrie, Jr., Schirmer Engineering Corporation, IL [I]
Daniel M. Grosch, Underwriters Laboratories Inc., IL [RT]
Rein Haus, Wheelock, Inc., NJ [M]
Rep. National Electrical Manufacturers Association
Jeffrey M. Klein, System Sensor, IL [M]
Rep. Automatic Fire Alarm Association, Inc.
David O. Lowrey, Boulder Fire Department, CO [E]
Navin D. Mehta, U.S. Department of Defense, VA [U]
Warren E. Olsen, Hoffman Estates Fire Dept/Britt-Moore Assoc., IL [E]
Paul Parker, Building Systems Integration Corporation, MI [IM]
Maurice M. Pilette, Mechanical Designs Ltd., MA [SE]
Jack Poole, Poole Consulting Services, Inc., KS [SE]
Sam (Sat) Salwan, Environmental Systems Design, Inc., IL [SE]
Robert P. Schifiliti, R. P. Schifiliti Associates, Inc., MA [SE]
Daniel L. Seibel, Shaw Fire Detection Services, Inc., MI [IM]
James M. Shuster, Faraday, Siemens Building Technologies, NJ [M]
Donald E. Sievers, D. E. Sievers & Associates, Ltd., MD [SE]
Rep. National Association of the Deaf
Thomas C. Williams, Safety Systems, Inc., MI [IM]

Alternates

Scott Chamberlain, Gentex Corporation, MI [M]
(Alt. to R. Haus)
Carl W. Chappell, Poole Consulting Services, Inc., KS [SE]
(Alt. to J. Poole)
Robert J. Keough, The RJA Group, Inc., VA [SE]
(Voting Alt. to RJA Rep.)
James Mongeau, Space Age Electronics, Inc., MA [M]
(Alt. to J. M. Klein)
Robert M. Pikula, Reliable Fire Equipment Company, IL [IM]
(Alt. to D. E. Becker)

Lee F. Richardson, NFPA Staff Liaison

This list represents the membership at the time the Committee was balloted on the final text of this edition. Since that time, changes in the membership may have occurred. A key to classifications is found at the back of the document.

NOTE: Membership on a committee shall not in and of itself constitute an endorsement of the Association or any document developed by the committee on which the member serves.

Committee Scope: This Committee shall have primary responsibility for documents on the installation and operation of notification appliances for signaling systems.

Copyright National Fire Protection Association
Provided by IHS under license with NFPA
No reproduction or networking permitted without license from IHS
Not for Resale

Technical Committee on Supervising Station Fire Alarm Systems (SIG-SSS) (Chapter 8)

Art Black, *Chair*
Carmel Fire Dept/Carmel Fire Prot Assoc., CA [E]

Charles Erichsen, *Secretary*
Tyco/ADT Security Services, Inc., FL [M]

Geoffrey Aus, Menlo Park Fire Protection District, CA [E]
Robert Bitton, Supreme Security Systems, Inc., NJ [IM]
Rep. Central Station Alarm Association
Edward R. Bonifas, Alarm Detection Systems, Inc., IL [IM]
Thomas C. Brown, The RJA Group, Inc., MD [SE]
Robert F. Buckley, Signal Communications Corporation, MA [M]
Paul M. Carroll, Central Signal Corporation, MA [M]
Rep. Automatic Fire Alarm Association, Inc.
Michael D. Cato, Estero Fire Rescue, FL [E]
Scot Colby, Bayou Security Systems, Inc., LA [IM]
Rep. National Burglar & Fire Alarm Association
E. Tom Duckworth, Insurance Services Office, Inc., TX [I]
Patrick M. Egan, Select Security, PA [IM]
Bob Elliott, FM Approvals, MA [I]
Louis T. Fiore, L. T. Fiore, Inc., NJ [SE]
Harvey M. Fox, Keltron Corporation, MA [M]
Robert Gillespie, Jr., Thompsonville Fire Department, CT [U]
Rep. International Municipal Signal Association
Richard Kleinman, AFA Protective Systems Inc., NY [IM]
Neal W. Krantz, LVC Technologies, Inc., MI [IM]
Rep. NFPA Industrial Fire Protection Section
Dennis Lundstedt, Securitas Inc., MI [U]
Eugene A. Monaco, Monaco Enterprises, Inc., WA [M]
Donald C. Pannell, City of Memphis, TN [E]
Isaac I. Papier, Honeywell, Inc., IL [M]
Jeffrey R. Roberts, GE Insurance Solutions, MS [I]
Steven A. Schmit, Underwriters Laboratories Inc., IL [RT]
Robert V. Scholes, Fireman's Fund Insurance Company, CA [I]
James H. Smith, Central Alarm Systems, TX [IM]
Sean P. Titus, Fike Corporation, MO [M]
Rep. Fire Suppression Systems Association

Alternates

Joe Achak, Fire Sentry Corporation, CA [M]
(Alt. to S. P. Titus)
Dick Colacino, Newark Fire Department, NY [U]
(Alt. to R. Gillespie, Jr.)
Bruce Fraser, Tyco/SimplexGrinnell, MA [M]
(Alt. to C. Erichsen)
Richard A. Mahnke, The RJA Group, Inc., IL [SE]
(Alt. to T. C. Brown)
Charlie G. McDaniel, GE Insurance Solutions, WV [I]
(Alt. to J. R. Roberts)
Noura Milardo, FM Global, MA [I]
(Alt. to B. Elliott)
William E. Paradis, Fireman's Fund Insurance Company, MA [I]
(Alt. to R. V. Scholes)
Frank J. Tokarz, Monaco Enterprises, Inc., WA [M]
(Alt. to E. A. Monaco)
Richard A. Wheeler, Central Alarm Systems, TX [IM]
(Alt. to J. H. Smith)

Nonvoting

Ralph H. Mills, Saunderstown, RI [SE]
(Member Emeritus)

Lee F. Richardson, NFPA Staff Liaison

This list represents the membership at the time the Committee was balloted on the final text of this edition. Since that time, changes in the membership may have occurred. A key to classifications is found at the back of the document.

NOTE: Membership on a committee shall not in and of itself constitute an endorsement of the Association or any document developed by the committee on which the member serves.

Committee Scope: This Committee shall have primary responsibility for documents on the installation and operation of off-premises signaling systems, including the signal-receiving facility and the communications between the protected premises and the off-premises signal-receiving facility.

Copyright National Fire Protection Association
Provided by IHS under license with NFPA
No reproduction or networking permitted without license from IHS
Not for Resale

Technical Committee on Public Fire Reporting Systems (SIG-PRS) (Chapter 9)

Douglas M. Aiken, *Chair*
Lakes Region Mutual Fire Aid, NH [U]
Rep. International Municipal Signal Association

Jeffrey G. Knight, *Secretary*
City of Newton Fire Department, MA [U]

R. Bruce Allen, R. B. Allen Company, Inc., NH [IM]
William Ambrefe, City of Beverly, MA [E]
Robert J. Campbell, Braintree, MA [SE]
Daniel R. Dinwiddie, L W Bills Company, MA [M]
Sidney M. Earley, TLC Systems, MA [IM]
Emerson B. Fisher, King-Fisher Company, IL [M]
John K. Guhl, California State Fire Marshal, CA [E]
Rep. International Association of Fire Chiefs
Charles E. Hahl, The Protection Engineering Group, PC, VA [SE]
Robert E. Lapham, Signal Communications Corporation, MA [M]
Robert Malanga, Fire and Risk Engineering, NJ [SE]
Rep. Fairmount Fire Company No. 1
Dinesh K. Patel, U.S. Department of the Navy, CA [U]
Frank J. Tokarz, Monaco Enterprises, Inc., WA [M]

Alternates

Nathaniel M. Johnson, City of Laconia Fire Department, NH [U]
(Alt. to D. M. Aiken)
Eugene A. Monaco, Monaco Enterprises, Inc., WA [M]
(Alt. to F. J. Tokarz)

Lee F. Richardson, NFPA Staff Liaison

This list represents the membership at the time the Committee was balloted on the final text of this edition. Since that time, changes in the membership may have occurred. A key to classifications is found at the back of the document.

NOTE: Membership on a committee shall not in and of itself constitute an endorsement of the Association or any document developed by the committee on which the member serves.

Committee Scope: This Committee shall have primary responsibility for documents on the proper configuration, performance, installation, and operation of public fire alarm reporting systems and auxiliary fire alarm systems. The Committee scope shall include systems that use a communication infrastructure that is publicly owned, operated, and controlled.

Reporting of alarms by voice over the public switched telephone network utilizing the Universal Emergency Number 9-1-1, or any other telephone number that can be dialed, is outside the scope of this Committee.

Copyright National Fire Protection Association
Provided by IHS under license with NFPA
No reproduction or networking permitted without license from IHS
Not for Resale

Technical Committee on Testing and Maintenance of Fire Alarm Systems (SIG-TMS) (Chapter 10)

Timothy M. Soverino, *Chair*
Nantucket, MA [U]
Rep. International Municipal Signal Association

Mark L. Rochholz, *Secretary*
Schirmer Engineering Corporation, IL [I]

Brooks H. Baker, III, University of Alabama at Birmingham, AL [U]
Rep. American Society for Healthcare Engineering
Jeffrey R. Brooks, Tyco/SimplexGrinnell, MA [M]
Merton W. Bunker, Jr., U.S. Department of State, DC [U]
Robert E. Butchko, Siemens Building Technology, Inc., NJ [M]
Louis Chavez, Underwriters Laboratories Inc., IL [RT]
Charles M. Cope, GE Insurance Solutions, NC [I]
Scott D. Corrin, University of California-Riverside, CA [U]
Scott R. Edwards, Gentex Corporation, MI [M]
Rep. National Electrical Manufacturers Association
David L. Foster, Insurance Services Office, Inc., NJ [I]
Elaine B. Gall, Virginia State Fire Marshal's Office, VA [E]
Rep. International Fire Marshals Association
Peter C. Harrod, The RJA Group, Inc., MA [SE]
William E. Johannsen, AFA Protective Systems, Inc., NJ [IM]
Robert H. Kelly, Fire Defense Equipment Company Inc., MI [IM]
J. David Kerr, Plano Fire Department, TX [E]
Rep. NFPA Fire Service Section
David E. Kipley, Framatome ANP/Areva, IL [U]
Rep. Edison Electric Institute
Chuck Koval, U.S. General Services Administration, WA [U]
Peter A. Larrimer, U.S. Department of Veterans Affairs, PA [U]
Joseph B. McCullough, Western Technical Services, Inc., CO [IM]
Michael J. Reeser, Santa Rosa Fire Equipment Service Inc., CA [M]
Rep. California Automatic Fire Alarm Association Inc.
Jeffrey L. Robinson, Westinghouse Savannah River Company, SC [U]
George E. Seymour, Total Safety U.S., Inc., TX [IM]
Rep. National Assn. of Fire Equipment Distributors
Frank L. Van Overmeiren, FP&C Consultants, Inc., IN [SE]

Alternates

Timothy E. Adams, American Society for Healthcare Engineering, IN [U]
(Alt. to B. H. Baker, III)
Steve Carter, Orr Protection Systems, Inc., KY [M]
(Voting Alt. to FSSA Rep.)
Larry R. Dischert, Tyco/ADT Security Services, Inc., NJ [M]
(Alt. to J. R. Brooks)
John F. Gudmundson, Underwriters Laboratories Inc., CA [RT]
(Alt. to L. Chavez)
Thomas P. Hammerberg, Automatic Fire Alarm Association, Inc., FL [M]
(Voting Alt. to AFAA Rep.)
Vic Humm, Vic Humm & Associates, TN [SE]
(Alt. to F. L. Van Overmeiren)
Jon Kapis, The RJA Group, Inc., CA [SE]
(Alt. to P. C. Harrod)
Peter Leszczak, U.S. Department of Veterans Affairs, CT [U]
(Alt. to P. A. Larrimer)
Chester S. (Stan) Maciaszek, Westinghouse Savannah River Company, SC [U]
(Alt. to J. L. Robinson)
Michael D. Sides, GE Insurance Solutions, FL [I]
(Alt. to C. M. Cope)

Lee F. Richardson, NFPA Staff Liaison

This list represents the membership at the time the Committee was balloted on the final text of this edition. Since that time, changes in the membership may have occurred. A key to classifications is found at the back of the document.

NOTE: Membership on a committee shall not in and of itself constitute an endorsement of the Association or any document developed by the committee on which the member serves.

Committee Scope: This Committee shall have primary responsibility for documents on the proper testing and maintenance of signaling systems, their components, and the interface equipment.

--`,,```,,,,````-`-`,,`,,`,`,,`---
Copyright National Fire Protection Association
Provided by IHS under license with NFPA
No reproduction or networking permitted without license from IHS
Not for Resale

Technical Committee on Single- and Multiple-Station Alarms and Household Fire Alarm Systems (SIG-HOU) (Chapter 11)

Daniel T. Gottuk, *Chair*
Hughes Associates, Inc., MD [SE]

Daniel L. Andrus, *Secretary*
Salt Lake City Fire Department, UT [E]
Rep. International Fire Marshals Association

Oded Aron, Port Authority of New York & New Jersey, NJ [U]
Erin Mack Ashley, Combustion Science & Engineering, Inc., MD [SE]
H. Wayne Boyd, U.S. Safety & Engineering Corporation, CA [M]
Rep. California Automatic Fire Alarm Association Inc.
Lawrence Brown, National Association of Home Builders, DC [U]
David E. Christian, Gentex Corporation, MI [M]
Rep. Automatic Fire Alarm Association, Inc.
Mitchell C. Christopher, Brink's Home Security, TX [IM]
Laurence J. Dallaire, U.S. Department of State, DC [U]
Manuelita E. David, Schirmer Engineering Corporation, CA [I]
Edward M. Fraczkowski, EBL Engineers, LLC, MD [SE]
Robert B. Fuller, Fire Code Analysts, Inc., CA [C]
Joseph L. Lynch, III, City of Irondale Fire Department, AL [E]
Jeffrey L. Okun, Nuko Security, Inc., LA [IM]
John R. Pacelli, Gentex Corporation, MI [M]
Rep. National Electrical Manufacturers Association
John L. Parssinen, Underwriters Laboratories Inc., IL [RT]
Forrest J. Pecht, U.S. Access Board, DC [C]
Larry Ratzlaff, Kidde Safety, IL [M]
Michael L. Savage, Sr., Middle Department Inspection Agency, Inc., MD [E]
Raymond P. Schmid, Koffel Associates, Inc., MD [SE]

Alternates

Wendy B. Gifford, Invensys Climate Controls America, IL [M]
(Alt. to J. R. Pacelli)
Jeffery P. McBride, EBL Engineers, LLC, MD [SE]
(Alt. to E. M. Fraczkowski)
Stephen M. Olenick, Combustion Science & Engineering, Inc., MD [SE]
(Alt. to E. M. Ashley)
Paul E. Patty, Underwriters Laboratories Inc., IL [RT]
(Alt. to J. L. Parssinen)

Nonvoting

Arthur S. Lee, U.S. Consumer Product Safety Commission, MD [C]

Lee F. Richardson, NFPA Staff Liaison

This list represents the membership at the time the Committee was balloted on the final text of this edition. Since that time, changes in the membership may have occurred. A key to classifications is found at the back of the document.

NOTE: Membership on a committee shall not in and of itself constitute an endorsement of the Association or any document developed by the committee on which the member serves.

Committee Scope: This Committee shall have primary responsibility for documents on the performance, installation, operation, and use of single- and multiple-station alarms and household alarm systems for fire warning.

--`,,```,,,,````-`-`,,`,,`,`,,`---
Copyright National Fire Protection Association
Provided by IHS under license with NFPA
No reproduction or networking permitted without license from IHS
Not for Resale

Contents

Chapter 1 Administration **72–** 14
1.1 Scope **72–** 14
1.2 Purpose **72–** 14
1.3 Application **72–** 14
1.4 Retroactivity **72–** 14
1.5 Equivalency **72–** 14
1.6 Units and Formulas **72–** 14
1.7 Code Adoption Requirements **72–** 15

Chapter 2 Referenced Publications **72–** 15
2.1 General **72–** 15
2.2 NFPA Publications **72–** 15
2.3 Other Publications **72–** 15
2.4 References for Extracts in Mandatory Sections **72–** 15

Chapter 3 Definitions **72–** 15
3.1 General **72–** 15
3.2 NFPA Official Definitions **72–** 15
3.3 General Definitions **72–** 16

Chapter 4 Fundamentals of Fire Alarm Systems ... **72–** 26
4.1 Application **72–** 26
4.2 Purpose **72–** 26
4.3 Equipment and Personnel **72–** 26
4.4 System Fundamentals **72–** 26
4.5 Documentation **72–** 32
4.6 Impairments **72–** 38
4.7 Mass Notification Systems **72–** 38

Chapter 5 Initiating Devices **72–** 38
5.1 Application **72–** 38
5.2 Purpose **72–** 38
5.3 Performance-Based Design **72–** 38
5.4 General Requirements **72–** 38
5.5 Requirements for Smoke and Heat Detectors **72–** 38
5.6 Heat-Sensing Fire Detectors **72–** 39
5.7 Smoke-Sensing Fire Detectors **72–** 40
5.8 Radiant Energy–Sensing Fire Detectors .. **72–** 44
5.9 Combination, Multi-Criteria, and Multi-Sensor Detectors **72–** 45
5.10 Other Fire Detectors **72–** 45
5.11 Sprinkler Waterflow Alarm-Initiating Devices **72–** 45
5.12 Detection of the Operation of Other Automatic Extinguishing Systems **72–** 45
5.13 Manually Actuated Alarm-Initiating Devices **72–** 45
5.14 Fire Extinguisher Monitoring Device **72–** 46
5.15 Supervisory Signal-Initiating Devices **72–** 46
5.16 Smoke Detectors for Control of Smoke Spread **72–** 46
5.17 Mass Notification Systems **72–** 49

Chapter 6 Protected Premises Fire Alarm Systems **72–** 49
6.1 Application **72–** 49
6.2 General **72–** 49
6.3 System Features **72–** 49
6.4 System Performance and Integrity **72–** 49
6.5 Performance of Initiating Device Circuits (IDCs) **72–** 50
6.6 Performance of Signaling Line Circuits (SLC) **72–** 50
6.7 Performance of Notification Appliance Circuits (NACs) **72–** 50
6.8 System Requirements **72–** 50
6.9 Emergency Voice/Alarm Communications **72–** 55
6.10 Two-Way Communication Service. **72–** 56
6.11 Signal Annunciation **72–** 57
6.12 Suppression System Actuation **72–** 57
6.13 Off-Premises Signals **72–** 57
6.14 Guard's Tour Supervisory Service **72–** 57
6.15 Suppressed (Exception Reporting) Signal System **72–** 57
6.16 Protected Premises Fire Safety Functions **72–** 57
6.17 Special Requirements for Low-Power Radio (Wireless) Systems **72–** 60
6.18 Mass Notification Systems **72–** 61

Chapter 7 Notification Appliances for Fire Alarm Systems **72–** 61
7.1 Application **72–** 61
7.2 Purpose **72–** 61
7.3 General **72–** 61
7.4 Audible Characteristics **72–** 61
7.5 Visible Characteristics — Public Mode **72–** 63
7.6 Visible Characteristics — Private Mode ... **72–** 65
7.7 Supplementary Visible Signaling Method **72–** 65
7.8 Textual Audible Appliances **72–** 65
7.9 Textual Visible Appliances **72–** 65
7.10 Tactile Appliances **72–** 66
7.11 Standard Emergency Service Interface **72–** 66
7.12 Mass Notification Systems **72–** 66

Chapter 8 Supervising Station Fire Alarm Systems **72–** 66
8.1 Application **72–** 66
8.2 General **72–** 66
8.3 Fire Alarm Systems for Central Station Service **72–** 66
8.4 Proprietary Supervising Station Systems **72–** 68
8.5 Remote Supervising Station Fire Alarm Systems **72–** 71

Copyright National Fire Protection Association
Provided by IHS under license with NFPA
No reproduction or networking permitted without license from IHS
Not for Resale

8.6 Communications Methods for Supervising Station Fire Alarm Systems 72– 72
8.7 Mass Notification Systems 72– 82

Chapter 9 Public Fire Alarm Reporting Systems ... 72– 82
9.1 Application 72– 82
9.2 General Fundamentals 72– 82
9.3 Management and Maintenance 72– 82
9.4 Alarm Transmission Equipment (Publicly Accessible Fire Alarm Boxes, Auxiliary Boxes, and Master Boxes). 72– 83
9.5 Alarm-Receiving Equipment at Public Fire Service Communications Center 72– 86
9.6 Remote Receiving Equipment — Facilities for Receipt of Box Alarms at a Remote Communications Center 72– 89
9.7 Public Cable Plant 72– 90
9.8 Mass Notification System 72– 92

Chapter 10 Inspection, Testing, and Maintenance 72– 92
10.1 Application 72– 92
10.2 General 72– 92
10.3 Inspection 72– 93
10.4 Testing 72– 95
10.5 Maintenance 72–109
10.6 Records 72–109
10.7 Mass Notification Systems 72–114

Chapter 11 Single- and Multiple-Station Alarms and Household Fire Alarm Systems 72–114
11.1 Application 72–114
11.2 Purpose 72–114
11.3 Basic Requirements 72–114
11.4 Assumptions 72–114
11.5 Detection and Notification 72–115
11.6 Power Supplies 72–115
11.7 Equipment Performance 72–116
11.8 Installation 72–118
11.9 Optional Functions 72–119
11.10 Maintenance and Tests 72–119
11.11 Markings and Instructions 72–119
11.12 Mass Notification Systems 72–119

Annex A Explanatory Material 72–119

Annex B Engineering Guide for Automatic Fire Detector Spacing 72–188

Annex C Wiring Diagrams and Guide for Testing Fire Alarm Circuits 72–224

Annex D Sample Ordinance Adopting *NFPA 72* 72–232

Annex E Mass Notification Systems 72–233

Annex F NEMA SB 30, *Fire Service Annunciator and Interface* 72–238

Annex G Informational References 72–246

Annex H Cross-Reference Table 72–249

Index 72–259

Copyright National Fire Protection Association
Provided by IHS under license with NFPA
No reproduction or networking permitted without license from IHS
Not for Resale

NFPA 72®

National Fire Alarm Code®

2007 Edition

IMPORTANT NOTE: This NFPA document is made available for use subject to important notices and legal disclaimers. These notices and disclaimers appear in all publications containing this document and may be found under the heading "Important Notices and Disclaimers Concerning NFPA Documents." They can also be obtained on request from NFPA or viewed at www.nfpa.org/disclaimers.

NOTICE: An asterisk (*) following the number or letter designating a paragraph indicates that explanatory material on the paragraph can be found in Annex A.

Changes other than editorial are indicated by a vertical rule beside the paragraph, table, or figure in which the change occurred. These rules are included as an aid to the user in identifying changes from the previous edition. Where one or more complete paragraphs have been deleted, the deletion is indicated by a bullet (•) between the paragraphs that remain.

A reference in brackets [ ] following a section or paragraph indicates material that has been extracted from another NFPA document. As an aid to the user, the complete title and edition of the source documents for extracts in mandatory sections of the document are given in Chapter 2 and those for extracts in informational sections are given in Annex G. Editorial changes to extracted material consist of revising references to an appropriate division in this document or the inclusion of the document number with the division number when the reference is to the original document. Requests for interpretations or revisions of extracted text shall be sent to the technical committee responsible for the source document.

Information on referenced publications can be found in Chapter 2 and Annex G.

Chapter 1 Administration

1.1 Scope.

1.1.1 *NFPA 72* covers the application, installation, location, performance, inspection, testing, and maintenance of fire alarm systems, fire warning equipment and emergency warning equipment, and their components.

1.1.2 The provisions of this chapter apply throughout the Code unless otherwise noted.

1.2* Purpose.

1.2.1 The purpose of this Code is to define the means of signal initiation, transmission, notification, and annunciation; the levels of performance; and the reliability of the various types of fire alarm systems.

1.2.2 This Code defines the features associated with these systems and also provides information necessary to modify or upgrade an existing system to meet the requirements of a particular system classification.

1.2.3 This Code establishes minimum required levels of performance, extent of redundancy, and quality of installation but does not establish the only methods by which these requirements are to be achieved.

1.2.4* This Code shall not be interpreted to require a level of fire protection that is greater than that which would otherwise be required by the applicable building or fire code.

1.3 Application.

1.3.1 Fire alarm systems shall be classified as follows:

(1) Household fire alarm systems
(2) Protected premises (local) fire alarm systems
(3) Supervising station fire alarm systems
    (a) Central station (service) fire alarm systems
    (b) Remote supervising station fire alarm systems
    (c) Proprietary supervising station fire alarm systems
(4) Public fire alarm reporting systems
    (a) Auxiliary fire alarm systems — local energy type
    (b) Auxiliary fire alarm systems — shunt type

1.3.2 Any reference or implied reference to a particular type of hardware shall be for the purpose of clarity and shall not be interpreted as an endorsement.

1.3.3 The intent and meaning of the terms used in this Code shall be, unless otherwise defined herein, the same as those of NFPA 70, *National Electrical Code®*.

1.4 Retroactivity.

1.4.1 Unless otherwise noted, it is not intended that the provisions of this document be applied to facilities, equipment, structures, or installations that were existing or approved for construction or installation prior to the effective date of the document.

1.4.2 In those cases where it is determined by the authority having jurisdiction that the existing situation involves a distinct hazard to life or property, retroactive application of the provisions of this document shall be permitted.

1.5 Equivalency.

1.5.1 Nothing in this Code shall prevent the use of systems, methods, devices, or appliances of equivalent or superior quality, strength, fire resistance, effectiveness, durability, and safety over those prescribed by this Code.

1.5.2 Technical documentation shall be submitted to the authority having jurisdiction to demonstrate equivalency.

1.5.3 The systems, methods, devices, or appliances that are found equivalent shall be approved.

1.6 Units and Formulas.

1.6.1 The units of measure in this Code are presented in the International System (SI) of units. Where presented, U.S. customary units (inch-pound units) follow the SI units in parentheses.

1.6.2 Where both systems of units are presented, either system shall be acceptable for satisfying the requirements in this Code.

1.6.3 Where both systems of units are presented, users of this Code shall apply one set of units consistently and shall not alternate between units.

1.6.4* The values presented for measurements in this Code are expressed with a degree of precision appropriate for practical application and enforcement. It is not intended that the application or enforcement of these values be more precise than the precision expressed.

Copyright National Fire Protection Association
Provided by IHS under license with NFPA
No reproduction or networking permitted without license from IHS
Not for Resale

1.6.5 Where extracted text contains values expressed in only one system of units, the values in the extracted text have been retained without conversion to preserve the values established by the responsible technical committee in the source document.

1.7 Code Adoption Requirements. This Code shall be administered and enforced by the authority having jurisdiction designated by the governing authority. *(See Annex D for sample wording for enabling legislation.)*

Chapter 2 Referenced Publications

2.1 General. The documents or portions thereof listed in this chapter are referenced within this code and shall be considered part of the requirements of this document.

2.2 NFPA Publications. National Fire Protection Association, 1 Batterymarch Park, Quincy, MA 02169-7471.

NFPA 10, *Standard for Portable Fire Extinguishers,* 2007 edition.

NFPA 11, *Standard for Low-, Medium-, and High-Expansion Foam,* 2005 edition.

NFPA 13, *Standard for the Installation of Sprinkler Systems,* 2007 edition.

NFPA 25, *Standard for the Inspection, Testing, and Maintenance of Water-Based Fire Protection Systems,* 2002 edition.

NFPA 37, *Standard for the Installation and Use of Stationary Combustion Engines and Gas Turbines,* 2006 edition.

NFPA 70, *National Electrical Code®,* 2005 edition.

NFPA 75, *Standard for the Protection of Information Technology Equipment,* 2003 edition.

NFPA 90A, *Standard for the Installation of Air-Conditioning and Ventilating Systems,* 2002 edition.

NFPA 110, *Standard for Emergency and Standby Power Systems,* 2005 edition.

NFPA 111, *Standard on Stored Electrical Energy Emergency and Standby Power Systems,* 2005 edition.

NFPA 601, *Standard for Security Services in Fire Loss Prevention,* 2005 edition.

NFPA 780, *Standard for the Installation of Lightning Protection Systems,* 2004 edition.

NFPA 1221, *Standard for the Installation, Maintenance, and Use of Emergency Services Communications Systems,* 2007 edition.

2.3 Other Publications.

2.3.1 ANSI Publications. American National Standards Institute, Inc., 25 West 43rd Street, 4th Floor, New York, NY 10036.

ANSI A-58.1, *Building Code Requirements for Minimum Design Loads in Buildings and Other Structures.*

ANSI S1.4a, *Specifications for Sound Level Meters*, 1985.

ANSI S3.2, *Method for Measuring the Intelligibility of Speech Over Communications Systems*, 1995.

ANSI S3.41, *American National Standard Audible Emergency Evacuation Signal*, 1996.

ANSI/ASME A17.1, *Safety Code for Elevators and Escalators*, 2004, 2005 Addendum, and 2005 Supplement.

ANSI/IEEE C2, *National Electrical Safety Code*, 2007.

ANSI/UL 217, *Standard for Safety Single and Multiple Station Smoke Alarms*, 1997, revised January 2004.

ANSI/UL 268, *Standard for Safety Smoke Detectors for Fire Alarm Signaling Systems*, 1996, revised October 2003.

ANSI/UL 827, *Standard for Safety Central-Station Alarm Services*, 1996, revised April 1999.

ANSI/UL 985, *Standard for Safety Household Fire Warning System Units*, 2000, revised April 2004.

ANSI/UL 1730, *Standard for Safety for Smoke Detector Monitors and Accessories for Individual Living Units of Multifamily Residences and Hotel/Motel Rooms*, 1998, revised May 1999.

ANSI/UL 1971, *Standard for Safety Signaling Devices for Hearing Impaired*, 2002, revised May 2004.

2.3.2 EIA Publication. Electronic Industries Alliance, 2500 Wilson Boulevard, Arlington, VA 22201-3834.

EIA Tr 41.3, *Telephones.*

2.3.3 IEC Publications. International Electrotechnical Commission, 3 rue de Varembé, P.O. Box 131, CH-1211 Geneva 20, Switzerland. IEC documents are available through ANSI.

IEC 60849, *Sound systems for emergency purposes*, second edition, 1998.

IEC 61260, *Electroacoustics — Octave-Band and Fractional-Octave-Band Filters*, 1995.

2.3.4 Other Publications.

Merriam-Webster's Collegiate Dictionary, 11th edition, Merriam-Webster, Inc., Springfield, MA, 2003

2.4 References for Extracts in Mandatory Sections.

NFPA *101®*, *Life Safety Code®*, 2006 edition.

NFPA 654, *Standard for the Prevention of Fire and Dust Explosions from the Manufacturing, Processing, and Handling of Combustible Particulate Solids,* 2006 edition.

NFPA 720, *Standard for the Installation of Carbon Monoxide (CO) Warning Equipment in Dwelling Units,* 2005 edition.

Chapter 3 Definitions

3.1 General. The definitions contained in this chapter shall apply to the terms used in this code. Where terms are not defined in this chapter or within another chapter, they shall be defined using their ordinarily accepted meanings within the context in which they are used. *Merriam-Webster's Collegiate Dictionary*, 11th edition, shall be the source for the ordinarily accepted meaning.

3.2 NFPA Official Definitions.

3.2.1* Approved. Acceptable to the authority having jurisdiction.

3.2.2* Authority Having Jurisdiction (AHJ). An organization, office, or individual responsible for enforcing the requirements of a code or standard, or for approving equipment, materials, an installation, or a procedure.

3.2.3* Code. A standard that is an extensive compilation of provisions covering broad subject matter or that is suitable for adoption into law independently of other codes and standards.

3.2.4 Labeled. Equipment or materials to which has been attached a label, symbol, or other identifying mark of an organization that is acceptable to the authority having jurisdiction

Copyright National Fire Protection Association
Provided by IHS under license with NFPA
No reproduction or networking permitted without license from IHS
Not for Resale

and concerned with product evaluation, that maintains periodic inspection of production of labeled equipment or materials, and by whose labeling the manufacturer indicates compliance with appropriate standards or performance in a specified manner.

3.2.5* Listed. Equipment, materials, or services included in a list published by an organization that is acceptable to the authority having jurisdiction and concerned with evaluation of products or services, that maintains periodic inspection of production of listed equipment or materials or periodic evaluation of services, and whose listing states that either the equipment, material, or service meets appropriate designated standards or has been tested and found suitable for a specified purpose.

3.2.6 Shall. Indicates a mandatory requirement.

3.2.7 Should. Indicates a recommendation or that which is advised but not required.

3.3 General Definitions.

3.3.1 Acknowledge. To confirm that a message or signal has been received, such as by the pressing of a button or the selection of a software command. (SIG-SSS)

3.3.2 Active Multiplex System. A multiplexing system in which signaling devices such as transponders are employed to transmit status signals of each initiating device or initiating device circuit within a prescribed time interval so that the lack of receipt of such a signal can be interpreted as a trouble signal. (SIG-SSS)

3.3.3 Addressable Device. A fire alarm system component with discrete identification that can have its status individually identified or that is used to individually control other functions. (SIG-IDS)

3.3.4 Adverse Condition. Any condition occurring in a communications or transmission channel that interferes with the proper transmission or interpretation, or both, of status change signals at the supervising station. *(See also 3.3.172.7, Trouble Signal.)* (SIG-SSS)

3.3.5 Alarm. A warning of danger. (SIG-FUN)

3.3.5.1 ***Nuisance Alarm.*** Any alarm caused by mechanical failure, malfunction, improper installation, or lack of proper maintenance, or any alarm activated by a cause that cannot be determined. (SIG-FUN)

3.3.6 Alarm Service. The service required following the receipt of an alarm signal. (SIG-SSS)

3.3.7 Alarm Signal. See 3.3.172, Signal.

3.3.8 Alarm Verification Feature. A feature of automatic fire detection and alarm systems to reduce unwanted alarms wherein smoke detectors report alarm conditions for a minimum period of time, or confirm alarm conditions within a given time period after being reset, in order to be accepted as a valid alarm initiation signal. (SIG-PRO)

3.3.9 Alert Tone. An attention-getting signal to alert occupants of the pending transmission of a voice message. (SIG-PRO)

3.3.10 Analog Initiating Device (Sensor). See 3.3.89, Initiating Device.

3.3.11 Annunciator. A unit containing one or more indicator lamps, alphanumeric displays, or other equivalent means in which each indication provides status information about a circuit, condition, or location. (SIG-FUN)

3.3.12 Apartment Building. A building or portion thereof containing three or more dwelling units with independent cooking and bathroom facilities. (SIG-HOU)

3.3.13 Audible Notification Appliance. See 3.3.113, Notification Appliance.

3.3.14 Automatic Extinguishing System Supervisory Device. See 3.3.89, Initiating Device.

3.3.15 Automatic Fire Detector. See 3.3.43, Detector.

3.3.16 Auxiliary Box. See 3.3.63, Fire Alarm Box.

3.3.17 Auxiliary Fire Alarm System. See 3.3.67, Fire Alarm System.

3.3.18* Average Ambient Sound Level. The root mean square, A-weighted, sound pressure level measured over the period of time that any person is present, or a 24-hour period, whichever time period is the lesser. (SIG-NAS)

3.3.19 Beam Construction. See 3.3.24, Ceiling Surfaces.

3.3.20 Carrier. High-frequency energy that can be modulated by voice or signaling impulses. (SIG-SSS)

3.3.21 Carrier System. A means of conveying a number of channels over a single path by modulating each channel on a different carrier frequency and demodulating at the receiving point to restore the signals to their original form. (SIG-SSS)

3.3.22 Ceiling. The upper surface of a space, regardless of height. Areas with a suspended ceiling have two ceilings, one visible from the floor and one above the suspended ceiling. (SIG-IDS)

3.3.22.1 ***Level Ceilings.*** Ceilings that are level or have a slope of less than or equal to 1 in 8. (SIG-IDS)

3.3.22.2 ***Sloping Ceiling.*** A ceiling that has a slope of more than 1 in 8. (SIG-IDS)

3.3.22.3* ***Sloping Peaked-Type Ceiling.*** A ceiling in which the ceiling slopes in two directions from the highest point. Curved or domed ceilings can be considered peaked with the slope figured as the slope of the chord from highest to lowest point. (SIG-IDS)

3.3.22.4* ***Sloping Shed-Type Ceiling.*** A ceiling in which the high point is at one side with the slope extending toward the opposite side. (SIG-IDS)

3.3.23 Ceiling Height. The height from the continuous floor of a room to the continuous ceiling of a room or space. (SIG-IDS)

3.3.24 Ceiling Surfaces.

3.3.24.1 ***Beam Construction.*** Ceilings that have solid structural or solid nonstructural members projecting down from the ceiling surface more than 100 mm (4 in.) and spaced more than 0.9 m (3 ft), center to center. (SIG-IDS)

3.3.24.2 ***Girder.*** A support for beams or joists that runs at right angles to the beams or joists. If the top of the girder is within 100 mm (4 in.) of the ceiling, the girder is a factor in determining the number of detectors and is to be considered a beam. If the top of the girder is more than 100 mm (4 in.) from the ceiling, the girder is not a factor in detector location. (SIG-IDS)

3.3.24.3* ***Smooth Ceiling.*** A ceiling surface uninterrupted by continuous projections, such as solid joists, beams, or

Copyright National Fire Protection Association
Provided by IHS under license with NFPA
No reproduction or networking permitted without license from IHS
Not for Resale

ducts, extending more than 100 mm (4 in.) below the ceiling surface. (SIG-IDS)

3.3.24.4 ***Solid Joist Construction.*** Ceilings that have solid structural or solid nonstructural members projecting down from the ceiling surface for a distance of more than 100 mm (4 in.) and spaced at intervals of 0.9 m (3 ft) or less, center to center. (SIG-IDS)

3.3.25 Central Station. See 3.3.194, Supervising Station.

3.3.26 Central Station Fire Alarm System. See 3.3.67, Fire Alarm System.

3.3.27 Central Station Service. See 3.3.195, Supervising Station Service.

3.3.28 Central Supervising Station. See 3.3.194, Supervising Station.

3.3.29* Certification of Personnel. A formal program of related instruction and testing as provided by a recognized organization or the authority having jurisdiction. (SIG-FUN)

3.3.30 Channel. A path for voice or signal transmission that uses modulation of light or alternating current within a frequency band. (SIG-SSS)

3.3.30.1 ***Communications Channel.*** A circuit or path connecting a subsidiary station(s) to a supervising station(s) over which signals are carried. (SIG-SSS)

3.3.30.2 ***Derived Channel.*** A signaling line circuit that uses the local leg of the public switched network as an active multiplex channel while simultaneously allowing that leg's use for normal telephone communications. (SIG-SSS)

3.3.30.3* ***Radio Channel.*** A band of frequencies of a width sufficient to allow its use for radio communications. (SIG-SSS)

3.3.30.4 ***Transmission Channel.*** A circuit or path connecting transmitters to supervising stations or subsidiary stations on which signals are carried. (SIG-SSS)

3.3.31 Circuit Interface. A circuit component that interfaces initiating devices or control circuits, or both; notification appliances or circuits, or both; system control outputs; and other signaling line circuits to a signaling line circuit. (SIG-PRO)

3.3.32 Cloud Chamber Smoke Detection. See 3.3.181, Smoke Detection.

3.3.33 Coded. An audible or visible signal that conveys several discrete bits or units of information. Notification signal examples are numbered strokes of an impact-type appliance and numbered flashes of a visible appliance. (SIG-NAS)

3.3.34 Combination Detector. See 3.3.43, Detector.

3.3.35 Combination Fire Alarm and Guard's Tour Box. See 3.3.63, Fire Alarm Box.

3.3.36 Combination System. See 3.3.67, Fire Alarm System.

3.3.37 Compatibility Listed. A specific listing process that applies only to two-wire devices, such as smoke detectors, that are designed to operate with certain control equipment. (SIG-FUN)

3.3.38 Contiguous Property. See 3.3.138, Property.

3.3.39 Control Unit. A system component that monitors inputs and controls outputs through various types of circuits. *(See also 3.3.64, Fire Alarm Control Unit.)* (SIG-PRO)

3.3.39.1 ***Wireless Control Unit.*** A component that transmits/receives and processes wireless signals. (SIG-PRO)

3.3.40 Day-Care Home. A building or portion of a building in which more than three but not more than 12 clients receive care, maintenance, and supervision, by other than their relative(s) or legal guardians(s), for less than 24 hours per day. [***101,*** 2006] (SIG-HOU)

3.3.41 Delinquency Signal. See 3.3.172, Signal.

3.3.42 Derived Channel. See 3.3.30, Channel.

3.3.43 Detector. A device suitable for connection to a circuit that has a sensor that responds to a physical stimulus such as heat or smoke. (SIG-IDS)

3.3.43.1 ***Air Sampling–Type Detector.*** A detector that consists of a piping or tubing distribution network that runs from the detector to the area(s) to be protected. An aspiration fan in the detector housing draws air from the protected area back to the detector through air sampling ports, piping, or tubing. At the detector, the air is analyzed for fire products. (SIG-IDS)

3.3.43.2 ***Automatic Fire Detector.*** A device designed to detect the presence of a fire signature and to initiate action. For the purpose of this Code, automatic fire detectors are classified as follows: Automatic Fire Extinguishing or Suppression System Operation Detector, Fire–Gas Detector, Heat Detector, Other Fire Detectors, Radiant Energy–Sensing Fire Detector, Smoke Detector. (SIG-IDS)

3.3.43.3 ***Automatic Fire Extinguishing or Suppression System Operation Detector.*** A device that automatically detects the operation of a fire extinguishing or suppression system by means appropriate to the system employed. (SIG-IDS)

3.3.43.4* ***Combination Detector.*** A device that either responds to more than one of the fire phenomena or employs more than one operating principle to sense one of these phenomena. Typical examples are a combination of a heat detector with a smoke detector or a combination rate-of-rise and fixed-temperature heat detector. This device has listings for each sensing method employed. (SIG-IDS)

3.3.43.5 ***Electrical Conductivity Heat Detector.*** A line-type or spot-type sensing element in which resistance varies as a function of temperature. (SIG-IDS)

3.3.43.6 ***Fire–Gas Detector.*** A device that detects gases produced by a fire. (SIG-IDS)

3.3.43.7* ***Fixed-Temperature Detector.*** A device that responds when its operating element becomes heated to a predetermined level. (SIG-IDS)

3.3.43.8* ***Flame Detector.*** A radiant energy–sensing fire detector that detects the radiant energy emitted by a flame. *(Refer to A.5.8.2.)* (SIG-IDS)

3.3.43.9 ***Heat Detector.*** A fire detector that detects either abnormally high temperature or rate of temperature rise, or both. (SIG-IDS)

3.3.43.10 ***Line-Type Detector.*** A device in which detection is continuous along a path. Typical examples are rate-of-rise pneumatic tubing detectors, projected beam smoke detectors, and heat-sensitive cable. (SIG-IDS)

3.3.43.11* ***Multi-Criteria Detector.*** A device that contains multiple sensors that separately respond to physical stimulus

Copyright National Fire Protection Association
Provided by IHS under license with NFPA
No reproduction or networking permitted without license from IHS
Not for Resale

such as heat, smoke, or fire gases, or employs more than one sensor to sense the same stimulus. This sensor is capable of generating only one alarm signal from the sensors employed in the design either independently or in combination. The sensor output signal is mathematically evaluated to determine when an alarm signal is warranted. The evaluation can be performed either at the detector or at the control unit. This detector has a single listing that establishes the primary function of the detector. (SIG-IDS)

3.3.43.12* ***Multi-Sensor Detector.*** A device that contains multiple sensors that separately respond to physical stimulus such as heat, smoke, or fire gases, or employs more than one sensor to sense the same stimulus. A device capable of generating multiple alarm signals from any one of the sensors employed in the design, independently or in combination. The sensor output signals are mathematically evaluated to determine when an alarm signal is warranted. The evaluation can be performed either at the detector or at the control unit. This device has listings for each sensing method employed. (SIG-IDS)

3.3.43.13 ***Other Fire Detectors.*** Devices that detect a phenomenon other than heat, smoke, flame, or gases produced by a fire. (SIG-IDS)

3.3.43.14 ***Pneumatic Rate-of-Rise Tubing Heat Detector.*** A line-type detector comprising small-diameter tubing, usually copper, that is installed on the ceiling or high on the walls throughout the protected area. The tubing is terminated in a detector unit containing diaphragms and associated contacts set to actuate at a predetermined pressure. The system is sealed except for calibrated vents that compensate for normal changes in temperature. (SIG-IDS)

3.3.43.15 ***Projected Beam–Type Detector.*** A type of photoelectric light obscuration smoke detector wherein the beam spans the protected area. (SIG-IDS)

3.3.43.16 ***Radiant Energy–Sensing Fire Detector.*** A device that detects radiant energy, such as ultraviolet, visible, or infrared, that is emitted as a product of combustion reaction and obeys the laws of optics. (SIG-IDS)

3.3.43.17* ***Rate Compensation Detector.*** A device that responds when the temperature of the air surrounding the device reaches a predetermined level, regardless of the rate of temperature rise. (SIG-IDS)

3.3.43.18* ***Rate-of-Rise Detector.*** A device that responds when the temperature rises at a rate exceeding a predetermined value. (SIG-IDS)

3.3.43.19 ***Smoke Detector.*** A device that detects visible or invisible particles of combustion. (SIG-IDS)

3.3.43.20 ***Spark/Ember Detector.*** A radiant energy–sensing fire detector that is designed to detect sparks or embers, or both. These devices are normally intended to operate in dark environments and in the infrared part of the spectrum. (SIG-IDS)

3.3.43.21 ***Spot-Type Detector.*** A device in which the detecting element is concentrated at a particular location. Typical examples are bimetallic detectors, fusible alloy detectors, certain pneumatic rate-of-rise detectors, certain smoke detectors, and thermoelectric detectors. (SIG-IDS)

3.3.44 Digital Alarm Communicator Receiver (DACR). A system component that accepts and displays signals from digital alarm communicator transmitters (DACTs) sent over the public switched telephone network. (SIG-SSS)

3.3.45 Digital Alarm Communicator System (DACS). A system in which signals are transmitted from a digital alarm communicator transmitter (DACT) located at the protected premises through the public switched telephone network to a digital alarm communicator receiver (DACR). (SIG-SSS)

3.3.46 Digital Alarm Communicator Transmitter (DACT). A system component at the protected premises to which initiating devices or groups of devices are connected. The DACT seizes the connected telephone line, dials a preselected number to connect to a DACR, and transmits signals indicating a status change of the initiating device. (SIG-SSS)

3.3.47 Digital Alarm Radio Receiver (DARR). A system component composed of two subcomponents: one that receives and decodes radio signals, the other that annunciates the decoded data. These two subcomponents can be coresident at the central station or separated by means of a data transmission channel. (SIG-SSS)

3.3.48 Digital Alarm Radio System (DARS). A system in which signals are transmitted from a digital alarm radio transmitter (DART) located at a protected premises through a radio channel to a digital alarm radio receiver (DARR). (SIG-SSS)

3.3.49 Digital Alarm Radio Transmitter (DART). A system component that is connected to or an integral part of a digital alarm communicator transmitter (DACT) that is used to provide an alternate radio transmission channel. (SIG-SSS)

3.3.50 Display. The visual representation of output data, other than printed copy. (SIG-NAS)

3.3.51 Dormitory. A building or a space in a building in which group sleeping accommodations are provided for more than 16 persons who are not members of the same family in one room, or a series of closely associated rooms, under joint occupancy and single management, with or without meals, but without individual cooking facilities. [***101***, 2006] (SIG-HOU)

3.3.52* Double Doorway. A single opening that has no intervening wall space or door trim separating the two doors. (SIG-IDS)

3.3.53 Dual Control. The use of two primary trunk facilities over separate routes or different methods to control one communications channel. (SIG-SSS)

3.3.54 Dwelling Unit. One or more rooms arranged for the use of one or more individuals living together, providing complete, independent living facilities, including permanent provisions for living, sleeping, eating, cooking, and sanitation. (SIG-HOU)

3.3.54.1 ***Multiple Dwelling Unit.*** A building containing three or more dwelling units. (SIG-HOU)

3.3.54.2 ***Single Dwelling Unit.*** A building consisting solely of one dwelling unit. (SIG-HOU)

3.3.55 Effective Masked Threshold. The minimum sound level at which the tone signal is audible in ambient noise. (SIG-NAS)

3.3.56* Ember. A particle of solid material that emits radiant energy due either to its temperature or the process of combustion on its surface. *(See also 3.3.186, Spark.)* (SIG-IDS)

3.3.57 Emergency Voice/Alarm Communications. Dedicated manual or automatic equipment for originating and distributing voice instructions, as well as alert and evacuation signals

--`,,```,,,````-`-`,,`,,`,`,,`---

Copyright National Fire Protection Association
Provided by IHS under license with NFPA
No reproduction or networking permitted without license from IHS

Not for Resale

pertaining to a fire emergency, to the occupants of a building. (SIG-PRO)

3.3.58* Evacuation. The withdrawal of occupants from a building. (SIG-PRO)

3.3.59 Evacuation Signal. See 3.3.172, Signal.

3.3.60 Evacuation Signaling Zone. See 3.3.218, Zone.

3.3.61 Exit Plan. A plan for the emergency evacuation of the premises. (SIG-FUN)

3.3.62 Field of View. The solid cone that extends out from the detector within which the effective sensitivity of the detector is at least 50 percent of its on-axis, listed, or approved sensitivity. (SIG-IDS)

3.3.63 Fire Alarm Box.

3.3.63.1 ***Auxiliary Box.*** A fire alarm box that can only be operated from one or more remote initiating devices or an auxiliary fire alarm system used to send an alarm to the public fire service communications center. (SIG-PRS)

3.3.63.2 ***Combination Fire Alarm and Guard's Tour Box.*** A manually operated box for separately transmitting a fire alarm signal and a distinctive guard patrol tour supervisory signal. (SIG-IDS)

3.3.63.3 ***Manual Fire Alarm Box.*** A manually operated device used to initiate an alarm signal. (SIG-IDS)

3.3.63.4 ***Master Box.*** A publicly accessible fire alarm box that can also be operated by one or more remote initiating devices or an auxiliary fire alarm system used to send an alarm to the public fire service communications center. (SIG-PRS)

3.3.63.5 ***Publicly Accessible Fire Alarm Box.*** An enclosure, accessible to the public, housing a manually operated transmitter used to send an alarm to the public fire service communications center. (SIG-PRS)

3.3.64* Fire Alarm Control Unit. A component of the fire alarm system, provided with primary and secondary power sources, which receives signals from initiating devices or other fire alarm control units, and processes these signals to determine part or all of the required fire alarm system output function(s). (SIG-PRO)

3.3.64.1 ***Master Fire Alarm Control Unit.*** A fire alarm control unit that serves the protected premises or portion of the protected premises as a local fire alarm control unit and accepts inputs from other fire alarm control units. (SIG-PRO)

3.3.64.2 ***Protected Premises (Local) Control Unit.*** A fire alarm control unit that serves the protected premises or a portion of the protected premises. (SIG-PRO)

3.3.64.2.1 ***Dedicated Function Fire Alarm Control Unit.*** A protected premises fire alarm control unit which is intended to provide operation of a specifically identified fire safety function, such as sprinkler alarm and supervisory control unit or an elevator recall control and supervisory control unit. (SIG-PRO)

3.3.64.2.2 ***Releasing Service Fire Alarm Control Unit.*** A protected premises fire alarm control unit specifically listed for releasing service that is part of a fire suppression system and which provides control outputs to release a fire suppression agent based on either automatic or manual input. (SIG-PRO)

3.3.65 Fire Alarm/Evacuation Signal Tone Generator. A device that produces a fire alarm/evacuation tone upon command. (SIG-PRO)

3.3.66 Fire Alarm Signal. See 3.3.172, Signal.

3.3.67 Fire Alarm System. A system or portion of a combination system that consists of components and circuits arranged to monitor and annunciate the status of fire alarm or supervisory signal-initiating devices and to initiate the appropriate response to those signals. (SIG-FUN)

3.3.67.1* *Auxiliary Fire Alarm System.* A system used to connect a protected premises fire alarm system to a public fire alarm reporting system for transmitting an alarm to the public fire service communications center. (SIG-PRS)

3.3.67.1.1 ***Local Energy Type Auxiliary Fire Alarm System.*** An auxiliary system that employs a locally complete arrangement of parts, initiating devices, relays, power supply, and associated components to automatically activate a master box or auxiliary box over circuits that are electrically isolated from the public fire alarm reporting system circuits. (SIG-PRS)

3.3.67.1.2 ***Shunt-Type Auxiliary Fire Alarm System.*** An auxiliary system electrically connected to the public fire alarm reporting system extending a public fire alarm reporting circuit to interconnect initiating devices within a protected premises, which, when operated, opens the public fire alarm reporting circuit shunted around the trip coil of the master box or auxiliary box. The master box or auxiliary box is thereupon energized to start transmission without any assistance from a local source of power. (SIG-PRS)

3.3.67.2* *Combination System.* A fire alarm system in which components are used, in whole or in part, in common with a non-fire signaling system. (SIG-PRO)

3.3.67.3 ***Household Fire Alarm System.*** A system of devices that uses a fire alarm control unit to produce an alarm signal in the household for the purpose of notifying the occupants of the presence of a fire so that they will evacuate the premises. (SIG-HOU)

3.3.67.4 ***Municipal Fire Alarm System.*** A public fire alarm reporting system. (SIG-PRS)

3.3.67.5* *Protected Premises (Local) Fire Alarm System.* A fire alarm system located at the protected premises. (SIG-PRO)

3.3.67.5.1 ***Building Fire Alarm System.*** A protected premises fire alarm system that includes any of the features identified in 6.3.3.1 and that serves the general fire alarm needs of a building or buildings and that provides fire department or occupant notification or both. (SIG-PRO)

3.3.67.5.2 ***Dedicated Function Fire Alarm System.*** A protected premises fire alarm system installed specifically to perform fire safety function(s) where a building fire alarm system is not required. (SIG-PRO)

3.3.67.5.3 ***Releasing Fire Alarm System.*** A protected premises fire alarm system that is part of a fire suppression system and/or which provides control inputs to a fire suppression system related to the fire suppression systems sequence of operations and outputs for other signaling and notification. (SIG-PRO)

3.3.67.6 ***Public Fire Alarm Reporting System.*** A system of alarm-initiating devices, receiving equipment, and communication infrastructure (other than a public telephone

Copyright National Fire Protection Association
Provided by IHS under license with NFPA
No reproduction or networking permitted without license from IHS
Not for Resale

network) used to transmit alarms to the public fire service communications center to provide any combination of manual or auxiliary fire alarm service. (SIG-PRS)

3.3.67.6.1 ***Type A Public Fire Alarm Reporting System.*** A system in which an alarm from a fire alarm box is received and is retransmitted to fire stations either manually or automatically. (SIG-PRS)

3.3.67.6.2 ***Type B Public Fire Alarm Reporting System.*** A system in which an alarm from a fire alarm box is automatically transmitted to fire stations and, if used, is transmitted to supplementary alerting devices. (SIG-PRS)

3.3.67.7 ***Supervising Station Fire Alarm Systems.***

3.3.67.7.1 ***Central Station Service Fire Alarm System.*** A system or group of systems in which the operations of circuits and devices are transmitted automatically to, recorded in, maintained by, and supervised from a listed central station that has competent and experienced servers and operators who, upon receipt of a signal, take such action as required by this Code. Such service is to be controlled and operated by a person, firm, or corporation whose business is the furnishing, maintaining, or monitoring of supervised fire alarm systems. (SIG-SSS)

3.3.67.7.2 ***Proprietary Supervising Station Fire Alarm System.*** An installation of fire alarm systems that serves contiguous and noncontiguous properties, under one ownership, from a proprietary supervising station located at the protected premises, or at one of multiple non-contiguous protected premises, at which trained, competent personnel are in constant attendance. This includes the protected premises fire alarm system(s): proprietary supervising station; power supplies; signal-initiating devices; initiating device circuits; signal notification appliances; equipment for the automatic, permanent visual recording of signals; and equipment for initiating the operation of emergency building control services. (SIG-SSS)

3.3.67.7.3 ***Remote Supervising Station Fire Alarm System.*** A protected premises fire alarm system (exclusive of any connected to a public fire reporting system) in which alarm, supervisory, or trouble signals are transmitted automatically to, recorded in, and supervised from a remote supervising station that has competent, and experienced servers and operators who, upon receipt of a signal, take such action as required by this Code. (SIG-SSS)

3.3.68 Fire Command Center. The principal attended or unattended location where the status of the detection, alarm communications, and control systems is displayed and from which the system(s) can be manually controlled. (SIG-PRO)

3.3.69 Fire Extinguisher Monitoring Device. A device connected to a control unit that monitors the fire extinguisher in accordance with the requirements of NFPA 10, *Standard for Portable Fire Extinguishers.* (SIG-IDS)

3.3.70 Fire Rating. The classification indicating in time (hours) the ability of a structure or component to withstand a standardized fire test. This classification does not necessarily reflect performance of rated components in an actual fire. (SIG-FUN)

3.3.71 Fire Safety Function Control Device. The fire alarm system component that directly interfaces with the control system that controls the fire safety function. (SIG-PRO)

3.3.72 Fire Safety Functions. Building and fire control functions that are intended to increase the level of life safety for occupants or to control the spread of the harmful effects of fire. (SIG-PRO)

3.3.73 Fire Warden. A building staff member or a tenant trained to perform assigned duties in the event of a fire emergency. (SIG-PRO)

3.3.74 Fire Warning Equipment. Any detector, alarm, device, or material related to single- and multiple-station alarms or household fire alarm systems. (SIG-HOU)

3.3.75 Fixed Temperature Detector. See 3.3.43, Detector.

3.3.76 Flame. A body or stream of gaseous material involved in the combustion process and emitting radiant energy at specific wavelength bands determined by the combustion chemistry of the fuel. In most cases, some portion of the emitted radiant energy is visible to the human eye. (SIG-IDS)

3.3.77 Flame Detector. See 3.3.43, Detector.

3.3.78 Flame Detector Sensitivity. The distance along the optical axis of the detector at which the detector can detect a fire of specified size and fuel within a given time frame. (SIG-IDS)

3.3.79 Gateway. A device that is used in the transmission of serial data (digital or analog) from the fire alarm control unit to other building system control units, equipment, or networks and/or from other building system control units to the fire alarm control unit. (SIG-PRO)

3.3.80 Guard's Tour Reporting Station. A device that is manually or automatically initiated to indicate the route being followed and the timing of a guard's tour. (SIG-IDS)

3.3.81 Guard's Tour Supervisory Signal. See 3.3.172, Signal.

3.3.82 Guest Room. An accommodation combining living, sleeping, sanitary, and storage facilities within a compartment. [***101,*** 2006] (SIG-HOU)

3.3.83 Guest Suite. An accommodation with two or more contiguous rooms comprising a compartment, with or without doors between such rooms, that provides living, sleeping, sanitary, and storage facilities. [***101,*** 2006] (SIG-HOU)

3.3.84 Heat Alarm. A single or multiple station alarm responsive to heat. (SIG-IDS)

3.3.85 Heat Detector. See 3.3.43, Detector.

3.3.86 Hotel. A building or groups of buildings under the same management in which there are sleeping accommodations for more than 16 persons and primarily used by transients for lodging with or without meals. [***101,*** 2006] (SIG-HOU)

3.3.87 Household Fire Alarm System. See 3.3.67, Fire Alarm System.

3.3.88 Hunt Group. A group of associated telephone lines within which an incoming call is automatically routed to an idle (not busy) telephone line for completion. (SIG-SSS)

3.3.89 Initiating Device. A system component that originates transmission of a change-of-state condition, such as in a smoke detector, manual fire alarm box, or supervisory switch. (SIG-IDS)

3.3.89.1 ***Analog Initiating Device (Sensor).*** An initiating device that transmits a signal indicating varying degrees of condition as contrasted with a conventional initiating device, which can only indicate an on–off condition. (SIG-IDS)

--`,,```,,,,````-`-`,,`,,`,`,,`---
Copyright National Fire Protection Association
Provided by IHS under license with NFPA
No reproduction or networking permitted without license from IHS
Not for Resale

3.3.89.2 ***Automatic Extinguishing System Supervisory Device.*** A device that responds to abnormal conditions that could affect the proper operation of an automatic sprinkler system or other fire extinguishing system(s) or suppression system(s), including, but not limited to, control valves, pressure levels, liquid agent levels and temperatures, pump power and running, engine temperature and overspeed, and room temperature. (SIG-IDS)

3.3.89.3 ***Nonrestorable Initiating Device.*** A device in which the sensing element is designed to be destroyed in the process of operation. (SIG-IDS)

3.3.89.4 ***Restorable Initiating Device.*** A device in which the sensing element is not ordinarily destroyed in the process of operation, whose restoration can be manual or automatic. (SIG-IDS)

3.3.89.5 ***Supervisory Signal-Initiating Device.*** An initiating device such as a valve supervisory switch, water level indicator, or low air pressure switch on a dry-pipe sprinkler system in which the change of state signals an off-normal condition and its restoration to normal of a fire protection or life safety system; or a need for action in connection with guard tours, fire suppression systems or equipment, or maintenance features of related systems. (SIG-IDS)

3.3.90 Initiating Device Circuit. A circuit to which automatic or manual initiating devices are connected where the signal received does not identify the individual device operated. (SIG-PRO)

3.3.91 Ionization Smoke Detection. See 3.3.181, Smoke Detection.

3.3.92 Leg Facility. The portion of a communications channel that connects not more than one protected premises to a primary or secondary trunk facility. The leg facility includes the portion of the signal transmission circuit from its point of connection with a trunk facility to the point where it is terminated within the protected premises at one or more transponders. (SIG-SSS)

3.3.93 Level Ceilings. See 3.3.22, Ceiling.

3.3.94 Life Safety Network. A type of combination system that transmits fire safety control data through gateways to other building system control units. (SIG-PRO)

3.3.95 Living Area. Any normally occupiable space in a residential occupancy, other than sleeping rooms or rooms that are intended for combination sleeping/living, bathrooms, toilet compartments, kitchens, closets, halls, storage or utility spaces, and similar areas. [***101,*** 2006] (SIG-HOU)

3.3.96 Loading Capacity. The maximum number of discrete elements of fire alarm systems permitted to be used in a particular configuration. (SIG-SSS)

3.3.97 Lodging or Rooming House. A building or portion thereof that does not qualify as a one- or two-family dwelling, that provides sleeping accommodations for a total of 16 or fewer people on a transient or permanent basis, without personal care services, with or without meals, but without separate cooking facilities for individual occupants. [***101,*** 2006] (SIG-HOU)

3.3.98 Loss of Power. The reduction of available voltage at the load below the point at which equipment can function as designed. (SIG-FUN)

3.3.99 Low-Power Radio Transmitter. Any device that communicates with associated control/receiving equipment by low-power radio signals. (SIG-PRO)

3.3.100 Maintenance. Work, including, but not limited to, repair, replacement, and service, performed to ensure that equipment operates properly. (SIG-TMS)

3.3.101 Manual Fire Alarm Box. See 3.3.63, Fire Alarm Box.

3.3.102* Mass Notification System. A system used to provide information and instructions to people, in a building, area site, or other space. (SIG-PRO)

3.3.103 Master Box. See 3.3.63, Fire Alarm Box.

3.3.104 Master Fire Alarm Control Unit. See 3.3.64, Fire Alarm Control Unit.

3.3.105 Multiple Station Alarm. A single station alarm capable of being interconnected to one or more additional alarms so that the actuation of one causes the appropriate alarm signal to operate in all interconnected alarms. (SIG-HOU)

3.3.106 Multiple Station Alarm Device. Two or more single station alarm devices that can be interconnected so that actuation of one causes all integral or separate audible alarms to operate; or one single station alarm device having connections to other detectors or to a manual fire alarm box. (SIG-HOU)

3.3.107 Multiplexing. A signaling method characterized by simultaneous or sequential transmission, or both, and reception of multiple signals on a signaling line circuit, a transmission channel, or a communications channel, including means for positively identifying each signal. (SIG-SSS)

3.3.108 Municipal Fire Alarm Box (Street Box). A publicly accessible fire alarm box. See 3.3.63, Fire Alarm Box.

3.3.109 Municipal Fire Alarm System. See 3.3.67, Fire Alarm System.

3.3.110 Noncontiguous Property. See 3.3.138, Property.

3.3.111* Nonrequired. A fire alarm system component or group of components that is installed at the option of the owner, and is not installed due to a building or fire code requirement. (SIG-FUN)

3.3.112 Nonrestorable Initiating Device. See 3.3.89, Initiating Device.

3.3.113 Notification Appliance. A fire alarm system component such as a bell, horn, speaker, light, or text display that provides audible, tactile, or visible outputs, or any combination thereof. (SIG-NAS)

3.3.113.1 ***Audible Notification Appliance.*** A notification appliance that alerts by the sense of hearing. (SIG-NAS)

3.3.113.1.1 ***Exit Marking Audible Notification Appliance.*** An audible notification appliance that marks building exits and areas of refuge by the sense of hearing for the purpose of evacuation or relocation. (SIG-NAS)

3.3.113.1.2 ***Textual Audible Notification Appliance.*** A notification appliance that conveys a stream of audible information. An example of a textual audible notification appliance is a speaker that reproduces a voice message. (SIG-NAS)

3.3.113.2 ***Tactile Notification Appliance.*** A notification appliance that alerts by the sense of touch or vibration. (SIG-NAS)

Copyright National Fire Protection Association
Provided by IHS under license with NFPA
No reproduction or networking permitted without license from IHS
Not for Resale

3.3.113.3 ***Visible Notification Appliance.*** A notification appliance that alerts by the sense of sight. (SIG-NAS)

3.3.113.3.1 ***Textual Visible Notification Appliance.*** A notification appliance that conveys a stream of visible information that displays an alphanumeric or pictorial message. Textual visible notification appliances provide temporary text, permanent text, or symbols. Textual visible notification appliances include, but are not limited to, annunciators, monitors, CRTs, displays, and printers. (SIG-NAS)

3.3.114 Notification Appliance Circuit. A circuit or path directly connected to a notification appliance(s). (SIG-PRO)

3.3.115 Notification Zone. See 3.3.218, Zone.

3.3.116 Nuisance Alarm. See 3.3.5, Alarm.

3.3.117 Octave. The bandwidth of a filter that comprises a frequency range of a factor of 2. (That is, $f_2 = 2f_1$ as defined in IEC 61260. For example, for an octave-band centered on 500 Hz, the lower frequency is 353 Hz, and the upper frequency is 707 Hz). (SIG-NAS)

3.3.117.1 ***One-Third Octave.*** The bandwidth of a filter that comprises a frequency range of a factor of $2^{1/3}$. (That is, $f_2 = 2^{1/3} f_1$ as defined in IEC 61260.) The octave filter can be subdivided into three ⅓ octave-bands. (SIG-NAS)

3.3.118 Off-Hook. To make connection with the public-switched telephone network in preparation for dialing a telephone number. (SIG-SSS)

3.3.119 On-Hook. To disconnect from the public-switched telephone network. (SIG-SSS)

3.3.120 Open Area Detection (Protection). Protection of an area such as a room or space with detectors to provide early warning of fire. (SIG-IDS)

3.3.121 Operating Mode.

3.3.121.1 ***Private Operating Mode.*** Audible or visible signaling only to those persons directly concerned with the implementation and direction of emergency action initiation and procedure in the area protected by the fire alarm system. (SIG-NAS)

3.3.121.2 ***Public Operating Mode.*** Audible or visible signaling to occupants or inhabitants of the area protected by the fire alarm system. (SIG-NAS)

3.3.122 Operating System Software. The basic operating system software that can be altered only by the equipment manufacturer or its authorized representative. Operating system software is sometimes referred to as *firmware, BIOS,* or *executive program.* (SIG-FUN)

3.3.123* Ownership. Any property or building or its contents under legal control by the occupant, by contract, or by holding of a title or deed. (SIG-SSS)

3.3.124 Paging System. A system intended to page one or more persons by such means as voice over loudspeaker, coded audible signals or visible signals, or lamp annunciators. (SIG-PRO)

3.3.125 Parallel Telephone System. A telephone system in which an individually wired circuit is used for each fire alarm box. (SIG-SSS)

3.3.126 Path (Pathways). Any conductor, optic fiber, radio carrier, or other means for transmitting fire alarm system information between two or more locations. (SIG-FUN)

3.3.127 Permanent Visual Record (Recording). An immediately readable, not easily alterable, print, slash, or punch record of all occurrences of status change. (SIG-SSS)

3.3.128 Photoelectric Light Obscuration Smoke Detection. See 3.3.181, Smoke Detection.

3.3.129 Photoelectric Light-Scattering Smoke Detection. See 3.3.181, Smoke Detection.

3.3.130 Plant. One or more buildings under the same ownership or control on a single property. (SIG-SSS)

3.3.131 Positive Alarm Sequence. An automatic sequence that results in an alarm signal, even when manually delayed for investigation, unless the system is reset. (SIG-PRO)

3.3.132 Power Supply. A source of electrical operating power, including the circuits and terminations connecting it to the dependent system components. (SIG-FUN)

3.3.133 Primary Battery (Dry Cell). A nonrechargeable battery requiring periodic replacement. (SIG-FUN)

3.3.134 Primary Trunk Facility. That part of a transmission channel connecting all leg facilities to a supervising or subsidiary station. (SIG-SSS)

3.3.135 Prime Contractor. The one company contractually responsible for providing central station services to a subscriber as required by this Code. The prime contractor can be either a listed central station or a listed fire alarm service–local company. (SIG-SSS)

3.3.136 Private Operating Mode. See 3.3.121, Operating Mode.

3.3.137 Private Radio Signaling. A radio system under control of the proprietary supervising station. (SIG-SSS)

3.3.138 Property.

3.3.138.1 ***Contiguous Property.*** A single-owner or single-user protected premises on a continuous plot of ground, including any buildings thereon, that is not separated by a public thoroughfare, transportation right-of-way, property owned or used by others, or body of water not under the same ownership. (SIG-SSS)

3.3.138.2 ***Noncontiguous Property.*** An owner- or user-protected premises where two or more protected premises, controlled by the same owner or user, are separated by a public thoroughfare, body of water, transportation right-of-way, or property owned or used by others. (SIG-SSS)

3.3.139 Proprietary Supervising Station. See 3.3.194, Supervising Station.

3.3.140 Proprietary Supervising Station Fire Alarm System. See 3.3.67, Fire Alarm System.

3.3.141 Proprietary Supervising Station Service. See 3.3.195 Supervising Station Service.

3.3.142 Protected Premises. The physical location protected by a fire alarm system. (SIG-PRO)

3.3.143 Protected Premises (Local) Control Unit. See 3.3.64, Fire Alarm Control Unit.

3.3.144 Protected Premises (Local) Fire Alarm System. See 3.3.67, Fire Alarm System.

3.3.145 Public Fire Alarm Reporting System. See 3.3.67, Fire Alarm System.

Copyright National Fire Protection Association
Provided by IHS under license with NFPA
No reproduction or networking permitted without license from IHS
Not for Resale

3.3.146 Public Fire Service Communications Center. The building or portion of the building used to house the central operating part of the fire alarm system; usually the place where the necessary testing, switching, receiving, transmitting, and power supply devices are located. (SIG-PRS)

3.3.147 Public Operating Mode. See 3.3.121, Operating Mode.

3.3.148 Radio Alarm Repeater Station Receiver (RARSR). A system component that receives radio signals and resides at a repeater station that is located at a remote receiving location. (SIG-SSS)

3.3.149 Radio Alarm Supervising Station Receiver (RASSR). A system component that receives data and annunciates that data at the supervising station. (SIG-SSS)

3.3.150 Radio Alarm System (RAS). A system in which signals are transmitted from a radio alarm transmitter (RAT) located at a protected premises through a radio channel to two or more radio alarm repeater station receivers (RARSR) and that are annunciated by a radio alarm supervising station receiver (RASSR) located at the central station. (SIG-SSS)

3.3.151 Radio Alarm Transmitter (RAT). A system component at the protected premises to which initiating devices or groups of devices are connected that transmits signals indicating a status change of the initiating devices. (SIG-SSS)

3.3.152 Radio Channel. See 3.3.30, Channel.

3.3.153 Rate Compensation Detector. See 3.3.43, Detector.

3.3.154 Rate-of-Rise Detector. See 3.3.43, Detector.

3.3.155 Record Drawings. Drawings (as-built) that document the location of all devices, appliances, wiring sequences, wiring methods, and connections of the components of the fire alarm system as installed. (SIG-FUN)

3.3.156 Record of Completion. A document that acknowledges the features of installation, operation (performance), service, and equipment with representation by the property owner, system installer, system supplier, service organization, and the authority having jurisdiction. (SIG-FUN)

3.3.157 Relocation. The movement of occupants from a fire zone to a safe area within the same building. (SIG-PRO)

3.3.158 Remote Supervising Station. See 3.3.194, Supervising Station.

3.3.159 Remote Supervising Station Fire Alarm System. See 3.3.67, Fire Alarm System.

3.3.160 Remote Supervising Station Service. See 3.3.195, Supervising Station Service.

3.3.161 Repeater Station. The location of the equipment needed to relay signals between supervising stations, subsidiary stations, and protected premises. (SIG-SSS)

3.3.162 Reset. A control function that attempts to return a system or device to its normal, nonalarm state. (SIG-FUN)

3.3.163 Residential Board and Care Occupancy. A building or portion thereof that is used for lodging and boarding of four or more residents, not related by blood or marriage to the owners or operators, for the purpose of providing personal care services. [***101,*** 2006] (SIG-HOU)

3.3.164 Residential Occupancy. An occupancy that provides sleeping accommodations for purposes other than health care or detention and correctional. [***101,*** 2006] (SIG-HOU)

3.3.165 Restorable Initiating Device. See 3.3.89, Initiating Device.

3.3.166 Runner. A person other than the required number of operators on duty at central, supervising, or runner stations (or otherwise in contact with these stations) available for prompt dispatching, when necessary, to the protected premises. (SIG-SSS)

3.3.167 Runner Service. The service provided by a runner at the protected premises, including restoration, resetting, and silencing of all equipment transmitting fire alarm or supervisory or trouble signals to an off-premises location. (SIG-SSS)

3.3.168 Scanner. Equipment located at the telephone company wire center that monitors each local leg and relays status changes to the alarm center. Processors and associated equipment might also be included. (SIG-SSS)

3.3.169 Secondary Trunk Facility. That part of a transmission channel connecting two or more, but fewer than all, leg facilities to a primary trunk facility. (SIG-SSS)

3.3.170 Separate Sleeping Area. The area of a dwelling unit where the bedrooms or sleeping rooms are located. [**720,** 2005] (SIG-HOU)

3.3.171 Shapes of Ceilings. The shapes of ceilings can be classified as sloping or smooth. (SIG-IDS)

3.3.172 Signal. A status indication communicated by electrical or other means. (SIG-FUN)

3.3.172.1 ***Alarm Signal.*** A signal indicating an emergency condition or an alert that requires action. (SIG-FUN)

3.3.172.2 ***Delinquency Signal.*** A signal indicating the need for action in connection with the supervision of guards or system attendants. (SIG-PRO)

3.3.172.3 ***Evacuation Signal.*** A distinctive signal intended to be recognized by the occupants as requiring evacuation of the building. (SIG-PRO)

3.3.172.4 ***Fire Alarm Signal.*** A signal initiated by a fire alarm-initiating device such as a manual fire alarm box, automatic fire detector, waterflow switch, or other device in which activation is indicative of the presence of a fire or fire signature. (SIG-FUN)

3.3.172.5 ***Guard's Tour Supervisory Signal.*** A supervisory signal monitoring the performance of guard patrols. (SIG-PRO)

3.3.172.6 ***Supervisory Signal.*** A signal indicating the need for action in connection with the supervision of guard tours, the fire suppression systems or equipment, or the maintenance features of related systems. (SIG-FUN)

3.3.172.7 ***Trouble Signal.*** A signal initiated by a system or device indicative of a fault in a monitored circuit, system, or component. (SIG-FUN)

3.3.173 Signaling Line Circuit. A circuit path between any combination of addressable appliances or devices, circuit interfaces, control units, or transmitters over which multiple system input signals or output signals or both are carried. (SIG-PRO)

3.3.174 Signaling Line Circuit Interface. A system component that connects a signaling line circuit to any combination of

Copyright National Fire Protection Association
Provided by IHS under license with NFPA
No reproduction or networking permitted without license from IHS
Not for Resale

initiating devices, initiating device circuits, notification appliances, notification appliance circuits, system control outputs, and other signaling line circuits. (SIG-PRO)

3.3.175 Signal Transmission Sequence. A DACT that obtains dial tone, dials the number(s) of the DACR, obtains verification that the DACR is ready to receive signals, transmits the signals, and receives acknowledgment that the DACR has accepted that signal before disconnecting (going on-hook). (SIG-SSS)

3.3.176 Single Station Alarm. A detector comprising an assembly that incorporates a sensor, control components, and an alarm notification appliance in one unit operated from a power source either located in the unit or obtained at the point of installation. (SIG-HOU)

3.3.177 Single Station Alarm Device. An assembly that incorporates the detector, the control equipment, and the alarm-sounding device in one unit operated from a power supply either in the unit or obtained at the point of installation. (SIG-HOU)

3.3.178 Site-Specific Software. Software that defines the specific operation and configuration of a particular system. Typically, it defines the type and quantity of hardware modules, customized labels, and specific operating features of a system. (SIG-TMS)

3.3.179 Sloping Ceiling. See 3.3.22, Ceiling.

3.3.180 Smoke Alarm. A single or multiple station alarm responsive to smoke. (SIG-HOU)

3.3.181 Smoke Detection.

3.3.181.1 ***Cloud Chamber Smoke Detection.*** The principle of using an air sample drawn from the protected area into a high-humidity chamber combined with a lowering of chamber pressure to create an environment in which the resultant moisture in the air condenses on any smoke particles present, forming a cloud. The cloud density is measured by a photoelectric principle. The density signal is processed and used to convey an alarm condition when it meets preset criteria. (SIG-IDS)

3.3.181.2* ***Ionization Smoke Detection.*** The principle of using a small amount of radioactive material to ionize the air between two differentially charged electrodes to sense the presence of smoke particles. Smoke particles entering the ionization volume decrease the conductance of the air by reducing ion mobility. The reduced conductance signal is processed and used to convey an alarm condition when it meets preset criteria. (SIG-IDS)

3.3.181.3* ***Photoelectric Light Obscuration Smoke Detection.*** The principle of using a light source and a photosensitive sensor onto which the principal portion of the source emissions is focused. When smoke particles enter the light path, some of the light is scattered and some is absorbed, thereby reducing the light reaching the receiving sensor. The light reduction signal is processed and used to convey an alarm condition when it meets preset criteria. (SIG-IDS)

3.3.181.4* ***Photoelectric Light-Scattering Smoke Detection.*** The principle of using a light source and a photosensitive sensor arranged so that the rays from the light source do not normally fall onto the photosensitive sensor. When smoke particles enter the light path, some of the light is scattered by reflection and refraction onto the sensor. The light signal is processed and used to convey an alarm condition when it meets preset criteria. (SIG-IDS)

3.3.181.5* ***Video Image Smoke Detection (VISD).*** The principle of using automatic analysis of real-time video images to detect the presence of smoke. (SIG-IDS)

3.3.182 Smoke Detector. See 3.3.43, Detector.

3.3.183 Smooth Ceiling. See 3.3.24, Ceiling Surfaces.

3.3.184 Solid Joist Construction. See 3.3.24, Ceiling Surfaces.

3.3.185 Spacing. A horizontally measured dimension related to the allowable coverage of fire detectors. (SIG-IDS)

3.3.186* Spark. A moving particle of solid material that emits radiant energy due either to its temperature or the process of combustion on its surface. [**654,** 2006] (SIG-IDS)

3.3.187 Spark/Ember Detector. See 3.3.43, Detector.

3.3.188 Spark/Ember Detector Sensitivity. The number of watts (or the fraction of a watt) of radiant power from a point source radiator, applied as a unit step signal at the wavelength of maximum detector sensitivity, necessary to produce an alarm signal from the detector within the specified response time. (SIG-IDS)

3.3.189 Spot-Type Detector. See 3.3.43, Detector.

3.3.190 Story. The portion of a building located between the upper surface of a floor and the upper surface of the floor or roof next above. [***101*****,** 2006] (SIG-FUN)

3.3.191 Stratification. The phenomenon where the upward movement of smoke and gases ceases due to the loss of buoyancy. (SIG-IDS)

3.3.192 Subscriber. The recipient of a contractual supervising station signal service(s). In case of multiple, noncontiguous properties having single ownership, the term refers to each protected premises or its local management. (SIG-SSS)

3.3.193 Subsidiary Station. A subsidiary station is a normally unattended location that is remote from the supervising station and is linked by a communications channel(s) to the supervising station. Interconnection of signals on one or more transmission channels from protected premises with a communications channel(s) to the supervising station is performed at this location. (SIG-SSS)

3.3.194 Supervising Station. A facility that receives signals from protected premises fire alarm systems and at which personnel are in attendance at all times to respond to these signals. (SIG-SSS)

3.3.194.1 ***Central Supervising Station.*** A supervising station that is listed for central station service and that also commonly provides less stringent supervising station services such as remote supervising services. (SIG-SSS)

3.3.194.2 ***Proprietary Supervising Station.*** A supervising station under the same ownership as the protected premises fire alarm system(s) that it supervises (monitors) and to which alarm, supervisory, or trouble signals are received and where personnel are in attendance at all times to supervise operation and investigate signals. (SIG-SSS)

3.3.194.3 ***Remote Supervising Station.*** A supervising station to which alarm, supervisory, or trouble signals or any combination of those signals emanating from protected premises fire alarm systems are received and where personnel are in attendance at all times to respond. (SIG-SSS)

Copyright National Fire Protection Association
Provided by IHS under license with NFPA
No reproduction or networking permitted without license from IHS
Not for Resale

3.3.195 Supervising Station Service.

3.3.195.1 ***Central Station Service.*** The use of a system or a group of systems including the protected premises fire alarm system(s) in which the operations of circuits and devices are signaled to, recorded in, and supervised from a listed central station that has competent and experienced operators who, upon receipt of a signal, take such action as required by this Code. Related activities at the protected premises, such as equipment installation, inspection, testing, maintenance, and runner service, are the responsibility of the central station or a listed fire alarm service local company. Central station service is controlled and operated by a person, firm, or corporation whose business is the furnishing of such contracted services or whose properties are the protected premises. (SIG-SSS)

3.3.195.2 ***Proprietary Supervising Station Service.*** The use of a system or a group of systems including the protected premises fire alarm system(s) in which the operations of circuits and devices are signaled to, recorded in, and supervised from a supervising station under the same ownership as the protected premises that has competent and experienced operators who, upon receipt of a signal, take such action as required by this Code. Related activities at the protected premises, such as equipment installation, inspection, testing, maintenance, and runner service, are the responsibility of the owner. Proprietary supervising station service is controlled and operated by the entity whose properties are the protected premises. (SIG-SSS)

3.3.195.3 ***Remote Supervising Station Service.*** The use of a system including the protected premises fire alarm system(s) in which the operations of circuits and devices are signaled to, recorded in, and supervised from a supervising station that has competent and experienced operators who, upon receipt of a signal, take such action as required by this Code. Related activities at the protected premises, such as equipment installation, inspection, testing, and maintenance, are the responsibility of the owner. (SIG-SSS)

3.3.196 Supervisory Service. The service required to monitor performance of guard tours and the operative condition of fixed suppression systems or other systems for the protection of life and property. (SIG-PRO)

3.3.197 Supervisory Signal. See 3.3.172, Signal.

3.3.198 Supervisory Signal-Initiating Device. See 3.3.89, Initiating Device.

3.3.199 Supplementary. As used in this Code, *supplementary* refers to equipment or operations not required by this Code and designated as such by the authority having jurisdiction. (SIG-FUN)

3.3.200 Switched Telephone Network. An assembly of communications facilities and central office equipment operated jointly by authorized service providers that provides the general public with the ability to establish transmission channels via discrete dialing. (SIG-SSS)

3.3.200.1 ***Public Switched Telephone Network.*** An assembly of communications facilities and central office equipment operated jointly by authorized common carriers that provides the general public with the ability to establish communications channels via discrete dialing codes. (SIG-SSS)

3.3.201 System Unit. The active subassemblies at the supervising station used for signal receiving, processing, display, or recording of status change signals; a failure of one of these subassemblies causes the loss of a number of alarm signals by that unit. (SIG-SSS)

3.3.202 Tactile Notification Appliance. See 3.3.113, Notification Appliance.

3.3.203 Textual Audible Notification Appliance. See 3.3.113, Notification Appliance.

3.3.204 Textual Visual Notification Appliance. See 3.3.113, Notification Appliance.

3.3.205 Transmission Channel. See 3.3.30, Channel.

3.3.206 Transmitter. A system component that provides an interface between signaling line circuits, initiating device circuits, or control units and the transmission channel. (SIG-SSS)

3.3.207 Transponder. A multiplex alarm transmission system functional assembly located at the protected premises. (SIG-SSS)

3.3.208 Trouble Signal. See 3.3.172, Signal.

3.3.209* Video Image Flame Detection (VIFD). The principle of using automatic analysis of real-time video images to detect the presence of flame. (SIG-IDS)

3.3.210 Visible Notification Appliance. See 3.3.113, Notification Appliance.

3.3.211* Voice Intelligibility. Audible voice information that is distinguishable and understandable. (SIG-NAS)

3.3.212 WATS (Wide Area Telephone Service). Telephone company service allowing reduced costs for certain telephone call arrangements. In-WATS or 800-number service calls can be placed from anywhere in the continental United States to the called party at no cost on to the calling party. Out-WATS is a service whereby, for a flat-rate charge, dependent on the total duration of all such calls, a subscriber can make an unlimited number of calls within a prescribed area from a particular telephone terminal without the registration of individual call charges. (SIG-SSS)

3.3.213* Wavelength. The distance between the peaks of a sinusoidal wave. All radiant energy can be described as a wave having a wavelength. Wavelength serves as the unit of measure for distinguishing between different parts of the spectrum. Wavelengths are measured in microns (μm), nanometers (nm), or angstroms (Å). (SIG-IDS)

3.3.214 Wide Area Signaling. Signaling intended to provide alerting or information to exterior open spaces, such as campuses, neighborhood streets, a city, a town, or a community. (SIG-NAS)

3.3.215 Wireless Control Unit. See 3.3.39, Control Unit.

3.3.216 Wireless Protection System. A system or a part of a system that can transmit and receive signals without the aid of interconnection wiring. It can consist of either a wireless control unit or a wireless repeater. (SIG-PRO)

3.3.217 Wireless Repeater. A component used to relay signals among wireless devices, appliances, and control units. (SIG-PRO)

Copyright National Fire Protection Association
Provided by IHS under license with NFPA
No reproduction or networking permitted without license from IHS
Not for Resale

3.3.218 Zone. A defined area within the protected premises. A zone can define an area from which a signal can be received, an area to which a signal can be sent, or an area in which a form of control can be executed. (SIG-FUN)

3.3.218.1* ***Evacuation Signaling Zone.*** A discrete area of a building, bounded by smoke or fire barriers, from which occupants are intended to relocate or evacuate. (SIG-PRO)

3.3.218.2 ***Notification Zone.*** An area covered by notification appliances that are activated simultaneously. (SIG-PRO)

Chapter 4 Fundamentals of Fire Alarm Systems

4.1 Application.

4.1.1 The basic functions of a complete fire alarm system shall comply with the requirements of this chapter.

4.1.2 The requirements of this chapter shall apply to fire alarm systems, equipment, and components addressed in Chapter 5 through Chapter 10.

4.2 Purpose. The purpose of fire alarm systems shall be primarily to provide notification of fire alarm, supervisory, and trouble conditions; to alert the occupants; to summon aid; and to control fire safety functions.

4.3 Equipment and Personnel.

4.3.1 Equipment. Equipment constructed and installed in conformity with this Code shall be listed for the purpose for which it is used. Fire alarm system components shall be installed, tested, and maintained in accordance with the manufacturer's published instructions and this Code.

4.3.2 System Designer.

4.3.2.1 Fire alarm system plans and specifications shall be developed in accordance with this Code by persons who are experienced in the proper design, application, installation, and testing of fire alarm systems.

4.3.2.2 The system designer shall be identified on the system design documents. Acceptable evidence of qualifications or certification shall be provided when requested by the authority having jurisdiction. Qualified personnel shall include, but not be limited to, one or more of the following:

(1) Personnel who are factory trained and certified for fire alarm system design of the specific type and brand of system being designed
(2)*Personnel who are certified by a nationally recognized fire alarm certification organization acceptable to the authority having jurisdiction
(3) Personnel who are registered, licensed, or certified by a state or local authority

4.3.3 System Installer. Installation personnel shall be qualified or shall be supervised by persons who are qualified in the installation, inspection, and testing of fire alarm systems. Evidence of qualifications or certification shall be provided when requested by the authority having jurisdiction. Qualified personnel shall include, but not be limited to, one or more of the following:

(1) Personnel who are factory trained and certified for fire alarm system installation of the specific type and brand of system being installed
(2)*Personnel who are certified by a nationally recognized fire alarm certification organization acceptable to the authority having jurisdiction
(3) Personnel who are registered, licensed, or certified by a state or local authority

4.4 System Fundamentals.

4.4.1 Power Supplies.

4.4.1.1 Scope. The provisions of this section shall apply to power supplies used for both protected premises fire alarm systems described in Chapter 6 and to supervising station facilities and equipment described in Chapter 8.

4.4.1.2 Code Conformance. All power supplies shall be installed in conformity with the requirements of NFPA 70, *National Electrical Code*, for such equipment and with the requirements indicated in this subsection.

4.4.1.3 Power Supply Sources.

4.4.1.3.1 At least two independent and reliable power supplies shall be provided, one primary and one secondary, each of which shall be of adequate capacity for the application.

4.4.1.3.2 Monitoring the integrity of power supplies shall be in accordance with 4.4.7.3.

4.4.1.4 Primary Power Supply.

4.4.1.4.1 Dedicated Branch Circuit. A dedicated branch circuit of one of the following shall supply primary power:

(1) Commercial light and power
(2) An engine-driven generator or equivalent in accordance with 4.4.1.9.2, where a person specifically trained in its operation is on duty at all times
(3) An engine-driven generator or equivalent arranged for cogeneration with commercial light and power in accordance with 4.4.1.9.2, where a person specifically trained in its operation is on duty at all times

4.4.1.4.2 Mechanical Protection.

4.4.1.4.2.1 The dedicated branch circuit(s) and connections shall be mechanically protected.

4.4.1.4.2.2 Circuit disconnecting means shall have a red marking, shall be accessible only to authorized personnel, and shall be identified as "FIRE ALARM CIRCUIT."

4.4.1.4.2.3 The location of the circuit disconnecting means shall be permanently identified at the fire alarm control unit.

4.4.1.4.3 Overcurrent Protection. An overcurrent protective device of suitable current-carrying capacity that is capable of interrupting the maximum short-circuit current to which it can be subject shall be provided in each ungrounded conductor.

4.4.1.4.4 Circuit Breakers and Engine Stops. Circuit breakers or engine stops shall not be installed in such a manner as to cut off the power for lighting or for operating elevators.

4.4.1.5 Secondary Power Supply.

4.4.1.5.1* Secondary Power Supply for Protected Premises Fire Alarm Systems. The secondary power supply shall consist of one of the following:

(1) A storage battery dedicated to the fire alarm system arranged in accordance with 4.4.1.8
(2) An automatic starting, engine-driven generator serving the dedicated branch circuit specified in 4.4.1.4.1 and arranged in accordance with 4.4.1.9.3.1 and storage batteries dedicated to the fire alarm system with 4 hours of capacity arranged in accordance with 4.4.1.8

Copyright National Fire Protection Association
Provided by IHS under license with NFPA
No reproduction or networking permitted without license from IHS
Not for Resale

4.4.1.5.2 Secondary Power Supply for Supervising Station Facilities.

4.4.1.5.2.1 The secondary power supply shall consist of one of the following:

(1) Storage batteries dedicated to the supervising station equipment arranged in accordance with 4.4.1.8
(2) A dedicated branch circuit of an automatic-starting, engine-driven generator arranged in accordance with 4.4.1.9.3.2(A) and storage batteries dedicated to the supervising station equipment with 4 hours of capacity arranged in accordance with 4.4.1.8
(3) A dedicated branch circuit of multiple engine-driven generators, at least one of which is arranged for automatic starting in accordance with 4.4.1.9.3.2(A)

4.4.1.5.2.2 Where 4.4.1.5.2.1(3) is used, 4.4.1.5.2.2(A) through 4.4.1.5.2.2(C) shall apply.

(A) Each generator shall be capable of supplying the energy required.

(B) Generators that are started manually shall be arranged in accordance with 4.4.1.9.3.2(B).

(C) When manual-start generators are employed, a person trained in the procedure of starting the generator shall be on duty at all times.

4.4.1.5.3* Capacity.

4.4.1.5.3.1 Unless otherwise permitted or required by 4.4.1.5.3.1(A) or 4.4.1.5.3.1(B), the secondary power supply shall have sufficient capacity to operate the fire alarm system under quiescent load (system operating in a nonalarm condition) for a minimum of 24 hours and, at the end of that period, shall be capable of operating all alarm notification appliances used for evacuation or to direct aid to the location of an emergency for 5 minutes.

(A) The secondary power supply for emergency voice/alarm communications service shall be capable of operating the system under quiescent load for a minimum of 24 hours and then shall be capable of operating the system during a fire or other emergency condition for a period of 15 minutes at maximum connected load.

(B) The secondary power supply capacity for supervising station facilities and equipment shall be capable of supporting operations for a minimum of 24 hours.

4.4.1.5.3.2 The secondary power supply capacity required shall include all power supply loads that are not automatically disconnected upon the transfer to secondary power supply.

4.4.1.5.4 Secondary Power Operation. Operation on secondary power shall not affect the required performance of a fire alarm system or supervising station facility. The system shall produce the same alarm, supervisory, and trouble signals and indications, excluding the alternating current (ac) power indicator, when operating from the secondary power source as are produced when the unit is operating from the primary power source.

Exception: Audio amplifier monitoring shall comply with 4.4.7.2.1.

4.4.1.6* Continuity of Power Supplies.

4.4.1.6.1 The secondary power supply shall automatically provide power to the protected premises fire alarm system within 10 seconds, whenever the primary power supply fails to provide the minimum voltage required for proper operation.

4.4.1.6.2 The secondary power supply shall automatically provide power to the supervising station facility and equipment within 60 seconds whenever the primary power supply fails to provide the minimum voltage required for proper operation.

4.4.1.6.3 Required signals shall not be lost, interrupted, or delayed by more than 10 seconds as a result of the primary power failure.

4.4.1.6.3.1 Storage batteries dedicated to the fire alarm system or an uninterruptible power supply (UPS) arranged in accordance with the provisions of NFPA 111, *Standard on Stored Electrical Energy Emergency and Standby Power Systems*, shall be permitted to supplement the secondary power supply to ensure required operation during the transfer period.

4.4.1.6.3.2 Where a UPS is employed in 4.4.1.6.3.1, a positive means for disconnecting the input and output of the UPS system while maintaining continuity of power supply to the load shall be provided.

4.4.1.7 Power Supply for Remotely Located Control Equipment.

4.4.1.7.1 Additional power supplies, where provided for control units, circuit interfaces, or other equipment essential to system operation, and located remotely from the main control unit, shall be comprised of a primary and secondary power supply that shall meet the same requirements as those of 4.4.1.1 through 4.4.1.6 and 4.4.7.3.

4.4.1.7.2 The location of any remotely located power supply shall be identified at the master control unit as well as on the record drawings. Identification on the control unit display shall be acceptable.

4.4.1.8* Storage Batteries.

4.4.1.8.1* Marking. Batteries shall be permanently marked with the month and year of manufacture, using the month/year format.

4.4.1.8.2 Location. Storage batteries shall be located so that the fire alarm equipment, including overcurrent devices, are not adversely affected by battery gases and shall conform to the requirements of NFPA 70, *National Electrical Code*, Article 480.

4.4.1.8.2.1 Cells shall be suitably insulated against grounds and crosses and shall be mounted securely in such a manner so as not to be subject to mechanical injury.

4.4.1.8.2.2 Racks shall be suitably protected against deterioration.

4.4.1.8.2.3 If not located in or adjacent to the fire alarm control unit, the batteries and their charger location shall be permanently identified at the fire alarm control unit.

4.4.1.8.3 Battery Charging.

4.4.1.8.3.1 Adequate facilities shall be provided to automatically maintain the battery fully charged under all conditions of normal operation.

4.4.1.8.3.2 Adequate facilities shall be provided to recharge batteries within 48 hours after fully charged batteries have been subject to a single discharge cycle as specified in 4.4.1.5.3.

Copyright National Fire Protection Association
Provided by IHS under license with NFPA
No reproduction or networking permitted without license from IHS
Not for Resale

4.4.1.8.3.3 Upon attaining a fully charged condition, the charge rate shall not be so excessive as to result in battery damage.

4.4.1.8.3.4* Batteries shall be either trickle- or float-charged.

4.4.1.8.3.5 Supervising stations shall maintain spare parts or units available, which shall be used to restore failed charging capacity prior to the consumption of one-half of the capacity of the batteries for the supervising station equipment.

4.4.1.8.4 Overcurrent Protection.

4.4.1.8.4.1 The batteries shall be protected against excessive load current by overcurrent devices.

4.4.1.8.4.2 The batteries shall be protected from excessive charging current by overcurrent devices or by automatic current-limiting design of the charging source.

4.4.1.8.5 Metering. The charging equipment shall provide either integral meters or readily accessible terminal facilities for the connection of portable meters by which the battery voltage and charging current can be determined.

4.4.1.8.6 Charger Supervision. Supervision means appropriate for the batteries and charger employed shall be provided to detect a failure of battery charging and initiate a trouble signal in accordance with 4.4.3.5.

4.4.1.9 Engine-Driven Generators.

4.4.1.9.1 Application and Installation. The application and installation of engine-driven generators shall be as specified in 4.4.1.9.2 through 4.4.1.9.7.

4.4.1.9.2 Primary Power Supply. Engine-driven generators arranged as the primary supply shall be designed and installed in an approved manner.

4.4.1.9.3 Secondary Power Supplies.

4.4.1.9.3.1 Protected Premises.

(A) Engine-driven generators used to provide secondary power for a protected premises fire alarm system shall comply with NFPA 110, *Standard for Emergency and Standby Power Systems*, Chapter 4, requirements for a Type 10, Class 24, Level 1 System. Installation shall be in accordance with NFPA 70, *National Electrical Code*, Article 700.

(B) Where survivability of circuits is required by Chapter 6, equal protection shall be provided for power supply circuits.

4.4.1.9.3.2 Supervising Station.

(A) Automatic-starting, engine-driven generators used to provide secondary power for a supervising station shall comply with NFPA 110, *Standard for Emergency and Standby Power Systems*, Chapter 4, requirements for a Type 60, Class 24, Level 2 system. Installation shall be in accordance with NFPA 70, *National Electrical Code*, Article 701.

(B) Manual-starting, engine-driven generators used to provide secondary power for a supervising station shall comply with NFPA 110, *Standard for Emergency and Standby Power Systems*, Chapter 4, requirements for a Type M, Class 24, Level 2 system. Installation shall be in accordance with NFPA 70, *National Electrical Code*, Article 702.

4.4.1.9.4 Performance, Operation, Testing, and Maintenance. The requirements for performance, operation, testing, and maintenance of engine-driven generators shall conform to the applicable provisions of NFPA 110, *Standard for Emergency and Standby Power Systems*.

4.4.1.9.5 Capacity. The unit shall be of a capacity that is sufficient to operate the system under the maximum normal load conditions in addition to all other demands placed upon the unit.

4.4.1.9.6 Fuel. Unless otherwise required or permitted in 4.4.1.9.6.1 through 4.4.1.9.6.3, fuel shall be available in storage sufficient for 6 months of testing plus the capacity specified in 4.4.1.5.

4.4.1.9.6.1 For public fire alarm reporting systems, the requirements of Chapter 9 shall apply.

4.4.1.9.6.2 If a reliable source of supply is available at any time on a 2-hour notice, it shall be permitted to have fuel in storage sufficient for 12 hours of operation at full load.

4.4.1.9.6.3 Fuel systems using natural or manufactured gas supplied through reliable utility mains shall not be required to have fuel storage tanks unless located in seismic risk zone 3 or greater as defined in ANSI A-58.1, *Building Code Requirements for Minimum Design Loads in Buildings and Other Structures*.

4.4.1.9.7 Battery and Charger. A separate storage battery and separate automatic charger shall be provided for starting the engine-driven generator and shall not be used for any other purpose.

4.4.2 Compatibility. All detection devices that receive their power from the initiating device circuit or signaling line circuit of a control unit shall be listed for use with the control unit.

4.4.3 System Functions.

4.4.3.1* Alarm Signals. A coded alarm signal shall consist of not less than three complete rounds of the number transmitted. Each round shall consist of not less than three impulses.

4.4.3.2 Supervisory Signals.

4.4.3.2.1 Coded Supervisory Signal. A coded supervisory signal shall be permitted to consist of two rounds of the number transmitted to indicate a supervisory off-normal condition, and one round of the number transmitted to indicate the restoration of the supervisory condition to normal.

4.4.3.2.2 Combined Coded Alarm and Supervisory Signal Circuits. Where both coded sprinkler supervisory signals and coded fire or waterflow alarm signals are transmitted over the same signaling line circuit, provision shall be made to obtain either alarm signal precedence or sufficient repetition of the alarm signal to prevent the loss of an alarm signal.

4.4.3.2.3 Self-Restoring Supervisory Signal Indication. Visible and audible indication of self-restoring supervisory signals and visible indication of their restoration to normal shall be automatically indicated within 90 seconds at the following locations:

(1) Fire alarm control unit for local fire alarm systems
(2) Building fire command center for emergency voice/alarm communications systems
(3) Supervising station location for systems installed in compliance with Chapter 8

4.4.3.2.4 Latching Supervisory Signal Indication. Visible and audible indication of latching supervisory signals shall be indicated within 90 seconds at the locations specified in 4.4.3.2.3.

Copyright National Fire Protection Association
Provided by IHS under license with NFPA
No reproduction or networking permitted without license from IHS
Not for Resale

Restoration of latching supervisory signals shall be indicated within 90 seconds at the same locations, after manual reset of the control unit, when the initiating device is normal.

4.4.3.3 Distinctive Signals. Fire alarms, supervisory signals, and trouble signals shall be distinctively and descriptively annunciated.

4.4.3.4 Fire Safety Function Status Indicators.

4.4.3.4.1 All controls provided specifically for the purpose of manually overriding any automatic fire safety function shall provide visible indication of the status of the associated control circuits.

4.4.3.4.2* Where status indicators are provided for emergency equipment or fire safety functions, they shall be arranged to reflect the actual status of the associated equipment or function.

4.4.3.5 Trouble Signals.

4.4.3.5.1 Trouble signals and their restoration to normal shall be indicated within 200 seconds at the locations identified in 4.4.3.5.6 or 4.4.3.5.7. Indication of primary power failure trouble signals transmitted to a supervising station shall be delayed in accordance with 4.4.7.3.3.

4.4.3.5.2 Trouble signals required to indicate at the protected premises shall be indicated by distinctive audible signals, which shall be distinctive from alarm signals.

4.4.3.5.3 If an intermittent signal is used, it shall sound at least once every 10 seconds, with a minimum duration of ½ second.

4.4.3.5.4 An audible trouble signal shall be permitted to be common to several supervised circuits.

4.4.3.5.5 The trouble signal(s) shall be located in an area where it is likely to be heard.

4.4.3.5.6 Visible and audible trouble signals and visible indication of their restoration to normal shall be indicated at the following locations:

(1) Fire alarm control unit for protected premises alarm systems
(2) Building fire command center for emergency voice/alarm communications systems
(3) Central station or remote station location for systems installed in compliance with Chapter 8

4.4.3.5.7 Trouble signals and their restoration to normal shall be visibly and audibly indicated at the proprietary supervising station for systems installed in compliance with Chapter 8.

4.4.3.5.8 Audible Trouble Signal Silencing Means.

4.4.3.5.8.1 A means for silencing the trouble notification appliance(s) shall be permitted only if it complies with 4.4.3.5.8.1(A) through 4.4.3.5.8.1(D).

(A) The means shall be key-operated, located within a locked enclosure, or arranged to provide equivalent protection against unauthorized use.

(B) The means shall transfer the trouble indication to a suitably identified lamp or other acceptable visible indicator.

(C) The visible indication in 4.4.3.5.8.1(B) shall persist until the trouble condition has been corrected.

(D) The audible trouble signal shall sound when the silencing means is in its silence position and no trouble exists.

4.4.3.5.8.2 If an audible trouble notification appliance is also used to indicate a supervisory condition, as permitted in 4.4.3.6.2(2), a trouble signal silencing switch shall not prevent subsequent sounding of supervisory signals.

4.4.3.5.8.3* An audible trouble signal that has been silenced at the protected premises shall comply with 4.4.3.5.8.3(A) through 4.4.3.5.8.3(C).

(A) The audible trouble signal shall automatically re-sound every 24 hours or less until fault conditions are restored to normal.

(B) The audible trouble signal shall sound until it is manually silenced or acknowledged.

(C) The re-sounded trouble signal shall also be automatically retransmitted to any supervising station to which the original trouble signal was transmitted.

4.4.3.5.8.4* If permitted by the authority having jurisdiction, the requirement for a 24-hour re-sound of an audible trouble signal shall be permitted to occur only at a supervising station that meets the requirements of Chapter 8 and not at the protected premises.

4.4.3.6 Distinctive Signals.

4.4.3.6.1 Audible alarm notification appliances for a fire alarm system shall produce signals that are distinctive from other similar appliances used for other purposes in the same area.

4.4.3.6.2 The distinction among signals shall be as follows:

(1) Fire alarm signals shall be distinctive in sound from other signals, shall comply with the requirements of 6.8.6.5.1, and their sound shall not be used for any other purpose.
(2)* Supervisory signals shall be distinctive in sound from other signals, and their sound shall not be used for any other purpose.

Exception: A supervisory signal sound shall be permitted to be used to indicate a trouble condition. If the same sound is used for both supervisory signals and trouble signals, the distinction between signals shall be by other appropriate means such as visible annunciation.

(3) Fire alarm, supervisory, and trouble signals shall take precedence, in that respective order of priority, over all other signals.

Exception: Signals from hold-up alarms or other life-threatening signals shall be permitted to take precedence over supervisory and trouble signals if acceptable to the authority having jurisdiction.

4.4.3.7* Alarm Signal Deactivation.

4.4.3.7.1 A means for turning off activated alarm notification appliance(s) shall be permitted only if it complies with 4.4.3.7.3 through 4.4.3.7.6.

4.4.3.7.2 When an alarm signal deactivation means is actuated, both audible and visible notification appliances shall be simultaneously deactivated.

4.4.3.7.3 The means shall be key-operated, located within a locked cabinet, or arranged to provide equivalent protection against unauthorized use.

4.4.3.7.4 The means shall provide a visible zone alarm indication or the equivalent as specified in 4.4.6.1.

Copyright National Fire Protection Association
Provided by IHS under license with NFPA
No reproduction or networking permitted without license from IHS
Not for Resale

4.4.3.7.5 Subsequent actuation of initiating devices on other initiating device circuits or subsequent actuation of addressable initiating devices on signaling line circuits shall cause the notification appliances to reactivate.

Exception: If permitted by the authority having jurisdiction, subsequent actuation of another addressable initiating device of the same type in the same room or space shall not be required to cause the notification appliance(s) to reactivate.

4.4.3.7.6 A means that is left in the "off" position when there is no alarm shall operate an audible trouble signal until the means is restored to normal.

4.4.3.8 Supervisory Signal Silencing. A means for silencing a supervisory signal notification appliance(s) shall be permitted only if it complies with 4.4.3.8.1 through 4.4.3.8.3.

4.4.3.8.1 The means shall be key-operated, located within a locked enclosure, or arranged to provide equivalent protection against unauthorized use.

4.4.3.8.2 The means shall transfer the supervisory indication to a lamp or other visible indicator, and subsequent supervisory signals in other zones shall cause the supervisory notification appliance(s) to re-sound.

4.4.3.8.3 A means that is left in the "silence" position where there is no supervisory off-normal signal shall operate a visible signal silence indicator and cause the trouble signal to sound until the silencing means is restored to normal position.

4.4.4 Performance and Limitations.

4.4.4.1 Voltage, Temperature, and Humidity Variation. Equipment shall be designed so that it is capable of performing its intended functions under the following conditions:

(1) *At 85 percent and at 110 percent of the nameplate primary (main) and secondary (standby) input voltage(s)
(2) At ambient temperatures of 0°C (32°F) and 49°C (120°F)
(3) At a relative humidity of 85 percent and an ambient temperature of 30°C (86°F)

4.4.4.2 Installation and Design.

4.4.4.2.1* All systems shall be installed in accordance with the specifications and standards approved by the authority having jurisdiction.

4.4.4.2.2 Devices and appliances shall be located and mounted so that accidental operation or failure is not caused by vibration or jarring.

4.4.4.2.3 All apparatus requiring rewinding or resetting to maintain normal operation shall be restored to normal as promptly as possible after each alarm and kept in normal condition for operation.

4.4.4.2.4 Equipment shall be installed in locations where conditions do not exceed the voltage, temperature, and humidity limits specified in 4.4.4.1.

Exception: Equipment specifically listed for use in locations where conditions can exceed the upper and lower limits specified in 4.4.4.1 shall be permitted.

4.4.4.3 Transient Protection. To reduce the possibility of damage by induced transients, circuits and equipment shall be properly protected in accordance with the requirements of NFPA 70, *National Electrical Code*, Article 800.

4.4.4.4* Wiring. The installation of all wiring, cable, and equipment shall be in accordance with NFPA 70, *National Electrical Code*, and specifically with Articles 760, 770, and 800, where applicable. Optical fiber cables shall be protected against mechanical injury in accordance with Article 760.

4.4.4.5 Grounding. All systems shall test free of grounds.

Exception: Parts of circuits or equipment that are intentionally and permanently grounded to provide ground-fault detection, noise suppression, emergency ground signaling, and circuit protection grounding shall be permitted.

4.4.4.6 Initiating Devices.

4.4.4.6.1 Initiating devices of the manual or automatic type shall be selected and installed so as to minimize nuisance alarms.

4.4.4.6.2 Fire alarm boxes of the manually operated type shall comply with Section 5.13 and 6.8.5.2.1.

4.4.5* Protection of Fire Alarm System. In areas that are not continuously occupied, automatic smoke detection shall be provided at the location of each fire alarm control unit(s), notification appliance circuit power extenders, and supervising station transmitting equipment to provide notification of fire at that location.

Exception No. 1: Where ambient conditions prohibit installation of automatic smoke detection, automatic heat detection shall be permitted.

Exception No. 2: Fully sprinklered buildings shall not require protection in accordance with 4.4.5.

4.4.6 Annunciation and Annunciation Zoning.

4.4.6.1 Alarm Annunciation. Where required, the location of an operated initiating device shall be annunciated by visible means. Visible annunciation shall be by an indicator lamp, alphanumeric display, printout, or other approved means. The visible annunciation of the location of operated initiating devices shall not be canceled by the means used to deactivate alarm notification appliances.

4.4.6.2 Supervisory and Trouble Annunciation. Where required, supervisory and/or trouble annunciation shall be annunciated by visible means. Visible annunciation shall be by an indicator lamp, alphanumeric display, printout, or other means. The visible annunciation of supervisory and/or trouble conditions shall not be canceled by the means used to deactivate supervisory or trouble notification appliances.

4.4.6.3* Annunciator Access and Location. All required annunciation means shall be readily accessible to responding personnel and shall be located as required by the authority having jurisdiction to facilitate an efficient response to the fire situation.

4.4.6.4 Alarm Annunciation Display. Visible annunciators shall be capable of displaying all zones in alarm. If all zones in alarm are not displayed simultaneously, the zone of origin shall be displayed and there shall be an indication that other zones are in alarm.

4.4.6.5 Fire Command Center. Annunciation at the fire command center shall be by means of audible and visible indicators.

4.4.6.6* Annunciation Zoning.

4.4.6.6.1 For the purpose of alarm annunciation, each floor of the building shall be considered as a separate zone. If a

Copyright National Fire Protection Association
Provided by IHS under license with NFPA
No reproduction or networking permitted without license from IHS
Not for Resale

floor is subdivided by fire or smoke barriers and the fire plan for the protected premises allows relocation of occupants from the zone of origin to another zone on the same floor, each zone on the floor shall be annunciated separately for purposes of alarm location.

4.4.6.6.2 Where the system serves more than one building, each building shall be annunciated separately.

4.4.7 Monitoring Integrity.

4.4.7.1* Monitoring Integrity of Installation Conductors and Other Signaling Channels. Unless otherwise permitted or required by 4.4.7.1.1 through 4.4.7.1.13, all means of interconnecting equipment, devices, and appliances and wiring connections shall be monitored for the integrity of the interconnecting conductors or equivalent path so that the occurrence of a single open or a single ground-fault condition in the installation conductors or other signaling channels and their restoration to normal shall be automatically indicated within 200 seconds.

4.4.7.1.1 Monitoring for integrity shall not be required for styles of initiating device circuits, signaling line circuits, and notification appliance circuits tabulated in Table 6.5, Table 6.6.1, and Table 6.7 that do not have an "X" under "Trouble" for the abnormal condition indicated.

4.4.7.1.2 Shorts between conductors shall not be required to be monitored for integrity, unless required by 4.4.7.1.17 and 4.4.7.2.2.

4.4.7.1.3 Monitoring for integrity shall not be required for a noninterfering shunt circuit, provided that a fault circuit condition on the shunt circuit wiring results only in the loss of the noninterfering feature of operation.

4.4.7.1.4 Monitoring for integrity shall not be required for connections to and between supplementary system components, provided that single open, ground, or short-circuit conditions of the supplementary equipment or interconnecting means, or both, do not affect the required operation of the fire alarm system.

4.4.7.1.5 Monitoring for integrity shall not be required for the circuit of an alarm notification appliance installed in the same room with the central control equipment, provided that the notification appliance circuit conductors are installed in conduit or are equivalently protected against mechanical injury.

4.4.7.1.6 Monitoring for integrity shall not be required for a trouble signal circuit.

4.4.7.1.7* Monitoring for integrity shall not be required for the interconnection between listed equipment within a common enclosure.

4.4.7.1.8 Monitoring for integrity shall not be required for the interconnection between enclosures containing control equipment located within 6 m (20 ft) of each other where the conductors are installed in conduit or equivalently protected against mechanical injury.

4.4.7.1.9 Monitoring for integrity shall not be required for the conductors for ground detection where a single ground does not prevent the required normal operation of the system.

4.4.7.1.10 Monitoring for integrity shall not be required for central station circuits serving notification appliances within a central station.

4.4.7.1.11 Monitoring for integrity shall not be required for pneumatic rate-of-rise systems of the continuous line type in which the wiring terminals of such devices are connected in multiple across electrically supervised circuits.

4.4.7.1.12 Monitoring for integrity shall not be required for the interconnecting wiring of a stationary computer and the computer's keyboard, video monitor, mouse-type device, or touch screen, as long as the interconnecting wiring does not exceed 2.4 m (8 ft) in length; is a listed computer/data processing cable as permitted by NFPA 70, *National Electrical Code*; and failure of cable does not cause the failure of the required system functions not initiated from the keyboard, mouse, or touch screen.

4.4.7.1.13 Monitoring for integrity of the installation conductors for a ground-fault condition shall not be required for the communications and transmission channels extending from a supervising station to a subsidiary station(s) or protected premises, or both, which comply with the requirements of Chapter 8 and are electrically isolated from the fire alarm system (or circuits) by a transmitter(s), provided that a single ground condition does not affect the required operation of the fire alarm system.

4.4.7.1.14 Interconnection means shall be arranged so that a single break or single ground fault does not cause an alarm signal.

4.4.7.1.15 Unacknowledged alarm signals shall not be interrupted if a fault on an initiating device circuit or a signaling line circuit occurs while there is an alarm condition on that circuit.

Exception: Circuits used to interconnect fire alarm control units.

4.4.7.1.16 An open, ground, or short-circuit fault on the installation conductors of one alarm notification appliance circuit shall not affect the operation of any other alarm notification circuit.

4.4.7.1.17 A wire-to-wire short-circuit fault on any alarm notification appliance circuit shall result in a trouble signal in accordance with 4.4.3.5, except as permitted by 4.4.7.1.4, 4.4.7.1.5, or 4.4.7.1.10.

4.4.7.2 Monitoring Integrity of Emergency Voice/Alarm Communications Systems.

4.4.7.2.1* Speaker Amplifier and Tone-Generating Equipment. If speakers are used to produce audible fire alarm signals, the required trouble signal for 4.4.7.2.1.1 through 4.4.7.2.1.3 shall be in accordance with 4.4.3.5.

4.4.7.2.1.1 When primary power is available, failure of any audio amplifier shall result in a trouble signal.

4.4.7.2.1.2 When an alarm is present and primary power is not available (i.e., system is operating from the secondary power source), failure of any audio amplifier shall result in a trouble signal.

4.4.7.2.1.3 Failure of any tone-generating equipment shall result in a trouble signal, unless the tone-generating and amplifying equipment are enclosed as integral parts and serve only a single, listed loudspeaker.

4.4.7.2.2 Two-Way Telephone Communications Circuits. Where a two-way telephone communications circuit is provided, its installation wires shall be monitored for open and short-circuit fault conditions that would cause the telephone communications circuit to become fully or partially inoperative.

Copyright National Fire Protection Association
Provided by IHS under license with NFPA
No reproduction or networking permitted without license from IHS
Not for Resale

Two-way telephone communications circuit fault conditions shall result in a trouble signal in accordance with 4.4.3.5.

4.4.7.3 Monitoring Integrity of Power Supplies.

4.4.7.3.1 Unless otherwise permitted or required by 4.4.7.3.1.1 through 4.4.7.3.1.4, all primary and secondary power supplies shall be monitored for the presence of voltage at the point of connection to the system. Failure of either supply shall result in a trouble signal in accordance with 4.4.3.5. Where the DACT is powered from a protected premises fire alarm system control unit, power failure indication shall be in accordance with this paragraph.

4.4.7.3.1.1 Monitoring shall not be required for a power supply for supplementary equipment.

4.4.7.3.1.2 Monitoring shall not be required for the neutral of a three-, four-, or five-wire ac or direct current (dc) supply source.

4.4.7.3.1.3 Monitoring shall not be required for the main power supply in a central station, provided the fault condition is otherwise indicated so as to be obvious to the operator on duty.

4.4.7.3.1.4 Monitoring shall not be required for the output of an engine-driven generator that is part of the secondary power supply, provided the generator is tested weekly in accordance with Chapter 10.

4.4.7.3.2* Power supply sources and electrical supervision for digital alarm communications systems shall be in accordance with 4.4.1 and 4.4.7.

4.4.7.3.3* Unless prohibited by the authority having jurisdiction, supervising station fire alarm systems shall be arranged to delay transmission of primary power failure signals for a period ranging from 60 to 180 minutes.

4.4.7.3.4 Power supervisory devices shall be arranged so as not to impair the receipt of fire alarm or supervisory signals.

4.5 Documentation.

4.5.1 Approval and Acceptance.

4.5.1.1* The authority having jurisdiction shall be notified prior to installation or alteration of equipment or wiring. At the authority having jurisdiction's request, complete information regarding the system or system alterations, including specifications, type of system or service, shop drawings, input/output matrix, battery calculations, and notification appliance circuit voltage drop calculations shall be submitted for approval.

4.5.1.2 Before requesting final approval of the installation, if required by the authority having jurisdiction, the installing contractor shall furnish a written statement stating that the system has been installed in accordance with approved plans and tested in accordance with the manufacturer's published instructions and the appropriate NFPA requirements.

4.5.1.3* The record of completion form, Figure 4.5.2.1, shall be permitted to be a part of the written statement required in 4.5.1.2. When more than one contractor has been responsible for the installation, each contractor shall complete the portions of the form for which that contractor had responsibility.

4.5.1.4 The record of completion form, Figure 4.5.2.1, shall be permitted to be a part of the documents that support the requirements of 4.5.2.4.

4.5.2 Completion Documents.

4.5.2.1* Preparation. The preparation of a record of completion, Figure 4.5.2.1, shall be the responsibility of the qualified and experienced person described in 4.3.3 and shall be in accordance with 4.5.2.1.1 through 4.5.2.1.3.

4.5.2.1.1 Parts 1 through 11 shall be completed after the system is installed and the installation wiring has been checked. Parts 12 and 13 shall be completed after the operational acceptance tests have been completed.

4.5.2.1.2 A preliminary copy of the record of completion shall be given to the system owner and, if requested, to other authorities having jurisdiction after completion of the installation wiring tests. A final copy shall be provided after completion of the operational acceptance tests.

4.5.2.1.3 One copy of the record of completion, updated to reflect all system additions or modifications and maintained in a current condition at all times, shall be stored at the fire alarm control unit or other location approved by the authority having jurisdiction.

4.5.2.2 Revision. All fire alarm systems that are modified after the initial installation shall have the original record of completion revised to show all changes from the original information and shall include a revision date.

4.5.2.3 Documentation Required. Every system shall include the following documentation, which shall be delivered to the owner or the owner's representative upon final acceptance of the system:

(1)*An owner's manual and manufacturer's published instructions covering all system equipment
(2) Record drawings
(3) For software-based systems, a record copy of the site-specific software

4.5.2.4* Verification of Compliant Installation. Where required, compliance of the completed installation with the requirements of this standard, as implemented via the referring code(s), specifications, and/or other criteria applicable to the specific installation, shall be certified by a qualified and impartial third-party organization acceptable to the authority having jurisdiction.

4.5.2.4.1 At a minimum, the verification shall ensure that the installed system includes all required components and functions, that those components and functions are installed and operate as required, that the system has been 100 percent acceptance tested in accordance with Chapter 10, and that all required documentation has been provided to the system owner. For supervising station systems, the verification shall also ascertain proper arrangement, transmission, and receipt of all signals required to be transmitted off-premises.

Exception: Where the installation is an extension, modification, or reconfiguration of an existing system, the verification shall be required for the new work only and reacceptance testing in accordance with Chapter 10 shall be acceptable.

4.5.2.4.2 Verification shall include confirmation that any required corrective actions have been completed.

4.5.3 Records.

4.5.3.1 A complete record of the tests and operations of each system shall be kept until the next test and for 1 year thereafter.

--`,,```,,,,````-`-`,,`,,`,`,,`---

Copyright National Fire Protection Association
Provided by IHS under license with NFPA
No reproduction or networking permitted without license from IHS
Not for Resale

FIRE ALARM SYSTEM RECORD OF COMPLETION

To be completed by the system installation contractor at the time of system acceptance and approval.

1. PROTECTED PROPERTY INFORMATION

Name of property: _____

Address: _____

Description of property: _____

Occupancy type: _____

Name of property representative: _____

Address: _____

Phone: _____ Fax: _____ E-mail: _____

Authority having jurisdiction over this property: _____

Phone: _____ Fax: _____ E-mail: _____

2. FIRE ALARM SYSTEM INSTALLATION, SERVICE, AND TESTING INFORMATION

Installation contractor for this equipment: _____

Address: _____

Phone: _____ Fax: _____ E-mail: _____

Service organization for this equipment: _____

Address: _____

Phone: _____ Fax: _____ E-mail: _____

Location of as-built drawings: _____ Location of historical test reports: _____

Location of system operation and maintenance manuals: _____

A contract for test and inspection in accordance with NFPA standards is in effect as of _____

Contracted testing company: _____

Address: _____

Phone: _____ Fax: _____ E-mail: _____

Contract expires: _____ Contract number: _____ Frequency of routine inspections: _____

3. TYPE OF FIRE ALARM SYSTEM OR SERVICE

NFPA 72 Chapter Reference of System Type: _____

Name of organization receiving alarm signals with phone numbers *(if applicable)*:

Alarm: _____ Phone: _____

Supervisory: _____ Phone: _____

Trouble: _____ Phone: _____

Entity to which alarms are retransmitted: _____ Phone: _____

Method of retransmission of alarms to that organization or location: _____

© 2007 National Fire Protection Association *NFPA 72* (p. 1 of 5)

FIGURE 4.5.2.1 Record of Completion.

Copyright National Fire Protection Association
Provided by IHS under license with NFPA
No reproduction or networking permitted without license from IHS
Not for Resale

3. TYPE OF FIRE ALARM SYSTEM OR SERVICE *(continued)*

If Chapter 8, note the means of transmission from the protected premises to the central station:

❑ Digital alarm communicator ❑ McCulloh ❑ Multiplex ❑ 2-way radio ❑ 1-way radio ❑ N/A

If Chapter 9, note the type of connection: ❑ Local energy ❑ Shunt ❑ N/A

3.1 System Software

Operating system (executive) software revision level: _____

Site-specific software revision date: _____ Revision completed by: _____

4. SIGNALING LINE CIRCUITS

Characteristics of signaling line circuits connected to this system (see NFPA 72, Table 6.6.1):

Quantity: _____ Style: _____ Class: _____

5. ALARM-INITIATING DEVICES AND CIRCUITS

Characteristics of initiating device circuits connected to this system (see NFPA 72, Table 6.5):

Quantity: _____ Style: _____ Class: _____

5.1 Manual Initiating Devices

5.1.1 Manual Pull Stations Number of manual pull stations: _____

Type of devices: ❑ Addressable ❑ Conventional ❑ Coded ❑ Transmitter ❑ N/A

5.2 Automatic Initiating Devices

5.2.1 Area Smoke Detectors Number of smoke detectors: _____

Type of coverage: ❑ Complete area ❑ Partial area ❑ Nonrequired partial area ❑ N/A

Type of devices: ❑ Addressable ❑ Conventional ❑ Coded ❑ Transmitter ❑ N/A

Type of smoke detector sensing technology: ❑ Ionization ❑ Photoelectric

5.2.2 Duct Smoke Detectors Number of duct smoke detectors: _____

Type of coverage: _____

Type of devices: ❑ Addressable ❑ Conventional ❑ Coded ❑ Transmitter ❑ N/A

Type of smoke detector sensing technology: ❑ Ionization ❑ Photoelectric

5.2.3 Heat Detectors Number of heat detectors: _____

Type of coverage: ❑ Complete area ❑ Partial area ❑ Nonrequired partial area ❑ N/A

Type of devices: ❑ Addressable ❑ Conventional ❑ Coded ❑ Transmitter ❑ N/A

5.2.4 Sprinkler Waterflow Detectors Number of waterflow detectors: _____

Type of devices ❑ Addressable ❑ Conventional ❑ Coded ❑ Transmitter ❑ N/A

5.2.5 Alarm Verification Number of devices subject to alarm verification: _____

Alarm verification on this system is: ❑ Enabled ❑ Disabled ❑ Set for _____ seconds

© 2007 National Fire Protection Association *NFPA 72* (p. 2 of 5)

FIGURE 4.5.2.1 ***Continued***

Copyright National Fire Protection Association
Provided by IHS under license with NFPA
No reproduction or networking permitted without license from IHS
Not for Resale

6. SUPERVISORY SIGNAL-INITIATING DEVICES AND CIRCUITS

6.1 Sprinkler System

Number of valve supervisory switches: _____

Type of devices: ❑ Addressable ❑ Conventional ❑ Coded ❑ Transmitter ❑ N/A

6.2 Fire Pump

Type of fire pump: ❑ Electric ❑ Diesel

Type of fire pump supervisory devices: ❑ Addressable ❑ Conventional ❑ Coded ❑ Transmitter ❑ N/A

Fire Pump Functions Supervised

❑ Fire pump power ❑ Fire pump running ❑ Fire pump phase reversal ❑ Selector switch not in auto

❑ Engine or control panel trouble ❑ Low fuel

Other: _____

6.3 Engine-Driven Generator

Type of generator supervisory devices: ❑ Addressable ❑ Conventional ❑ Coded ❑ Transmitter ❑ N/A

❑ Engine or control panel trouble ❑ Generator running ❑ Selector switch not in auto ❑ Low fuel

Other: _____

7. ANNUNCIATORS

7.1 Annunciator 1 ❑ Local ❑ Remote

Type: ❑ Addressable ❑ Directory ❑ Graphic ❑ N/A Location: _____

7.2 Annunciator 2 ❑ Local ❑ Remote

Type: ❑ Addressable ❑ Directory ❑ Graphic ❑ N/A Location: _____

7.3 Annunciator 3 ❑ Local ❑ Remote

Type: ❑ Addressable ❑ Directory ❑ Graphic ❑ N/A Location: _____

8. ALARM NOTIFICATION DEVICES AND CIRCUITS

8.1 Emergency Voice Alarm Service

Number of single voice alarm channels: _____ Number of multiple voice alarm channels: _____

Number of speakers: _____ Number of speaker zones: _____

8.2 Telephone Jacks

Number of telephone jacks installed: _____ Number of telephone handsets stored on site: _____

Type of telephone system installed: ❑ Electrically powered ❑ Sound powered ❑ N/A

8.3 Nonvoice Audible System

Characteristics of notification device circuits connected to this system (see NFPA 72, Table 6.5):

Quantity: _____ Style: _____ Class: _____

© 2007 National Fire Protection Association *NFPA 72* (p. 3 of 5)

FIGURE 4.5.2.1 ***Continued***

Copyright National Fire Protection Association
Provided by IHS under license with NFPA
No reproduction or networking permitted without license from IHS
Not for Resale

8. ALARM NOTIFICATION DEVICES AND CIRCUITS *(continued)*

8.4 Types and Quantities of Nonvoice Notification Appliances Installed

Bells: _____ With visual device: _____ Horns: _____ With visual device: _____

Chimes: _____ With visual device: _____ Bells: _____ With visual device: _____

Visual devices without audible devices: _____ Other (describe): _____

9. EMERGENCY CONTROL FUNCTIONS ACTIVATED

❑ Hold-open door releasing devices ❑ Smoke management or smoke control

❑ Door unlocking ❑ Elevator recall ❑ Other

10. SYSTEM POWER SUPPLY

10.1 Primary Power

Nominal voltage _____ Amps _____

Overcurrent protection: Type _____ Amps _____

Location (of primary supply panelboard): _____

Disconnecting means location: _____

10.2 Secondary Power

Location: _____ Type: _____ Nominal voltage: _____ Current rating: _____

Number of standby batteries: _____ Amp hour rating: _____

Location of emergency generator: _____

Location of fuel storage: _____

Calculated capacity of secondary power to drive the system

In standby mode: _____ In alarm mode: _____

11. RECORD OF SYSTEM INSTALLATION

Fill out after all installation is complete and wiring has been checked for opens, shorts, ground faults, and improper branching, but before conducting operational acceptance tests.

The system has been installed in accordance with the following NFPA standards: (Note any or all that apply.)

❑ *NFPA 72* ❑ NFPA 70, *National Electrical Code*, Article 760

❑ Manufacturer's published instructions ❑ Other (please specify): _____

System deviations from referenced NFPA standards: _____

Signed: _____ Printed name: _____ Date: _____

Organization: _____ Title: _____ Phone: _____

12. RECORD OF SYSTEM OPERATION

All operational features and functions of this system were tested by or in the presence of the signer shown below, on the date shown below, and were found to be operating properly in accordance with the requirements of:

❑ *NFPA 72* ❑ NFPA 70, *National Electrical Code*, Article 760

❑ Manufacturer's published instructions ❑ Other (please specify):

❑ Documentation in accordance with Inspection and Testing Form (Figure 10.6.2.3) is attached

Signed: _____ Printed name: _____ Date: _____

Organization: _____ Title: _____ Phone: _____

© 2007 National Fire Protection Association

FIGURE 4.5.2.1 ***Continued***

Copyright National Fire Protection Association
Provided by IHS under license with NFPA
No reproduction or networking permitted without license from IHS
Not for Resale

13. CERTIFICATIONS AND APPROVALS

13.1 System Installation Contractor

This system as specified herein has been installed and tested according to all NFPA standards cited herein.

Signed: _____ Printed name: _____ Date: _____

Organization: _____ Title: _____ Phone: _____

13.2 System Service Contractor

This system as specified herein has been installed and tested according to all NFPA standards cited herein.

Signed: _____ Printed name: _____ Date: _____

Organization: _____ Title: _____ Phone: _____

13.3 Central Station

This system as specified herein will be monitored according to all NFPA standards cited herein.

Signed: _____ Printed name: _____ Date: _____

Organization: _____ Title: _____ Phone: _____

13.4 Property Representative

I accept this system as having been installed and tested to its specifications and all NFPA standards cited herein.

Signed: _____ Printed name: _____ Date: _____

Organization: _____ Title: _____ Phone: _____

13.5 Authority Having Jurisdiction

I have witnessed a satisfactory acceptance test of this system and find it to be installed and operating properly in accordance with its approved plans and specifications, its approved sequence of operations, and with all NFPA standards cited herein.

Signed: _____ Printed name: _____ Date: _____

Organization: _____ Title: _____ Phone: _____

© 2007 National Fire Protection Association *NFPA 72* (p. 5 of 5)

FIGURE 4.5.2.1 ***Continued***

Copyright National Fire Protection Association
Provided by IHS under license with NFPA
No reproduction or networking permitted without license from IHS
Not for Resale

4.5.3.2 The record shall be available for examination and, if required, reported to the authority having jurisdiction. Archiving of records by any means shall be permitted if hard copies of the records can be provided promptly when requested.

4.5.3.3 If off-premises monitoring is provided, records of all signals, tests, and operations recorded at the supervising station shall be maintained for not less than 1 year.

4.6* Impairments.

4.6.1 The system owner or their designated representative shall be notified when a fire alarm system or part thereof is impaired. Impairments to systems shall include out-of-service events.

4.6.2 A record shall be maintained by the system owner or designated representative for a period of 1 year from the date the impairment is corrected.

4.6.3* Where required, mitigating measures acceptable to the authority having jurisdiction shall be implemented for the period that the system is impaired.

4.6.4 The system owner or owner's designated representative shall be notified when an impairment period is completed or discontinued.

4.7 Mass Notification Systems. See Annex E.

Chapter 5 Initiating Devices

5.1 Application.

5.1.1 The performance, selection, use, and location of automatic fire detection devices, sprinkler waterflow detectors, manually activated fire alarm stations, and supervisory signal-initiating devices (including guard tour reporting used to ensure timely warning for the purposes of life safety and the protection of a building, space, structure, area, or object) shall comply with the minimum requirements of this chapter.

5.1.2 The requirements of Chapter 4 and Chapter 6 shall also apply unless they are in conflict with this chapter.

5.1.3 The requirements of Chapter 10 shall apply.

5.1.4 The requirements of single- and multiple-station alarms and household fire alarm systems shall be determined in accordance with Chapter 11.

5.1.5 The material in this chapter shall be applied by persons knowledgeable in the application of fire detection and fire alarm systems and services.

5.1.6 The interconnection of initiating devices with control equipment configurations and power supplies, or with output systems responding to external actuation, shall be as detailed elsewhere in this Code or in other NFPA codes and standards.

5.2 Purpose. Automatic and manual initiating devices shall contribute to life safety, fire protection, and property conservation by providing a reliable means to signal other equipment arranged to monitor the initiating devices and to initiate a response to those signals.

5.3* Performance-Based Design.

5.3.1 Performance-based designs submitted to the authority having jurisdiction for review and approval shall include documentation, in an approved format, of each performance objective and applicable scenario, together with any calculations, modeling, or other technical substantiation used in establishing the proposed design's fire and life safety performance.

5.3.2 The authority having jurisdiction shall determine whether such identified performance objectives are appropriate and have been met.

5.3.3 The authority having jurisdiction shall approve modifications to or variations from the approved design or design basis in advance.

5.4 General Requirements.

5.4.1 These requirements shall apply to all initiating devices.

5.4.2 Initiating devices shall not be installed in inaccessible areas.

5.4.3 Where subject to mechanical damage, an initiating device shall be protected. A mechanical guard used to protect a smoke, heat, or radiant energy–sensing detector shall be listed for use with the detector.

5.4.4 Initiating devices shall be supported independently of their attachment to the circuit conductors.

5.4.5 Initiating devices shall be installed in a manner that provides accessibility for periodic maintenance.

5.4.6 Initiating devices shall be installed in all areas, compartments, or locations where required by other NFPA codes and standards or as required by the authority having jurisdiction.

5.4.7* Duplicate terminals, leads, or connectors that provide for the connection of installation wiring shall be provided on each initiating device for the express purpose of connecting into the fire alarm system to monitor the integrity of the signaling and power wiring.

Exception: Initiating devices connected to a system that provides the required monitoring.

5.5 Requirements for Smoke and Heat Detectors.

5.5.1 Recessed Mounting. Unless tested and listed for recessed mounting, detectors shall not be recessed into the mounting surface.

5.5.2* Detector Coverage.

5.5.2.1 Total (Complete) Coverage. If required and unless otherwise modified by 5.5.2.1.1 through 5.5.2.1.5, total coverage shall include all rooms, halls, storage areas, basements, attics, lofts, spaces above suspended ceilings, and other subdivisions and accessible spaces as well as the inside of all closets, elevator shafts, enclosed stairways, dumbwaiter shafts, and chutes.

5.5.2.1.1 Where inaccessible areas contain combustible material, unless otherwise specified in 5.5.2.1.2, they shall be made accessible and shall be protected by a detector(s).

5.5.2.1.2 Detectors shall not be required in combustible blind spaces if any of the following conditions exist:

(1) Where the ceiling is attached directly to the underside of the supporting beams of a combustible roof or floor deck
(2) Where the concealed space is entirely filled with a noncombustible insulation (In solid joist construction, the insulation shall be required to fill only the space from the ceiling to the bottom edge of the joist of the roof or floor deck.)

Copyright National Fire Protection Association
Provided by IHS under license with NFPA
No reproduction or networking permitted without license from IHS
Not for Resale

(3) Where there are small concealed spaces over rooms, provided any space in question does not exceed 4.6 m^2 (50 ft^2) in area
(4) In spaces formed by sets of facing studs or solid joists in walls, floors, or ceilings where the distance between the facing studs or solid joists is less than 150 mm (6 in.)

5.5.2.1.3 Detectors shall not be required below open grid ceilings if all of the following conditions exist:

(1) Openings of the grid are 6.4 mm (¼ in.) or larger in the least dimension.
(2) Thickness of the material does not exceed the least dimension.
(3) Openings constitute at least 70 percent of the area of the ceiling material.

5.5.2.1.4 Detectors shall not be required in concealed, accessible spaces above suspended ceilings that are used as a return air plenum meeting the requirements of NFPA 90A, *Standard for the Installation of Air-Conditioning and Ventilating Systems*, where equipped with smoke detection at each connection from the plenum to the central air-handling system.

5.5.2.1.5 Detectors shall not be required underneath open loading docks or platforms and their covers and for accessible under-floor spaces if all of the following conditions exist:

(1) Space is not accessible for storage purposes or entrance of unauthorized persons and is protected against the accumulation of windborne debris.
(2) Space contains no equipment such as steam pipes, electric wiring, shafting, or conveyors.
(3) Floor over the space is tight.
(4) No flammable liquids are processed, handled, or stored on the floor above.

5.5.2.2* Partial or Selective Coverage. Where codes, standards, laws, or authorities having jurisdiction require the protection of selected areas only, the specified areas shall be protected in accordance with this Code.

5.5.2.3* Nonrequired Coverage.

5.5.2.3.1 Detection installed for reasons of achieving specific fire safety objectives, but not required by any laws, codes, or standards, shall meet all of the requirements of this Code, with the exception of prescriptive spacing criteria of 5.6.5 and 5.7.3.2.3.

5.5.2.3.2 Where nonrequired detectors are installed for achieving specific fire safety objectives, additional detectors not necessary to achieve the objectives shall not be required.

5.6 Heat-Sensing Fire Detectors.

5.6.1 General.

5.6.1.1* The heat detection design documentation shall state the required performance objective of the system.

5.6.1.2 Designs not in accordance with 5.6.1.3 shall be deemed prescriptive designs and shall be designed in accordance with the prescriptive requirements of this chapter.

5.6.1.3* Performance-based designs shall be executed in accordance with Section 5.3.

5.6.1.4* Spot-type heat detectors shall include in their installation instructions, technical data, and listing documentation the operating temperature and RTI (response time index) as determined by the organization listing the device. The requirement for RTI documentation shall have an effective date of July 1, 2008.

5.6.2 Temperature Classification.

5.6.2.1 Color Coding.

5.6.2.1.1 Heat-sensing fire detectors of the fixed-temperature or rate-compensated, spot-type shall be classified as to the temperature of operation and marked with a color code in accordance with Table 5.6.2.1.1.

Exception: Heat-sensing fire detectors where the alarm threshold is field adjustable and that are marked with the temperature range.

Table 5.6.2.1.1 Temperature Classification for Heat-Sensing Fire Detectors

Temperature Classification	Temperature Rating Range °C	Temperature Rating Range °F	Maximum Ceiling Temperature °C	Maximum Ceiling Temperature °F	Color Code
Low*	39–57	100–134	28	80	Uncolored
Ordinary	58–79	135–174	47	115	Uncolored
Intermediate	80–121	175–249	69	155	White
High	122–162	250–324	111	230	Blue
Extra high	163–204	325–399	152	305	Red
Very extra high	205–259	400–499	194	380	Green
Ultra high	260–302	500–575	249	480	Orange

*Intended only for installation in controlled ambient areas. Units shall be marked to indicate maximum ambient installation temperature.

5.6.2.1.2 If the overall color of a heat-sensing fire detector is the same as the color code marking required for that detector, one of the following arrangements, applied in a contrasting color and visible after installation, shall be employed:

(1) Ring on the surface of the detector
(2) Temperature rating in numerals at least 9.5 mm (⅜ in.) high

5.6.2.2* Integral Heat Sensors on Combination and Multi-Sensor Detectors. A heat-sensing detector integrally mounted on a smoke detector shall be listed for not less than 15 m (50 ft) spacing.

5.6.2.3 Marking. Heat-sensing fire detectors shall be marked with their listed operating temperature. Spot-type heat detectors shall also be marked with their RTI (response time index). The RTI marking requirements shall have an effective date of July 1, 2008.

5.6.3 Location.

5.6.3.1* Unless otherwise modified by 5.6.3.1.1 or 5.6.3.1.2, spot-type heat-sensing fire detectors shall be located on the ceiling not less than 100 mm (4 in.) from the sidewall or on the sidewalls between 100 mm and 300 mm (4 in. and 12 in.) from the ceiling.

5.6.3.1.1 In the case of solid joist construction, detectors shall be mounted at the bottom of the joists.

5.6.3.1.2 In the case of beam construction where beams are less than 300 mm (12 in.) in depth and less than 2.4 m (8 ft)

Copyright National Fire Protection Association
Provided by IHS under license with NFPA
No reproduction or networking permitted without license from IHS
Not for Resale

on center, detectors shall be permitted to be installed on the bottom of beams.

5.6.3.2 Unless otherwise modified by 5.6.3.2.1 through 5.6.3.2.3, line-type heat detectors shall be located on the ceiling or on the sidewalls not more than 500 mm (20 in.) from the ceiling.

5.6.3.2.1 In the case of solid joist construction, detectors shall be mounted at the bottom of the joists.

5.6.3.2.2 In the case of beam construction where beams are less than 300 mm (12 in.) in depth and less than 2.4 m (8 ft) on center, detectors shall be permitted to be installed on the bottom of beams.

5.6.3.2.3 Where a line-type detector is used in an application other than open area protection, the manufacturer's published instructions shall be followed.

5.6.4* Temperature. Detectors having fixed-temperature or rate-compensated elements shall be selected in accordance with Table 5.6.2.1.1 for the maximum expected ambient ceiling temperature. The temperature rating of the detector shall be at least 11°C (20°F) above the maximum expected temperature at the ceiling.

5.6.5* Spacing.

5.6.5.1* Smooth Ceiling Spacing.

5.6.5.1.1 One of the following requirements shall apply:

(1) The distance between detectors shall not exceed their listed spacing, and there shall be detectors within a distance of one-half the listed spacing, measured at right angles from all walls or partitions extending upward to within the top 15 percent of the ceiling height.
(2) All points on the ceiling shall have a detector within a distance equal to 0.7 times the listed spacing (0.7*S*).

5.6.5.1.2* For irregularly shaped areas, the spacing between detectors shall be permitted to be greater than the listed spacing, provided the maximum spacing from a detector to the farthest point of a sidewall or corner within its zone of protection is not greater than 0.7 times the listed spacing.

5.6.5.2* Solid Joist Construction. The spacing of heat detectors, where measured at right angles to the solid joists, shall not exceed 50 percent of the smooth ceiling spacing permitted under 5.6.5.1.1 and 5.6.5.1.2.

5.6.5.3* Beam Construction.

5.6.5.3.1 A ceiling shall be treated as a smooth ceiling if the beams project no more than 100 mm (4 in.) below the ceiling.

5.6.5.3.2 Where the beams project more than 100 mm (4 in.) below the ceiling, the spacing of spot-type heat detectors at right angles to the direction of beam travel shall be not more than two-thirds of the smooth ceiling spacing permitted under 5.6.5.1.1 and 5.6.5.1.2.

5.6.5.3.3 Where the beams project more than 460 mm (18 in.) below the ceiling and are more than 2.4 m (8 ft) on center, each bay formed by the beams shall be treated as a separate area.

5.6.5.4 Sloping Ceilings.

5.6.5.4.1* Peaked. A row of detectors shall first be spaced and located at or within 900 mm (3 ft) of the peak of the ceiling, measured horizontally. The number and spacing of additional detectors, if any, shall be based on the horizontal projection of the ceiling in accordance with the type of ceiling construction.

5.6.5.4.2* Shed. Sloping ceilings shall have a row of detectors located on the ceiling within 900 mm (3 ft) of the high side of the ceiling measured horizontally, spaced in accordance with the type of ceiling construction. The remaining detectors, if any, shall be located in the remaining area on the basis of the horizontal projection of the ceiling.

5.6.5.4.3 Roof Slope Less Than 30 Degrees. For a roof slope of less than 30 degrees, all detectors shall be spaced using the height at the peak. For a roof slope of greater than 30 degrees, the average slope height shall be used for all detectors other than those located in the peak.

5.6.5.5 High Ceilings.

5.6.5.5.1* On ceilings 3 m to 9.1 m (10 ft to 30 ft) high, heat detector linear spacing shall be reduced in accordance with Table 5.6.5.5.1 prior to any additional reductions for beams, joists, or slope, where applicable.

Exception: Table 5.6.5.5.1 shall not apply to the following detectors, which rely on the integration effect:

(1) Line-type electrical conductivity detectors (see 3.3.43.10)
(2) Pneumatic rate-of-rise tubing heat detectors (see 3.3.43.14)

In these cases, the manufacturer's published instructions shall be followed for appropriate alarm point and spacing.

Table 5.6.5.5.1 Heat Detector Spacing Reduction Based on Ceiling Height

Ceiling Height Above		Up to and Including		Multiply Listed Spacing by
m	ft	m	ft	
0	0	3.05	10	1.00
3.05	10	3.66	12	0.91
3.66	12	4.27	14	0.84
4.27	14	4.88	16	0.77
4.88	16	5.49	18	0.71
5.49	18	6.10	20	0.64
6.10	20	6.71	22	0.58
6.71	22	7.32	24	0.52
7.32	24	7.93	26	0.46
7.93	26	8.54	28	0.40
8.54	28	9.14	30	0.34

5.6.5.5.2* The minimum spacing of heat detectors shall not be required to be less than 0.4 times the height of the ceiling.

5.6.5.6 Alternative Design Methods. Annex B shall be permitted to be used as one alternative design method for determining detector spacing.

5.7 Smoke-Sensing Fire Detectors.

5.7.1 General.

5.7.1.1* The smoke detection design documentation shall state the required performance objective of the system.

5.7.1.2* Designs not in accordance with 5.7.1.3 shall be deemed prescriptive designs and shall be designed in accordance with the prescriptive requirements of this chapter.

--`,,```,,,,````-`-`,,`,,`,`,,`---

Copyright National Fire Protection Association
Provided by IHS under license with NFPA
No reproduction or networking permitted without license from IHS
Not for Resale

5.7.1.3* Performance-based designs shall be executed in accordance with Section 5.3.

5.7.1.4 The prescriptive requirements in this section shall be applied only where detectors are installed in ordinary indoor locations.

5.7.1.5 Where smoke detectors are being installed to control the spread of smoke, they shall be installed in accordance with the requirements of Section 5.16.

5.7.1.6 Smoke detectors shall be installed in all areas where required by applicable laws, codes, or standards.

5.7.1.7 The selection and placement of smoke detectors shall take into account both the performance characteristics of the detector and the areas into which the detectors are to be installed to prevent nuisance alarms or improper operation after installation.

5.7.1.8* Unless specifically designed and listed for the expected conditions, smoke detectors shall not be installed if any of the following ambient conditions exist:

(1) Temperature below 0°C (32°F)
(2) Temperature above 38°C (100°F)
(3) Relative humidity above 93 percent
(4) Air velocity greater than 1.5 m/sec (300 ft/min)

5.7.1.9* The location of smoke detectors shall be based on an evaluation of potential ambient sources of smoke, moisture, dust, or fumes, and electrical or mechanical influences to minimize nuisance alarms.

5.7.1.10* The effect of stratification below the ceiling shall be taken into account. The guidelines in Annex B shall be permitted to be used.

5.7.1.11 Detectors shall not be installed until after the construction cleanup of all trades is complete and final.

Exception: Where required by the authority having jurisdiction for protection during construction. Detectors that have been installed during construction and found to have a sensitivity outside the listed and marked sensitivity range shall be cleaned or replaced in accordance with Chapter 10 at completion of construction.

5.7.2* Sensitivity.

5.7.2.1* Smoke detectors shall be marked with their nominal production sensitivity and tolerance (percent per foot obscuration), as required by the listing.

5.7.2.2 Smoke detectors that have provision for field adjustment of sensitivity shall have an adjustment range of not less than 0.6 percent per foot obscuration.

5.7.2.3 If the means of adjustment of sensitivity is on the detector, a method shall be provided to restore the detector to its factory calibration.

5.7.2.4 Detectors that have provision for program-controlled adjustment of sensitivity shall be permitted to be marked with their programmable sensitivity range only.

5.7.3 Location and Spacing.

5.7.3.1* General.

5.7.3.1.1 The location and spacing of smoke detectors shall be based upon the anticipated smoke flows due to the plume and ceiling jet produced by the anticipated fire as well as any pre-existing ambient air flows that could exist in the protected compartment.

5.7.3.1.2 The design shall account for the contribution of the following factors in predicting detector response to the anticipated fires to which the system is intended to respond:

(1) Ceiling shape and surface
(2) Ceiling height
(3) Configuration of contents in the protected area
(4) Combustion characteristics and probable equivalence ratio of the anticipated fires involving the fuel loads within the protected area
(5) Compartment ventilation
(6) Ambient temperature, pressure, altitude, humidity, and atmosphere

5.7.3.1.3 If the intent is to protect against a specific hazard, the detector(s) shall be permitted to be installed closer to the hazard in a position where the detector can intercept the smoke.

5.7.3.2* Spot-Type Smoke Detectors.

5.7.3.2.1* Spot-type smoke detectors shall be located on the ceiling not less than 100 mm (4 in.) from a sidewall to the near edge or, if on a sidewall, between 100 mm and 300 mm (4 in. and 12 in.) down from the ceiling to the top of the detector.

5.7.3.2.2* To minimize dust contamination, smoke detectors, where installed under raised floors, shall be mounted only in an orientation for which they have been listed.

5.7.3.2.3 On smooth ceilings, spacing for spot-type smoke detectors shall be in accordance with 5.7.3.2.3.1 through 5.7.3.2.3.5.

5.7.3.2.3.1* In the absence of specific performance-based design criteria, smoke detectors shall be permitted to be located using 9.1 m (30 ft) spacing.

The text of 5.7.3.2.3.1 has been revised by a tentative interim amendment (TIA). See page 1.

5.7.3.2.3.2 In all cases, the manufacturer's published instructions shall be followed.

5.7.3.2.3.3 Other spacing shall be permitted to be used depending on ceiling height, different conditions, or response requirements.

5.7.3.2.3.4 For the detection of flaming fires, the guidelines in Annex B shall be permitted to be used.

5.7.3.2.3.5* For smooth ceilings, all points on the ceiling shall have a detector within a distance equal to 0.7 times the selected spacing.

5.7.3.2.4* For solid joist and beam construction, spacing for spot-type smoke detectors shall be in accordance with 5.7.3.2.4.1 through 5.7.3.2.4.5.

5.7.3.2.4.1 Solid joists shall be considered equivalent to beams for smoke detector spacing guidelines.

5.7.3.2.4.2 For level ceilings the following shall apply:

(1) For ceilings with beam depths of less than 10 percent of the ceiling height (0.1 *H*), smooth ceiling spacing shall be permitted.
(2) For ceilings with beam depths equal to or greater than 10 percent of the ceiling height (0.1 *H*) and beam spacing equal to or greater than 40 percent of the ceiling height (0.4 *H*), spot-type detectors shall be located on the ceiling in each beam pocket.

Copyright National Fire Protection Association
Provided by IHS under license with NFPA
No reproduction or networking permitted without license from IHS
Not for Resale

(3)*For waffle or pan-type ceilings with beams or solid joists no greater than 600 mm (24 in.) deep and no greater than 3.66 m (12 ft) center-to-center spacing, the following shall be permitted:
   (a) Smooth ceiling spacing including those provisions permitted for irregular areas in 5.6.5.1.2, substituting "selected spacing" for "listed spacing"
   (b) Location of spot-type smoke detectors on ceilings or on the bottom of beams
(4)*For corridors 4.5 m (15 ft) in width or less having ceiling beams or solid joists perpendicular to the corridor length, the following shall be permitted:
   (a) Smooth ceiling spacing including those provisions permitted for irregular areas in 5.6.5.1.2, substituting "selected spacing" for "listed spacing"
   (b) Location of spot-type smoke detectors on ceilings, sidewalls, or the bottom of beams or solid joists
(5) For rooms of 84 m^2 (900 ft^2) area or less, only one smoke detector shall be required.

5.7.3.2.4.3* For sloped ceilings with beams running parallel to (up) the slope, spacing shall comply with the following:

(1) The spacing for level beamed ceilings shall be used.
(2) The ceiling height shall be taken as the average height over slope.
(3) For slopes greater than 10 degrees, the detectors located at one-half the spacing from the low end shall not be required.
(4) Spacings shall be measured along a horizontal projection of the ceilings.

5.7.3.2.4.4 For sloped ceilings with beams running perpendicular to (across) the slope, spacing shall comply with the following:

(1) The spacing for level beamed ceilings shall be used.
(2) The ceiling height shall be taken as the average height over slope.

5.7.3.2.4.5 For sloped ceilings with solid joists, the detectors shall be located on the bottom of the joist.

5.7.3.3 Air Sampling–Type Smoke Detector.

5.7.3.3.1 Each sampling port of an air sampling–type smoke detector shall be treated as a spot-type detector for the purpose of location and spacing.

5.7.3.3.2 Maximum air sample transport time from the farthest sampling port to the detector shall not exceed 120 seconds.

5.7.3.3.3* Sampling pipe networks shall be designed on the basis of, and shall be supported by, sound fluid dynamic principles to ensure required performance.

5.7.3.3.4 Sampling pipe network design details shall include calculations showing the flow characteristics of the pipe network and each sample port.

5.7.3.3.5 Air-sampling detectors shall give a trouble signal if the airflow is outside the manufacturer's specified range.

5.7.3.3.6* The sampling ports and in-line filter, if used, shall be kept clear in accordance with the manufacturer's published instructions.

5.7.3.3.7 Air-sampling network piping and fittings shall be airtight and permanently fixed.

5.7.3.3.8 Sampling system piping shall be conspicuously identified as "SMOKE DETECTOR SAMPLING TUBE — DO NOT DISTURB," as follows:

(1) At changes in direction or branches of piping
(2) At each side of penetrations of walls, floors, or other barriers
(3) At intervals on piping that provide visibility within the space, but no greater than 6 m (20 ft)

5.7.3.4* Projected Beam–Type Smoke Detectors.

5.7.3.4.1 Projected beam–type smoke detectors shall be located in accordance with the manufacturer's published instructions.

5.7.3.4.2 The effects of stratification shall be evaluated when locating the detectors.

5.7.3.4.3 The beam length shall not exceed the maximum permitted by the equipment listing.

5.7.3.4.4 If mirrors are used with projected beams, the mirrors shall be installed in accordance with the manufacturer's published instructions.

5.7.3.4.5 A projected beam–type smoke detector shall be considered equivalent to a row of spot-type smoke detectors for level and sloping ceiling applications.

5.7.3.4.6 Projected beam–type detectors and mirrors shall be mounted on stable surfaces to prevent false or erratic operation due to movement.

5.7.3.4.7 The beam shall be designed so that small angular movements of the light source or receiver do not prevent operation due to smoke and do not cause nuisance alarms.

5.7.3.4.8* The light path of projected beam–type detectors shall be kept clear of opaque obstacles at all times.

5.7.3.5* Peaked. Detectors shall first be spaced and located within 900 mm (3 ft) of the peak, measured horizontally. The number and spacing of additional detectors, if any, shall be based on the horizontal projection of the ceiling.

5.7.3.6* Shed. Detectors shall first be spaced and located within 900 mm (3 ft) of the high side of the ceiling, measured horizontally. The number and spacing of additional detectors, if any, shall be based on the horizontal projection of the ceiling.

5.7.3.7 Raised Floors and Suspended Ceilings. Spaces beneath raised floors and above suspended ceilings shall be treated as separate rooms for smoke detector spacing purposes. Detectors installed beneath raised floors or above suspended ceilings, or both, including raised floors and suspended ceilings used for environmental air, shall not be used in lieu of providing detection within the room.

5.7.3.7.1 For raised floors the following shall apply:

(1) Detectors installed beneath raised floors shall be spaced in accordance with 5.7.3.1, 5.7.3.1.3, and 5.7.3.2.2.
(2) Where the area beneath the raised floor is also used for environmental air, detector spacing shall also conform to 5.7.4.1 and 5.7.4.2.

5.7.3.7.2 For suspended ceilings the following shall apply:

(1) Detector spacing above suspended ceilings shall conform to the requirements of 5.7.3 for the ceiling configuration.

Copyright National Fire Protection Association
Provided by IHS under license with NFPA
No reproduction or networking permitted without license from IHS
Not for Resale

(2) Where detectors are installed in ceilings used for environmental air, detector spacing shall also conform to 5.7.4.1 and 5.7.4.2.

5.7.3.8* Partitions. Where partitions extend to within 15 percent of the ceiling height, the spaces separated by the partitions shall be considered as separate rooms.

5.7.4 Heating, Ventilating, and Air Conditioning (HVAC).

5.7.4.1* In spaces served by air-handling systems, detectors shall not be located where airflow prevents operation of the detectors.

5.7.4.2 Detectors installed in plenums shall comply with 5.7.4.2.1 and 5.7.4.2.2.

5.7.4.2.1 In under-floor spaces and above-ceiling spaces that are used as HVAC plenums, detectors shall be listed for the anticipated environment as required by 5.7.1.8. Detector spacings and locations shall be selected on the basis of anticipated airflow patterns and fire type.

5.7.4.2.2* Detectors placed in environmental air ducts or plenums shall not be used as a substitute for open area detectors. Where detectors are used for the control of smoke spread, the requirements of Section 5.16 shall apply. Where open area protection is required, 5.7.3 shall apply.

5.7.5 Special Considerations.

5.7.5.1 Spot-Type Detectors.

5.7.5.1.1 Combination and multi-sensor smoke detectors that have a fixed-temperature element as part of the unit shall be selected in accordance with Table 5.6.2.1.1 for the maximum ceiling temperature expected in service.

5.7.5.1.2* Holes in the back of a detector shall be covered by a gasket, sealant, or equivalent means, and the detector shall be mounted so that airflow from inside or around the housing does not prevent the entry of smoke during a fire or test condition.

5.7.5.2* High-Rack Storage. The location and spacing of smoke detectors for high-rack storage shall address the commodity, quantity, and configuration of the rack storage.

5.7.5.3 High Air Movement Areas.

5.7.5.3.1 General. The purpose and scope of 5.7.5.3 shall be to provide location and spacing guidance for smoke detectors intended for early warning of fire in high air movement areas.

Exception: Detectors provided for the control of smoke spread are covered by the requirements of Section 5.16.

5.7.5.3.2 Location. Smoke detectors shall not be located directly in the airstream of supply registers.

5.7.5.3.3* Spacing. Smoke detector spacing shall be in accordance with Table 5.7.5.3.3 and Figure 5.7.5.3.3.

Exception: Air-sampling or projected beam smoke detectors installed in accordance with the manufacturer's published instructions.

5.7.5.3.4 HVAC Mechanical Rooms. Where HVAC mechanical rooms are used as an air plenum for return air, the spacings of smoke detectors shall not be required to be reduced based on the number of air changes.

5.7.6 Video Image Smoke Detection.

5.7.6.1 Video image smoke detection systems and all of the components thereof, including hardware and software, shall be listed for the purpose of smoke detection.

Table 5.7.5.3.3 Smoke Detector Spacing Based on Air Movement

Minutes per Air Change	Air Changes per Hour	Spacing per Detector	
		m^2	ft^2
1	60	11.61	125
2	30	23.23	250
3	20	34.84	375
4	15	46.45	500
5	12	58.06	625
6	10	69.68	750
7	8.6	81.29	875
8	7.5	83.61	900
9	6.7	83.61	900
10	6	83.61	900

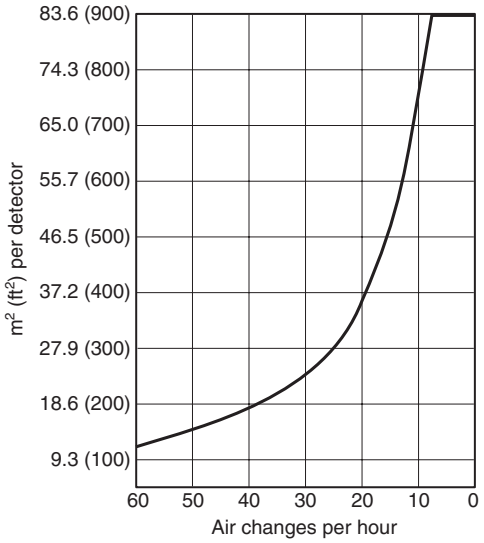

FIGURE 5.7.5.3.3 High Air Movement Areas (Not to be Used for Under-Floor or Above-Ceiling Spaces).

5.7.6.2 Video image smoke detection systems shall comply with all of the applicable requirements of Chapters 1, 4, 5, 6, and 10 of this Code.

5.7.6.2.1 Systems shall be designed in accordance with the performance-based design requirements of Section 5.3.

5.7.6.2.2 The location and spacing of video image smoke detectors shall comply with the requirements of 5.10.5.

5.7.6.3* Video signals generated by cameras that are components of video image smoke detection systems shall be permitted to be transmitted to other systems for other uses only through output connections provided specifically for that purpose by the video system manufacturer.

5.7.6.4* All component controls and software shall be protected from unauthorized changes. All changes to the software or component settings shall be tested in accordance with Chapter 10.

Copyright National Fire Protection Association
Provided by IHS under license with NFPA
No reproduction or networking permitted without license from IHS
Not for Resale

5.8 Radiant Energy–Sensing Fire Detectors.

5.8.1* General.

5.8.1.1 The radiant energy detection design documentation shall state the required performance objective of the system.

5.8.1.2 The purpose and scope of Section 5.8 shall be to provide requirements for the selection, location, and spacing of fire detectors that sense the radiant energy produced by burning substances. These detectors shall be categorized as flame detectors and spark/ember detectors.

5.8.2* Fire Characteristics and Detector Selection.

5.8.2.1* The type and quantity of radiant energy–sensing fire detectors shall be determined on the basis of the performance characteristics of the detector and an analysis of the hazard, including the burning characteristics of the fuel, the fire growth rate, the environment, the ambient conditions, and the capabilities of the extinguishing media and equipment.

5.8.2.2* The selection of the radiant energy–sensing detectors shall be based on the following:

(1) Matching of the spectral response of the detector to the spectral emissions of the fire or fires to be detected
(2) Minimizing the possibility of spurious nuisance alarms from non-fire sources inherent to the hazard area

5.8.3 Spacing Considerations.

5.8.3.1 General Rules.

5.8.3.1.1* Radiant energy–sensing fire detectors shall be employed consistent with the listing or approval and the inverse square law, which defines the fire size versus distance curve for the detector.

5.8.3.1.2 Detector quantity shall be based on the detectors being positioned so that no point requiring detection in the hazard area is obstructed or outside the field of view of at least one detector.

5.8.3.2 Spacing Considerations for Flame Detectors.

5.8.3.2.1* The location and spacing of detectors shall be the result of an engineering evaluation that includes the following:

(1) Size of the fire that is to be detected
(2) Fuel involved
(3) Sensitivity of the detector
(4) Field of view of the detector
(5) Distance between the fire and the detector
(6) Radiant energy absorption of the atmosphere
(7) Presence of extraneous sources of radiant emissions
(8) Purpose of the detection system
(9) Response time required

5.8.3.2.2 The system design shall specify the size of the flaming fire of given fuel that is to be detected.

5.8.3.2.3* In applications where the fire to be detected could occur in an area not on the optical axis of the detector, the distance shall be reduced or detectors shall be added to compensate for the angular displacement of the fire in accordance with the manufacturer's published instructions.

5.8.3.2.4* In applications in which the fire to be detected is of a fuel that differs from the test fuel used in the process of listing or approval, the distance between the detector and the fire shall be adjusted consistent with the fuel specificity of the detector as established by the manufacturer.

5.8.3.2.5 Because flame detectors are line-of-sight devices, their ability to respond to the required area of fire in the zone that is to be protected shall not be compromised by the presence of intervening structural members or other opaque objects or materials.

5.8.3.2.6* Provisions shall be made to sustain detector window clarity in applications where airborne particulates and aerosols coat the detector window between maintenance intervals and affect sensitivity.

5.8.3.3 Spacing Considerations for Spark/Ember Detectors.

5.8.3.3.1* The location and spacing of detectors shall be the result of an engineering evaluation that includes the following:

(1) Size of the spark or ember that is to be detected
(2) Fuel involved
(3) Sensitivity of the detector
(4) Field of view of the detector
(5) Distance between the fire and the detector
(6) Radiant energy absorption of the atmosphere
(7) Presence of extraneous sources of radiant emissions
(8) Purpose of the detection systems
(9) Response time required

5.8.3.3.2* The system design shall specify the size of the spark or ember of the given fuel that the detection system is to detect.

5.8.3.3.3 Spark detectors shall be positioned so that all points within the cross section of the conveyance duct, conveyor, or chute where the detectors are located are within the field of view *(as defined in 3.3.62)* of at least one detector.

5.8.3.3.4* The location and spacing of the detectors shall be adjusted using the inverse square law, modified for the atmospheric absorption and the absorption of nonburning fuel suspended in the air in accordance with the manufacturer's published instructions.

5.8.3.3.5* In applications where the sparks to be detected could occur in an area not on the optical axis of the detector, the distance shall be reduced or detectors shall be added to compensate for the angular displacement of the fire in accordance with the manufacturer's published instructions.

5.8.3.3.6* Provisions shall be made to sustain the detector window clarity in applications where airborne particulates and aerosols coat the detector window and affect sensitivity.

5.8.4 Other Considerations.

5.8.4.1 Radiant energy–sensing detectors shall be protected either by design or installation to ensure that optical performance is not compromised.

5.8.4.2 If necessary, radiant energy–sensing detectors shall be shielded or otherwise arranged to prevent action from unwanted radiant energy.

5.8.4.3 Where used in outdoor applications, radiant energy–sensing detectors shall be shielded or otherwise arranged in a fashion to prevent diminishing sensitivity by conditions such as rain or snow and yet allow a clear field of vision of the hazard area.

Copyright National Fire Protection Association
Provided by IHS under license with NFPA
No reproduction or networking permitted without license from IHS
Not for Resale

5.8.4.4 A radiant energy–sensing fire detector shall not be installed in a location where the ambient conditions are known to exceed the extremes for which the detector has been listed.

5.8.5 Video Image Flame Detection.

5.8.5.1 Video image flame detection systems and all of the components thereof, including hardware and software, shall be listed for the purpose of flame detection.

5.8.5.2 Video image flame detection systems shall comply with all of the applicable requirements of Chapters 1, 4, 5, 6, and 10 of this Code.

5.8.5.3* Video signals generated by cameras that are components of video image flame detection systems shall be permitted to be transmitted to other systems for other uses only through output connections provided specifically for that purpose by the video system manufacturer.

5.8.5.4* All component controls and software shall be protected from unauthorized changes. All changes to the software or component settings shall be tested in accordance with Chapter 10.

5.9 Combination, Multi-Criteria, and Multi-Sensor Detectors.

5.9.1 General. Section 5.9 provides requirements for the selection, location, and spacing of combination, multi-criteria, and multi-sensor detectors.

5.9.2 Combination Detectors.

5.9.2.1 A combination detector shall be listed for each sensor.

5.9.2.2 The device listings shall determine the locations and spacing criteria in accordance with Chapter 5.

5.9.3 Multi-Criteria Detectors.

5.9.3.1 A multi-criteria detector shall be listed for the primary function of the device.

5.9.3.2 Because of the device-specific, software-driven solution of multi-criteria detectors to reduce unwanted alarms and improve detector response to a nonspecific fire source, location and spacing criteria included with the detector installation instructions shall be followed.

5.9.4 Multi-Sensor Detectors.

5.9.4.1 A multi-sensor detector shall be listed for each sensor.

5.9.4.2 Because of the device-specific, software-driven solution of multi-sensor detectors to reduce unwanted alarms and improve detector response to a nonspecific fire source, location and spacing criteria included with the detector installation instructions shall be followed.

5.10 Other Fire Detectors.

5.10.1 Detectors that operate on principles different from those covered by Section 5.6, Section 5.7, and Section 5.8 shall be classified as "other fire detectors." Such detectors shall be installed in all areas where they are required either by other NFPA codes and standards or by the authority having jurisdiction.

5.10.2* "Other fire detectors" shall operate where subjected to the abnormal concentration of combustion effects that occur during a fire, such as water vapor, ionized molecules, or other phenomena for which they are designed.

5.10.3 Detection layout shall be based upon the size and intensity of fire to provide the necessary quantity of required products and related thermal lift, circulation, or diffusion for operation.

5.10.4 Room sizes and contours, airflow patterns, obstructions, and other characteristics of the protected hazard shall be taken into account.

5.10.5 Location and spacing of detectors shall comply with 5.10.5.1 through 5.10.5.3.

5.10.5.1 The location and spacing of detectors shall be based on the principle of operation and an engineering survey of the conditions anticipated in service. The manufacturer's published instructions shall be consulted for recommended detector uses and locations.

5.10.5.2 Detectors shall not be spaced beyond their listed or approved maximums. Closer spacing shall be used where the structural or other characteristics of the protected hazard warrant.

5.10.5.3 The location and sensitivity of the detectors shall be the result of an engineering evaluation that includes the following:

(1) Structural features, size, and shape of the rooms and bays
(2) Occupancy and uses of the area
(3) Ceiling height
(4) Ceiling shape, surface, and obstructions
(5) Ventilation
(6) Ambient environment
(7) Burning characteristics of the combustible materials present
(8) Configuration of the contents in the area to be protected

5.11 Sprinkler Waterflow Alarm-Initiating Devices.

5.11.1* The provisions of Section 5.11 shall apply to devices that initiate an alarm indicating a flow of water in a sprinkler system.

5.11.2* Activation of the initiating device shall occur within 90 seconds of waterflow at the alarm-initiating device when flow occurs that is equal to or greater than that from a single sprinkler of the smallest orifice size installed in the system.

5.11.3 Movement of water due to waste, surges, or variable pressure shall not initiate an alarm signal.

5.12* Detection of the Operation of Other Automatic Extinguishing Systems. The operation of fire extinguishing systems or suppression systems shall initiate an alarm signal by alarm-initiating devices installed in accordance with their individual listings.

5.13 Manually Actuated Alarm-Initiating Devices.

5.13.1 Manual fire alarm boxes shall be used only for fire alarm initiating purposes.

5.13.2 Combination manual fire alarm boxes and guard's signaling stations shall be permitted.

5.13.3 Each manual fire alarm box shall be securely mounted.

5.13.4 The operable part of each manual fire alarm box shall be not less than 1.1 m (3½ ft) and not more than 1.37 m (4½ ft) above floor level.

Copyright National Fire Protection Association
Provided by IHS under license with NFPA
No reproduction or networking permitted without license from IHS
Not for Resale

5.13.5* Manual fire alarm boxes shall be installed so that they are conspicuous, unobstructed, and accessible.

5.13.6 Manual fire alarm boxes shall be located within 1.5 m (5 ft) of the exit doorway opening at each exit on each floor.

5.13.7 Manual fire alarm boxes shall be mounted on both sides of grouped openings over 12.2 m (40 ft) in width, and within 1.5 m (5 ft) of each side of the opening.

5.13.8* Additional manual fire alarm boxes shall be provided so that the travel distance to the nearest fire alarm box will not be in excess of 61 m (200 ft) measured horizontally on the same floor.

5.14 Fire Extinguisher Monitoring Device. A fire extinguisher monitoring device shall indicate those conditions for a specific fire extinguisher required by NFPA 10, *Standard for Portable Fire Extinguishers*, to a fire alarm control unit or other control unit.

5.15 Supervisory Signal-Initiating Devices.

5.15.1 Control Valve Supervisory Signal-Initiating Device.

5.15.1.1 Two separate and distinct signals shall be initiated: one indicating movement of the valve from its normal position (off-normal) and the other indicating restoration of the valve to its normal position.

5.15.1.2 The off-normal signal shall be initiated during the first two revolutions of the hand wheel or during one-fifth of the travel distance of the valve control apparatus from its normal position.

5.15.1.3 The off-normal signal shall not be restored at any valve position except normal.

5.15.1.4 An initiating device for supervising the position of a control valve shall not interfere with the operation of the valve, obstruct the view of its indicator, or prevent access for valve maintenance.

5.15.2 Pressure Supervisory Signal-Initiating Device.

5.15.2.1 Two separate and distinct signals shall be initiated: one indicating that the required pressure has increased or decreased (off-normal) and the other indicating restoration of the pressure to its normal value.

5.15.2.2 The following requirements shall apply to pressure supervisory signal-initiating devices:

(1) A pressure tank supervisory signal-initiating device for a pressurized limited water supply, such as a pressure tank, shall indicate both high- and low-pressure conditions. The off-normal signal shall be initiated when the required pressure increases or decreases by 70 kPa (10 psi).
(2) A pressure supervisory signal-initiating device for a dry-pipe sprinkler system shall indicate both high- and low-pressure conditions. The off-normal signal shall be initiated when the pressure increases or decreases by 70 kPa (10 psi).
(3) A steam pressure supervisory signal-initiating device shall indicate a low-pressure condition. The off-normal signal shall be initiated prior to the pressure falling below 110 percent of the minimum operating pressure of the steam-operated equipment supplied.
(4) An initiating device for supervising the pressure of sources other than those specified in 5.15.2.2(1) through 5.15.2.2(3) shall be provided as required by the authority having jurisdiction.

5.15.3 Water Level Supervisory Signal-Initiating Device.

5.15.3.1 Two separate and distinct signals shall be initiated: one indicating that the required water level has been lowered or raised (off-normal) and the other indicating restoration.

5.15.3.2 A pressure tank signal-initiating device shall indicate both high- and low-water level conditions. The off-normal signal shall be initiated when the water level falls 76 mm (3 in.) or rises 76 mm (3 in.).

5.15.3.3 A supervisory signal-initiating device for other than pressure tanks shall initiate a low-water level signal when the water level falls 300 mm (12 in.).

5.15.4 Water Temperature Supervisory Signal-Initiating Device. A temperature supervisory device for a water storage container exposed to freezing conditions shall initiate two separate and distinctive signals. One signal shall indicate a decrease in water temperature to 4.4°C (40°F) and the other shall indicate its restoration to above 4.4°C (40°F).

5.15.5 Room Temperature Supervisory Signal-Initiating Device. A room temperature supervisory device shall indicate a decrease in room temperature to 4.4°C (40°F) and its restoration to above 4.4°C (40°F).

5.16* Smoke Detectors for Control of Smoke Spread.

5.16.1* Classifications. Smoke detectors installed and used to prevent smoke spread by initiating control of fans, dampers, doors, and other equipment shall be classified in the following manner:

(1) Area detectors that are installed in the related smoke compartments
(2) Detectors that are installed in the air duct systems
(3) Video image smoke detection that is installed in related smoke compartments

5.16.2* Limitations.

5.16.2.1 Detectors that are installed in the air duct system in accordance with 5.16.1(2) shall not be used as a substitute for open area protection.

5.16.2.2 Where open area protection is required, 5.7.3 shall apply.

5.16.3* Purposes.

5.16.3.1 To prevent the recirculation of dangerous quantities of smoke, a detector approved for air duct use shall be installed on the supply side of air-handling systems as required by NFPA 90A, *Standard for the Installation of Air-Conditioning and Ventilating Systems*, and 5.16.4.2.1.

5.16.3.2 If smoke detectors are used to initiate selectively the operation of equipment to control smoke spread, the requirements of 5.16.4.2.2 shall apply.

5.16.3.3 If detectors are used to initiate the operation of smoke doors, the requirements of 5.16.6 shall apply.

5.16.3.4 If duct detectors are used to initiate the operation of smoke dampers within ducts, the requirements of 5.16.5 shall apply.

5.16.4 Application.

5.16.4.1 Area Smoke Detectors within Smoke Compartments. Area smoke detectors within smoke compartments shall be permitted to be used to control the spread of smoke by initiating operation of doors, dampers, and other equipment.

Copyright National Fire Protection Association
Provided by IHS under license with NFPA
No reproduction or networking permitted without license from IHS
Not for Resale

5.16.4.2* Smoke Detection for the Air Duct System.

5.16.4.2.1 Supply Air System. Where the detection of smoke in the supply air system is required by other NFPA standards, a detector(s) listed for the air velocity present and that is located in the supply air duct downstream of both the fan and the filters shall be installed.

Exception: Additional smoke detectors shall not be required to be installed in ducts where the air duct system passes through other smoke compartments not served by the duct.

5.16.4.2.2* Return Air System. Unless otherwise modified by 5.16.4.2.2.1 or 5.16.4.2.2.2, if the detection of smoke in the return air system is required by other NFPA standards, a detector(s) listed for the air velocity present shall be located where the air leaves each smoke compartment, or in the duct system before the air enters the return air system common to more than one smoke compartment.

5.16.4.2.2.1 Additional smoke detectors shall not be required to be installed in ducts where the air duct system passes through other smoke compartments not served by the duct.

5.16.4.2.2.2 Where total coverage smoke detection is installed in all areas of the smoke compartment served by the return air system, installation of air duct detectors in the return air system shall not be required, provided their function is accomplished by the design of the area detection system.

5.16.5 Location and Installation of Detectors in Air Duct Systems.

5.16.5.1 Detectors shall be listed for the purpose for which they are being used.

5.16.5.2* Air duct detectors shall be installed in such a way as to obtain a representative sample of the airstream. This installation shall be permitted to be achieved by any of the following methods:

(1) Rigid mounting within the duct
(2) Rigid mounting to the wall of the duct with the sensing element protruding into the duct
(3) Installation outside the duct with rigidly mounted sampling tubes protruding into the duct
(4) Installation through the duct with projected light beam

5.16.5.3 Detectors shall be mounted in accordance with the manufacturer's published instructions and shall be accessible for cleaning by providing access doors or control units in accordance with NFPA 90A, *Standard for the Installation of Air-Conditioning and Ventilating Systems*.

5.16.5.4 The location of all detectors in air duct systems shall be permanently and clearly identified and recorded.

5.16.5.5 Detectors mounted outside of a duct that employs sampling tubes for transporting smoke from inside the duct to the detector shall be designed and installed to allow verification of airflow from the duct to the detector.

5.16.5.6 Detectors shall be listed for operation over the complete range of air velocities, temperature, and humidity expected at the detector when the air-handling system is operating.

5.16.5.7 All penetrations of a return air duct in the vicinity of detectors installed on or in an air duct shall be sealed to prevent entrance of outside air and possible dilution or redirection of smoke within the duct.

5.16.5.8 Where in-duct smoke detectors are installed in concealed locations more than 3 m (10 ft) above the finished floor or in arrangements where the detector's alarm or supervisory indicator is not visible to responding personnel, the detectors shall be provided with remote alarm or supervisory indication in a location acceptable to the authority having jurisdiction.

5.16.5.9 Where required by 5.16.5.8 and unless the specific detector alarm or supervisory signal is indicated at the control unit, remote alarm or supervisory indicators shall be installed in an accessible location and shall be clearly labeled to indicate both their function and the air-handling unit(s) associated with each detector.

5.16.6 Smoke Detectors for Door Release Service.

5.16.6.1 Smoke detectors that are part of an open area protection system covering the room, corridor, or enclosed space on each side of the smoke door and that are located and spaced as required by 5.7.3 shall be permitted to accomplish smoke door release service.

5.16.6.2 Smoke detectors that are used exclusively for smoke door release service shall be located and spaced as required by 5.16.6.

5.16.6.3 Where smoke door release is accomplished directly from the smoke detector(s), the detector(s) shall be listed for releasing service.

5.16.6.4 Smoke detectors shall be of the photoelectric, ionization, or other approved type.

5.16.6.5 The number of detectors required shall be determined in accordance with 5.16.6.5.1 through 5.16.6.5.4.

5.16.6.5.1 If doors are to be closed in response to smoke flowing in either direction, the requirements of 5.16.6.5.1.1 through 5.16.6.5.1.4 shall apply.

5.16.6.5.1.1 If the depth of wall section above the door is 610 mm (24 in.) or less, one ceiling-mounted smoke detector shall be required on one side of the doorway only, or two wall-mounted detectors shall be required, one on each side of the doorway. Figure 5.16.6.5.1.1, part A or B, shall apply.

5.16.6.5.1.2 If the depth of wall section above the door is greater than 610 mm (24 in.) on one side only, one ceiling-mounted smoke detector shall be required on the higher side of the doorway only, or one wall-mounted detector shall be required on both sides of the doorway. Figure 5.16.6.5.1.1, part D, shall apply.

5.16.6.5.1.3* If the depth of wall section above the door is greater than 610 mm (24 in.) on both sides, two ceiling-mounted or wall-mounted detectors shall be required, one on each side of the doorway. Figure 5.16.6.5.1.1, part F, shall apply.

5.16.6.5.1.4 If a detector is specifically listed for door frame mounting or if a listed combination or integral detector–door closer assembly is used, only one detector shall be required if installed in the manner recommended by the manufacturer's published instructions. Figure 5.16.6.5.1.1, parts A, C, and E, shall apply.

5.16.6.5.2 If door release is intended to prevent smoke transmission from one space to another in one direction only, detectors located in the space to which smoke is to be confined, regardless of the depth of wall section above the door, shall be in accordance with 5.16.6.6. Alternatively, a smoke detector conforming with 5.16.6.5.1.4 shall be permitted to be used.

Copyright National Fire Protection Association
Provided by IHS under license with NFPA
No reproduction or networking permitted without license from IHS
Not for Resale

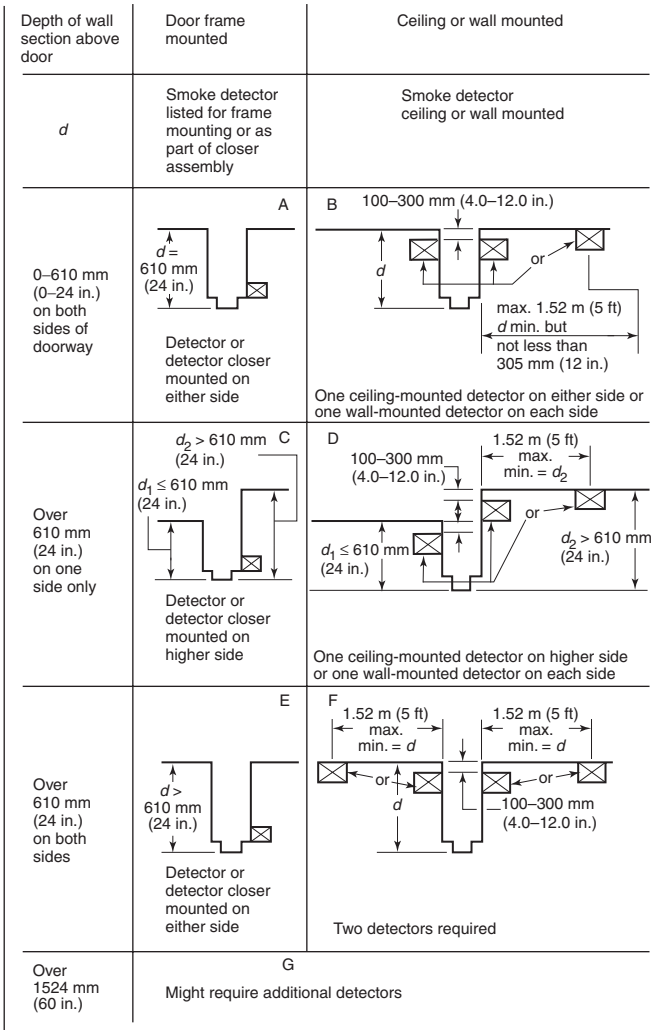

FIGURE 5.16.6.5.1.1 Detector Location Requirements for Wall Sections.

5.16.6.5.3 If there are multiple doorways, additional ceiling-mounted detectors shall be required as specified in 5.16.6.5.3.1 through 5.16.6.5.3.3.

5.16.6.5.3.1 If the separation between doorways exceeds 610 mm (24 in.), each doorway shall be treated separately. Figure 5.16.6.5.3.1, part E, shall apply.

5.16.6.5.3.2 Each group of three or more doorway openings shall be treated separately. Figure 5.16.6.5.3.2 shall apply.

5.16.6.5.3.3 Each group of doorway openings that exceeds 6.1 m (20 ft) in width measured at its overall extremes shall be treated separately. Figure 5.16.6.5.3.3 shall apply.

5.16.6.5.4 If there are multiple doorways and listed door frame-mounted detectors or if listed combination or integral detector–door closer assemblies are used, there shall be one detector for each single or double doorway.

5.16.6.6 The locations of detectors shall be determined in accordance with 5.16.6.6.1 and 5.16.6.6.2.

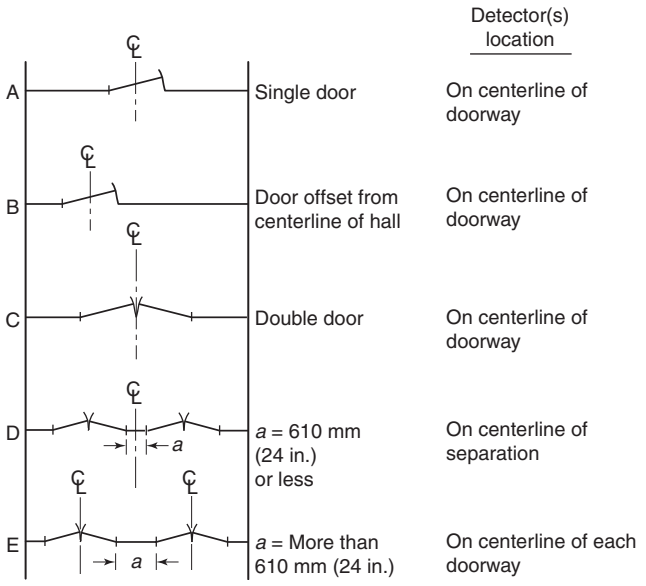

FIGURE 5.16.6.5.3.1 Detector Location Requirements for Single and Double Doors.

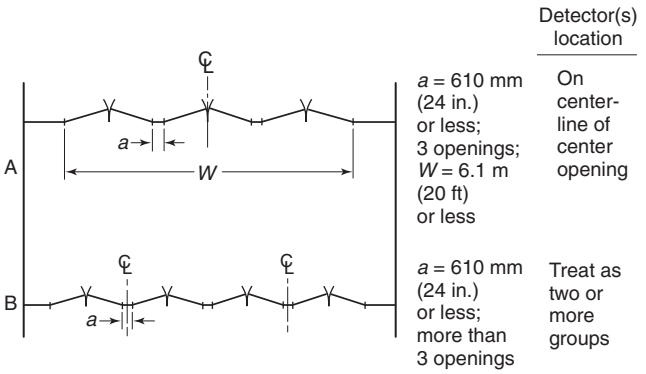

FIGURE 5.16.6.5.3.2 Detector Location Requirements for Group Doorways.

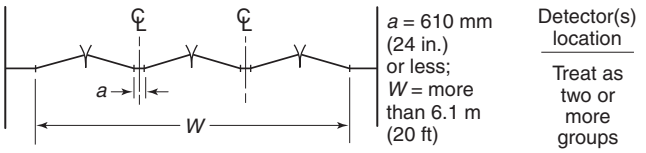

FIGURE 5.16.6.5.3.3 Detector Location Requirements for Group Doorways over 6.1 m (20 ft) in Width.

5.16.6.6.1 If ceiling-mounted smoke detectors are to be installed on a smooth ceiling for a single or double doorway, they shall be located as follows *(Figure 5.16.6.5.3.1 shall apply)*:

(1) On the centerline of the doorway
(2) No more than 1.5 m (5 ft) measured along the ceiling and perpendicular to the doorway *(Figure 5.16.6.5.1.1 shall apply.)*
(3) No closer than shown in Figure 5.16.6.5.1.1, parts B, D, and F

Copyright National Fire Protection Association
Provided by IHS under license with NFPA
No reproduction or networking permitted without license from IHS
Not for Resale

5.16.6.6.2 If ceiling-mounted detectors are to be installed in conditions other than those outlined in 5.16.6.6.1, an engineering evaluation shall be made.

5.17 Mass Notification Systems. See Annex E.

Chapter 6 Protected Premises Fire Alarm Systems

6.1 Application.

6.1.1* The application, installation, and performance of fire alarm systems within protected premises, including fire alarm and supervisory signals, shall comply with the requirements of this chapter.

6.1.2 The requirements of Chapters 4, 5, 7, and 8 shall also apply, unless they are in conflict with this chapter.

6.1.3 The requirements of Chapter 10 shall apply.

6.1.4 The requirements of this chapter shall not apply to Chapter 11 unless otherwise noted.

6.2 General.

6.2.1* Purpose. The systems covered in Chapter 6 shall be for the protection of life or property, or both, by indicating the existence of heat, fire, smoke, or other emergencies impacting the protected premises.

6.2.2 Software and Firmware Control.

6.2.2.1 A record of installed software and firmware version numbers shall be maintained at the location of the fire alarm control unit.

6.2.2.2* All software and firmware shall be protected from unauthorized changes.

6.2.2.3 All changes shall be tested in accordance with 10.4.1.2.

6.2.3* Nonrequired (Voluntary) Systems and Components.

6.2.3.1 Nonrequired protected premises systems and components shall meet the requirements of this Code.

6.2.3.2 Nonrequired systems and components shall be identified on the record drawings required in 4.5.2.3(2).

6.3 System Features. The features required for a protected premises fire alarm system shall be documented as a part of the system design and shall be determined in accordance with 6.3.1 through 6.3.3.

6.3.1 Required Systems. Features for required systems shall be based on the requirements of other applicable codes or statutes that have been adopted by the enforcing jurisdiction.

6.3.2 Nonrequired Systems. The features for a nonrequired system shall be established by the system designer on the basis of the goals and objectives intended by the system owner.

6.3.3 Required Features.

6.3.3.1 Building Fire Alarm Systems. Protected premises fire alarm systems that serve the general fire alarm needs of a building or buildings shall include one or more of the following systems or functions:

(1) Manual alarm signal initiation
(2) Automatic alarm signal initiation
(3) Monitoring of abnormal conditions in fire suppression systems
(4) Activation of fire suppression systems
(5) Activation of fire safety functions
(6) Activation of alarm notification appliances
(7) Emergency voice/alarm communications
(8) Guard's tour supervisory service
(9) Process monitoring supervisory systems
(10) Activation of off-premises signals
(11) Combination systems
(12) Integrated systems

6.3.3.2* Dedicated Function Fire Alarm Systems.

6.3.3.2.1 In facilities without a building fire alarm system, a dedicated function fire alarm system shall be permitted and shall not be required to include other functions or features of a building fire alarm system.

6.3.3.2.2 Where a dedicated function fire alarm system exists and a building fire alarm system is subsequently installed, the systems shall be interconnected and comply with 6.8.2.

6.4 System Performance and Integrity.

6.4.1 Purpose. Section 6.4 provides information that shall be used in the design and installation of protected premises fire alarm and mass notification systems for the protection of life and property.

6.4.2* Circuit Designations. Initiating device circuits, notification appliance circuits, and signaling line circuits shall be designated by class or style, or both, depending on the circuit's capability to continue to operate during specified fault conditions.

6.4.2.1 Class.

6.4.2.1.1 Initiating device circuits, notification appliance circuits, and signaling line circuits shall be permitted to be designated as either Class A or Class B, depending on their performance during nonsimultaneous single circuit fault conditions as specified by the following:

(1) Initiating device circuits and signaling line circuits that transmit an alarm or supervisory signal, or notification appliance circuits that allow all connected devices to operate during a single open or a nonsimultaneous single ground fault on any circuit conductor, shall be designated as Class A.
(2) Initiating device circuits and signaling line circuits that do not transmit an alarm or supervisory signal, or notification appliance circuits that do not allow connected devices to operate beyond the location of a single open on any circuit conductor, shall be designated as Class B.

6.4.2.1.2 An open or ground condition shall result in the annunciation of a trouble signal at the protected premise within 200 seconds as required in 4.4.7.

6.4.2.2 Style.

6.4.2.2.1 In addition to the requirements shown for Class A or Class B, signaling line circuits shall be permitted to be designated as either Style 4, 6, or 7, depending on their ability to meet the alarm and trouble performance requirements shown in Table 6.6.1, during a single open, single ground, wire-to-wire short, simultaneous wire-to-wire short and open, simultaneous wire-to-wire short and ground, and simultaneous open and ground.

Copyright National Fire Protection Association
Provided by IHS under license with NFPA
No reproduction or networking permitted without license from IHS
Not for Resale

6.4.2.2.2* All styles of Class A circuits using physical conductors (e.g., metallic, optical fiber) shall be installed such that the outgoing and return conductors, exiting from and returning to the control unit, respectively, are routed separately. The outgoing and return (redundant) circuit conductors shall not be run in the same cable assembly (i.e., multi-conductor cable), enclosure, or raceway.

Exception: The outgoing and return (redundant) circuit conductors shall be permitted to be run in the same cable assembly, enclosure, or raceway under any of the following conditions:

(1) For a distance not to exceed 3 m (10 ft) where the outgoing and return conductors enter or exit the initiating device, notification appliance, or control unit enclosures
(2) Single conduit/raceway drops to individual devices or appliances
(3) Single conduit/raceway drops to multiple devices or appliances installed within a single room not exceeding 92.9 m^2 (1000 ft^2) in area

6.4.2.2.3 Where the power to a device is supplied over a separate circuit from the signaling line circuit or initiating device circuit, the operation of the power circuit shall meet the performance requirements of the initiating device circuit or signaling line circuit.

6.4.3 Signaling Paths.

6.4.3.1 The class or style of signaling paths (circuits) shall be determined from an evaluation based on the path performance detailed in this Code and on engineering judgment.

6.4.3.2 When determining the integrity and reliability of the interconnecting signaling paths (circuits) installed within the protected premises, the following influences shall be considered:

(1) Transmission media used
(2) Length of the circuit conductors
(3) Total building area covered by and the quantity of initiating devices and notification appliances connected to a single circuit
(4) Effect of a fault in the fire alarm system on the objectives stated in Section 6.2
(5) Nature of the hazard present within the protected premises
(6) Functional requirements of the system necessary to provide the level of protection required for the system
(7) Size and nature of the population of the protected premises

6.4.3.3 Results of the evaluation required by 6.4.3.1 shall be included with the documentation required by 4.5.1.1.

6.5* Performance of Initiating Device Circuits (IDCs). The assignment of class designations to initiating device circuits shall be based on their performance capabilities under abnormal (fault) conditions in accordance with the requirements of Table 6.5.

6.6* Performance of Signaling Line Circuits (SLC).

6.6.1 The assignment of class designations or style designations, or both, to signaling line circuits shall be based on their performance capabilities under abnormal (fault) conditions in accordance with the requirements of Table 6.6.1.

6.6.2 Where digital communications are used, inability to send or receive digital signals over a signaling line circuit shall be indicated by a trouble signal.

6.7 Performance of Notification Appliance Circuits (NACs). The assignment of class designations to notification appliance circuits shall be based on their performance capabilities under abnormal (fault) conditions in accordance with the requirements of Table 6.7.

6.8 System Requirements.

6.8.1 General.

6.8.1.1* Actuation Time. Actuation of alarm notification appliances or emergency voice communications, fire safety functions, and annunciation at the protected premises shall occur within 10 seconds after the activation of an initiating device.

6.8.1.2* Presignal Feature. If permitted by the authority having jurisdiction, systems shall be permitted to have a feature that allows initial fire alarm signals to sound only in department offices, control rooms, fire brigade stations, or other constantly attended central locations and for which human action is subsequently required to activate a general alarm, or a feature that allows the control equipment to delay the general alarm by more than 1 minute after the start of the alarm processing. If there is a connection to a remote location, the transmission of the alarm signal to the supervising station shall activate upon the initial alarm signal.

6.8.1.3 Positive Alarm Sequence.

6.8.1.3.1 Systems that have positive alarm features complying with 6.8.1.3 shall be permitted if approved by the authority having jurisdiction.

6.8.1.3.1.1 The signal from an automatic fire detection device selected for positive alarm sequence operation shall be acknowledged at the fire alarm control unit by trained personnel within 15 seconds of annunciation in order to initiate the alarm investigation phase. If the signal is not acknowledged within 15 seconds, notification signals in accordance with the building evacuation or relocation plan and remote signals shall be automatically and immediately activated.

Table 6.5 Performance of Initiating Device Circuits (IDCs)

Class	B			A		
	Alm	Trbl	ARC	Alm	Trbl	ARC
Abnormal Condition	**1**	**2**	**3**	**4**	**5**	**6**
Single open	—	X	—	—	X	R
Single ground	—	X	R	—	X	R

Alm: Alarm. Trbl: Trouble. ARC: Alarm receipt capability during abnormal condition. R: Required capacity.
X: Indication required at protected premises and as required by Chapter 8.

--`,,```,,,,````-`-`,,`,,`,`,,`---
Copyright National Fire Protection Association
Provided by IHS under license with NFPA
No reproduction or networking permitted without license from IHS
Not for Resale

Table 6.6.1 Performance of Signaling Line Circuits (SLCs)

Class	B			A			A		
Style	4			6			7		
	Alm	Trbl	ARC	Alm	Trbl	ARC	Alm	Trbl	ARC
Abnormal Condition	1	2	3	4	5	7	8	9	10
Single open	—	X	—	—	X	R	—	X	R
Single ground	—	X	R	—	X	R	—	X	R
Wire-to-wire short	—	X	—	—	X	—	—	X	R
Wire-to-wire short & open	—	X	—	—	X	—	—	X	—
Wire-to-wire short & ground	—	X	—	—	X	—	—	X	—
Open and ground	—	X	—	—	X	R	—	X	R
Loss of carrier (if used)/channel interface	—	X	—	—	X	—	—	X	—

Alm: Alarm. Trbl: Trouble. ARC: Alarm receipt capability during abnormal condition. R: Required capability.
X: Indication required at protected premises and as required by Chapter 8.

Table 6.7 Notification Appliance Circuits (NACs)

Class	B		A	
	Trouble Indication at Protected Premises	Alarm Capability During Abnormal Conditions	Trouble Indication at Protected Premises	Alarm Capability During Abnormal Conditions
Abnormal Condition	1	2	3	4
Single open	X	—	X	R
Single ground	X	R	X	R
Wire-to-wire short	X	—	X	—

X: Indication required at protected premises. R: Required capability.

6.8.1.3.1.2 Trained personnel shall have up to 180 seconds during the alarm investigation phase to evaluate the fire condition and reset the system. If the system is not reset during the investigation phase, notification signals in accordance with the building evacuation or relocation plan and remote signals shall be automatically and immediately activated.

6.8.1.3.2 If a second automatic fire detector selected for positive alarm sequence is actuated during the alarm investigation phase, notification signals in accordance with the building evacuation or relocation plan and remote signals shall be automatically and immediately activated.

6.8.1.3.3 If any other initiating device is actuated, notification signals in accordance with the building evacuation or relocation plan and remote signals shall be automatically and immediately activated.

6.8.1.3.4* The system shall provide means for bypassing the positive alarm sequence.

6.8.2* Fire Alarm Control Units.

6.8.2.1 Fire alarm systems shall be permitted to be either integrated systems combining all detection, notification, and auxiliary functions in a single system or a combination of component subsystems. Fire alarm system components shall be permitted to share control equipment or shall be able to operate as stand-alone subsystems, but, in any case, they shall be arranged to function as a single system.

Exception: Where the building is not served by a building fire alarm system, independent dedicated function fire alarm systems and/or releasing fire alarm systems shall not be required to be interconnected to function as a single system.

The text of 6.8.2.1 has been revised by a tentative interim amendment (TIA). See page 1.

6.8.2.2 All component subsystems shall be capable of simultaneous, full-load operation without degradation of the required overall system performance.

6.8.2.3 The method of interconnection of fire alarm control units shall meet the monitoring requirements of 4.4.7 and NFPA 70, *National Electrical Code*, Article 760, and shall be achieved by the following recognized means:

(1) Electrical contacts listed for the connected load
(2) Data communications over signaling line circuit(s) dedicated to the fire alarm or shared with other premises operating systems
(3) Other listed methods

Copyright National Fire Protection Association
Provided by IHS under license with NFPA
No reproduction or networking permitted without license from IHS
Not for Resale

6.8.2.4 Where the signaling line circuit is shared by other premises operating systems, operation shall be in accordance with 6.8.4.

6.8.2.4.1 All signal control and transport equipment (such as routers, servers) located in a critical fire alarm or fire safety function signaling path shall be listed for fire alarm service unless the following conditions are met:

(1) The equipment meets the performance requirements of 4.4.4.1.
(2) The equipment is provided with primary and secondary power and monitored for integrity as required in Section 4.4.
(3) All programming and configuration ensure a fire alarm system actuation time as required in 6.8.1.1.
(4) System bandwidth is monitored to confirm that all communications between equipment that is critical to the operation of the fire alarm system or fire safety functions take place within 10 seconds; failure shall be indicated within 200 seconds.
(5) Failure of any equipment that is critical to the operation of the fire alarm system or fire safety functions is indicated at the master fire alarm control unit within 200 seconds.

6.8.2.4.2 A listed barrier gateway, integral with or attached to each control unit or group of control units, as appropriate, shall be provided to prevent the other systems from interfering with or controlling the fire alarm system.

6.8.2.5 Each interconnected fire alarm control unit shall be separately monitored for alarm, supervisory, and trouble conditions.

6.8.2.6 Interconnected fire alarm control unit alarm signals shall be permitted to be monitored by zone or by combined common signals.

6.8.2.7 Protected premises fire alarm control units shall be capable of being reset or silenced only from the fire alarm control unit at the protected premises unless otherwise permitted by 6.8.2.8.

6.8.2.8 Remote resetting and silencing of a fire alarm control unit from other than the protected premises shall be permitted with the approval of the authority having jurisdiction.

6.8.3 Protected Premises Fire Alarm Systems Interconnected with Dwelling Unit Fire Warning Equipment.

6.8.3.1 A protected premises fire alarm system shall be permitted to be interconnected to household fire alarm system(s) for the purpose of activating the notification appliances connected to the household fire alarm system(s).

6.8.3.2 The status of dwelling unit smoke alarms shall be permitted to be displayed at the protected premises control unit and annunciators.

6.8.3.3 If interconnected, an alarm condition at the protected premises fire alarm system shall cause the alarm notification appliance(s) within the family living unit of the dwelling unit fire warning system to become energized. The notification appliances shall remain energized until the protected premises fire alarm system is silenced or reset.

6.8.3.4 The interconnection circuit or path from the protected premises fire alarm system to the dwelling unit fire warning system shall be monitored for integrity by the protected premises fire alarm system in accordance with 4.4.7.

6.8.3.5 An alarm condition occurring at the dwelling unit fire warning system or the operation of any test switches provided as part of the dwelling unit fire warning equipment shall not cause an alarm condition at the protected premises fire alarm system.

6.8.4 Combination Systems.

6.8.4.1* Fire alarm systems shall be permitted to share components, equipment, circuitry, and installation wiring with non–fire alarm systems.

6.8.4.2 Operation of non–fire system function(s) originating within a connected non–fire system shall not interfere with the required operation of the fire alarm system unless otherwise permitted by this Code.

6.8.4.3* Short circuits, open circuits, or grounds in this equipment or between this equipment and the fire alarm system wiring shall not interfere with the monitoring for integrity of the fire alarm system or prevent alarm, supervisory, or fire safety control signal transmissions.

6.8.4.4 All non–fire alarm components of a combination system shall be listed for fire alarm use unless removal, replacement, failure, or maintenance procedure on any non–fire alarm hardware, software, or circuits does not impair the required operation of the fire alarm system.

6.8.4.5* Speakers used as alarm notification appliances on fire alarm systems shall also be permitted to be used for non-emergency purposes, provided that condition (1) or (2) is met:

(1) The fire command center is constantly attended by trained personnel and selective paging is permitted by the authority having jurisdiction.
(2) All of the following conditions are met:
   (a) The speakers and associated audio equipment are installed or located with safeguards to resist tampering or misadjustment of those components essential for intended emergency notification.
   (b) The monitoring integrity requirements of 4.4.7 and 6.9.8 shall continue to be met while the system is used for non-emergency purposes.
   (c) It is permitted by the local authority having jurisdiction.

6.8.4.6 Speakers used as alarm notification appliances on fire alarm systems shall also be permitted to be used for mass notification systems.

6.8.4.7* In combination systems, fire alarm signals shall be distinctive, clearly recognizable, and, with the exception of mass notification inputs, take precedence over any other signal even when a non–fire alarm signal is initiated first and shall be indicated as follows in descending order of priority unless otherwise permitted by this Code:

(1) Signals associated with life safety
(2) Signals associated with property protection
(3) Trouble signals associated with life and/or property protection
(4) All other signals

6.8.4.8 If the authority having jurisdiction determines that the information being displayed or annunciated on a combination system is excessive and is causing confusion and delayed response to a fire emergency, the authority having jurisdiction shall be permitted to require that the display or annunciation of information for the fire alarm system be separate from, and have priority in accordance with 6.8.4.7, over information for the non–fire alarm systems.

Copyright National Fire Protection Association
Provided by IHS under license with NFPA
No reproduction or networking permitted without license from IHS
Not for Resale

6.8.4.9* Live voice instructions originating from the protected premises fire or mass notification systems shall override all previously initiated signals and shall have priority over both of the following:

(1) Any subsequent automatically initiated signals on that channel
(2) Remotely generated mass notification messages

6.8.4.10* Signals from carbon monoxide detectors and carbon monoxide detection systems transmitted to a fire alarm system shall be permitted to be supervisory signals.

6.8.4.11* Fire Extinguisher Monitoring Devices and Systems. Signals from a fire extinguisher monitoring device or fire extinguisher monitoring system transmitted to a fire alarm system shall be permitted to be supervisory signals.

6.8.5 Fire Alarm System Inputs.

6.8.5.1 General.

6.8.5.1.1 All initiating devices shall be installed in accordance with Chapter 5 and tested in accordance with Chapter 10.

6.8.5.1.2* For fire alarm systems employing automatic fire detectors or waterflow detection devices, at least one fire alarm box shall be provided to initiate a fire alarm signal. This fire alarm box shall be located where required by the authority having jurisdiction.

Exception: Fire alarm systems dedicated to elevator recall control and supervisory service as permitted in 6.16.3.

6.8.5.2 Alarm Signal Initiation — Manual. Manual fire alarm signal initiation shall comply with the requirements of Section 5.13.

6.8.5.2.1 If signals from fire alarm boxes and other fire alarm–initiating devices within a building are transmitted over the same signaling line circuit, there shall be no interference with fire alarm box signals when both types of initiating devices are operated at the same time.

6.8.5.2.2 Provision of the shunt noninterfering method of operation shall be permitted for this performance.

6.8.5.3 Alarm Signal Initiation — Initiating Devices with Separate Power and Signaling Wiring.

6.8.5.3.1 Automatic fire alarm signal initiating devices that have integral trouble signal contacts shall be connected to the initiating device circuit so that a trouble condition within a device does not impair alarm transmission from any other initiating device.

Exception: Where the trouble condition is caused by electrical disconnection of the device or by removing the initiating device from its plug-in base.

6.8.5.3.2* Automatic fire alarm signal-initiating devices that use a nonintegral device to monitor the integrity of the power supply wiring to the individual initiating devices shall have the nonintegral device connected to the initiating device circuit so that a fault on the power supply wiring does not impair alarm transmission from any operational initiating device.

6.8.5.4 Alarm Signal Initiation — Detection Devices.

6.8.5.4.1* Systems equipped with alarm verification features shall be permitted under the following conditions:

(1) The alarm verification feature is not initially enabled unless conditions or occupant activities that are expected to cause nuisance alarms are anticipated in the area that is protected by the smoke detectors. Enabling of the alarm verification feature shall be protected by password or limited access.
(2) A smoke detector that is continuously subjected to a smoke concentration above alarm threshold does not delay the system functions of 4.4.3, 6.8.1.1, or 6.16.2.1 by more than 1 minute.
(3) Actuation of an alarm-initiating device other than a smoke detector causes the system functions of 4.4.3, 6.8.1.1, or 6.16.2.1 without additional delay.
(4) The current status of the alarm verification feature is shown on the record of completion *(see Figure 4.5.2.1, item 10).*

6.8.5.4.2 If automatic drift compensation of sensitivity for a fire detector is provided, the fire alarm control unit shall identify the affected detector when the limit of compensation is reached.

6.8.5.4.3 Systems that require the operation of two automatic detectors to initiate the alarm response shall be permitted, provided the following conditions are satisfied:

(1) The systems are not prohibited by the authority having jurisdiction.
(2) At least two automatic detectors are in each protected space.
(3) The alarm verification feature is not used.

6.8.5.4.4 For systems that require the operation of two automatic detectors to initiate fire safety functions or to actuate fire extinguishing or suppression systems, the detectors shall be installed at the spacing determined in accordance with Chapter 5.

6.8.5.4.5 For systems that require the operation of two automatic detectors to actuate public mode notification, the detectors shall be installed at a linear spacing not more than 0.7 times the linear spacing determined in accordance with Chapter 5.

6.8.5.5* Alarm Signal Initiation — Sprinkler Systems.

6.8.5.5.1 Where required to be electronically monitored, waterflow alarm-initiating devices shall be connected to a dedicated function fire alarm control unit designated as "sprinkler waterflow and supervisory system," and permanently identified on the control unit and record drawings.

Exception: Where waterflow alarm-initiating devices are connected to a building fire alarm system, a dedicated function fire alarm control unit shall not be required.

6.8.5.5.2* The number of waterflow alarm–initiating devices permitted to be connected to a single initiating device circuit shall not exceed five.

6.8.5.6* Supervisory Signal Initiation — Sprinkler Systems.

6.8.5.6.1 Where required to be electronically monitored, supervisory signal-initiating devices shall be connected to a dedicated function fire alarm control unit designated as "sprinkler waterflow and supervisory system," and permanently identified on the control unit and record drawings.

Exception: Where supervisory signal-initiating devices are connected to a building fire alarm system, a dedicated function fire alarm control unit shall not be required.

--`,,```,,,,````-`-`,,`,,`,`,,`---

Copyright National Fire Protection Association
Provided by IHS under license with NFPA
No reproduction or networking permitted without license from IHS
Not for Resale

6.8.5.6.2* The number of supervisory signal-initiating devices permitted to be connected to a single initiating device circuit shall not exceed 20.

6.8.5.7 Alarm Signal Initiation — Fire Suppression Systems Other Than Sprinklers.

6.8.5.7.1 Where required to be monitored and a building fire alarm system is installed, the actuation of a fire suppression system shall annunciate an alarm or supervisory condition at the building fire alarm control unit.

6.8.5.7.2 The integrity of each fire suppression system actuating device and its circuit shall comply with 4.4.7.1 and other applicable NFPA standards.

6.8.5.8* Supervisory Signal Initiation — Fire Suppression Systems Other Than Sprinklers.

6.8.5.8.1 Where required to be monitored and a building fire alarm system is installed, an off-normal condition of a fire suppression system shall annunciate a supervisory condition at the building fire alarm control unit.

6.8.5.8.2 Supervisory signals that latch in the off-normal state and require manual reset of the system to restore them to normal shall be permitted.

6.8.5.9 Signal Initiation — Fire Pump.

6.8.5.9.1 Where fire pumps are required to be monitored and a building fire alarm system is installed, a pump running signal shall be permitted to be a supervisory or alarm signal.

6.8.5.9.2 Where fire pumps are required to be monitored and a building fire alarm system is installed, signals other than pump running shall be supervisory signals.

6.8.5.10 Fire Alarm and Supervisory Signal Initiation — Releasing Service Control Units.

6.8.5.10.1 Releasing service control units shall be connected to the protected premises fire alarm system.

6.8.5.10.2 Fire alarm and supervisory signals generated at the releasing control unit shall be annunciated at a protected premises fire alarm unit.

6.8.5.10.3 Where required, actuation of any suppression system connected to a releasing service control unit shall be annunciated at the protected premises fire alarm control unit even where the system actuation is by manual means or otherwise accomplished without actuation of the releasing service control unit.

6.8.5.10.4 If a valve is installed in the connection between a suppression system and an initiating device, the valve shall be supervised in accordance with Chapter 5.

6.8.5.10.5 In facilities that are not required to install a protected premises fire alarm system, the alarm and supervisory devices shall be connected to the releasing service control unit, and their actuation shall be annunciated at the releasing service control unit.

6.8.5.11 Trouble Signal Initiation.

6.8.5.11.1 Automatic fire suppression system alarm-initiating devices and supervisory signal-initiating devices and their circuits shall be designed and installed so that they cannot be subject to tampering, opening, or removal without initiating a signal. This provision shall include junction boxes installed outside of buildings to facilitate access to the initiating device circuit.

Exception No. 1: Covers of junction boxes inside of buildings.

Exception No. 2: Tamper resistant screws or other approved mechanical means shall be permitted for preventing access to junction boxes and device covers installed outside of buildings.

6.8.5.11.2 The integrity of each fire suppression system actuating device and its circuit shall be supervised in accordance with 4.4.7.1 and with other applicable NFPA standards.

6.8.6 Fire Alarm and Mass Notification System Notification Outputs.

6.8.6.1 Occupant Notification. Fire alarm and mass notification systems provided for evacuation or relocation of occupants shall have one or more notification appliances listed for the purpose on each floor of the building and so located such that they have the characteristics described in Chapter 7 for public mode or private mode, as required.

6.8.6.2* Notification Appliances in Exit Stair Enclosures, Exit Passageways, and Elevator Cars. Notification appliances shall not be required in exit stair enclosures, exit passageways, and elevator cars in accordance with 6.8.6.2.1 through 6.8.6.2.4.

6.8.6.2.1 Visible signals shall not be required in exit stair enclosures and exit passageways.

6.8.6.2.2 Visible signals shall not be required in elevator cars.

6.8.6.2.3 The evacuation signal shall not be required to operate in exit stair enclosures and exit passageways.

6.8.6.2.4 The evacuation signal shall not be required to operate in elevator cars.

6.8.6.3 Notification Zones.

6.8.6.3.1 Notification zones shall be consistent with the emergency response or evacuation plan for the protected premises.

6.8.6.3.2 The boundaries of notification zones shall be coincident with building outer walls, building fire or smoke compartment boundaries, floor separations, or other fire safety subdivisions.

6.8.6.4 Circuits for Addressable Notification Appliances.

6.8.6.4.1 Circuit configuration for addressable notification appliances shall comply with the applicable performance requirements for notification zones.

6.8.6.4.2 In protected premises with more than one notification zone, a single open, short-circuit, or ground on the system installation conductors shall not affect operation of more than one notification zone.

6.8.6.4.3 Riser conductors installed in accordance with 6.9.10.4.2 that are monitored for integrity shall not be required to operate in accordance with 6.8.6.4.2.

6.8.6.5 Distinctive Evacuation Signal.

6.8.6.5.1* To meet the requirements of 4.4.3.6, the fire alarm audible signal pattern used to notify building occupants of the need to evacuate (leave the building) shall be in accordance with ANSI S3.41, *American National Standard Audible Emergency Evacuation Signal.*

Exception: Where approved by the authority having jurisdiction, use of the existing consistent evacuation signaling scheme shall be permitted.

--`,,```,,,,````-`-`,,`,,`,`,,`---

Copyright National Fire Protection Association
Provided by IHS under license with NFPA
No reproduction or networking permitted without license from IHS
Not for Resale

6.8.6.5.2 The use of the American National Standard evacuation signal shall be restricted to situations where it is desired that all occupants hearing the signal evacuate the building immediately. It shall not be used where, with the approval of the authority having jurisdiction, the planned action during a fire emergency is not evacuation, but rather is the relocation of occupants or their protection in place as directed by the building fire protection plan or as directed by fire-fighting personnel.

6.8.6.5.3* The American National Standard evacuation signal shall be synchronized within a notification zone.

6.9* Emergency Voice/Alarm Communications.

6.9.1* Emergency Voice/Alarm Communications Requirements. Section 6.9 shall be used in the design and application of emergency voice/alarm communications.

6.9.2 Automatic Response. The emergency voice/alarm communications system shall be used to provide an automatic response to the receipt of a signal indicative of a fire alarm or other emergency.

6.9.2.1 If the monitoring location is constantly attended by trained operators, and operator acknowledgment of receipt of a fire alarm or other emergency signal is received within 30 seconds, automatic response shall not be required.

6.9.2.2 If acceptable to the authority having jurisdiction, the system shall permit the application of an automatic evacuation signal to one or more evacuation signaling zones and, at the same time, shall permit manual voice paging to the other evacuation signaling zones selectively or in any combination.

6.9.3 Voice Evacuation Messages.

6.9.3.1 In response to an initiating signal indicative of a fire emergency, the system shall be permitted to transmit a voice message.

6.9.3.2 Evacuation messages shall be preceded and followed by a minimum of two cycles of the emergency evacuation signal specified in 6.8.6.5.

6.9.4 Positive Alarm Sequence. Emergency voice/alarm communications systems shall be permitted to use positive alarm sequence complying with 6.8.1.3 if approved by the authority having jurisdiction.

6.9.5 Tones. The tone preceding any message shall be permitted to be a part of the voice message or to be transmitted automatically from a separate tone generator.

6.9.6 Controls.

6.9.6.1* Controls for the emergency voice/alarm communication system shall be at a location approved by the authority having jurisdiction.

6.9.6.2 Controls shall be located or secured to allow access by only trained and authorized personnel.

6.9.6.3 Operating controls shall be clearly identified.

6.9.6.4 If there are multiple emergency voice/alarm communications control locations, only one shall be in control at any given time.

6.9.6.5 The location having control of the system shall be identified by a visible indication at that location.

6.9.6.6 Manual controls shall be arranged to provide visible indication of the on–off status for their associated evacuation signaling zone.

6.9.6.7 If live voice instructions are provided, they shall override previously initiated signals to the selected notification zone(s) and shall have priority over any subsequent automatically initiated signals to the selected zone(s).

6.9.7* Speakers. Speakers and their enclosures shall be installed in accordance with Chapter 7.

6.9.8 Monitoring Integrity. Speaker amplifiers and tone-generating equipment shall be monitored for integrity in accordance with 4.4.7.2.

6.9.9 Secondary Power. The secondary (standby) power supply shall be provided in accordance with 4.4.1.5, 4.4.1.6.1, and 4.4.1.6.2.

6.9.10* Relocation and Partial Evacuation. The requirements of 6.9.10 shall apply only to systems used for relocation or partial evacuation.

6.9.10.1 Systems shall be provided with manual voice transmission capabilities selectively to one or more zones or on an all-call basis.

6.9.10.2 Where the system is used to transmit relocation instructions or other non-evacuation messages, a continuous alert tone of 3-second to 10-second duration followed by a message (or messages where multi-channel capability is provided) shall be automatic, and the sequence shall be repeated at least three times to direct occupants in the evacuation signaling zone where the alarm initiation originated and other evacuation signaling zones in accordance with the building's fire evacuation plan.

6.9.10.3 Where provided, speakers in each enclosed stairway shall be connected to a separate notification zone for manual paging only.

6.9.10.4 The requirements of 6.9.10.4 shall apply to both audible (tone and voice) and visible notification appliance circuits.

6.9.10.4.1* Fire alarm systems used for partial evacuation and relocation shall be designed and installed such that attack by fire within an evacuation signaling zone shall not impair control and operation of the notification appliances outside the evacuation signaling zone. Performance features provided to ensure survivability shall be described and technical justification provided in the documentation submitted to the authority having jurisdiction with the evaluation required in 6.4.3.1.

6.9.10.4.2 All circuits necessary for the operation of the notification appliances shall be protected until they enter the evacuation signaling zone that they serve. Any of the following methods shall be considered acceptable as meeting the requirements of this subsection:

(1) A 2-hour fire rated circuit integrity (CI) cable
(2) A 2-hour fire rated cable system (electrical circuit protective system)
(3) A 2-hour fire rated enclosure
(4)* Performance alternatives approved by the authority having jurisdiction
(5) Buildings fully protected by an automatic sprinkler system installed in accordance with NFPA 13, *Standard for the Installation of Sprinkler Systems*, and with the interconnecting wiring or cables used for the operation of notification appliances installed in metal raceways and in accordance with Article 760 of NFPA 70

Copyright National Fire Protection Association
Provided by IHS under license with NFPA
No reproduction or networking permitted without license from IHS
Not for Resale

6.9.10.4.3 Where the separation of emergency voice/alarm control equipment locations results in the portions of the system controlled by one location being dependent upon the control equipment in other locations, the circuits between the dependent controls shall be protected against attack by fire using one of the following methods:

(1) A 2-hour fire rated circuit integrity (CI) cable
(2) A 2-hour fire rated cable system (electrical circuit protective system)
(3) Routing the cable through a 2-hour rated enclosure
(4) Performance alternatives approved by the authority having jurisdiction
(5) Buildings fully protected by an automatic sprinkler system installed in accordance with NFPA 13, *Standard for the Installation of Sprinkler Systems*, and with the interconnecting wiring or cables between the emergency voice/alarm communication control equipment locations installed in metal raceways and in accordance with Article 760 of NFPA 70

6.9.10.4.4 Protection of circuits between redundant control equipment locations that are not mutually dependent shall not be required.

6.9.11 Evacuation Signal Zoning.

6.9.11.1* Undivided fire or smoke areas shall not be divided into multiple evacuation signaling zones.

6.9.11.2 If multiple notification appliance circuits are provided within a single evacuation signaling zone, all of the notification appliances within the zone shall be arranged to activate or deactivate simultaneously, either automatically or by actuation of a common, manual control.

Exception: Where the different notification appliance circuits within an evacuation signaling zone perform separate functions (for example, presignal and general alarm signals, and predischarge and discharge signals).

6.10 Two-Way Communication Service.

6.10.1 Two-Way Telephone Communication Service.

6.10.1.1 Two-way telephone communications equipment shall be listed for two-way telephone communications service and installed in accordance with Section 6.10.1.

6.10.1.2 Two-way telephone communications service, if provided, shall be for use by the fire service and collocated with the emergency voice alarm communications equipment.

6.10.1.3 Monitoring of the integrity of two-way telephone communications circuits shall be in accordance with 4.4.7.2.

6.10.1.4 Additional uses, if specifically permitted by the authority having jurisdiction, shall be permitted to include signaling and communications for a building fire warden organization, signaling and communications for reporting a fire and other emergencies (e.g., voice call box service, signaling, and communications for guard's tour service), and other uses.

6.10.1.5 Variation of equipment and system operation provided to facilitate additional use of the two-way telephone communications service shall not adversely affect performance when used by the fire service.

6.10.1.6* Two-way telephone communications service shall be capable of permitting the simultaneous operation of any five telephone stations in a common talk mode.

6.10.1.7 A notification signal at the control equipment, distinctive from any other alarm, supervisory, or trouble signal, shall indicate the off-hook condition of a calling telephone circuit. If a selective talk telephone communications service is supplied, a distinctive visible indicator shall be furnished for each selectable circuit so that all circuits with telephones off-hook are continuously and visibly indicated.

6.10.1.8 A means for silencing the audible call-in signal sounding appliance shall be permitted, provided it is key-operated, in a locked cabinet, or provided with protection to prevent use by unauthorized persons. The means shall operate a visible indicator and sound a trouble signal whenever the means is in the silence position and no telephone circuits are in an off-hook condition.

6.10.1.9 If a selective talk system is used, such a switch shall be permitted, provided subsequent telephone circuits going off-hook operate the distinctive off-hook audible signal sounding appliance.

6.10.1.10 As a minimum (for fire service use only), two-way telephone systems shall be common talk (i.e., a conference or party line circuit), providing at least one telephone station or jack per floor and at least one telephone station or jack per exit stairway.

6.10.1.11 In buildings equipped with a fire pump(s), a telephone station or jack shall be provided in each fire pump room.

6.10.1.12 If the two-way telephone system is intended to be used by fire wardens in addition to the fire service, the minimum requirement shall be a selective talk system (where phones are selected from the control location).

6.10.1.13 Systems intended for fire warden use shall provide telephone stations or jacks as required for fire service use, and additional telephone stations or jacks as necessary to provide at least one telephone station or jack in each notification zone. Telephone circuits shall be selectable from the control location either individually or, if approved by the authority having jurisdiction, by floor or stairwell.

6.10.1.14 If the control equipment provided does not indicate the location of the caller (common talk systems), each telephone station or telephone jack shall be clearly and permanently labeled to allow the caller to identify his or her location to the control center by voice.

6.10.1.15 If telephone jacks are provided, two or more portable handsets, as determined by the authority having jurisdiction, shall be stored at each control center for use by emergency responders.

6.10.1.16* All circuits necessary for the operation of two-way telephone communication systems shall be installed using one of the following methods:

(1) A 2-hour fire rated circuit integrity (CI) cable
(2) A 2-hour fire rated cable system (electrical circuit protective system)
(3) A 2-hour fire rated enclosure
(4) Performance alternatives approved by the authority having jurisdiction
(5) Buildings fully protected by an automatic sprinkler system installed in accordance with NFPA 13, *Standard for the Installation of Sprinkler Systems*, with the wiring or cables installed in metal raceways and in accordance with Article 760 of NFPA 70

Copyright National Fire Protection Association
Provided by IHS under license with NFPA
No reproduction or networking permitted without license from IHS
Not for Resale

6.10.2* Two-Way In-Building Radio Communications Enhancement Systems.

6.10.2.1 Installation of two-way in-building radio communications enhancement systems shall be permitted.

6.10.2.2 Two-way in-building radio communications enhancement systems shall be permitted to be monitored by the building fire alarm system.

6.11 Signal Annunciation.

6.11.1 Protected premises fire alarm systems shall be arranged to annunciate alarm, supervisory, and trouble signals in accordance with 4.4.6.

6.11.2* If a remote alarm indicator is provided for an automatic fire detector in a concealed location, the location of the detector and the area protected by the detector shall be prominently indicated at the remote alarm indicator by a permanently attached placard or by other approved means.

6.12 Suppression System Actuation.

6.12.1 Fire alarm control units used for automatic or manual activation of a fire suppression system shall be listed for releasing service.

6.12.2 Releasing devices for suppression systems shall be listed for use with releasing service control units.

6.12.3 Each releasing device (e.g., solenoid, relay) shall be monitored for integrity (supervised) in accordance with applicable NFPA standards.

6.12.4 The installation wiring shall be monitored for integrity in accordance with the requirements of 4.4.7.

6.12.5 Fire alarm systems used for fire suppression–releasing service shall be provided with a disconnect switch to allow the system to be tested without actuating the fire suppression systems.

6.12.5.1 Operation of a disconnect switch or a disable function shall cause a supervisory signal at the fire alarm control unit.

6.12.5.2 The disconnect shall be a physical switch and not be accomplished by using software.

6.12.6 Sequence of operation shall be consistent with the applicable suppression system standards.

6.12.7* Each space protected by an automatic fire suppression system actuated by the fire alarm system shall contain one or more automatic fire detectors installed in accordance with Chapter 5.

6.12.8 Suppression systems or groups of systems shall be controlled by a single control unit that monitors the associated initiating device(s), actuates the associated releasing device(s), and controls the associated agent release notification appliances. If the releasing control unit is located in a protected premises having a separate fire alarm system, it shall be monitored for alarm, supervisory, and trouble signals, but shall not be dependent on or affected by the operation or failure of the protected premises fire alarm system.

Exception: If the configuration of multiple control units is listed for releasing device service, and if a trouble condition or manual disconnect on either control unit causes a trouble or supervisory signal, the initiating devices on one control unit shall be permitted to actuate releasing devices on another control unit.

6.12.9 Fire alarm systems performing suppression system releasing functions shall be installed in such a manner that they are effectively protected from damage caused by activation of the suppression system(s) they control.

6.13 Off-Premises Signals.

6.13.1 Systems requiring transmission of signals to continuously attended locations providing supervising station service (e.g., central station, proprietary supervising station, remote supervising station) shall also comply with the applicable requirements of Chapter 8.

6.13.2 Relays or modules providing transmission of trouble signals to a supervising station shall be arranged to provide fail-safe operation.

6.13.3 Means provided to transmit trouble signals to supervising stations shall be arranged so as to transmit a trouble signal to the supervising station for any trouble condition received at the protected premises control unit, including loss of primary or secondary power.

6.14 Guard's Tour Supervisory Service.

6.14.1 Guard's tour reporting stations shall be listed for the application.

6.14.2 The number of guard's tour reporting stations, their locations, and the route to be followed by the guard for operating the stations shall be approved for the particular installation in accordance with NFPA 601, *Standard for Security Services in Fire Loss Prevention.*

6.14.3 A permanent record indicating every time each signal-transmitting station is operated shall be made at a protected premises fire alarm control unit.

6.14.4 Where intermediate stations that do not transmit a signal are employed in conjunction with signal-transmitting stations, distinctive signals shall be transmitted at the beginning and end of each tour of a guard, and a signal-transmitting station shall be provided at intervals not exceeding 10 stations.

6.14.5 Intermediate stations that do not transmit a signal shall be capable of operation only in a fixed sequence.

6.15 Suppressed (Exception Reporting) Signal System.

6.15.1 The suppressed signal system shall comply with the provisions of 6.14.2.

6.15.2 The system shall transmit a start signal to the signal-receiving location and shall be initiated by the guard at the start of continuous tour rounds.

6.15.3 The system shall automatically transmit a delinquency signal within 15 minutes after the predetermined actuation time if the guard fails to actuate a tour station as scheduled.

6.15.4 A finish signal shall be transmitted within a predetermined interval after the guard's completion of each tour of the premises.

6.15.5 For periods of over 24 hours during which tours are continuously conducted, a start signal shall be transmitted at least every 24 hours.

6.15.6 The start, delinquency, and finish signals shall be recorded at the signal-receiving location.

6.16 Protected Premises Fire Safety Functions.

6.16.1 Application. The provisions of Section 6.16 shall cover the minimum requirements for the interconnection of protected

Copyright National Fire Protection Association
Provided by IHS under license with NFPA
No reproduction or networking permitted without license from IHS
Not for Resale

premises fire safety functions (e.g., fan control, door control) to the fire alarm system in accordance with 6.8.1.1 and 6.16.2.1.

6.16.2 General.

6.16.2.1 Fire safety functions shall be permitted to be performed automatically. The performance of automatic fire safety functions shall not interfere with power for lighting or for operating elevators. The performance of automatic fire safety control functions shall not preclude the combination of fire alarm services with other services requiring monitoring of operations.

6.16.2.2* A listed relay or other listed appliance connected to the fire alarm system used to initiate control of protected premises fire safety functions shall be located within 1 m (3 ft) of the controlled circuit or appliance.

6.16.2.3 The relay or other appliance shall function within the voltage and current limitations of the fire alarm control unit.

6.16.2.4 The installation wiring between the fire alarm control unit and the relay or other appliance shall be monitored for integrity.

Exception: Relays or appliances that operate on loss of power shall be considered self-monitoring for integrity.

6.16.2.5 Fire safety functions shall not interfere with other operations of the fire alarm system.

6.16.2.6 The method(s) of interconnection between the fire alarm system and controlled electrical and mechanical systems shall be monitored for integrity in accordance with 4.4.7; shall comply with the applicable provisions of NFPA 70, *National Electrical Code*, Article 760; and shall be achieved by one of the following recognized means:

(1) Electrical contacts listed for the connected load
(2) Data communications over signaling line circuit(s) dedicated to the fire alarm or shared with other premises operating systems
(3) Other listed methods

6.16.2.7 If a fire alarm system is a component of a life safety network and it communicates data to other systems providing life safety functions or it receives data from such systems, the following shall apply:

(1) The path used for communicating data shall be monitored for integrity. This shall include monitoring the physical communication media and the ability to maintain intelligible communications.
(2) Data received from the network shall not affect the operation of the fire alarm system in any way other than to display the status of life safety network components.
(3) Where non-fire alarm systems are interconnected to the fire alarm system using a network or other digital communication technique, a signal (e.g., heartbeat, poll, ping, query) shall be generated between the fire alarm system and the non-fire alarm system. Failure of the fire alarm system to receive confirmation of the transmission shall cause a trouble signal to indicate within 200 seconds.

6.16.2.8 The operation of all fire safety functions shall be verified by an operational test at the time of system acceptance.

6.16.3 Elevator Recall for Fire Fighters' Service.

6.16.3.1 System-type smoke detectors, or other automatic fire detection as permitted by 6.16.3.7, located in elevator lobbies, elevator hoistways, and elevator machine rooms including machine space, control room, and control space used to initiate fire fighters' service recall, shall be connected to the building fire alarm system.

6.16.3.2* In facilities without a building fire alarm system, these smoke detectors, or other automatic fire detection as permitted by 6.16.3.7, shall be connected to a dedicated function fire alarm control unit that shall be designated as "elevator recall control and supervisory control unit," permanently identified on the dedicated function fire alarm control unit and on the record drawings.

6.16.3.3 Unless otherwise required by the authority having jurisdiction, only the elevator lobby, elevator hoistway, and the elevator machine room smoke detectors, or other automatic fire detection as permitted by 6.16.3.7, shall be used to recall elevators for fire fighters' service.

6.16.3.4 Each elevator lobby, elevator hoistway, and elevator machine room smoke detector, or other automatic fire detection as permitted by 6.16.3.7, shall be capable of initiating elevator recall when all other devices on the same initiating device circuit have been manually or automatically placed in the alarm condition.

6.16.3.5* A lobby smoke detector shall be located on the ceiling within 6.4 m (21 ft) of the centerline of each elevator door within the elevator bank under control of the detector.

Exception: For lobby ceiling configurations exceeding 4.6 m (15 ft) in height or that are other than flat and smooth, detector locations shall be determined in accordance with Chapter 5.

6.16.3.6 Smoke detectors shall not be installed in unsprinklered elevator hoistways unless they are installed to activate the elevator hoistway smoke relief equipment.

6.16.3.7* If ambient conditions prohibit installation of automatic smoke detection, other automatic fire detection shall be permitted.

6.16.3.8 When actuated, any detector that has initiated firefighters' recall shall also be annunciated at the building fire alarm control unit, or other fire alarm control unit as described in 6.16.3.2, and required remote annunciators.

6.16.3.9 Actuation from elevator hoistway and elevator machine room smoke detectors or other automatic fire detection as permitted by 6.16.3.7 shall cause separate and distinct visible annunciation at the building fire alarm control unit or the fire alarm control unit described in 6.16.3.2 and required annunciators to alert fire fighters and other emergency personnel that the elevators are no longer safe to use.

6.16.3.10 Where approved by the authority having jurisdiction, the detectors used to initiate elevator recall shall be permitted to initiate a supervisory signal in lieu of an alarm signal.

6.16.3.11 Where lobby detectors are used for other than initiating elevator recall, the signal initiated by the detector shall also initiate an alarm signal.

6.16.3.12* Separate outputs from the fire alarm systems to the elevator controller(s) shall be provided to implement elevator Phase I Emergency Recall Operation in accordance with Section 2.27 of ASME A17.1, *Safety Code for Elevators and Escalators*, as required in 6.16.3.12.1 through 6.16.3.12.3.

6.16.3.12.1 Designated Level Recall. For each elevator or group of elevators, an output shall be provided to signal elevator recall to the designated level in response to the following:

Copyright National Fire Protection Association
Provided by IHS under license with NFPA
No reproduction or networking permitted without license from IHS
Not for Resale

(1) Activation of smoke detectors, or other automatic fire detection as permitted by 6.16.3.7, located at any elevator lobby served by the elevator(s) other than the lobby at the designated level
(2) Activation of smoke detectors, or other automatic fire detection as permitted by 6.16.3.7, located at any elevator machine room serving the elevator(s) except where the machine room is located at the designated level
(3) Activation of smoke detectors, or other automatic fire detection as permitted by 6.16.3.7, located in the elevator hoistway serving the elevator when sprinklers are located in the hoistway unless otherwise specified in 6.16.3.12.2(3)

6.16.3.12.2 Alternate Level Recall. For each elevator or group of elevators, an output shall be provided to signal elevator recall to the alternate level in response to the following:

(1) Activation of smoke detectors, or the automatic fire detection as permitted by 6.16.3.7, located at the designated level lobby served by the elevator(s)
(2) Activation of smoke detectors, or other automatic fire detection as permitted by 6.16.3.7, located in the elevator machine room serving the elevator(s) if the machine room is located at the designated level
(3)*Activation of the initiating devices identified in 6.16.3.12.1(3) if they are installed at or below the lowest level of recall in the elevator hoistway and the alternate level is located above the designated level

6.16.3.12.3* Visual Warning. For each elevator or group of elevators, an output(s) shall be provided for the elevator visual warning signal in response to the following:

(1) Activation of the elevator machine room initiating devices identified in 6.16.3.12.1(2) or 6.16.3.12.2(2)
(2) Activation of the elevator hoistway initiating devices identified in 6.16.3.12.1(3) or 6.16.3.12.2(3)

6.16.4 Elevator Shutdown.

6.16.4.1* Where heat detectors are used to shut down elevator power prior to sprinkler operation, the detector shall have both a lower temperature rating and a higher sensitivity as compared to the sprinkler.

6.16.4.2 If heat detectors are used to shut down elevator power prior to sprinkler operation, they shall be placed within 610 mm (2 ft) of each sprinkler head and be installed in accordance with the requirements of Chapter 5. Alternatively, engineering methods, such as specified in Annex B, shall be permitted to be used to select and place heat detectors to ensure response prior to any sprinkler head operation under a variety of fire growth rate scenarios.

6.16.4.3* If pressure or waterflow switches are used to shut down elevator power immediately upon or prior to the discharge of water from sprinklers, the use of devices with time-delay switches or time-delay capability shall not be permitted.

6.16.4.4* Control circuits to shut down elevator power shall be monitored for presence of operating voltage. Loss of voltage to the control circuit for the disconnecting means shall cause a supervisory signal to be indicated at the control unit and required remote annunciators.

6.16.4.5 The initiating devices described in 6.16.4.2 and 6.16.4.3 shall be monitored for integrity by the fire alarm control unit required in 6.16.3.1 and 6.16.3.2.

6.16.5 HVAC Systems.

6.16.5.1 The provisions of 6.16.5 shall apply to the basic method by which a fire alarm system interfaces with the HVAC systems.

6.16.5.2* If connected to the fire alarm system serving the protected premises, all detection devices used to cause the operation of HVAC systems smoke dampers, fire dampers, fan control, smoke doors, and fire doors shall be monitored for integrity in accordance with 4.4.7.

6.16.5.3* Connections between fire alarm systems and the HVAC system for the purpose of monitoring and control shall operate and be monitored in accordance with applicable NFPA standards. Smoke detectors mounted in the air ducts of HVAC systems shall initiate either an alarm signal at the protected premises or a supervisory signal at a constantly attended location or supervising station.

6.16.5.4 If the fire alarm control unit actuates the HVAC system for the purpose of smoke control, the automatic alarm-initiating zones shall be coordinated with the smoke-control zones they actuate.

6.16.5.5 Where interconnected as a combination system, a Firefighter's Smoke Control Station (FSCS) shall be provided to perform manual control over the automatic operation of the system's smoke control strategy.

6.16.5.6 Where interconnected as a combination system, the smoke control system programming shall be designed such that normal HVAC operation or changes do not prevent the intended performance of the smoke control strategy.

6.16.6 Door Release Service.

6.16.6.1 The provisions of 6.16.6 shall apply to the methods of connection of door hold-open release devices and to integral door hold-open release, closer, and smoke detection devices.

6.16.6.2 All detection devices used for door hold-open release service shall be monitored for integrity in accordance with 4.4.7.

Exception: Smoke detectors used only for door release and not for open area protection.

6.16.6.3 All door hold-open release and integral door release and closure devices used for release service shall be monitored for integrity in accordance with 6.16.2.

6.16.6.4 Magnetic door holders that allow doors to close upon loss of operating power shall not be required to have a secondary power source.

6.16.7 Door Unlocking Devices.

6.16.7.1 Any device or system intended to actuate the locking or unlocking of exits shall be connected to the fire alarm system serving the protected premises.

6.16.7.2 All exits connected in accordance with 6.16.7.1 shall unlock upon receipt of any fire alarm signal by means of the fire alarm system serving the protected premises.

Exception: Where otherwise required or permitted by the authority having jurisdiction or other codes.

6.16.7.3* For all exits connected in accordance with 6.16.7.1 and where batteries are used in accordance with 4.4.1.5.1(1) as the secondary power supply, the batteries shall not be utilized to maintain these doors in the locked condition unless

Copyright National Fire Protection Association
Provided by IHS under license with NFPA
No reproduction or networking permitted without license from IHS
Not for Resale

the fire alarm control unit is arranged with circuitry and sufficient secondary power to ensure the exits will unlock within 10 minutes of loss of primary power.

6.16.7.4 Locks powered by independent power supplies dedicated to lock power and access control functions and which unlock upon loss of power shall not be required to comply with 6.16.7.3.

6.16.7.5 If exit doors are unlocked by the fire alarm system, the unlocking function shall occur prior to or concurrent with activation of any public-mode notification appliances in the area(s) served by the normally locked exits.

6.16.7.6 All doors that are required to be unlocked by the fire alarm system in accordance with 6.16.7.1 through 6.16.7.5 shall remain unlocked until the fire alarm condition is manually reset.

6.16.8* Exit Marking Audible Notification Systems.

6.16.8.1 Where required, exit marking audible notification appliances shall be activated by the building fire alarm system.

6.16.8.2 Exit marking systems shall meet the requirements of Chapter 7.

6.17* Special Requirements for Low-Power Radio (Wireless) Systems.

6.17.1* Listing Requirements. Compliance with Section 6.17 shall require the use of low-power radio equipment specifically listed for the purpose.

6.17.2 Power Supplies. A primary battery (dry cell) shall be permitted to be used as the sole power source of a low-power radio transmitter where all of the following conditions are met:

(1) Each transmitter shall serve only one device and shall be individually identified at the receiver/fire alarm control unit.
(2) The battery shall be capable of operating the low-power radio transmitter for not less than 1 year before the battery depletion threshold is reached.
(3) A battery depletion signal shall be transmitted before the battery has been depleted to a level below that required to support alarm transmission after 7 additional days of nonalarm operation. This signal shall be distinctive from alarm, supervisory, tamper, and trouble signals; shall visibly identify the affected low-power radio transmitter; and, when silenced, shall automatically re-sound at least once every 4 hours.
(4) Catastrophic (open or short) battery failure shall cause a trouble signal identifying the affected low-power radio transmitter at its receiver/fire alarm control unit. When silenced, the trouble signal shall automatically re-sound at least once every 4 hours.
(5) Any mode of failure of a primary battery in a low-power radio transmitter shall not affect any other low-power radio transmitter.

6.17.3 Alarm Signals.

6.17.3.1* When actuated, each low-power radio transmitter shall automatically transmit an alarm signal.

6.17.3.2 Each low-power radio transmitter shall automatically repeat alarm transmission at intervals not exceeding 60 seconds until the initiating device is returned to its nonalarm condition.

6.17.3.3 Fire alarm signals shall have priority over all other signals.

6.17.3.4 The maximum allowable response delay from activation of an initiating device to receipt and display by the receiver/fire alarm control unit shall be 10 seconds.

6.17.3.5 An alarm signal from a low-power radio transmitter shall latch at its receiver/fire alarm control unit until manually reset and shall identify the particular initiating device in alarm.

6.17.4 Monitoring for Integrity.

6.17.4.1 The low-power radio transmitter shall be specifically listed as using a transmission method that is highly resistant to misinterpretation of simultaneous transmissions and to interference (e.g., impulse noise and adjacent channel interference).

6.17.4.2 The occurrence of any single fault that disables transmission between any low-power radio transmitter and the receiver/fire alarm control unit shall cause a latching trouble signal within 200 seconds.

Exception: Where Federal Communications Commission (FCC) regulations prevent meeting the 200-second requirement, the time period for a low-power radio transmitter with only a single, connected alarm-initiating device shall be permitted to be increased to four times the minimum time interval permitted for a 1-second transmission up to the following:

(1) Four hours maximum for a transmitter serving a single initiating device
(2) Four hours maximum for a retransmission device (repeater) where disabling of the repeater or its transmission does not prevent the receipt of signals at the receiver/fire alarm control unit from any initiating device transmitter

6.17.4.3 A single fault on the signaling channel shall not cause an alarm signal.

6.17.4.4 The periodic transmission required to comply with 6.17.4.2 from a low-power radio transmitter shall ensure successful alarm transmission capability.

6.17.4.5 Removal of a low-power radio transmitter from its installed location shall cause immediate transmission of a distinctive supervisory signal that indicates its removal and individually identifies the affected device.

Exception: This requirement shall not apply to dwelling unit fire warning systems.

6.17.4.6 Reception of any unwanted (interfering) transmission by a retransmission device (repeater) or by the main receiver/control unit, for a continuous period of 20 seconds or more, shall cause an audible and visible trouble indication at the main receiver/control unit. This indication shall identify the specific trouble condition as an interfering signal.

6.17.5 Output Signals from Receiver/Control. When the receiver/control is used to actuate remote appliances, such as notification appliances and relays, by wireless means, the remote appliances shall meet the following requirements:

(1) Power supplies shall comply with Chapter 4 or the requirements of 6.17.2.
(2) All supervision requirements of Chapter 4, Chapter 6, or 6.17.4 shall apply.
(3) The maximum allowable response delay from activation of an initiating device to activation of required alarm functions shall be 10 seconds.

Copyright National Fire Protection Association
Provided by IHS under license with NFPA
No reproduction or networking permitted without license from IHS
Not for Resale

(4) Each receiver/control shall automatically repeat alarm transmission at intervals not exceeding 60 seconds or until confirmation that the output appliance has received the alarm signal.
(5) The appliances shall continue to operate (latch-in) until manually reset at the receiver/control.

6.18 Mass Notification Systems. See Annex E.

Chapter 7 Notification Appliances for Fire Alarm Systems

7.1* Application.

7.1.1 The requirements of this chapter shall apply where required by the authority having jurisdiction or other governing codes or standards.

7.1.2 The requirements of this chapter shall address the reception of a notification signal and not the signal's information content.

7.1.3 The performance, location, and mounting of notification appliances used to initiate or direct evacuation or relocation of the occupants, or for providing information to occupants or staff, shall comply with this chapter.

7.1.4 The performance, location, and mounting of annunciators, displays, and printers used to display or record information for use by occupants, staff, responding emergency personnel, or supervising station personnel shall comply with this chapter.

7.1.5* The requirements of this chapter shall apply to the areas, spaces, or system functions where required by other parts of this Code, the authority having jurisdiction, or other codes and standards requiring compliance with this chapter.

7.1.6 The requirements of Chapter 4 and Chapter 6 shall apply to the interconnection of notification appliances, the control configurations, the power supplies, and the use of the information provided by notification appliances.

7.1.7 Notification appliances shall be permitted to be used within buildings or outdoors and to target the general building, area, or space, or only specific parts of a building, area, or space designated in specific zones and sub-zones.

7.2 Purpose. Notification appliances shall provide stimuli for initiating emergency action and provide information to users, emergency response personnel, and occupants.

7.3 General.

7.3.1 Listing. All notification appliances installed in conformity with Chapter 7 shall be listed for the purpose for which they are used.

7.3.2 Nameplates.

7.3.2.1 Notification appliances shall include on their nameplates reference to electrical requirements and rated audible or visible performance, or both, as defined by the listing authority.

7.3.2.2 Audible appliances shall include on their nameplates reference to their parameters or reference to installation documents (supplied with the appliance) that include the parameters in accordance with 7.4.2 or 7.4.3.

7.3.2.3 Visible appliances shall include on their nameplates reference to their parameters or reference to installation documents (supplied with the appliance) that include the parameters in accordance with 7.5.2.1 or Section 7.6.

7.3.3 Physical Construction.

7.3.3.1 Appliances intended for use in special environments, such as outdoors versus indoors, high or low temperatures, high humidity, dusty conditions, and hazardous locations, or where subject to tampering, shall be listed for the intended application.

7.3.3.2* Notification appliances used for signaling other than fire shall not have the word FIRE, or any fire symbol, in any form (i.e., stamped, imprinted, etc.) on the appliance visible to the public. Notification appliances with multiple visible elements shall be permitted to have fire markings only on those visible elements used for fire signaling.

7.3.4* Mechanical Protection.

7.3.4.1 Appliances subject to mechanical damage shall be suitably protected.

7.3.4.2 If guards, covers, or lenses are employed, they shall be listed for use with the appliance.

7.3.4.3 The effect of guards, covers, or lenses on the appliance's field performance shall be in accordance with the listing requirements.

7.3.5 Mounting.

7.3.5.1 Appliances shall be supported independently of their attachments to the circuit conductors.

7.3.5.2 Appliances shall be mounted in accordance with the manufacturer's published instructions.

7.3.6* Connections. Terminals, leads, or addressable communication, which provide for monitoring the integrity of the notification appliance connections, shall be provided.

7.4 Audible Characteristics.

7.4.1 General Requirements.

7.4.1.1* An average ambient sound level greater than 105 dBA shall require the use of a visible notification appliance(s) in accordance with Section 7.5 where the application is public mode or Section 7.6 where the application is private mode.

7.4.1.2* The total sound pressure level produced by combining the ambient sound pressure level with all audible notification appliances operating shall not exceed 110 dBA at the minimum hearing distance.

7.4.1.3* Sound from normal or permanent sources, having a duration greater than 60 seconds, shall be included when measuring maximum ambient sound level. Sound from temporary or abnormal sources shall not be required to be included when measuring maximum ambient sound level.

7.4.1.4* Where required, voice communications systems shall be capable of the reproduction of prerecorded, synthesized, or live (e.g., microphone, telephone handset, and radio) messages with voice intelligibility.

7.4.1.5 Audible notification appliances for alert and evacuation signal tones shall meet the requirements of 7.4.2 (Public Mode Audible Requirements), 7.4.3 (Private Mode Audible Requirements), 7.4.4 (Sleeping Area Requirements), or 7.4.5 (Narrow Band Tone Signaling for Exceeding Masked Thresholds), as applicable.

Copyright National Fire Protection Association
Provided by IHS under license with NFPA
No reproduction or networking permitted without license from IHS
Not for Resale

7.4.1.6* Voice messages shall not be required to meet the audibility requirements of 7.4.2 (Public Mode Audible Requirements), 7.4.3 (Private Mode Audible Requirements), 7.4.4 (Sleeping Area Requirements), or 7.4.5 (Narrow Band Tone Signaling for Exceeding Masked Thresholds), but shall meet the intelligibility requirements of 7.4.1.4 where voice intelligibility is required.

7.4.1.7 Audible notification appliances used for exit marking shall not be required to meet the audibility requirements of 7.4.2 (Public Mode Audible Requirements), 7.4.3 (Private Mode Audible Requirements), 7.4.4 (Sleeping Area Requirements), or 7.4.5 (Narrow Band Tone Signaling for Exceeding Masked Thresholds), except as required by 7.4.6 (Exit Marking Audible Appliance Requirements).

7.4.2* Public Mode Audible Requirements.

7.4.2.1* To ensure that audible public mode signals are clearly heard, unless otherwise permitted by 7.4.2.2 through 7.4.2.5, they shall have a sound level at least 15 dB above the average ambient sound level or 5 dB above the maximum sound level having a duration of at least 60 seconds, whichever is greater, measured 1.5 m (5 ft) above the floor in the area required to be served by the system using the A-weighted scale (dBA).

7.4.2.2 Where approved by the authority having jurisdiction or other governing codes or standards, the requirements for audible signaling shall be permitted to be reduced or eliminated when visible signaling is provided in accordance with Section 7.5.

7.4.2.3 Audible alarm notification appliances installed in elevator cars shall be permitted to use the audibility criteria for private mode appliances detailed in 7.4.3.1.

7.4.2.4 If approved by the authority having jurisdiction, audible alarm notification appliances installed in restrooms shall be permitted to use the audibility criteria for private mode appliances detailed in 7.4.3.1.

7.4.2.5 A fire alarm system arranged to stop or reduce ambient noise, when approved by the authority having jurisdiction, shall comply with 7.4.2.5.1 through 7.4.2.5.3.

7.4.2.5.1 A fire alarm system arranged to stop or reduce ambient noise shall produce a sound level at least 15 dB above the reduced average ambient sound level or 5 dB above the maximum sound level having a duration of at least 60 seconds after reduction of the ambient noise level, whichever is greater, measured 1.5 m (5 ft) above the floor in the area required to be served by the system using the A-weighted scale (dBA).

7.4.2.5.2 Visible notification appliances shall be installed in the affected areas in accordance with Section 7.5 or Section 7.6.

7.4.2.5.3 Relays, circuits, or interfaces necessary to stop or reduce ambient noise shall meet the requirements of Chapter 4 and Chapter 6.

7.4.3 Private Mode Audible Requirements.

7.4.3.1* To ensure that audible private mode signals are clearly heard, they shall have a sound level at least 10 dB above the average ambient sound level or 5 dB above the maximum sound level having a duration of at least 60 seconds, whichever is greater, measured 1.5 m (5 ft) above the floor in the area required to be served by the system using the A-weighted scale (dBA).

7.4.3.2* Where approved by the authority having jurisdiction or other governing codes or standards, the requirements for audible signaling shall be permitted to be reduced or eliminated when visible signaling is provided in accordance with Section 7.5.

7.4.3.3 A system arranged to stop or reduce ambient noise, when approved by the authority having jurisdiction, shall comply with 7.4.3.3.1 through 7.4.3.3.3.

7.4.3.3.1 If approved by the authority having jurisdiction, a system arranged to stop or reduce ambient noise shall be permitted to produce a sound level at least 10 dB above the reduced average ambient sound level or 5 dB above the maximum sound level having a duration of at least 60 seconds after reduction of the ambient noise level, whichever is greater, measured 1.5 m (5 ft) above the floor, using the A-weighted scale (dBA).

7.4.3.3.2 Visible notification appliances shall be installed in the affected areas in accordance with Section 7.5 or Section 7.6.

7.4.3.3.3 Relays, circuits, or interfaces necessary to stop or reduce ambient noise shall meet the requirements of Chapter 4 and Chapter 6.

7.4.4 Sleeping Area Requirements.

7.4.4.1* Where audible appliances are installed to provide signals for sleeping areas, they shall have a sound level of at least 15 dB above the average ambient sound level or 5 dB above the maximum sound level having a duration of at least 60 seconds or a sound level of at least 75 dBA, whichever is greater, measured at the pillow level in the area required to be served by the system using the A-weighted scale (dBA).

7.4.4.2 If any barrier, such as a door, curtain, or retractable partition, is located between the notification appliance and the pillow, the sound pressure level shall be measured with the barrier placed between the appliance and the pillow.

7.4.5* Narrow Band Tone Signaling for Exceeding Masked Thresholds.

7.4.5.1 Masked Threshold Allowance. Audible tone signaling shall be permitted to comply with the masked threshold requirements in this subsection in lieu of the A-weighted signaling requirements in 7.4.2 and 7.4.3.

7.4.5.2* Calculation Method. The effective masked threshold shall be calculated in accordance with ISO 7731, *Danger signals for work places — Auditory danger signals.*

7.4.5.3 Noise Data. Noise data for calculating the effective masked threshold shall be the peak value of noise lasting 60 seconds or more for each octave or one-third octave band.

7.4.5.4 Documentation. Analysis and design documentation shall be submitted to the authority having jurisdiction and shall contain the following information:

(1) Frequency data for the ambient noise, including the date, time, and location where measurements were taken for existing environments, or projected data for environments not yet constructed
(2) Frequency data of the audible notification appliance
(3) Calculations of the effective masked threshold for each set of noise data

Copyright National Fire Protection Association
Provided by IHS under license with NFPA
No reproduction or networking permitted without license from IHS
Not for Resale

(4) A statement of the sound pressure level that would be required by 7.4.2 or 7.4.3 if masked threshold signaling had not been done

7.4.5.5 Sound Pressure Level. For masked threshold signaling, the audible signal tone shall meet the requirements of either 7.4.5.5.1 or 7.4.5.5.2 but not for the reproduction of pre-recorded, synthesized, or live messages.

7.4.5.5.1 The sound pressure level of the audible tone signal shall exceed the masked threshold in one or more octave bands by at least 10 dB in the octave band under consideration.

7.4.5.5.2 The sound pressure level of the audible tone signal shall exceed the masked threshold in one or more one-third octave bands by at least 13 dB in the one-third octave band under consideration.

7.4.6 Exit Marking Audible Notification Appliance Requirements.

7.4.6.1* Exit marking audible notification appliances shall meet or exceed the frequency and sound level settings and guidelines specified in the manufacturer's documented instructions.

7.4.6.2* In addition to 7.4.6.1, as a minimum, to ensure that exit marking audible notification appliance signals are clearly heard and produce the desired directional effects for 15.24 m (50 ft) within an unobstructed egress path, they shall meet the audibility requirements of 7.4.6.1, Narrow Band Tone Signaling for Exceeding Masked Thresholds, in at least one ⅓ octave band or one octave band within the effective frequency ranges of the interaural time difference (ITD), interaural level or intensity difference (ILD or IID), and anatomical transfer function or head-related transfer function (ATF or HRTF) localization cues. The signal shall penetrate both the ambient noise and the fire alarm signal.

7.4.6.3 Where required, exit marking audible notification appliances shall be installed in accordance with the manufacturer's instructions.

7.4.6.4* Where required, exit marking audible notification shall be located at the entrance to all building exits and areas of refuge as defined by the applicable building or fire code.

7.4.6.5 Where exit marking audible notification appliances are utilized to mark areas of refuge, they shall provide an audible signal distinct from that used for other exits that do not have areas of refuge.

7.4.7 Location of Audible Notification Appliances for a Building or Structure.

7.4.7.1 If ceiling heights allow, and unless otherwise permitted by 7.4.7.2 through 7.4.7.5, wall-mounted appliances shall have their tops above the finished floors at heights of not less than 2290 mm (90 in.) and below the finished ceilings at distances of not less than 150 mm (6 in.).

7.4.7.2 Ceiling-mounted or recessed appliances shall be permitted.

7.4.7.3 If combination audible/visible appliances are installed, the location of the installed appliance shall be determined by the requirements of 7.5.4.

7.4.7.4 Appliances that are an integral part of a smoke detector, smoke alarm, or other initiating device shall be located in accordance with the requirements for that device.

7.4.7.5 Mounting heights other than required by 7.4.7.1 and 7.4.7.2 shall be permitted by the authority having jurisdiction, provided the sound pressure level requirements of 7.4.2 and 7.4.3 are met.

7.4.8 Location of Audible Notification Appliances for Wide Area Signaling. Audible notification appliances for wide area signaling shall be installed in accordance with the requirements of the authority having jurisdiction, approved design documents, and the manufacturer's installation instruction to achieve the required performance.

7.5* Visible Characteristics — Public Mode.

7.5.1* Visible Signaling. Public mode visible signaling shall meet the requirements of Section 7.5 using visible notification appliances.

7.5.2 Light, Color, and Pulse Characteristics.

7.5.2.1 The flash rate shall not exceed two flashes per second (2 Hz) nor be less than one flash every second (1 Hz) throughout the listed voltage range of the appliance.

7.5.2.2 A maximum pulse duration shall be 0.2 second with a maximum duty cycle of 40 percent.

7.5.2.3 The pulse duration shall be defined as the time interval between initial and final points of 10 percent of maximum signal.

7.5.2.4* Lights used for fire alarm signaling only or to signal the intent for complete evacuation shall be clear or nominal white and shall not exceed 1000 cd (effective intensity).

7.5.2.5 Lights used to signal occupants to seek information or instructions shall be clear, nominal white, or other color as required by the emergency plan and the authority having jurisdiction for the area or building.

7.5.2.6* The strobe synchronization requirements of this chapter shall not apply where the visible notification appliances located inside the building are viewed from outside of the building.

7.5.3* Appliance Photometrics. The light output shall comply with the polar dispersion requirements of ANSI/UL 1971, *Standard for Safety Signaling Devices for Hearing Impaired*, or equivalent.

7.5.4 Appliance Location.

7.5.4.1* Wall-mounted appliances shall be mounted such that the entire lens is not less than 2030 mm (80 in.) and not greater than 2440 mm (96 in.) above the finished floor or at the mounting height specified using the performance-based alternative of 7.5.4.5.

7.5.4.2 Where low ceiling heights do not permit mounting at a minimum of 2030 mm (80 in.), visible appliances shall be mounted within 150 mm (6 in.) of the ceiling. The room size covered by a strobe of a given value shall be reduced by twice the difference between the minimum mounting height of 2030 mm (80 in.) and the actual, lower mounting height.

7.5.4.3* Spacing in Rooms.

7.5.4.3.1 Spacing shall be in accordance with either Table 7.5.4.3.1(a) and Figure 7.5.4.3.1 or Table 7.5.4.3.1(b).

7.5.4.3.2 Visible notification appliances shall be installed in accordance with Table 7.5.4.3.1(a), using one of the following:

(1) A single visible notification appliance.
(2) Two visible notification appliances located on opposite walls.

Copyright National Fire Protection Association
Provided by IHS under license with NFPA
No reproduction or networking permitted without license from IHS
Not for Resale

(3) *Two groups of visible notification appliances, where visual appliances of each group are synchronized, in the same room or adjacent space within the field of view. This shall include synchronization of strobes operated by separate systems.
(4) More than two visible notification appliances or groups of synchronized appliances in the same room or adjacent space within the field of view that flash in synchronization.

7.5.4.3.3 Room spacing in accordance with Table 7.5.4.3.1(a) and Figure 7.5.4.3.1 for wall-mounted appliances shall be based on locating the visible notification appliance at the halfway distance of the wall.

7.5.4.3.4 In square rooms with appliances not centered or in nonsquare rooms, the effective intensity (cd) from one visible wall-mounted notification appliance shall be determined by maximum room size dimensions obtained either by measuring the distance to the farthest wall or by doubling the distance to the farthest adjacent wall, whichever is greater, as required by Table 7.5.4.3.1(a) and Figure 7.5.4.3.1.

7.5.4.3.5 If a room configuration is not square, the square room size that allows the entire room to be encompassed or allows the room to be subdivided into multiple squares shall be used.

7.5.4.3.6* If ceiling heights exceed 9.14 m (30 ft), ceiling-mounted visible notification appliances shall be suspended at or below 9.14 m (30 ft) or wall-mounted visible notification appliance shall be installed in accordance with Table 7.5.4.3.1(a).

7.5.4.3.7 Table 7.5.4.3.1(b) shall be used if the ceiling-mounted visible notification appliance is at the center of the room. If the ceiling-mounted visible notification appliance is not located at the center of the room, the effective intensity (cd) shall be determined by doubling the distance from the appliance to the farthest wall to obtain the maximum room size.

Table 7.5.4.3.1(a) Room Spacing for Wall-Mounted Visible Appliances

Maximum Room Size		Minimum Required Light Output (Effective Intensity, cd)		
m	ft	One Light per Room	Two Lights per Room (Located on Opposite Walls)	Four Lights per Room (One Light per Wall)
6.10 × 6.10	20 × 20	15	NA	NA
8.53 × 8.53	28 × 28	30	Unknown	NA
9.14 × 9.14	30 × 30	34	15	NA
12.2 × 12.2	40 × 40	60	30	15
13.7 × 13.7	45 × 45	75	Unknown	19
15.2 × 15.2	50 × 50	94	60	30
16.5 × 16.5	54 × 54	110	Unknown	30
16.8 × 16.8	55 × 55	115	Unknown	28
18.3 × 18.3	60 × 60	135	95	30
19.2 × 19.2	63 × 63	150	Unknown	37
20.7 × 20.7	68 × 68	177	Unknown	43
21.3 × 21.3	70 × 70	184	95	60
24.4 × 24.4	80 × 80	240	135	60
27.4 × 27.4	90 × 90	304	185	95
30.5 × 30.5	100 × 100	375	240	95
33.5 × 33.5	110 × 110	455	240	135
36.6 × 36.6	120 × 120	540	305	135
39.6 × 39.6	130 × 130	635	375	185

NA: Not allowable.

Table 7.5.4.3.1(b) Room Spacing for Ceiling-Mounted Visible Appliances

Maximum Room Size		Maximum Ceiling Height		Minimum Required Light Output (Effective Intensity); One Light (cd)
m	ft	m	ft	
6.1 × 6.1	20 × 20	3.0	10	15
9.1 × 9.1	30 × 30	3.0	10	30
12.2 × 12.2	40 × 40	3.0	10	60
13.4 × 13.4	44 × 44	3.0	10	75
15.2 × 15.2	50 × 50	3.0	10	95
16.2 × 16.2	53 × 53	3.0	10	110
16.8 × 16.8	55 × 55	3.0	10	115
18.0 × 18.0	59 × 59	3.0	10	135
19.2 × 19.2	63 × 63	3.0	10	150
20.7 × 20.7	68 × 68	3.0	10	177
21.3 × 21.3	70 × 70	3.0	10	185
6.1 × 6.1	20 × 20	6.1	20	30
9.1 × 9.1	30 × 30	6.1	20	45
13.4 × 13.4	44 × 44	6.1	20	75
14.0 × 14.0	46 × 46	6.1	20	80
15.2 × 15.2	50 × 50	6.1	20	95
16.2 × 16.2	53 × 53	6.1	20	110
16.8 × 16.8	55 × 55	6.1	20	115
18.0 × 18.0	59 × 59	6.1	20	135
19.2 × 19.2	63 × 63	6.1	20	150
20.7 × 20.7	68 × 68	6.1	20	177
21.3 × 21.3	70 × 70	6.1	20	185
6.1 × 6.1	20 × 20	9.1	30	55
9.1 × 9.1	30 × 30	9.1	30	75
15.2 × 15.2	50 × 50	9.1	30	95
16.2 × 16.2	53 × 53	9.1	30	110
16.8 × 16.8	55 × 55	9.1	30	115
18.0 × 18.0	59 × 59	9.1	30	135
19.2 × 19.2	63 × 63	9.1	30	150
20.7 × 20.7	68 × 68	9.1	30	177
21.3 × 21.3	70 × 70	9.1	30	185

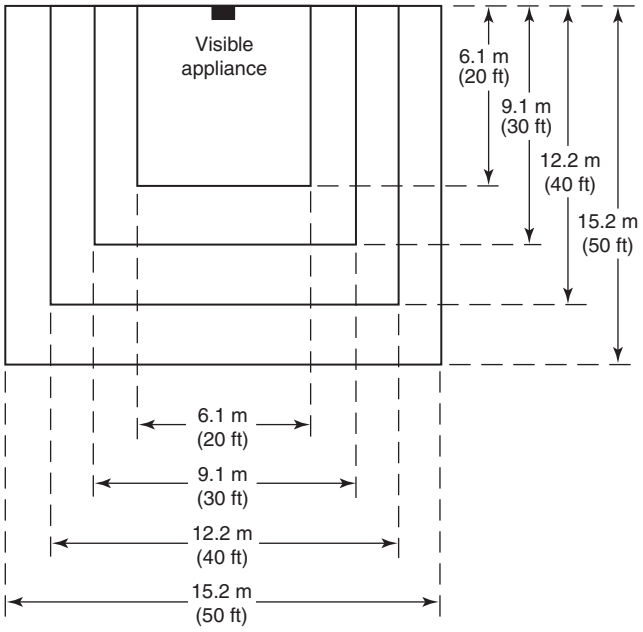

FIGURE 7.5.4.3.1 Room Spacing for Wall-Mounted Visible Appliances.

Copyright National Fire Protection Association
Provided by IHS under license with NFPA
No reproduction or networking permitted without license from IHS
Not for Resale

7.5.4.4* Spacing in Corridors.

7.5.4.4.1 The installation of visible notification appliances in corridors 6.1 m (20 ft) or less in width shall be in accordance with the requirements of either 7.5.4.3 or 7.5.4.4.

7.5.4.4.2 Subsection 7.5.4.4 shall apply to corridors not exceeding 6.1 m (20 ft) in width.

7.5.4.4.3 In a corridor application, visible appliances shall be rated not less than 15 cd.

7.5.4.4.4 Corridors greater than 6.1 m (20 ft) wide shall comply with the spacing requirements for rooms in accordance with 7.5.4.3.

7.5.4.4.5* Visible notification appliances shall be located not more than 4.57 m (15 ft) from the end of the corridor with a separation not greater than 30.4 m (100 ft) between appliances.

7.5.4.4.6 If there is an interruption of the concentrated viewing path, such as a fire door, an elevation change, or any other obstruction, the area shall be treated as a separate corridor.

7.5.4.4.7 In corridors where more than two visible notification appliances are in any field of view, they shall flash in synchronization.

7.5.4.4.8 Wall-mounted visible notification appliances in corridors shall be permitted to be mounted on either the end wall or the side wall of the corridor in accordance with spacing requirements of 7.5.4.4.5.

7.5.4.5* Performance-Based Alternative.

7.5.4.5.1 Any design that provides a minimum of 0.4036 lumens/m^2 (0.0375 lumens/ft^2) of illumination at any point within the covered area at all angles specified by the polar dispersion planes for wall or ceiling-mounted visual appliances in ANSI/UL 1971, *Standard for Safety Signaling Devices for Hearing Impaired*, or equivalent, as calculated for the maximum distance from the nearest visual notification appliance shall be permitted in lieu of the requirements of 7.5.4, excluding 7.5.4.6.

7.5.4.5.2 Documentation provided to the authority having jurisdiction shall include the following:

(1) Inverse Square Law calculations using each of the vertical and horizontal polar distribution angles in ANSI/UL 1971, *Standard for Safety Signaling Devices for Hearing Impaired*, or equivalent
(2) The calculations shall account for the effects of polar distribution using one of the following:
   (a) The percentages from the applicable table(s) in ANSI/UL 1971, *Standard for Safety Signaling Devices for Hearing Impaired*, or equivalent
   (b) The actual results of laboratory tests of the specific appliance to be used as recorded by the listing organization

7.5.4.6 Sleeping Areas.

7.5.4.6.1 Combination smoke detectors and visible notification appliances or combination smoke alarms and visible notification appliances shall be installed in accordance with the applicable requirements of Chapter 5, Chapter 7, and Chapter 11.

7.5.4.6.2* Table 7.5.4.6.2 shall apply to sleeping areas.

Table 7.5.4.6.2 Effective Intensity Requirements for Sleeping Area Visible Notification Appliances

Distance from Ceiling to Top of Lens		Intensity (cd)
mm	in.	
≥610	≥24	110
<610	<24	177

7.5.4.6.3 For rooms with a linear dimension greater than 4.87 m (16 ft), the visible notification appliance shall be located within 4.87 m (16 ft) of the pillow.

7.5.5 Location of Visible Notification Appliances for Wide Area Signaling. Visible notification appliances for wide area signaling shall be installed in accordance with the requirements of the authority having jurisdiction, approved design documents, and the manufacturer's instructions to achieve the required performance.

7.6* Visible Characteristics — Private Mode. Visible notification appliances used in the private mode shall be of a sufficient quantity and intensity, and located so as to meet the intent of the user and the authority having jurisdiction.

7.7 Supplementary Visible Signaling Method. A supplementary visible notification appliance shall be intended to augment an audible or visible signal.

7.7.1 A supplementary visible notification appliance shall comply with its marked rated performance.

7.7.2 Supplementary visible notification appliances shall be permitted to be located less than 2030 mm (80 in.) above the floor.

7.8 Textual Audible Appliances.

7.8.1 Speaker Appliances.

7.8.1.1 Speaker appliances shall comply with Section 7.4.

7.8.1.2* The sound pressure level, in dBA, of the fire alarm speaker appliance evacuation tone signals of the particular mode installed (public or private) shall comply with all the requirements in 7.4.2 (public) or 7.4.3 (private).

7.8.2 Telephone Appliances.

7.8.2.1 Telephone appliances shall be in accordance with EIA Tr 41.3, *Telephones*.

7.8.2.2 Wall-mounted telephone appliances or related jacks shall be not less than 910 mm (36 in.) and not more than 1680 mm (66 in.) above floor level with clear access to the appliance that is at least 760 mm (30 in.) wide.

7.8.2.3 If accessible to the general public, one telephone appliance per location shall be not more than 1220 mm (48 in.) above floor level.

7.9* Textual Visible Appliances.

7.9.1 Application. Textual visible appliances shall be permitted if used in addition to audible or visible, or both, notification appliances.

7.9.2 Performance. The information produced by textual visible appliances shall be legible.

Copyright National Fire Protection Association
Provided by IHS under license with NFPA
No reproduction or networking permitted without license from IHS
Not for Resale

7.9.3 Location.

7.9.3.1 Private Mode. Unless otherwise permitted by the authority having jurisdiction, all textual visible notification appliances in the private mode shall be located in rooms that are accessible only to those persons directly concerned with the implementation and direction of emergency action initiation and procedure in the areas protected by the system.

7.9.3.2 Public Mode. Textual visible notification appliances used in the public mode shall be located to ensure readability by the occupants or inhabitants of the protected area.

7.10 Tactile Appliances.

7.10.1 Application. Tactile appliances shall be permitted if used in addition to audible or visible, or both, notification appliances.

7.10.2* Performance. Tactile appliances shall meet the performance requirements of ANSI/UL 1971, *Standard for Safety Signaling Devices for Hearing Impaired*, or equivalent.

7.11* Standard Emergency Service Interface. Where required by the authority having jurisdiction, annunciators, information display systems, and controls for portions of a system provided for use by emergency service personnel shall be designed, arranged, and located in accordance with the requirements of the organizations intended to use the equipment.

7.12 Mass Notification Systems. See Annex E.

Chapter 8 Supervising Station Fire Alarm Systems

8.1* Application. The performance, installation, and operation of fire alarm systems at a continuously attended supervising station and between the protected premises and the continuously attended supervising station shall comply with the requirements of this chapter.

8.1.1* Where a protected premises fire alarm system has its signals sent to a supervising station, the entire system shall become a supervising station fire alarm system.

8.1.2 The requirements of Chapter 4, Chapter 6, and Chapter 10 shall also apply unless they are in conflict with this chapter.

8.1.3 The requirements of this chapter shall not apply to Chapter 11 unless otherwise noted.

8.2 General.

8.2.1 Alarm Signal Disposition. Except as permitted by 11.7.8.2, all fire alarm signals received by a supervising station shall be immediately retransmitted to the public fire service communications center.

8.2.2 Other Signal Disposition. Signals received at a supervising station, other than fire alarm, shall be handled as required by Section 8.3, 8.4, or 8.5.

8.2.3* Change of Service.

8.2.3.1 Supervising station customers or clients shall be notified in writing within 30 days of any scheduled change in service that results in signals from their property being handled by a different supervising station facility.

8.2.3.2 Where the supervising station provides the required testing and where service changes covered by 8.2.3.1 occur, the supervising station shall test all zones, points, and signals from each affected property in accordance with the requirements of Chapter 10.

8.2.3.3 Where the supervising station does not provide the required testing and where service changes covered by 8.2.3.1 occur, the supervising station shall notify the prime contractor of the need to test all zones, points, and signals from each affected property in accordance with the requirements of Chapter 10.

8.3 Fire Alarm Systems for Central Station Service. Fire alarm systems used to provide central station service shall comply with the general requirements and the use requirements of Section 8.3.

8.3.1 System Scope. Fire alarm systems for central station service shall include the central station physical plant, exterior communications channels, subsidiary stations, and fire alarm and signaling equipment located at the protected premises.

8.3.2* Service Scope. Section 8.3 shall apply to central station service, which consists of the following elements:

(1) Installation of fire alarm transmitters
(2) Alarm, guard, supervisory, and trouble signal monitoring
(3) Retransmission
(4) Associated record keeping and reporting
(5) Testing and maintenance
(6) Runner service

8.3.3 Contract Requirements. The central station service elements shall be provided under contract to a subscriber by one of the following:

(1) A listed central station that provides all of the elements of central station service with its own facilities and personnel.
(2) A listed central station that provides, as a minimum, the signal monitoring, retransmission, and associated record keeping and reporting with its own facilities and personnel and shall be permitted to subcontract all or any part of the installation, testing, and maintenance and runner service.
(3) A listed fire alarm service–local company that provides the installation, testing, and maintenance with its own facilities and personnel and that subcontracts the monitoring, retransmission, and associated record keeping and reporting to a listed central station. The required runner service shall be provided by the listed fire alarm service–local company with its own personnel or the listed central station with its own personnel.
(4) A listed central station that provides the installation, testing, and maintenance with its own facilities and personnel and that subcontracts the monitoring, retransmission, and associated record keeping and reporting to another listed central station. The required runner service shall be provided by either central station.

8.3.4* Indication of Central Station Service. The prime contractor shall conspicuously indicate that the fire alarm system providing service at a protected premises complies with all the requirements of this Code through the use of a systematic follow-up program under the control of the organization that has listed the prime contractor.

Copyright National Fire Protection Association
Provided by IHS under license with NFPA
No reproduction or networking permitted without license from IHS
Not for Resale

8.3.4.1 Documentation indicating code compliance of the fire alarm system shall be issued by the organization that has listed the prime contractor.

8.3.4.2 The documentation shall include, at a minimum, the following information:

(1) Name of the prime contractor involved with the ongoing code compliance of the central station service
(2)*Full description of the fire alarm system as installed
(3) Issue and expiration dates of the documentation
(4) Name, address, and contact information of the organization issuing the document
(5) Identification of the authority(ies) having jurisdiction for the central station service installation

8.3.4.3 The documentation shall be physically posted within 1 m (3 ft) of the fire alarm control unit, and copies of the documentation shall be made available to the authority(ies) having jurisdiction upon request.

8.3.4.4 A central repository of issued documentation, accessible to the authority having jurisdiction, shall be maintained by the organization that has listed the prime contractor.

8.3.4.5* Fire alarm system service that does not comply with all the requirements of Section 8.3 shall not be designated as central station service.

8.3.4.6* For the purpose of Section 8.3, the subscriber shall notify the prime contractor, in writing, of the identity of the authority(ies) having jurisdiction.

8.3.4.7 The authority(ies) having jurisdiction identified in 8.3.4.2(5) shall be notified of expiration or cancellation by the organization that has listed the prime contractor.

8.3.4.8 The subscriber shall surrender expired or canceled documentation to the prime contractor within 30 days of the termination date.

8.3.5 Facilities.

8.3.5.1 The central station building or that portion of a building occupied by a central station shall conform to the construction, fire protection, restricted access, emergency lighting, and power facilities requirements of the latest edition of ANSI/UL 827, *Standard for Safety Central-Station Alarm Services*.

8.3.5.2 Subsidiary station buildings or those portions of buildings occupied by subsidiary stations shall conform to the construction, fire protection, restricted access, emergency lighting, and power facilities requirements of the latest edition of ANSI/UL 827, *Standard for Safety Central-Station Alarm Services*.

8.3.5.2.1 All intrusion, fire, power, and environmental control systems for subsidiary station buildings shall be monitored by the central station in accordance with 8.3.5.

8.3.5.2.2 The subsidiary facility shall be inspected at least monthly by central station personnel for the purpose of verifying the operation of all supervised equipment, all telephones, all battery conditions, and all fluid levels of batteries and generators.

8.3.5.2.3 In the event of the failure of equipment at the subsidiary station or the communications channel to the central station, a backup shall be operational within 90 seconds.

8.3.5.2.4 With respect to 8.3.5.2.3, restoration of a failed unit shall be accomplished within 5 days.

8.3.5.2.5 Each communications channel shall be continuously supervised between the subsidiary station and the central station.

8.3.5.2.6 When the communications channel between the subsidiary station and the supervising station fails, the communications shall be switched to an alternate path. Public switched telephone network facilities shall be used only as an alternate path.

8.3.5.2.7 In the subsidiary station, there shall be a communications path, such as a cellular telephone, that is independent of the telephone cable between the subsidiary station and the serving wire center.

8.3.5.2.8 A plan of action to provide for restoration of services specified by this Code shall exist for each subsidiary station.

8.3.5.2.8.1 This plan shall provide for restoration of services within 4 hours of any impairment that causes loss of signals from the subsidiary station to the central station.

8.3.5.2.8.2 An exercise to demonstrate the adequacy of the plan shall be conducted at least annually.

8.3.6 Equipment and Personnel.

8.3.6.1 Equipment.

8.3.6.1.1 The central station and all subsidiary stations shall be equipped so as to receive and record all signals in accordance with 8.6.5.

8.3.6.1.2 Circuit-adjusting means for emergency operation shall be permitted to be automatic or to be provided through manual operation upon receipt of a trouble signal.

8.3.6.1.3 Computer-aided alarm and supervisory signal–processing hardware and software shall be listed for the purpose.

8.3.6.1.4 Power supplies shall comply with the requirements of Chapter 4.

8.3.6.1.5 Transmission means shall comply with the requirements of Section 8.6.

8.3.6.1.6* Two independent means shall be provided to retransmit a fire alarm signal to the designated public fire service communications center.

8.3.6.1.6.1 The use of a universal emergency number, such as the 911 public safety answering point, shall not meet the intent of this Code for the principal means of retransmission.

8.3.6.1.6.2 If the principal means of retransmission is not equipped to allow the communications center to acknowledge receipt of each fire alarm report, both means shall be used to retransmit.

8.3.6.1.6.3 The retransmission means shall be tested in accordance with Chapter 10.

8.3.6.1.6.4 The retransmission signal and the time and date of retransmission shall be recorded at the central station.

8.3.6.2 Personnel.

8.3.6.2.1 The central station shall have not less than two persons on duty at the central station at all times to ensure disposition of signals in accordance with the requirements of 8.3.7.

--`,,```,,,,````-`-`,,`,,`,`,,`---

Copyright National Fire Protection Association
Provided by IHS under license with NFPA
No reproduction or networking permitted without license from IHS
Not for Resale

8.3.6.2.2 Operation and supervision shall be the primary functions of the operators, and no other interest or activity shall take precedence over the protective service.

8.3.7 Disposition of Signals.

8.3.7.1 Alarm Signals.

8.3.7.1.1 Alarm signals initiated by manual fire alarm boxes, automatic fire detectors, waterflow from the automatic sprinkler system, or actuation of other fire suppression system(s) or equipment shall be treated as fire alarms.

8.3.7.1.2 The central station shall perform the following actions:

(1)*Immediately retransmit the alarm to the public fire service communications center.
(2) Dispatch a runner or technician to the protected premises to arrive within 2 hours after receipt of a signal if equipment needs to be manually reset by the prime contractor. Except where prohibited by the authority having jurisdiction, the runner or technician shall be permitted to be recalled prior to arrival at the premises if a qualified representative of the subscriber at the premises can provide the necessary resetting of the equipment and is able to place the system back in operating condition.
(3) Immediately notify the subscriber.
(4) Provide notice to the subscriber or authority having jurisdiction, or both, if required.

Exception: If the alarm signal results from a prearranged test, the actions specified by 8.3.7.1.2(1) and 8.3.7.1.2(3) shall not be required.

8.3.7.2 Guard's Tour Supervisory Signal.

8.3.7.2.1 Upon failure to receive a guard's tour supervisory signal within a 15-minute maximum grace period, the central station shall perform the following actions:

(1) Communicate without unreasonable delay with personnel at the protected premises
(2) Dispatch a runner to the protected premises to arrive within 30 minutes of the delinquency if communications cannot be established
(3) Report all delinquencies to the subscriber or authority having jurisdiction, or both, if required

8.3.7.2.2 Failure of the guard to follow a prescribed route in transmitting signals shall be handled as a delinquency.

8.3.7.3* Supervisory Signals. Upon receipt of a supervisory signal from a sprinkler system, other fire suppression system(s), or other equipment, the central station shall perform the following actions:

(1)*Communicate immediately with the persons designated by the subscriber and notify the fire department or law enforcement agency, or both, when required by the authority having jurisdiction
(2) Dispatch a runner or maintenance person to arrive within 2 hours to investigate

Exception: Where the supervisory signal is cleared in accordance with a scheduled procedure determined by 8.3.7.3(1).

(3) Notify the authority having jurisdiction when sprinkler systems or other fire suppression systems or equipment have been wholly or partially out of service for 8 hours
(4) When service has been restored, provide notice, if required, to the subscriber or the authority having jurisdiction, or both, as to the nature of the signal, the time of occurrence, and the restoration of service when equipment has been out of service for 8 hours or more

Exception: If the supervisory signal results from a prearranged test, the actions specified by 8.3.7.3(1), 8.3.7.3(3), and 8.3.7.3(4) shall not be required.

8.3.7.4 Trouble Signals. Upon receipt of trouble signals or other signals pertaining solely to matters of equipment maintenance of the fire alarm systems, the central station shall perform the following actions:

(1)*Communicate immediately with persons designated by the subscriber
(2) Dispatch personnel to arrive within 4 hours to initiate maintenance, if necessary
(3) When the interruption is more than 8 hours, provide notice to the subscriber and the fire department if so required by the authority having jurisdiction as to the nature of the interruption, the time of occurrence, and the restoration of service

8.3.7.5 Test Signals.

8.3.7.5.1 All test signals received shall be recorded to indicate date, time, and type.

8.3.7.5.2 Test signals initiated by the subscriber, including those for the benefit of an authority having jurisdiction, shall be acknowledged by central station personnel whenever the subscriber or authority inquires.

8.3.7.5.3* Any test signal not received by the central station shall be investigated immediately and action shall be taken to reestablish system integrity.

8.3.7.5.4 The central station shall dispatch personnel to arrive within 2 hours if protected premises equipment needs to be manually reset after testing.

8.3.7.5.5 The prime contractor shall provide each of its representatives and each alarm system user with a unique personal identification code.

8.3.7.5.6 In order to authorize the placing of an alarm system into test status, a representative of the prime contractor or an alarm system user shall first provide the central station with his or her personal identification code.

8.3.8 Record Keeping and Reporting.

8.3.8.1 Complete records of all signals received shall be retained for at least 1 year.

8.3.8.2 Testing and maintenance records shall be retained as required by 10.6.3.

8.3.8.3 The central station shall make arrangements to furnish reports of signals received to the authority having jurisdiction in a manner approved by the authority having jurisdiction.

8.3.9 Testing and Maintenance. Testing and maintenance for central station service shall be performed in accordance with Chapter 10.

8.4 Proprietary Supervising Station Systems.

8.4.1 Application. Supervising facilities of proprietary fire alarm systems shall comply with the operating procedures of Section 8.4. The facilities, equipment, personnel, operation,

Copyright National Fire Protection Association
Provided by IHS under license with NFPA
No reproduction or networking permitted without license from IHS
Not for Resale

testing, and maintenance of the proprietary supervising station shall also comply with Section 8.4.

8.4.2 General.

8.4.2.1 Proprietary supervising stations shall be operated by trained, competent personnel in constant attendance who are responsible to the owner of the protected property.

8.4.2.2 The protected property shall be either a contiguous property or noncontiguous properties under one ownership.

8.4.2.3 If a protected premises fire alarm control unit is integral to or co-located with the supervising station equipment, the requirements of Section 8.6 shall not apply.

8.4.2.4* The systems of Section 8.4 shall be permitted to be interconnected to other systems intended to make the premises safer in the event of fire or other emergencies indicative of hazards to life or property.

8.4.3 Facilities.

8.4.3.1 The proprietary supervising station shall be located in a fire-resistive, detached building or in a cutoff room and shall not be exposed to the hazardous parts of the premises that are protected.

8.4.3.2 Access to the proprietary supervising station shall be restricted to those persons directly concerned with the implementation and direction of emergency action and procedure.

8.4.3.3 The proprietary supervising station, as well as remotely located power rooms for batteries or engine-driven generators, shall be provided with portable fire extinguishers that comply with the requirements of NFPA 10, *Standard for Portable Fire Extinguishers*.

8.4.3.4 The emergency lighting system shall comply with the requirements of 8.4.3.4.1 through 8.4.3.4.3.

8.4.3.4.1 The proprietary supervising station shall be provided with an automatic emergency lighting system.

8.4.3.4.2 The emergency source shall be independent of the primary lighting source.

8.4.3.4.3 In the event of a loss of the primary lighting for the supervising station, the emergency lighting system shall provide illumination for a period of not less than 26 hours to permit the operators to carry on operations and shall be tested in accordance with the requirements of Chapter 10.

8.4.3.5 If 25 or more protected buildings or premises are connected to a subsidiary station, both of the following shall be provided at the subsidiary station:

(1) Automatic means for receiving and recording signals under emergency-staffing conditions
(2) A telephone

8.4.4 Equipment and Personnel.

8.4.4.1 Signal-Receiving Equipment.

8.4.4.1.1 Signal-receiving equipment in a proprietary supervising station shall comply with 8.4.4.

8.4.4.1.2 Provision shall be made to designate the building in which a signal originates.

8.4.4.1.3 The floor, section, or other subdivision of the building in which a signal originates shall be designated at the proprietary supervising station or at the building that is protected.

Exception: Where the area, height, or special conditions of occupancy make detailed designation unessential as approved by the authority having jurisdiction.

8.4.4.1.4 Designation, as required by 8.4.4.1.2 and 8.4.4.1.3, shall use private-mode notification appliances approved by the authority having jurisdiction.

8.4.4.2 Signal-Alerting Equipment.

8.4.4.2.1 The proprietary supervising station shall have, in addition to a recording device, two different means for alerting the operator when each signal is received that indicates a change of state of any connected initiating device circuit.

8.4.4.2.1.1 One of these means shall be an audible signal, which shall persist until manually acknowledged.

8.4.4.2.1.2 Means shall include the receipt of alarm, supervisory, and trouble signals, including signals indicating restoration.

8.4.4.2.1.3 If means is provided in the proprietary supervising station to identify the type of signal received, a common audible indicating appliance shall be permitted to be used for alarm, supervisory, and trouble indication.

8.4.4.2.1.4 At a proprietary supervising station, an audible trouble signal shall be permitted to be silenced, provided the act of silencing does not prevent the signal from operating immediately upon receipt of a subsequent trouble signal.

8.4.4.2.2 All signals required to be received by the proprietary supervising station that show a change in status shall be automatically and permanently recorded, including time and date of occurrence, in a form that expedites operator interpretation in accordance with any one of the means detailed in 8.4.4.2.2.1 through 8.4.4.2.2.4.

8.4.4.2.2.1 If a visual display is used that automatically provides change of status information for each required signal, including type and location of occurrence, any form of automatic permanent visual record shall be permitted.

(A) The recorded information shall include the content described in 8.4.4.2.2.

(B) The visual display shall show status information content at all times and be distinctly different after the operator has manually acknowledged each signal.

(C) Acknowledgment shall produce recorded information indicating the time and date of acknowledgment.

8.4.4.2.2.2 If a visual display is not provided, required signal content information shall be automatically recorded on duplicate, permanent visual recording instruments.

8.4.4.2.2.3 One recording instrument shall be used for recording all incoming signals, while the other shall be used for required fire, supervisory, and trouble signals only.

(A) Failure to acknowledge a signal shall not prevent subsequent signals from recording.

(B) Restoration of the signal to its prior condition shall be recorded.

8.4.4.2.2.4 In the event that a system combines the use of a sequential visual display and recorded permanent visual presentation, the required signal content information shall be displayed and recorded.

Copyright National Fire Protection Association
Provided by IHS under license with NFPA
No reproduction or networking permitted without license from IHS
Not for Resale

(A) The visual information component shall be retained either on the display until manually acknowledged or repeated at intervals not greater than 5 seconds, for durations of 2 seconds each, until manually acknowledged.

(B) Each new displayed status change shall be accompanied by an audible indication that persists until manual acknowledgment of the signal is performed.

8.4.4.3* Redisplay of Status. A means shall be provided for the operator to redisplay the status of required signal-initiating inputs that have been acknowledged but not yet restored.

8.4.4.3.1 If the system retains the signal on the visual display until manually acknowledged, subsequent recorded presentations shall not be inhibited upon failure to acknowledge.

8.4.4.3.2 Fire alarm signals shall be segregated on a separate visual display in this configuration.

Exception: Fire alarm signals shall not be required to be segregated on a separate display if given priority status on the common visual display.

8.4.4.4 Display Rate. To facilitate the prompt receipt of fire alarm signals from systems handling other types of signals that are able to produce multiple simultaneous status changes, the requirements of either of the following shall be met:

(1) The system shall record simultaneous status changes at a rate not slower than either a quantity of 50 or 10 percent of the total number of initiating device circuits connected, within 90 seconds, whichever number is smaller, without loss of any signal.
(2) The system shall either display or record fire alarm signals at a rate not slower than one every 10 seconds, regardless of the rate or number of status changes occurring, without loss of any signals.

Exception: If fire alarm, waterflow alarm, and sprinkler supervisory signals and their associated trouble signals are the only signals processed by the system, the rate of recording shall not be slower than one signal every 30 seconds.

8.4.4.5 Trouble Signals. Trouble signals and their restoration shall be automatically indicated and recorded at the proprietary supervising station.

8.4.4.5.1 The recorded information for the occurrence of any trouble condition of signaling line circuit, leg facility, or trunk facility that prevents receipt of alarm signals at the proprietary supervising station shall be such that the operator is able to determine the presence of the trouble condition.

8.4.4.5.2 Trouble conditions in a leg facility shall not affect or delay receipt of signals at the proprietary supervising station from other leg facilities on the same trunk facility.

8.4.4.6 Personnel.

8.4.4.6.1 At least two operators shall be on duty at all times. One of the two operators shall be permitted to be a runner.

Exception: If the means for transmitting alarms to the fire department is automatic, at least one operator shall be on duty at all times.

8.4.4.6.2 When the runner is not in attendance at the proprietary supervising station, the runner shall establish two-way communications with the station at intervals not exceeding 15 minutes.

Exception: Where two or more operators are on duty in the supervising station, a runner physically in attendance at a noncontiguous protected premises and immediately available via telephone or other approved means of communication shall not be required to maintain two-way communications at 15-minute intervals if that runner is not responsible for another protected premises.

8.4.4.6.3 The primary duties of the operator(s) shall be to monitor signals, operate the system, and take such action as shall be required by the authority having jurisdiction.

8.4.4.6.4 The operator(s) shall not be assigned any additional duties that would take precedence over the primary duties.

8.4.5 Operations.

8.4.5.1 Communications and Transmission Channels.

8.4.5.1.1 All communications and transmission channels between the proprietary supervising station and the protected premises fire alarm control unit shall be operated manually or automatically once every 24 hours to verify operation.

8.4.5.1.2 If a communications or transmission channel fails to operate, the operator shall immediately notify the person(s) identified by the owner or authority having jurisdiction.

8.4.5.2 Operator Controls.

8.4.5.2.1 All operator controls at the proprietary supervising station(s) designated by the authority having jurisdiction shall be operated at each change of shift.

8.4.5.2.2 If operator controls fail, the operator shall immediately notify the person(s) identified by the owner or authority having jurisdiction.

8.4.5.3 Retransmission. Indication of a fire shall be promptly retransmitted to the public fire service communications center or other locations accepted by the authority having jurisdiction, indicating the building or group of buildings from which the alarm has been received.

8.4.5.4* Retransmission Means. The means of retransmission shall be accepted by the authority having jurisdiction and shall be in accordance with Section 8.3, Section 8.5, or Chapter 9.

Exception: Secondary power supply capacity shall be as required in Chapter 4.

8.4.5.5* Coded Retransmission. Retransmission by coded signals shall be confirmed by two-way voice communications indicating the nature of the alarm.

8.4.5.6 Dispositions of Signals.

8.4.5.6.1 Alarms. Upon receipt of a fire alarm signal, the proprietary supervising station operator shall initiate action to perform the following:

(1) Immediately notify the fire department, the plant fire brigade, and such other parties as the authority having jurisdiction requires
(2) Dispatch a runner or technician to the alarm location to arrive within 2 hours after receipt of a signal
(3) Restore the system as soon as possible after disposition of the cause of the alarm signal

8.4.5.6.2 Guard's Tour Supervisory Signal. If a guard's tour supervisory signal is not received from a guard within a 15-minute maximum grace period, or if a guard fails to follow a prescribed route in transmitting the signals (where a prescribed route has been established), the proprietary supervising station operator shall initiate action to perform the following:

--`,,```,,,,````-`-`,,`,,`,`,,`---

Copyright National Fire Protection Association
Provided by IHS under license with NFPA
No reproduction or networking permitted without license from IHS
Not for Resale

(1) Communicate at once with the protected areas or premises by telephone, radio, calling back over the system circuit, or other means accepted by the authority having jurisdiction
(2) Dispatch a runner to arrive within 30 minutes to investigate the delinquency if communications with the guard cannot be promptly established

8.4.5.6.3 Supervisory Signals. Upon receipt of sprinkler system and other supervisory signals, the proprietary supervising station operator shall initiate action to perform the following, if required:

(1) Communicate immediately with the designated person(s) to ascertain the reason for the signal
(2) Dispatch personnel to arrive within 2 hours to investigate, unless supervisory conditions are promptly restored
(3) Notify the fire department if required by the authority having jurisidiction
(4) Notify the authority having jurisdiction when sprinkler systems are wholly or partially out of service for 8 hours or more
(5) Provide written notice to the authority having jurisdiction as to the nature of the signal, time of occurrence, and restoration of service, when equipment has been out of service for 8 hours or more

8.4.5.6.4 Trouble Signals. Upon receipt of trouble signals or other signals pertaining solely to matters of equipment maintenance of the fire alarm system, the proprietary supervising station operator shall initiate action to perform the following, if required:

(1) Communicate immediately with the designated person(s) to ascertain reason for the signal
(2) Dispatch personnel to arrive within 4 hours to initiate maintenance, if necessary
(3) Notify the fire department if required by the authority having jurisdiction
(4) Notify the authority having jurisdiction when interruption of service exists for 4 hours or more
(5) When equipment has been out of service for 8 hours or more, provide written notice to the authority having jurisdiction as to the nature of the signal, time of occurrence, and restoration of service

8.4.6 Record Keeping and Reporting.

8.4.6.1 Complete records of all signals received shall be retained for at least 1 year.

8.4.6.2 Testing and maintenance records shall be retained as required by 10.6.3.

8.4.6.3 The proprietary supervising station shall make arrangements to furnish reports of signals received to the authority having jurisdiction in a form the authority will accept.

8.4.7 Testing and Maintenance. Testing and maintenance of proprietary fire alarm systems shall be performed in accordance with Chapter 10.

8.5 Remote Supervising Station Fire Alarm Systems.

8.5.1 Application and General.

8.5.1.1 Section 8.5 shall apply where central station service is neither required nor elected.

8.5.1.2 The installation, maintenance, testing, and use of a remote supervising station fire alarm system that serves properties under various ownership from a remote supervising station shall comply with the requirements of Section 8.5.

8.5.1.3 Remote supervising station physical facilities, equipment, operating personnel, response, retransmission, signals, reports, and testing shall comply with the minimum requirements of Section 8.5.

8.5.1.4 Remote supervising station fire alarm systems shall provide an automatic audible and visible indication of alarm, supervisory, and trouble conditions at a location remote from the protected premises.

8.5.1.5 Section 8.5 shall not require the use of audible or visible notification appliances other than those required at the remote supervising station. If it is desired to provide fire alarm evacuation signals in the protected premises, the alarm signals, circuits, and controls shall comply with the provisions of Chapter 6 and Chapter 7 in addition to the provisions of Section 8.5.

8.5.1.6 The loading capacities of the remote supervising station equipment for any approved method of transmission shall be as designated in Section 8.6.

8.5.2* Facilities.

8.5.2.1 Fire alarm systems utilizing remote supervising station connections shall transmit fire alarm and supervisory signals to a facility meeting the requirements of either 8.5.2.1.1 or 8.5.2.1.2.

8.5.2.1.1 Fire alarm, supervisory, and trouble signals shall be permitted to be received at the public fire service communications center, at the fire station, or at the governmental agency that has the public responsibility for taking prescribed action to ensure response upon receipt of a fire alarm signal.

8.5.2.1.2* Where permitted by the authority having jurisdiction, fire alarm, supervisory, and trouble signals shall be permitted to be received at an alternate location approved by the authority having jurisdiction.

8.5.2.2 Trouble signals shall be received at a constantly attended location that has personnel on duty who are trained to recognize the type of signal received and to take prescribed action. The location shall be permitted to be other than that at which alarm and supervisory signals are received.

8.5.2.3 If locations other than the public fire service communications center are used for the receipt of signals, access to receiving equipment shall be restricted in accordance with the requirements of the authority having jurisdiction.

8.5.3 Equipment and Personnel.

8.5.3.1 Signal-receiving equipment shall indicate receipt of each signal both audibly and visibly.

8.5.3.1.1 Audible signals shall meet the requirements of Chapter 7 for the private operating mode.

8.5.3.1.2 Means for silencing alarm, supervisory, and trouble signals shall be provided and shall be arranged so that subsequent signals shall re-sound.

8.5.3.1.3 A trouble signal shall be received when the system or any portion of the system at the protected premises is placed in a bypass or test mode.

8.5.3.1.4 An audible and visible indication shall be provided upon restoration of the system after receipt of any signal.

Copyright National Fire Protection Association
Provided by IHS under license with NFPA
No reproduction or networking permitted without license from IHS
Not for Resale

8.5.3.1.5 If visible means are provided in the remote supervising station to identify the type of signal received, a common audible notification appliance shall be permitted to be used.

8.5.3.2 Power supplies shall comply with the requirements of Chapter 4.

8.5.3.3 Transmission means shall comply with the requirements of Section 8.6.

8.5.3.4 Retransmission of an alarm signal, if required, shall be by one of the following methods, which appear in descending order of preference as follows:

(1) A dedicated circuit that is independent of any switched telephone network. This circuit shall be permitted to be used for voice or data communications.
(2) A one-way (outgoing only) telephone at the remote supervising station that utilizes the public switched telephone network. This telephone shall be used primarily for voice transmission of alarms to a telephone at the public fire service communications center that cannot be used for outgoing calls.
(3) A private radio system using the fire department frequency, where permitted by the fire department.
(4) Other methods accepted by the authority having jurisdiction.

8.5.3.5 Personnel staffing and duties shall comply with 8.5.3.5.1 and 8.5.3.5.2.

8.5.3.5.1 The remote supervising station shall have not less than two trained and competent persons on duty at the remote supervising station at all times to ensure disposition of signals in accordance with the requirements of 8.5.4.

8.5.3.5.2 Duties pertaining to other than operation of the remote supervising station receiving and transmitting equipment shall be permitted subject to the approval of the authority having jurisdiction.

8.5.4 Operations.

8.5.4.1 If the remote supervising station is at a location other than the public fire service communications center, alarm signals shall be immediately retransmitted to the public fire service communications center.

8.5.4.2 Upon receipt of an alarm, supervisory, or trouble signal by the remote supervising station other than the public fire service communications center, the operator on duty shall be responsible for notifying the owner or the owner's designated representative immediately.

8.5.4.3 All operator controls at the remote supervising station shall be operated at the beginning of each shift or change in personnel, and the status of all alarm, supervisory, and trouble signals shall be noted and recorded.

8.5.5 Record Keeping and Reporting.

8.5.5.1 A permanent record of the time, date, and location of all signals and restorations received and the action taken shall be maintained for at least 1 year and shall be able to be provided to the authority having jurisdiction.

8.5.5.2 Testing and maintenance records shall be retained as required in 10.6.3.

8.5.5.3 Records shall be permitted to be created by manual means.

8.5.6 Inspection, Testing, and Maintenance.

8.5.6.1 Inspection, testing, and maintenance for remote supervising stations shall be performed in accordance with Chapter 10.

8.6 Communications Methods for Supervising Station Fire Alarm Systems.

8.6.1* Application. The methods of communications between the protected premises and the supervising station shall comply with the requirements in Section 8.6. These requirements shall include the following:

(1) The transmitter located at the protected premises
(2) The transmission channel between the protected premises and the supervising station or subsidiary station
(3) If used, any subsidiary station and its communications channel
(4) The signal receiving, processing, display, and recording equipment at the supervising station

Exception: Transmission channels owned by and under the control of the protected premises owner, that are not facilities leased from a supplier of communications service capabilities, such as video cable, telephone, or other communications services that are also offered to other customers.

8.6.2 General.

8.6.2.1 Master Control Unit. If the protected premises master control unit is neither integral to nor co-located with the supervising station, the communications methods of Section 8.6 shall be used to connect the protected premises to either a subsidiary station, if used, or a supervising station for central station service in accordance with Section 8.3, proprietary station in accordance with Section 8.4, or remote station in accordance with Section 8.5.

8.6.2.2* Alternate Methods. Nothing in Chapter 8 shall be interpreted as prohibiting the use of listed equipment using alternate communications methods that provide a level of reliability and supervision consistent with the requirements of Chapter 4 and the intended level of protection.

8.6.2.3 Multiple Buildings. For multiple building premises, the requirements of 4.4.6.6.2 shall apply to the alarm, supervisory, and trouble signals transmitted to the supervising station.

8.6.2.4 Equipment.

8.6.2.4.1 Fire alarm system equipment and installations shall comply with Federal Communication Commission (FCC) rules and regulations, as applicable, concerning the following:

(1) Electromagnetic radiation
(2) Use of radio frequencies
(3) Connection to the public switched telephone network of telephone equipment, systems, and protection apparatus

8.6.2.4.2 Radio receiving equipment shall be installed in compliance with NFPA 70, *National Electrical Code*, Article 810.

8.6.2.4.3 The external antennas of all radio transmitting and receiving equipment shall be protected in order to minimize the possibility of damage by static discharge or lightning.

8.6.2.5 Adverse Conditions.

8.6.2.5.1 For active and two-way RF multiplex systems, the occurrence of an adverse condition on the transmission channel between a protected premises and the supervising station that prevents the transmission of any status change signal shall

Copyright National Fire Protection Association
Provided by IHS under license with NFPA
No reproduction or networking permitted without license from IHS
Not for Resale

be automatically indicated and recorded at the supervising station. This indication and record shall identify the affected portions of the system so that the supervising station operator will be able to determine the location of the adverse condition by trunk or leg facility, or both.

8.6.2.5.2 For a one-way radio alarm system, the system shall be supervised to ensure that at least two independent radio alarm repeater station receivers (RARSRs) are receiving signals for each radio alarm transmitter (RAT) during each 24-hour period.

8.6.2.5.2.1 The occurrence of a failure to receive a signal by either RARSR shall be automatically indicated and recorded at the supervising station.

8.6.2.5.2.2 The indication shall identify which RARSR failed to receive such supervisory signals.

8.6.2.5.2.3 Received test signals shall not be required to be indicated at the supervising station.

8.6.2.5.3 For active and two-way RF multiplex systems that are part of a central station fire alarm system, restoration of service to the affected portions of the system shall be automatically recorded. When service is restored, the first status change of any initiating device circuit, any initiating device directly connected to a signaling line circuit, or any combination thereof that occurred at any of the affected premises during the service interruption also shall be recorded.

8.6.2.6 Dual Control.

8.6.2.6.1 Dual control, if required, shall provide for redundancy in the form of a standby circuit or other alternate means of transmitting signals over the primary trunk portion of a transmission channel.

8.6.2.6.1.1 The same method of signal transmission shall be permitted to be used over separate routes, or alternate methods of signal transmission shall be permitted to be used.

8.6.2.6.1.2 Public switched telephone network facilities shall be used only as an alternate method of transmitting signals.

8.6.2.6.2 If using facilities leased from a telephone company, that portion of the primary trunk facility between the supervising station and its serving wire center shall not be required to comply with the separate routing requirement of the primary trunk facility. Dual control, if used, shall require supervision as follows:

(1) Dedicated facilities that are able to be used on a full-time basis, and whose use is limited to signaling purposes as defined in this Code, shall be exercised at least once every hour.
(2) Public switched telephone network facilities shall be exercised at least once every 24 hours.

8.6.3 Communications Methods.

8.6.3.1 Active Multiplex Transmission Systems.

8.6.3.1.1 The multiplex transmission channel shall terminate in a transmitter at the protected premises and in a system unit at the supervising station.

8.6.3.1.1.1 The derived channel shall terminate in a transmitter at the protected premises and in derived channel equipment at a subsidiary station location or a telephone company wire center.

8.6.3.1.1.2 The derived channel equipment at the subsidiary station location or a telephone company wire center shall select or establish the communications with the supervising station.

8.6.3.1.2* Operation of the transmission channel shall conform to the requirements of this Code whether channels are private facilities, such as microwave, or leased facilities furnished by a communications utility company. If private signal transmission facilities are used, the equipment necessary to transmit signals shall also comply with the requirements for duplicate equipment or replacement of critical components, as described in 8.6.5.2.

8.6.3.1.2.1 The trunk transmission channels shall be dedicated facilities for the main channel.

Exception: Derived channel scanners with no more than 32 legs shall be permitted to use the public switched telephone network for the main channel.

8.6.3.1.2.2 For Type 1 multiplex systems, the public switched telephone network facilities shall be permitted to be used for the alternate channel.

8.6.3.1.3 Derived channel signals shall be permitted to be transmitted over the leg facility, which shall be permitted to be shared by the telephone equipment under all on-hook and off-hook operating conditions.

8.6.3.1.4 If derived channel equipment uses the public switched telephone network to communicate with a supervising station, such equipment shall meet the requirements of 8.6.3.2.

8.6.3.1.5 The maximum end-to-end operating time parameters allowed for an active multiplex system shall be as follows:

(1) The maximum allowable time lapse from the initiation of a single fire alarm signal until it is recorded at the supervising station shall not exceed 90 seconds. When any number of subsequent fire alarm signals occur at any rate, they shall be recorded at a rate no slower than one every 10 additional seconds.
(2) *The maximum allowable time lapse from the occurrence of an adverse condition in any transmission channel until recording of the adverse condition is started shall not exceed 90 seconds for Type 1 and Type 2 systems and 200 seconds for Type 3 systems. The requirements of 8.6.3.1.6 shall apply.
(3) In addition to the maximum operating time allowed for fire alarm signals, the requirements of one of the following shall be met:
    (a) A system unit that has more than 500 initiating device circuits shall be able to record not less than 50 simultaneous status changes within 90 seconds.
    (b) A system unit having fewer than 500 initiating device circuits shall be able to record not less than 10 percent of the total number of simultaneous status changes within 90 seconds.

Exception: Proprietary supervising station systems that have operating time requirements specified in 8.4.4.4 through 8.4.4.6.

8.6.3.1.6 The classifications for active multiplex systems shall be divided into three categories on the basis of their ability to perform under adverse conditions of their transmission channels. The system classifications shall be as described in 8.6.3.1.6.1 through 8.6.3.1.6.3.

8.6.3.1.6.1 A Type 1 system shall have dual control as described in 8.6.2.6.

Copyright National Fire Protection Association
Provided by IHS under license with NFPA
No reproduction or networking permitted without license from IHS
Not for Resale

(A) An adverse condition on a trunk or leg facility shall not prevent the transmission of signals from any other trunk or leg facility, except those signals dependent on the portion of the transmission channel in which the adverse condition has occurred.

(B) An adverse condition limited to a leg facility shall not interrupt service on any trunk or other leg facility.

(C) The requirements of 8.6.2.1 through 8.6.2.5 shall be met by Type 1 systems.

8.6.3.1.6.2 A Type 2 system shall have the same requirements as a Type 1 system.

Exception: Dual control of the primary trunk facility shall not be required.

8.6.3.1.6.3 A Type 3 system shall automatically indicate and record at the supervising station the occurrence of an adverse condition on the transmission channel between a protected premises and the supervising station. The requirements of 8.6.2 shall be met.

Exception: The requirements of 8.6.2.6 shall not apply.

8.6.3.1.7* Allowable system loading capacities of active multiplex systems shall be in accordance with Table 8.6.3.1.7 unless otherwise permitted by 8.6.3.1.8.

8.6.3.1.8 If the signal receiving, processing, display, and recording equipment are duplicated at the supervising station and a switchover is able to be accomplished in not more than 30 seconds with no loss of signals during this period, the capacity of a system unit shall be unlimited.

8.6.3.2 Digital Alarm Communicator Systems.

8.6.3.2.1 Digital Alarm Communicator Transmitter (DACT).

8.6.3.2.1.1* Public Switched Network. A DACT shall be connected to the public switched telephone network upstream of any private telephone system at the protected premises.

(A) The connections to the public switched telephone network shall be under the control of the subscriber for whom service is being provided by the supervising station fire alarm system.

(B) Special attention shall be required to ensure that this connection is made only to a loop start telephone circuit and not to a ground start telephone circuit.

Exception: If public cellular telephone service is used as a secondary means of transmission, the requirements of 8.6.3.2.1.1 shall not apply to the cellular telephone service.

8.6.3.2.1.2 Signal Verification. All information exchanged between the DACT at the protected premises and the digital alarm communicator receiver (DACR) at the supervising or subsidiary station shall be by digital code or some other approved means. Signal repetition, digital parity check, or some other approved means of signal verification shall be used.

8.6.3.2.1.3* Requirements for DACTs.

(A) A DACT shall be configured so that when it is required to transmit a signal to the supervising station, it shall seize the telephone line (going off-hook) at the protected premises and disconnect an outgoing or incoming telephone call and prevent use of the telephone line for outgoing telephone calls until signal transmission has been completed. A DACT shall not be connected to a party line telephone facility.

Table 8.6.3.1.7 Loading Capacities for Active Multiplex Systems

	System Type		
Trunks	**Type 1**	**Type 2**	**Type 3**
Maximum number of fire alarm service initiating device circuits per primary trunk facility	5,120	1,280	256
Maximum number of leg facilities for fire alarm service per primary trunk facility	512	128	64
Maximum number of leg facilities for all types of fire alarm service per secondary trunk facility[a]	128	128	128
Maximum number of all types of initiating device circuits per primary trunk facility in any combination[a]	10,240	2,560	512
Maximum number of leg facilities for all types of fire alarm service per primary trunk facility in any combination[a]	1,024	256	128
System Units at the Supervising Station			
Maximum number of all types of initiating device circuits per system unit[a]	10,240[b]	10,240[b]	10,240[b]
Maximum number of fire protecting buildings and premises per system unit	512[b]	512[b]	512[b]
Maximum number of fire alarm service initiating device circuits per system unit	5,120[b]	5,120[b]	5,120[b]
Systems Emitting from Subsidiary Station[c]	—	—	—

[a]Includes every initiating device circuit (e.g., waterflow, fire alarm, supervisory, guard, burglary, hold-up).
[b]Subsection 8.6.3.1.8 shall apply.
[c]Same as system units at the supervising station.

(B) A DACT shall have the means to satisfactorily obtain a dial tone, dial the number(s) of the DACR, obtain verification that the DACR is able to receive signals, transmit the signal, and receive acknowledgment that the DACR has accepted that signal. In no event shall the time from going off-hook to on-hook exceed 90 seconds per attempt.

(C)* A DACT shall have means to reset and retry if the first attempt to complete a signal transmission sequence is unsuccessful. A failure to complete connection shall not prevent subsequent attempts to transmit an alarm where such alarm is generated from any other initiating device circuit or signaling line circuit, or both. Additional attempts shall be made until the signal transmission sequence has been completed, up to a minimum of 5 and a maximum of 10 attempts.

(D) If the maximum number of attempts to complete the sequence is reached, an indication of the failure shall be made at the premises.

Copyright National Fire Protection Association
Provided by IHS under license with NFPA
No reproduction or networking permitted without license from IHS
Not for Resale

8.6.3.2.1.4 Transmission Channels.

(A)* A system employing a DACT shall employ one telephone line (number). In addition, one of the following transmission means shall be employed:

(1) A second telephone line (number)
(2) A cellular telephone connection
(3) A one-way radio system
(4) A one-way private radio alarm system
(5) A private microwave radio system
(6) A two-way RF multiplex system
(7) A transmission means complying with 8.6.4

Exception: One telephone line (number) equipped with a derived local channel or a single integrated services digital network (ISDN) telephone line using a terminal adapter specifically listed for supervising station fire alarm service, where the path between the transmitter and the switched telephone network serving central office is monitored for integrity so that the occurrence of an adverse condition in the path shall be annunciated at the supervising station within 200 seconds.

(B) The following requirements shall apply to all combinations listed in 8.6.3.2.1.4(A):

(1) Both channels shall be supervised in a manner approved for the means of transmission employed.
(2) Both channels shall be tested at intervals not exceeding 24 hours.

Exception No. 1: For public cellular telephone service, a verification (test) signal shall be transmitted at least monthly.

Exception No. 2: Where two telephone lines (numbers) are used, it shall be permitted to test each telephone line (number) at alternating 24-hour intervals.

(3) The failure of either channel shall send a trouble signal on the other channel within 4 minutes.
(4) When one transmission channel has failed, all status change signals shall be sent over the other channel.

Exception: Where used in combination with a DACT, a derived local channel shall not be required to send status change signals other than those indicating that adverse conditions exist on the telephone line (number).

(5) The primary channel shall be capable of delivering an indication to the DACT that the message has been received by the supervising station.
(6) The first attempt to send a status change signal shall use the primary channel.

Exception: Where the primary channel is known to have failed.

(7) Simultaneous transmission over both channels shall be permitted.
(8) Failure of telephone lines (numbers) or cellular service shall be annunciated locally.

8.6.3.2.1.5 DACT Transmission Means. The following requirements shall apply to all digital alarm communications transmitters:

(1) A DACT shall be connected to two separate means of transmission at the protected premises.
(2) The DACT shall be capable of selecting the operable means of transmission in the event of failure of the other means.
(3) The primary means of transmission shall be a telephone line (number) connected to the public switched network.
(4) The first transmission attempt shall utilize the primary means of transmission.
(5) Each DACT shall be programmed to call a second DACR line (number) when the signal transmission sequence to the first called line (number) is unsuccessful.
(6) Each DACT shall automatically initiate and complete a test signal transmission sequence to its associated DACR at least once every 24 hours. A successful signal transmission sequence of any other type within the same 24-hour period shall fulfill the requirement to verify the integrity of the reporting system, provided signal processing is automated so that 24-hour delinquencies are individually acknowledged by supervising station personnel.
(7)*If a DACT is programmed to call a telephone line (number) that is call forwarded to the line (number) of the DACR, a means shall be implemented to verify the integrity of the call forwarding feature every 4 hours.

8.6.3.2.2 Digital Alarm Communicator Receiver (DACR).

8.6.3.2.2.1 Equipment.

(A) Spare DACRs shall be provided in the supervising or subsidiary station. The spare DACRs shall be on line or able to be switched into the place of a failed unit within 30 seconds after detection of failure.

(B) One spare DACR shall be permitted to serve as a backup for up to five DACRs in use.

(C) The number of incoming telephone lines to a DACR shall be limited to eight lines unless the signal receiving, processing, display, and recording equipment at the supervising or subsidiary station is duplicated and a switchover is able to be accomplished in less than 30 seconds with no loss of signal during this period, in which case the number of incoming lines to the unit shall be permitted to be unlimited.

8.6.3.2.2.2 Transmission Channels.

(A)* The DACR equipment at the supervising or subsidiary station shall be connected to a minimum of two separate incoming telephone lines (numbers). The lines (numbers) shall have the following characteristics:

(1) If the lines (numbers) are in a single hunt group, they shall be individually accessible; otherwise, separate hunt groups shall be required.
(2) The lines (numbers) shall be used for no other purpose than receiving signals from a DACT.
(3) The lines (numbers) shall be unlisted.

(B) The failure of any telephone line (number) connected to a DACR due to loss of line voltage shall be annunciated visually and audibly in the supervising station.

(C)* The loading capacity for a hunt group shall be in accordance with Table 8.6.3.2.2.2 or be capable of demonstrating a 90 percent probability of immediately answering an incoming call.

(1) Table 8.6.3.2.2.2 shall be based on an average distribution of calls and an average connected time of 30 seconds for a message.
(2) The loading figures in Table 8.6.3.2.2.2 shall presume that the lines are in a hunt group (i.e., DACT is able to access any line not in use).
(3) A single-line DACR shall not be allowed for any of the configurations shown in Table 8.6.3.2.2.2.

Copyright National Fire Protection Association
Provided by IHS under license with NFPA
No reproduction or networking permitted without license from IHS
Not for Resale

(D) Each supervised burglar alarm (open/close) or each suppressed guard's tour transmitter shall reduce the allowable DACTs as follows:

(1) Up to a four-line hunt group, by 10
(2) Up to a five-line hunt group, by 7
(3) Up to a six-line hunt group, by 6
(4) Up to a seven-line hunt group, by 5
(5) Up to an eight-line hunt group, by 4

(E) Each guard's tour transmitter shall reduce the allowable DACTs as follows:

(1) Up to a four-line hunt group, by 30
(2) Up to a five-line hunt group, by 21
(3) Up to a six-line hunt group, by 18
(4) Up to a seven-line hunt group, by 15
(5) Up to an eight-line hunt group, by 12

(F)* A signal shall be received on each individual incoming DACR line at least once every 24 hours.

(G) The failure to receive a test signal from the protected premises shall be treated as a trouble signal.

Table 8.6.3.2.2.2 Loading Capacities for Hunt Groups

System Loading at the Supervising Station	Number of Lines in Hunt Group				
	1	2	3	4	5–8
With DACR lines processed in parallel					
Number of initiating circuits	NA	5,000	10,000	20,000	20,000
Number of DACTs	NA	500	1,500	3,000	3,000
With DACR lines processed serially (put on hold, then answered one at a time)					
Number of initiating circuits	NA	3,000	5,000	6,000	6,000
Number of DACTs	NA	300	800	1,000	1,000

NA: Not allowed.

8.6.3.2.3 Digital Alarm Radio System (DARS).

8.6.3.2.3.1 General Requirements.

(A) If any DACT signal transmission is unsuccessful, the information shall be transmitted by means of the digital alarm radio transmitter (DART).

(B) The DACT shall continue its transmission sequence as required by 8.6.3.2.3.1(C).

(C) The DARS shall be capable of demonstrating a minimum of 90 percent probability of successfully completing each transmission sequence.

(D) Transmission sequences shall be repeated a minimum of five times. The DART transmission shall be permitted to be terminated in less than five sequences if the DACT successfully communicates to the DACR.

(E) Each DART shall automatically initiate and complete a test signal transmission sequence to its associated digital alarm radio receiver (DARR) at least once every 24 hours. A successful DART signal transmission sequence of any other type within the same 24-hour period shall fulfill the requirement to test the integrity of the reporting system, provided signal processing is automated so that 24-hour delinquencies are individually acknowledged by supervising station personnel.

8.6.3.2.3.2 Digital Alarm Radio Transmitter (DART). A DART shall transmit a digital code or another approved signal by use of radio transmission to its associated digital alarm radio receiver (DARR).

(A) Signal repetition, digital parity check, or another approved means of signal verification shall be used.

(B) The DART shall comply with applicable FCC rules consistent with its operating frequency.

8.6.3.2.3.3 Digital Alarm Radio Receiver (DARR) Equipment.

(A) A spare DARR shall be provided in the supervising station and shall be able to be switched into the place of a failed unit within 30 seconds after detection of failure.

(B) Facilities shall be provided at the supervising station for supervisory and control functions of subsidiary and repeater station radio-receiving equipment. This shall be accomplished via a supervised circuit where the radio equipment is remotely located from the supervising or subsidiary station. The following conditions shall be supervised at the supervising station:

(1) Failure of ac power supplying the radio equipment
(2) Malfunction of receiver
(3) Malfunction of antenna and interconnecting cable
(4) Indication of automatic switchover of the DARR
(5) Malfunction of data transmission line between the DARR and the supervising or subsidiary station

8.6.3.3 McCulloh Systems.

8.6.3.3.1 Transmitters.

8.6.3.3.1.1 A coded alarm signal from a transmitter shall consist of not less than three complete rounds of the number or code transmitted.

8.6.3.3.1.2* A coded fire alarm box shall produce not less than three signal impulses for each revolution of the coded signal wheel or another approved device.

8.6.3.3.1.3 Circuit-adjusting means for emergency operating shall be permitted to be either automatic or be provided through manual operation upon receipt of a trouble signal.

8.6.3.3.1.4* Equipment shall be provided at the supervising or subsidiary station on all circuits extending from the supervising or subsidiary station that is utilized for McCulloh systems for performing the following:

(1) Tests on current on each circuit under nontransmitting conditions
(2) Tests on current on each side of the circuit with the receiving equipment conditioned for an open circuit

8.6.3.3.2 Transmission Channels.

8.6.3.3.2.1 Circuits between the protected premises and the supervising or subsidiary station that are essential to the actuation or operation of devices that initiate a signal indicative of fire shall be arranged so that the occurrence of a single break or single ground fault does not prevent transmission of an alarm.

8.6.3.3.2.2 Circuits wholly within the supervising or subsidiary station shall not be required to be arranged in accordance with 8.6.3.3.2.1.

Copyright National Fire Protection Association
Provided by IHS under license with NFPA
No reproduction or networking permitted without license from IHS
Not for Resale

8.6.3.3.2.3 The carrier system portion of circuits shall not be required to be arranged in accordance with 8.6.3.3.2.1.

8.6.3.3.2.4 The occurrence of a single break or a single ground fault on any circuit shall not of itself cause a false signal that is able to be interpreted as an alarm of fire. If such a single fault prevents the functioning of any circuit, its occurrence shall be indicated automatically at the supervising station by a trouble signal that compels attention and that is distinguishable from signals other than those indicative of an abnormal condition of supervised parts of a fire suppression system(s).

8.6.3.3.2.5 The circuits and devices shall be arranged to receive and record a signal identifiable as to location of origin, and provisions shall be made for identifying transmission to the public fire service communications center.

8.6.3.3.2.6 Multipoint transmission channels between the protected premises and the supervising or subsidiary station and within the protected premises, consisting of one or more coded transmitters and an associated system unit(s), shall meet the requirements of either 8.6.3.3.2.7 or 8.6.3.3.2.8.

8.6.3.3.2.7 If end-to-end metallic continuity is present, signals shall be received from other points under any one of the following transmission channel fault conditions at one point on the line:

(1) Open
(2) Ground
(3)*Wire-to-wire short
(4) Open and ground

8.6.3.3.2.8 If end-to-end metallic continuity is not present, the nonmetallic portion of transmission channels shall meet all of the following requirements:

(1) Two nonmetallic channels or one channel plus a means for immediate transfer to a standby channel shall be provided for each transmission channel, with a maximum of eight transmission channels being associated with each standby channel, or shall be furnished over one channel, provided that service is limited to one plant.
(2) The two nonmetallic channels (or one channel with standby arrangement) for each transmission channel shall be provided by one of the following means, shown in descending order of preference:
    (a) Over separate facilities and separate routes
    (b) Over separate facilities in the same route
    (c) Over the same facilities in the same route
(3) Failure of a nonmetallic channel or any portion thereof shall be indicated immediately and automatically in the supervising station.
(4) Signals shall be received from other points under any one of the following fault conditions at one point on the metallic portion of the transmission channel:
    (a) Open
    (b) Ground
    (c)*Wire-to-wire short

8.6.3.3.3 Loading Capacity of McCulloh Circuits.

8.6.3.3.3.1 The number of transmitters connected to any transmission channel shall be limited to eliminate interference.

8.6.3.3.3.2 The total number of code wheels or other approved devices connected to a single transmission channel shall not exceed 250.

8.6.3.3.3.3 Alarm signal transmission channels shall be reserved exclusively for fire alarm signal transmitting service unless the transmission channels meet the requirements of 8.6.3.3.3.6.

8.6.3.3.3.4 The number of waterflow switches permitted to be connected to actuate a single transmitter shall not exceed five switches.

8.6.3.3.3.5 The number of supervisory switches permitted to be connected to actuate a single transmitter shall not exceed 20 switches.

8.6.3.3.3.6 Combined alarm and supervisory transmission channels shall comply with the following:

(1) If both sprinkler supervisory signals and fire or waterflow alarm signals are transmitted over the same transmission channel, provision shall be made to obtain either alarm signal precedence or continuous repetition of the alarm signal to prevent the loss of any alarm signal.
(2) Other signal transmitters (e.g., burglar, industrial processes) on an alarm transmission channel shall not exceed five.

8.6.3.3.3.7* If signals from manual fire alarm boxes and waterflow alarm transmitters within a building are transmitted over the same transmission channel and are operating at the same time, there shall be no interference with the fire box signals. Provision of the shunt noninterfering method of operation shall be permitted for this performance.

8.6.3.3.3.8 One alarm transmission channel shall serve not more than 25 plants.

(A) A plant shall be permitted to consist of one or more buildings under the same ownership, and the circuit arrangement shall be such that an alarm signal cannot be received from more than one transmitter at a time within a plant.

(B) If such noninterference is not provided, each building shall be a plant.

8.6.3.3.3.9 One sprinkler supervisory transmission channel circuit shall serve not more than 25 plants. A plant shall be permitted to consist of one or more buildings under the same ownership.

8.6.3.3.3.10 Connections to a guard supervisory transmission channel or to a combination manual fire alarm and guard transmission channel shall be limited so that not more than 60 scheduled guard report signals are transmitted in any 1-hour period. Patrol scheduling shall be such as to eliminate interference between guard report signals.

8.6.3.3.4* Unless accepted by the authority having jurisdiction, McCulloh systems shall not be permitted to be installed after June 30, 2003.

8.6.3.4 Two-Way Radio Frequency (RF) Multiplex Systems.

8.6.3.4.1 Maximum Operating Time. The maximum end-to-end operating time parameters allowed for a two-way RF multiplex system shall be as follows:

(1) The maximum allowable time lapse from the initiation of a single fire alarm signal until it is recorded at the supervising station shall not exceed 90 seconds. When any number of subsequent fire alarm signals occur at any rate, they shall be recorded at a rate no slower than one every additional 10 seconds.

Copyright National Fire Protection Association
Provided by IHS under license with NFPA
No reproduction or networking permitted without license from IHS
Not for Resale

(2) The maximum allowable time lapse from the occurrence of an adverse condition in any transmission channel until recording of the adverse condition is started shall not exceed 200 seconds for Type 4 and Type 5 systems. The requirements of 8.6.3.4.4 shall apply.
(3) In addition to the maximum operating time allowed for fire alarm signals, the requirements of one of the following paragraphs shall be met:
   (a) A system unit that has more than 500 initiating device circuits shall be able to record not less than 50 simultaneous status changes within 90 seconds.
   (b) A system unit that has fewer than 500 initiating device circuits shall be able to record not less than 10 percent of the total number of simultaneous status changes within 90 seconds.

8.6.3.4.2 Supervisory and Control Functions. Facilities shall be provided at the supervising station for the following supervisory and control functions of the supervising or subsidiary station and the repeater station radio transmitting and receiving equipment, which shall be accomplished via a supervised circuit where the radio equipment is remotely located from the system unit:

(1) RF transmitter in use (radiating).
(2) Failure of ac power supplying the radio equipment.
(3) RF receiver malfunction.
(4) Indication of automatic switchover.
(5) Independent deactivation of either RF transmitter shall be controlled from the supervising station.

8.6.3.4.3 Transmission Channel.

8.6.3.4.3.1 The RF multiplex transmission channel shall terminate in an RF transmitter/receiver at the protected premises and in a system unit at the supervising or subsidiary station.

8.6.3.4.3.2 Operation of the transmission channel shall conform to the requirements of this Code whether channels are private facilities, such as microwave, or leased facilities furnished by a communications utility company. If private signal transmission facilities are used, the equipment necessary to transmit signals shall also comply with requirements for duplicate equipment or replacement of critical components, as described in 8.6.5.2.

8.6.3.4.4* Categories. Two-way RF multiplex systems shall be divided into Type 4 or Type 5 classifications based on their ability to perform under adverse conditions.

8.6.3.4.4.1 A Type 4 system shall have two or more control sites configured as follows:

(1) Each site shall have an RF receiver interconnected to the supervising or subsidiary station by a separate channel.
(2) The RF transmitter/receiver located at the protected premises shall be within transmission range of at least two RF receiving sites.
(3) The system shall contain two RF transmitters that are one of the following:
   (a) Located at one site with the capability of interrogating all of the RF transmitters/receivers on the premises
   (b) Dispersed with all of the RF transmitters/receivers on the premises having the capability to be interrogated by two different RF transmitters
(4) Each RF transmitter shall maintain a status that allows immediate use at all times. Facilities shall be provided in the supervising or subsidiary station to operate any offline RF transmitter at least once every 8 hours.
(5) Any failure of one of the RF receivers shall in no way interfere with the operation of the system from the other RF receiver. Failure of any receiver shall be annunciated at the supervising station.
(6) A physically separate channel shall be required between each RF transmitter or RF receiver site, or both, and the system unit.

8.6.3.4.4.2 A Type 5 system shall have a single control site configured as follows:

(1) A minimum of one RF receiving site
(2) A minimum of one RF transmitting site

8.6.3.4.5 Loading Capacities.

8.6.3.4.5.1 The loading capacities of two-way RF multiplex systems shall be based on the overall reliability of the signal receiving, processing, display, and recording equipment at the supervising or subsidiary station and the capability to transmit signals during adverse conditions of the transmission channels.

8.6.3.4.5.2 Allowable loading capacities shall comply with Table 8.6.3.4.5.2.

Table 8.6.3.4.5.2 Loading Capacities for Two-Way RF Multiplex Systems

	System Type	
Trunks	**Type 4**	**Type 5**
Maximum number of fire alarm service initiating device circuits per primary trunk facility	5,120	1,280
Maximum number of leg facilities for fire alarm service per primary trunk facility	512	128
Maximum number of leg facilities for all types of fire alarm service per secondary trunk facility*	128	128
Maximum number of all types of initiating device circuits per primary trunk facility in any combination	10,240	2,560
Maximum number of leg facilities for types of fire alarm service per primary trunk facility in any combination*	1,024	256
System Units at the Supervising Station		
Maximum number of all types of initiating device circuits per system unit*	10,240	10,240
Maximum number of fire protected buildings and premises per system unit	512	512
Maximum number of fire alarm service initiating device circuits per system	5,120	5,120
Systems Emitting from Subsidiary Station†	—	—

*Includes every initiating device circuit (e.g., waterflow, fire alarm, supervisory, guard, burglary, hold-up).
†Same as system units at the supervising station.

Copyright National Fire Protection Association
Provided by IHS under license with NFPA
No reproduction or networking permitted without license from IHS
Not for Resale

8.6.3.4.5.3 The capacity of a system unit shall be permitted to be unlimited if the signal receiving, processing, display, and recording equipment are duplicated at the supervising station and a switchover is able to be accomplished in not more than 30 seconds with no loss of signals during this period.

8.6.3.5 One-Way Private Radio Alarm Systems.

8.6.3.5.1 Independent Receivers. The requirements of 8.5.3.5 for a radio alarm repeater station receiver (RARSR) shall be satisfied if the signals from each radio alarm transmitter (RAT) are received and supervised, in accordance with Chapter 8, by at least two independently powered, independently operating, and separately located RARSRs or radio alarm supervising station receivers (RASSRs), or by one of each. At least two separate paths shall be provided from a RAT to the ultimate RASSR.

8.6.3.5.2* Maximum Operating Time. The end-to-end operating time parameters allowed for a one-way radio alarm system shall be as follows:

(1) There shall be a 90 percent probability that the time between the initiation of a single fire alarm signal until it is recorded at the supervising station will not exceed 90 seconds.
(2) There shall be a 99 percent probability that the time between the initiation of a single fire alarm signal until it is recorded at the supervising station will not exceed 180 seconds.
(3) There shall be a 99.999 percent probability that the time between the initiation of a single fire alarm signal until it is recorded at the supervising station will not exceed 7.5 minutes (450 seconds), at which time the RAT shall cease transmitting. When any number of subsequent fire alarm signals occur at any rate, they shall be recorded at an average rate no slower than one every additional 10 seconds.
(4) In addition to the maximum operating time allowed for fire signals, the system shall be able to record not less than 12 simultaneous status changes within 90 seconds at the supervising station.

8.6.3.5.3 Supervision. Equipment shall be provided at the supervising station for the supervisory and control functions of the supervising or subsidiary station and for the repeater station radio transmitting and receiving equipment. This shall be accomplished via a supervised circuit where the radio equipment is remotely located from the system unit.

8.6.3.5.3.1 The following conditions shall be supervised at the supervising station:

(1) Failure of ac power supplying the radio equipment
(2) Malfunction of RF receiver
(3) Indication of automatic switchover, if applicable

8.6.3.5.3.2 Interconnections between elements of transmitting equipment, including any antennas, shall be supervised either to cause an indication of failure at the protected premises or to transmit a trouble signal to the supervising station.

8.6.3.5.3.3 If elements of transmitting equipment are physically separated, the wiring or cabling between them shall be protected by conduit.

8.6.3.5.3.4 Personnel shall be dispatched to arrive within 12 hours to initiate maintenance after detection of primary power failure.

8.6.3.5.4 Transmission Channels.

8.6.3.5.4.1 The one-way RF transmission channel shall originate with a RAT at the protected premises and shall terminate at the RF receiving system of an RARSR or RASSR capable of receiving transmissions from such transmitting devices.

8.6.3.5.4.2 A receiving network transmission channel shall terminate at an RARSR at one end and with either another RARSR or an RASSR at the other end.

8.6.3.5.4.3 Operation of receiving network transmission channels shall conform to the requirements of this Code whether channels are private facilities, such as microwave, or leased facilities furnished by a communications utility company.

8.6.3.5.4.4 If private signal transmission facilities are used, the equipment necessary to transmit signals shall also comply with requirements for duplicate equipment or replacement of critical components as described in 8.6.5.2.

8.6.3.5.4.5 The system shall provide information that indicates the quality of the received signal for each RARSR supervising each RAT in accordance with 8.6.3.5 and shall provide information at the supervising station when such signal quality falls below the minimum signal quality levels set forth in 8.6.3.5.

8.6.3.5.4.6 Each RAT shall be installed in such a manner so as to provide a signal quality over at least two independent one-way RF transmission channels, of the minimum quality level specified, that satisfies the performance requirements in 8.6.2.4 and 8.6.5.

8.6.3.5.5 System Categories. One-way radio alarm systems shall be divided into two categories on the basis of the following number of RASSRs present in the system:

(1) A Type 6 system shall have one RASSR and at least two RARSRs.
(2) A Type 7 system shall have more than one RASSR and at least two RARSRs.
(3) In a Type 7 system, when more than one RARSR is out of service and, as a result, any RATs are no longer being supervised, the affected supervising station shall be notified.
(4) In a Type 6 system, when any RARSR is out of service, a trouble signal shall be annunciated at the supervising station.

8.6.3.5.6 Loading Capacities. The loading capacities of one-way radio alarm systems shall be based on the overall reliability of the signal receiving, processing, display, and recording equipment at the supervising or subsidiary station and the capability to transmit signals during adverse conditions of the transmission channels.

8.6.3.5.6.1 Allowable loading capacities shall be in accordance with Table 8.6.3.5.6.1.

(A) Each guard's tour transmitter shall reduce the allowable RATs by 15.

(B) Each two-way protected premises radio transmitter shall reduce the allowable RATs by two.

(C) Each supervised burglar alarm (open/close) or each suppressed guard's tour transmitter shall reduce the allowable RATs by five.

8.6.3.5.6.2 If the signal receiving, processing, display, and recording equipment is duplicated at the supervising station and a switchover is able to be accomplished in not more than 30 seconds with no loss of signals during this period, the capacity of a system unit shall be permitted to be unlimited.

--`,,```,,,,````-`-`,,`,,`,`,,`---
Copyright National Fire Protection Association
Provided by IHS under license with NFPA
No reproduction or networking permitted without license from IHS
Not for Resale

Table 8.6.3.5.6.1 Loading Capacities of One-Way Radio Alarm Systems

Radio Alarm Repeater Station Receiver (RARSR)	System Type	
	Type 6	Type 7
Maximum number of fire alarm service initiating device circuits per RARSR	5,120	5,120
Maximum number of RATs for fire	512	512
Maximum number of all types of initiating device circuits per RARSR in any combination*	10,240	10,240
Maximum number of RATs for all types of fire alarm service per RARSR in any combination*	1,024	1,024
System Units at the Supervising Station		
Maximum number of all types of initiating device circuits per system unit*	10,240	10,240
Maximum number of fire-protected buildings and premises per system unit	512	512
Maximum number of fire alarm service initiating device circuits per system unit	5,120	5,120

*Includes every initiating device circuit (e.g., waterflow, fire alarm, supervisory, guard, burglary, hold-up).

8.6.3.6 Directly Connected Noncoded Systems.

8.6.3.6.1 Circuits. Circuits for transmission of alarm signals between the fire alarm control unit or the transmitter in the protected premises and the supervising station shall be arranged to comply with either (1) or (2):

(1) These circuits shall be arranged so that the occurrence of a single break or single ground fault does not prevent the transmission of an alarm signal. Circuits complying with this paragraph shall be automatically self-adjusting in the event of either a single break or a single ground fault and shall be automatically self-restoring in the event that the break or fault is corrected.
(2) These circuits shall be arranged so that they are isolated from ground (except for reference ground detection) and so that a single ground fault does not prevent the transmission of an alarm signal. Circuits complying with this paragraph shall be provided with a ground reference circuit so as to detect and indicate automatically the existence of a single ground fault.

8.6.3.6.1.1 Additional Requirements. In addition, these circuits shall comply with all of the following requirements:

(1) A multiple ground-fault condition that would prevent alarm operation shall be indicated by an alarm or by a trouble signal.
(2) Circuits for transmission of supervisory signals shall be separate from alarm circuits.
(3) The occurrence of a single break or a single ground fault on any circuit shall not of itself cause a false signal that is able to be interpreted as an alarm of fire.

8.6.3.6.1.2 Exclusions. The requirements of this section shall not apply to the following circuits:

(1) Circuits wholly within the supervising station
(2) Circuits wholly within the protected premises extending from one or more automatic fire detectors or other noncoded initiating devices other than waterflow devices to a transmitter or fire alarm control unit
(3) Power supply leads wholly within the building or buildings protected

8.6.3.6.2 Loading Capacity of Circuits.

8.6.3.6.2.1 The number of initiating devices connected to any signaling circuit and the number of plants that shall be permitted to be served by a signal circuit shall be determined by the authority having jurisdiction and shall not exceed the limitations specified in this subsection.

8.6.3.6.2.2 A plant shall be permitted to consist of one or more buildings under the same ownership.

8.6.3.6.2.3* A single circuit shall not serve more than one plant.

8.6.3.7 Private Microwave Radio Systems.

8.6.3.7.1* If a private microwave radio is used as the transmission channel and communications channel, supervised transmitting and receiving equipment shall be provided at supervising, subsidiary, and repeater stations.

8.6.3.7.2 If more than five protected buildings or premises or 50 initiating devices or initiating device circuits are being serviced by a private radio carrier, the supervising, subsidiary, and repeater station radio facilities shall meet all of the following criteria:

(1) Dual supervised transmitters, arranged for automatic switching from one to the other in case of trouble, shall be installed.
(2) If the transmitters are located where someone is always on duty, switchboard facilities shall be permitted to be manually operated, provided the switching is able to be carried out within 30 seconds.
(3) If the transmitters are located where no one is continuously on duty, the circuit extending between the supervising station and the transmitters shall be a supervised circuit.
(4)*Transmitters shall be operated on a time ratio of 2:1 within each 24 hours.
(5) Dual receivers shall be installed with a means for selecting a usable output from one of the two receivers.
(6) The failure of one receiver shall in no way interfere with the operation of the other receiver, and failure of either receiver shall be annunciated.

8.6.3.7.3 Means shall be provided at the supervising station for the supervision and control of supervising, subsidiary, and repeater station radio transmitting and receiving equipment. If the radio equipment is remote from the supervising station, this shall be accomplished via a supervised circuit.

8.6.3.7.3.1 The following conditions shall be supervised at the supervising station:

(1) Transmitter in use (radiating)
(2) Failure of ac power supplying the radio equipment
(3) Receiver malfunction
(4) Indication of automatic switchover

Copyright National Fire Protection Association
Provided by IHS under license with NFPA
No reproduction or networking permitted without license from IHS
Not for Resale

8.6.3.7.3.2 It shall be possible to independently deactivate either transmitter from the supervising station.

8.6.4 Other Transmission Technologies.

8.6.4.1 Conformance. Other transmission technologies shall include those transmission technologies that operate on principles different from specific transmission technologies covered by this chapter and shall be permitted to be installed if they conform to the requirements of this subsection and to all other applicable requirements of this Code.

8.6.4.2 Federal Communications Commission. Fire alarm system equipment and installations shall comply with the Federal Communications Commission (FCC) rules and regulations, as applicable, concerning electromagnetic radiation, use of radio frequencies, and connections to the public switched telephone network of telephone equipment, systems, and protection apparatus.

8.6.4.3 ***National Electrical Code.*** Equipment shall be installed in compliance with NFPA 70, *National Electrical Code*.

8.6.4.4 Communications Integrity. Provision shall be made to monitor the integrity of the transmission technology and its communications path. The following requirements shall apply:

(1) Any failure shall be annunciated at the supervising station within 5 minutes of the failure.
(2) If communications cannot be established with the supervising station, an indication of this failure to communicate shall be annunciated at the protected premises.
(3) If a portion of the communications path cannot be monitored for integrity, a redundant communications path shall be provided.
(4) Provision shall be made to monitor the integrity of the redundant communications path.
(5) Failure of both the primary and redundant communications paths shall be annunciated at the supervising station within not more than 24 hours of the failure.
(6) System units at the supervising station shall be restored to service within 30 minutes of a failure.
(7) The transmission technology shall be designed so that upon failure of a transmission channel serving a system unit at the supervising station, the loss of the ability to monitor shall not affect more than 3000 transmitters.

8.6.4.5 Spare System Unit Equipment. An inventory of spare equipment shall be maintained at the supervising station such that any failed piece of equipment can be replaced and the systems unit restored to full operation within the time limitations specified in this Code.

8.6.4.6 Loading Capacity of a System Unit.

8.6.4.6.1 The maximum number of independent fire alarm systems connected to a single system unit shall be limited to 512.

8.6.4.6.2 If duplicate spare system units are maintained at the supervising station and switchover can be achieved in 30 seconds, then the system capacity shall be unlimited.

8.6.4.7 End-to-End Communication Time for an Alarm. The maximum duration between the initiation of an alarm signal at the protected premises, transmission of the signal, and subsequent display and recording of the alarm signal at the supervising station shall not exceed 90 seconds.

8.6.4.8 Unique Identifier. If a transmitter shares a transmission or communications channel with other transmitters, it shall have a unique transmitter identifier.

8.6.4.9 Recording and Display Rate of Subsequent Alarms. Recording and display of alarms at the supervising station shall be at a rate no slower than one complete signal every 10 seconds.

8.6.4.10 Signal Error Detection and Correction.

8.6.4.10.1 Communication of alarm, supervisory, and trouble signals shall be in a highly reliable manner to prevent degradation of the signal in transit, which in turn would result in either of the following:

(1) Failure of the signal to be displayed and recorded at the supervising station
(2) An incorrect corrupted signal displayed and recorded at the supervising station

8.6.4.10.2 Reliability of the signal shall be achieved by any of the following:

(1) Signal repetition — multiple transmissions repeating the same signal
(2) Parity check — a mathematically check sum algorithm of a digital message that verifies correlation between transmitted and received message
(3) An equivalent means to 8.6.4.10.2(1) or 8.6.4.10.2(2) that provides a certainty of 99.99 percent that the received message is identical to the transmitted message

8.6.4.11* Signal Priority. If the communications methodology is shared with any other usage, all fire alarm, supervisory, and trouble signals shall take precedence, in that respective order of priority, over all other signals unless otherwise permitted by the authority having jurisdiction.

Exception: If an order of signal priority cannot be assured, then the maximum duration between the initiation of an alarm signal at the protected premises, transmission of the signal, and subsequent display and recording of the alarm signal at the supervising station shall not exceed 90 seconds.

8.6.4.12 Sharing Communications Equipment On-Premises. If the fire alarm transmitter is sharing on-premises communications equipment, the shared equipment shall be listed for the purpose. If on-premises communications equipment is not listed for the purpose, the fire alarm transmitter shall be installed ahead of the unlisted communications equipment.

8.6.4.13 Service Provider Diversity. When a redundant path is required, both paths shall be private or the alternate path shall be provided by a public communications service provider different from the primary path, if available.

8.6.4.14 Throughput Probability. hen the supervising station does not regularly communicate with the transmitter at least once every 200 seconds, then the throughput probability of the alarm transmission shall be at least 90 percent in 90 seconds, 99 percent in 180 seconds, or 99.999 percent in 450 seconds.

8.6.4.15 Unique Flaws Not Covered by This Code. If a communications technology has a unique flaw that could result in the failure to communicate a signal, the implementation of that technology for fire alarm signaling shall compensate for that flaw so as to eliminate the risk of missing a fire alarm signal.

8.6.5 Display and Recording Requirements for All Transmission Technologies.

8.6.5.1* Any status changes, including the initiation or restoration to normal of a trouble condition, that occur in an initiating device or in any interconnecting circuits or equipment,

Copyright National Fire Protection Association
Provided by IHS under license with NFPA
No reproduction or networking permitted without license from IHS
Not for Resale

including the local protected premises controls from the location of the initiating device(s) to the supervising station, shall be presented in a form to expedite prompt operator interpretation. Status change signals shall provide the following information:

(1) Identification of the type of signal to show whether it is an alarm, supervisory, delinquency, or trouble signal
(2) Identification of the signal to differentiate between an initiation of an alarm, supervisory, delinquency, or trouble signal and a clearing from one or more of these conditions
(3) Identification of the point of origin of each status change signal

8.6.5.2* If duplicate equipment for signal receiving, processing, display, and recording is not provided, the installed equipment shall be designed so that any critical assembly is able to be replaced from on-premises spares and the system is able to be restored to service within 30 minutes. A critical assembly shall be an assembly in which a malfunction prevents the receipt and interpretation of signals by the supervising station operator.

Exception: Proprietary and remote station systems.

8.6.5.3* Any method of recording and display or indication of change of status signals shall be permitted, provided all of the following conditions are met:

(1) Each change of status signal requiring action to be taken by the operator shall result in an audible signal and not less than two independent methods of identifying the type, condition, and location of the status change.
(2) Each change of status signal shall be automatically recorded. The record shall provide the type of signal, condition, and location as required by 8.6.5.1 in addition to the time and date the signal was received.
(3) Failure of an operator to acknowledge or act upon a change of status signal shall not prevent subsequent alarm signals from being received, indicated or displayed, and recorded.
(4) Change of status signals requiring action to be taken by the operator shall be displayed or indicated in a manner that clearly differentiates them from those that have been acted upon and acknowledged.
(5) Each incoming signal to a DACR or DARR shall cause an audible signal that persists until manually acknowledged.

Exception: Test signals required by 8.6.3.2.1.5(6) received at a DACR or a DARR.

8.6.6 Testing and Maintenance Requirements for All Transmission Technologies. Testing and maintenance of communications methods shall be in accordance with the requirements of Chapter 10.

8.7 Mass Notification Systems. See Annex E.

Chapter 9 Public Fire Alarm Reporting Systems

9.1 Application.

9.1.1 The installation and use of public fire alarm reporting systems and auxiliary fire alarm systems shall comply with the requirements of this chapter.

9.1.2 The requirements of this chapter shall apply to systems and equipment for the transmission and reception of fire alarm and other emergency signals, including those from auxiliary fire alarm systems, connected to the public fire alarm reporting system.

9.1.3 The requirements of Chapter 4 and Chapter 10 shall also apply unless they are in conflict with this chapter.

9.1.4 The requirements of this chapter shall not apply to Chapter 11 unless otherwise noted.

9.1.5 The application of public fire alarm reporting systems and auxiliary fire alarm systems to provide defined reporting functions from or within private premises shall be permitted where approved by the authority having jurisdiction.

9.2 General Fundamentals.

9.2.1* Public fire alarm reporting systems shall be designed, installed, operated, and maintained in accordance with this chapter to provide reliable transmission and receipt of fire alarms in a manner acceptable to the authority having jurisdiction.

9.2.2 A public fire alarm reporting system, as described herein, shall be permitted to be used for the transmission of other signals or calls of a public emergency nature, provided such transmission does not interfere with the transmission and receipt of fire alarms.

9.2.3 Fiber optic cabling shall be considered an acceptable transmission medium, provided that the cabling and installation comply with the requirements of Section 9.7 and the conversion equipment used to interface to the fiber optic signal complies with all applicable requirements of Chapter 9.

9.2.4 All devices shall be designed to function satisfactorily under the climatic conditions to which they may be exposed.

9.3 Management and Maintenance.

9.3.1 All systems shall be under the control of a designated jurisdictional employee.

9.3.2 Maintenance by an organization or person other than from the jurisdiction or an employee of the jurisdiction shall be by written contract, guaranteeing performance acceptable to the authority having jurisdiction.

9.3.3 Where maintenance is provided by an organization or person(s) other than the jurisdiction or its employees, complete written records of the installation, maintenance, test, and extension of the system shall be forwarded to the designated employee as soon as possible.

9.3.4 All equipment shall be accessible to the authority having jurisdiction for the purpose of maintenance.

9.3.5 Records of wired public fire alarm reporting system circuits shall include the following:

(1) Outline plans showing terminals and box sequence
(2) Diagrams of applicable office wiring
(3) List of materials used, including trade name, manufacturer, and year of purchase or installation

9.3.6 Public fire alarm reporting systems as defined in this chapter shall, in their entirety, be subject to a complete operational acceptance test upon completion of system installation.

9.3.6.1 This test(s) shall be made in accordance with the requirements of the authority having jurisdiction; however, in no case shall the operational functions tested be less than those stipulated in Chapter 10.

Copyright National Fire Protection Association
Provided by IHS under license with NFPA
No reproduction or networking permitted without license from IHS
Not for Resale

9.3.6.2 Acceptance tests shall also be performed on any alarm-reporting devices as identified in this chapter that are added subsequent to the installation of the initial system.

9.3.7 Personnel Qualification.

9.3.7.1 System Designer.

9.3.7.1.1 Public fire alarm reporting system plans and specifications shall be developed in accordance with this Code by persons who are qualified in the proper design, application, installation, and testing of public fire alarm reporting systems.

9.3.7.1.2 The system designer shall be identified on the system design documents.

9.3.7.2 System Installer. Installation personnel shall be qualified in the installation, inspection, and testing of public fire alarm reporting systems.

9.3.7.3 Service Personnel. Service personnel shall be qualified in the service, inspection, maintenance, and testing of public fire alarm reporting systems.

9.3.7.4 Qualification.

9.3.7.4.1 Personnel shall demonstrate qualification by being trained and certified in public fire alarm reporting system design, installation, or service (as appropriate) by one or more of the following:

(1) Certified by the manufacturer of the system or equipment
(2)*Certified by an organization acceptable to the authority having jurisdiction
(3) Licensed or certified by a state or local authority

9.3.7.4.2 Evidence of qualifications and/or certification shall be provided when requested by the authority having jurisdiction. A license or qualification listing shall be current in accordance with the requirements of the issuing authority or organization.

9.4 Alarm Transmission Equipment (Publicly Accessible Fire Alarm Boxes, Auxiliary Boxes, and Master Boxes).

9.4.1 General. The requirements of 9.4.1.1 through 9.4.1.5 shall apply to all alarm transmission equipment.

9.4.1.1 Concurrent operation of at least four boxes shall not result in the loss of an alarm.

9.4.1.2 Boxes, when in an abnormal condition, shall leave the circuit usable.

9.4.1.3 Boxes shall be designed so that recycling does not occur when a box-actuating device is held in the actuating position and shall be ready to accept a new signal as soon as the actuating device is released.

9.4.1.4* Boxes, when actuated, shall give a visible or audible indication to the user that the box is operating or that the signal has been transmitted to the public fire service communications center.

9.4.1.5 Box cases and parts that are accessible to the public shall be of insulating materials or permanently and effectively grounded. All ground connections to boxes shall comply with the requirements of NFPA 70, *National Electrical Code*, Article 250.

9.4.2* Publicly Accessible Fire Alarm Boxes.

9.4.2.1 Fundamental Requirements. The requirements of 9.4.2.1.1 through 9.4.2.1.11 shall apply to all publicly accessible fire alarm boxes.

9.4.2.1.1 Means for actuation of alarms by the public shall be located where they are conspicuous and accessible for operation.

9.4.2.1.2 The box housing shall protect the internal components from the weather.

9.4.2.1.3 Doors on boxes shall remain operable under adverse climatic conditions, including icing and salt spray.

9.4.2.1.4 Boxes shall be recognizable as such and shall have instructions for use plainly marked on their exterior surfaces.

9.4.2.1.5 Boxes shall be securely mounted on poles, pedestals, or structural surfaces as directed by the authority having jurisdiction.

9.4.2.1.6* The location of publicly accessible boxes shall be designated by the authority having jurisdiction.

9.4.2.1.7 Schools, hospitals, nursing homes, and places of public assembly shall have a box located at the main entrance, as directed by the authority having jurisdiction.

9.4.2.1.8 Boxes shall be conspicuously visible and be highlighted with a distinctive color.

9.4.2.1.9 All publicly accessible boxes mounted on support poles shall be identified by a wide band of distinctive colors or signs placed 2.44 m (8 ft) above the ground and visible from all directions wherever possible.

9.4.2.1.10* Location-designating lights of distinctive color, visible for at least 460 m (1500 ft) in all directions, shall be installed over boxes. The street light nearest the box, where equipped with a distinctively colored light, shall meet this requirement.

9.4.2.1.11 Where boxes are installed inside a structure, the installation shall comply with 9.4.2.1.11.1 and 9.4.2.1.11.2.

9.4.2.1.11.1 The box shall be placed as close as is practicable to the point of entrance of the circuit.

9.4.2.1.11.2 The exterior wire shall be installed in rigid metal conduit or intermediate metal conduit in accordance with Chapter 3 of NFPA 70, *National Electrical Code*.

Exception: Schedule 80 rigid nonmetallic conduit shall be permitted for underground installations, provided all elbows used are rigid or intermediate metal conduit.

9.4.2.2 Coded Wired Boxes. The requirements of Section 9.7 shall also apply.

9.4.2.3 Coded Radio Boxes.

9.4.2.3.1 In addition to the requirements of this Code, coded radio boxes shall be designed and operated in compliance with all applicable rules and regulations of the Federal Communications Commission (FCC) or, where required, the National Telecommunications and Information Administration (NTIA).

9.4.2.3.2* Each coded radio box shall automatically transmit a test message at least once in each 24-hour period.

9.4.2.3.3 Coded radio boxes shall provide no less than three specific and individually identifiable functions to the public fire service communications center, in addition to the box number, as follows:

(1) Test
(2) Tamper
(3) Fire

Copyright National Fire Protection Association
Provided by IHS under license with NFPA
No reproduction or networking permitted without license from IHS
Not for Resale

9.4.2.3.4 Coded radio boxes shall transmit to the public fire service communications center as follows:

(1) No less than one repetition for "test"
(2) No less than one repetition for "tamper"
(3) No less than two repetitions for "fire"

9.4.2.3.5 Where multifunction-coded radio boxes are used to transmit signals in addition to those in 9.4.2.3.3, each such additional signal shall be individually identifiable.

9.4.2.3.6 Multifunction-coded radio boxes shall be designed so as to prevent the loss of supplemental or concurrently actuated messages.

9.4.2.3.7 An actuating device held or locked in the activating position shall not prevent the activation and transmission of other messages.

9.4.2.3.8 The primary power source for coded radio boxes shall be permitted to be from one or more of the following as approved by the authority having jurisdiction:

(1) A utility distribution system
(2) A photovoltaic power system
(3) User power
(4) Self-powered using either an integral battery or other stored energy source

9.4.2.3.9 Boxes powered by a utility distribution system shall comply with 9.4.2.3.9.1 through 9.4.2.3.9.6.

9.4.2.3.9.1 Boxes shall have an integral standby, sealed, rechargeable battery that is capable of powering box functions for at least 60 hours in the event of primary power failure. Transfer to standby battery power shall be automatic and without interruption to box operation.

9.4.2.3.9.2 A local trouble indication shall activate upon primary power failure.

9.4.2.3.9.3 Boxes operating from primary power shall be capable of operation with a dead or disconnected battery.

9.4.2.3.9.4 A battery charger shall be provided in compliance with 4.4.1.8.3, except as modified in 9.4.2.3.9.

9.4.2.3.9.5 When the primary power has failed, boxes shall transmit a power failure message to the public fire service communications center as part of subsequent test messages until primary power is restored.

9.4.2.3.9.6 A low-battery message shall be transmitted to the public fire service communications center where the remaining battery standby time is less than 54 hours.

9.4.2.3.10 Boxes powered by a photovoltaic system shall comply with 9.4.2.3.10.1 through 9.4.2.3.10.5.

9.4.2.3.10.1 Photovoltaic power systems shall provide box operation for not less than 6 months.

9.4.2.3.10.2 Photovoltaic power systems shall be monitored for integrity.

9.4.2.3.10.3 The battery shall have power to sustain operation for a minimum period of 15 days without recharging.

9.4.2.3.10.4 The box shall transmit a trouble message to the public fire service communications center when the charger has failed for more than 24 hours. This message shall be part of all subsequent transmissions.

9.4.2.3.10.5 Where the remaining battery standby duration is less than 10 days, a low-battery message shall be transmitted to the public fire service communications center.

9.4.2.3.11 User-powered boxes shall have an automatic self-test feature.

9.4.2.3.12 Self-powered boxes shall comply with 9.4.2.3.12.1 through 9.4.2.3.12.3.

9.4.2.3.12.1 Self-powered boxes shall operate for a period of not less than 6 months.

9.4.2.3.12.2 Self-powered boxes shall transmit a low-power warning message to the public fire service communications center for at least 15 days prior to the time the power source will fail to operate the box. This message shall be part of all subsequent transmissions.

9.4.2.3.12.3 Use of a charger to extend the life of a self-powered box shall be permitted where the charger does not interfere with box operation. The box shall be capable of operation for not less than 6 months with the charger disconnected.

9.4.2.4 Telephone Boxes. The requirements of Section 9.7 shall also apply.

9.4.2.4.1 Where a handset is used, the caps on the transmitter and receiver shall be secured to reduce the probability of the telephone box being disabled due to vandalism.

9.4.2.4.2 Telephone boxes shall be designed to allow the public fire service communications center operator to determine whether or not the telephone box has been restored to normal condition after use.

9.4.3 Auxiliary Box.

9.4.3.1 Fundamental Requirements. The requirements of 9.4.3.1.1 through 9.4.3.1.5 shall apply to all auxiliary boxes.

9.4.3.1.1 The authority having jurisdiction shall designate the location of the auxiliary box.

9.4.3.1.2 All exterior wire and cable shall be installed in rigid metal conduit or intermediate metal conduit in accordance with Chapter 3 of NFPA 70, *National Electrical Code*.

Exception: Schedule 80 rigid nonmetallic conduit shall be permitted for underground installations, provided all elbows used are rigid or intermediate metal conduit.

9.4.3.1.3 Where installed outside a structure, the requirements of 9.4.2.1.2 and 9.4.2.1.5 shall apply.

9.4.3.1.4 Where the auxiliary box is a coded wired box, the requirements of Section 9.7 shall apply.

9.4.3.1.5 Where the auxiliary box is a coded radio box, the requirements of 9.4.2.3 shall apply.

9.4.3.2 Auxiliary Fire Alarm Systems.

9.4.3.2.1 Application. The equipment and circuits necessary to connect a protected premises to a public fire alarm reporting system shall comply with the requirements of 9.4.3.2.

9.4.3.2.1.1 The requirements of Chapter 5 in addition to those of Chapter 4 and Chapter 10 shall apply to auxiliary fire alarm systems unless they conflict with the requirements of 9.4.3.2.

9.4.3.2.1.2 Where permitted by the authority having jurisdiction, the use of systems described in Chapter 9 shall be permitted to provide defined reporting functions from or within private premises.

Copyright National Fire Protection Association
Provided by IHS under license with NFPA
No reproduction or networking permitted without license from IHS
Not for Resale

9.4.3.2.1.3 The requirements of Section 9.7 shall also apply to coded wired auxiliary fire systems.

9.4.3.2.2 Types of Systems.

9.4.3.2.2.1 Auxiliary fire alarm systems shall be of the following two types:

(1)*Local energy type
- (a) Local energy systems shall be permitted to be of the coded or noncoded type.
- (b) Power supply sources for local energy systems shall conform to Chapter 4.
- (c) Transmitter trouble signals shall be annunciated at the fire command center.

(2)*Shunt type
- (a) Shunt systems shall be noncoded with respect to any remote electrical tripping or actuating devices.
- (b) All conductors of the shunt circuit shall be installed in accordance with NFPA 70, *National Electrical Code*, Article 344, for rigid metal conduit, or Article 358, for electrical metallic tubing.
- (c) Both sides of the shunt circuit shall be in the same conduit.
- (d) Where a shunt loop is used, it shall not exceed a length of 230 m (750 ft) and shall be in conduit.
- (e) Conductors of the shunt circuits shall not be smaller than 14 AWG and shall be insulated as prescribed in NFPA 70, *National Electrical Code*, Article 310.
- (f) The power for shunt-type systems shall be provided by the public fire alarm reporting system.
- (g)*A local system made to an auxiliary system by the addition of a relay whose coil is energized by a local power supply and whose normally closed contacts trip a shunt-type master box shall not be permitted.

9.4.3.2.2.2 The interface of the two types of auxiliary fire alarm systems with the three types of public fire alarm reporting systems shall be in accordance with Table 9.4.3.2.2.2.

Table 9.4.3.2.2.2 Application of Public Fire Alarm Reporting Systems with Auxiliary Fire Alarm Systems

Reporting Systems	Local Energy Type	Shunt Type
Coded wired	Yes	Yes
Coded radio	Yes	No
Telephone series	Yes	No

9.4.3.2.2.3 The application of the two types of auxiliary fire alarm systems shall be limited to the initiating devices specified in Table 9.4.3.2.2.3.

9.4.3.2.3 System Arrangement and Operation.

9.4.3.2.3.1 Shunt-type auxiliary systems shall be arranged so that one auxiliary transmitter does not serve more than 9290 m^2 (100,000 ft^2) total area.

Exception: Where otherwise permitted by the authority having jurisdiction.

Table 9.4.3.2.2.3 Application of Initiating Devices with Auxiliary Fire Alarm Systems

Initiating Devices	Local Energy Type	Shunt Type
Manual fire alarm	Yes	Yes
Waterflow or actuation of the fire extinguishing system(s) or suppression system(s)	Yes	Yes
Automatic detection devices	Yes	No

9.4.3.2.3.2 A separate auxiliary transmitter shall be provided for each building, or where permitted by the authority having jurisdiction, for each group of buildings of single ownership or occupancy.

9.4.3.2.3.3 The same box shall be permitted to be used as a public fire alarm reporting system box and as a transmitting device for an auxiliary system where permitted by the authority having jurisdiction, provided that the box is located at the outside of the entrance to the protected property.

9.4.3.2.3.4 Where 9.4.3.2.3.3 is applied, the fire department shall be permitted to require the box to be equipped with a signal light to differentiate between automatic and manual operation, unless local outside alarms at the protected property serve the same purpose.

9.4.3.2.3.5 The transmitting device shall be located as required by the authority having jurisdiction.

9.4.3.2.3.6 The system shall be designed and arranged so that a single fault on the auxiliary system shall not jeopardize operation of the public fire alarm reporting system and shall not, in case of a single fault on either the auxiliary or public fire alarm reporting system, transmit a false alarm on either system.

Exception: Shunt systems complying with 9.4.3.2.2.1(2).

9.4.3.2.3.7 A means that is available only to the agency responsible for maintaining the public fire alarm reporting system shall be provided for disconnecting the auxiliary loop to the connected property.

9.4.3.2.3.8 Notification shall be given to the designated representative of the property when the auxiliary box is not in service.

9.4.3.2.3.9 An auxiliary fire alarm system shall be used only in connection with a public fire alarm reporting system that is approved for the service. A system approved by the authority having jurisdiction shall meet this requirement.

9.4.3.2.3.10 Permission for the connection of an auxiliary fire alarm system to a public fire alarm reporting system, and acceptance of the type of auxiliary transmitter and its actuating mechanism, circuits, and components connected thereto, shall be obtained from the authority having jurisdiction.

9.4.3.2.3.11 Paragraph 9.4.3.2 shall not require the use of audible alarm signals other than those necessary to operate the auxiliary fire alarm system. Where it is desired to provide fire alarm evacuation signals in the protected property, the alarms, circuits, and controls shall comply with the provisions of Chapter 6 in addition to the provisions of 9.4.3.2.

9.4.3.2.3.12 Multizone auxiliary fire alarm systems shall provide a means for transmitting an alarm to the public reporting system upon the subsequent actuation of initiating devices on

Copyright National Fire Protection Association
Provided by IHS under license with NFPA
No reproduction or networking permitted without license from IHS
Not for Resale

other initiating device circuits or subsequent actuation of addressable initiating devices.

9.4.3.2.3.13 Where an auxiliary transmitter is located within a private premises, it shall be installed in accordance with 9.4.2.1.11 and 9.7.2.

9.4.3.2.3.14 Where data communications between a microprocessor-based fire alarm control unit and an auxiliary fire alarm system are utilized, they shall comply with the requirements of 9.4.3.2.3.14(A) through 9.4.3.2.3.14(C).

(A) The monitoring for integrity shall include communications test messages transmitted between the fire alarm control unit and the auxiliary fire alarm system.

(B) The communications test message shall be initiated by either the fire alarm control unit or the auxiliary fire alarm system and shall require a response from the corresponding unit, and the following shall apply:

(1) An invalid response or no response from the fire alarm control unit or the auxiliary fire alarm system shall be recognized as a communications failure.
(2) A communications failure shall initiate a specific communications failure trouble message, which shall be transmitted from the auxiliary fire alarm system and shall be automatically indicated within 200 seconds at the public fire service communications center.
(3) A trouble condition in 9.4.3.2.3.14(B)(2) shall activate an audible and distinctive visual signal at the auxiliary box indicating a communications failure.
(4) A trouble condition shall activate a trouble signal at the fire command center or fire alarm control unit.

(C) Where a separate device is required to interface the fire alarm control unit to the auxiliary fire alarm system, all communication paths shall be monitored for integrity and shall comply with 9.4.3.2.3.14.

9.4.4 Master Boxes. Master boxes shall comply with the requirements of 9.4.2 and 9.4.3.

9.5 Alarm-Receiving Equipment at Public Fire Service Communications Center.

9.5.1 General. The requirements of 9.5.1.1 through 9.5.1.9 shall apply to all alarm-receiving equipment.

9.5.1.1 Type A and Type B Systems.

9.5.1.1.1 Alarm systems shall be Type A or Type B.

9.5.1.1.2 A Type A system shall be provided where the number of all alarms required to be retransmitted exceeds 2500 per year.

9.5.1.1.3 Where a Type A system is required, the automatic electronic retransmission of incoming alarms shall be permitted, provided both of the following conditions are met:

(1) Approved facilities are provided for the automatic receipt, storage, retrieval, and retransmission of alarms in the order received.
(2) The operator(s) of the dispatch facility shall have the capability to immediately override the automatic retransmission and revert to manual retransmission.

9.5.1.2 Visual Recording Devices.

9.5.1.2.1 Alarms from boxes shall be automatically received and recorded at the public fire service communications center.

9.5.1.2.2 A device for producing a permanent graphic recording of all alarm, supervisory, trouble, and test signals received or retransmitted, or both, shall be provided at each public fire service communications center for each alarm circuit and tie circuit.

9.5.1.2.3 Reserve recording devices shall be provided in accordance with 9.5.1.2.3.1 and 9.5.1.2.3.2.

9.5.1.2.3.1 Where each circuit is served by a dedicated recording device, the number of reserve recording devices required on site shall be equal to at least 5 percent of the circuits in service and in no case less than 1 device.

9.5.1.2.3.2 Where two or more circuits are served by a common recording device, a reserve recording device shall be provided on site for each circuit connected to a common recorder.

9.5.1.2.4 In a Type B wire system, one such recording device shall be installed in each fire station and at least one shall be installed in the public fire service communications center.

9.5.1.2.5 A permanent visual record and an audible signal shall be required to indicate the receipt of an alarm. The permanent record shall indicate the exact location from which the alarm is being transmitted.

9.5.1.2.6 The audible signal device shall be permitted to be common to two or more box circuits and arranged so that the fire alarm operator is able to manually silence the signal temporarily by a self-restoring switch.

9.5.1.2.7 Facilities shall be provided that automatically record the date and time of receipt of each alarm.

Exception: Only the time shall be required to be automatically recorded for voice recordings.

9.5.1.3 System Integrity.

9.5.1.3.1 Wired circuits upon which transmission and receipt of alarms depend shall be constantly monitored for integrity to provide prompt warning of conditions adversely affecting reliability.

9.5.1.3.2 The power supplied to all required circuits and devices of the system shall be constantly monitored for integrity.

9.5.1.4 Trouble Signals.

9.5.1.4.1 Trouble signals shall be indicated where there is a trained and competent person on duty at all times.

9.5.1.4.2 Trouble signals shall be distinct from alarm signals and shall be indicated by a visual and audible signal.

9.5.1.4.3 The audible signal shall be permitted to be common to more than one circuit that is monitored for integrity.

9.5.1.4.4 A switch for silencing the audible trouble signal shall be permitted, provided the visual signal remains operating until the silencing switch is restored to its normal position.

9.5.1.4.5 The audible signal shall be responsive to faults on any other circuits that occur prior to restoration of the silencing switch to its normal position.

9.5.1.5 Power Supply. The forms and arrangements for public fire reporting systems power supplies shall comply with 9.5.1.5.1 through 9.5.1.5.8.

9.5.1.5.1 Each box circuit or coded radio receiving system shall be served by the following:

Copyright National Fire Protection Association
Provided by IHS under license with NFPA
No reproduction or networking permitted without license from IHS
Not for Resale

(1)*Form 4A, which is an inverter, powered from a common rectifier, receiving power by a single source of alternating current with a floating storage battery having a 24-hour standby capacity.
(2)*Form 4B, which is an inverter, powered from a common rectifier, receiving power from two sources of alternating current with a floating storage battery having a 4-hour standby capacity.
(3)*Form 4C, which is a rectifier, converter, or motor generator receiving power from two sources of alternating current with transfer facilities to apply power from the secondary source to the system within 30 seconds.

9.5.1.5.2 Form 4A and Form 4B shall be permitted to distribute the system load between two or more common rectifiers and batteries.

9.5.1.5.3 Batteries, motor generators, or rectifiers shall be able to supply all connected circuits without exceeding the capacity of any battery or overloading any generator or rectifier, so that circuits developing grounds or crosses with other circuits each shall be able to be supplied by an independent source to the extent required by 9.5.1.5.1.

9.5.1.5.4 Provision shall be made for supplying any circuit from any battery, generator, or rectifier.

9.5.1.5.5 Enclosed fuses shall be provided at points where supplies for individual circuits are taken from common leads.

9.5.1.5.6 Local circuits at public fire service communications centers shall be supplied in accordance with 9.5.1.5.6.1 and 9.5.1.5.6.2.

9.5.1.5.6.1 The source of power for local circuits required to operate the essential features of the system shall be monitored for integrity.

9.5.1.5.6.2 Local circuits at public fire service communications centers shall be supplied either in common with box circuits or coded radio-receiving system circuits or by a separate power source.

9.5.1.5.7 Visual and audible means to indicate a 15 percent or greater reduction of normal power supply (rated voltage) shall be provided.

9.5.1.5.8 Where the electrical service/capacity of the equipment required under Section 4.7 of NFPA 1221, *Standard for the Installation, Maintenance, and Use of Emergency Services Communications Systems*, satisfies the needs of equipment in this chapter, such equipment shall not be required to be duplicated.

9.5.1.6 Rectifiers, Converters, Inverters, and Motor Generators.

9.5.1.6.1 Rectifiers shall be supplied through an isolating transformer that takes energy from a circuit not to exceed 250 volts.

9.5.1.6.2 Complete spare units or spare parts shall be in reserve.

9.5.1.6.3 One spare rectifier shall be provided for every 10 operating rectifiers on a system. No system shall have less than one spare.

9.5.1.6.4 Leads from rectifiers or motor generators, with storage battery floating, shall have fuses rated at not less than 1 ampere and not more than 200 percent of maximum connected load. Where not provided with battery floating, the fuse shall be not less than 3 amperes.

9.5.1.7 Engine-Driven Generators. The installation of engine-driven generator sets shall conform to the provisions of NFPA 37, *Standard for the Installation and Use of Stationary Combustion Engines and Gas Turbines*; NFPA 11, *Standard for Low-, Medium-, and High-Expansion Foam*; and NFPA 1221, *Standard for the Installation, Maintenance, and Use of Emergency Services Communications Systems*.

9.5.1.8 Float-Charged Batteries.

9.5.1.8.1 Float-charged batteries shall be of the storage type. Primary batteries (dry cells) shall not be used. Lead-acid batteries shall be in jars of glass or other approved transparent materials; other types of batteries shall be in containers approved for the purpose.

9.5.1.8.2 Float-charged batteries shall be located on the same floor of the building as the operating equipment and shall be available for maintenance and inspection. The battery room shall be above ground and shall be ventilated to prevent accumulation of explosive gas mixtures; special ventilation shall be required only for unsealed cells.

9.5.1.8.3 Batteries shall be mounted to provide effective insulation from the ground and from other batteries.

9.5.1.8.4 Battery mounting shall be protected against deterioration and shall provide stability, especially in geographic areas subject to seismic disturbance.

9.5.1.9 Equipment Fire Protection. Where applicable, electronic computer/data processing equipment shall be protected in accordance with NFPA 75, *Standard for the Protection of Information Technology Equipment*.

9.5.2 Coded Wired Reporting Systems.

9.5.2.1 System Arrangement and Operation.

9.5.2.1.1 For a Type B system, the effectiveness of noninterference and succession functions between box circuits shall be no less than between boxes in any one circuit.

9.5.2.1.2 The disablement of any metallic box circuit shall cause a warning signal in all other circuits, and, thereafter, the circuit or circuits not otherwise broken shall be automatically restored to operative condition.

9.5.2.1.3 Box circuits shall be sufficient in number and laid out so that the areas that would be left without box protection in case of disruption of a circuit do not exceed those covered by 20 properly spaced boxes where all or any part of the circuit is of aerial open-wire, or by 30 properly spaced boxes where the circuit is entirely in underground or messenger-supported cable.

9.5.2.1.4 Where all boxes on any individual circuit and associated equipment are designed and installed to provide for receipt of alarms through the ground in the event of a break in the circuit, the circuit shall be permitted to serve twice the number of aerial open-wire and cable circuits, respectively, as are specified in 9.5.2.1.3.

9.5.2.1.5 The installation of additional boxes in an area served by the number of boxes spaced as indicated in 9.5.2.1.1 through 9.5.2.1.4 shall not constitute geographical overloading of a circuit.

9.5.2.1.6 Sounding devices for signals shall be provided for box circuits.

9.5.2.1.6.1 A common sounding device for more than one circuit shall be permitted to be used in a Type A system and shall be installed at the public fire service communications center.

Copyright National Fire Protection Association
Provided by IHS under license with NFPA
No reproduction or networking permitted without license from IHS
Not for Resale

9.5.2.1.6.2 In a Type B system, a sounding device shall be installed in each fire station at the same location as the recording device for that circuit, unless installed at the public fire service communications center, where a common sounding device shall be permitted.

9.5.2.2 Constant-Current (100 milliampere) Systems. Constant-current systems shall comply with the requirements of 9.5.2.2.1 through 9.5.2.2.6.

9.5.2.2.1 Means shall be provided for manually regulating the current in box circuits so that the operating current is maintained within 10 percent of normal throughout changes in external circuit resistance from 20 percent above normal to 50 percent below normal.

9.5.2.2.2 The voltage supplied to maintain normal line current on box circuits shall not exceed 150 volts, measured under no-load conditions, and shall be such that the line current cannot be reduced below the approved operating value by the simultaneous operation of four boxes.

9.5.2.2.3 Visual and audible means to indicate a 20 percent or greater reduction in the normal current in any alarm circuit shall be provided.

9.5.2.2.4 All devices connected in series with any alarm circuit shall function when the alarm circuit current is reduced to 70 percent of normal.

9.5.2.2.5 Meters shall be provided to indicate the current in any box circuit and the voltage of any power source. Meters used in common for two or more circuits shall be provided with cut-in devices designed to reduce the probability of cross-connecting circuits.

9.5.2.2.6 Necessary switches, testing, and signal transmitting and receiving devices shall be provided to allow the isolation, control, and test of each circuit up to at least 10 percent of the total number of box and dispatch circuits, but never less than two circuits.

9.5.2.3 Grounded Common-Current Systems. Where common-current source systems are grounded, the requirements of 9.5.2.3.1 and 9.5.2.3.2 shall apply.

9.5.2.3.1 Where common-current source systems are grounded, the ground shall not exceed 10 percent of resistance of any connected circuit and shall be located at one side of the battery.

9.5.2.3.2 Visual and audible indicating devices shall be provided for each box and dispatch circuit to give immediate warning of ground leakage endangering operability.

9.5.3 Coded Radio Reporting Systems.

9.5.3.1 System Arrangement and Operation.

9.5.3.1.1 Type A systems shall comply with 9.5.3.1.1.1 through 9.5.3.1.1.6.

9.5.3.1.1.1* Two separate receiving networks shall be required for each frequency. Each network shall include the following:

(1) Antenna
(2) RF receiver
(3) Signaling processing equipment
(4) Time/date alarm printer
(5) Audible alerting device
(6) Power supply

9.5.3.1.1.2 Both receiving networks shall be installed at the public fire service communications center.

9.5.3.1.1.3 Failure of either receiving network shall not affect the receipt of messages from boxes.

9.5.3.1.1.4 Where the system configuration is such that a polling device is incorporated into the receiving network to allow remote or selective initiation of box tests, a separate device shall be included in each of the two required receiving networks.

9.5.3.1.1.5 The polling devices shall be configured for automatic cycle initiation in their primary operating mode, shall be capable of continuous self-monitoring, and shall be integrated into the network(s) to provide automatic switchover and operational continuity in the event of failure of either device.

9.5.3.1.1.6 Test signals from boxes shall not be required to include the date as part of their permanent recording, provided that the date is automatically printed on the recording tape at the beginning of each calendar day.

9.5.3.1.2 Type B systems shall comply with 9.5.3.1.2.1 and 9.5.3.1.2.2.

9.5.3.1.2.1 For each frequency used, a single, complete receiving network shall be permitted in each fire station, provided the public fire service communications center conforms to 9.5.3.1.1.1 through 9.5.3.1.1.3. Where the jurisdiction maintains two or more alarm reception points in operation, one receiving network shall be permitted to be at each alarm reception point.

9.5.3.1.2.2 Where alarm signals are transmitted to a fire station from the public fire service communications center using the coded radio-type receiving equipment in the fire station to receive and record the alarm message, a second receiving network conforming to 9.5.3.1.2.1 shall be provided at each fire station, and that receiving network shall employ a frequency other than that used for the receipt of box messages.

9.5.3.1.3 A device for producing a permanent graphic recording of all alarm, supervisory, trouble, and test signals received or retransmitted, or both, shall be provided at the public fire service communications center.

9.5.3.1.4 Where box message signals to the public fire service communications center or acknowledgment of message receipt signals from the public fire service communications center to the box are repeated, associated repeating facilities shall conform to the requirements indicated in 7.1.1.4(d) of NFPA 1221, *Standard for the Installation, Maintenance, and Use of Emergency Services Communications Systems.*

9.5.3.2 Radio Box Channel (Frequency). The number of boxes permitted on a single frequency shall be governed by the following:

(1) For systems that use one-way transmission in which the individual box automatically initiates the required message *(see 9.5.3.4.3)* using circuitry integral to the boxes, not more than 500 boxes shall be permitted on a single frequency.
(2) For systems that use a two-way concept in which interrogation signals *(see 9.5.3.4.3)* are transmitted to the individual boxes from the public fire service communications center on the same frequency used for receipt of alarms, not more than 250 boxes shall be permitted on a single frequency. Where interrogation signals are transmitted on a frequency that differs from that used for receipt of alarms, not more than 500 boxes shall be permitted on a single frequency.

Copyright National Fire Protection Association
Provided by IHS under license with NFPA
No reproduction or networking permitted without license from IHS
Not for Resale

(3) A specific frequency shall be designated for both fire and other fire-related or public safety alarm signals and for monitoring for integrity signals.

9.5.3.3 Power. Power shall be provided in accordance with 9.5.1.5.

9.5.3.4 Monitoring for Integrity.

9.5.3.4.1 All coded radio box systems shall provide constant monitoring of the frequency in use. Both an audible and a visual indication of any sustained carrier signal, where in excess of 15-second duration, shall be provided for each receiving system at the public fire service communications center.

9.5.3.4.2 The power supplied to all required circuits and devices of the system shall be monitored for integrity.

9.5.3.4.3* Each coded radio box shall automatically transmit a test message at least once in each 24-hour period.

9.5.3.4.4 Receiving equipment associated with coded radio-type systems, including any related repeater(s), shall be tested at least hourly. The receipt of test messages that do not exceed 60-minute intervals shall meet this requirement.

9.5.3.4.5 Radio repeaters upon which receipt of alarms depends shall be provided with dual receivers, transmitters, and power supplies. Failure of the primary receiver, transmitter, or power supply shall cause an automatic switchover to the secondary receiver, transmitter, or power supply.

Exception: Manual switchover shall be permitted provided it is completed within 30 seconds.

9.5.3.4.6 Trouble signals shall actuate a sounding device located where there is always a trained, competent person on duty.

9.5.3.4.7 Trouble signals shall be distinct from alarm signals and shall be indicated by a visual and audible signal.

9.5.3.4.7.1 The audible signal shall be permitted to be common to two or more monitored circuits.

9.5.3.4.7.2 A switch for silencing the audible trouble signal shall be permitted where the visual signal remains operating until the silencing switch is restored to its normal position.

9.5.3.4.8 The audible signal shall be responsive to subsequent faults in other monitored functions prior to restoration of the silencing switch.

9.5.3.5 Physical Protection of Transmission Line. The antenna transmission line between the transmitter and the antenna shall be installed in rigid metal, intermediate metal conduit, or electrical metallic tubing in accordance with NFPA 70, *National Electrical Code*.

9.5.4 Telephone (Series) Reporting Systems.

9.5.4.1 Recording devices shall be provided in accordance with 9.5.4.1.1 and 9.5.4.1.2.

9.5.4.1.1 A permanent visual recording device installed in the public fire service communications center shall be provided to record all incoming box signals.

9.5.4.1.2 A spare recording device shall be provided for five or more box circuits.

9.5.4.2 A second visual means of identifying the calling box shall be provided.

9.5.4.3 Audible signals shall indicate all incoming calls from box circuits.

9.5.4.4 All voice transmissions from boxes for emergencies shall be recorded with the capability of instant playback.

9.5.4.5 A voice-recording facility shall be provided for each operator handling incoming alarms to eliminate the possibility of interference.

9.5.4.6 Box circuits shall be sufficient in number and laid out so that the areas that would be left without box protection in case of disruption of a circuit do not exceed those covered by 20 properly spaced boxes where all or any part of the circuit is of aerial open-wire, or 30 properly spaced boxes where the circuit is entirely in underground or messenger-supported cable.

9.5.4.7 Where all boxes on any individual circuit and associated equipment are designed and installed to provide for receipt of alarms through the ground in the event of a break in the circuit, the circuit shall be permitted to serve twice the number of aerial open-wire and cable circuits, respectively, as is specified in 9.5.4.6.

9.5.4.8 The installation of additional boxes in an area served by the number of boxes spaced as indicated in 9.5.4.6 shall not constitute geographical overloading of a circuit.

9.6 Remote Receiving Equipment — Facilities for Receipt of Box Alarms at a Remote Communications Center. Where the alarm-receiving equipment is located at a location other than where the box circuit protection, controls, and power supplies are located, the requirements of 9.6.1 through 9.6.8, in addition to all of the requirements of Section 9.5, shall apply.

9.6.1 All equipment used to provide the primary and remote receiving facilities shall be listed for its intended use and shall be installed in accordance with NFPA 70, *National Electrical Code*.

9.6.2 The monitoring for integrity of all box circuits shall be provided with a visual and audible means to indicate a 20 percent or greater reduction or increase in the normal current in any box alarm circuit. The visual means shall identify the exact circuit affected.

9.6.3 Monitoring for integrity of all power supplies shall be provided with visual and audible means to indicate a loss of primary or standby power supplies at both the public fire service communications center and remote communications center.

9.6.4 A minimum of two separate means of interconnection shall be provided between the public fire service communications center and remote communications center receiving equipment. This interconnection shall be dedicated and shall not be used for any other purpose.

9.6.5 Where data transmission or multiplexing equipment is used that is not an integral part of the alarm-receiving equipment, a visual and audible means shall be provided to monitor the integrity of the external equipment. This shall include monitoring all primary and standby power supplies as well as the transmission of data.

9.6.6 Power shall be provided in accordance with 9.5.1.5.

9.6.7 The use of an uninterruptible power supply (UPS) to comply with standby power requirements shall not be permitted.

9.6.8 Tie circuits shall be provided in accordance with 9.6.8.1 through 9.6.8.3.

Copyright National Fire Protection Association
Provided by IHS under license with NFPA
No reproduction or networking permitted without license from IHS
Not for Resale

9.6.8.1 A separate tie circuit shall be provided from the public fire service communications center to each subsidiary communications center.

9.6.8.2 The tie circuit between the public fire service communications center and the subsidiary public fire service communications center shall not be used for any other purpose.

9.6.8.3 In a Type B wire system, where all boxes in the system are of the succession type, it shall be permitted to use the tie circuit as a dispatch circuit to the extent permitted by NFPA 1221, *Standard for the Installation, Maintenance, and Use of Emergency Services Communications Systems.*

9.7 Public Cable Plant. Metallic and fiber optic cabling systems and interconnections between alarm transmission equipment and alarm-receiving equipment shall comply with the requirements of Section 9.7.

9.7.1 Requirements for Metallic and Fiber Optic Systems — Metallic and Fiber Optic Interconnections.

9.7.1.1 Circuit Conductors and Fiber Optic Strands.

9.7.1.1.1 Exterior metallic, fiber optic cable and wire shall conform to International Municipal Signal Association (IMSA) specifications or an approved equivalent.

Exception: Where circuit conductors or fiber optic strands are provided by a public utility on a lease basis, IMSA specifications shall not apply.

9.7.1.1.2 Where a public box is installed inside a building, the circuit from the point of entrance to the public box shall be installed in rigid metal, intermediate metal conduit, or electrical metallic tubing in accordance with NFPA 70, *National Electrical Code.*

Exception: This requirement shall not apply to coded radio box systems.

9.7.1.1.3 Wires and fiber optic strands shall be terminated so as to prevent breaking from vibration or stress.

9.7.1.1.4 Circuit conductors and fiber optic cables on terminal racks shall be identified and isolated from conductors of other systems wherever possible and shall be protected from mechanical injury.

9.7.1.2 Cables. The requirements of 9.7.1.2 shall apply to 9.7.1.3 through 9.7.1.6.

9.7.1.2.1 Exterior metallic and fiber optic cable and wire shall conform to IMSA specifications or an approved equivalent.

9.7.1.2.2 Overhead, underground, or direct burial cables shall be specifically approved for the purpose.

9.7.1.2.3 Metallic and fiber optic cables used in interior installations shall comply with NFPA 70, *National Electrical Code*, and shall be installed in accordance with the manufacturer's installation instructions and practices.

9.7.1.2.4 The combination of other signal wires or fiber optic strands in the same cable with fire alarm wires shall comply with 9.7.1.2.4.1 and 9.7.1.2.4.2.

9.7.1.2.4.1 Other municipally controlled signal wires and fiber optic strands shall be permitted to be installed in the same cable with fire alarm wires.

9.7.1.2.4.2 Cables controlled by or containing wires or fiber optic strands of private signaling organizations shall be permitted to be used for fire alarm purposes only by permission of the authority having jurisdiction.

9.7.1.2.5 Signaling wire and fiber optic cables containing metallic protection or strength members shall comply with 9.7.1.2.5.1 and 9.7.1.2.5.2.

9.7.1.2.5.1 Signaling wires that are able to introduce a hazard, because of the source of current supply, shall be protected in accordance with NFPA 70, *National Electrical Code.*

9.7.1.2.5.2 Fiber optic cables containing metallic protection or strength members shall be grounded and protected in accordance with NFPA 70, *National Electrical Code.*

9.7.1.2.6 All metallic cables, with all taps and splices made, shall be tested for insulation resistance when installed but before connection to terminals. Such tests shall indicate an insulation resistance of at least 200 megohms per mile between any one conductor and all other conductors, the sheath, and the ground.

9.7.1.3 Underground Cables.

9.7.1.3.1 Underground metallic and fiber optic cables in duct or direct burial shall be brought aboveground only at points where liability of mechanical injury or of disablement from heat incidental to fires in adjacent buildings is minimized.

9.7.1.3.2 Metallic and fiber optic cables shall be permitted in duct systems and manholes containing low-tension fire alarm system conductors only, except low-tension secondary power cables shall be permitted.

9.7.1.3.3 Where in duct systems or manholes that contain power circuit conductors in excess of 250 volts to ground, metallic and fiber optic fire alarm cables shall be located as far as possible from such power cables and shall be separated from them by a noncombustible barrier or by such other means as is practicable to protect the fire alarm cables from injury.

9.7.1.3.4 All cables installed in manholes shall be racked and marked for identification.

9.7.1.3.5 All conduits or ducts entering buildings from underground duct systems shall be effectively sealed against moisture or gases entering the building.

9.7.1.3.6 All cable joints shall be located only in manholes, fire stations, and other locations where accessibility is provided and where there is little liability of injury to the cable due to either falling walls or operations in the buildings.

9.7.1.3.6.1 Cable joints shall be made to provide and maintain conductivity, optical continuity for fiber optic cable, insulation, and protection at least equal to that afforded by the cables that are joined.

9.7.1.3.6.2 Open cable ends shall be sealed against moisture.

9.7.1.3.7 Direct-burial cable, without enclosure in ducts, shall be laid in grass plots, under sidewalks, or in other places where the ground is not likely to be opened for other underground construction.

9.7.1.3.7.1 Where splices are made, such splices shall be accessible for inspection and tests.

9.7.1.3.7.2 Such cables shall be buried at least 500 mm (18 in.) deep and, where crossing streets or other areas likely to be opened for other underground construction, shall be in duct or conduit or be covered by creosoted planking of at least 50 mm × 100 mm (2 in. × 4 in.) with half-round grooves, spiked or banded together after the cable is installed.

Copyright National Fire Protection Association
Provided by IHS under license with NFPA
No reproduction or networking permitted without license from IHS
Not for Resale

9.7.1.4 Aerial Construction.

9.7.1.4.1 Fire alarm wires and cables shall be run under all other wires except communications wires.

9.7.1.4.1.1 Precautions shall be provided where passing through trees, under bridges, over railroads, and at other places where injury or deterioration is possible.

9.7.1.4.1.2 All wires and cables shall not be attached to a crossarm that carries electric light and power wires, except circuits carrying up to 220 volts for public communications use, and then only where the 220 volt circuits are tagged or otherwise identified.

9.7.1.4.2 Aerial cable shall be supported by messenger wire of approved tensile strength.

Exception No. 1: Two-conductor cable that has conductors of 20 AWG or larger size and has mechanical strength equal to 10 AWG hard-drawn copper.

Exception No. 2: Fiber optic cable with integral supporting means or all dielectric self-supporting (ADSS) type.

9.7.1.4.3 Single wire shall meet IMSA specifications and shall not be smaller than No. 10 Roebling gauge if of galvanized iron or steel, 10 AWG if of hard-drawn copper, 12 AWG if of approved copper-covered steel, or 6 AWG if of aluminum. Span lengths shall not exceed the manufacturer's recommendations.

9.7.1.4.4 Wires to buildings shall contact only intended supports and shall enter through an approved weatherhead or sleeves slanting upward and inward. Drip loops shall be formed on wires outside of buildings.

9.7.1.5 Leads Down Poles.

9.7.1.5.1 Leads down poles shall be protected against mechanical injury. Any metallic covering shall form a continuous conducting path to ground. Installation, in all cases, shall prevent water from entering the conduit or box.

9.7.1.5.2 Leads to boxes shall have 600 volt insulation approved for wet locations, as defined in NFPA 70, *National Electrical Code*.

9.7.1.6 Wiring Inside Buildings.

9.7.1.6.1 At the public fire service communications center, all conductors and metallic and fiber optic cables shall extend as directly as possible to the operating room in conduits, ducts, shafts, raceways, or overhead racks and troughs of a type of construction affording protection against fire and mechanical injury.

9.7.1.6.2* Where installed in buildings, conductors and fiber optic cables shall be installed in any of the following wiring methods:

(1) Electrical metallic tubing
(2) Intermediate metal conduit
(3) Rigid metal conduit

Exception: Rigid nonmetallic conduit shall be permitted where approved by the authority having jurisdiction.

9.7.1.6.3 Conductors and fiber optic cables shall have an approved insulation. The insulation or other outer covering shall be flame retardant and moisture resistant.

9.7.1.6.4 Conductors and fiber optic cables shall be installed as far as possible without splices or joints. Splices or joints shall be permitted only in listed junction or terminal boxes.

9.7.1.6.4.1 Fire alarm circuits shall be identified by the use of red covers or doors. The words "public fire alarm circuit" shall be clearly marked on all terminal and junction locations to prevent unintentional interference.

9.7.1.6.4.2 Wire and fiber optic terminals, terminal boxes, splices, and joints shall conform to NFPA 70, *National Electrical Code*.

9.7.1.6.5 Metallic and fiber optic cables and wiring exposed to a fire hazard shall be protected in an approved manner.

9.7.1.6.6 Metallic and fiber optic cable terminals and cross-connecting facilities shall be located in or adjacent to the operations room.

9.7.1.6.7 Where signal conductors, non-dielectric fiber optic cables, and electric light and power wires are run in the same shaft, they shall be separated by at least 51 mm (2 in.) or either system shall be encased in a noncombustible enclosure.

9.7.2 Signal Transmission and Receiving Circuits. Signal transmission and receiving circuits shall comply with the requirements of 9.7.2.1 and 9.7.2.2.

9.7.2.1 General.

9.7.2.1.1 ANSI/IEEE C2, *National Electrical Safety Code*, shall be used as a guide for the installation of outdoor circuitry.

9.7.2.1.2 Installation shall provide for the following:

(1) Continuity of service
(2) Protection from mechanical damage
(3) Disablement from heat that is incidental to fire
(4) Protection from falling walls
(5) Damage by floods, corrosive vapors, or other causes

9.7.2.1.3 Open local circuits within single buildings shall be permitted in accordance with Chapter 6.

9.7.2.1.4 All circuits shall be routed so as to allow tracing of circuits for trouble.

9.7.2.1.5 Circuits shall not pass over, under, through, or be attached to buildings or property not owned by or under the control of the authority having jurisdiction or the agency responsible for maintaining the system.

Exception: Where the circuit is terminated at a public fire alarm reporting system initiating device on the premises and where a means, approved by the authority having jurisdiction, is provided to disconnect the circuit from the building or property.

9.7.2.2 Box Circuits. Interior box circuits shall comply with 9.7.2.2.1 and 9.7.2.2.2.

9.7.2.2.1 A means provided only to the authority having jurisdiction or the agency responsible for maintaining the public fire alarm reporting system shall be provided for disconnecting the circuit inside the building.

9.7.2.2.2 Definite notification shall be given to the designated building representative when the interior box(es) is out of service.

9.7.3* Circuit Protection. Circuit protection shall be provided in accordance with 9.7.3.1 through 9.7.3.12.

Copyright National Fire Protection Association
Provided by IHS under license with NFPA
No reproduction or networking permitted without license from IHS
Not for Resale

9.7.3.1 The protective devices shall be located close to or be combined with the cable terminals.

9.7.3.2 Surge arresters approved for the purpose shall be provided and shall be marked with the name of the manufacturer and model designation.

9.7.3.3 All surge arresters shall be connected to a ground in accordance with NFPA 70, *National Electrical Code*.

9.7.3.4 All fuses shall be plainly marked with their rated ampere capacity. All fuses rated over 2 amperes shall be of the enclosed type.

9.7.3.5 Circuit protection required at the public fire service communications center shall be provided in every building that houses public fire service communications center equipment.

9.7.3.6 Each metallic conductor entering a fire station from partially or entirely aerial lines shall be protected by a lightning arrester.

9.7.3.7 All metallic conductors entering the public fire service communications center shall be protected by the following devices, in the order named, starting from the exterior circuit:

(1) A fuse rated at 3 amperes minimum to 7 amperes maximum and not less than 2000 volts
(2) A surge arrester(s)
(3) A fuse or circuit breaker rated at ½ ampere

9.7.3.8 In regard to 9.7.3.7, the ½ ampere protection on the tie circuits shall be omitted at subsidiary public fire service communications centers.

9.7.3.9 At junction points of open aerial metallic conductors and metallic cable, each conductor shall be protected by a surge arrester(s) of the weatherproof type. A connection shall also be between the surge arrester ground, any metallic sheath, and messenger wire.

9.7.3.10 Aerial open-wire and nonmessenger-supported, two-conductor cable circuits shall be protected by a surge arrester(s) at intervals not to exceed 610 m (2000 ft).

9.7.3.11 Where used for aerial construction, surge arresters, other than of the air-gap or self-restoring type, shall not be installed in fire alarm circuits.

9.7.3.12 All protective devices used for aerial construction shall be accessible for maintenance and inspection.

9.8 Mass Notification System. See Annex E.

Chapter 10 Inspection, Testing, and Maintenance

10.1 Application.

10.1.1 The inspection, testing, and maintenance of fire alarm systems, their initiating devices, and notification appliances shall comply with the requirements of this chapter.

10.1.2 The inspection, testing, and maintenance of single- and multiple-station smoke and heat alarms and household fire alarm systems shall comply with the requirements of this chapter.

10.1.3 Procedures that are required by other parties and that exceed the requirements of this chapter shall be permitted.

10.1.4 The requirements of this chapter shall apply to both new and existing systems.

10.2 General.

10.2.1 Performance.

10.2.1.1 Performance Verification. To ensure operational integrity, the fire alarm system shall have an inspection, testing, and maintenance program. Inspection, testing, and maintenance programs shall satisfy the requirements of this Code, shall conform to the equipment manufacturer's published instructions, and shall verify correct operation of the fire alarm system.

10.2.1.2 Impairments.

10.2.1.2.1 The requirements of Section 4.6 shall be applicable when a system is impaired.

10.2.1.2.2 System defects and malfunctions shall be corrected.

10.2.1.2.3 If a defect or malfunction is not corrected at the conclusion of system inspection, testing, or maintenance, the system owner or the owner's designated representative shall be informed of the impairment in writing within 24 hours.

10.2.2 Responsibilities.

10.2.2.1* The property or building owner or the owner's designated representative shall be responsible for inspection, testing, and maintenance of the system and for alterations or additions to this system.

10.2.2.2 The delegation of responsibility shall be in writing, with a copy of such delegation provided to the authority having jurisdiction upon request.

10.2.2.3 Inspection, testing, or maintenance shall be permitted to be done by a person or organization other than the owner if conducted under a written contract.

10.2.2.4 Testing and maintenance of central station service systems shall be performed under the contractual arrangements specified in 8.3.3.

10.2.2.5* Service Personnel Qualifications and Experience.

10.2.2.5.1 Service personnel shall be qualified and experienced in the inspection, testing, and maintenance of fire alarm systems. Qualified personnel shall include, but not be limited to, one or more of the following:

(1) *Personnel who are factory trained and certified for fire alarm system service of the specific type and brand of system
(2) *Personnel who are certified by a nationally recognized fire alarm certification organization acceptable to the authority having jurisdiction
(3) *Personnel who are registered, licensed, or certified by a state or local authority
(4) Personnel who are employed and qualified by an organization listed by a nationally recognized testing laboratory for the servicing of fire alarm systems

10.2.2.5.2 Evidence of qualifications shall be provided to the authority having jurisdiction upon request.

10.2.3* Notification.

10.2.3.1 Before proceeding with any testing, all persons and facilities receiving alarm, supervisory, or trouble signals and all building occupants shall be notified of the testing to prevent unnecessary response.

10.2.3.2 At the conclusion of testing, those previously notified (and others, as necessary) shall be notified that testing has been concluded.

Copyright National Fire Protection Association
Provided by IHS under license with NFPA
No reproduction or networking permitted without license from IHS
Not for Resale

10.2.3.3 The owner or the owner's designated representative and service personnel shall coordinate system testing to prevent interruption of critical building systems or equipment.

10.2.4 System Documentation. Prior to system maintenance or testing, the system certificate and the information regarding the system and system alterations, including specifications, wiring diagrams, and floor plans, shall be provided by the owner or a designated representative to the service personnel upon request.

10.2.5 Releasing Systems. Requirements pertinent to testing the fire alarm systems initiating fire suppression system releasing functions shall be covered by 10.2.5.1 through 10.2.5.6.

10.2.5.1 Testing personnel shall be qualified and experienced in the specific arrangement and operation of a suppression system(s) and a releasing function(s) and shall be cognizant of the hazards associated with inadvertent system discharge.

10.2.5.2 Occupant notification shall be required whenever a fire alarm system configured for releasing service is being serviced or tested.

10.2.5.3 Discharge testing of suppression systems shall not be required by this Code.

10.2.5.4 Suppression systems shall be secured from inadvertent actuation, including disconnection of releasing solenoids or electric actuators, closing of valves, other actions, or combinations thereof, for the specific system, for the duration of the fire alarm system testing.

10.2.5.5 Testing shall include verification that the releasing circuits and components energized or actuated by the fire alarm system are electrically supervised and operate as intended on alarm.

10.2.5.6 Suppression systems and releasing components shall be returned to their functional operating condition upon completion of system testing.

10.2.6 Interface Equipment and Fire Safety Functions.

10.2.6.1* Testing personnel shall be qualified and experienced in the arrangement and operation of interface equipment and fire safety functions.

10.2.6.2 Testing shall be accomplished in accordance with Table 10.4.2.2.

10.3 Inspection.

10.3.1* Visual inspections shall be performed in accordance with the schedules in Table 10.3.1 or more often if required by the authority having jurisdiction.

Exception: Devices or equipment that is inaccessible for safety considerations (e.g., continuous process operations, energized electrical equipment, radiation, and excessive height) shall be inspected during scheduled shutdowns if approved by the authority having jurisdiction. Extended intervals shall not exceed 18 months.

Table 10.3.1 Visual Inspection Frequencies

	Component	Initial/ Reacceptance	Monthly	Quarterly	Semiannually	Annually
1.	Control Equipment: Fire Alarm Systems Monitored for Alarm, Supervisory, and Trouble Signals					
	(a) Fuses	X	—	—	—	X
	(b) Interfaced equipment	X	—	—	—	X
	(c) Lamps and LEDs	X	—	—	—	X
	(d) Primary (main) power supply	X	—	—	—	X
2.	Control Equipment: Fire Alarm Systems Unmonitored for Alarm, Supervisory, and Trouble Signals					
	(a) Fuses	X (weekly)	—	—	—	—
	(b) Interfaced equipment	X (weekly)	—	—	—	—
	(c) Lamps and LEDs	X (weekly)	—	—	—	—
	(d) Primary (main) power supply	X (weekly)	—	—	—	—
3.	Batteries					
	(a) Lead-acid	X	X	—	—	—
	(b) Nickel-cadmium	X	—	—	X	—
	(c) Primary (dry cell)	X	X	—	—	—
	(d) Sealed lead-acid	X	—	—	X	—
4.	Transient Suppressors	X	—	—	X	—
5.	Fire Alarm Control Unit Trouble Signals	X (weekly)	—	—	X	—
6.	Fiber-Optic Cable Connections	X	—	—	—	X
7.	Emergency Voice/Alarm Communications Equipment	X	—	—	X	—

(continues)

Copyright National Fire Protection Association
Provided by IHS under license with NFPA
No reproduction or networking permitted without license from IHS
Not for Resale

Table 10.3.1 *Continued*

Component	Initial/ Reacceptance	Monthly	Quarterly	Semiannually	Annually
8. Remote Annunciators	X	—	—	X	—
9. Initiating Devices					
(a) Air sampling	X	—	—	X	—
(b) Duct detectors	X	—	—	X	—
(c) Electromechanical releasing devices	X	—	—	X	—
(d) Fire extinguishing system(s) or suppression system(s) switches	X	—	—	X	—
(e) Fire alarm boxes	X	—	—	X	—
(f) Heat detectors	X	—	—	X	—
(g) Radiant energy fire detectors	X	—	X	—	—
(h) Smoke detectors (excluding one- and two-family dwellings)	X	—	—	X	—
(i) Supervisory signal devices	X	—	X	—	—
(j) Waterflow devices	X	—	X	—	—
10. Guard's Tour Equipment	X	—	—	X	—
11. Combination Systems					
(a) Fire extinguisher monitoring device/systems	X	—	—	X	—
(b) Carbon monoxide detectors/systems	X	—	—	X	—
12. Interface Equipment	X	—	—	X	—
13. Alarm Notification Appliances — Supervised	X	—	—	X	—
14. Exit Marking Audible Notification Appliances	X	—	—	X	—
15. Supervising Station Fire Alarm Systems — Transmitters					
(a) DACT	X	—	—	X	—
(b) DART	X	—	—	X	—
(c) McCulloh	X	—	—	X	—
(d) RAT	X	—	—	X	—
16. Special Procedures	X	—	—	X	—
17. Supervising Station Fire Alarm Systems — Receivers					
(a) DACR*	X	X	—	—	—
(b) DARR*	X	—	—	X	—
(c) McCulloh systems*	X	—	—	X	—
(d) Two-way RF multiplex*	X	—	—	X	—
(e) RASSR*	X	—	—	X	—
(f) RARS*	X	—	—	X	—
(g) Private microwave*	X	—	—	X	—
18. Public Fire Alarm Reporting System Transmission Equipment					
(a) Publicly accessible fire alarm box	X	—	—	X	—
(b) Auxiliary box	X	—	—	—	X
(c) Master box					
(1) Manual operation	X	—	—	X	—
(2) Auxiliary operation	X	—	—	—	X

*Reports of automatic signal receipt shall be verified daily.

--`,,```,,,,````-`-`,,`,,`,`,,`---

Copyright National Fire Protection Association
Provided by IHS under license with NFPA
No reproduction or networking permitted without license from IHS
Not for Resale

10.3.2 The visual inspection shall be made to ensure that there are no changes that affect equipment performance.

10.4 Testing.

10.4.1 System Testing.

10.4.1.1 Initial Acceptance Testing. All new systems shall be inspected and tested in accordance with the requirements of Chapter 10. The authority having jurisdiction shall be notified prior to the initial acceptance test.

10.4.1.2* Reacceptance Testing.

10.4.1.2.1 Reacceptance testing shall be performed as required in 10.4.1.2.1.1 through 10.4.1.2.1.4.

10.4.1.2.1.1 When an initiating device, notification appliance, or control relay is added, it shall be functionally tested.

10.4.1.2.1.2 When an initiating device, notification appliance, or control relay is deleted, another device, appliance, or control relay on the circuit shall be operated.

10.4.1.2.1.3 When modifications or repairs to control equipment hardware are made, the control equipment shall be tested in accordance with Table 10.4.2.2, items 1(a) and 1(d).

10.4.1.2.1.4 When changes are made to site-specific software, the following shall apply:

(1) All functions known to be affected by the change, or identified by a means that indicates changes, shall be 100 percent tested.
(2) In addition, 10 percent of initiating devices that are not directly affected by the change, up to a maximum of 50 devices, also shall be tested and correct system operation shall be verified.
(3) A revised record of completion in accordance with 4.5.2.1 shall be prepared to reflect these changes.

10.4.1.2.2 Changes to all control units connected or controlled by the system executive software shall require a 10 percent functional test of the system, including a test of at least one device on each input and output circuit to verify critical system functions such as notification appliances, control functions, and off-premises reporting.

10.4.2 Test Methods.

10.4.2.1* At the request of the authority having jurisdiction, the central station facility installation shall be inspected for complete information regarding the central station system, including specifications, wiring diagrams, and floor plans that have been submitted for approval prior to installation of equipment and wiring.

10.4.2.2* Fire alarm systems and other systems and equipment that are associated with fire alarm systems and accessory equipment shall be tested according to Table 10.4.2.2.

10.4.3 Video Image Smoke and Flame Detectors. Video image smoke and flame detectors shall be inspected, tested, and maintained in accordance with the manufacturer's published instructions.

10.4.4* Testing Frequency. Testing shall be performed in accordance with the schedules in Table 10.4.4, except as modified in other paragraphs of 10.4.4, or more often if required by the authority having jurisdiction.

Exception: Devices or equipment that are inaccessible for safety considerations (e.g., continuous process operations, energized electrical equipment, radiation, and excessive height) shall be tested during scheduled shutdowns if approved by the authority having jurisdiction. Extended interval shall not exceed 18 months.

10.4.4.1 If automatic testing is performed at least weekly by a remotely monitored fire alarm control unit specifically listed for the application, the manual testing frequency shall be permitted to be extended to annually. Table 10.4.4 shall apply.

10.4.4.2* In other than one- and two-family dwellings, sensitivity of smoke detectors and single- and multiple-station smoke alarms shall be tested in accordance with 10.4.4.2.1 through 10.4.4.2.6.

10.4.4.2.1 Sensitivity shall be checked within 1 year after installation.

10.4.4.2.2 Sensitivity shall be checked every alternate year thereafter unless otherwise permitted by compliance with 10.4.4.2.3.

10.4.4.2.3 After the second required calibration test, if sensitivity tests indicate that the device has remained within its listed and marked sensitivity range (or 4 percent obscuration light gray smoke, if not marked), the length of time between calibration tests shall be permitted to be extended to a maximum of 5 years.

10.4.4.2.3.1 If the frequency is extended, records of nuisance alarms and subsequent trends of these alarms shall be maintained.

10.4.4.2.3.2 In zones or in areas where nuisance alarms show any increase over the previous year, calibration tests shall be performed.

10.4.4.2.4 To ensure that each smoke detector or smoke alarm is within its listed and marked sensitivity range, it shall be tested using any of the following methods:

(1) Calibrated test method
(2) Manufacturer's calibrated sensitivity test instrument
(3) Listed control equipment arranged for the purpose
(4) Smoke detector/fire alarm control unit arrangement whereby the detector causes a signal at the fire alarm control unit where its sensitivity is outside its listed sensitivity range
(5) Other calibrated sensitivity test methods approved by the authority having jurisdiction

10.4.4.2.5 Detectors or smoke alarms found to have a sensitivity outside the listed and marked sensitivity range shall be cleaned and recalibrated or be replaced.

Exception: Devices listed as field adjustable shall be permitted to be either adjusted within the listed and marked sensitivity range and cleaned and recalibrated, or they shall be replaced.

10.4.4.2.6 The detector or smoke alarm sensitivity shall not be tested or measured using any device that administers an unmeasured concentration of smoke or other aerosol into the detector or smoke alarm.

10.4.4.3 Test frequency of interfaced equipment shall be the same as specified by the applicable NFPA standards for the equipment being supervised.

10.4.4.4 Restorable fixed-temperature, spot-type heat detectors shall be tested in accordance with 10.4.4.4.1 through 10.4.4.4.3.

10.4.4.4.1 Two or more detectors shall be tested on each initiating circuit annually.

10.4.4.4.2 Different detectors shall be tested each year, with records kept by the building owner specifying which detectors have been tested.

Copyright National Fire Protection Association
Provided by IHS under license with NFPA
No reproduction or networking permitted without license from IHS
Not for Resale

Table 10.4.2.2 Test Methods

Device	Method
1. Control Equipment	
(a) Functions	At a minimum, control equipment shall be tested to verify correct receipt of alarm, supervisory, and trouble signals (inputs), operation of evacuation signals and auxiliary functions (outputs), circuit supervision including detection of open circuits and ground faults, and power supply supervision for detection of loss of ac power and disconnection of secondary batteries.
(b) Fuses	The rating and supervision shall be verified.
(c) Interfaced equipment	Integrity of single or multiple circuits providing interface between two or more control units shall be verified. Interfaced equipment connections shall be tested by operating or simulating operation of the equipment being supervised. Signals required to be transmitted shall be verified at the control unit.
(d) Lamps and LEDs	Lamps and LEDs shall be illuminated.
(e) Primary (main) power supply	All secondary (standby) power shall be disconnected and tested under maximum load, including all alarm appliances requiring simultaneous operation. All secondary (standby) power shall be reconnected at end of test. For redundant power supplies, each shall be tested separately.
2. Engine-Driven Generator	If an engine-driven generator dedicated to the fire alarm system is used as a required power source, operation of the generator shall be verified in accordance with NFPA 110, *Standard for Emergency and Standby Power Systems*, by the building owner.
3. Secondary (Standby) Power Supply	All primary (main) power supplies shall be disconnected and the occurrence of required trouble indication for loss of primary power shall be verified. The system's standby and alarm current demand shall be measured or verified and, using manufacturer's data, the ability of batteries to meet standby and alarm requirements shall be verified. General alarm systems shall be operated for a minimum of 5 minutes, and emergency voice communications systems for a minimum of 15 minutes. Primary (main) power supply shall be reconnected at end of test.
4. Uninterrupted Power Supply (UPS)	If a UPS system dedicated to the fire alarm system is used as a required power source, operation of the UPS system shall be verified by the building owner in accordance with NFPA 111, *Standard on Stored Electrical Energy Emergency and Standby Power Systems.*
5. Batteries — General Tests	Prior to conducting any battery testing, the person conducting the test shall ensure that all system software stored in volatile memory is protected from loss.
(a) Visual inspection	Batteries shall be inspected for corrosion or leakage. Tightness of connections shall be checked and ensured. If necessary, battery terminals or connections shall be cleaned and coated. Electrolyte level in lead-acid batteries shall be visually inspected.
(b) Battery replacement	Batteries shall be replaced in accordance with the recommendations of the alarm equipment manufacturer or when the recharged battery voltage or current falls below the manufacturer's recommendations.
(c) Charger test	Operation of battery charger shall be checked in accordance with charger test for the specific type of battery.
(d) Discharge test	With the battery charger disconnected, the batteries shall be load tested following the manufacturer's recommendations. The voltage level shall not fall below the levels specified. *Exception: An artificial load equal to the full fire alarm load connected to the battery shall be permitted to be used in conducting this test.*
(e) Load voltage test	With the battery charger disconnected, the terminal voltage shall be measured while supplying the maximum load required by its application. The voltage level shall not fall below the levels specified for the specific type of battery. If the voltage falls below the level specified, corrective action shall be taken and the batteries shall be retested. *Exception: An artificial load equal to the full fire alarm load connected to the battery shall be permitted to be used in conducting this test.*

Copyright National Fire Protection Association
Provided by IHS under license with NFPA
No reproduction or networking permitted without license from IHS
Not for Resale

Table 10.4.2.2 *Continued*

Device	Method
6. Battery Tests (Specific Types)	
(a) Primary battery load voltage test	The maximum load for a No. 6 primary battery shall not be more than 2 amperes per cell. An individual (1.5 volt) cell shall be replaced when a load of 1 ohm reduces the voltage below 1 volt. A 6 volt assembly shall be replaced when a test load of 4 ohms reduces the voltage below 4 volts.
(b) Lead-acid type	
(1) Charger test	With the batteries fully charged and connected to the charger, the voltage across the batteries shall be measured with a voltmeter. The voltage shall be 2.30 volts per cell ±0.02 volts at 25°C (77°F) or as specified by the equipment manufacturer.
(2) Load voltage test	Under load, the battery shall not fall below 2.05 volts per cell.
(3) Specific gravity	The specific gravity of the liquid in the pilot cell or all of the cells shall be measured as required. The specific gravity shall be within the range specified by the manufacturer. Although the specified specific gravity varies from manufacturer to manufacturer, a range of 1.205–1.220 is typical for regular lead-acid batteries, while 1.240–1.260 is typical for high-performance batteries. A hydrometer that shows only a pass or fail condition of the battery and does not indicate the specific gravity shall not be used, because such a reading does not give a true indication of the battery condition.
(c) Nickel-cadmium type	
(1) Charger test[a]	With the batteries fully charged and connected to the charger, an ampere meter shall be placed in series with the battery under charge. The charging current shall be in accordance with the manufacturer's recommendations for the type of battery used. In the absence of specific information, 1/30 to 1/25 of the battery rating shall be used.
(2) Load voltage test	Under load, the float voltage for the entire battery shall be 1.42 volts per cell, nominal. If possible, cells shall be measured individually.
(d) Sealed lead-acid type	
(1) Charger test	With the batteries fully charged and connected to the charger, the voltage across the batteries shall be measured with a voltmeter. The voltage shall be 2.30 volts per cell ±0.02 volts at 25°C (77°F) or as specified by the equipment manufacturer.
(2) Load voltage test	Under load, the battery shall perform in accordance with the battery manufacturer's specifications.
7. Public Fire Alarm Reporting System Power Supply	
(a) Lead-acid type	Perform the battery tests in accordance with item 6(b)
(b) Nickel-cadmium type	Perform the battery tests in accordance with item 6(c)
(c) Sealed lead-acid type	Perform the battery tests in accordance with item 6(d)
(d) Wired system	Manual tests of the power supply for public reporting circuits shall be made and recorded at least once during each 24-hour period. Such tests shall include the following: (1) Current strength of each circuit. Changes in current of any circuit exceeding 10 percent shall be investigated immediately. (2) Voltage across terminals of each circuit inside of terminals of protective devices. Changes in voltage of any circuit exceeding 10 percent shall be investigated immediately. (3)[b] Voltage between ground and circuits. If this test shows a reading in excess of 50 percent of that shown in the test specified in (2), the trouble shall be immediately located and cleared. Readings in excess of 25 percent shall be given early attention. These readings shall be taken with a calibrated voltmeter of not more than 100 ohms resistance per volt. Systems in which each circuit is supplied by an independent current source (Forms 3 and 4) require tests between ground and each side of each circuit. Common current source systems (Form 2) require voltage tests between ground and each terminal of each battery and other current source. (4) Ground current reading shall be permitted in lieu of (3). If this method of testing is used, all grounds showing a current reading in excess of 5 percent of the supplied line current shall be given immediate attention.

(continues)

Copyright National Fire Protection Association
Provided by IHS under license with NFPA
No reproduction or networking permitted without license from IHS
Not for Resale

Table 10.4.2.2 *Continued*

Device	Method
7. Public Fire Alarm Reporting System *(continued)* (d) Wired system *(continued)*	(5) Voltage across terminals of common battery, on switchboard side of fuses. (6) Voltage between common battery terminals and ground. Abnormal ground readings shall be investigated immediately. Tests specified in (5) and (6) shall apply only to those systems using a common battery. If more than one common battery is used, each common battery shall be tested.
8. Public Fire Alarm Reporting System Transmission Equipment	
(a) Publicly accessible fire alarm box	Publicly accessible initiating device(s) shall be actuated. Receipt of not less than three complete rounds of signal impulses shall be verified. This test shall be performed under normal circuit conditions. If the device is equipped for open circuit operation (ground return), it shall be tested in this condition as one of the semiannual tests.
(b) Auxiliary box	Each initiating circuit of the auxiliary box shall be tested by actuation of a protected premises initiating device connected to that circuit. Receipt of not less than three complete rounds of signal impulses shall be verified.
(c) Master box	
(1) Manual operation	Perform the tests prescribed for 8(a).
(2) Auxiliary operation	Perform the tests prescribed for 8(b).
9. Transient Suppressors	Lightning protection equipment shall be inspected and maintained per the manufacturer's published instructions. Additional inspections shall be required after any lightning strikes. Equipment located in moderate to severe areas outlined in NFPA 780, *Standard for the Installation of Lightning Protection Systems*, Annex L, shall be inspected semiannually and after any lightning strikes.
10. Fire Alarm Control Unit Trouble Signals	
(a) Audible and visual	Operation of control unit trouble signals shall be verified as well as ring-back feature for systems using a trouble-silencing switch that requires resetting.
(b) Disconnect switches	If control unit has disconnect or isolating switches, performance of intended function of each switch shall be verified and receipt of trouble signal when a supervised function is disconnected shall also be verified.
(c) Ground-fault monitoring circuit	If the system has a ground detection feature, the occurrence of ground-fault indication shall be verified whenever any installation conductor is grounded.
(d) Transmission of signals to off-premises location	An initiating device shall be actuated and receipt of alarm signal at the off-premises location shall be verified. A trouble condition shall be created and receipt of a trouble signal at the off-premises location shall be verified. A supervisory device shall be actuated and receipt of a supervisory signal at the off-premises location shall be verified. If a transmission carrier is capable of operation under a single- or multiple-fault condition, an initiating device shall be activated during such fault condition and receipt of a trouble signal at the off-premises location shall be verified, in addition to the alarm signal.
11. Remote Annunciators	The correct operation and identification of annunciators shall be verified. If provided, the correct operation of annunciator under a fault condition shall be verified.
12. Conductors — Metallic	
(a) Stray voltage	All installation conductors shall be tested with a volt/ohmmeter to verify that there are no stray (unwanted) voltages between installation conductors or between installation conductors and ground. Unless a different threshold is specified in the published manufacturer's instructions for the installed equipment, the maximum allowable stray voltage shall not exceed 1 volt ac/dc.
(b) Ground faults	All installation conductors other than those intentionally and permanently grounded shall be tested for isolation from ground per the installed equipment manufacturer's published instructions.

Copyright National Fire Protection Association
Provided by IHS under license with NFPA
No reproduction or networking permitted without license from IHS
Not for Resale

Table 10.4.2.2 *Continued*

Device	Method
(c) Short-circuit faults	All installation conductors other than those intentionally connected together shall be tested for conductor-to-conductor isolation per the published manufacturer's instructions for the installed equipment. These same circuits also shall be tested conductor-to-ground.
(d) Loop resistance	With each initiating and indicating circuit installation conductor pair short-circuited at the far end, the resistance of each circuit shall be measured and recorded. It shall be verified that the loop resistance does not exceed the limits specified in the published manufacturer's instructions for the installed equipment.
(e) Supervision	Introduction of a fault in any circuit monitored for integrity shall result in a trouble indication at the fire alarm control unit. One connection shall be opened at not less than 10 percent of the initiating devices, notification appliances and controlled devices on every initiating device circuit, notification appliance circuit, and signaling line circuit.
13. Conductors — Nonmetallic	
(a) Circuit integrity	Each initiating device, notification appliance, and signaling line circuit shall be tested to confirm that the installation conductors are monitored for integrity in accordance with the requirements of Chapter 4 and Chapter 6.
(b) Fiber optics	The fiber-optic transmission line shall be tested in accordance with the manufacturer's published instructions by the use of an optical power meter or by an optical time domain reflectometer used to measure the relative power loss of the line. This relative figure for each fiber-optic line shall be recorded in the fire alarm control unit. If the power level drops 2 percent or more from the value recorded during the initial acceptance test, the transmission line, section thereof, or connectors shall be repaired or replaced by a qualified technician to bring the line back into compliance with the accepted transmission level per the manufacturer's published instructions.
(c) Supervision	Introduction of a fault in any supervised circuit shall result in a trouble indication at the control unit. One connection shall be opened at not less than 10 percent of the initiating device, notification appliance, and signaling line circuit. Each initiating device, notification appliance, and signaling line circuit shall be tested for correct indication at the control unit. All circuits shall perform as indicated in Table 6.5, Table 6.6.1, or Table 6.7.
14. Initiating Devices	
(a) Electromechanical releasing device	
(1) Nonrestorable-type link	Correct operation shall be verified by removal of the fusible link and operation of the associated device. Any moving parts shall be lubricated as necessary.
(2) Restorable-type link[c]	Correct operation shall be verified by removal of the fusible link and operation of the associated device. Any moving parts shall be lubricated as necessary.
(b) Fire extinguishing system(s) or suppression system(s) alarm switch	The switch shall be mechanically or electrically operated and receipt of signal by the fire alarm control unit shall be verified.
(c) Fire–gas and other detectors	Fire–gas detectors and other fire detectors shall be tested as prescribed by the manufacturer and as necessary for the application.
(d) Heat detectors	
(1) Fixed-temperature, rate-of-rise, rate of compensation, restorable line, spot type (excluding pneumatic tube type)	Heat test shall be performed with a heat source per the manufacturer's published inspections for response within 1 minute. A test method shall be used that is specified in the published manufacturer's instructions for the installed equipment, or other method shall be used that will not damage the nonrestorable fixed-temperature element of a combination rate-of-rise/fixed-temperature element detector.
(2) Fixed-temperature, nonrestorable line type	Heat test shall not be performed. Functionality shall be tested mechanically and electrically. Loop resistance shall be measured and recorded. Changes from acceptance test shall be investigated.

(continues)

Copyright National Fire Protection Association
Provided by IHS under license with NFPA
No reproduction or networking permitted without license from IHS
Not for Resale

Table 10.4.2.2 *Continued*

Device	Method
14. Initiating Devices *(continued)*	
(d) Heat detectors *(continued)*	
(3) Fixed-temperature, nonrestorable spot type	After 15 years from initial installation, all devices shall be replaced or two detectors per 100 shall be laboratory tested. The two detectors shall be replaced with new devices. If a failure occurs on any of the detectors removed, additional detectors shall be removed and tested to determine either a general problem involving faulty detectors or a localized problem involving one or two defective detectors. If detectors are tested instead of replaced, tests shall be repeated at intervals of 5 years.
(4) Nonrestorable (general)	Heat tests shall not be performed. Functionality shall be tested mechanically and electrically.
(5) Restorable line type, pneumatic tube only	Heat tests shall be performed (where test chambers are in circuit), or a test with pressure pump shall be conducted.
(6) Single- and multiple-station heat alarms	Functional tests shall be conducted according to manufacturer's published instructions. Nonrestorable heat detectors shall not be tested with heat.
(e) Fire alarm boxes	Manual fire alarm boxes shall be operated per the manufacturer's published instructions. Key-operated presignal and general alarm manual fire alarm boxes shall both be tested.
(f) Radiant energy fire detectors	Flame detectors and spark/ember detectors shall be tested in accordance with the manufacturer's published instructions to determine that each detector is operative. Flame detector and spark/ember detector sensitivity shall be determined using any of the following: (1) Calibrated test method (2) Manufacturer's calibrated sensitivity test instrument (3) Listed control unit arranged for the purpose (4) Other approved calibrated sensitivity test method that is directly proportional to the input signal from a fire, consistent with the detector listing or approval If designed to be field adjustable, detectors found to be outside of the approved range of sensitivity shall be replaced or adjusted to bring them into the approved range. Flame detector and spark/ember detector sensitivity shall not be determined using a light source that administers an unmeasured quantity of radiation at an undefined distance from the detector.
(g) Smoke detectors	
(1) In other than one- and two-family dwellings, system detectors and single-station smoke alarms	The detectors shall be tested in place to ensure smoke entry into the sensing chamber and an alarm response. Testing with smoke or listed aerosol approved by the manufacturer shall be permitted as acceptable test methods. Other methods listed in the manufacturer's published instructions that ensure smoke entry into the sensing chamber shall be permitted. Any of the following tests shall be performed to ensure that each smoke detector is within its listed and marked sensitivity range: (1) Calibrated test method (2) Manufacturer's calibrated sensitivity test instrument (3) Listed control equipment arranged for the purpose (4) Smoke detector/control unit arrangement whereby the detector causes a signal at the control unit when its sensitivity is outside its listed sensitivity range (5) Other calibrated sensitivity test method approved by the authority having jurisdiction
(2) Single- and multiple-station smoke alarms used in one- and two-family dwellings	Functional tests shall be conducted according to manufacturer's published instructions.
(3) Air sampling	Per test methods documented in the manufacturer's published instructions, detector alarm response shall be verified through the end sampling port on each pipe run; airflow through all other ports shall be verified as well.
(4) Duct type	Air duct detectors shall be tested or inspected to ensure that the device will sample the airstream. The test shall be made in accordance with the manufacturer's published instructions.
(5) Projected beam type	The detector shall be tested by introducing smoke, other aerosol, or an optical filter into the beam path.

Copyright National Fire Protection Association
Provided by IHS under license with NFPA
No reproduction or networking permitted without license from IHS
Not for Resale

Table 10.4.2.2 *Continued*

Device	Method
(6) Smoke detector with built-in thermal element	Both portions of the detector shall be operated independently as described for the respective devices.
(7) Smoke detectors with control output functions	It shall be verified that the control capability shall remain operable even if all of the initiating devices connected to the same initiating device circuit or signaling line circuit are in an alarm state.
(h) Initiating devices, supervisory	
(1) Control valve switch	Valve shall be operated and signal receipt shall be verified to be within the first two revolutions of the hand wheel or within one-fifth of the travel distance, or per the manufacturer's published instructions.
(2) High- or low-air pressure switch	Switch shall be operated. Receipt of signal obtained where the required pressure is increased or decreased a maximum 70 kPa (10 psi) from the required pressure level shall be verified.
(3) Room temperature switch	Switch shall be operated. Receipt of signal to indicate the decrease in room temperature to 4.4°C (40°F) and its restoration to above 4.4°C (40°F) shall be verified.
(4) Water level switch	Switch shall be operated. Receipt of signal indicating the water level raised or lowered 76.2 mm (3 in.) from the required level within a pressure tank, or 305 mm (12 in.) from the required level of a nonpressure tank, shall be verified, as shall its restoral to required level.
(5) Water temperature switch	Switch shall be operated. Receipt of signal to indicate the decrease in water temperature to 4.4°C (40°F) and its restoration to above 4.4°C (40°F) shall be verified.
(i) Mechanical, electrosonic, or pressure-type waterflow device	Water shall be flowed through an inspector's test connection indicating the flow of water equal to that from a single sprinkler of the smallest orifice size installed in the system for wet-pipe systems, or an alarm test bypass connection for dry-pipe, pre-action, or deluge systems in accordance with NFPA 25, *Standard for the Inspection, Testing, and Maintenance of Water-Based Fire Protection Systems*.
(j) Multi-sensor detector or multi-criteria detector or combination detector	
	(1) Each of the detection principles present within the detector (e.g. smoke/heat/CO, etc.) shall be tested independently for the specific detection principle regardless of the configuration status at the time of testing. Each detector shall also be tested in accordance with the published manufacturer's instructions. (2) Individual sensors shall be tested together if the technology allows individual sensor responses to be verified. (3) Tests shall be performed as described for the respective devices by introduction of the physical phenomena to the sensing chamber of element, and an electronic check (magnets, analogue values, etc.) is not sufficient to comply with this requirement. (4) The result of each sensor test shall be confirmed. This shall be through indication at the detector or control unit. (5) Where individual sensors cannot be tested individually the primary sensor shall be tested[d] (6) All tests and results shall be recorded.
15. Alarm Notification Appliances	
(a) Audible	Sound pressure level shall be measured with sound level meter meeting ANSI S1.4a, *Specifications for Sound Level Meters*, Type 2 requirements. Levels throughout protected area shall be measured and recorded. The sound level meter shall be set in accordance with ANSI S3.41, *American National Standard Audible Evacuation Signal*, using the time-weighted characteristic F (FAST). Record the maximum output when the audible emergency evacuation signal is on.

(continues)

Copyright National Fire Protection Association
Provided by IHS under license with NFPA
No reproduction or networking permitted without license from IHS
Not for Resale

Table 10.4.2.2 *Continued*

Device	Method
15. Alarm Notification Appliances *(continued)*	
(b) Audible textural notification appliances (speakers and other appliances to convey voice messages)	Sound pressure level shall be measured with sound level meter meeting ANSI S1.4a, *Specifications for Sound Level Meters*, Type 2 requirements. Levels throughout protected area shall be measured and recorded. The sound level meter shall be set in accordance with ANSI S3.41, *American National Standard Audible Evacuation Signal*, using the time-weighted characteristic F (FAST). The maximum output shall be recorded when the audible emergency evacuation signal is on. Audible information shall be verified to be distinguishable and understandable. In locations where voice intelligibility is required, it shall be verified by one of the following methods: (1) Use of subject-based test methods as described in ANSI S3.2, *Method for Measuring the Intelligibility of Speech Over Communications Systems* (2) Use of methods and instruments that measure certain physical parameters and provide a common intelligibility scale score as described in IEC 60849, *Sound systems for emergency purposes* (3) Use of other methods acceptable to the authority having jurisdiction The use of test methods that provide a common intelligibility scale score shall be permitted for use in existing systems but shall not require revisions to systems that were designed prior to the 2002 edition of this Code.
(c) Visible	Test shall be performed in accordance with the manufacturer's published instructions. Appliance locations shall be verified to be per approved layout, and it shall be confirmed that no floor plan changes affect the approved layout. It shall be verified that the candela rating marking agrees with the approved drawing. It shall be confirmed that each appliance flashes.
16. Exit Marking Audible Notification Appliance	Tests shall be performed in accordance with manufacturer's published instructions.
17. Special Hazard Equipment	
(a) Abort switch (dead-man type)	Abort switch shall be operated. Correct sequence and operation shall be verified.
(b) Abort switch (recycle type)	Abort switch shall be operated. Development of correct matrix with each sensor operated shall be verified.
(c) Abort switch (special type)	Abort switch shall be operated. Correct sequence and operation in accordance with authority having jurisdiction shall be verified. Sequencing on as-built drawings or in owner's manual shall be observed.
(d) Cross zone detection circuit	One sensor or detector on each zone shall be operated. Occurrence of correct sequence with operation of first zone and then with operation of second zone shall be verified.
(e) Matrix-type circuit	All sensors in system shall be operated. Development of correct matrix with each sensor operated shall be verified.
(f) Release solenoid circuit	Solenoid shall be used with equal current requirements. Operation of solenoid shall be verified.
(g) Squibb release circuit	AGI flashbulb or other test light approved by the manufacturer shall be used. Operation of flashbulb or light shall be verified.
(h) Verified, sequential, or counting zone circuit	Required sensors at a minimum of four locations in circuit shall be operated. Correct sequence with both the first and second detector in alarm shall be verified.
(i) All above devices or circuits or combinations thereof	Supervision of circuits shall be verified by creating an open circuit.
18. Supervising Station Fire Alarm Systems — Transmission Equipment	
(a) All equipment	Test shall be performed on all system functions and features in accordance with the equipment manufacturer's published instructions for correct operation in conformance with the applicable sections of Chapter 8. Initiating device shall be actuated. Receipt of the correct initiating device signal at the supervising station within 90 seconds shall be verified. Upon completion of the test, the system shall be restored to its functional operating condition. If test jacks are used, the first and last tests shall be made without the use of the test jack.

--`,,```,,,,````-`-`,,`,,`,`,,`---

Copyright National Fire Protection Association
Provided by IHS under license with NFPA
No reproduction or networking permitted without license from IHS
Not for Resale

Table 10.4.2.2 *Continued*

Device	Method
(b) Digital alarm communicator transmitter (DACT)	Connection of the DACT to two separate means of transmission shall be ensured. *Exception: DACTs that are connected to a telephone line (number) that is also supervised for adverse conditions by a derived local channel.* DACT shall be tested for line seizure capability by initiating a signal while using the primary line for a telephone call. Receipt of the correct signal at the supervising station shall be verified. Completion of the transmission attempt within 90 seconds from going off-hook to on-hook shall be verified. The primary line from the DACT shall be disconnected. Indication of the DACT trouble signal at the premises shall be verified as well as transmission to the supervising station within 4 minutes of detection of the fault. The secondary means of transmission from the DACT shall be disconnected. Indication of the DACT trouble signal at the premises shall be verified as well as transmission to the supervising station within 4 minutes of detection of the fault. The DACT shall be caused to transmit a signal to the DACR while a fault in the primary telephone number is simulated. Utilization of the secondary telephone number by the DACT to complete the transmission to the DACR shall be verified.
(c) Digital alarm radio transmitter (DART)	The primary telephone line shall be disconnected. Transmission of a trouble signal to the supervising station by the DART within 4 minutes shall be verified.
(d) McCulloh transmitter	Initiating device shall be actuated. Production of not less than three complete rounds of not less than three signal impulses each by the McCulloh transmitter shall be verified. If end-to-end metallic continuity is present and with a balanced circuit, each of the following four transmission channel fault conditions shall be caused in turn, and receipt of correct signals at the supervising station shall be verified: (1) Open (2) Ground (3) Wire-to-wire short (4) Open and ground If end-to-end metallic continuity is not present and with a properly balanced circuit, each of the following three transmission channel fault conditions shall be caused in turn, and receipt of correct signals at the supervising station shall be verified: (1) Open (2) Ground (3) Wire-to-wire short
(e) Radio alarm transmitter (RAT)	A fault between elements of the transmitting equipment shall be caused. Indication of the fault at the protected premises shall be verified, or it shall be verified that a trouble signal is transmitted to the supervising station.
19. Supervising Station Fire Alarm Systems — Receiving Equipment	
(a) All equipment	Tests shall be performed on all system functions and features in accordance with the equipment manufacturer's published instructions for correct operation in conformance with the applicable sections of Chapter 8. Initiating device shall be actuated. Receipt of the correct initiating device signal at the supervising station within 90 seconds shall be verified. Upon completion of the test, the system shall be restored to its functional operating condition. If test jacks are used, the first and last tests shall be made without the use of the test jack.
(b) Digital alarm communicator receiver (DACR)	Each telephone line (number) shall be disconnected in turn from the DACR, and audible and visual annunciation of a trouble signal in the supervising station shall be verified. A signal shall be caused to be transmitted on each individual incoming DACR line at least once every 24 hours. Receipt of these signals shall be verified.

(continues)

Copyright National Fire Protection Association
Provided by IHS under license with NFPA
No reproduction or networking permitted without license from IHS
Not for Resale

Table 10.4.2.2 *Continued*

Device	Method
19. Supervising Station Fire Alarm Systems — Receiving Equipment *(continued)*	
(c) Digital alarm radio receiver (DARR)	The following conditions of all DARRs on all subsidiary and repeater station receiving equipment shall be caused. Receipt at the supervising station of correct signals for each of the following conditions shall be verified: (1) AC power failure of the radio equipment (2) Receiver malfunction (3) Antenna and interconnecting cable failure (4) Indication of automatic switchover of the DARR (5) Data transmission line failure between the DARR and the supervising or subsidiary station
(d) McCulloh systems	The current on each circuit at each supervising and subsidiary station under the following conditions shall be tested and recorded: (1) During functional operation (2) On each side of the circuit with the receiving equipment conditioned for an open circuit A single break or ground condition shall be caused on each transmission channel. If such a fault prevents the functioning of the circuit, receipt of a trouble signal shall be verified. Each of the following conditions at each of the supervising or subsidiary stations and all repeater station radio transmitting and receiving equipment shall be caused; receipt of correct signals at the supervising station shall be verified: (1) RF transmitter in use (radiating) (2) AC power failure supplying the radio equipment (3) RF receiver malfunction (4) Indication of automatic switchover
(e) Radio alarm supervising station receiver (RASSR) and radio alarm repeater station receiver (RARSR)	Each of the following conditions at each of the supervising or subsidiary stations and all repeater station radio transmitting and receiving equipment shall be caused; receipt of correct signals at the supervising station shall be verified: (1) AC power failure supplying the radio equipment (2) RF receiver malfunction (3) Indication of automatic switchover, if applicable
(f) Private microwave radio systems	Each of the following conditions at each of the supervising or subsidiary stations and all repeater station radio transmitting and receiving equipment shall be caused; receipt of correct signals at the supervising station shall be verified: (1) RF transmitter in use (radiating) (2) AC power failure supplying the radio equipment (3) RF receiver malfunction (4) Indication of automatic switchover
20. Emergency Communications Equipment	
(a) Amplifier/tone generators	Correct switching and operation of backup equipment shall be verified.
(b) Call-in signal silence	Function shall be operated and receipt of correct visual and audible signals at control unit shall be verified.
(c) Off-hook indicator (ring down)	Phone set shall be installed or phone shall be removed from hook and receipt of signal at control unit shall be verified.
(d) Phone jacks	Phone jack shall be visually inspected and communications path through jack shall be initiated.
(e) Phone set	Each phone set shall be activated and correct operation shall be verified.
(f) System performance	System shall be operated with a minimum of any five handsets simultaneously. Voice quality and clarity shall be verified.
21. Combination Systems	
(a) Fire extinguisher monitoring device/system	Communication between the device connecting the fire extinguisher monitoring device/system and the fire alarm control unit shall be tested to ensure proper signals are received at the FACU and remote annunciator (s) if applicable.
(b) Carbon monoxide detectors	Functional tests shall be conducted according to manufacturer's published instructions.

Copyright National Fire Protection Association
Provided by IHS under license with NFPA
No reproduction or networking permitted without license from IHS
Not for Resale

Table 10.4.2.2 *Continued*

Device	Method
22. Interface Equipment	Interface equipment connections shall be tested by operating or simulating the equipment being supervised. Signals required to be transmitted shall be verified at the control unit. Test frequency for interface equipment shall be the same as the frequency required by the applicable NFPA standard(s) for the equipment being supervised.
23. Fire Safety Functions	Fire safety functions (i.e., fan control, smoke damper operation, elevator recall, elevator power shutdown, door holder release, door unlocking, etc.) shall be tested by operating or simulating alarm signals. Testing frequency for fire safety functions shall be the same as the frequency required for the initiating device that activates the fire safety function.
24. Guard's Tour Equipment	The device shall be tested in accordance with the manufacturer's published instructions.
25. Special Procedures	
(a) Alarm verification	Time delay and alarm response for smoke detector circuits identified as having alarm verification shall be verified.
(b) Multiplex systems	Communications between sending and receiving units under both primary and secondary power shall be verified. Communications between sending and receiving units under open circuit and short circuit trouble conditions shall be verified. Communications between sending and receiving units in all directions where multiple communications pathways are provided shall be verified. If redundant central control equipment is provided, switchover and all required functions and operations of secondary control equipment shall be verified. All system functions and features shall be verified in accordance with manufacturer's published instructions.
26. Low-Power Radio (Wireless Systems)	The following procedures describe additional acceptance and reacceptance test methods to verify wireless protection system operation: (1) The manufacturer's published instructions and the as-built drawings provided by the system supplier shall be used to verify correct operation after the initial testing phase has been performed by the supplier or by the supplier's designated representative. (2) Starting from the functional operating condition, the system shall be initialized in accordance with the manufacturer's published instructions. A test shall be conducted to verify the alternative path, or paths, by turning off or disconnecting the primary wireless repeater. The alternative communications path shall exist between the wireless control unit and peripheral devices used to establish initiation, indication, control, and annunciation. The system shall be tested for both alarm and trouble conditions. (3) Batteries for all components in the system shall be checked monthly. If the control unit checks all batteries and all components daily, the system shall not require monthly testing of the batteries.

[a]Example: 4000 mAh × ½₅ = 160 mA charging current at 25°C (77°F).

[b]The voltmeter sensitivity has been changed from 1000 ohms per volt to 100 ohms per volt so that false ground readings (caused by induced voltages) are minimized.

[c]Fusible thermal link detectors are commonly used to close fire doors and fire dampers. They are actuated by the presence of external heat, which causes a solder element in the link to fuse, or by an electric thermal device, which, when energized, generates heat within the body of the link, causing the link to fuse and separate.

•

[d]For example, it may not be possible to individually test the heat sensor in a thermally enhanced smoke detector.

-

--`,,```,,,,````-`-`,,`,,`,`,,`---

Copyright National Fire Protection Association
Provided by IHS under license with NFPA
No reproduction or networking permitted without license from IHS
Not for Resale

Table 10.4.4 Testing Frequencies

Component	Initial/ Reacceptance	Monthly	Quarterly	Semiannually	Annually	Table 10.4.2.2 Reference
1. Control Equipment — Building Systems Connected to Supervising Station						1, 7, 16, 17
(a) Functions	X	—	—	—	X	—
(b) Fuses	X	—	—	—	X	—
(c) Interfaced equipment	X	—	—	—	X	—
(d) Lamps and LEDs	X	—	—	—	X	—
(e) Primary (main) power supply	X	—	—	—	X	—
(f) Transponders	X	—	—	—	X	—
2. Control Equipment — Building Systems Not Connected to a Supervising Station	—	—	—	—	—	1
(a) Functions	X	—	X	—	—	—
(b) Fuses	X	—	X	—	—	—
(c) Interfaced equipment	X	—	X	—	—	—
(d) Lamps and LEDs	X	—	X	—	—	—
(e) Primary (main) power supply	X	—	X	—	—	—
(f) Transponders	X	—	X	—	—	—
3. Engine-Driven Generator — Central Station Facilities and Fire Alarm Systems	X	X	—	—	—	—
4. Engine-Driven Generator — Public Fire Alarm Reporting Systems	X (weekly)	—	—	—	—	—
5. Batteries — Central Station Facilities						
(a) Lead-acid type	—	—	—	—	—	6b
(1) Charger test (Replace battery as needed.)	X	—	—	—	X	—
(2) Discharge test (30 minutes)	X	X	—	—	—	—
(3) Load voltage test	X	X	—	—	—	—
(4) Specific gravity	X	—	—	X	—	—
(b) Nickel-cadmium type	—	—	—	—	—	6c
(1) Charger test (Replace battery as needed.)	X	—	X	—	—	—
(2) Discharge test (30 minutes)	X	—	—	—	X	—
(3) Load voltage test	X	—	—	—	X	—
(c) Sealed lead-acid type	X	X	—	—	—	6d
(1) Charger test (Replace battery within 5 years after manufacture or more frequently as needed.)	—	X	X	—	—	—
(2) Discharge test (30 minutes)	X	X	—	—	—	—
(3) Load voltage test	X	X	—	—	—	—
6. Batteries — Fire Alarm Systems						
(a) Lead-acid type	—	—	—	—	—	6b
(1) Charger test (Replace battery as needed.)	X	—	—	—	X	—
(2) Discharge test (30 minutes)	X	—	—	X	—	—
(3) Load voltage test	X	—	—	X	—	—
(4) Specific gravity	X	—	—	X	—	—
(b) Nickel-cadmium type	—	—	—	—	—	6c
(1) Charger test (Replace battery as needed.)	X	—	—	—	X	—
(2) Discharge test (30 minutes)	X	—	—	—	X	—
(3) Load voltage test	X	—	—	X	—	—
(c) Primary type (dry cell)	—	—	—	—	—	6a
(1) Age test	X	X	—	—	—	—

Copyright National Fire Protection Association
Provided by IHS under license with NFPA
No reproduction or networking permitted without license from IHS
Not for Resale

Table 10.4.4 *Continued*

Component	Initial/ Reacceptance	Monthly	Quarterly	Semiannually	Annually	Table 10.4.2.2 Reference
(d) Sealed lead-acid type	—	—	—	—	—	6d
(1) Charger test (Replace battery within 5 years after manufacture or more frequently as needed.)	X	—	—	—	X	—
(2) Discharge test (30 minutes)	X	—	—	—	X	—
(3) Load voltage test	X	—	—	X	—	—
7. Power Supply — Public Fire Alarm Reporting Systems	—	—	—	—	—	—
(a) Lead-acid type batteries	—	—	—	—	—	6b
(1) Charger test (Replace battery as needed.)	X	—	—	—	X	—
(2) Discharge test (2 hours)	X	—	X	—	—	—
(3) Load voltage test	X	—	X	—	—	—
(4) Specific gravity	X	—	—	X	—	—
(b) Nickel-cadmium type batteries	—	—	—	—	—	6c
(1) Charger test (Replace battery as needed.)	X	—	—	—	X	—
(2) Discharge test (2 hours)	X	—	—	—	X	—
(3) Load voltage test	X	—	X	—	—	—
(c) Sealed lead-acid type batteries	—	—	—	—	—	6d
(1) Charger test (Replace battery within 5 years after manufacture or more frequently if needed	X	—	—	—	X	—
(2) Discharge test (2 hours)	X	—	—	—	X	—
(3) Load voltage test	X	—	X	—	—	—
(d) Wired system — voltage tests	X (daily)	—	—	—	—	7d
8. Fiber-Optic Cable Power	X	—	—	—	X	13b
9. Control Unit Trouble Signals	X	—	—	—	X	10
10. Conductors — Metallic	X	—	—	—	—	12
11. Conductors — Nonmetallic	X	—	—	—	—	13
12. Emergency Voice/Alarm Communications Equipment	X	—	—	—	X	21
13. Retransmission Equipment (The requirements of 10.4.9 shall apply.)	X	—	—	—	—	—
14. Remote Annunciators	X	—	—	—	X	11
15. Initiating Devices	—	—	—	—	—	14
(a) Duct detectors	X	—	—	—	X	—
(b) Electromechanical releasing device	X	—	—	—	X	—
(c) Fire extinguishing system(s) or suppression system(s) switches	X	—	—	—	X	—
(d) Fire–gas and other detectors	X	—	—	—	X	—
(e) Heat detectors (The requirements of 10.4.4.4 shall apply.)	X	—	—	—	X	—
(f) Fire alarm boxes	X	—	—	—	X	—
(g) Radiant energy fire detectors	X	—	—	X	—	—
(h) System smoke detectors — functional test	X	—	—	—	X	—
(i) Smoke detectors — sensitivity testing in other than one- and two-family dwellings (The requirements of 10.4.4.2 shall apply.)	—	—	—	—	—	—

(continues)

Copyright National Fire Protection Association
Provided by IHS under license with NFPA
No reproduction or networking permitted without license from IHS
Not for Resale

Table 10.4.4 *Continued*

Component	Initial/ Reacceptance	Monthly	Quarterly	Semiannually	Annually	Table 10.4.2.2 Reference
15. Initiating Devices *(continued)*						
(j) Single- and multiple-station smoke alarms (The requirements for monthly testing in accordance with 10.4.5 shall also apply.)	X	—	—	—	X	—
(k) Single- and multiple-station heat alarms	X	—	—	—	X	—
(l) Supervisory signal devices (except valve tamper switches)	X	—	X	—	—	—
(m) Waterflow devices	X	—	—	X	—	—
(n) Valve supervisory switches	X	—	—	X	—	—
16. Guard's Tour Equipment	X	—	—	—	X	24
17. Combination Systems						
(a) Fire extinguisher monitoring device/systems	X	—	—	—	X	21a
(b) Carbon monoxide detectors/systems	X	—	—	—	X	21b
18. Interface Equipment and Fire Safety Functions	X	—	—	—	X	22, 23
19. Special Hazard Equipment	X	—	—	—	X	17
20. Alarm Notification Appliances	—	—	—	—	—	15
(a) Audible devices	X	—	—	—	X	—
(b) Audible textual notification appliances	X	—	—	—	X	—
(c) Visible devices	X	—	—	—	X	—
21. Exit Marking Notification Appliances	X	—	—	—	X	16
22. Off-Premises Transmission Equipment	X	—	X	—	—	—
23. Supervising Station Fire Alarm Systems — Transmitters	—	—	—	—	—	18
(a) DACT	X	—	—	—	X	—
(b) DART	X	—	—	—	X	—
(c) McCulloh	X	—	—	—	X	—
(d) RAT	X	—	—	—	X	—
24. Special Procedures	X	—	—	—	X	25
25. Supervising Station Fire Alarm Systems — Receivers	—	—	—	—	—	19
(a) DACR	X	X	—	—	—	—
(b) DARR	X	X	—	—	—	—
(c) McCulloh systems	X	X	—	—	—	—
(d) Two-way RF multiplex	X	X	—	—	—	—
(e) RASSR	X	X	—	—	—	—
(f) RARSR	X	X	—	—	—	—
(g) Private microwave	X	X	—	—	—	—
26. Public Fire Alarm Reporting System Transmission Equipment	—	—	—	—	—	—
(a) Publicly accessible fire alarm box	X	—	—	X	—	8a
(b) Auxiliary box	X	—	—	—	X	8b
(c) Master box						8c
(1) Manual operation	X	—	—	X	—	
(2) Auxiliary operation	X	—	—	—	X	

Copyright National Fire Protection Association
Provided by IHS under license with NFPA
No reproduction or networking permitted without license from IHS
Not for Resale

10.4.4.4.3 Within 5 years, each detector shall have been tested.

10.4.4.5* For testing addressable and analog-described devices, which are affixed to either a single, molded assembly or a twist-lock type affixed to a base, testing shall be conducted using the signaling style circuits (Styles 0.5 through 7). Analog-type detectors shall be tested with the same criteria.

10.4.5 Single- and Multiple-Station Smoke Alarms. In one- and two-family dwellings, smoke alarms and all connected appliances shall be inspected and tested in accordance with the manufacturer's published instructions at least monthly.

10.4.6 Household Fire Alarm Systems.

10.4.6.1 Testing. Household fire alarm systems shall be tested by a qualified service technician at least every 3 years according to the methods of Table 10.4.2.2.

10.4.6.2 Maintenance. Maintenance of household fire alarm systems shall be conducted according to manufacturer's published instructions.

10.4.7 Replacement of Smoke Alarms in One- and Two-Family Dwellings. Unless otherwise recommended by the manufacturer's published instructions, single- and multiple-station smoke alarms installed in one- and two-family dwellings shall be replaced when they fail to respond to operability tests, but shall not remain in service longer than 10 years from the date of manufacture.

10.4.8 Battery Replacement. Where batteries are used as a source of energy, they shall be replaced in accordance with the alarm equipment manufacturer's published instructions.

10.4.9 Circuits from Central Station. Tests of all circuits extending from the central station shall be made at intervals of not more than 24 hours.

10.4.10 Public Fire Reporting Systems.

10.4.10.1 Emergency power sources other than batteries shall be operated to supply the system for a continuous period of 1 hour at least weekly. This test shall require simulated failure of the normal power source.

10.4.10.2 Testing facilities shall be installed at the communications center and each subsidiary communications center, if used.

Exception: If satisfactory to the authority having jurisdiction, those facilities for systems leased from a nonmunicipal organization that might be located elsewhere.

10.4.11* In-Building Emergency Radio Communication Systems. In-building emergency radio communication systems shall be inspected and operationally tested in accordance with the manufacturer's published requirements by the local fire department, building owner, or a designated representative.

10.5 Maintenance.

10.5.1 Fire alarm system equipment shall be maintained in accordance with the manufacturer's published instructions.

10.5.2 The frequency of maintenance of fire alarm system equipment shall depend on the type of equipment and the local ambient conditions.

10.5.3 The frequency of cleaning of fire alarm system equipment shall depend on the type of equipment and the local ambient conditions.

10.5.4 All apparatus requiring rewinding or resetting to maintain normal operation shall be rewound or reset as promptly as possible after each test and alarm. All test signals received shall be recorded to indicate date, time, and type.

10.5.5 The retransmission means as defined in Section 8.3 shall be tested at intervals of not more than 12 hours.

Exception: If the retransmission means is the public switched telephone network, it shall be permitted to be tested weekly to confirm its operation to each public fire service communications center.

10.5.6 As a part of the testing required in 10.5.5, the retransmission signal and the time and date of the retransmission shall be recorded in the central station.

10.6 Records.

10.6.1* Permanent Records. After successful completion of acceptance tests approved by the authority having jurisdiction, the requirements in 10.6.1.1 through 10.6.1.3 shall apply.

10.6.1.1 A set of reproducible as-built installation drawings, operation and maintenance manuals, and a written sequence of operation shall be provided to the building owner or the owner's designated representative.

10.6.1.2* For software-based systems, a copy of the site-specific software shall be provided to the owner or owner's designated representative. A copy of the software shall be stored in non-volatile non-erasable, non-rewritable memory and shall be stored on-site.

10.6.1.3 The owner shall be responsible for maintaining these records for the life of the system for examination by any authority having jurisdiction. Paper or electronic media shall be permitted.

10.6.2 Maintenance, Inspection, and Testing Records.

10.6.2.1 Records shall be retained until the next test and for 1 year thereafter.

10.6.2.2 The records shall be on a medium that will survive the retention period. Paper or electronic media shall be permitted.

10.6.2.3* A record of all inspections, testing, and maintenance shall be provided that includes the following information regarding tests and all the applicable information requested in Figure 10.6.2.3:

(1) Date
(2) Test frequency
(3) Name of property
(4) Address
(5) Name of person performing inspection, maintenance, tests, or combination thereof, and affiliation, business address, and telephone number
(6) Name, address, and representative of approving agency(ies)
(7) Designation of the detector(s) tested, for example, "Tests performed in accordance with Section _____."
(8) Functional test of detectors
(9)* Functional test of required sequence of operations
(10) Check of all smoke detectors
(11) Loop resistance for all fixed-temperature, line-type heat detectors
(12) Other tests as required by the equipment manufacturer's published instructions
(13) Other tests as required by the authority having jurisdiction
(14) Signatures of tester and approved authority representative
(15) Disposition of problems identified during test (e.g., owner notified, problem corrected/successfully retested, device abandoned in place)

Copyright National Fire Protection Association
Provided by IHS under license with NFPA
No reproduction or networking permitted without license from IHS
Not for Resale

INSPECTION AND TESTING FORM

DATE: _____

TIME: _____

SERVICE ORGANIZATION

Name: _____

Address: _____

Representative: _____

License No.: _____

Telephone: _____

PROPERTY NAME (USER)

Name: _____

Address: _____

Owner Contact: _____

Telephone: _____

MONITORING ENTITY

Contact: _____

Telephone: _____

Monitoring Account Ref. No.: _____

APPROVING AGENCY

Contact: _____

Telephone: _____

TYPE TRANSMISSION

- ❑ McCulloh
- ❑ Multiplex
- ❑ Digital
- ❑ Reverse Priority
- ❑ RF
- ❑ Other (Specify) _____

SERVICE

- ❑ Weekly
- ❑ Monthly
- ❑ Quarterly
- ❑ Semiannually
- ❑ Annually
- ❑ Other (Specify) _____

Control Unit Manufacturer: _____

Model No.: _____

Circuit Styles: _____

Number of Circuits: _____

Software Rev.: _____

Last Date System Had Any Service Performed: _____

Last Date That Any Software or Configuration Was Revised: _____

ALARM-INITIATING DEVICES AND CIRCUIT INFORMATION

Quantity of Devices Installed	Circuit Style	Quantity of Devices Tested	
_____	_____	_____	Manual Fire Alarm Boxes
_____	_____	_____	Ion Detectors
_____	_____	_____	Photo Detectors
_____	_____	_____	Duct Detectors
_____	_____	_____	Heat Detectors
_____	_____	_____	Waterflow Switches
_____	_____	_____	Supervisory Switches
_____	_____	_____	Other (Specify): _____

Alarm verification feature is disabled _____ enabled _____.

© 2007 National Fire Protection Association

NFPA 72 (p. 1 of 4)

FIGURE 10.6.2.3 Example of an Inspection and Testing Form.

Copyright National Fire Protection Association
Provided by IHS under license with NFPA
No reproduction or networking permitted without license from IHS
Not for Resale

ALARM NOTIFICATION APPLIANCES AND CIRCUIT INFORMATION

Quantity of Appliances Installed	Circuit Style	Quantity of Appliances Tested	
_____	_____	_____	Bells
_____	_____	_____	Horns
_____	_____	_____	Chimes
_____	_____	_____	Strobes
_____	_____	_____	Speakers
_____	_____	_____	Other (Specify): _____

No. of alarm notification appliance circuits: _____

Are circuits monitored for integrity? ❑ Yes ❑ No

SUPERVISORY SIGNAL-INITIATING DEVICES AND CIRCUIT INFORMATION

Quantity of Devices Installed	Circuit Style	Quantity of Devices Tested	
_____	_____	_____	Building Temp.
_____	_____	_____	Site Water Temp.
_____	_____	_____	Site Water Level
_____	_____	_____	Fire Pump Power
_____	_____	_____	Fire Pump Running
_____	_____	_____	Fire Pump Auto Position
_____	_____	_____	Fire Pump or Pump Controller Trouble
_____	_____	_____	Fire Pump Running
_____	_____	_____	Generator in Auto Position
_____	_____	_____	Generator or Controller Trouble
_____	_____	_____	Switch Transfer
_____	_____	_____	Generator Engine Running
_____	_____	_____	Other: _____

SIGNALING LINE CIRCUITS

Quantity and style of signaling line circuits connected to system *(see NFPA 72, Table 6.6.1)*:

Quantity _____ Style(s) _____

SYSTEM POWER SUPPLIES

(a) Primary (Main): Nominal Voltage _____ Amps _____

Overcurrent Protection: Type _____ Amps _____

Location (of Primary Supply Panelboard): _____

Disconnecting Means Location: _____

(b) Secondary (Standby):

_____ Storage Battery: Amp-Hr Rating _____

Calculated capacity in _____ Amp-Hrs to operate system for _____ hours

Engine-driven generator dedicated to fire alarm system: _____

Location of fuel storage: _____

TYPE BATTERY

❑ Dry Cell ❑ Lead-Acid

❑ Nickel-Cadmium ❑ Other (Specify):

❑ Sealed Lead-Acid

(c) Emergency or standby system used as a backup to primary power supply, instead of using a secondary power supply:

_____ Emergency system described in NFPA 70, Article 700

_____ Legally required standby described in NFPA 70, Article 701

_____ Optional standby system described in NFPA 70, Article 702, which also meets the performance requirements of Article 700 or 701

© 2007 National Fire Protection Association

FIGURE 10.6.2.3 ***Continued***

Copyright National Fire Protection Association
Provided by IHS under license with NFPA
No reproduction or networking permitted without license from IHS
Not for Resale

PRIOR TO ANY TESTING

NOTIFICATIONS ARE MADE	Yes	No	Who	Time
Monitoring Entity	❑	❑		
Building Occupants	❑	❑		
Building Management	❑	❑		
Other (Specify)	❑	❑		
AHJ Notified of Any Impairments	❑	❑		

SYSTEM TESTS AND INSPECTIONS

TYPE	Visual	Functional	Comments
Control Unit	❑	❑	
Interface Equipment	❑	❑	
Lamps/LEDs	❑	❑	
Fuses	❑	❑	
Primary Power Supply	❑	❑	
Trouble Signals	❑	❑	
Disconnect Switches	❑	❑	
Ground-Fault Monitoring	❑	❑	

SECONDARY POWER

TYPE	Visual	Functional	Comments
Battery Condition	❑		
Load Voltage		❑	
Discharge Test		❑	
Charger Test		❑	
Specific Gravity		❑	
TRANSIENT SUPPRESSORS	❑		
REMOTE ANNUNCIATORS	❑	❑	

NOTIFICATION APPLIANCES

Audible	❑	❑	
Visible	❑	❑	
Speakers	❑	❑	
Voice Clarity		❑	

INITIATING AND SUPERVISORY DEVICE TESTS AND INSPECTIONS

Loc. & S/N	Device Type	Visual Check	Functional Test	Factory Setting	Measured Setting	Pass	Fail
		❑	❑			❑	❑
		❑	❑			❑	❑
		❑	❑			❑	❑
		❑	❑			❑	❑
		❑	❑			❑	❑
		❑	❑			❑	❑

Comments: _____

© 2007 National Fire Protection Association

FIGURE 10.6.2.3 ***Continued***

Copyright National Fire Protection Association
Provided by IHS under license with NFPA
No reproduction or networking permitted without license from IHS
Not for Resale

EMERGENCY COMMUNICATIONS EQUIPMENT	Visual	Functional	Comments
Phone Set	❑	❑	
Phone Jacks	❑	❑	
Off-Hook Indicator	❑	❑	
Amplifier(s)	❑	❑	
Tone Generator(s)	❑	❑	
Call-in Signal	❑	❑	
System Performance	❑	❑	

COMBINATION SYSTEMS	Visual	Device Operation	Simulated Operation
Fire Extinguisher Monitoring Device/System	❑	❑	❑
Carbon Monoxide Detector/System	❑	❑	❑
(Specify) _____	❑	❑	❑
INTERFACE EQUIPMENT			
(Specify) _____	❑	❑	❑
(Specify) _____	❑	❑	❑
(Specify) _____	❑	❑	❑
SPECIAL HAZARD SYSTEMS			
(Specify) _____	❑	❑	❑
(Specify) _____	❑	❑	❑
(Specify) _____	❑	❑	❑

Special Procedures: _____

_____

Comments: _____

_____

SUPERVISING STATION MONITORING	Yes	No	Time	Comments
Alarm Signal	❑	❑		
Alarm Restoration	❑	❑		
Trouble Signal	❑	❑		
Trouble Signal Restoration	❑	❑		
Supervisory Signal	❑	❑		
Supervisory Restoration	❑	❑		

NOTIFICATIONS THAT TESTING IS COMPLETE	Yes	No	Who	Time
Building Management	❑	❑		
Monitoring Agency	❑	❑		
Building Occupants	❑	❑		
Other (Specify)	❑	❑		

The following did not operate correctly: _____

_____

System restored to normal operation: Date: _____ Time: _____

THIS TESTING WAS PERFORMED IN ACCORDANCE WITH APPLICABLE NFPA STANDARDS.

Name of Inspector: _____ Date: _____ Time: _____

Signature: _____

Name of Owner or Representative: _____ Date: _____ Time: _____

Signature: _____

© 2007 National Fire Protection Association *NFPA 72* (p. 4 of 4)

FIGURE 10.6.2.3 ***Continued***

--`,,```,,,,````-`-`,,`,,`,`,,`---

Copyright National Fire Protection Association
Provided by IHS under license with NFPA
No reproduction or networking permitted without license from IHS
Not for Resale

10.6.3 Supervising Station Records. For supervising station fire alarm systems, records pertaining to signals received at the supervising station that result from maintenance, inspection, and testing shall be maintained for not less than 12 months. Upon request, a hard copy record shall be provided to the authority having jurisdiction. Paper or electronic media shall be permitted.

10.6.4 Simulated Operation Note. If the operation of a device, circuit, fire alarm control unit function, or special hazard system interface is simulated, it shall be noted on the certificate that the operation was simulated, and the certificate shall indicate by whom it was simulated.

10.7 Mass Notification Systems. See Annex E.

Chapter 11 Single- and Multiple-Station Alarms and Household Fire Alarm Systems

11.1 Application.

11.1.1* The performance, selection, installation, operation, and use of single- and multiple-station alarms and household fire alarm systems shall comply with the requirements of this chapter.

11.1.2* Smoke and heat alarms shall be installed in all occupancies where required by applicable laws, codes, or standards.

11.1.3 The requirements of Chapter 4 through Chapter 9 shall not apply unless otherwise indicated.

11.1.4* The requirements of this chapter shall not apply to installations in manufactured homes.

11.1.5 This chapter shall apply to the life safety of occupants and not to the protection of property.

11.2* Purpose. Fire-warning equipment for residential occupancies shall provide a reliable means to notify the occupants of the presence of a threatening fire and the need to escape to a place of safety before such escape might be impeded by untenable conditions in the normal path of egress.

11.3 Basic Requirements.

11.3.1 All devices, combinations of devices, and equipment to be installed in conformity with this chapter shall be approved or listed for the purposes for which they are intended.

11.3.2 Fire warning equipment shall be installed in accordance with the listing and manufacturer's published instructions.

11.3.3* The installation of smoke alarms or fire alarm systems or combinations of these shall comply with the requirements of this chapter and shall satisfy the minimum requirements for number and location of smoke alarms or smoke detectors by one of the following arrangements:

(1) The required minimum number and location of smoke detection devices shall be satisfied (independently) through the installation of smoke alarms. The installation of additional smoke alarms shall be permitted. The installation of additional system-based smoke detectors including partial or complete duplication of the smoke alarms satisfying the required minimum shall be permitted.

(2) The required minimum number and location of smoke detection devices shall be satisfied (independently) through the installation of system smoke detectors. The installation of additional smoke detectors shall be permitted. The installation of additional smoke alarms including partial or complete duplication of the smoke detectors satisfying the required minimum shall be permitted.

11.3.4 Supplementary functions, including the extension of an alarm beyond the residential occupancy, shall be permitted and shall not interfere with the performance requirements of this chapter.

11.3.5* Fire-warning equipment to be installed in residential occupancies shall produce the audible emergency evacuation signal described in ANSI S3.41, *American National Standard Emergency Evacuation Signal*, whenever the intended response is to evacuate the building.

11.3.5.1 The audible emergency evacuation signal shall be permitted to be used for other devices as long as the desired response is immediate evacuation.

11.3.5.2* Fire warning equipment producing the audible emergency evacuation signal shall be permitted to incorporate voice notification under either or both of the following conditions:

(1) Where the voice message is contained completely within the 1.5-second pause period of the audible emergency evacuation signal
(2) Where the voice message complies with (a) and (b) as follows:
   (a) The voice message is first preceded by a minimum of eight cycles of the audible emergency evacuation signal
   (b) The voice message periodically interrupts the signal for no longer than 10 seconds followed by a minimum of two cycles of the audible emergency evacuation signal between each voice message. The initial eight-cycle period shall not be required to be repeated.

11.3.6 Audible fire alarm signals shall meet the performance requirements of 7.4.2 and 7.4.4.

11.3.7 When visible appliances are provided, they shall meet the requirements of Section 7.5. Since hearing deficits are often not apparent, the responsibility for advising the appropriate person(s) of the existence of this deficit shall be that of the hearing-impaired party.

11.3.8* Signals from notification appliances shall not be required to be synchronized.

11.4* Assumptions.

11.4.1 Occupants. The requirements of this chapter shall assume that occupants are not intimate with the ignition and are capable of self-rescue.

11.4.2 Escape Route.

11.4.2.1 The requirements of this chapter shall assume that the occupants have an escape plan.

11.4.2.2 An escape route shall be assumed to be available to occupants and to be unobstructed prior to the event of the fire.

11.4.3* Equipment. The performance of fire-warning equipment discussed in this chapter shall depend on such equipment being properly selected, installed, operated, tested, and maintained in accordance with the provisions of this Code

Copyright National Fire Protection Association
Provided by IHS under license with NFPA
No reproduction or networking permitted without license from IHS
Not for Resale

and with the manufacturer's published instructions provided with the equipment.

11.5 Detection and Notification. The use of fire alarm system smoke detectors and notification appliances shall be permitted to meet the fire warning requirements for smoke alarms specified in 11.5.1.

11.5.1* Required Detection

11.5.1.1* Where required by applicable laws, codes, or standards for a specific type of occupancy, approved single- and multiple-station smoke alarms shall be installed as follows:

(1)*In all sleeping rooms and guest rooms
(2)*Outside of each separate dwelling unit sleeping area, within 6.4 m (21 ft) of any door to a sleeping room, the distance measured along a path of travel
(3) On every level of a dwelling unit, including basements
(4) On every level of a residential board and care occupancy (small facility), including basements and excluding crawl spaces and unfinished attics
(5)*In the living area(s) of a guest suite
(6) In the living area(s) of a residential board and care occupancy (small facility)

11.5.1.2 Where the area addressed in 11.5.1.1(2) is separated from the adjacent living areas by a door, a smoke alarm shall be installed in the area between the door and the sleeping rooms, and additional alarms shall be installed on the living area side of the door as specified by 11.5.1.1 and 11.5.1.3.

11.5.1.3 In addition to the requirements of 11.5.1.1(1) through 11.5.1.1(3), where the interior floor area for a given level of a dwelling unit, excluding garage areas, is greater than 93 m^2 (1000 ft^2), smoke alarms shall be installed per 11.5.1.3.1 and 11.5.1.3.2.

11.5.1.3.1* All points on the ceiling shall have a smoke alarm within a distance of 9.1 m (30 ft) travel distance or shall have an equivalent of one smoke alarm per 46.5 m^2 (500 ft^2) of floor area. One smoke alarm per 46.5 m^2 (500 ft^2) is evaluated by dividing the total interior square footage of floor area per level by 46.5 m^2 (500 ft^2).

11.5.1.3.2 Where dwelling units include great rooms or vaulted/cathedral ceilings extending over multiple floors, smoke alarms located on the upper floor that are intended to protect the aforementioned area shall be permitted to be considered as part of the lower floor(s) protection scheme used to meet the requirements of 11.5.1.3.1.

11.5.2 Required Occupant Notification.

11.5.2.1 Fire warning equipment used to provide required or optional detection shall produce audible fire alarm signals that comply with 11.5.2.1.1 or 11.5.2.1.2.

11.5.2.1.1* Smoke and Heat Alarms. Unless exempted by applicable laws, codes, or standards, smoke or heat alarms used to provide a fire warning function, and when two or more alarms are installed within a dwelling unit, suite of rooms, or similar area, shall be arranged so that the operation of any smoke or heat alarm causes all alarms within these locations to sound.

Exception: The arrangement for all alarms to sound shall not be required for mechanically powered single-station heat alarms.

11.5.2.1.2 Household Fire Alarm System. Where a household fire alarm system is used to provide a fire warning function, notification appliances shall be installed to meet the performance requirements of 7.4.2 and 7.4.4.

11.5.2.2* Unless otherwise permitted by the authority having jurisdiction, audible fire alarm signals shall sound only in an individual dwelling unit, suite of rooms, or similar area and shall not be arranged to operate fire warning equipment or fire alarm systems outside these locations. Remote annunciation shall be permitted.

11.6 Power Supplies.

11.6.1 Smoke and Heat Alarms. Smoke and heat alarms shall be powered by one of the following means:

(1) A commercial light and power source along with a secondary power source that is capable of operating the device for at least 24 hours in the normal condition followed by 4 minutes of alarm.
(2) If a commercial light and power source is not normally available, a noncommercial ac power source along with a secondary power source that is capable of operating the device for at least 7 days in the normal condition followed by 4 minutes of alarm.
(3) A nonrechargeable, nonreplaceable primary battery that is capable of operating the device for at least 10 years in the normal condition followed by 4 minutes of alarm, followed by 7 days of trouble.
(4) If a battery primary power supply is specifically permitted, a battery meeting the requirements of 11.6.6 (nonrechargeable primary battery) or the requirements of 11.6.7 (rechargeable primary battery) shall be used.
(5) A suitable spring-wound mechanism for the nonelectrical portion of a listed single-station alarm. A visible indication shall be provided to show that sufficient operating power is not available.

11.6.2 Household Fire Alarm Systems. Power for household fire alarm systems shall comply with the following requirements:

(1) Household fire alarm systems shall have two independent power sources consisting of a primary source that uses commercial light and power and a secondary source that consists of a rechargeable battery.
(2) The secondary source shall be capable of operating the system for at least 24 hours in the normal condition followed by 4 minutes of alarm.
(3) The secondary power source shall be supervised and shall cause a distinctive audible and visible trouble signal upon removal or disconnection of a battery or a low-battery condition.
(4) A rechargeable battery used as a secondary power source shall meet the following criteria:
    (a) Be automatically recharged by an ac circuit of the commercial light and power source
    (b) Be recharged within 48 hours
    (c) Provide a distinctive audible trouble signal before the battery is incapable of operating the device(s) for alarm purposes
(5) Low-power wireless systems shall comply with the performance criteria of Section 6.17.

11.6.3 AC Primary Power Source. The ac power source shall comply with the following conditions:

(1) A visible "power on" indicator shall be provided.
(2) All electrical systems designed to be installed by other than a qualified electrician shall be powered from a source not in

Copyright National Fire Protection Association
Provided by IHS under license with NFPA
No reproduction or networking permitted without license from IHS
Not for Resale

excess of 30 volts that meets the requirements for power-limited fire alarm circuits as defined in NFPA 70, *National Electrical Code*, Article 760.

(3) A restraining means shall be used at the plug-in of any cord-connected installation.

(4) AC primary (main) power shall be supplied either from a dedicated branch circuit or the unswitched portion of a branch circuit also used for power and lighting.

(5) Operation of a switch (other than a circuit breaker) or a ground-fault circuit-interrupter shall not cause loss of primary (main) power. Smoke alarms powered by AFCI-protected circuits shall have a secondary power source.

(6) Neither loss nor restoration of primary (main) power shall cause an alarm signal.

Exception: An alarm signal shall be permitted but shall not exceed 2 seconds.

(7) Where a secondary (standby) battery is provided, the primary (main) power supply shall be of sufficient capacity to operate the system under all conditions of loading with any secondary (standby) battery disconnected or fully discharged.

11.6.4 Secondary (Standby) Power Source. Where alarms include a battery that is used as a secondary power source, the following conditions shall be met:

(1) The secondary power source shall be supervised and shall cause a distinctive audible or visible trouble signal upon removal or disconnection of a battery or a low-battery condition.

(2) Acceptable replacement batteries shall be clearly identified by the manufacturer's name and model number on the unit near the battery compartment.

(3) A rechargeable battery used as a secondary power source shall meet the following criteria:

(a) Be automatically recharged by the primary power source

(b) Be recharged within 4 hours where power is provided from a circuit that can be switched on or off by means other than a circuit breaker or within 48 hours where power is provided from a circuit that cannot be switched on or off by means other than a circuit breaker

(c) Provide a distinctive audible trouble signal before the battery is incapable of operating the device(s) for alarm purposes

(d) At the battery condition at which a trouble signal is obtained, be capable of producing an alarm signal for at least 4 minutes followed by not less than 7 days of trouble signal operation

(e) Produce an audible trouble signal at least once every minute for 7 consecutive days

11.6.5 Notification Appliance (with Smoke or Heat Alarm). If a visible notification appliance is used in conjunction with a smoke or heat alarm application for compliance with 11.3.7, the notification appliance shall not be required to be supplied with a secondary power source.

11.6.6 Primary Power Source (Nonrechargeable Battery). If smoke alarms are powered by a primary battery, the battery shall be monitored to ensure the following conditions are met:

(1) All power requirements are met for at least 1 year of battery life, including weekly testing.

(2) A distinctive audible trouble signal before the battery is incapable of operating (from causes such as aging or terminal corrosion) the device(s) for alarm purposes.

(3) For a unit employing a lock-in alarm feature, automatic transfer is provided from alarm to a trouble condition.

(4) At the battery voltage at which a trouble signal is obtained, the unit is capable of producing an alarm signal for at least 4 minutes followed by not less than 7 days of trouble signal operation.

(5) The audible trouble signal is produced at least once every minute for 7 consecutive days.

(6) Acceptable replacement batteries are clearly identified by the manufacturer's name and model number on the unit near the battery compartment.

(7) A noticeable, visible indication is displayed when a primary battery is removed from the unit.

11.6.7 Primary Power Source (Rechargeable Battery). If smoke alarms are powered by a rechargeable battery, the following conditions shall be met:

(1) The battery shall, with proper charging, be able to power the alarm for a life of 1 year.

(2) The battery shall be automatically recharged by an ac circuit of the commercial light and power source.

(3) The battery shall be recharged within 4 hours where power is provided from a circuit that can be switched on or off by means other than a circuit breaker or within 48 hours where power is provided from a circuit that cannot be switched on or off by means other than a circuit breaker.

(4) A distinctive audible trouble signal shall sound before the battery is incapable of operating the device(s) for alarm purposes.

(5) For a unit employing a lock-in alarm feature, automatic transfer shall be provided from alarm to a trouble condition.

(6) At the battery condition at which a trouble signal is obtained, the unit shall be capable of producing an alarm signal for at least 4 minutes followed by not less than 7 days of trouble signal operation.

(7) The audible trouble signal shall be produced at least once every minute for 7 consecutive days.

11.6.8 Secondary (Standby) Non-Battery Power Source. Where alarms include a secondary power source (non-battery), the following conditions shall be met:

(1) The secondary power source shall be supervised and shall cause a distinctive audible or visible trouble signal upon depletion or failure.

(2) A distinctive audible trouble signal shall be provided before the power source is incapable of operating the device(s) for alarm purposes.

(3) At a power source condition at which a trouble signal is obtained, the power source shall be capable of producing an alarm signal for at least 4 minutes followed by not less than 7 days of trouble signal operation.

(4) The audible trouble signal shall be produced at least once every minute for 7 consecutive days.

(5) A rechargeable secondary power source shall meet the following criteria:

(a) Be automatically recharged

(b) Be recharged within 4 hours where power is provided from a circuit that can be switched on or off by means other than a circuit breaker or within 48 hours where power is provided from a circuit that cannot be switched on or off by means other than a circuit breaker

11.7 Equipment Performance.

11.7.1 Self Diagnostic. Any failure of any nonreliable or short-life component that renders the detector inoperable

Copyright National Fire Protection Association
Provided by IHS under license with NFPA
No reproduction or networking permitted without license from IHS
Not for Resale

shall result in a trouble signal or otherwise be apparent to the occupant of the living unit without the need for test.

11.7.2* Smoke Alarms and System Smoke Detectors. Each device shall detect abnormal quantities of smoke, shall operate in the normal environmental conditions, and shall be in compliance with applicable standards such as ANSI/UL 268, *Standard for Safety Smoke Detectors for Fire Alarm Signaling Systems*, or ANSI/UL 217, *Standard for Safety Single and Multiple Station Smoke Alarms*.

11.7.3* Heat Detectors and Heat Alarms.

11.7.3.1 Each heat detector and heat alarm, including a heat detector or heat alarm integrally mounted on a smoke detector or smoke alarm, shall detect abnormally high temperature or rate-of-temperature rise, and all such detectors shall be listed for not less than 15 m (50 ft) spacing.

11.7.3.2* Fixed-temperature detectors or alarms shall have a temperature rating at least 14°C (25°F) above the normal ambient temperature and shall not be rated 28°C (50°F) higher than the maximum anticipated ambient temperature in the room or space where installed.

11.7.4 Operability. Single- and multiple-station alarms, including heat alarms, shall be provided with a convenient means for testing its operability by the occupant, owner, or other responsible parties.

11.7.5 System Control Equipment.

11.7.5.1 The system control equipment shall be automatically restoring upon restoration of electrical power.

11.7.5.2 The system control equipment shall be of a type that "locks in" on an alarm condition. Smoke detection circuits shall not be required to lock in.

11.7.5.3 If a reset switch is provided, it shall be of a self-restoring (momentary operation) type.

11.7.5.4 A means for silencing the trouble notification appliance(s) shall be permitted only if the following conditions are satisfied:

(1) The means is key-operated, located within a locked enclosure, or arranged to provide equivalent protection against unauthorized use.
(2) The means transfers the trouble indication to an identified lamp or other acceptable visible indicator, and the visible indication persists until the trouble condition has been corrected.

11.7.5.5 A means for turning off activated alarm notification appliances shall be permitted only if the following conditions are satisfied:

(1) The means is key-operated, located within a locked cabinet, or arranged to provide equivalent protection against unauthorized use.
(2) The means includes the provision of a visible alarm silence indication.

11.7.5.6 Household fire alarm system smoke detectors, initiating devices, and notification appliances shall be monitored for integrity so that the occurrence of a single open or single ground fault in the interconnection, which prevents normal operation of the interconnected devices, is indicated by a distinctive trouble signal.

11.7.5.7 System control equipment shall be in compliance with applicable standards such as ANSI/UL 985, *Standard for Safety Household Fire Warning System Units*, or ANSI/UL 1730, *Standard for Safety for Smoke Detector Monitors and Accessories for Individual Living Units of Multifamily Residences and Hotel/Motel Rooms*.

11.7.6 Combination System.

11.7.6.1 If designed and installed to perform additional functions, fire-warning equipment shall operate reliably and without compromise to its primary functions.

11.7.6.2 Fire signals shall take precedence over any other signal or functions, even if a non-fire signal is activated first.

11.7.6.3 Signals shall be distinctive so that a fire signal can be distinguished from signals that require different actions by the occupants.

11.7.6.4 Faults in other systems or components shall not affect the operation of the fire alarm system.

11.7.6.5 Where common wiring is employed for a combination system, the equipment for other than the fire alarm system shall be connected to the common wiring of the system so that short circuits, open circuits, grounds, or any fault in this equipment or interconnection between this equipment and the fire alarm system wiring does not interfere with the supervision of the fire alarm system or prevent alarm or trouble signal operation.

11.7.6.6 In a fire/burglar system, the operation shall be as follows:

(1) A fire alarm signal shall take precedence or be clearly recognizable over any other signal even when the non-fire alarm signal is initiated first.
(2) Distinctive alarm signals shall be used so that fire alarms can be distinguished from other functions such as burglar alarms. The use of a common-sounding appliance for fire and burglar alarms shall be permitted where distinctive signals are used.

11.7.6.7 Installations that include the connection of single- or multiple-station alarms with other input or output devices, such as but not limited to relay modules, remote signaling devices, phone dialers, security control units, heat detectors, and manual pull stations, shall be permitted, providing that an open or short circuit of the wiring leading to these input or output devices does not prevent normal operation of the single- or multiple-station alarm.

11.7.7 Low-Power Wireless Systems. Household fire alarm systems utilizing low-power wireless transmission of signals within the protected dwelling unit shall comply with the requirements of Section 6.17.

11.7.8 Supervising Stations.

11.7.8.1 Means to transmit alarm signals to a constantly attended, remote monitoring location shall perform as described in Chapter 8 except as modified by 11.7.8.1.1 through 11.7.8.1.3.

11.7.8.1.1 The DACT serving the protected premises shall only require a single telephone line and shall only require a call to a single DACR number.

11.7.8.1.2 The DACT test signals shall be transmitted at least monthly.

--`,,```,,,,````-`-`,,`,,`,`,,`---

Copyright National Fire Protection Association
Provided by IHS under license with NFPA
No reproduction or networking permitted without license from IHS
Not for Resale

11.7.8.1.3 Such systems shall not be required to be certificated or placarded.

11.7.8.2* Remote monitoring locations shall be permitted to verify alarm signals prior to reporting them to the fire service, provided that the verification process does not delay the reporting by more than 90 seconds.

11.8 Installation.

11.8.1 General.

11.8.1.1 All equipment shall be installed in accordance with the manufacturer's published instructions and applicable electrical standards.

11.8.1.2 All devices shall be so located and mounted that accidental operation is not caused by jarring or vibration.

11.8.1.3 All fire-warning equipment shall be mounted so as to be supported independently of its attachment to wires.

11.8.1.4 The supplier or installing contractor shall provide the owner or other responsible parties with the following:

(1) An instruction booklet illustrating typical installation layouts
(2) Instruction charts describing the operation, method, and frequency of testing and maintenance of fire-warning equipment
(3) Printed information for establishing an emergency evacuation plan
(4) Printed information to inform owners where they can obtain repair or replacement service, and where and how parts requiring regular replacement, such as batteries or bulbs, can be obtained within 2 weeks
(5) Information noting both of the following:
    (a) Unless otherwise recommended by the manufacturer's published instructions, smoke alarms shall be replaced when they fail to respond to tests.
    (b) Smoke alarms installed in one- and and two-family dwellings shall not remain in service longer than 10 years from the date of manufacture.

11.8.2 Interconnection of Detectors or Multiple-Station Alarms.

11.8.2.1 Smoke detectors shall be connected to central controls for power, signal processing, and activation of notification appliances.

11.8.2.2* The interconnection of smoke or heat alarms shall comply with the following:

(1) Smoke or heat alarms shall not be interconnected in numbers that exceed the manufacturer's published instructions.
(2) In no case shall more than 18 initiating devices be interconnected (of which 12 can be smoke alarms) where the interconnecting means is not supervised.
(3) In no case shall more than 64 initiating devices be interconnected (of which 42 can be smoke alarms) where the interconnecting means is supervised.
(4) Smoke or heat alarms shall not be interconnected with alarms from other manufacturers unless listed as being compatible with the specific model.

11.8.2.3 A single fault on the interconnecting means between multiple-station alarms shall not prevent single-station operation of any of the interconnected alarms.

11.8.2.4 Remote notification appliance circuits of multiple-station alarms shall be capable of being tested for integrity by activation of the test feature on any interconnected alarm. Activation of the test feature shall result in the operation of all interconnected notification appliances.

11.8.3* Smoke Detectors and Smoke Alarms. Smoke alarms, smoke detectors, devices, combination of devices, and equipment shall be installed in accordance with the manufacturer's listing and published instructions, and unless specifically listed for the application, shall comply with requirements in 11.8.3.1 through 11.8.3.5.

11.8.3.1 Flat Ceilings. Smoke alarms or smoke detectors mounted on a flat ceiling shall be located no closer than 102 mm (4 in.) from the adjoining wall surface.

11.8.3.2* Peaked Ceilings. Smoke alarms or smoke detectors mounted on a peaked ceiling shall be located within 914 mm (36 in.) horizontally of the peak, but not closer than 102 mm (4 in.) vertically to the peak.

11.8.3.3* Sloped Ceilings. Smoke alarms or smoke detectors mounted on a sloped ceiling having a rise greater than 1 m in 8 m (1 ft in 8 ft) horizontally shall be located within 914 mm (36 in.) of the high side of the ceiling, but not closer than 102 mm (4 in.) from the adjoining wall surface.

11.8.3.4* Wall Mounting. Smoke alarms or smoke detectors mounted on walls shall be located not closer than 102 mm (4 in.) from the adjoining ceiling surface and not farther than 305 mm (12 in.) from the adjoining ceiling surface.

11.8.3.5 Specific Location Requirements. The installation of smoke alarms and smoke detectors shall comply with the following requirements:

(1) Smoke alarms and smoke detectors shall not be located where ambient conditions, including humidity and temperature, are outside the limits specified by the manufacturer's published instructions.
(2) Smoke alarms and smoke detectors shall not be located within unfinished attics or garages or in other spaces where temperatures can fall below 4°C (40°F) or exceed 38°C (100°F).
(3) Where the mounting surface could become considerably warmer or cooler than the room, such as a poorly insulated ceiling below an unfinished attic or an exterior wall, smoke alarms and smoke detectors shall be mounted on an inside wall.
(4) Smoke alarms and smoke detectors installed within a 6.1 m (20 ft) horizontal path of a cooking appliance shall be equipped with an alarm-silencing means or be of the photoelectric type.
(5) Smoke alarms and smoke detectors shall not be installed within a 914 mm (36 in.) horizontal path from a door to a bathroom containing a shower or tub.
(6) Smoke alarms and smoke detectors shall not be installed within a 914 mm (36 in.) horizontal path from the supply registers of a forced air heating or cooling system and shall be installed outside of the direct airflow from those registers.
(7) Smoke alarms and smoke detectors shall not be installed within a 914 mm (36 in.) horizontal path from the tip of the blade of a ceiling-suspended (paddle) fan.
(8) Where stairs lead to other occupied levels, a smoke alarm or smoke detector shall be located so that smoke rising in the stairway cannot be prevented from reaching the smoke alarm or smoke detector by an intervening door or obstruction.

Copyright National Fire Protection Association
Provided by IHS under license with NFPA
No reproduction or networking permitted without license from IHS
Not for Resale

(9) For stairways leading up from a basement, smoke alarms or smoke detectors shall be located on the basement ceiling near the entry to the stairs.
(10) *For tray-shaped ceilings (coffered ceiling) smoke alarms and smoke detectors shall be installed on the highest portion of the ceiling or on the sloped portion of the ceiling within 305 mm (12 in.) vertically down from the highest point.

11.8.4* Heat Detectors and Heat Alarms.

11.8.4.1 On smooth ceilings, heat detectors and heat alarms shall be installed within the strict limitations of their listed spacing.

11.8.4.2 For sloped ceilings having a rise greater than 1 m in 8 m (1 ft in 8 ft) horizontally, the detector or alarm shall be located within 0.9 m (3 ft) of the peak. The spacing of additional detectors or alarms, if any, shall be based on a horizontal distance measurement, not on a measurement along the slope of the ceiling.

11.8.4.3 Heat detectors or alarms shall be mounted on the ceiling at least 102 mm (4 in.) from a wall or on a wall with the top of the detector or alarm not less than 102 mm (4 in.) nor more than 305 mm (12 in.) below the ceiling.

Exception: Where the mounting surface could become considerably warmer or cooler than the room, such as a poorly insulated ceiling below an unfinished attic or an exterior wall, the detectors or alarms shall be mounted on an inside wall.

11.8.4.4 In rooms with open joists or beams, all ceiling-mounted detectors or alarms shall be located on the bottom of such joists or beams.

11.8.4.5* Detectors or alarms installed on an open-joisted ceiling shall have their smooth ceiling spacing reduced where this spacing is measured at right angles to solid joists; in the case of heat detectors or heat alarms, this spacing shall not exceed one-half of the listed spacing.

11.8.5 Wiring and Equipment. The installation of wiring and equipment shall be in accordance with the requirements of NFPA 70, *National Electrical Code*, Article 760.

11.9 Optional Functions. The following optional functions of fire-warning equipment shall be permitted:

(1) Notification of the fire department, either directly or through an alarm-monitoring service
(2) Monitoring of other safety systems, such as fire sprinklers for alarm or proper operating conditions
(3) Notification of occupants or others of potentially dangerous conditions, such as the presence of fuel gases or toxic gases such as carbon monoxide
(4) Notification of occupants or others of the activation of intrusion (burglar alarm) sensors
(5) Any other function, safety related or not, that could share components or wiring

11.10 Maintenance and Tests. Fire-warning equipment shall be maintained and tested in accordance with the manufacturer's published instructions and per the requirements of Chapter 10.

11.11 Markings and Instructions.

11.11.1 Alarms. All alarms shall be plainly marked with the following information on the unit:

(1) Manufacturer's or listee's name, address, and model number
(2) A mark or certification that the unit has been approved or listed by a testing laboratory
(3) Electrical rating (where applicable)
(4) Manufacturer's published operating and maintenance instructions
(5) Test instructions
(6) Replacement and service instructions
(7) Identification of lights, switches, meters, and similar devices regarding their function unless their function is obvious
(8) Distinction between alarm and trouble signals on units employing both
(9) The sensitivity setting for an alarm having a fixed setting (For an alarm that is intended to be adjusted in the field, the range of sensitivity shall be indicated. The marked sensitivity shall be indicated as a percent per foot obscuration level. The marking shall include a nominal value plus tolerance.)
(10) Reference to an installation diagram and owner's manual
(11) Date of manufacture in the format YEAR (in 4 digits), MONTH (in letters), and DAY (in 2 digits) located on the outside of the alarm

Exception: Where space limitations prohibit inclusion of 11.11.1(4), and 11.11.1(6), it is not prohibited for this information to be in the installation instructions instead.

11.11.2 Fire Alarm Control Unit. All household fire-warning equipment or systems shall be plainly marked with the following information on the unit:

(1) Manufacturer's or listee's name, address, and model number
(2) A mark or certification that the unit has been approved or listed by a testing laboratory
(3) Electrical rating (where applicable)
(4) Identification of all user interface components and their functions (such as, but not limited to, lights, switches, and meters) located adjacent to the component
(5) Manufacturer's published operating and maintenance instructions
(6) Test instructions
(7) Replacement and service instructions
(8) Reference to an installation wiring diagram and homeowner's manual, if not attached to control unit, by drawing number and issue number and/or date

Exception: Where space limitations prohibit inclusion of 11.11.2(5) and 11.11.2(7), it is not prohibited for this information to be in the installation instructions instead.

11.12 Mass Notification Systems. See Annex E.

Annex A Explanatory Material

Annex A is not a part of the requirements of this NFPA document but is included for informational purposes only. This annex contains explanatory material, numbered to correspond with the applicable text paragraphs.

A.1.2 Fire alarm systems intended for life safety should be designed, installed, and maintained to provide indication and warning of abnormal fire conditions. The system should alert building occupants and summon appropriate aid in adequate time to allow for occupants to travel to a safe place and for rescue operations to occur. The fire alarm system should be part of a life

Copyright National Fire Protection Association
Provided by IHS under license with NFPA
No reproduction or networking permitted without license from IHS
Not for Resale

safety plan that also includes a combination of prevention, protection, egress, and other features particular to that occupancy.

A.1.2.4 The intent of this paragraph is to make it clear that the protection requirements are derived from the applicable building or fire code, not from *NFPA 72*.

A.1.6.4 Where dimensions are expressed in millimeters and inches, it is intended that the precision of the measurement be 1 in., thus plus or minus ½ in. The conversion and presentation of dimensions in millimeters would then have a precision of 25 mm, thus plus or minus 13 mm.

A.3.2.1 Approved. The National Fire Protection Association does not approve, inspect, or certify any installations, procedures, equipment, or materials; nor does it approve or evaluate testing laboratories. In determining the acceptability of installations, procedures, equipment, or materials, the authority having jurisdiction may base acceptance on compliance with NFPA or other appropriate standards. In the absence of such standards, said authority may require evidence of proper installation, procedure, or use. The authority having jurisdiction may also refer to the listings or labeling practices of an organization that is concerned with product evaluations and is thus in a position to determine compliance with appropriate standards for the current production of listed items.

A.3.2.2 Authority Having Jurisdiction (AHJ). The phrase "authority having jurisdiction," or its acronym AHJ, is used in NFPA documents in a broad manner, since jurisdictions and approval agencies vary, as do their responsibilities. Where public safety is primary, the authority having jurisdiction may be a federal, state, local, or other regional department or individual such as a fire chief; fire marshal; chief of a fire prevention bureau, labor department, or health department; building official; electrical inspector; or others having statutory authority. For insurance purposes, an insurance inspection department, rating bureau, or other insurance company representative may be the authority having jurisdiction. In many circumstances, the property owner or his or her designated agent assumes the role of the authority having jurisdiction; at government installations, the commanding officer or departmental official may be the authority having jurisdiction.

A.3.2.3 Code. The decision to designate a standard as a "code" is based on such factors as the size and scope of the document, its intended use and form of adoption, and whether it contains substantial enforcement and administrative provisions.

A.3.2.5 Listed. The means for identifying listed equipment may vary for each organization concerned with product evaluation; some organizations do not recognize equipment as listed unless it is also labeled. The authority having jurisdiction should utilize the system employed by the listing organization to identify a listed product.

A.3.3.18 Average Ambient Sound Level. The term *average ambient sound level* is also called the equivalent A-weighted sound level measured over t hours, where t is the time period over which the measurement is made. The standard industry symbol is $L_{A.\mathrm{eq},t}$. Where a measurement is taken over a 24-hour time period, the designation would be $L_{A.\mathrm{eq}24}$.

A.3.3.22.3 Sloping Peaked-Type Ceiling. Refer to Figure A.5.6.5.4.1 for an illustration of smoke or heat detector spacing on peaked-type sloped ceilings.

A.3.3.22.4 Sloping Shed-Type Ceiling. Refer to Figure A.5.6.5.4.2 for an illustration of smoke or heat detector spacing on shed-type sloped ceilings.

A.3.3.24.3 Smooth Ceiling. Open truss constructions are not considered to impede the flow of fire products unless the upper member, in continuous contact with the ceiling, projects below the ceiling more than 100 mm (4 in.).

A.3.3.29 Certification of Personnel. This definition of *certification of personnel* applies only to municipal fire alarm systems.

A.3.3.30.3 Radio Channel. The width of the channel depends on the type of transmissions and the tolerance for the frequency of emission. Channels normally are allocated for radio transmission in a specified type for service by a specified transmitter.

A.3.3.43.4 Combination Detector. These detectors do not utilize a mathematical evaluation principle of signal processing more than a simple "or" function. Normally, these detectors provide a single response resulting from either sensing method, each of which operates independent of the other. These detectors can provide a separate and distinct response resulting from either sensing method, each of which is processed independent of the other.

A.3.3.43.7 Fixed-Temperature Detector. The difference between the operating temperature of a fixed-temperature device and the surrounding air temperature is proportional to the rate at which the temperature is rising. The rate is commonly referred to as *thermal lag*. The air temperature is always higher than the operating temperature of the device.

Typical examples of fixed-temperature sensing elements are as follows:

(1) *Bimetallic.* A sensing element comprised of two metals that have different coefficients of thermal expansion arranged so that the effect is deflection in one direction when heated and in the opposite direction when cooled.
(2) *Electrical Conductivity.* A line-type or spot-type sensing element in which resistance varies as a function of temperature.
(3) *Fusible Alloy.* A sensing element of a special composition metal (eutectic) that melts rapidly at the rated temperature.
(4) *Heat-Sensitive Cable.* A line-type device in which the sensing element comprises, in one type, two current-carrying wires separated by heat-sensitive insulation that softens at the rated temperature, thus allowing the wires to make electrical contact. In another type, a single wire is centered in a metallic tube, and the intervening space is filled with a substance that becomes conductive at a critical temperature, thus establishing electrical contact between the tube and the wire.
(5) *Liquid Expansion.* A sensing element comprising a liquid that is capable of marked expansion in volume in response to an increase in temperature.

A.3.3.43.8 Flame Detector. Flame detectors are categorized as ultraviolet, single wavelength infrared, ultraviolet infrared, or multiple wavelength infrared.

A.3.3.43.11 Multi-Criteria Detector. A multi-criteria detector is a detector that contains multiple sensing methods that respond to fire signature phenomena and utilizes mathematical evaluation principles to determine the collective status of the device and generates a single output. Typical examples of multi-criteria detectors are a combination of a heat detector with a smoke detector, or a combination rate-of-rise and fixed-temperature heat detector that evaluates both signals using an

Copyright National Fire Protection Association
Provided by IHS under license with NFPA
No reproduction or networking permitted without license from IHS
Not for Resale

algorithm to generate an output such as pre-alarm or alarm. The evaluation can be performed either at the detector or at the control unit. Other examples are detectors that include sensor combinations that respond in a predictable manner to any combination of heat, smoke, carbon monoxide, or carbon dioxide.

A.3.3.43.12 Multi-Sensor Detector. Typical examples of multisensor detectors are a combination of a heat detector with a smoke detector, or a combination rate-of-rise and fixed-temperature heat detector that evaluates both signals using an algorithm to generate an output such as pre-alarm or alarm. The evaluation can be performed either at the detector or at the control unit. Other examples are detectors that include sensor combinations that respond in a predictable manner to any combination of heat, smoke, carbon monoxide, or carbon dioxide.

A.3.3.43.17 Rate Compensation Detector. A typical example of a rate compensation detector is a spot-type detector with a tubular casing of a metal that tends to expand lengthwise as it is heated and an associated contact mechanism that closes at a certain point in the elongation. A second metallic element inside the tube exerts an opposing force on the contacts, tending to hold them open. The forces are balanced in such a way that, on a slow rate-of-temperature rise, there is more time for heat to penetrate to the inner element, which inhibits contact closure until the total device has been heated to its rated temperature level. However, on a fast rate-of-temperature rise, there is not as much time for heat to penetrate to the inner element, which exerts less of an inhibiting effect so that contact closure is achieved when the total device has been heated to a lower temperature. This, in effect, compensates for thermal lag.

A.3.3.43.18 Rate-of-Rise Detector. Typical examples of rate-of-rise detectors are as follows:

(1) *Pneumatic Rate-of-Rise Tubing.* A line-type detector comprising small-diameter tubing, usually copper, that is installed on the ceiling or high on the walls throughout the protected area. The tubing is terminated in a detector unit that contains diaphragms and associated contacts set to actuate at a predetermined pressure. The system is sealed except for calibrated vents that compensate for normal changes in temperature.
(2) *Spot-Type Pneumatic Rate-of-Rise Detector.* A device consisting of an air chamber, a diaphragm, contacts, and a compensating vent in a single enclosure. The principle of operation is the same as that described for pneumatic rate-of-rise tubing.
(3) *Electrical Conductivity–Type Rate-of-Rise Detector.* A line-type or spot-type sensing element in which resistance changes due to a change in temperature. The rate of change of resistance is monitored by associated control equipment, and an alarm is initiated when the rate of temperature increase exceeds a preset value.

A.3.3.52 Double Doorway. Refer to Figure 5.16.6.5.3.1 for an illustration of detector location requirements for double doors.

A.3.3.56 Ember. Class A and Class D combustibles burn as embers under conditions where the flame typically associated with fire does not necessarily exist. This glowing combustion yields radiant emissions in parts of the radiant energy spectrum that are radically different from those parts affected by flaming combustion. Specialized detectors that are specifically designed to detect those emissions should be used in applications where this type of combustion is expected. In general, flame detectors are not intended for the detection of embers.

A.3.3.58 Evacuation. Evacuation does not include the relocation of occupants within a building.

A.3.3.64 Fire Alarm Control Unit. In addition to the functions identified in the definition, a fire alarm control unit might have an integral operator interface, supply power to detection devices, notification appliances, transponder(s), or off-premises transmitter(s) or any combination of these. The control unit might also provide transfer of condition to relay or devices connected to the control unit. There can be multiple fire alarm control units in a fire alarm system.

A.3.3.67.1 Auxiliary Fire Alarm System. Fire alarms from an auxiliary fire alarm system are received at the public fire service communications center on the same equipment and by the same methods as alarms transmitted from public fire alarm boxes. (SIG-PRS)

A.3.3.67.2 Combination System. Examples of non-fire systems are security, card access control, closed circuit television, sound reinforcement, background music, paging, sound masking, building automation, time, and attendance.

A.3.3.67.5 Protected Premises (Local) Fire Alarm System. A protected premises fire alarm system is any fire alarm system located at the protected premises. It can include any of the functions identified in Section 6.3. Where signals are transmitted to a public fire communication center or supervising station, the protected premises fire alarm system also falls under the definition of one of the following systems: central station service fire alarm system, remote supervising station fire alarm system, proprietary supervising station fire alarm system, or auxiliary fire alarm system. The requirements that pertain to these systems apply in addition to the requirements for the protected premises fire alarm systems.

A.3.3.102 Mass Notification System. A mass notification system may use intelligible voice communications, visible signals, text, graphics, tactile, or other communications methods. The system may be used to initiate evacuation or relocation or to provide information to occupants. The system may be intended for fire emergencies, weather emergencies, terrorist events, biological, chemical or nuclear emergencies, or any combination of these. The system may be automatic, manual, or both. Access to and control of the system may be from a single, on-site location or may include multiple command locations, including some remote from the area served. Systems may be wired, wireless, or some combination of the two.

A.3.3.111 Nonrequired. There are situations where the applicable building or fire code does not require the installation of a fire alarm system or specific fire alarm system components, but the building owner wants to install a fire alarm system or component to meet site-specific needs or objectives. A building owner always has the option of installing protection that is above the minimum requirements of the Code. It is the intent of the Code that any fire alarm system, or fire alarm system components installed voluntarily by a building owner, meet the requirements of the applicable portions of the Code. However, it is not the intent of the Code that the installation of a nonrequired fire alarm system, or fire alarm system components, trigger requirements for the installation of additional fire alarm system components or features. For example, the installation of a fire alarm control unit and fire detectors to

Copyright National Fire Protection Association
Provided by IHS under license with NFPA
No reproduction or networking permitted without license from IHS
Not for Resale

service a specific area, such as a computer room or flammable liquid storage room, does not trigger a requirement for audible or visible notification appliances, manual fire alarm boxes, or other fire alarm system features in other parts of the building.

A.3.3.123 Ownership. Inspection, testing and maintenance is the responsibility of the property or building owner, or it can be transferred by contract. Systems installed, owned, or leased by a tenant are the responsibility of the tenant. The installing company should provide written notice of these responsibilities to the system user.

A.3.3.181.2 Ionization Smoke Detection. Ionization smoke detection is more responsive to invisible particles (smaller than 1 micron in size) produced by most flaming fires. It is somewhat less responsive to the larger particles typical of most smoldering fires. Smoke detectors that use the ionization principle are usually of the spot type.

A.3.3.181.3 Photoelectric Light Obscuration Smoke Detection. The response of photoelectric light obscuration smoke detectors is usually not affected by the color of smoke.

Smoke detectors that use the light obscuration principle are usually of the line type. These detectors are commonly referred to as "projected beam smoke detectors."

A.3.3.181.4 Photoelectric Light-Scattering Smoke Detection. Photoelectric light-scattering smoke detection is more responsive to the visible particles (larger than 1 micron in size) produced by most smoldering fires. It is somewhat less responsive to the smaller particles typical of most flaming fires. It is also less responsive to black smoke than to lighter colored smoke. Smoke detectors that use the light-scattering principle are usually of the spot type.

A.3.3.181.5 Video Image Smoke Detection (VISD). Video image smoke detection (VISD) is a software-based method of smoke detection that has become practical with the advent of digital video systems. Listing agencies have begun testing VISD components for several manufacturers. VISD systems can analyze images for changes in features such as brightness, contrast, edge content, loss of detail, and motion. The detection equipment can consist of cameras producing digital or analog (converted to digital) video signals and processing unit(s) that maintain the software and interfaces to the fire alarm control unit.

A.3.3.186 Spark. The overwhelming majority of applications involving the detection of Class A and Class D combustibles with radiant energy–sensing detectors involve the transport of particulate solid materials through pneumatic conveyor ducts or mechanical conveyors. It is common in the industries that include such hazards to refer to a moving piece of burning material as a *spark* and to systems for the detection of such fires as *spark detection systems*.

A.3.3.209 Video Image Flame Detection (VIFD). Video image flame detection (VIFD) is a software-based method of flame detection that can be implemented by a range of video image analysis techniques. VIFD systems can analyze images for changes in features such as brightness, contrast, edge content, loss of detail, and motion. The detection equipment can consist of cameras producing digital or analog (converted to digital) video signals and processing unit(s) that maintain the software and interfaces to the fire alarm control unit.

A.3.3.211 Voice Intelligibility. As used in this Code, *intelligibility* and *intelligible* are both applied to the description of voice communications systems intended to reproduce human speech. When a human being can clearly distinguish and understand human speech reproduced by such a system, the system is said to be intelligible. Satisfactory intelligibility requires adequate audibility and adequate clarity. Clarity is defined as freedom from distortion of all kinds (IEC 60849, *Sound systems for emergency purposes*, Section 3.6). The following are three kinds of distortion responsible for the reduction of speech clarity in an electroacoustic system:

(1) Amplitude distortion, due to nonlinearity in electronic equipment and transducers
(2) Frequency distortion, due to nonuniform frequency response of transducers and selective absorption of various frequencies in acoustic transmission
(3) Time domain distortion, due to reflections and reverberation in the acoustic domain

Of these three kinds of distortion, frequency distortion is partially, and time domain distortion is totally, a function of the environment in which the system is installed (size, shape, and surface characteristics of walls, floors, and ceilings) and the character and placement of the loudspeakers (transducers).

A.3.3.213 Wavelength. The concept of wavelength is extremely important in selecting the proper detector for a particular application. There is a precise interrelation between the wavelength of light being emitted from a flame and the combustion chemistry producing the flame. Specific subatomic, atomic, and molecular events yield radiant energy of specific wavelengths. For example, ultraviolet photons are emitted as the result of the complete loss of electrons or very large changes in electron energy levels. During combustion, molecules are violently torn apart by the chemical reactivity of oxygen, and electrons are released in the process, recombining at drastically lower energy levels, thus giving rise to ultraviolet radiation. Visible radiation is generally the result of smaller changes in electron energy levels within the molecules of fuel, flame intermediates, and products of combustion. Infrared radiation comes from the vibration of molecules or parts of molecules when they are in the superheated state associated with combustion. Each chemical compound exhibits a group of wavelengths at which it is resonant. These wavelengths constitute the chemical's infrared spectrum, which is usually unique to that chemical.

This interrelationship between wavelength and combustion chemistry affects the relative performance of various types of detectors with respect to various fires.

A.3.3.218.1 Evacuation Signaling Zone. Evacuation signaling zones can be as small as a single room, or as large as an entire building, but more commonly are an entire floor or portions of floors divided by smoke or fire barriers.

A.4.3.2.2(2) Nationally recognized fire alarm certification programs might include those programs offered by the International Municipal Signal Association (IMSA) and National Institute for Certification in Engineering Technologies (NICET). Note: These organizations and the products or services offered by them have not been independently verified by the NFPA, nor have the products or services been endorsed or certified by the NFPA or any of its technical committees

A.4.3.3(2) Nationally recognized fire alarm certification programs might include those programs offered by the International Municipal Signal Association (IMSA) and National Institute for Certification in Engineering Technologies (NICET).

Copyright National Fire Protection Association
Provided by IHS under license with NFPA
No reproduction or networking permitted without license from IHS
Not for Resale

Note: These organizations and the products or services offered by them have not been independently verified by the NFPA, nor have the products or services been endorsed or certified by the NFPA or any of its Technical Committees.

A.4.4.1.5.1 The secondary power supply is not required to supply power to the fire alarm system through parallel distribution paths. Automatic transfer switches are commonly used to allow secondary power to be supplied over the same distribution system as the primary power.

The generator does not need to be dedicated to the fire alarm system.

A.4.4.1.5.3 When a fire alarm system is used to alert occupants, the associated premises are generally evacuated during prolonged power outages. When this is not the case, as in emergency shelters or certain government facilities, additional secondary power should be required to address a more prolonged outage. These outages might be expected to result from weather or earthquake in locations subject to these events. Reasonable judgment should be employed when requiring additional secondary capacity.

When a fire alarm system is used to protect property, the associated premises might be vacant for prolonged periods (weekend, long holiday) or in very remote locations. When this is the case, and when the risk of loss is significant, additional secondary power should be required to address a more prolonged outage. These outages might be expected to result from weather or earthquake in locations subject to these events. Reasonable judgment should be employed when requiring additional secondary capacity.

A.4.4.1.6 Where a computer system of any kind is used to receive and process alarm or supervisory signals, an uninterruptible power supply (UPS) with sufficient capacity to operate the system until the secondary supply is capable of operating the fire alarm system might be required in order to prevent signal loss or a greater than 10-second signal delay.

UPS equipment often contains an internal bypass arrangement to supply the load directly from the line. These internal bypass arrangements are a potential source of failure. UPS equipment also requires periodic maintenance. It is, therefore, necessary to provide a means of promptly and safely bypassing and isolating the UPS equipment from all power sources while maintaining continuity of power supply to the equipment normally supplied by the UPS.

A.4.4.1.8 The following newer types of rechargeable batteries are normally used in protected premises applications:

(1) *Vented Lead-Acid, Gelled, or Starved Electrolyte Battery.* This rechargeable-type battery is generally used in place of primary batteries in applications that have a relatively high current drain or that require the extended standby capability of much lower currents. The nominal voltage of a single cell is 2 volts, and the battery is available in multiples of 2 volts (e.g., 2, 4, 6, 12). Batteries should be stored according to the manufacturer's published instructions.

(2) *Nickel-Cadmium Battery.* The sealed-type nickel-cadmium battery generally used in applications where the battery current drain during a power outage is low to moderate (typically up to a few hundred milliamperes) and is fairly constant. Nickel-cadmium batteries are also available in much larger capacities for other applications. The nominal voltage per cell is 1.42 volts, with batteries available in multiples of 1.42 (e.g., 12.78, 25.56). Batteries in storage can be stored in any state of charge for indefinite periods. However, a battery in storage will lose capacity (will self-discharge), depending on storage time and temperature. Typically, batteries stored for more than 1 month require an 8-hour to 14-hour charge period to restore capacity. In service, the battery should receive a continuous, constant-charging current that is sufficient to keep it fully charged. (Typically, the charge rate equals 1/10 to 1/20 of the ampere-hour rating of the battery.) Because batteries are made up of individual cells connected in series, the possibility exists that, during deep discharge, one or more cells that are low in capacity will reach complete discharge prior to other cells. The cells with remaining life tend to charge the depleted cells, causing a polarity reversal resulting in permanent battery damage. This condition can be determined by measuring the open cell voltage of a fully charged battery (voltage should be a minimum of 1.28 volts per cell multiplied by the number of cells). Voltage depression effect is a minor change in discharge voltage level caused by constant current charging below the system discharge rate. In some applications of nickel-cadmium batteries (e.g., battery-powered shavers), a memory characteristic also exists. Specifically, if the battery is discharged daily for 1 minute, followed by a recharge, operation for 5 minutes will not result in the rated ampere-hour output because the battery has developed a 1-minute discharge memory.

(3) *Sealed Lead-Acid Battery.* In a sealed lead-acid battery, the electrolyte is totally absorbed by the separators, and no venting normally occurs. Gas evolved during recharge is internally recombined, resulting in minimal loss of capacity life. A high-pressure vent, however, is provided to avoid damage under abnormal conditions.

A.4.4.1.8.1 Markings for month and year can be applied by the manufacturer or in the field on the basis of the manufacturer's date code.

A.4.4.1.8.3.4 Batteries are trickle-charged if they are off-line and waiting to be put under load in the event of a loss of power.

Float-charged batteries are fully charged and connected across the output of the rectifiers to smooth the output and to serve as a standby source of power in the event of a loss of line power.

A.4.4.3.1 The recommended coded signal designations for buildings that have four floors and multiple basements are provided in Table A.4.4.3.1.

Table A.4.4.3.1 Recommended Coded Signal Designations

Location	Coded Signal
Fourth floor	2–4
Third floor	2–3
Second floor	2–2
First floor	2–1
Basement	3–1
Sub-basement	3–2

Copyright National Fire Protection Association
Provided by IHS under license with NFPA
No reproduction or networking permitted without license from IHS
Not for Resale

A.4.4.3.4.2 The operability of controlled mechanical equipment (e.g., smoke and fire dampers, elevator recall arrangements, and door holders) should be verified by periodic testing. Failure to test and properly maintain controlled mechanical equipment can result in operational failure during an emergency, with potential consequences up to and including loss of life.

A.4.4.3.5.8.3 The purpose of automatic trouble re-sound is to remind owners, or those responsible for the system, that the system remains in a fault condition. A secondary benefit is to possibly alert occupants of the building that the fire alarm system is in a fault condition.

A.4.4.3.5.8.4 In large, campus-style arrangements with proprietary supervising stations monitoring protected premises systems, and in other situations where off-premises monitoring achieves the desired result, the authority having jurisdiction is permitted to allow the re-sound to occur only at the supervising station. Approval by the authority having jurisdiction is required so it can consider all fire safety issues and make a determination that there are procedures in place to ensure that the intent is met; in other words, someone is available to take action to correct the problem.

A.4.4.3.6.2(2) A valve supervisory, low-pressure switch or other device intended to cause a supervisory signal when actuated should not be connected in series with the end-of-line supervisory device of initiating device circuits, unless a distinctive signal, different from a trouble signal, is indicated.

A.4.4.3.7 It is the intent that both visual and audible appliances are shut off when the signal silence feature is activated on the fire alarm control unit.

Per the ADA, it is important not to provide conflicting signals for the hearing impaired.

A.4.4.4.1(1) The requirement of 4.4.4.1(1) does not preclude transfer to secondary supply at less than 85 percent of nominal primary voltage, provided the requirements of 4.4.1.5 are met.

A.4.4.4.2.1 Fire alarm specifications can include some or all of the following:

(1) Address of the protected premises
(2) Owner of the protected premises
(3) Authority having jurisdiction
(4) Applicable codes, standards, and other design criteria to which the system is required to comply
(5) Type of building construction and occupancy
(6) Fire department response point(s) and annunciator location(s)
(7) Type of fire alarm system to be provided
(8) Calculations (e.g., secondary supply and voltage drop calculations)
(9) Type(s) of fire alarm–initiating devices, supervisory alarm–initiating devices, and evacuation notification appliances to be provided
(10) Intended area(s) of coverage
(11) Complete list of detection, evacuation signaling, and annunciator zones
(12) Complete list of fire safety control functions
(13) Complete sequence of operations detailing all inputs and outputs

A.4.4.4.4 The installation of all fire alarm system wiring should take into account the fire alarm system manufacturer's published installation instructions and the limitations of the applicable product listings or approvals.

A.4.4.5 The fire alarm control unit(s) that are to be protected are those that provide notification of a fire to the occupants and responders. The term *fire alarm control unit* does not include equipment such as annunciators and addressable devices. Requiring smoke detection at the transmitting equipment is intended to increase the probability that an alarm signal will be transmitted to a supervising station prior to that transmitting equipment being disabled due to the fire condition.

CAUTION: Exception No. 1 to 4.4.5 permits the use of a heat detector if ambient conditions are not suitable for smoke detection. It is important to also evaluate whether the area is suitable for the control unit.

Where the area or room containing the control unit is provided with total smoke-detection coverage, additional smoke detection is not required to protect the control unit. Where total smoke-detection coverage is not provided, the Code intends that only one smoke detector is required at the control unit even when the area of the room would require more than one detector if installed according to the spacing rules in Chapter 5. The intent of selective coverage is to address the specific location of the equipment.

Location of the required detection should be in accordance with one of the following:

(1) Where the ceiling is 4.6 m (15 ft) in height or less, the smoke detector should be located on the ceiling or the wall within 6.4 m (21 ft) of the centerline of the fire alarm control unit being protected by the detector in accordance with 5.7.3.2.1.
(2) Where the ceiling exceeds 4.6 m (15 ft) in height, the automatic smoke detector should be installed on the wall above and within 1.8 m (6 ft) from the top of the control unit.

A.4.4.6.3 The primary purpose of fire alarm system annunciation is to enable responding personnel to identify the location of a fire quickly and accurately and to indicate the status of emergency equipment or fire safety functions that might affect the safety of occupants in a fire situation.

A.4.4.6.6 Fire alarm system annunciation should, as a minimum, be sufficiently specific to identify a fire alarm signal in accordance with the following:

(1) If a floor exceeds 2093 m^2 (22,500 ft^2) in area, the floor should be subdivided into detection zones of 2093 m^2 (22,500 ft^2) or less, consistent with the existing smoke and fire barriers on the floor.
(2) If a floor exceeds 2093 m^2 (22,500 ft^2) in area and is undivided by smoke or fire barriers, detection zoning should be determined on a case-by-case basis in consultation with the authority having jurisdiction.
(3) Waterflow switches on sprinkler systems that serve multiple floors, areas exceeding 2093 m^2 (22,500 ft^2), or areas inconsistent with the established detection system zoning should be annunciated individually.
(4) In-duct smoke detectors on air-handling systems that serve multiple floors, areas exceeding 2093 m^2 (22,500 ft^2), or areas inconsistent with the established detection system zoning should be annunciated individually.
(5) If a floor area exceeds 2093 m^2 (22,500 ft^2), additional zoning should be provided. The length of any zone should not exceed 91 m (300 ft) in any direction. If the building is provided with automatic sprinklers throughout, the area of the alarm zone should be permitted to coincide with the allowable area of the sprinkler zone.

--`,,```,,,,````-`-`,,`,,`,`,,`---

Copyright National Fire Protection Association
Provided by IHS under license with NFPA
No reproduction or networking permitted without license from IHS

Not for Resale

A.4.4.7.1 The provision of a double loop or other multiple path conductor or circuit to avoid electrical monitoring is not acceptable.

A.4.4.7.1.7 This Code does not have jurisdiction over the monitoring integrity of conductors within equipment, devices, or appliances.

A.4.4.7.2.1 Amplifiers generally require significant power regardless of load. To reduce the secondary power demand, there is no requirement to monitor the integrity of amplifiers during non-alarm operation on secondary power. This allows the amplifiers to be shut down while the system is operating on secondary power until an alarm occurs. When an alarm occurs, monitoring of integrity must resume so that an operator is aware of current conditions and so that any backup amplifiers can be engaged.

Backup amplifying and evacuation signal–generating equipment is recommended with automatic transfer upon primary equipment failure to ensure prompt restoration of service in the event of equipment failure.

A.4.4.7.3.2 Because digital alarm communicator systems establish communications channels between the protected premises and the central station via the public switched telephone network, the requirement to supervise circuits between the protected premises and the central station *(see 4.4.7.1)* is considered to be met if the communications channel is periodically tested in accordance with 8.6.3.2.1.5.

A.4.4.7.3.3 This requirement is intended to prevent all of the supervising station fire alarm systems in a given geographic area from transmitting simultaneous trouble signals (and overwhelming the associated supervising stations) in the event of a widespread power failure. A trouble signal is not intended to be transmitted if primary power is restored within the time delay.

A.4.5.1.1 Shop drawings for fire alarm systems are intended to provide basic information consistent with the objective of installing a fully operational, code-compliant fire alarm system and to provide the basis for the record drawings required elsewhere in this Code.

Approval of shop drawings is not intended to imply waiver or modification of any requirements of this Code or any other applicable criteria.

Shop drawings should include, to an extent commensurate with the extent of the work being performed, floor plan drawings, riser diagrams (except for systems in single-story buildings), control unit wiring diagrams, point-to-point wiring diagrams, and typical wiring diagrams as described herein.

All shop drawings should be drawn on sheets of uniform size and should include the following information:

(1) Name of owner and occupant
(2) Location, including street address
(3) Device legend
(4) Date
(5) Input/output programming matrix

Floor plan drawings should be drawn to an indicated scale and should include the following information:

(1) Floor identification
(2) Point of compass
(3) Graphic scale
(4) All walls and doors
(5) All partitions extending to within 15 percent of the ceiling height
(6) Room descriptions
(7) Fire alarm device/component locations
(8) Locations of fire alarm primary power connection(s)
(9) Locations of monitor/control interfaces to other systems
(10) Riser locations
(11) Routing for Class A compliance, where applicable
(12) Methods for compliance with 6.9.10.4 for survivability (emergency voice systems) as shown in Section 6.9, where applicable
(13) Ceiling height and ceiling construction details

Fire alarm system riser diagrams should include the following information:

(1) General arrangement of the system, in building cross-section
(2) Number of risers
(3) Type and number of circuits in each riser
(4) Type and number of fire alarm system components/devices on each circuit, on each floor or level

Control unit wiring diagrams should be provided for all control equipment (i.e., equipment listed as either a control unit or control unit accessory), power supplies, battery chargers, and annunciators and should include the following information:

(1) Identification of the control equipment depicted
(2) Location(s)
(3) All field wiring terminals and terminal identifications
(4) All circuits connected to field wiring terminals, and circuit identifications
(5) All indicators and manual controls, including the full text of all labels
(6) All field connections to supervising station signaling equipment, releasing equipment, and fire safety control interfaces

Typical wiring diagrams should be provided for all initiating devices, notification appliances, remote alarm light emitting diodes (LEDs), remote test stations, and end-of-line and power supervisory devices.

A.4.5.1.3 Protected premises fire alarm systems are often installed under construction or remodeling contracts and subsequently connected to a supervising station fire alarm system under a separate contract. All contractors should complete the portions of the record of completion form for the portions of the connected systems for which they are responsible. Several partially completed forms might be accepted by the authority having jurisdiction provided that all portions of the connected systems are covered in the set of forms.

A.4.5.2.1 The requirements of Chapter 10 should be used to perform the installation wiring and operational acceptance tests required when completing the record of completion.

The record of completion form shall be permitted to be used to record decisions reached prior to installation regarding intended system type(s), circuit designations, device types, notification appliance type, power sources, and the means of transmission to the supervising station.

An example of a completed record of completion form is shown in Figure A.4.5.2.1.

--`,,```,,,,````-`-`,,`,,`,`,,`---
Copyright National Fire Protection Association
Provided by IHS under license with NFPA
No reproduction or networking permitted without license from IHS
Not for Resale

FIRE ALARM SYSTEM RECORD OF COMPLETION

To be completed by the system installation contractor at the time of system acceptance and approval.

1. PROTECTED PROPERTY INFORMATION

Name of property: Buy American, Inc.

Address: 1776 Freedom Lane, Anytown, FL

Description of property: World Headquarters

Occupancy type: B1 Business Occupancy

Name of property representative: George Washington

Address: 1776 Freedom Lane, Anytown, FL 00000-0000

Phone: 666/666-6666 Fax: 777/777-7777 E-mail: georgew@usa.com

Authority having jurisdiction over this property: Fred Firestop, Fire Chief, Anytown FD

Phone: 888/888-8888 Fax: 999/999-9999 E-mail: fred@anytown.com

2. FIRE ALARM SYSTEM INSTALLATION, SERVICE, AND TESTING INFORMATION

Installation contractor for this equipment: Alarm System Installations, Inc.

Address: 1234 Alarm Lane, Anytown, FL 00000-0000

Phone: 222/222-2222 Fax: 333/333-3333 E-mail: johnqsmith@anytown.com

Service organization for this equipment: Alarm System Installations, Inc.

Address: 1234 Alarm Lane, Anytown, FL 00000-0000

Phone: 222/222-2222 Fax: 333/333-3333 E-mail: johnqsmith@anytown.com

Location of as-built drawings: Buy American Maintenance Shop Location of historical test reports: Same

Location of system operation and maintenance manuals: Same

A contract for test and inspection in accordance with NFPA standards is in effect as of July 4, 2006

Contracted testing company: ABC Fire Service Company

Address: 5678 Testing Avenue, Anytown, FL 00000-0000

Phone: 444/444-4444 Fax: 555/555-5555 E-mail: abctesters@anytown.com

Contract expires: July 4, 2007 Contract number: 9876 Frequency of routine inspections: Quarterly

3. TYPE OF FIRE ALARM SYSTEM OR SERVICE

NFPA 72 Chapter Reference of System Type: Chapters 6 and 8

Name of organization receiving alarm signals with phone numbers *(if applicable)*:

Alarm: Monitoring Company, Inc. Phone: 987/654-3210

Supervisory: Monitoring Company, Inc. Phone: 987/654-3210

Trouble: Monitoring Company, Inc. Phone: 987/654-3210

Entity to which alarms are retransmitted: Anytown Fire Department Phone: 888/888-8888

Method of retransmission of alarms to that organization or location: Telephone

SAMPLE

© 2007 National Fire Protection Association

FIGURE A.4.5.2.1 Example of a Filled Out Record of Completion for a Fire Alarm System.

Copyright National Fire Protection Association
Provided by IHS under license with NFPA
No reproduction or networking permitted without license from IHS
Not for Resale

3. TYPE OF FIRE ALARM SYSTEM OR SERVICE *(continued)*

If Chapter 8, note the means of transmission from the protected premises to the central station:

☒ Digital alarm communicator ❑ McCulloh ❑ Multiplex ❑ 2-way radio ❑ 1-way radio ❑ N/A

If Chapter 9, note the type of connection: ❑ Local energy ❑ Shunt ❑ N/A

3.1 System Software

Operating system (executive) software revision level: X 2.3.4.5.6.7.8

Site-specific software revision date: January 1, 2006 Revision completed by: Abel Programmer

4. SIGNALING LINE CIRCUITS

Characteristics of signaling line circuits connected to this system (see NFPA 72, Table 6.6.1):

Quantity: 3 Style: 4 Class: B

5. ALARM-INITIATING DEVICES AND CIRCUITS

Characteristics of initiating device circuits connected to this system (see NFPA 72, Table 6.5):

Quantity: _____ Style: _____ Class: _____

5.1 Manual Initiating Devices

5.1.1 Manual Pull Stations Number of manual pull stations: 22

Type of devices: ☒ Addressable ❑ Conventional ❑ Coded ❑ Transmitter ❑ N/A

5.2 Automatic Initiating Devices

5.2.1 Area Smoke Detectors Number of smoke detectors: 42

Type of coverage: ❑ Complete area ☒ Partial area ❑ Nonrequired partial area ❑ N/A

Type of devices: ☒ Addressable ❑ Conventional ❑ Coded ❑ Transmitter ❑ N/A

Type of smoke detector sensing technology: ❑ Ionization ☒ Photoelectric

5.2.2 Duct Smoke Detectors Number of duct smoke detectors: 16

Type of coverage: All HVAC Units over 2000 CFM

Type of devices: ☒ Addressable ❑ Conventional ❑ Coded ❑ Transmitter ❑ N/A

Type of smoke detector sensing technology: ❑ Ionization ☒ Photoelectric

5.2.3 Heat Detectors Number of heat detectors: 8

Type of coverage: ❑ Complete area ☒ Partial area ❑ Nonrequired partial area ❑ N/A

Type of devices: ☒ Addressable ❑ Conventional ❑ Coded ❑ Transmitter ❑ N/A

5.2.4 Sprinkler Waterflow Detectors Number of waterflow detectors: 2

Type of devices ☒ Addressable ❑ Conventional ❑ Coded ❑ Transmitter ❑ N/A

5.2.5 Alarm Verification Number of devices subject to alarm verification: 0

Alarm verification on this system is: ❑ Enabled ☒ Disabled ❑ Set for _____ seconds

SAMPLE

© 2007 National Fire Protection Association

FIGURE A.4.5.2.1 ***Continued***

Copyright National Fire Protection Association
Provided by IHS under license with NFPA
No reproduction or networking permitted without license from IHS
Not for Resale

6. SUPERVISORY SIGNAL-INITIATING DEVICES AND CIRCUITS

6.1 Sprinkler System

Number of valve supervisory switches: 4

Type of devices: ☒ Addressable ❑ Conventional ❑ Coded ❑ Transmitter ❑ N/A

6.2 Fire Pump

Type of fire pump: ❑ Electric ☒ Diesel

Type of fire pump supervisory devices: ☒ Addressable ❑ Conventional ❑ Coded ❑ Transmitter ❑ N/A

Fire Pump Functions Supervised

❑ Fire pump power ☒ Fire pump running ❑ Fire pump phase reversal ☒ Selector switch not in auto

☒ Engine or control panel trouble ☒ Low fuel

Other: _____

6.3 Engine-Driven Generator

Type of generator supervisory devices: ☒ Addressable ❑ Conventional ❑ Coded ❑ Transmitter ❑ N/A

☒ Engine or control panel trouble ☒ Generator running ☒ Selector switch not in auto ☒ Low fuel

Other: _____

7. ANNUNCIATORS

7.1 Annunciator 1 ❑ Local ☒ Remote

Type: ❑ Addressable ❑ Directory ☒ Graphic ❑ N/A Location: Building Main Entrance

7.2 Annunciator 2 ❑ Local ❑ Remote

Type: ❑ Addressable ❑ Directory ❑ Graphic ❑ N/A Location: _____

7.3 Annunciator 3 ❑ Local ❑ Remote

Type: ❑ Addressable ❑ Directory ❑ Graphic ❑ N/A Location: _____

8. ALARM NOTIFICATION DEVICES AND CIRCUITS

8.1 Emergency Voice Alarm Service

Number of single voice alarm channels: 0 Number of multiple voice alarm channels: 0

Number of speakers: 0 Number of speaker zones: 0

8.2 Telephone Jacks

Number of telephone jacks installed: 16 Number of telephone handsets stored on site: 6

Type of telephone system installed: ❑ Electrically powered ☒ Sound powered ❑ N/A

8.3 Nonvoice Audible System

Characteristics of notification device circuits connected to this system (see NFPA 72, Table 6.5):

Quantity: 4 Style: Y Class: B

SAMPLE

© 2007 National Fire Protection Association

FIGURE A.4.5.2.1 ***Continued***

Copyright National Fire Protection Association
Provided by IHS under license with NFPA
No reproduction or networking permitted without license from IHS
Not for Resale

8. ALARM NOTIFICATION DEVICES AND CIRCUITS *(continued)*

8.4 Types and Quantities of Nonvoice Notification Appliances Installed

Bells: _____ With visual device: _____ Horns: 14 With visual device: 14

Chimes: _____ With visual device: _____ Bells: _____ With visual device: _____

Visual devices without audible devices: 6 Other (describe): _____

9. EMERGENCY CONTROL FUNCTIONS ACTIVATED

☒ Hold-Open Door Releasing Devices ❑ Smoke Management or Smoke Control

❑ Door Unlocking ☒ Elevator Recall ❑ Other

10. SYSTEM POWER SUPPLY

10.1 Primary Power

Nominal voltage 120 VAC Amps 8.5

Overcurrent protection: Type Circuit Breaker Amps 20

Location (of primary supply panelboard): Electrical Room 103, Panel EP-2

Disconnecting means location: Electrical Room 103, Panel EP-2

10.2 Secondary Power

Location: Basement Generator Room Type: Generator Nominal voltage: 120 VAC Current rating: 20

Number of standby batteries: 2 Amp hour rating: 12

Location of emergency generator: Basement Generator Room

Location of fuel storage: Adjacent to Generator Room

Calculated capacity of secondary power to drive the system

In standby mode: 24 hours In alarm mode: 5 minutes

11. RECORD OF SYSTEM INSTALLATION

Fill out after all installation is complete and wiring has been checked for opens, shorts, ground faults, and improper branching, but before conducting operational acceptance tests.

The system has been installed in accordance with the following NFPA standards: (Note any or all that apply.)

☒ *NFPA 72* ☒ NFPA 70, *National Electrical Code*, Article 760

☒ Manufacturer's published instructions ❑ Other (please specify): _____

System deviations from referenced NFPA standards: None

Signed: _____ Printed name: John Q. Smith Date: July 4, 2006

Organization: Alarm System Installations Title: Manager Phone: 222/222-2222

12. RECORD OF SYSTEM OPERATION

All operational features and functions of this system were tested by or in the presence of the signer shown below, on the date shown below, and were found to be operating properly in accordance with the requirements of:

☒ *NFPA 72* ☒ NFPA 70, *National Electrical Code*, Article 760

☒ Manufacturer's published instructions ❑ Other (please specify):

❑ Documentation in accordance with Inspection and Testing Form (Figure 10.6.2.3) is attached

Signed: _____ Printed name: Benjamin Franklin Date: July 4, 2006

Organization: ABC Fire Service Company Title: President Phone: 444/444-4444

SAMPLE

© 2007 National Fire Protection Association

FIGURE A.4.5.2.1 ***Continued***

Copyright National Fire Protection Association
Provided by IHS under license with NFPA
No reproduction or networking permitted without license from IHS
Not for Resale

13. CERTIFICATIONS AND APPROVALS

13.1 System Installation Contractor

This system as specified herein has been installed and tested according to all NFPA standards cited herein.

Signed: _____ Printed name: John Q. Smith Date: July 4, 2006

Organization: Alarm System Installations Title: Manager Phone: 222/222-2222

13.2 System Service Contractor

This system as specified herein has been installed and tested according to all NFPA standards cited herein.

Signed: _____ Printed name: John Q. Smith Date: July 4, 2006

Organization: Alarm System Installations Title: Manager Phone: 222/222-2222

13.3 Central Station

This system as specified herein will be monitored according to all NFPA standards cited herein.

Signed: _____ Printed name: Abraham Lincoln Date: July 4, 2006

Organization: Monitoring Company, Inc. Title: President Phone: 987/654-3210

13.4 Property Representative

I accept this system as having been installed and tested to its specifications and all NFPA standards cited herein.

Signed: _____ Printed name: George Washington Date: July 4, 2006

Organization: Buy American, Inc. Title: President Phone: 666/666-6666

13.5 Authority Having Jurisdiction

I have witnessed a satisfactory acceptance test of this system and find it to be installed and operating properly in accordance with its approved plans and specifications, its approved sequence of operations, and with all NFPA standards cited herein.

Signed: _____ Printed name: Fred Firestop Date: July 4, 2006

Organization: Anytown Fire Dept. Title: Fire Chief Phone: 888/888-8888

SAMPLE

© 2007 National Fire Protection Association

FIGURE A.4.5.2.1 ***Continued***

--`,,```,,,,````-`-`,,`,,`,`,,`---

Copyright National Fire Protection Association
Provided by IHS under license with NFPA
No reproduction or networking permitted without license from IHS
Not for Resale

A.4.5.2.3(1) The owner's manual should include the following:

(1) A detailed narrative description of the system inputs, evacuation signaling, ancillary functions, annunciation, intended sequence of operations, expansion capability, application considerations, and limitations
(2) Operator instructions for basic system operations, including alarm acknowledgment, system reset, interpretation of system output (LEDs, CRT display, and printout), operation of manual evacuation signaling and ancillary function controls, and change of printer paper
(3) A detailed description of routine maintenance and testing as required and recommended and as would be provided under a maintenance contract, including testing and maintenance instructions for each type of device installed. This information should include the following:
    (a) Listing of the individual system components that require periodic testing and maintenance
    (b) Step-by-step instructions detailing the requisite testing and maintenance procedures, and the intervals at which these procedures shall be performed, for each type of device installed
    (c) A schedule that correlates the testing and maintenance procedures that are recommended by A.4.5.2.3(1)(1)(3)(b) with the listing recommended by A.4.5.2.3(1)(1)(3)(a)
(4) Detailed troubleshooting instructions for each trouble condition generated from the monitored field wiring, including opens, grounds, and loop failures [These instructions should include a list of all trouble signals annunciated by the system, a description of the condition(s) that causes such trouble signals, and step-by-step instructions describing how to isolate such problems and correct them (or how to call for service, as appropriate).]
(5) A service directory, including a list of names and telephone numbers of those who provide service for the system

A.4.5.2.4 This section is intended to provide a basis for the authority having jurisdiction to require third-party verification and certification that the authority having jurisdiction and the system owner can rely on to reasonably assure that the fire alarm system installation complies with the applicable requirements.

A.4.6 The term *impairments* encompasses a broad range of circumstances wherein a fire alarm system or portion thereof is taken out of service for a variety of reasons. Fire alarm systems are routinely impaired in order to perform hot work (e.g., open flame operations) in areas with automatic detection, construction, painting, etc., as well as to conduct normal fire alarm system maintenance and testing. Impairments can be limited to specific initiating devices and/or functions (e.g., disconnecting the supervising station connection during system testing), or they can involve taking entire systems or portions of systems out of service. This section is intended to help building owners control impairments of the fire alarm system(s) in their building(s) and to ensure that systems are restored to full operation and/or returned to service afterward.

Additional requirements for impairments and out-of-service conditions exist in 10.2.1.2.

A.4.6.3 The need for mitigating measures is typically determined on a case-by-case basis. This considers the building, occupancy type, nature and duration of impairment, building occupancy level during impairment period, active work being conducted on the fire alarm system during the impairment, condition of other fire protection systems and features (i.e., sprinklers, structural compartmentation, etc.), and hazards and assets at risk.

Appropriate mitigating measures range from simple occupant notification to full-time fire watch. Determining factors vary from testing-related impairments and maintenance activities during normal business through extensive impairments to high-value, high-hazard situations.

A.5.3 Annex B, Engineering Guide for Automatic Fire Detector Spacing, provides a detailed design guide for the implementation of the performance-based design of fire alarm systems.

A.5.4.7 The monitoring of circuit integrity relies on the interruption of the wiring continuity when the connection to the initiating device is lost. Terminals and leads, as illustrated in Figure A.5.4.7(a) and Figure A.5.4.7(b), monitor the presence of the device on the initiating device circuit.

A.5.5.2 The requirement of 5.5.2 recognizes that there are several different types of detector coverage.

A.5.5.2.2 If there are no detectors in the room or area of fire origin, the fire could exceed the design objectives before being detected by remotely located detectors. When coverage other than total coverage is required, partial coverage can be provided in common areas and work spaces such as corridors, lobbies, storage rooms, equipment rooms, and other tenantless spaces. The intent of selective coverage is to address a specific hazard only.

Where a specific area is to be protected, all points within that area should be within 0.7 × the adjusted detector spacing for spot-type detectors as required by 5.6.5 and 5.7.3.2. Note that an area does not necessarily mean an entire room. It is possible to provide properly spaced detectors to provide detection for only part of a room. Similarly, the Code permits protection of a specific hazard. In that case, detectors within a radius of 0.7 × the adjusted detector spacing from the hazard provide the required detection. An example of protection of specific risk is the smoke detector required by 6.16.3 to be within 6.4 m (21 ft) of an elevator, where elevator recall is required.

It should also be noted that fire detection by itself is not fire protection. Also, protection goals could be such that detection being provided for a specific area or hazard might require a form of total coverage for that particular area or hazard. That is, it might be necessary to provide detectors above suspended ceilings or in small closets and other ancillary spaces that are a part of, or an exposure to, the area or hazard being protected.

A.5.5.2.3 The requirement of 5.5.2.3 recognizes there will be instances where, for example, a facility owner would want to apply detection to meet certain performance goals and to address a particular hazard or need, but that detection is not required. Once installed, of course, acceptance testing, annual testing, and ongoing maintenance in accordance with this Code is expected. The intent of this section is to allow the use of a single detector, or multiple detectors provided for specific protection, with spacing to meet specific fire safety objectives as determined in accordance with 5.6.1.1 and 5.7.1.1.

A.5.6.1.1 The performance objective statement should describe the purpose of the detector placement and the intended response of the fire alarm control unit to the detector activation. This statement can include a narrative description of the required response time of the detectors, a narrative of the sequence of operations, a tabular list of programming requirements or some other method.

Copyright National Fire Protection Association
Provided by IHS under license with NFPA
No reproduction or networking permitted without license from IHS
Not for Resale

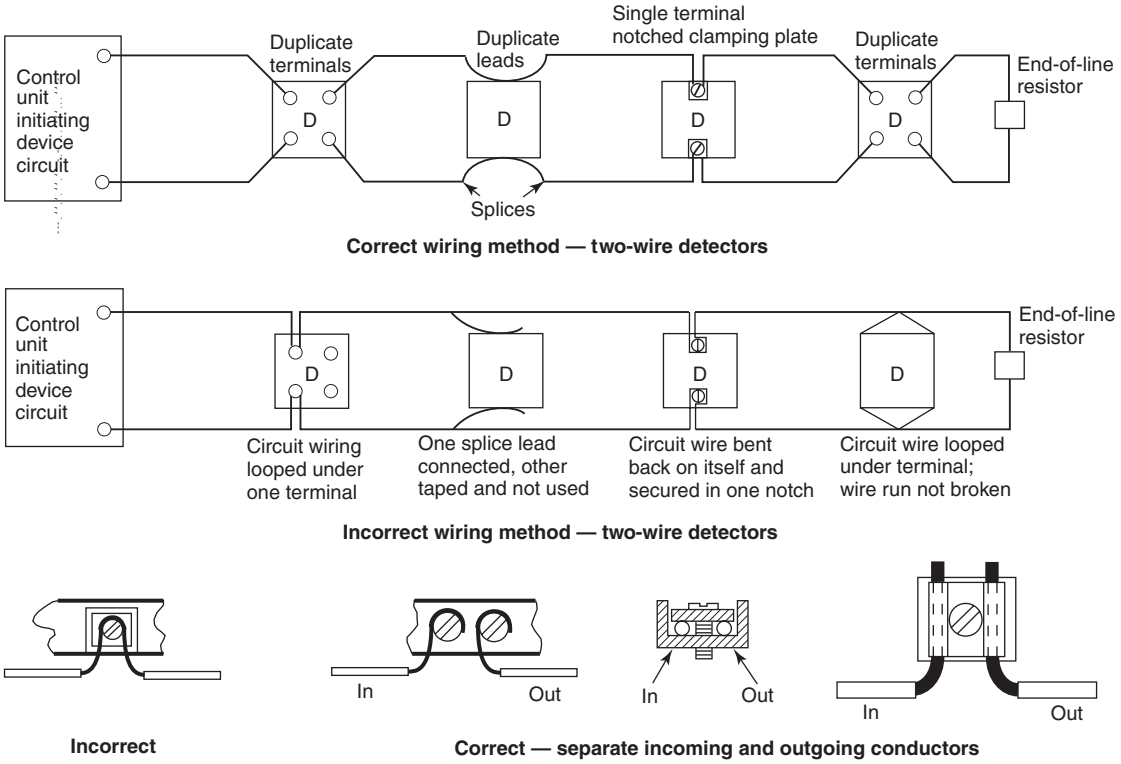

FIGURE A.5.4.7(a) Correct (and Incorrect) Wiring Methods.

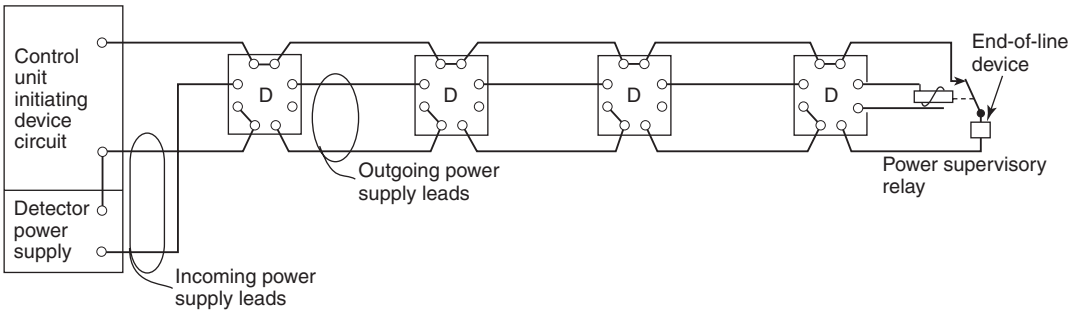

Illustrates four-wire smoke detector employing a three-wire connecting arrangement. One side of power supply is connected to one side of initiating device circuit. Wire run broken at each connection to smoke detector to provide supervision.

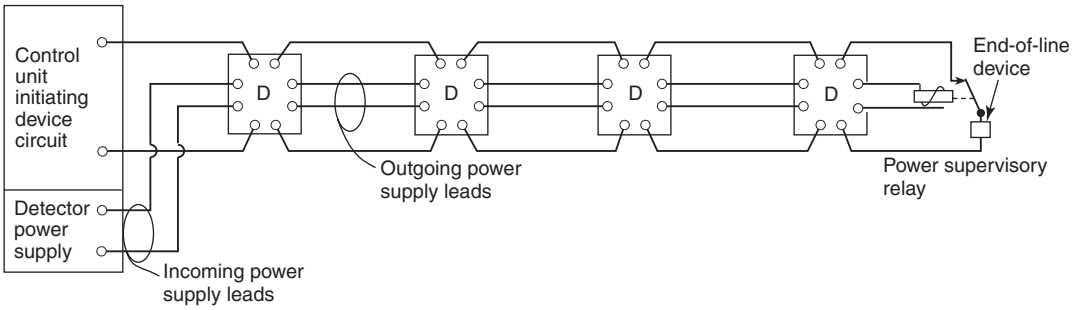

Illustrates four-wire smoke detector employing a four-wire connecting arrangement. Incoming and outgoing leads or terminals for both initiating device and power supply connections. Wire run broken at each connection to provide supervision.

D = Detector

FIGURE A.5.4.7(b) Wiring Arrangements for Four-Wire Detectors.

Copyright National Fire Protection Association
Provided by IHS under license with NFPA
No reproduction or networking permitted without license from IHS
Not for Resale

The performance objective of a fire detection system is usually expressed in terms of time and the size fire the system is intended to detect, measured in kilowatts (kW) or British thermal units per second (Btu/sec). Typically, the fire alarm system designer does not establish this criterion. It is usually obtained from the design documentation prepared by the designer responsible for the strategy of the structure as a whole. Where a prescriptive design is being provided, this requirement is fulfilled by stating in the design documentation that the design conforms to the prescriptive provisions of this Code.

A.5.6.1.3 In a performance-based design environment, the performance objectives for the fire alarm system are not established by the fire alarm system designer.

A fire protection strategy is developed to achieve those goals. General performance objectives are developed for the facility. These general objectives give rise to specific performance objectives for each fire protection system being employed in the facility. Consequently, the performance objectives and criteria for the fire alarm system are part of a much larger strategy that often relies on other fire protection features, working in concert with the fire alarm system to attain the overall fire protection goals for the facility.

In the performance-based design environment, the designer uses computational models to demonstrate that the spacing used for automatic fire detectors connected to the fire alarm system will achieve the objectives established by the system, by showing that the system meets the performance criteria established for the system in the design documentation. Consequently, it is imperative that the design objectives and performance criteria to which the system has been designed are clearly stated in the system documentation.

A.5.6.1.4 In order to predict the response of a heat detector using current fire modeling programs and currently published equations describing plume dynamics, two parameters must be known: operating temperature and response time index (RTI). The RTI is the quantification of the rate of heat transfer from the ceiling jet to the detector sensing element per unit of time, expressed as a function of ceiling jet temperature, ceiling jet velocity, and time.

A.5.6.2.2 The linear space rating is the maximum allowable distance between heat detectors. The linear space rating is also a measure of the heat detector response time to a standard test fire where tested at the same distance. The higher the rating, the faster the response time. This Code recognizes only those heat detectors with ratings of 15 m (50 ft) or more.

A.5.6.3.1 Figure A.5.6.3.1 illustrates the proper mounting placement for detectors.

A.5.6.4 Detectors should be selected to minimize this temperature difference in order to minimize response time. However, a heat detector with a temperature rating that is somewhat in excess of the highest normally expected ambient temperature is specified in order to avoid the possibility of premature operation of the heat detector to non-fire conditions.

A.5.6.5 In addition to the special requirements for heat detectors that are installed on ceilings with exposed joists, reduced spacing also could be required due to other structural characteristics of the protected area, such as possible drafts or other conditions that could affect detector operation.

A.5.6.5.1 Maximum linear spacings on smooth ceilings for spot-type heat detectors are determined by full-scale fire tests. *[See Figure A.5.6.5.1(c).]* These tests assume that the detectors are to be installed in a pattern of one or more squares, each side of which equals the maximum spacing as determined in the test, as illustrated in Figure A.5.6.5.1(a). The detector to be tested is placed at a corner of the square so that it is positioned at the farthest possible distance from the fire while remaining within the square. Thus, the distance from the detector to the fire is always the test spacing multiplied by 0.7 and can be calculated as shown in Table A.5.6.5.1. Figure A.5.6.5.1(b) illustrates the smooth ceiling spacing layout for line-type heat detectors.

Once the correct maximum test distance has been determined, it is valid to interchange the positions of the fire and the detector. The detector is now in the middle of the square, and the listing specifies that the detector is adequate to detect a fire that occurs anywhere within that square — even out to the farthest corner.

In laying out detector installations, designers work in terms of rectangles, as building areas are generally rectangular in shape. The pattern of heat spread from a fire source, however, is not rectangular in shape. On a smooth ceiling, heat spreads out in all directions in an ever-expanding circle. Thus, the coverage of a detector is not, in fact, a square, but rather a circle whose radius is the linear spacing multiplied by 0.7.

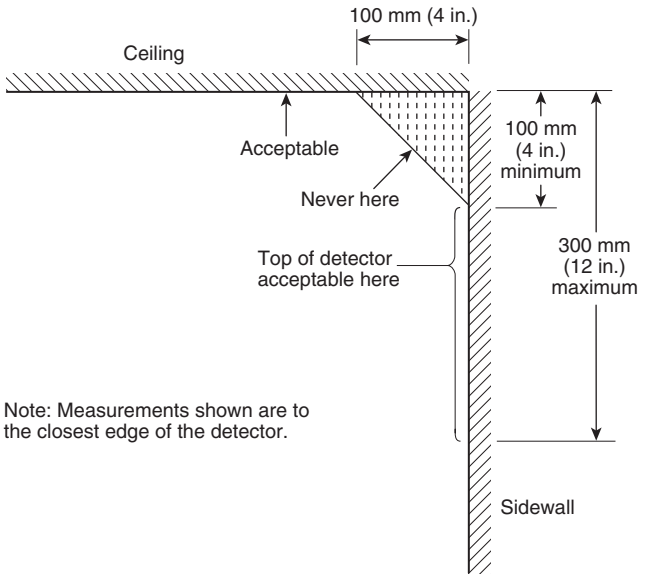

FIGURE A.5.6.3.1 Example of Proper Mounting for Detectors.

Table A.5.6.5.1 Test Spacing for Spot-Type Heat Detectors

Test Spacing		Maximum Test Distance from Fire to Detector (0.7*D*)	
m	**ft**	**m**	**ft**
15.24 × 15.24	50 × 50	10.67	35.0
12.19 × 12.19	40 × 40	8.53	28.0
9.10 × 9.10	30 × 30	6.40	21.0
7.62 × 7.62	25 × 25	5.33	17.5
6.10 × 6.10	20 × 20	4.27	14.0
4.57 × 4.57	15 × 15	3.20	10.5

Copyright National Fire Protection Association
Provided by IHS under license with NFPA
No reproduction or networking permitted without license from IHS
Not for Resale

This is graphically illustrated in Figure A.5.6.5.1(d). With the detector at the center, by rotating the square, an infinite number of squares can be laid out, the corners of which create the plot of a circle whose radius is 0.7 times the listed spacing. The detector will cover any of these squares and, consequently, any point within the confines of the circle.

So far this explanation has considered squares and circles. In practical applications, very few areas turn out to be exactly square, and circular areas are extremely rare. Designers deal generally with rectangles of odd dimensions and corners of rooms or areas formed by wall intercepts, where spacing to one wall is less than one-half the listed spacing. To simplify the rest of this explanation, the use of a detector with a listed spacing of 9.1 m × 9.1 m (30 ft × 30 ft) should be considered. The principles derived are equally applicable to other types.

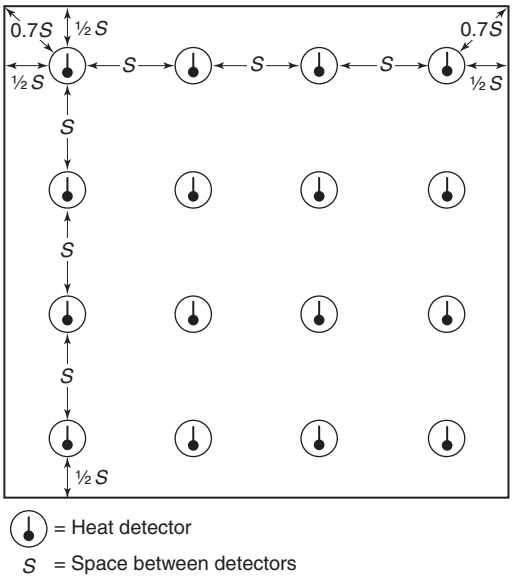

FIGURE A.5.6.5.1(a) Spot-Type Heat Detectors.

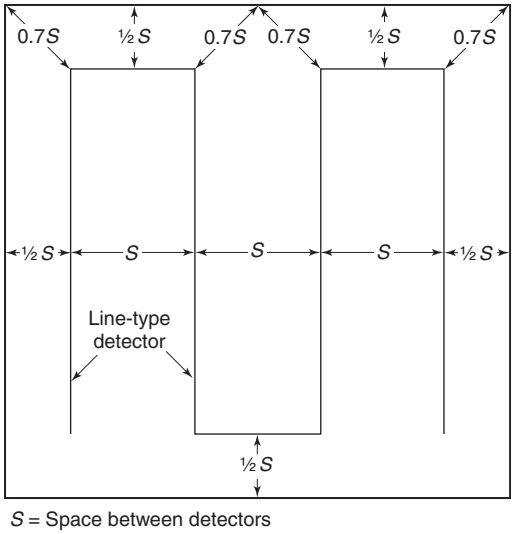

FIGURE A.5.6.5.1(b) Line-Type Detectors — Spacing Layouts, Smooth Ceiling.

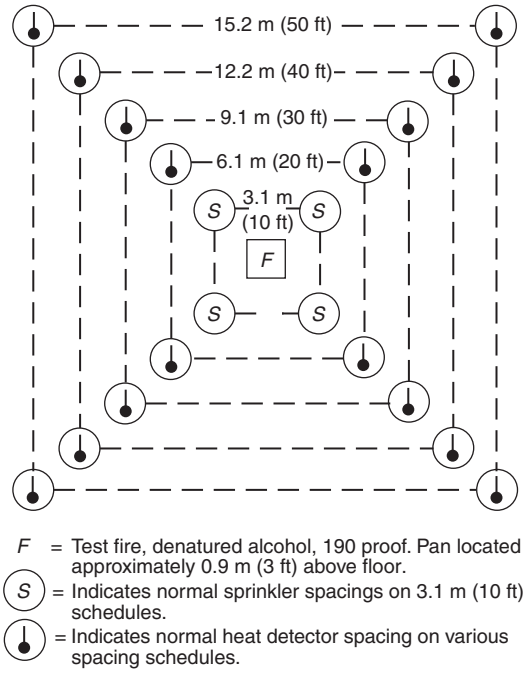

FIGURE A.5.6.5.1(c) Fire Test Layout.

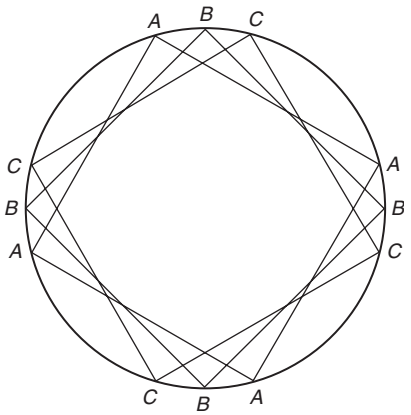

FIGURE A.5.6.5.1(d) Detector Covering any Square Laid Out in the Confines of a Circle in Which the Radius Is 0.7 Times the Listed Spacing.

Figure A.5.6.5.1(g) illustrates the derivation of this concept. In Figure A.5.6.5.1(g), a detector is placed in the center of a circle with a radius of 6.4 m (0.7 × 9.1 m) [21 ft (0.7 × 30 ft)]. A series of rectangles with one dimension less than the permitted maximum of 9.1 m (30 ft) is constructed within the circle. The following conclusions can be drawn:

(1) As the smaller dimension decreases, the longer dimension can be increased beyond the linear maximum spacing of the detector with no loss in detection efficiency.
(2) A single detector covers any area that fits within the circle. For a rectangle, a single, properly located detector may be permitted, provided the diagonal of the rectangle does not exceed the diameter of the circle.

Copyright National Fire Protection Association
Provided by IHS under license with NFPA
No reproduction or networking permitted without license from IHS
Not for Resale

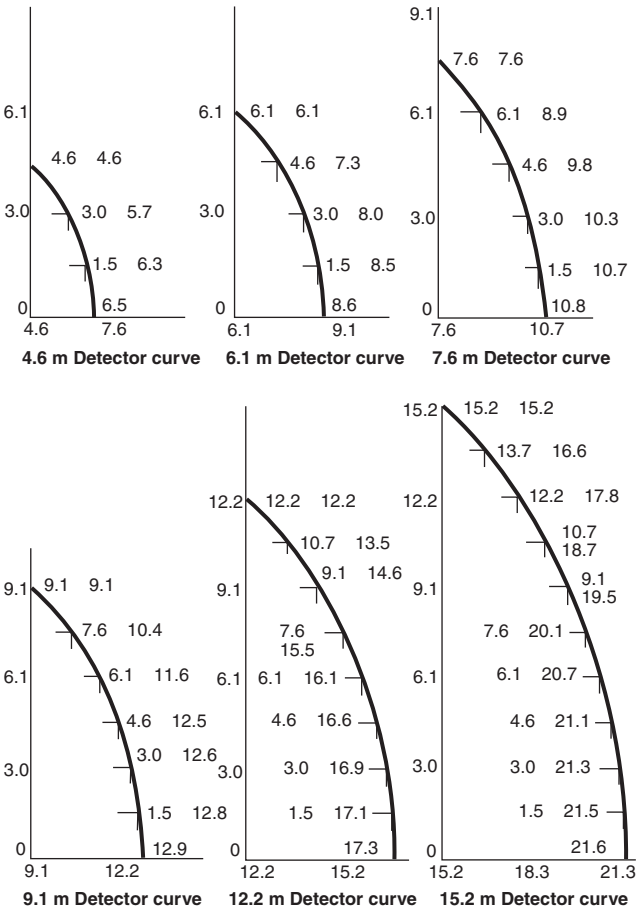

FIGURE A.5.6.5.1(e) Typical Rectangles for Detector Curves of 4.57 m to 15.24 m.

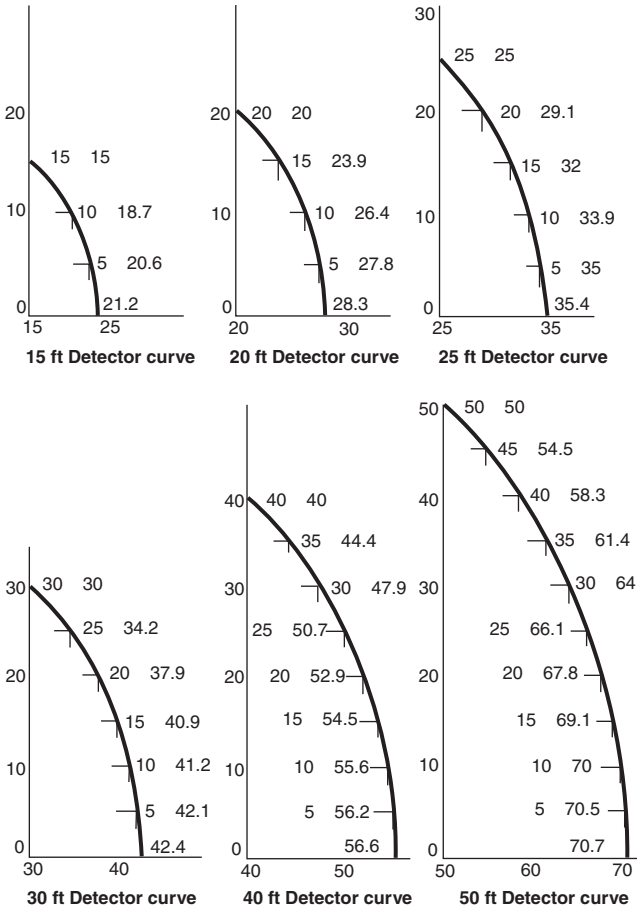

FIGURE A.5.6.5.1(f) Typical Rectangles for Detector Curves of 15 ft to 50 ft.

(3) Relative detector efficiency actually is increased, because the area coverage in square meters is always less than the 83.6 m^2 (900 ft^2) permitted if the full 9.1 m × 9.1 m (30 ft × 30 ft) square were to be utilized. The principle illustrated here allows equal linear spacing between the detector and the fire, with no recognition for the effect of reflection from walls or partitions, which in narrow rooms or corridors is of additional benefit. For detectors that are not centered, the longer dimension should always be used in laying out the radius of coverage.

Areas so large that they exceed the rectangular dimensions given in Figure A.5.6.5.1(g) require additional detectors. Often proper placement of detectors can be facilitated by breaking down the area into multiple rectangles of the dimensions that fit most appropriately *[see Figure A.5.6.5.1(e) and Figure A.5.6.5.1(f)]*. For example, refer to Figure A.5.6.5.1.2. A corridor 3 m (10 ft) wide and up to 25 m (82 ft) long can be covered with two 9.1 m (30 ft) spot-type detectors. An area 12.2 m (40 ft) wide and up to 22.6 m (74 ft) long can be covered with four spot-type detectors. Irregular areas need more careful planning to make certain that no spot on the ceiling is more than 6.4 m (21 ft) away from a detector. These points can be determined by striking arcs from the remote corner. Where any part of the area lies beyond the circle with a radius of 0.7 times the listed spacings, additional detectors are required.

A.5.6.5.1.2 Figure A.5.6.5.1.2 illustrates smoke or heat detector spacing layouts in irregular areas.

A.5.6.5.2 See Figure A.5.6.5.2 for an example of reduced spacing for solid joist construction.

A.5.6.5.3 The location and spacing of heat detectors should consider beam depth, ceiling height, beam spacing, and fire size.

If the ratio of beam depth (*D*) to ceiling height (*H*), (*D/H*), is greater than 0.10 and the ratio of beam spacing (*W*) to ceiling height (*H*), (*W/H*), is greater than 0.40, heat detectors should be located in each beam pocket.

If either the ratio of beam depth to ceiling height (*D/H*) is less than 0.10 or the ratio of beam spacing to ceiling height (*W/H*) is less than 0.40, heat detectors should be installed on the bottom of the beams.

A.5.6.5.4.1 Figure A.5.6.5.4.1 illustrates smoke or heat detector spacing for peaked-type sloped ceilings.

A.5.6.5.4.2 Figure A.5.6.5.4.2 illustrates smoke or heat detector spacing for shed-type sloped ceilings.

Copyright National Fire Protection Association
Provided by IHS under license with NFPA
No reproduction or networking permitted without license from IHS
Not for Resale

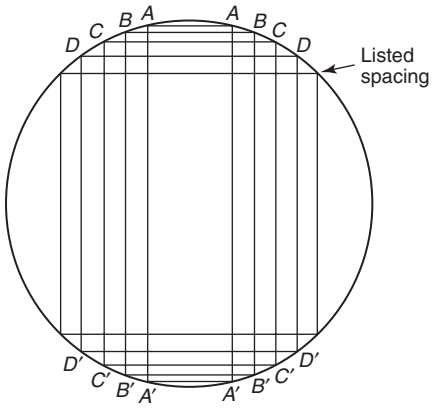

Rectangles

A = 3.1 m × 12.5 m = 38.1 m² (10 ft × 41 ft = 410 ft²)
B = 4.6 m × 11.9 m = 54.3 m² (15 ft × 39 ft = 585 ft²)
C = 6.1 m × 11.3 m = 68.8 m² (20 ft × 37 ft = 740 ft²)
D = 7.6 m × 10.4 m = 78.9 m² (25 ft × 34 ft = 850 ft²)
Listed spacing for heat detectors only = 9.1 m × 9.1 m = 83.6 m² (30 ft × 30 ft = 900 ft²)

Note: Smoke detectors are not listed for spacing. Use manufacturer's coverage recommendations and this figure.

FIGURE A.5.6.5.1(g) Detector Spacing, Rectangular Areas.

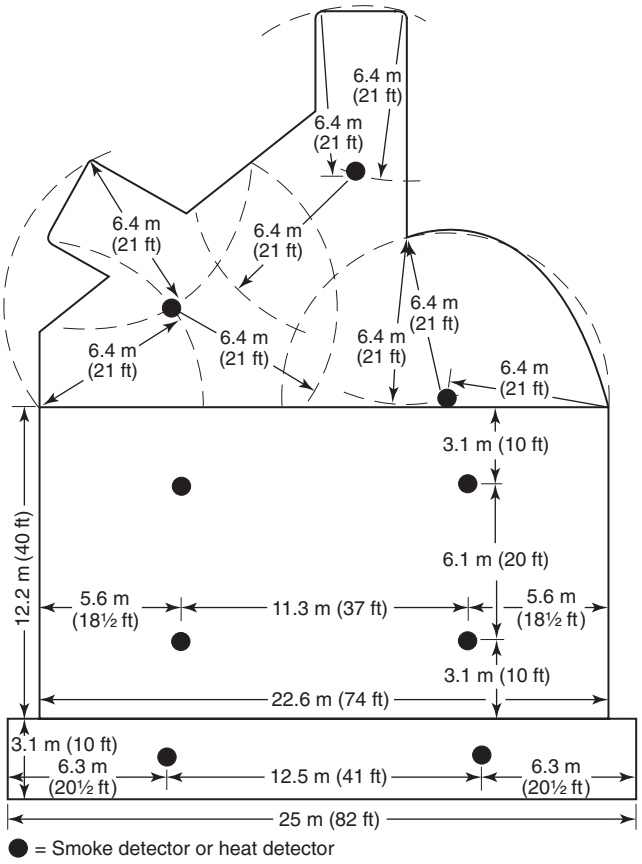

FIGURE A.5.6.5.1.2 Smoke or Heat Detector Spacing Layout in Irregular Areas.

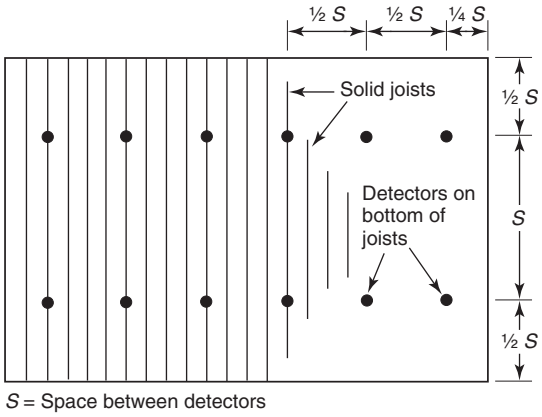

FIGURE A.5.6.5.2 Detector Spacing Layout, Solid Joist Construction.

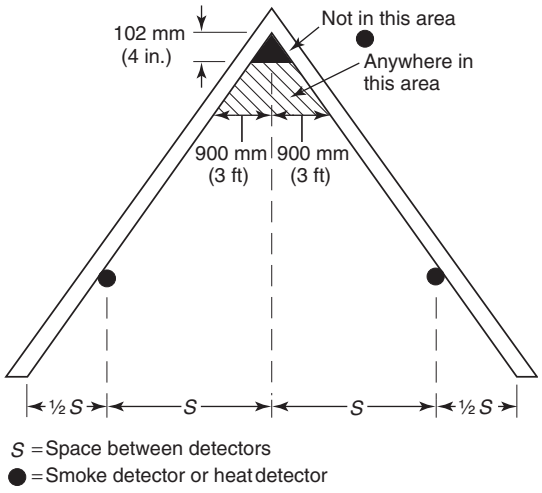

FIGURE A.5.6.5.4.1 Smoke or Heat Detector Spacing Layout, Sloped Ceilings (Peaked Type).

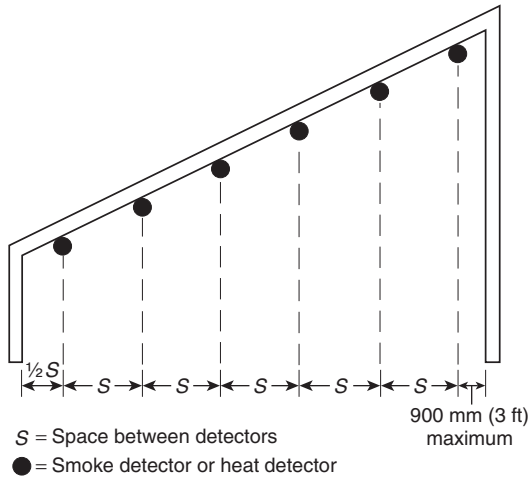

FIGURE A.5.6.5.4.2 Smoke or Heat Detector Spacing Layout, Sloped Ceilings (Shed Type).

Copyright National Fire Protection Association
Provided by IHS under license with NFPA
No reproduction or networking permitted without license from IHS
Not for Resale

A.5.6.5.5.1 Both 5.6.5.5.1 and Table 5.6.5.5.1 are constructed to provide detector performance on higher ceilings [to 9.1 m (30 ft) high] that is essentially equivalent to that which would exist with detectors on a 3 m (10 ft) ceiling.

The Fire Detection Institute Fire Test Report *(see Annex G)* is used as a basis for Table 5.6.5.5.1. The report does not include data on integration-type detectors. Pending development of such data, the manufacturer's published instructions will provide guidance.

Table 5.6.5.5.1 provides for spacing modification to take into account different ceiling heights for generalized fire conditions. Information regarding a design method that allows the designer to take into account ceiling height, fire size, and ambient temperatures is provided in Annex B.

A.5.6.5.5.2 The width of uniform temperature of the plume when it impinges on the ceiling is approximately 0.4 times the height above the fire, so reducing spacing below this level will not increase response time. For example, a detector with a listed spacing of 4.6 m (15 ft) or 21 m^2 (225 ft^2) need not be spaced closer than 3.7 m (12 ft) on a 9.1 m (30 ft) ceiling, even though Table 5.6.5.5.1 states that the spacing should be 0.34 m × 4.6 m, which equals 1.6 m (5.1 ft).

A.5.7.1.1 The performance objective statement should describe the purpose of the detector placement and the intended response of the fire alarm control unit to the detector activation. This statement can include a narrative description of the required response time of the detectors, a narrative of the sequence of operations, a tabular list of programming requirements, or some other method.

The performance objective of a fire detection system is usually expressed in terms of time and the size fire the system is intended to detect, measured in kilowatts (kW) or British thermal units per second (Btu/sec). Typically, the fire alarm system designer does not establish this criterion. It is usually obtained from the design documentation prepared by the designer responsible for the strategy of the structure as a whole. Where a prescriptive design is being provided, this requirement is fulfilled by stating in the design documentation that the design conforms to the prescriptive provisions of this Code.

A.5.7.1.2 The person designing an installation should keep in mind that, in order for a smoke detector to respond, the smoke has to travel from the point of origin to the detector. In evaluating any particular building or location, likely fire locations should be determined first. From each of these points of origin, paths of smoke travel should be determined. Wherever practicable, actual field tests should be conducted. The most desired locations for smoke detectors are the common points of intersection of smoke travel from fire locations throughout the building.

NOTE: This is one of the reasons that specific spacing is not assigned to smoke detectors by the testing laboratories.

A.5.7.1.3 In a performance-based design environment, the performance objectives for the fire alarm system are not established by the fire alarm system designer.

A fire protection strategy is developed to achieve those goals. General performance objectives are developed for the facility. These general objectives give rise to specific performance objectives for each fire protection system being employed in the facility. Consequently, the performance objectives and criteria for the fire alarm system are part of a much larger strategy that often relies on other fire protection features, working in concert with the fire alarm system to attain the overall fire protection goals for the facility.

In the performance-based design environment, the designer uses computational models to demonstrate that the spacing used for automatic fire detectors connected to the fire alarm system will achieve the objectives established by the system, by showing that the system meets the performance criteria established for the system in the design documentation. Consequently, it is imperative that the design objectives and performance criteria to which the system has been designed are clearly stated in the system documentation.

A.5.7.1.8 Product-listing standards include tests for temporary excursions beyond normal limits. In addition to temperature, humidity, and velocity variations, smoke detectors should operate reliably under such common environmental conditions as mechanical vibration, electrical interference, and other environmental influences. Tests for these conditions are also conducted by the testing laboratories in their listing program. In those cases in which environmental conditions approach the limits shown in Table A.5.7.1.8, the detector manufacturer's published instructions should be consulted for additional information and recommendations.

A.5.7.1.9 Smoke detectors can be affected by electrical and mechanical influences and by aerosols and particulate matter found in protected spaces. The location of detectors should be such that the influences of aerosols and particulate matter from sources such as those in Table A.5.7.1.9(a) are minimized. Similarly, the influences of electrical and mechanical factors shown in Table A.5.7.1.9(b) should be minimized. While it might not be possible to isolate environmental factors totally, an awareness of these factors during system layout and design favorably affects detector performance.

A.5.7.1.10 Stratification of air in a room can hinder air containing smoke particles or gaseous combustion products from reaching ceiling-mounted smoke detectors or fire–gas detectors.

Stratification occurs when air containing smoke particles or gaseous combustion products is heated by smoldering or burning material and, becoming less dense than the surrounding cooler air, rises until it reaches a level at which there is no longer a difference in temperature between it and the surrounding air.

Stratification also can occur when evaporative coolers are used, because moisture introduced by these devices can condense on smoke, causing it to fall toward the floor. Therefore, to ensure rapid response, it might be necessary to install smoke detectors on sidewalls or at locations below the ceiling.

In installations where detection of smoldering or small fires is desired and where the possibility of stratification exists, consideration should be given to mounting a portion of the detectors below the ceiling. In high-ceiling areas, projected beam–type or air sampling–type detectors at different levels also should be considered. *(See Figure A.5.7.1.10.)*

A.5.7.2 Throughout this Code, smoke detector sensitivity is referred to in terms of the percent obscuration required to alarm or produce a signal. Smoke detectors are tested using various smoke sources that have different characteristics (e.g., color, particle size, number of particles, particle shape). Unless otherwise specified, this Code, the manufacturers, and the listing agencies report and use the percent obscuration produced using a specific type of gray smoke. Actual detector response will vary when the characteristics of the smoke reaching the detector is different from the smoke used in testing and reporting detector sensitivity.

Copyright National Fire Protection Association
Provided by IHS under license with NFPA
No reproduction or networking permitted without license from IHS
Not for Resale

Table A.5.7.1.8 Environmental Conditions that Influence Smoke Detector Response

Detection Protection	Air Velocity >91.44 m/min (>300 ft/min)	Altitude >914.4 m (>3000 ft)	Humidity >93% RH	Temp. <0°C >37.8°C (<32°F >100°F)	Color of Smoke
Ion	X	X	X	X	O
Photo	O	O	X	X	X
Beam	O	O	X	X	O
Air sampling	O	O	X	X	O

X: Can affect detector response. O: Generally does not affect detector response.

Table A.5.7.1.9(a) Common Sources of Aerosols and Particulate Matter Moisture

Moisture	Humid outside air Humidifiers Live steam Showers Slop sink Steam tables Water spray
Combustion Products and Fumes	Chemical fumes Cleaning fluids Cooking equipment Curing Cutting, welding, and brazing Dryers Exhaust hoods Fireplaces Machining Ovens Paint spray
Atmospheric Contaminants	Corrosive atmospheres Dust or lint Excessive tobacco smoke Heat treating Linen and bedding handling Pneumatic transport Sawing, drilling, and grinding Textile and agricultural processing
Engine Exhaust	Diesel trucks and locomotives Engines not vented to the outside Gasoline forklift trucks
Heating Element with Abnormal Conditions	Dust accumulations Improper exhaust Incomplete combustion

Table A.5.7.1.9(b) Sources of Electrical and Mechanical Influences on Smoke Detectors

Electrical Noise and Transients	Airflow
Vibration or shock	Gusts
Radiation	Excessive velocity
Radio frequency	
Intense light	
Lightning	
Electrostatic discharge	
Power supply	

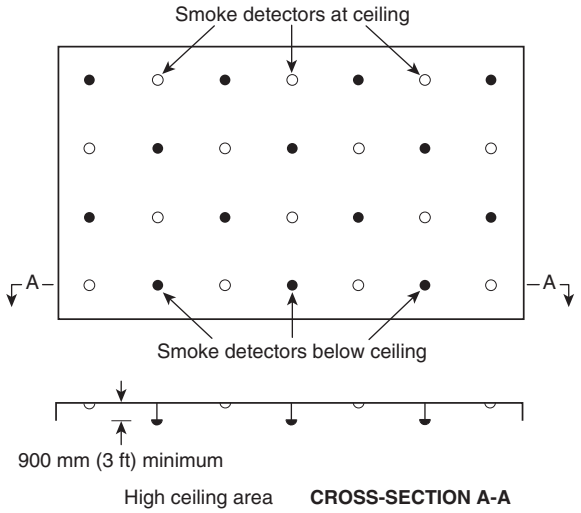

FIGURE A.5.7.1.10 Smoke Detector Layout Accounting for Stratification.

A.5.7.2.1 The production sensitivity range should only be used as a benchmark for testing and should not be used as the sole basis for selection of devices. The percent per foot sensitivity marked on the smoke detector is derived from testing in a smoke chamber, usually referred to as the UL 268 Smoke Box. The measurements derived from this measurement apparatus are only valid in the context of the apparatus and cannot be used outside the context of the smoke box. The polychromatic light source employed in the smoke box results in measurements that are highly dependent upon smoke color and does not account for variations in light transmission as a function of wavelength that occurs as fuels and fire ventilation rates change or as smoke ages. Furthermore, the measurement apparatus uses a measurement of light obscuration by smoke to infer a measure of light reflectance when there is no correlation between these two optical characteristics.

Copyright National Fire Protection Association
Provided by IHS under license with NFPA
No reproduction or networking permitted without license from IHS
Not for Resale

A.5.7.3.1 Except in the case of smoldering, low-energy fires, all smoke detectors, regardless of the type of technology, usually rely on the plume and ceiling jet produced by the fire to transport the smoke upward and across the ceiling to the detector, sampling port, or projected sensing light beam. Once sufficient concentration is attained at the detector, sampling port, or sensing light beam location and, in the case of spot-type detectors, sufficient flow velocity is attained to overcome the flow resistance into the sensing chamber, the detector responds with an alarm signal. Detectors are usually mounted at the ceiling plane to take advantage of the flow provided by the plume and the ceiling jet. A hot, energetic fire produces large plume velocities and temperatures and hot, fast ceiling jets. This minimizes the time it takes for the smoke to travel to the detector. A smoldering fire produces little, if any plume and no appreciable ceiling jet. Far more time elapses between ignition and detection under this circumstance.

A.5.7.3.2 In high-ceiling areas, such as atriums, where spot-type smoke detectors are not accessible for periodic maintenance and testing, projected beam–type or air sampling–type detectors should be considered where access can be provided.

A.5.7.3.2.1 Refer to Figure A.5.6.3.1 for an example of proper mounting for detectors.

A.5.7.3.2.2 Figure A.5.7.3.2.2 illustrates under-floor mounting installations.

A.5.7.3.2.3.1 The 9.1 m (30 ft) spacing is a guide for prescriptive designs. The use of such a spacing is based upon customary practice in the fire alarm community.

Where there are explicit performance objectives for the response of the smoke detection system, the performance-based design methods outlined in Annex B should be used.

A.5.7.3.2.3.5 This is useful in calculating locations in corridors or irregular areas *(see A.5.6.5.1 and Figure A.5.6.5.1.2)*. For irregularly shaped areas, the spacing between detectors can be greater than the selected spacing, provided the maximum spacing from a detector to the farthest point of a sidewall or corner within its zone of protection is not greater than 0.7 times the selected spacing (0.7*S*).

A.5.7.3.2.4 Detectors are placed at reduced spacings at right angles to joists or beams in an attempt to ensure that detection time is equivalent to that which would be experienced on a flat ceiling. It takes longer for the combustion products (smoke or heat) to travel at right angles to beams or joists because of the phenomenon wherein a plume from a relatively hot fire with significant thermal lift tends to fill the pocket between each beam or joist before moving to the next beam or joist.

Though it is true that this phenomenon might not be significant in a small smoldering fire where there is only enough thermal lift to cause stratification at the bottom of the joists, reduced spacing is still recommended to ensure that detection time is equivalent to that which would exist on a flat ceiling, even in the case of a hotter type of fire.

A.5.7.3.2.4.2(3) The geometry and reservoir effect is a significant factor that contributes to the development of velocity, temperature, and smoke obscuration conditions at smoke detectors located on the ceiling in beam pocket areas or at the bottom of beams as smoke collected in the reservoir volume spills into adjacent pockets. The waffle- or pan-type ceiling created by beams or solid joists, although retarding the initial flow of smoke, results in increased optical density, temperature rise, and gas velocities comparable to unconfined smooth ceilings.

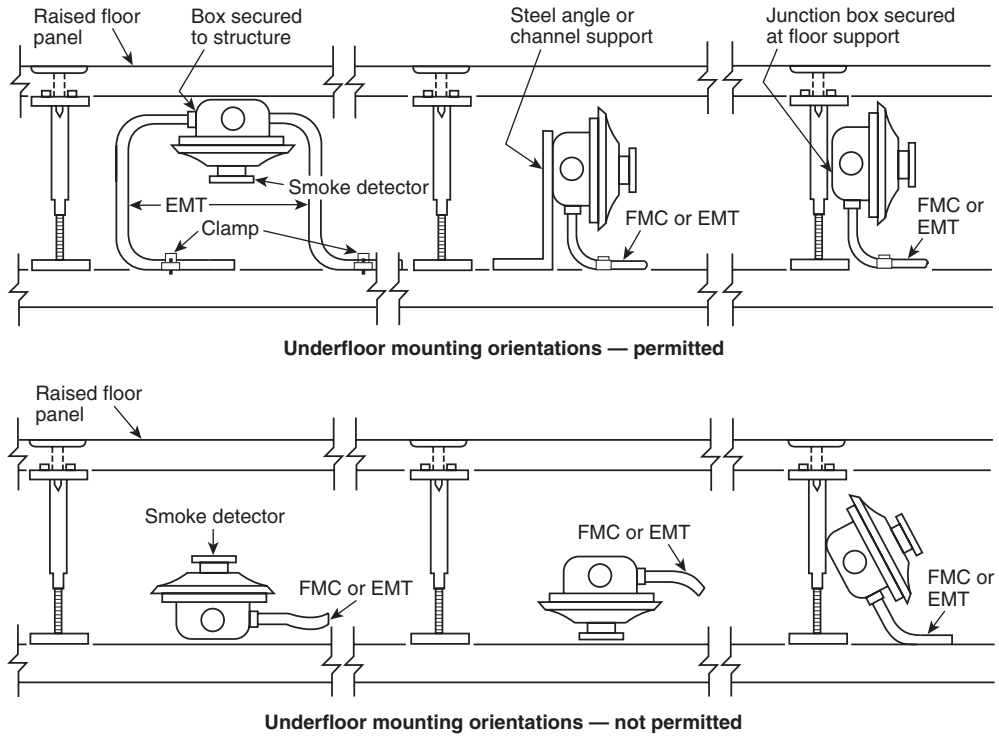

FIGURE A.5.7.3.2.2 Mounting Installations Permitted *(top)* and Not Permitted *(bottom)*.

Copyright National Fire Protection Association
Provided by IHS under license with NFPA
No reproduction or networking permitted without license from IHS
Not for Resale

A.5.7.3.2.4.2(4) Corridor geometry is a significant factor that contributes to the development of velocity, temperature, and smoke obscuration conditions at smoke detectors located along a corridor. This is based on the fact that the ceiling jet is confined or constrained by the nearby walls without opportunity for entrainment of air. For corridors of approximately 4.5 m (15 ft) in width and for fires of approximately 100 kW or greater, modeling has demonstrated that the performance of smoke detectors in corridors with beams has been shown to be comparable to spot smoke detector spacing on an unconfined smooth ceiling surface.

A.5.7.3.2.4.3 The spacing guidelines in 5.7.3.2.4.3 are based on a detection design fire of 100 kW. For detection at a larger 1 MW fire, the following spacings should be used:

(1) For beamed ceilings with beams running parallel to (up) the slope, with slopes 10 degrees or less, spacing for flat-beamed ceilings should be used. For ceilings with slopes greater than 10 degrees, twice the smooth ceiling spacing should be used in the direction parallel to (up) the slopes, and one-half the spacing should be used in the direction perpendicular to (across) the slope. For slopes greater than 10 degrees, the detectors located at a distance of one-half the spacing from the low end are not required. Spacing should be measured along the horizontal projection of the ceiling.

(2) For beamed ceilings with beams running perpendicular to (across) the slope, for any slope, smooth ceiling spacing should be used in the direction parallel to the beams (across the slope), and one-half the smooth ceiling spacing should be used in the direction perpendicular to the beams (up the slope).

A.5.7.3.3.3 A single-pipe network has a shorter transport time than a multiple-pipe network of similar length pipe; however, a multiple-pipe system provides a faster smoke transport time than a single-pipe system of the same total length. As the number of sampling holes in a pipe increases, the smoke transport time increases. Where practicable, pipe run lengths in a multiple-pipe system should be nearly equal, or the system should be otherwise pneumatically balanced.

A.5.7.3.3.6 The air sampling–type detector system should be able to withstand dusty environments by either air filtering or electronic discrimination of particle size. The detector should be capable of providing optimal time delays of alarm outputs to eliminate nuisance alarms due to transient smoke conditions. The detector should also provide facilities for the connection of monitoring equipment for the recording of background smoke level information necessary in setting alert and alarm levels and delays.

A.5.7.3.4 On smooth ceilings, a spacing of not more than 18.3 m (60 ft) between projected beams and not more than one-half that spacing between a projected beam and a sidewall (wall parallel to the beam travel) should be used as a guide. Other spacing should be determined based on ceiling height, airflow characteristics, and response requirements.

In some cases, the light beam projector is mounted on one end wall, with the light beam receiver mounted on the opposite wall. However, it is also permitted to suspend the projector and receiver from the ceiling at a distance from the end walls not exceeding one-quarter the selected spacing (*S*). *(See Figure A.5.7.3.4.)*

A.5.7.3.4.8 Where the light path of a projected beam–type detector is abruptly interrupted or obscured, the unit should not initiate an alarm. It should give a trouble signal after verification of blockage.

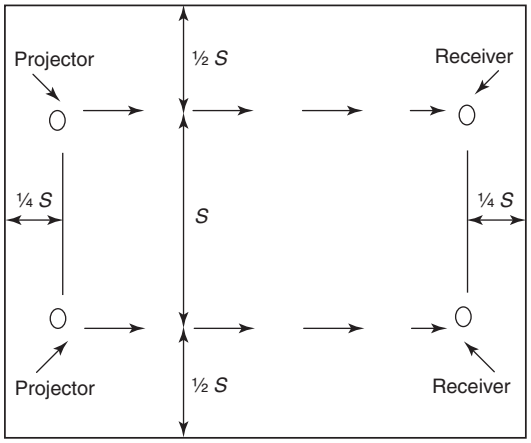

FIGURE A.5.7.3.4 Maximum Distance at Which Ceiling-Suspended Light Projector and Receiver Can Be Positioned from End Wall Is One-Quarter Selected Spacing *(S)*.

A.5.7.3.5 Refer to Figure A.5.6.5.4.1.

A.5.7.3.6 Refer to Figure A.5.6.5.4.2.

A.5.7.3.8 This requirement is based on the generally accepted principle that the ceiling jet is approximately 10 percent of the distance from the base of the fire to the ceiling. To this figure, an additional safety factor of 50 percent has been added. Performance-based methods are available to predict the impact of partitions on the flow of smoke to detectors and can be used to substantiate a less restrictive design criterion.

A.5.7.4.1 Detectors should not be located in a direct airflow or closer than 1 m (3 ft) from an air supply diffuser or return air opening. Supply or return sources larger than those commonly found in residential and small commercial establishments can require greater clearance to smoke detectors. Similarly, smoke detectors should be located farther away from high velocity air supplies.

A.5.7.4.2.2 Smoke might not be drawn into the duct or plenums when the ventilating system is shut down. Furthermore, when the ventilating system is operating, the detector(s) can be less responsive to a fire condition in the room of fire origin due to dilution by clean air.

A.5.7.5.1.2 Airflow through holes in the rear of a smoke detector can interfere with smoke entry to the sensing chamber. Similarly, air from the conduit system can flow around the outside edges of the detector and interfere with smoke reaching the sensing chamber. Additionally, holes in the rear of a detector provide a means for entry of dust, dirt, and insects, each of which can adversely affect the detector's performance.

A.5.7.5.2 For the most effective detection of fire in high-rack storage areas, detectors should be located on the ceiling above each aisle and at intermediate levels in the racks. This is necessary to detect smoke that is trapped in the racks at an early stage of fire development when insufficient thermal energy is released to carry the smoke to the ceiling. Earliest detection of smoke is achieved by locating the intermediate level detectors adjacent to alternate pallet sections

Copyright National Fire Protection Association
Provided by IHS under license with NFPA
No reproduction or networking permitted without license from IHS
Not for Resale

as shown in Figure A.5.7.5.2(a) and Figure A.5.7.5.2(b). The detector manufacturer's published instructions and engineering judgment should be followed for specific installations.

A projected beam–type detector can be permitted to be used in lieu of a single row of individual spot-type smoke detectors.

Sampling ports of an air sampling–type detector can be permitted to be located above each aisle to provide coverage that is equivalent to the location of spot-type detectors. The manufacturer's published instructions and engineering judgment should be followed for the specific installation.

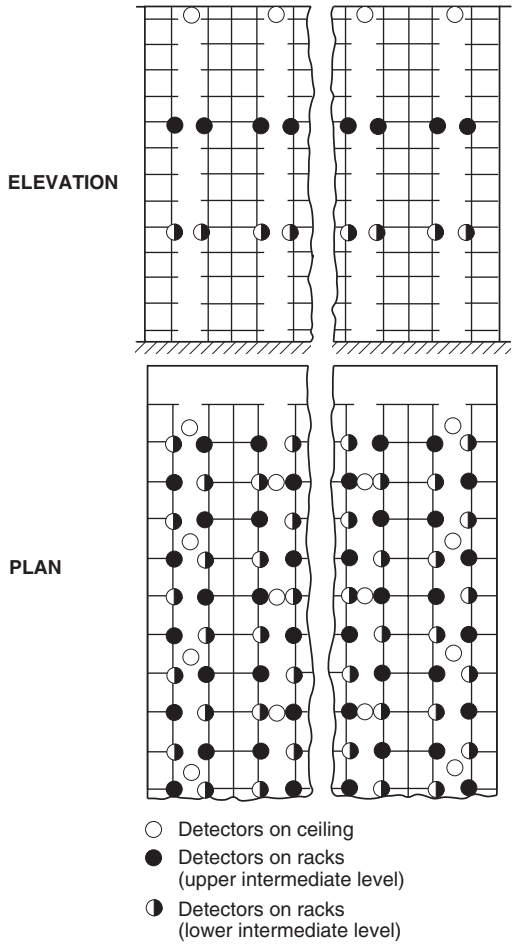

FIGURE A.5.7.5.2(a) Detector Location for Solid Storage (Closed Rack) in Which Transverse and Longitudinal Flue Spaces Are Irregular or Nonexistent, as for Slatted or Solid Shelved Storage.

A.5.7.5.3.3 Smoke detector spacing depends on the movement of air within the room.

A.5.7.6.3 Facility owners and managers might desire to use cameras and their images for purposes other than smoke detection. The intent of this paragraph is not to prohibit additional uses, but to ensure the integrity of the life safety smoke detection mission of the equipment.

A.5.7.6.4 Video image smoke detection control and software should be protected from tampering by passwords, software keys, or other means of limiting access to authorized/qualified personnel. Component settings include any control or programming that might affect the operation of coverage of the detection. This includes, but is not limited to, camera focus, field of view, motion sensitivity settings, and change of camera position.

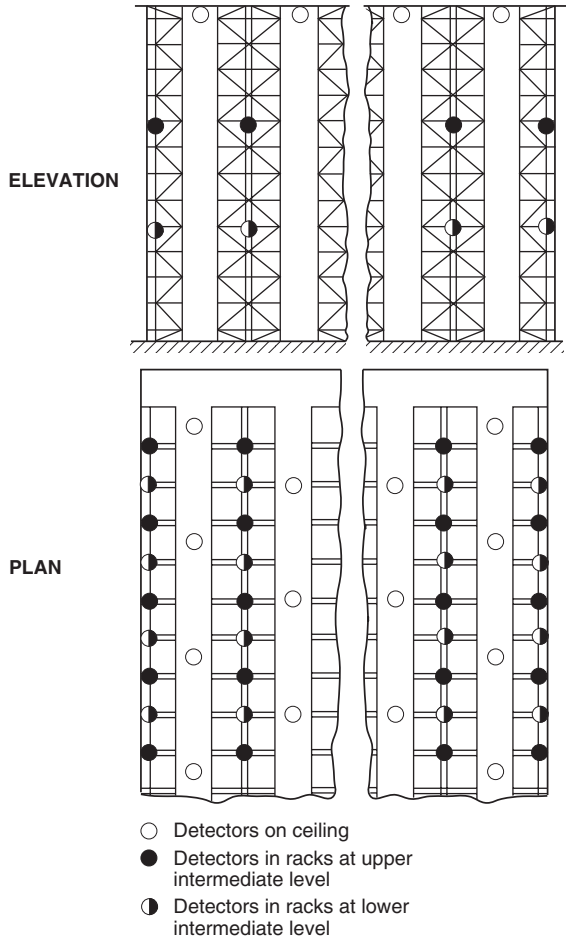

FIGURE A.5.7.5.2(b) Detector Location for Palletized Storage (Open Rack) or No Shelved Storage in Which Regular Transverse and Longitudinal Flue Spaces Are Maintained.

A.5.8.1 For the purpose of this Code, radiant energy includes the electromagnetic radiation emitted as a by-product of the combustion reaction, which obeys the laws of optics. This includes radiation in the ultraviolet, visible, and infrared portions of the spectrum emitted by flames or glowing embers. These portions of the spectrum are distinguished by wavelengths as shown in Table A.5.8.1.

Table A.5.8.1 Spectrum Wavelength Ranges

Radiant Energy	μm
Ultraviolet	0.1–0.35
Visible	0.36–0.75
Infrared	0.76–220

Conversion factors: 1.0 μm = 1000 nm = 10,000 Å.

Copyright National Fire Protection Association
Provided by IHS under license with NFPA
No reproduction or networking permitted without license from IHS
Not for Resale

A.5.8.2 Following are operating principles for two types of detectors:

(1) *Flame Detectors.* Ultraviolet flame detectors typically use a vacuum photodiode Geiger–Muller tube to detect the ultraviolet radiation that is produced by a flame. The photodiode allows a burst of current to flow for each ultraviolet photon that hits the active area of the tube. When the number of current bursts per unit time reaches a predetermined level, the detector initiates an alarm.

A single wavelength infrared flame detector uses one of several different photocell types to detect the infrared emissions in a single wavelength band that are produced by a flame. These detectors generally include provisions to minimize alarms from commonly occurring infrared sources such as incandescent lighting or sunlight. An ultraviolet/infrared (UV/IR) flame detector senses ultraviolet radiation with a vacuum photodiode tube and a selected wavelength of infrared radiation with a photocell and uses the combined signal to indicate a fire. These detectors need exposure to both types of radiation before an alarm signal can be initiated. A multiple wavelength infrared (IR/IR) flame detector senses radiation at two or more narrow bands of wavelengths in the infrared spectrum. These detectors electronically compare the emissions between the bands and initiate a signal where the relationship between the two bands indicates a fire.

(2) *Spark/Ember Detectors.* A spark/ember-sensing detector usually uses a solid state photodiode or phototransistor to sense the radiant energy emitted by embers, typically between 0.5 microns and 2.0 microns in normally dark environments. These detectors can be made extremely sensitive (microwatts), and their response times can be made very short (microseconds).

A.5.8.2.1 The radiant energy from a flame or spark/ember is comprised of emissions in various bands of the ultraviolet, visible, and infrared portions of the spectrum. The relative quantities of radiation emitted in each part of the spectrum are determined by the fuel chemistry, the temperature, and the rate of combustion. The detector should be matched to the characteristics of the fire.

Almost all materials that participate in flaming combustion emit ultraviolet radiation to some degree during flaming combustion, whereas only carbon-containing fuels emit significant radiation at the 4.35 micron (carbon dioxide) band used by many detector types to detect a flame. *(See Figure A.5.8.2.1.)*

The radiant energy emitted from an ember is determined primarily by the fuel temperature (Planck's law emissions) and the emissivity of the fuel. Radiant energy from an ember is primarily infrared and, to a lesser degree, visible in wavelength. In general, embers do not emit ultraviolet energy in significant quantities (0.1 percent of total emissions) until the ember achieves temperatures of 1727°C or 2000K (3240°F). In most cases, the emissions are included in the band of 0.8 microns to 2.0 microns, corresponding to temperatures of approximately 398°C to 1000°C (750°F to 1830°F).

Most radiant energy detectors have some form of qualification circuitry within them that uses time to help distinguish between spurious, transient signals and legitimate fire alarms. These circuits become very important where the anticipated fire scenario and the ability of the detector to respond to that anticipated fire are considered. For example, a detector that uses an integration circuit or a timing circuit to respond to the flickering light from a fire might not respond well to a deflagration resulting from the ignition of accumulated combustible vapors and gases, or where the fire is a spark that is traveling up to 100 m/sec (328 ft/sec) past the detector. Under these circumstances, a detector that has a high-speed response capability is most appropriate. On the other hand, in applications where the development of the fire is slower, a detector that uses time for the confirmation of repetitive signals is appropriate. Consequently, the fire growth rate should be considered in selecting the detector. The detector performance should be selected to respond to the anticipated fire.

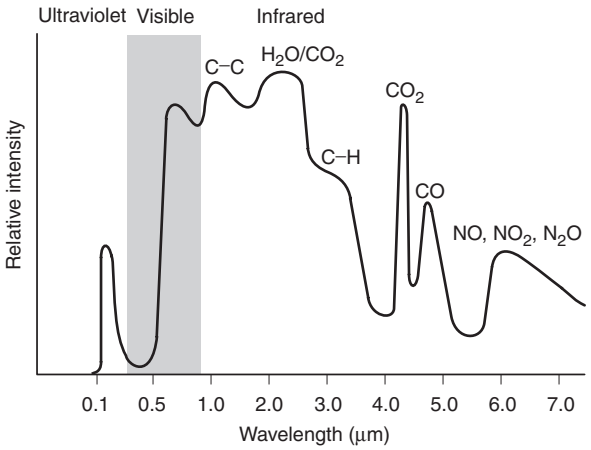

FIGURE A.5.8.2.1 Spectrum of a Typical Flame (Free-Burning Gasoline).

The radiant emissions are not the only criteria to be considered. The medium between the anticipated fire and the detector is also very important. Different wavelengths of radiant energy are absorbed with varying degrees of efficiency by materials that are suspended in the air or that accumulate on the optical surfaces of the detector. Generally, aerosols and surface deposits reduce the sensitivity of the detector. The detection technology used should take into account those normally occurring aerosols and surface deposits to minimize the reduction of system response between maintenance intervals. It should be noted that the smoke evolved from the combustion of middle and heavy fraction petroleum distillates is highly absorptive in the ultraviolet end of the spectrum. If using this type of detection, the system should be designed to minimize the effect of smoke interference on the response of the detection system.

The environment and ambient conditions anticipated in the area to be protected impact the choice of detector. All detectors have limitations on the range of ambient temperatures over which they will respond, consistent with their tested or approved sensitivities. The designer should make certain that the detector is compatible with the range of ambient temperatures anticipated in the area in which it is installed. In addition, rain, snow, and ice attenuate both ultraviolet and infrared radiation to varying degrees. Where anticipated, provisions should be made to protect the detector from accumulations of these materials on its optical surfaces.

A.5.8.2.2 Normal radiant emissions that are not from a fire can be present in the hazard area. When selecting a detector for an area, other potential sources of radiant emissions should be evaluated. Refer to A.5.8.2.1 for additional information.

Copyright National Fire Protection Association
Provided by IHS under license with NFPA
No reproduction or networking permitted without license from IHS
Not for Resale

A.5.8.3.1.1 All optical detectors respond according to the following theoretical equation:

$$S = \frac{kP^{-e\zeta d}}{d^2}$$

where:
S = radiant power reaching the detector
k = proportionality constant for the detector
P = radiant power emitted by the fire
e = Naperian logarithm base (2.7183)
ζ = extinction coefficient of air
d = distance between the fire and the detector

The sensitivity (S) typically is measured in nanowatts. This equation yields a family of curves similar to the one shown in Figure A.5.8.3.1.1.

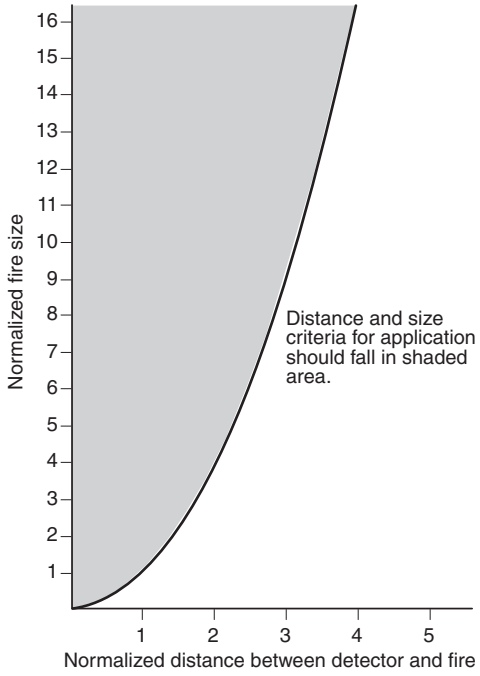

FIGURE A.5.8.3.1.1 Normalized Fire Size vs. Distance.

The curve defines the maximum distance at which the detector consistently detects a fire of defined size and fuel. Detectors should be employed only in the shaded area above the curve.

Under the best of conditions, with no atmospheric absorption, the radiant power reaching the detector is reduced by a factor of 4 if the distance between the detector and the fire is doubled. For the consumption of the atmospheric extinction, the exponential term zeta (ζ) is added to the equation. Zeta is a measure of the clarity of the air at the wavelength under consideration. Zeta is affected by humidity, dust, and any other contaminants in the air that are absorbent at the wavelength in question. Zeta generally has values between –0.001 and –0.1 for normal ambient air.

A.5.8.3.2.1 The following are types of application for which flame detectors are suitable:

(1) High-ceiling, open-spaced buildings such as warehouses and aircraft hangars
(2) Outdoor or semioutdoor areas where winds or drafts can prevent smoke from reaching a heat or smoke detector
(3) Areas where rapidly developing flaming fires can occur, such as aircraft hangars, petrochemical production areas, storage and transfer areas, natural gas installations, paint shops, or solvent areas
(4) Areas needing high fire risk machinery or installations, often coupled with an automatic gas extinguishing system
(5) Environments that are unsuitable for other types of detectors

Some extraneous sources of radiant emissions that have been identified as interfering with the stability of flame detectors include the following:

(1) Sunlight
(2) Lightning
(3) X-rays
(4) Gamma rays
(5) Cosmic rays
(6) Ultraviolet radiation from arc welding
(7) Electromagnetic interference (EMI, RFI)
(8) Hot objects
(9) Artificial lighting

A.5.8.3.2.3 The greater the angular displacement of the fire from the optical axis of the detector, the larger the fire must become before it is detected. This phenomenon establishes the field of view of the detector. Figure A.5.8.3.2.3 shows an example of the effective sensitivity versus angular displacement of a flame detector.

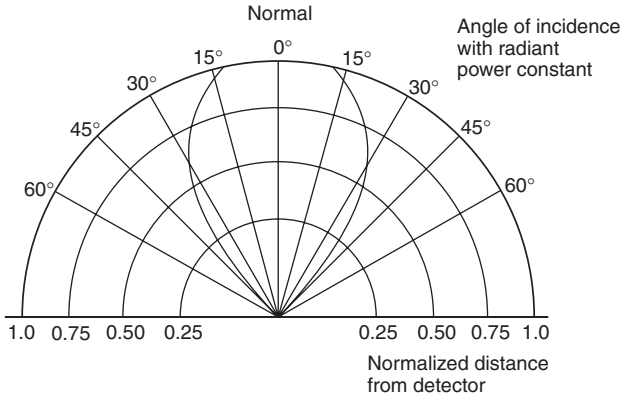

FIGURE A.5.8.3.2.3 Normalized Sensitivity vs. Angular Displacement.

A.5.8.3.2.4 Virtually all radiant energy–sensing detectors exhibit some kind of fuel specificity. If burned at uniform rates [J/sec (W)], different fuels emit different levels of radiant power in the ultraviolet, visible, and infrared portions of the spectrum. Under free-burn conditions, a fire of given surface area but of different fuels burns at different rates [J/sec (W)] and emits varying levels of radiation in each of the major portions of the spectrum. Most radiant energy detectors designed to detect flame are qualified on the basis of a defined fire under specific conditions. If employing these detectors for fuels other than the defined fire, the designer should make certain that the appropriate adjustments to the maximum distance between the detector and the fire are made consistent with the fuel specificity of the detector.

--`,,```,,,,````-`-`,,`,,`,`,,`---
Copyright National Fire Protection Association
Provided by IHS under license with NFPA
No reproduction or networking permitted without license from IHS
Not for Resale

A.5.8.3.2.6 This requirement has been satisfied by the following means:

(1) Lens clarity monitoring and cleaning where a contaminated lens signal is rendered
(2) Lens air purge

The need to clean detector windows can be reduced by the provision of air purge devices. These devices are not foolproof, however, and are not a replacement for regular inspection and testing. Radiant energy–sensing detectors should not be placed in protective housings (e.g., behind glass) to keep them clean, unless such housings are listed for the purpose. Some optical materials are absorptive at the wavelengths used by the detector.

A.5.8.3.3.1 Spark/ember detectors are installed primarily to detect sparks and embers that could, if allowed to continue to burn, precipitate a much larger fire or explosion. Spark/ember detectors are typically mounted on some form of duct or conveyor, monitoring the fuel as it passes by. Usually, it is necessary to enclose the portion of the conveyor where the detectors are located, as these devices generally require a dark environment. Extraneous sources of radiant emissions that have been identified as interfering with the stability of spark/ember detectors include the following:

(1) Ambient light
(2) Electromagnetic interference (EMI, RFI)
(3) Electrostatic discharge in the fuel stream

A.5.8.3.3.2 There is a minimum ignition power (watts) for all combustible dusts. If the spark or ember is incapable of delivering that quantity of power to the adjacent combustible material (dust), an expanding dust fire cannot occur. The minimum ignition power is determined by the fuel chemistry, fuel particle size, fuel concentration in air, and ambient conditions such as temperature and humidity.

A.5.8.3.3.4 As the distance between the fire and the detector increases, the radiant power reaching the detector decreases. Refer to A.5.8.3.1.1 for additional information.

A.5.8.3.3.5 The greater the angular displacement of the fire from the optical axis of the detector, the larger the fire must become before it is detected. This phenomenon establishes the field of view of the detector. Figure A.5.8.3.2.3 shows an example of the effective sensitivity versus angular displacement of a flame detector.

A.5.8.3.3.6 This requirement has been satisfied by the following means:

(1) Lens clarity monitoring and cleaning where a contaminated lens signal is rendered
(2) Lens air purge

A.5.8.5.3 Facility owners and managers might desire to use cameras and their images for purposes other than flame detection. The intent of this paragraph is not to prohibit additional uses, but to ensure the integrity of the life safety flame detection mission of the equipment.

A.5.8.5.4 Video image flame detection control and software should be protected from tampering by passwords, software keys, or other means of limiting access to authorized/qualified personnel. Component settings include any control or programming that might affect the operation of coverage of the detection. This includes, but is not limited to, camera focus, field of view, motion sensitivity settings, and change of camera position.

A.5.10.2 The performance characteristics of the detector and the area into which it is to be installed should be evaluated to minimize nuisance alarms or conditions that would interfere with operation.

A.5.11.1 Piping between the sprinkler system and a pressure actuated alarm-initiating device should be galvanized or of nonferrous metal or other approved corrosion-resistant material of not less than 9.5 mm (3⁄8 in.) nominal pipe size.

A.5.11.2 The waterflow device should be field adjusted so that an alarm is initiated no more than 90 seconds after a sustained flow of at least 40 L/min (10 gpm).

Features that should be investigated to minimize alarm response time include the following:

(1) Elimination of trapped air in the sprinkler system piping
(2) Use of an excess pressure pump
(3) Use of pressure drop alarm-initiating devices
(4) A combination thereof

Care should be used when choosing waterflow alarm-initiating devices for hydraulically calculated looped systems and those systems using small orifice sprinklers. Such systems might incorporate a single point flow of significantly less than 40 L/min (10 gpm). In such cases, additional waterflow alarm-initiating devices or the use of pressure drop-type waterflow alarm-initiating devices might be necessary.

Care should be used when choosing waterflow alarm-initiating devices for sprinkler systems that use on–off sprinklers to ensure that an alarm is initiated in the event of a waterflow condition. On–off sprinklers open at a predetermined temperature and close when the temperature reaches a predetermined lower temperature. With certain types of fires, waterflow might occur in a series of short bursts of a duration of 10 seconds to 30 seconds each. An alarm-initiating device with retard might not detect waterflow under these conditions. An excess pressure system or a system that operates on pressure drop should be considered to facilitate waterflow detection on sprinkler systems that use on–off sprinklers.

Excess pressure systems can be used with or without alarm valves. The following is a description of one type of excess pressure system with an alarm valve.

An excess pressure system with an alarm valve consists of an excess pressure pump with pressure switches to control the operation of the pump. The inlet of the pump is connected to the supply side of the alarm valve, and the outlet is connected to the sprinkler system. The pump control pressure switch is of the differential type, maintaining the sprinkler system pressure above the main pressure by a constant amount. Another switch monitors low sprinkler system pressure to initiate a supervisory signal in the event of a failure of the pump or other malfunction. An additional pressure switch can be used to stop pump operation in the event of a deficiency in water supply. Another pressure switch is connected to the alarm outlet of the alarm valve to initiate a waterflow alarm signal when waterflow exists. This type of system also inherently prevents false alarms due to water surges. The sprinkler retard chamber should be eliminated to enhance the detection capability of the system for short duration flows.

A.5.12 Alarm initiation can be accomplished by devices that detect the following:

(1) Flow of water in foam systems
(2) Pump activation
(3) Differential pressure

Copyright National Fire Protection Association
Provided by IHS under license with NFPA
No reproduction or networking permitted without license from IHS
Not for Resale

(4) Pressure (e.g., clean agent systems, carbon dioxide systems, and wet/dry chemical systems)
(5) Mechanical operation of a release mechanism

A.5.13.5 Manual fire alarm boxes should be of contrasting color to the background on which they are mounted.

A.5.13.8 It is not the intent of 5.13.8 to require manual fire alarm boxes to be attached to movable partitions or to equipment, nor to require the installation of permanent structures for mounting purposes only.

A.5.16 Refer to NFPA *101, Life Safety Code*, for the definition of smoke compartment; NFPA 90A, *Standard for the Installation of Air-Conditioning and Ventilating Systems*, for the definition of duct systems; and NFPA 92A, *Standard for Smoke-Control Systems Utilizing Barriers and Pressure Differences*, for the definition of smoke zone.

A.5.16.1 Smoke detectors located in an open area(s) should be used rather than duct-type detectors because of the dilution effect in air ducts. Active smoke management systems installed in accordance with NFPA 92A, *Standard for Smoke-Control Systems Utilizing Barriers and Pressure Differences*, or NFPA 92B, *Standard for Smoke Management Systems in Malls, Atria, and Large Spaces*, should be controlled by total coverage open area detection.

A.5.16.2 Dilution of smoke-laden air by clean air from other parts of the building or dilution by outside air intakes can allow high densities of smoke in a single room with no appreciable smoke in the air duct at the detector location. Smoke might not be drawn from open areas if air-conditioning systems or ventilating systems are shut down.

A.5.16.3 Smoke detectors can be applied in order to initiate control of smoke spread for the following purposes:

(1) Prevention of the recirculation of dangerous quantities of smoke within a building
(2) Selective operation of equipment to exhaust smoke from a building
(3) Selective operation of equipment to pressurize smoke compartments
(4) Operation of doors and dampers to close the openings in smoke compartments

A.5.16.4.2 Smoke detectors are designed to sense the presence of particles of combustion, but depending on the sensing technology and other design factors, different detectors respond to different types of particles. Detectors based on ionization detection technology are most responsive to smaller, invisible sub-micron sized particles. Detectors based on photoelectric technology, by contrast, are most responsive to larger visible particles.

It is generally accepted that particle size distribution varies from sub-micron diameter particles predominant in the proximity of the flame of a flaming fire to particles one or more orders of magnitude larger, which are characteristic of smoke from a smoldering fire. The actual particle size distribution depends on a host of other variables including the fuel and its physical make-up, the availability of oxygen including air supply and fire–gas discharge, and other ambient conditions, especially humidity. Moreover, the particle size distribution is not constant, but as the fire gases cool, the sub-micron particles agglomerate and the very large ones precipitate. In other words, as smoke travels away from the fire source, the particle size distribution shows a relative decrease in smaller particles. Water vapor, which is abundantly present in most fires, when cooled sufficiently will condense to form fog particles — an effect frequently seen above tall chimneys. Because water condensation is basically clear in color, when it is mixed with other smoke particles, it can be expected to lighten the color of the mixture.

In almost every fire scenario in an air-handling system, the point of detection will be some distance from the fire source; therefore, the smoke will be cooler and more visible because of the growth of sub-micron particles into larger particles due to agglomeration and recombination. For these reasons, photoelectric detection technology has advantages over ionization detection technology in air duct system applications.

A.5.16.4.2.2 Detectors listed for the air velocity present can be permitted to be installed at the opening where the return air enters the common return air system. The detectors should be installed up to 300 mm (12 in.) in front of or behind the opening and spaced according to the following opening dimensions *[see Figure A.5.16.4.2.2(a) through Figure A.5.16.4.2.2(c)]*:

(1) *Width.*
   (a) Up to 914 mm (36 in.) — One detector centered in opening
   (b) Up to 1.829 m (72 in.) — Two detectors located at the one-quarter points of the opening
   (c) Over 1.829 m (72 in.) — One additional detector for each full 610 mm (24 in.) of opening
(2) *Depth.* The number and spacing of the detector(s) in the depth (vertical) of the opening should be the same as those given for the width (horizontal) in A.5.16.4.2.2(1).
(3) *Orientation.* Detectors should be oriented in the most favorable position for smoke entry with respect to the direction of airflow. The path of a projected beam–type detector across the return air openings should be considered equivalent in coverage to a row of individual detectors.

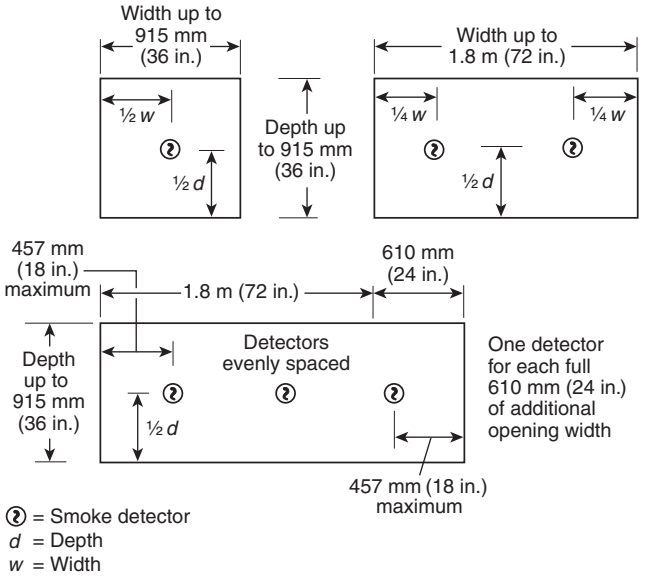

FIGURE A.5.16.4.2.2(a) Location of a Smoke Detector(s) in Return Air System Openings for Selective Operation of Equipment.

Copyright National Fire Protection Association
Provided by IHS under license with NFPA
No reproduction or networking permitted without license from IHS
Not for Resale

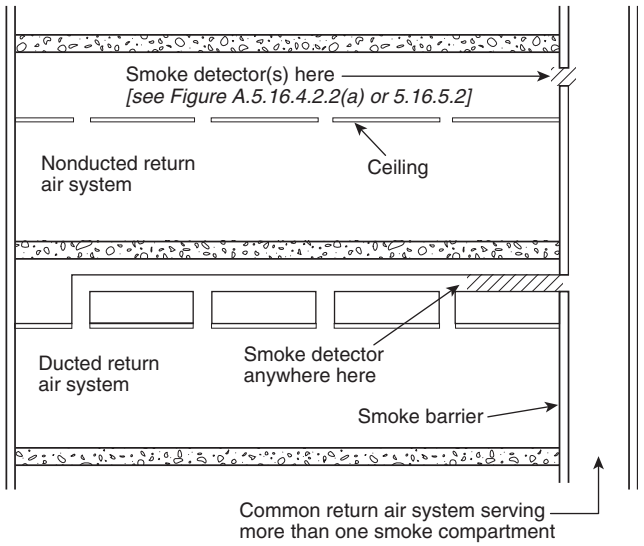

FIGURE A.5.16.4.2.2(b) Location of a Smoke Detector(s) in Return Air Systems for Selective Operation of Equipment.

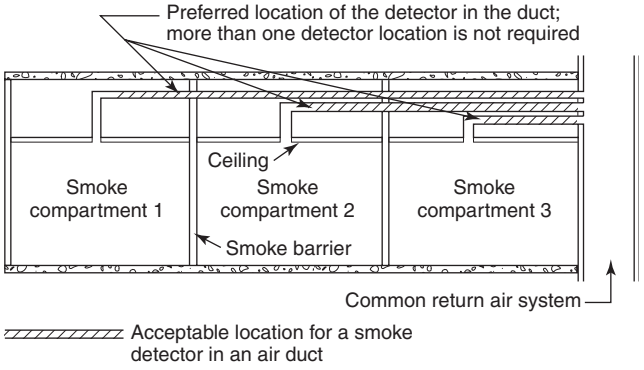

FIGURE A.5.16.4.2.2(c) Detector Location in a Duct that Passes Through Smoke Compartments Not Served by the Duct.

A.5.16.5.2 Where duct detectors are used to initiate the operation of smoke dampers, they should be located so that the detector is between the last inlet or outlet upstream of the damper and the first inlet or outlet downstream of the damper.

In order to obtain a representative sample, stratification and dead air space should be avoided. Such conditions could be caused by return duct openings, sharp turns, or connections, as well as by long, uninterrupted straight runs.

In return air systems, the requirements of 5.16.4.2.2 take precedence over these considerations. *[See Figure A.5.16.5.2(a) and Figure A.5.16.5.2(b).]*

Usually, it is necessary to manage smoke flow in buildings. Duct smoke detectors are used to shut down HVAC systems or initiate smoke management.

Filters have a serious effect on the performance of duct smoke detectors. The location of the detector relative to the filter and the source of smoke must be considered during the design process. Where smoke detectors are installed downstream from filters, they should be deemed to serve the purpose of providing an alarm indication of the occurrence of a fire in the HVAC unit (filters, belts, heat exchangers, etc.). These detectors usually serve the purpose of protecting building occupants from the smoke produced by an HVAC unit fire, or smoke ingress via the fresh air intake for the unit. They cannot be expected to serve the purpose of providing detection for the return side of the system.

Where return side detection is required, that requirement should be fulfilled with separate detectors from those monitoring the supply side. In order to be effective, return air duct smoke detectors should be located such that there are no filters between them and the source of the smoke.

Sampling tubes should be oriented to overcome thermal stratification due to buoyancy of the smoke in the upper half of the duct. This condition occurs where duct velocities are low, buoyancy exceeds flow inertia, or the detector is installed close to the fire compartment. A vertical orientation of sampling tubes overcomes the effects of differential buoyancy.

Where a detector is installed on a duct serving a single fire compartment, where the buoyancy exceeds the flow inertia of the air in the duct and the sampling tube cannot be oriented vertically, then the effects of thermal stratification can be minimized by locating the detector sampling tube in the upper half of the duct.

The thermal stratification is not a concern where the detector is installed far from the fire compartment or where the smoke is at or close to the average temperature in the duct.

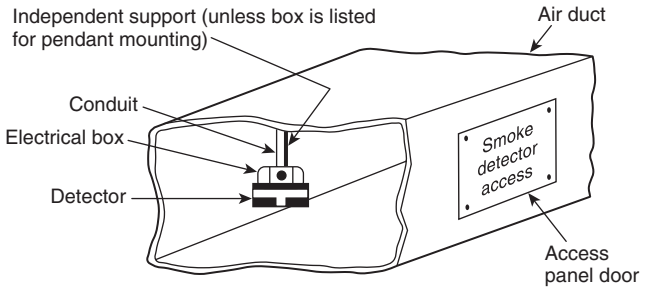

FIGURE A.5.16.5.2(a) Pendant-Mounted Air Duct Installation.

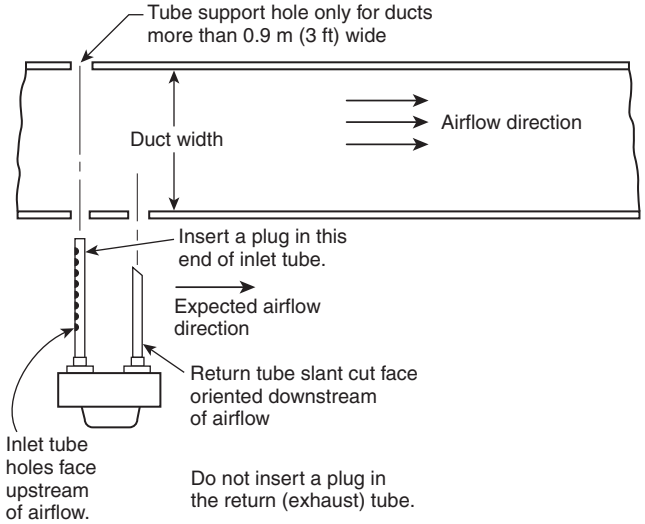

FIGURE A.5.16.5.2(b) Inlet Tube Orientation.

Copyright National Fire Protection Association
Provided by IHS under license with NFPA
No reproduction or networking permitted without license from IHS
Not for Resale

A.5.16.6.5.1.3 If the depth of wall section above the door is 1.520 m (60 in.) or greater, additional detectors might be required as indicated by an engineering evaluation.

A.6.1.1 It is intended that fire alarm systems and their components used for mass notification applications be covered by Chapter 6.

A.6.2.1 Systems can be installed for the purposes of life safety, property protection, or both. Evacuation or relocation is not a required output action for every system installed in accordance with Chapter 6.

A.6.2.2.2 A commonly used method of protecting against unauthorized changes can be described as follows (in ascending levels of access):

(1) *Access Level 1.* Access by persons who have a general responsibility for safety supervision, and who might be expected to investigate and initially respond to a fire alarm or trouble signal
(2) *Access Level 2.* Access by persons who have a specific responsibility for safety, and who are trained to operate the control unit
(3) *Access Level 3.* Access by persons who are trained and authorized to do the following:
    (a) Reconfigure the site-specific data held within the control unit, or controlled by it
    (b) Maintain the control unit in accordance with the manufacturer's published instructions and data
(4) *Access Level 4.* Access by persons who are trained and authorized either to repair the control unit or to alter its site-specific data or operating system program, thereby changing its basic mode of operation

A.6.2.3 Nonrequired fire alarm features are defined in 3.3.111. These are fire alarm systems or components that are not required by the building or fire codes and are installed voluntarily by a building owner to meet site-specific fire safety objectives. There is a need to properly document the nonrequired system and components. Nonrequired components must be operationally compatible in harmony with other required components and shall not be detrimental to the overall system performance. It is for this reason that 6.2.3.1 mandates that nonrequired (voluntary) systems and components meet the applicable installation, testing, and maintenance requirements of this Code. It is not the intent of the Code to have the installation of nonrequired (voluntary) systems or components trigger a requirement for the installation of additional fire alarm components or features in the building. For example, if a building owner voluntarily installs a fire alarm control unit to transmit sprinkler waterflow signals to a central station, that does not trigger a requirement to install other fire alarm system components or features, such as manual fire alarm boxes, occupant notification, or electronic supervision of sprinkler control valves. See also A.5.5.2.3 and A.7.1.5.

Alternatively, supervision and power requirements are required to be taken into account for the nonrequired components/systems on the required fire alarm systems.

A.6.3.3.2 Examples of dedicated function fire alarm systems would include an elevator recall control and supervisory control unit, as addressed in 6.16.3.2, or a system used specifically to monitor sprinkler waterflow and supervisory functions.

A.6.4.2 Class A circuits are considered to be more reliable than Class B circuits because they remain fully operational during the occurrence of a single open or a single ground fault, while Class B circuits remain operational only up to the location of an open fault. However, neither Class A nor Class B circuits remain operational during a wire-to-wire short.

For both Class A and Class B initiating device circuits, a wire-to-wire short is permitted to cause an alarm on the system based on the rationale that a wire-to-wire short is the result of a double fault (e.g., both circuit conductors have become grounded), while the Code only considers the consequences of single faults.

Limitation to Class A and Class B circuits only poses a more serious problem for signaling line circuits. Though a Class A signaling line circuit remains fully operational during the occurrence of a single open or single ground fault, a wire-to-wire short disables the entire circuit. The risk of such a catastrophic failure is unacceptable to many system designers, users, and authorities having jurisdiction. Using the style designation makes it possible to specify either full system operation during a wire-to-wire short (Style 7), or system degradation during a wire-to-wire short (Style 6), or a level of performance in between that of a Style 7 and a minimum function Class A circuit (Style 2).

A.6.4.2.2.2 A goal of 6.4.2.2.2 is to provide adequate separation between the outgoing and return cables. This separation is required to help ensure protection of the cables from physical damage. The recommended minimum separation to prevent physical damage is 305 mm (1 ft) where the cable is installed vertically and 1.22 m (4 ft) where the cable is installed horizontally.

A.6.5 Table 6.5 and Table 6.6.1 should be used as follows:

(1) It should be determined whether the initiating devices are directly connected as follows:
    (a) To the initiating device circuit
    (b) To a signaling line circuit interface on a signaling line circuit
    (c) To an initiating device circuit, which in turn is connected to a signaling line circuit interface on a signaling line circuit
(2) The prime purpose of the tables is to enable identification of minimum performance for styles of signaling line circuits. It is not the intention that the styles be construed as grades. That is, a Style 6 system is not superior to a Style 4 system, or vice versa. In fact, a particular style might better provide adequate and reliable signaling for an installation than a more complex style.
(3) Table 6.5 and Table 6.6.1 allow users, designers, manufacturers, and the authority having jurisdiction to identify minimum performance of systems by determining the trouble and alarm signals received at the control unit for the specified abnormal conditions.
(4) The number of automatic fire detectors connected to an initiating device circuit is limited by good engineering practice and the listing of the detectors. If a large number of detectors are connected to an initiating device circuit, locating the detector in alarm or locating a faulty detector becomes difficult and time consuming.

On certain types of detectors, a trouble signal results from faults in the detector. When this occurs where there are large numbers of detectors on an initiating device circuit, locating the faulty detector also becomes difficult and time consuming.

A.6.6 Subsection 6.6.2 requires a trouble indication on the loss of data communications for all styles. Loss of data communications means that a device or subsystem connected to the

Copyright National Fire Protection Association
Provided by IHS under license with NFPA
No reproduction or networking permitted without license from IHS
Not for Resale

signaling line circuit is unable to send or receive information to another device or subsystem connected to the same signaling line circuit. In practical operation this means that a device or subsystem cannot be removed from the signaling line circuit or made completely inoperable without a trouble indication at the system. Also refer to A.6.5.

A.6.8.1.1 Actuation of an initiating device is usually the instant at which a complete digital signal is achieved at the device, such as a contact closure. For smoke detectors or other automatic initiating devices, which can involve signal processing and analysis of the signature of fire phenomena, actuation means the instant when the signal analysis requirements are completed by the device or fire alarm control unit software.

A separate fire alarm control unit contemplates a network of fire alarm control units forming a single large system as defined in Section 6.8.

For some analog initiating devices, actuation is the moment that the fire alarm control unit interprets that the signal from an initiating device has exceeded the alarm threshold programmed into the fire alarm control unit.

For smoke detectors working on a system with alarm verification, where the verification function is performed in the fire alarm control unit, the moment of actuation of smoke detectors is sometimes determined by the fire alarm control unit.

It is not the intent of this paragraph to dictate the time frame for the local fire safety devices to complete their function, such as fan wind-down time, door closure time, or elevator travel time.

A.6.8.1.2 A system provided with an alarm verification feature as permitted by 6.8.5.4.1 is not considered a presignal system, since the delay in the signal produced is 60 seconds or less and requires no human intervention.

A.6.8.1.3.4 The bypass means is intended to enable automatic or manual day, night, and weekend operation.

A.6.8.2 This Code addresses field installations that interconnect two or more listed control units, possibly from different manufacturers, that together fulfill the requirements of this Code.

Such an arrangement should preserve the reliability, adequacy, and integrity of all alarm, supervisory, and trouble signals and interconnecting circuits intended to be in accordance with the provisions of this Code.

Where interconnected control units are in separate buildings, consideration should be given to protecting the interconnecting wiring from electrical and radio frequency interference.

A.6.8.4.1 The provisions of 6.8.4.1 apply to types of equipment used in common for fire alarm systems, such as fire alarm, sprinkler supervisory, or guard's tour service, and for other systems, such as burglar alarm or coded paging systems, and to methods of circuit wiring common to both types of systems. The intent of connecting non-fire systems with the fire alarm system is often to cause the non-fire systems to react appropriately when signaled by the fire alarm system.

A.6.8.4.3 When a non-fire system is combined with the fire alarm system using a data transmission method such as EIA232 serial data, isolation of the interconnect circuitry is essential to proper operation. Methods for isolating the non-fire alarm system may include isolation wiring methods or a barrier to prevent failure of the fire alarm system functions due to transfer of wiring faults between the systems. It is also important to consider the adverse impact on the fire alarm system caused by excessive traffic on the communications link.

A.6.8.4.5 If the building paging system can be controlled by personnel at the fire command center, and if permitted by the authority having jurisdiction, the building paging system can be used as a supplementary notification system to provide selective and all-call fire alarm evacuation voice messages and messages for occupants to relocate to safe areas in a building.

Dedicated fire alarm/voice evacuation alarm systems are not required to monitor the integrity of the speaker circuits while active for emergency purposes.

These circuits must be monitored for integrity while active for nonemergency purposes. The building operator, system designer, and authority having jurisdiction should be aware that in some situations such a system could be subject to deliberate tampering. Tampering is usually attempted to reduce the output of a sound system that is in constant use as a music or paging system and is a source of annoyance to employees. The likelihood of tampering can be reduced through proper consideration of loudspeaker accessibility and system operation. Access can be reduced through the use of hidden or nonadjustable transformer taps (which can reduce playback levels), use of vandal-resistant listed loudspeakers, and placement in areas that are difficult to access, such as high ceilings (any ceiling higher than could be reached by standing on a desk or chair). Nonemergency operation of the system should always consider that an audio system that annoys an employee potentially reduces employee productivity and can also annoy the public in a commercial environment. Most motivations for tampering can be eliminated through appropriate use of the system and employee discipline. Access to amplification equipment and controls should be limited to those in authority to make adjustments to such equipment. It is common practice to install such equipment in a manner that allows adjustment of nonemergency audio signal levels while defaulting to a fixed, preset level of playback when operating in emergency mode. Under extreme circumstances, certain zones of a protected area might require a dedicated emergency voice/alarm communications zone.

A.6.8.4.7 Examples of signal classification are provided in Table A.6.8.4.7. This is not all-inclusive or prescriptive but is meant to illustrate a potential classification scheme. Actual schemes may vary depending upon the response plan and/or requirements of the authority having jurisdiction. Mass notification systems are allowed to take priority over the fire alarm audible notification message or signal. This is intended to allow the mass notification system to prioritize emergency signals on the basis of risk to building occupants. The designer should specify the desired operation, in particular, as to what should occur immediately after the mass notification message has completed.

A.6.8.4.9 When interfacing fire alarm and mass notification functions, the system designer should evaluate the proximity of the individual operating locations (controls/microphone). This requirement applies where mass notification systems are installed in buildings that do not have emergency voice alarm systems (in accordance with 6.9.1); otherwise, the provisions of 6.9.6.7 apply.

A.6.8.4.10 See NFPA 720, *Standard for the Installation of Carbon Monoxide (CO) Warning Equipment in Dwelling Units*, for more information.

A.6.8.4.11 See NFPA 10, *Standard for Portable Fire Extinguishers*, for more information on portable fire extinguishers.

Copyright National Fire Protection Association
Provided by IHS under license with NFPA
No reproduction or networking permitted without license from IHS
Not for Resale

Table A.6.8.4.7 Examples of Signal Classification

Life Safety	Property Protection	Trouble	Other
Fire alarm signals	Security signals	Battery fault	HVAC signals
Holdup alarm signals	Supervisory signals	AC power failure	Occupancy
Code blue signals	Access control	IDC faults	
Panic alarms		NAC faults	
Hazmat signals		SLC faults	
Severe weather warnings			
Flood alarms			
Mass notification signals			

A.6.8.5.1.2 The manual fire alarm box required by 6.8.5.1.2 is intended to provide a means to manually activate the fire alarm system when the automatic fire detection system or waterflow devices are out of service due to maintenance or testing, or where human discovery of the fire precedes automatic sprinkler system or automatic detection system activation. Where the fire alarm system is connected to a monitoring facility, the manual fire alarm box required by 6.8.5.1.2 should be connected to a separate circuit that is not placed "on test" when the detection or sprinkler system is placed "on test." The manual fire alarm box should be located in an area that is accessible to occupants of the building and should not be locked.

A.6.8.5.3.2 Where power is supplied separately to the individual initiating device(s), multiple initiating circuits are not prohibited from being monitored for integrity by a single power supervision device.

A.6.8.5.4.1 The alarm verification feature should not be used as a substitute for proper detector location/applications or regular system maintenance. Alarm verification features are intended to reduce the frequency of false alarms caused by transient conditions. They are not intended to compensate for design errors or lack of maintenance.

A.6.8.5.5 This Code does not specifically require a waterflow alarm-initiating device to be connected to the building fire alarm system. Connection to the building fire alarm system would be determined by the requirements established by the authority having jurisdiction. See A.1.2.4.

A.6.8.5.5.2 Circuits connected to a signaling line circuit interface are initiating device circuits and are subject to these limitations.

A.6.8.5.6 This Code does not specifically require supervisory signal-initiating devices to be connected to the building fire alarm system. Connections to the building fire alarm system would be determined by the requirements established by the authority having jurisdiction. See A.1.2.4. Some systems utilize non-electrical methods to supervise conditions of the system such as chains on sprinkler control valves.

Supervisory signals are not intended to provide indication of design, installation, or functional defects in the supervised systems or system components and are not a substitute for regular testing of those systems in accordance with the applicable standard. Supervised conditions should include, but not be limited to, the following:

(1) Control valves 38.1 mm (1½ in.) or larger
(2) Pressure, including dry-pipe system air, pressure tank air, preaction system supervisory air, steam for flooding systems, and public water
(3) Water tanks, including water level and temperature
(4) Building temperature, including areas such as valve closet and fire pump house
(5) Electric fire pumps, including running (alarm or supervisory), power failure, and phase reversal
(6) Engine-driven fire pumps, including running (alarm or supervisory), failure to start, controller off "automatic," and trouble (e.g., low oil, high temperature, overspeed)
(7) Steam turbine fire pumps, including running (alarm or supervisory), steam pressure, and steam control valves

A.6.8.5.6.2 Circuits connected to a signaling line circuit interface are initiating device circuits and are subject to these limitations.

A.6.8.5.8 See A.6.8.5.6.

A.6.8.6.2 The general purpose of the fire alarm audible and visual notification appliances is to alert occupants that there is a fire condition and for occupants to exit from the building. Once the occupants are in the exit enclosures, high noise levels and light intensity from notification appliances may cause confusion and impede egress. There may be conditions that warrant the installation of notification appliances in exit enclosures, but careful analysis is necessary to avoid impeding exiting from the building.

A.6.8.6.5.1 Paragraph 4.4.3.6 requires that fire alarm signals be distinctive in sound from other signals and that this sound not be used for any other purpose. The use of the distinctive three-pulse temporal pattern fire alarm evacuation signal required by 6.8.6.5.1 became effective July 1, 1996, for new systems installed after that date. It is not the intent that the ANSI S3.41 requirements for sound pressure levels or the distinct pattern for visible appliances be applied in *NFPA 72*. It had been previously recommended for this purpose by this Code since 1979. It has since been adopted as both an American National Standard (ANSI S3.41, *American National Standard Audible Emergency Evacuation Signal*) and an International Standard (ISO 8201, *Audible Emergency Evacuation Signal*).

Copies of both of these standards are available from either of the following:

(1) The web at asa.aip.org/map_standards.html
(2) Standards Publication Fulfillment, P.O. Box 1020, Sewickly, PA 15143-9998, Tel. 412-741-1979

For information about the Acoustical Society of America, or for how and why the three-pulse temporal pattern signal was chosen as the international standard evacuation signal, contact Standards Secretariat, Acoustical Society of America, 120 Wall Street, New York, NY 10005-3993. Tel. 212-248-0373.

The standard fire alarm evacuation signal is a three-pulse temporal pattern using any appropriate sound. The pattern consists of the following in this order:

(1) An on phase lasting 0.5 seconds ±10 percent.
(2) An off phase lasting 0.5 seconds ±10 percent, for three successive on periods.

Copyright National Fire Protection Association
Provided by IHS under license with NFPA
No reproduction or networking permitted without license from IHS
Not for Resale

(3) An off phase lasting 1.5 seconds ±10 percent *[see Figure A.6.8.6.5.1(a) and Figure A.6.8.6.5.1(b)]*. The signal should be repeated for a period that is appropriate for the purposes of evacuation of the building, but for not less than 180 seconds. A single-stroke bell or chime sounded at "on" intervals lasting 1 second ±10 percent, with a 2-second ±10 percent "off" interval after each third "on" stroke, is permitted *[see Figure A.6.8.6.5.1(c)]*.

The minimum repetition time is permitted to be manually interrupted.

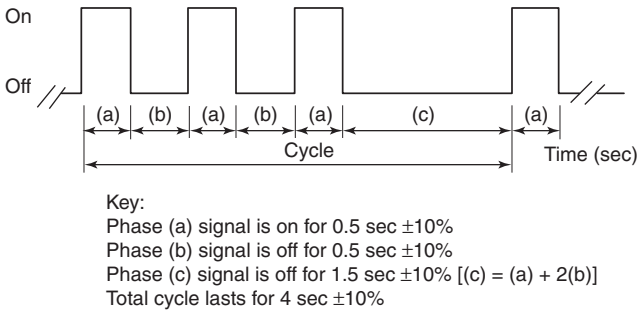

FIGURE A.6.8.6.5.1(a) Temporal Pattern Parameters.

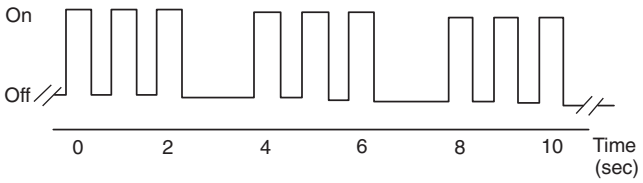

FIGURE A.6.8.6.5.1(b) Temporal Pattern Imposed on Audible Notification Appliances That Otherwise Emit a Continuous Signal While Energized.

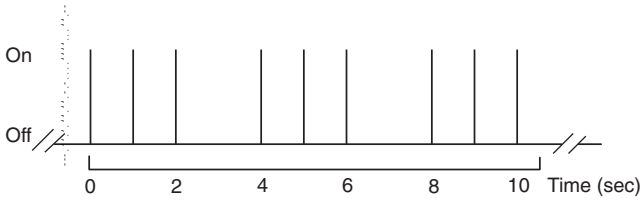

FIGURE A.6.8.6.5.1(c) Temporal Pattern Imposed on a Single-Stroke Bell or Chime.

A.6.8.6.5.3 Coordination or synchronization of the audible signal within a notification zone is needed to preserve the temporal pattern. It is unlikely that the audible signal in one evacuation/notification zone will be heard in another at a level that will destroy the temporal pattern. Thus, it would not normally be necessary to provide coordination/synchronization for an entire system. Caution should be used in spaces such as atriums where the sounds produced in one notification zone can be sufficient to cause confusion regarding the temporal pattern.

A.6.9 Recorded voice messages for fire alarm systems (where used) should be prepared in accordance with this Code by persons who are experienced with the operation of building fire alarm systems and are knowledgeable of the building's construction, layout, and fire protection plan, including evacuation procedures. The proposed voice messages should be approved by the authority having jurisdiction prior to being implemented. Persons who record the messages for fire alarm systems should be able to read and speak the language used for the message clearly, concisely, and without an accent that would have an adverse effect on intelligibility.

A.6.9.1 It is not the intention that emergency voice/alarm communications service be limited to English-speaking populations. Emergency messages should be provided in the language of the predominant building population. If there is a possibility of isolated groups that do not speak the predominant language, multilingual messages should be provided. It is expected that small groups of transients unfamiliar with the predominant language will be picked up in the traffic flow in the event of an emergency and are not likely to be in an isolated situation.

A.6.9.6.1 The choice of the location(s) for the emergency voice/alarm communications control equipment should also take into consideration the ability of the fire alarm system to operate and function during any probable single event. Although *NFPA 72* does not regulate either building construction or contents, system designers should consider the potential for fire in proximity to fire alarm control equipment, including remotely located control devices, to disable the system or a portion thereof. Where practical, it is prudent to minimize unnecessary fire exposures of fire alarm control equipment through the use of fire-rated construction or enclosures, limiting adjacent combustibles and ignition sources or other appropriate means.

A.6.9.7 Speakers located in the vicinity of the emergency voice/alarm communications control equipment should be arranged so they do not cause audio feedback when the system microphone is used. Speakers installed in the area of two-way telephone stations should be arranged so that the sound pressure level emitted does not preclude the effective use of the two-way telephone system. Circuits for speakers and telephones should be separated, shielded, or otherwise arranged to prevent audio cross-talk between circuits.

A.6.9.10 When a fire or other emergency occurs in a building, the usual goal is to evacuate the occupants or relocate them so that they are not exposed to hazardous conditions. The exception occurs in occupancies using SIP/DIP [1] (Stay In Place, Defend In Place) strategies. It may also be necessary to alert and provide information to trained staff responsible for assisting evacuation or relocation. Figure A.6.9.10 shows several key steps in a person's reaction and decision-making process [2].

Occupants rarely panic in fire situations [3,4]. The behavior that they adopt is based on the information they have, the perceived threat and the decisions they make. The entire decision path is full of thought and decisions on the part of the occupant. All of which take time before leading to the development of adaptive behavior. In hindsight, the actions of many occupants in real fires are sometimes less than optimal. However, their decisions may have been the best choices given the information they had.

Fire alarm systems that only use audible tones and/or flashing strobe lights impart only one bit of information: Fire Alarm. It has long been recognized that environments having complex egress situations or high hazard potentials require occupant notification systems that provide more than one bit of information [5]. To reduce the response time of the occupants and to effect the desired behavior, the message should contain several key elements [3,6]. These include:

Copyright National Fire Protection Association
Provided by IHS under license with NFPA
No reproduction or networking permitted without license from IHS
Not for Resale

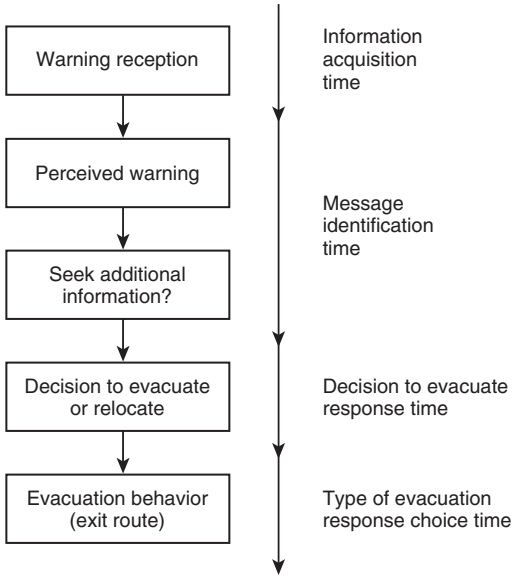

FIGURE A.6.9.10 Key Steps in a Person's Reaction.

- Tell them what has happened and where.
- Tell them what they should do.
- Tell them why they should do it.

There does not seem to be any research that has tested actual message content to determine the best way to inform occupants. The problem is that each building and each fire is unique. Messaging is further complicated by the need to give different information to different people depending on their location relative to the fire, their training, and their physical/mental capabilities.

Messages should use positive language and avoid negative instructions that could be misinterpreted due to unintelligible communications. For example, if you want people to leave an area, say so: "A fire has been reported in the area. For your safety, use the stairs to evacuate the area immediately." A bad example is: "The signal tone you have just heard indicated a report of an emergency. If your floor evacuation signal sounds after this message, do not use the elevator, walk to the nearest stairway and leave the floor. While the report is being verified, occupants on other floors should await further instructions." This message is too long, ambiguous, and subject to misunderstanding if not heard clearly. The word "not" may not be heard clearly, or it may be heard to apply to all of the remaining sentence. Similarly, care should be used in selecting and clearly enunciating words such as *fifth* and *sixth*, which can sound the same if the system and environment lead to low intelligibility. Content of the message should be predicated on the building fire safety plan, the nature of the building and its occupants, the design of the fire alarm system, and testing of the occupant reaction to the message. Caution is advised that the fire alarm system operation and message actuation might be initiated by a manual pull station or detector remote from the fire.

[1] Schifiliti, R.P., "To Leave or Not to Leave — That is the Question!", National Fire Protection Association, World Fire Safety Congress & Exposition, May 16, 2000, Denver, CO.

[2] Ramachandran, G., "Informative Fire Warning Systems," *Fire Technology*, Volume 47, Number 1, February 1991, National Fire Protection Association, 66-81.

[3] J. Bryan, "Psychological Variables That May Affect Fire Alarm Design," *Fire Protection Engineering*, Society of Fire Protection Engineers, Issue No. 11, Fall 2001.

[4] Proulx, G., "Cool Under Fire," *Fire Protection Engineering*, Society of Fire Protection Engineers, Issue No. 16, Fall 2002.

[5] General Services Administration, Proceedings of the Reconvened International Conference on Fire Safety in High Rise Buildings, Washington, D.C., October 1971.

[6] Proulx, G., "Strategies for Ensuring Appropriate Occupant Response to Fire Alarm Signals," National Research Council of Canada, Ottawa, Ontario, *Construction Technology Update*, No. 43, 1–6, December 2000.

A.6.9.10.4.1 One or more of the following means might be considered acceptable to provide a level of survivability consistent with the intent of this requirement:

(1) Installing a fire alarm system in a fully sprinklered building in accordance with NFPA 13, *Standard for the Installation of Sprinkler Systems*
(2) Routing notification appliance circuits separately
(3) Using short-circuit fault-tolerant signaling line circuits for controlling evacuation signals

The requirement for notification appliances to operate in those evacuation signaling zones that are not attacked by fire will also require that circuits and equipment that are common to more than one evacuation signaling zone be designed and installed such that the fire will not disable them. For instance, a signaling line circuit used to control notification appliances in multiple evacuation signaling zones should be properly designed and installed so that one fire would not impair the signaling line circuit, rendering the notification appliances serving more than one evacuation signaling zone inoperative. Power supply requirements of Chapter 4 apply to these systems. The secondary power supply requirements of that chapter meet the intent of these survivability requirements.

A.6.9.10.4.2(4) Paragraph 6.9.10.4.2 requires the protection of circuits as they pass through fire areas other than the one served. The purpose of this is to delay possible damage to the circuits from fires in areas other than those served by the circuits and to increase the likelihood that circuits serving areas remote from the original fire will have the opportunity to be actuated and serve their purpose. Note that the protection requirement would also apply to a signaling line circuit that extends from a master fire alarm control unit to another remote fire alarm control unit where notification appliance circuits might originate.

A.6.9.11.1 Paragraph 6.9.11.1 does not prohibit the provision of multiple notification appliance circuits within an evacuation zone.

A.6.10.1.6 Consideration should be given to the type of telephone handset that fire fighters use in areas where high ambient noise levels exist or areas where high noise levels could exist during a fire condition. Push-to-talk handsets, handsets that contain directional microphones, or handsets that contain other suitable noise-canceling features can be used.

A.6.10.1.16 One or more of the following means might be considered acceptable to provide a level of survivability consistent with the intent of this requirement:

(1) Routing two-way telephone circuits separately
(2) Using short-circuit fault tolerant circuits

Copyright National Fire Protection Association
Provided by IHS under license with NFPA
No reproduction or networking permitted without license from IHS
Not for Resale

A.6.10.2 Monitoring of the in-building two-way communications system by the fire control system is permissible. The following should be considered as part of the system design and monitoring criteria:

Monitoring (if provided):

(1) Primary operating power
(2) Secondary operating power
(3) Antenna connections
(4) Antenna integrity
(5) Signal strength
(6) Multi pathing
(7) Interference
(8) Channel integrity
(9) Interconnecting wiring

Design:

(1) Survivability
(2) FCC licensing
(3) Interior and external building reception
(4) Testing and maintenance by licensing group
(5) Environmental conditions
(6) Future systems expansion

A.6.11.2 Embossed plastic tape, pencil, ink, or crayon should not be considered to be a permanently attached placard.

A.6.12.7 Automatic fire suppression systems referred to in 6.12.7 include, but are not limited to, preaction and deluge sprinkler systems, carbon dioxide systems, Halon systems, and dry chemical systems.

A.6.16.2.2 Control devices (fire alarm relays) can be located at a motor control center that is located floors away from the device to be activated, such as air-handling units and exhaust fans located on the roof. The requirement for monitoring for integrity only applies to the installation wiring between the fire alarm control unit and the auxiliary fire alarm relay. It does not apply to the wiring between the auxiliary fire alarm relay and the emergency control device (for example, motor stop/start control relay) or between the emergency control device and the equipment to be controlled (for example, air-handling units and exhaust fans). For example, although the auxiliary fire alarm relay is required be located within 915 mm (36 in.) of the emergency control device, there is no limit specified for the distance between the emergency control device and the equipment to be controlled.

A.6.16.3.2 In facilities without a building alarm system, dedicated function fire alarm control units are required by 6.16.3.2 for elevator recall in order that the elevator recall systems be monitored for integrity and have primary and secondary power meeting the requirements of this Code.

The fire alarm control unit used for this purpose should be located in an area that is normally occupied and should have audible and visible indicators to annunciate supervisory (elevator recall) and trouble conditions; however, no form of general occupant notification or evacuation signal is required or intended by 6.16.3.2.

A.6.16.3.5 Smoke detectors should not be installed in outdoor locations or locations that are open to the weather (such as unenclosed elevator lobbies in open parking structures), because such environments can exceed the parameters of the detector listing and can result in unwanted alarms. See 6.16.3.7.

A.6.16.3.7 The objective of Phase I Emergency Recall Operation is to have the elevator automatically return to the recall level before fire can effect the safe operation of the elevator. This includes both the safe mechanical operation of the elevator as well as the delivery of passengers to a safe lobby location. Where ASME A17.1, *Safety Code for Elevators and Escalators*, specifies the use of smoke detectors, these devices are expected to provide the earliest response to situations that would require Phase I Emergency Recall Operations. The use of other automatic fire detection is only intended where smoke detection would not be appropriate due to the environment. Where ambient conditions prohibit the installation of smoke detectors, the selection and location of other automatic fire detection should be evaluated to ensure the best response is achieved. When heat detectors are used, consideration should be given to both detector temperature and time lag characteristics. The consideration of a low temperature rating alone might not provide the earliest response.

A.6.16.3.12 It is recommended that the installation be in accordance with Figure A.6.16.3.12(a) and Figure A.6.16.3.12(b). Figure A.6.16.3.12(a) should be used where the elevator is installed at the same time as the building fire alarm system. Figure A.6.16.3.12(b) should be used where the elevator is installed after the building fire alarm system.

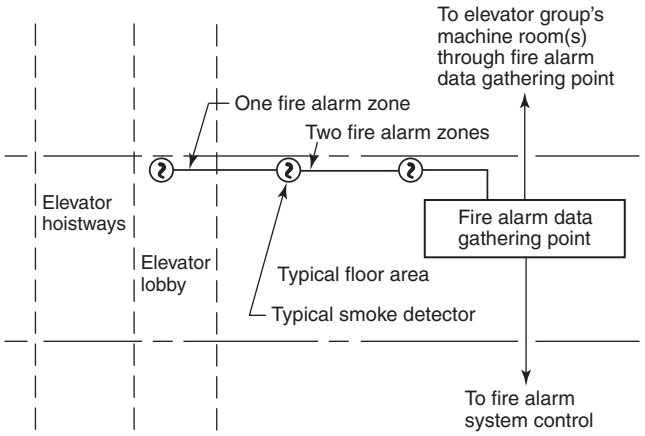

FIGURE A.6.16.3.12(a) Elevator Zone — Elevator and Fire Alarm System Installed at Same Time.

A.6.16.3.12.2(3) Where initiating devices are located in the elevator hoistway at or below the lowest level of recall, ASME A17.1, *Safety Code for Elevators and Escalators*, requires that the elevator be sent to the upper recall level. Note that the lowest level of recall could be the "designated level" or "alternate level" as determined by the local authority for the particular installation. Also note that the elevator hoistway, as defined in ASME A.17.1, includes the elevator pit.

Where heat detectors are installed in elevator pits to recall elevators, they should be, whenever practicable, installed in accordance with Chapter 5. In situations that preclude installation of heat detectors in accordance with Chapter 5, detectors should be installed using best judgment so that the detector will stand the best chance of earliest detection of fire and also be readily available for testing and servicing.

A.6.16.3.12.3 ASME A17.1, *Safety Code for Elevators and Escalators*, requires differentiation between separate hoistways that share a common elevator machine room. For instance, in a situation where there is more than one single hoistway sharing the same elevator machine room, a separate signal must be derived from each hoistway.

Copyright National Fire Protection Association
Provided by IHS under license with NFPA
No reproduction or networking permitted without license from IHS
Not for Resale

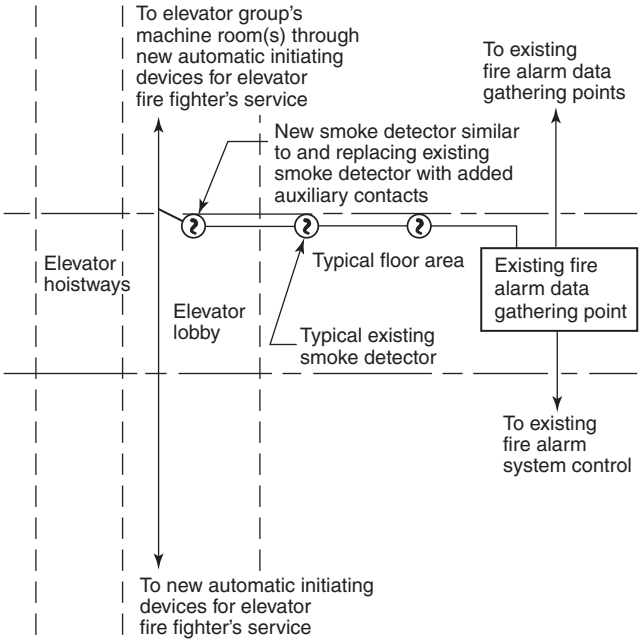

FIGURE A.6.16.3.12(b) Elevator Zone — Elevator Installed After Fire Alarm System.

A.6.16.4.1 When determining desired performance, consideration should be given to the temperature and time lag characteristics of both the sprinkler head and the heat detector to ensure as much as possible that the heat detector will operate prior to the sprinkler head, because a lower temperature rating alone might not provide earlier response. The listed spacing rating of the heat detector should be 7.6 m (25 ft) or greater.

A.6.16.4.3 Care should be taken to ensure that elevator power cannot be interrupted due to water pressure surges in the sprinkler system. The intent of the Code is to ensure that the switch and the system as a whole do not have the capability of introducing a time delay into the sequence. The use of a switch with a time delay mechanism set to zero does not meet the intent of the Code, because it is possible to introduce a time delay after the system has been accepted. This might occur in response to unwanted alarms caused by surges or water movement, rather than addressing the underlying cause of the surges or water movement (often due to air in the piping). Permanently disabling the delay in accordance with the manufacturer's printed instructions should be considered acceptable. Systems that have software that can introduce a delay in the sequence should be programmed to require a security password to make such a change.

A.6.16.4.4 Upon activation of the heat detector used for elevator power shutdown, there should be a delay in the activation of the power shunt trip. This delay should be the time that it takes the elevator cab to travel from the top of the hoistway to the lowest recall level. Figure A.6.16.4.4 illustrates one method of monitoring elevator shunt trip control power for integrity.

A.6.16.5.2 See A.6.16.5.3.

A.6.16.5.3 This standard does not specifically require detection devices used to cause the operation of HVAC system smoke dampers, fire dampers, fan control, smoke doors, and fire doors to be connected to the fire alarm system.

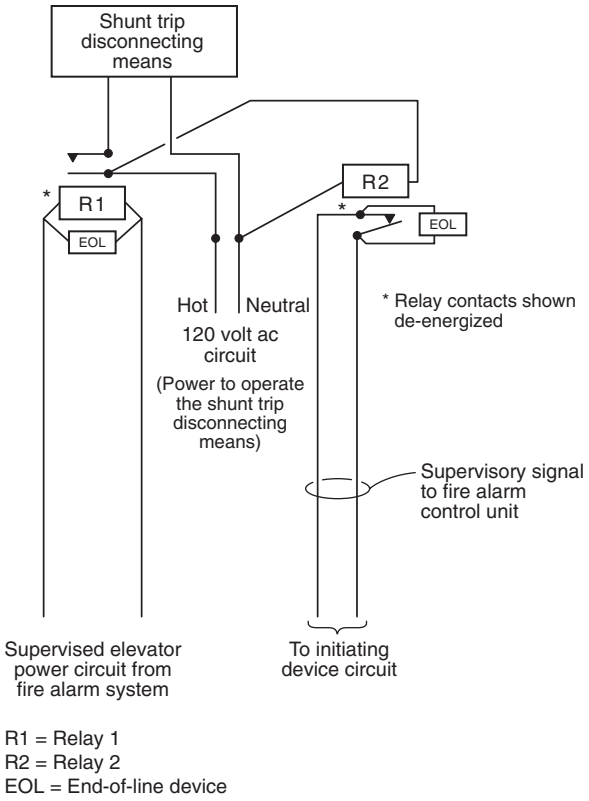

FIGURE A.6.16.4.4 Typical Method of Providing Elevator Power Shunt Trip Supervisory Signal.

Connection to the fire alarm system would be determined by the requirements established by the authority having jurisdiction. See A.1.2.4.

A.6.16.7.3 A problem could exist when batteries are used as a secondary power source if a fire alarm control unit having 24 hours of standby operating power were to lose primary power and be operated for more than 24 hours from the secondary power source (batteries). It is possible that sufficient voltage would be available to keep the doors locked but not enough voltage would be available to operate the fire alarm control unit to release the locks.

A.6.16.8 When a fire alarm evacuation signal activates, the exit marking system will be activated. In some cases, the activation may be sequenced to meet the fire safety plan of the property.

A.6.17 The term *wireless* has been replaced with the term *low-power radio* to eliminate potential confusion with other transmission media such as optical fiber cables.

Low-power radio devices are required to comply with the applicable *low-power* requirements of Title 47, Code of Federal Regulations, Part 15.

A.6.17.1 Equipment listed solely for dwelling unit use would not comply with this requirement.

A.6.17.3.1 This requirement is not intended to preclude verification and local test intervals prior to alarm transmission.

A.7.1 Notification appliances should be sufficient in quantity, audibility, intelligibility, and visibility so as to reliably convey

--`,,```,,,,````-`-`,,`,,`,`,,`---
Copyright National Fire Protection Association
Provided by IHS under license with NFPA
No reproduction or networking permitted without license from IHS
Not for Resale

the intended information to the intended personnel during an emergency.

Notification appliances in conventional commercial and industrial applications should be installed in accordance with the specific requirements of Section 7.4 and Section 7.5.

The Code recognizes that it is not possible to identify specific criteria sufficient to ensure effective occupant notification in every conceivable application. If the specific criteria of Section 7.4 and Section 7.5 are determined to be inadequate or inappropriate to provide the performance recommended, approved alternative approaches or methods are permitted to be used.

A.7.1.5 Chapter 7 establishes the means, methods, and performance requirements of notification appliances and systems. Chapter 7 does not require the installation of notification appliances or identify where notification signaling is required. Authorities having jurisdiction, other codes, other standards, and chapters of this Code require notification signaling and might specify areas or intended audiences.

For example, Chapter 4 requires audible and visible trouble signals at specific locations. A building or fire code might require audible and visible occupant notification throughout all occupiable areas. In contrast, a building or fire code might require complete coverage with audible signaling, but might only require specific areas or spaces to have visible signaling. It is also possible that a referring code or standard might require compliance with mounting and notification appliance performance requirements without requiring complete notification signaling system performance. An example might be where an appliance is specifically located to provide information or notification to a person at a specific desk within a larger room.

A.7.3.3.2 The intent is to prohibit labeling that could give an incorrect message. Wording such as "Emergency" would be acceptable for labeling because it is generic enough not to cause confusion. Fire alarm systems are often used as emergency notification systems, and therefore attention should be given to this detail.

Combination audible and visible units may have several visible appliances, each labeled differently or not labeled at all.

A.7.3.4 Situations exist where supplemental enclosures are necessary to protect the physical integrity of a notification appliance. Protective enclosures should not interfere with the performance characteristics of the appliance. If the enclosure degrades the performance, methods should be detailed in the manufacturer's published instructions of the enclosure that clearly identify the degradation. For example, where the appliance signal is attenuated, it might be necessary to adjust the appliance spacings or appliance output.

A.7.3.6 For hardwired appliances, terminals or leads, as described in 7.3.6, are necessary to ensure that the wire run is broken and that the individual connections are made to the leads or other terminals for signaling and power.

A common terminal can be used for connection of incoming and outgoing wires. However, the design and construction of the terminal should not permit an uninsulated section of a single conductor to be looped around the terminal and to serve as two separate connections. For example, a notched clamping plate under a single securing screw is acceptable only if separate conductors of a notification circuit are intended to be inserted in each notch. *[See Figure A.5.4.7(a).]*

Another means to monitor the integrity of a connection is to establish communication between the appliance and the fire alarm control unit. The integrity of the connection is verified by the presence of communication. Monitoring integrity in this fashion may not require multiple terminals or leads as previously described.

It should be noted that monitoring the integrity of the installation conductors and their connection to an appliance does not guarantee the integrity of the appliance or that it is operational. Appliances can be damaged and become inoperable or a circuit can be overloaded, resulting in failure when the appliances are called upon to work. Presently, only testing can establish the integrity of an appliance.

A.7.4.1.1 The Code does not require that all audible notification appliances within a building be of the same type. However, a mixture of different types of audible notification appliances within a space is not the desired method. Audible notification appliances that convey a similar audible signal are preferred. For example, a space that uses mechanical horns and bells might not be desirable. A space that is provided with mechanical horns and electronic horns with similar audible signal output is preferred.

However, the cost of replacing all existing appliances to match new appliances can impose substantial economic impact where other methods can be used to avoid occupant confusion of signals and signal content. Examples of other methods used to avoid confusion include, but are not limited to, training of occupants, signage, consistent use of temporal code signal pattern, and fire drills.

Hearing protection can attenuate both the ambient noise level and the audible fire alarm signal. Specifications from hearing protection manufacturers might allow the effect of hearing protection devices to be evaluated. In spaces where hearing protection is worn due to high ambient noise conditions, visible signal appliances should be considered.

In addition, where hearing protection is worn due to high ambient noise conditions, the audible fire alarm signal and ambient noise measurements can be analyzed and the audible fire alarm signal can be adjusted to account for attenuation caused by the hearing protection devices.

A.7.4.1.2 The maximum sound pressure level permitted in a space is 110 dBA, reduced from 120 dBA in previous editions. The change from 120 dBA to 110 dBA is to coordinate with other laws, codes, and standards.

In addition to the danger of exposure to a high sound level, long-term exposure to lower levels may also be a problem when, for example, occupants must traverse long egress paths to exit or technicians test large systems over extended time periods.

This Code does not presume to know how long a person will be exposed to an audible notification system. The limit of 110 dBA has been set as a reasonable upper limit for the performance of a system. For workers who may be exposed to high sound levels over the course of a 40-year employment history, OSHA (Occupational, Health and Safety Administration) has established a maximum permitted dose before a hearing conservation program must be implemented. A worker exposed to 120 dBA for 7.5 minutes a day for 40 years might be in danger of suffering a hearing impairment. The OSHA regulation includes a formula to calculate a dose for situations where a person is exposed to different sound levels for different periods of time. The maximum permitted by the regulation is an 8-hour equivalent dose of 90 dBA. It is possible to calculate the dose a person experiences when traversing an egress path where the sound pressure level varies as they pass close to, then away from, audible appliances. Table A.7.4.1.2 depicts OSHA permissible noise exposures.

Copyright National Fire Protection Association
Provided by IHS under license with NFPA
No reproduction or networking permitted without license from IHS
Not for Resale

Table A.7.4.1.2 Permissible Noise Exposures

Duration (hours)	L_A (dBA)
8	90
6	92
4	95
3	97
2	100
1.5	102
1	105
0.5	110
0.25	115
0.125 (7.5 minutes)	120

Source: OSHA, 29 CFR 1910.5, Table G-16, Occupational Noise Exposure.

A.7.4.1.3 In determining maximum ambient sound levels, sound sources that should be considered include air-handling equipment and background music in a typical office environment, office cleaning equipment (vacuum cleaner), noisy children in a school auditorium, car engines in an auto shop, conveyor belts in a warehouse, and a running shower and fan in a hotel bathroom. Temporary or abnormal sound sources that can be excluded would include internal or external construction activities (i.e., office rearrangements and construction equipment).

A.7.4.1.4 Voice intelligibility should be measured in accordance with the guidelines in Annex A of IEC 60849, *Sound Systems for Emergency Purposes*. When tested in accordance with Annex B, Clause B1, of IEC 60849, the system should exceed the equivalent of a common intelligibility scale (CIS) score of 0.70. Intelligibility is achieved when the quantity $I_{av-\sigma}$, as specified in B3 of IEC 60849, exceeds this value. I_{av} is the arithmetical average of the measured intelligibility values on the CIS, and σ (sigma) is the standard deviation of the results.

Objective means of determining intelligibility are found in Part 16 of IEC 60268, *The Objective Rating of Speech Intelligibility by Speech Transmission Index*. Subject-based techniques for measuring intelligibility are defined by ANSI S3.2, *Method for Measuring the Intelligibility of Speech Over Communications Systems*. ANSI S3.2 should be considered an acceptable alternative to ISO TR 4870, where referenced in IEC 60268, Part 16.

The designer of an intelligible voice/alarm system should possess skills sufficient to properly design a voice/alarm system for the occupancy to be protected. System designs for many smaller occupancies can be accomplished satisfactorily, if not optimally, on the basis of experience with the performance of other systems in similar spaces. For existing construction, relatively simple acoustic measurements combined with knowledge of the chosen loudspeaker's performance characteristics can frequently result in satisfactory performance using mathematical formulas developed for the purpose.

For occupancies that do not yet exist, the designer should have an understanding of the acoustic characteristics of the architectural design, as well as the acoustic performance properties of available loudspeakers. Architecturally, this includes the physical size and shape of the space, as well as the acoustic properties of the walls, floors, ceilings, and interior furnishings. A proper design analysis can sometimes reveal that an intelligible system is not achievable unless some features of the architectural design are changed. The designer should be prepared to defend such conclusions and, if necessary, refuse to certify the installation of such a system. While "hand calculations" and experience work well for simpler installations, more complex designs are frequently better and more cost-effectively analyzed using one of a number of readily available computer-based design programs.

The designer and the authority having jurisdiction should both be aware that the acoustic performance parameters of the chosen loudspeakers, as well as their placement in the structure, play a major role in determining how many devices are necessary for adequate intelligibility. The numerical count of devices for a given design and protected space cannot, by itself, be used to determine the adequacy of the design. Sometimes, the acoustic problems of certain placement constraints can be satisfactorily overcome through the careful selection of loudspeakers with the requisite performance characteristics, rather than by increasing their number.

There might be applications where not all spaces will require intelligible voice signaling. For example, in a residential occupancy such as an apartment, the authority having jurisdiction and the designer might agree to a system that achieves the required audibility throughout but does not result in intelligible voice signaling in the bedrooms. The system would be sufficient to awaken and alert. However, intelligibility might not be achieved in the bedrooms with the doors closed and the sounder in the adjacent hallway or room. In some cases this can require that messages repeat a sufficient number of times to ensure that occupants can reach a location where the system is sufficiently intelligible to be understood. Systems that use tone signaling in some areas and voice signaling in other areas would not require voice intelligibility in those areas only covered by the tone.

A.7.4.1.6 Because voice is composed of modulated tones, it is not valid to compare loudness measurements of tone signals with loudness measurements of voice signals. A voice signal that is subjectively judged to be equally as loud as a tone signal will actually produce a dB reading below that of the tone signal. The modulated tones of a voice signal may have the same or greater peak amplitude as that of a tone signal. However, because they are modulated meters with fast or slow time, constants will show a lower dB or dBA reading.

A voice signal must have sufficient audibility to result in intelligible communication. Intelligibility modeling/measurements (subject based and instrument based) include audibility as well as many other factors when determining whether a voice signal is adequate or not adequate.

Where a voice signal includes an audible alert or evacuation tone, the tone portion of the signal should meet the audible signal requirements listed in 7.4.2.

A.7.4.2 The typical average ambient sound level for the occupancies specified in Table A.7.4.2 are intended only for design guidance purposes. The typical average ambient sound levels specified should not be used in lieu of actual sound level measurements.

A.7.4.2.1 Audio levels are commonly measured using units of decibels, or 1/10 Bell, abbreviated dB. When measured using a sound level meter, the operator can select either an A-weighted, B-weighted, or C-weighted measurement. The C-weighted measurement is nominally flat from 70 Hz to 4000 Hz, and the B-weighted measurement is nominally flat from 300 Hz to 4000 Hz. The A-weighted measurement filters the input signal to reduce the measurement sensitivity for frequencies to which the human ear is less sensitive and is relatively flat from 600 Hz to 7000 Hz. This results in a

Copyright National Fire Protection Association
Provided by IHS under license with NFPA
No reproduction or networking permitted without license from IHS
Not for Resale

Table A.7.4.2 Average Ambient Sound Level According to Location

Location	Average Ambient Sound Level (dBA)
Business occupancies	55
Educational occupancies	45
Industrial occupancies	80
Institutional occupancies	50
Mercantile occupancies	40
Mechanical rooms	85
Piers and water-surrounded structures	40
Places of assembly	55
Residential occupancies	35
Storage occupancies	30
Thoroughfares, high-density urban	70
Thoroughfares, medium-density urban	55
Thoroughfares, rural and suburban	40
Tower occupancies	35
Underground structures and windowless buildings	40
Vehicles and vessels	50

measurement that is weighted to simulate the segment of the audio spectrum that provides the most significant intelligibility components heard by the human ear. The units used for measurement are still dB, but the shorthand for specifying use of the A-weighted filter is typically dBA. The difference between any two sound levels measured on the same scale is always expressed in units of dB, not dBA.

The constantly changing nature of pressure waves, which are detected by ear, can be measured by electronic sound meters, and the resulting electronic waveforms can be processed and presented in a number of meaningful ways. Most simple sound level meters have a fast or slow time constant (125 ms and 1000 ms, respectively) to quickly average a sound signal and present a root mean square (RMS) level to the meter movement or display. This is the type of measurement used to determine "the maximum sound level having a duration of at least 60 seconds." Note that Chapter 10 requires this measurement to be made using the FAST time setting on the meter. However, this quick average of impressed sound results in fast movements of the meter's output that are best seen when talking into the microphone; the meter quickly rises and falls with speech. However, when surveying the ambient sound levels to establish the increased level at which a notification appliance will properly function, the sound source needs to be averaged over a longer period of times. See 3.3.18, Average Ambient Sound Level. Moderately priced sound level meters have such a function, usually called L_{eq} or "equivalent sound level." For example, an L_{eq} of speech in a quiet room would cause the meter movement to rise gradually to a peak reading and slowly fall well after the speech is over. L_{eq} measurements are made over a specified time period and reported as $L_{eq,t}$, where t is the time period. For example, a measurement taken over 24 hours is reported as L_{eq24}.

L_{eq} readings can be misapplied in situations where the background ambient noises vary greatly during a 24-hour period. L_{eq} measurements should be taken over the period of occupancy. This is clarified by the definition of Average Ambient Sound Level, 3.3.18. Note that average in this context is the integrated average at a particular measurement location, not the average of several readings taken at different locations. For example, it would be incorrect to take a reading in a quiet bathroom and average it with a reading taken near a noisy machine to get an average to use for the alarm signal design. The alarm would probably be excessively loud in the quiet bathroom and not loud enough near the noisy machine.

In areas where the background noise is generated by machinery and is fairly constant, a frequency analysis can be warranted. It might be found that the high sound levels are predominantly in one or two frequency bandwidths — often lower frequencies. Fire alarm notification appliances producing sound in one or two other frequency bandwidths can adequately penetrate the background noise and provide notification. The system would still be designed to produce or have a sound level at the particular frequency or frequency bandwidth of at least 15 dB above the average ambient sound level or 5 dB above the maximum sound level having a duration of at least 60 seconds, whichever is greater.

In very high noise areas, such as theaters, dance halls, nightclubs, and machine shops, sound levels during occupied times can be 100 dBA and higher. Peak sounds might be 110 dBA or greater. At other occupied times, the sound level might be below 50 dBA. A system designed to have a sound level of at least 15 dB above the average ambient sound level or 5 dB above the maximum sound level having a duration of at least 60 seconds might result in a required fire alarm level in excess of the maximum of 115 dBA. A viable option is to reduce or eliminate the background noise. Professional theaters or other entertainment venues can have road show connection control units *(see NFPA 70, National Electrical Code, Section 520.50)* for troupes to connect their light and sound systems to. These power sources can be controlled by the fire alarm system. In less formal applications, such as many nightclubs, designated power circuits could be controlled. Diligence needs to be exercised to ensure that the controlled circuits are used.

Also, in occupancies such as machine shops or other production facilities, care must be exercised in the design to ensure that the removal of power to the noise source does not create some other hazard. As with other fire safety functions, control circuits and relays would be monitored for integrity in accordance with Chapter 4 and Chapter 6.

Appropriate audible signaling in high ambient noise areas is often difficult. Areas such as automotive assembly areas, machining areas, paint spray areas, and so on, where the ambient noise is caused by the manufacturing process itself, require special consideration. Adding additional audible notification appliances that merely contribute to the already noisy environment might not be appropriate. Other alerting techniques such as visible notification appliances, for example, could be more effectively used.

Other codes, standards, laws or regulations, and the authority having jurisdiction determine where a signal must be audible. This Code section describes the performance requirement needed for a signal to be considered reliably audible.

A.7.4.3.1 See A.7.4.2.1 for additional information on sound measurements and weighting scales.

A.7.4.3.2 For example, in critical care patient areas, it is often desirable to not have an audible fire alarm even at reduced private mode levels. Each case requires consideration by the governing authority. Another example would be high noise

Copyright National Fire Protection Association
Provided by IHS under license with NFPA
No reproduction or networking permitted without license from IHS
Not for Resale

work areas where an audible signal needed to overcome background noise at one time of day would be excessively loud and potentially dangerous at another time of lower ambient noise. A sudden increase of more than 30 dB over 0.5 seconds is considered to cause sudden and potentially dangerous fright.

A.7.4.4.1 See A.7.4.2.1 for additional information on sound measurements and weighting scales.

A.7.4.5 This subsection permits a more rigorous analysis and design for audible signaling. Acoustic design practice and psychoacoustic research have long recognized that for a signal to be audible it need only penetrate the background noise in a one-third or a one octave band. The averaging resulting from A-weighted analysis and design is a simplification that often results in systems being overdesigned. This overdesign is not dangerous but can be costly and is certainly not needed for effective system performance.

A.7.4.5.2 Noise at a lower frequency can mask a signal at an adjacent higher frequency. Thus, it is necessary to calculate the effective masked level of the noise in accordance with established procedures. Figure A.7.4.5.2 shows an example of an octave band analysis of noise along with the calculated effective masked threshold and the proposed fire alarm signal.

A.7.4.6.1 The sound content of directional sounders is very different from that of the traditional fire alarm sounders. Traditional fire alarm sounders have a strong tonal content, usually centered near the 3 kHz region. Directional sounders use broadband frequency content, usually covering most of the human audible frequency range, 20 Hz to 20 kHz. Figure A.7.4.6.1(a) compares the frequency content of a traditional fire alarm sounder to a directional sounder. This figure shows that while the fire alarm sounder clearly dominates the 3 kHz and upper harmonics, the broadband content of the directional sounder is 20 to 30 dB in other frequency bands or ranges. The fire alarm has an overall A-weighted sound level greater than the directional sounder and will be perceived as being louder. However, since the directional sounder has a wide spectral range, the signal penetrates the fire alarm signal in several other frequency bands as permitted by 7.4.5.

There are three main types of information that allow the brain to identify the location of a sound. The first two are known as binaural cues because they make use of the fact that we have two ears, separated by the width of our head. A sound that emanates from either side of the mid-line will arrive first at the ear closer to it and will be loudest at the ear closer to it. At low frequencies the brain recognizes differences in the arrival time of sound between the ears (interaural time differences). At higher frequencies the salient signal is the loudness/intensity difference between the sounds at each ear (interaural intensity differences). Refer to Figure A.7.4.6.1(b). For single frequencies, these cues are spatially ambiguous.

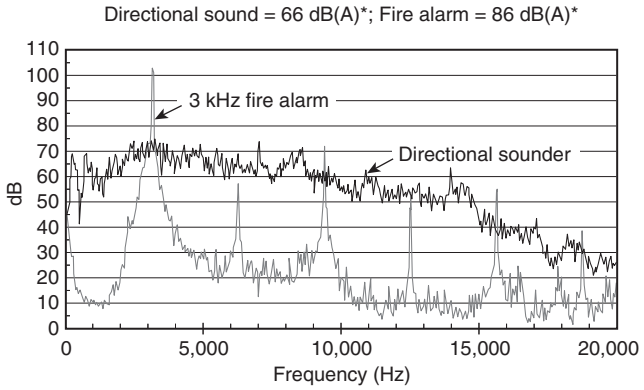

* Measured at 10 ft in an anechoic room.

FIGURE A.7.4.6.1(a) Comparison of Frequency Content of a Traditional Fire Alarm Sounder to a Directional Sounder.

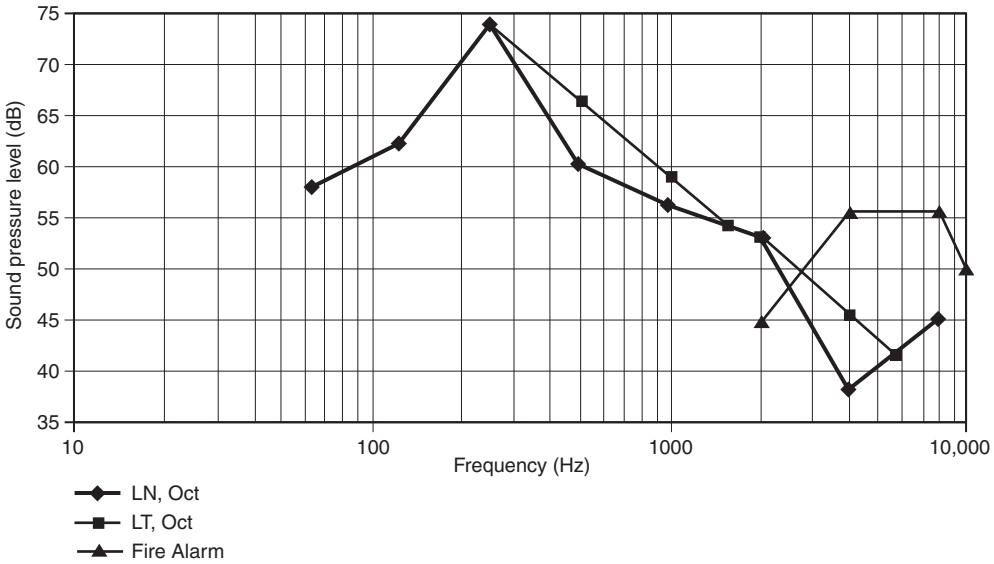

At the first octave band center frequency, the masked threshold of hearing, LT, Oct is equal to the noise level. For each subsequent center frequency, LT, Oct is the greater of either the noise level at that octave band, LN, Oct, or the masked threshold of the previous band less 7.5 dB.

FIGURE A.7.4.5.2 Threshold Masking Level Example.

--`,,```,,,,````-`-`,,`,,`,`,,`---
Copyright National Fire Protection Association
Provided by IHS under license with NFPA
No reproduction or networking permitted without license from IHS
Not for Resale

The inherent ambiguity has been described as the "cone of confusion." This arises from the fact that for any given frequency there are numerous spatial positions that generate identical timing/intensity differences. These can be graphically represented in the form of a cone, the apex of which is at the level of the external ear. The cone of confusion is the main reason for our not being able to localize pure tones.

The final piece of sound localization information processed by the brain is the head-related transfer function (HRTF). The HRTF refers to the effect the external ear has on sound. As a result of passing over the bumps or convolutions of the pinna, the sound is modified so that some frequencies are attenuated and others are amplified. Refer to Figure A.7.4.6.1(c). Although there are certain generalities in the way the pinnae modify sound, the HRTF is unique to each individual. The role of the HRTF is particularly important when determining whether a sound is in front of or behind us. In this instance the timing and intensity differences are negligible, and there is consequently very little information available to the central nervous system on which to base this decision. To locate the direction of a sound source, the larger the frequency content to overcome the ambiguities inherent to single tones, the better the accuracy.

A.7.4.6.2 *ITD*: A difference in arrival times of waveform features (such as peaks and positive-going zero crossings) at the two ears is known as the interaural time difference, or ITD. The binaural physiology is capable of using phase information from ITD cues only at low frequencies below about 1500 Hz. However, the binaural system can successfully register an ITD that occurs at a high frequency such as 4000 Hz if the signal is modulated. The modulation, in turn, must have a rate that is less than about 1000 Hz.

ILD: Comparison between intensities in the left and right ears is known as the interaural level difference, or ILD. ILD cues exist physically only for frequencies above about 500 Hz. They become large and reliable for frequencies above 3000 Hz, making ILD cues most effective at high frequencies.

ATF: The anatomical transfer function (ATF), also known as the head-related transfer function (HRTF), is used by listeners to resolve front–back confusion and to determine elevation. Waves that come from behind tend to be boosted in the 1000 Hz frequency region, whereas waves that come from the forward direction are boosted near 3000 Hz. The most dramatic effects occur above 4000 Hz.

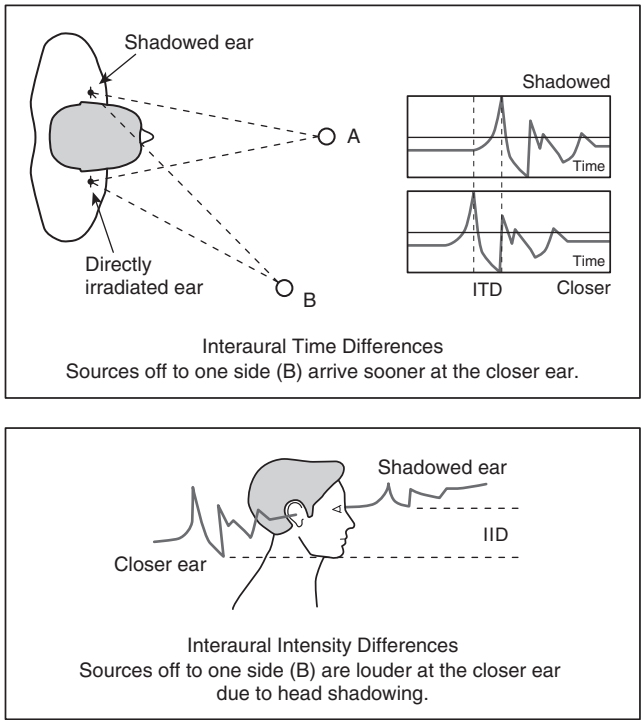

FIGURE A.7.4.6.1(b) Interneural Time and Intensity Differences of Sound.

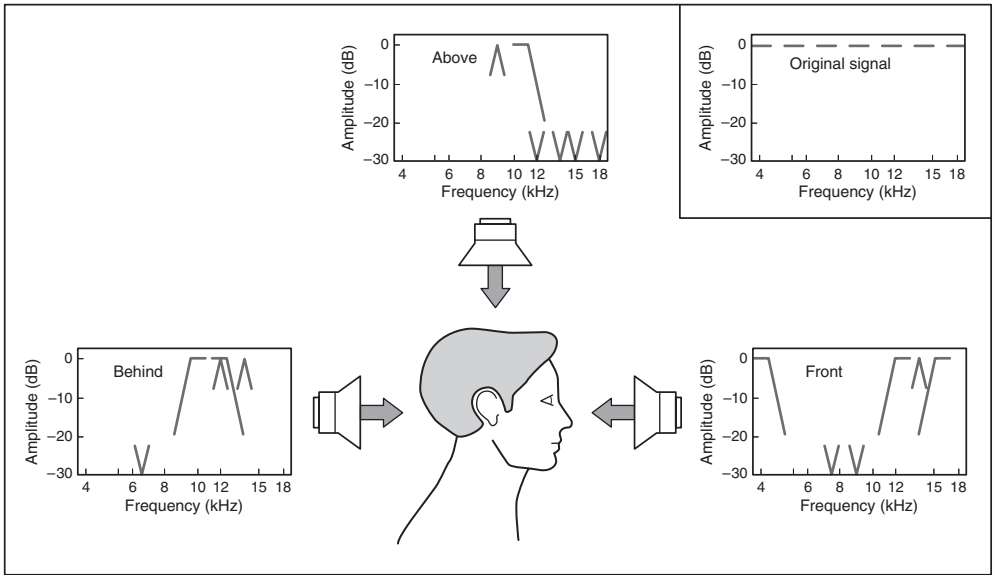

FIGURE A.7.4.6.1(c) Examples of Frequency Dependent Attenuation for Sources in Front, Above, and Behind the Listener.

Copyright National Fire Protection Association
Provided by IHS under license with NFPA
No reproduction or networking permitted without license from IHS
Not for Resale

These localization cues can be implemented simultaneously when the source signal is a broadband sound containing a range of low to high frequencies. For example, octave bands of 1 kHz (707–1414 Hz) for ITD, 4 kHz (2828–5856) Hz for ILD, and 8 kHz (5657–11314 Hz) for ATF would fall within the effective frequency ranges required in 7.4.2.

Additional information on sound localization and auditory localization cues is contained in the following article: http://www.aip.org/pt/nov99/locsound.html, G.2.2.2.

The ability to pinpoint the location of a sound source is based on the physics of sound and the physiology of the human hearing mechanism. The brain processes a large amount of neural signals, some of which provide cues to the sound source's location. People are able to hear sound ranging from about 20 Hz to 20,000 Hz. Unfortunately, pure tones in this frequency range provide only limited localization information. The primary localization cues are provided by interaural time differences (ITDs) (lower frequencies), interaural intensity differences (IIDs) (mid to higher frequencies), and the head-related transfer function (HRTF) (higher frequencies). In enclosed spaces that may be somewhat reverberant, the precedence effect (PE) also provides directional information.

The interaural time difference (ITD) and interaural intensity difference (IID) are termed binaural cues because they depend on both ears separated by the width of the head. At lower frequencies (longer wavelength), the time delay between arriving sound signals is detectable. ITD is most evident in frequencies below about 500 Hz with clicks or short bursts of sound. At higher frequencies (shorter wavelength), the loudness/intensity differences between the ears is more noticeable because of partial shielding of the more distant ear by the head. IID is most evident for frequencies above 3000 Hz.

The head-related transfer function (HRTF) relies on the effect of the external ear on perceived sound. The HRTF describes the transforming effect of the head, torso, and external ear on sound as it travels from the sound source to the ear canals. The HRTF changes depending on sound source location, providing an additional localization cue. HRTF operates over a range of frequencies but seems to be most effective in the 5000 Hz to 10,000 Hz range. Combined with the listener's head motion, HRTF provides an independent localization method to complement ITD and IID capabilities.

The precedence effect (PE) is important for discriminating between the direct sound signal and reflected sound, a common situation within buildings. The ear is capable of discerning and fixating on the first sound received (line-of-sight direct signal) and disregarding later signals (reflected sound). The acoustical signal arriving first at the ears suppresses the ability to hear other signals (including reverberation) that arrive up to about 40 milliseconds after the initial signal.

All of the preceding cues are utilized simultaneously when the source signal is broadband sound containing a range of low and high frequencies, and when the sound arrives in bursts rather than as steady state sound. The combination of different cues provides reinforcement and redundancy of information to enhance the ability to locate the sound source. Broadband sound tends to eliminate potential ambiguities that occur for pure tone or narrowband sound sources.

A.7.4.6.4 Where directional sounders are used, they should not be located on only a single exit. They should be located at all of the identified exits in the building. This is to ensure that in an evacuation or relocation the occupants utilize all of the exits and areas of refuge, not just those that have directional sounders located near them. Some examples of exits would include:

Code-complying exterior doors and exit discharge
Code-complying exit passageway
Code-complying interior stairs, including smokeproof enclosures
Code-complying outside stairs
Code-complying ramps
Code-complying fire escapes
Code-complying horizontal exits

A.7.5 The mounting height of the appliances affects the distribution pattern and level of illumination produced by an appliance on adjacent surfaces. It is this pattern, or effect, that provides occupant notification by visible appliances. If mounted too high, the pattern is larger but at a lower level of illumination (measured in lumens per square foot or footcandles). If mounted too low, the illumination is greater (brighter) but the pattern is smaller and might not overlap correctly with that of adjacent appliances.

A qualified designer could choose to present calculations to an authority having jurisdiction showing that it is possible to use a mounting height greater than 2.4 m (96 in.) or less than 2.0 m (80 in.), provided an equivalent level of illumination is achieved on the adjacent surfaces. This can be accomplished by using listed higher intensity appliances or closer spacing, or both.

Engineering calculations should be prepared by qualified persons and should be submitted to the authority having jurisdiction, showing how the proposed variation achieves the same or greater level of illumination provided by the prescriptive requirements of Section 7.5.

The calculations require knowledge of calculation methods for high-intensity strobes. In addition, the calculations require knowledge of the test standards used to evaluate and list the appliance.

A.7.5.1 There are two methods of visible signaling. These are methods in which notification of an emergency condition is conveyed by direct viewing of the illuminating appliance or by means of illumination of the surrounding area.

Visible notification appliances used in the public mode must be located and must be of a type, size, intensity, and number so that the operating effect of the appliance is seen by the intended viewers regardless of the viewer's orientation.

A.7.5.2.4 Effective intensity is the conventional method of equating the brightness of a flashing light to that of a steady-burning light as seen by a human observer. The units of effective intensity are expressed in candelas (or candlepower, which is equivalent to candelas). For example, a flashing light that has an effective intensity of 15 cd has the same apparent brightness to an observer as a 15 cd steady-burning light source.

Measurement of effective intensity is usually done in a laboratory using specialized photometric equipment. Accurate field measurement of effective intensity is not practical. Other units of measure for the intensity of flashing lights, such as peak candela or flash energy, do not correlate directly to effective intensity and are not used in this standard.

Strobe lights might be used to signal fire or other emergencies and might be intended to initiate evacuation, relocation, or some other behavior. Lights intended to initiate evacuation due to fire are required by the Code to be clear or white. Colored lights, such as amber/yellow lights, might be used in a combination system for any emergency (fire, bomb, chemical, weather, etc.) when the intent is for the signal recipient to seek additional information from other sources (voice, text displays, and so on).

Copyright National Fire Protection Association
Provided by IHS under license with NFPA
No reproduction or networking permitted without license from IHS
Not for Resale

Example Scenario 1: A building has a fire alarm system used for general evacuation. A separate mass notification system is used to provide voice instructions and information in the event of non-fire emergencies. The fire alarm system would have white/clear strobes intended to alert occupants of the need to evacuate. The mass notification system would have amber/yellow strobes that are intended to signal the need to get additional information from either audible voice announcements, text or graphical displays, or other information sources controlled or operated from the mass notification system. In the event that both systems are activated at the same time, the strobes should be synchronized per 7.5.4.3.2.

Example Scenario 2: A building has a mass notification system that provides information and instructions for a variety of emergency situations, including fire. Fire alarm initiation might be by a stand-alone fire detection system or may be an integral part of the mass notification system. In the event of an emergency, textual audible appliances are used to provide information. Visible alerting could be accomplished using one set of clear or colored strobes to indicate the need to get additional information. Visible textual information may be provided by text or graphic display or other visible information appliances. The content of the audible and visible messages will vary depending on the emergency.

A.7.5.2.6 It is not the intent to establish viewing and synchronization requirements for viewing locations outdoors. As an example, there is no need for floor No. 1 to be synchronized with floor No. 2 if there is no visible coupling as in an atrium.

Studies have shown that the effect of strobes on photosensitive epilepsy lessens with distance and viewing angle.

As long as the composite flash rate is no greater than that produced by two listed strobes as allowed by 7.5.4.3.2, compliance is achieved.

Example: A ballroom has multiple synchronized strobes operating during an emergency, the doors exiting the ballroom are opened, and the strobes outside in the lobby and corridor are also operating. The strobes in the corridor and lobby are synchronized with each other, but the strobes outside the ballroom are not synchronized with the strobes inside the ballroom. This would be an acceptable application because the composite flash rate does not exceed that allowed by 7.5.4.3.2.

A.7.5.3 The prescriptive requirements of Section 7.5 assume the use of appliances having very specific characteristics of light color, intensity, distribution, and so on. The appliance and application requirements are based on extensive research. However, the research was limited to typical residential and commercial applications such as school classrooms, offices, hallways, and hotel rooms. While these specific appliances and applications will likely work in other spaces, their use might not be the most effective solution and might not be as reliable as other visible notification methods.

For example, in large warehouse spaces and large distribution spaces such as super stores, it is possible to provide visible signaling using the appliances and applications of this chapter. However, mounting strobe lights at a height of 2030 mm to 2440 mm (80 in. to 96 in.) along aisles with rack storage subjects the lights to frequent mechanical damage by forklift trucks and stock. Also, the number of appliances required would be very high. It might be possible to use other appliances and applications not specifically addressed by this chapter at this time. Alternative applications must be carefully engineered for reliability and function and would require permission of the authority having jurisdiction.

Tests of a system in large warehouse/super stores designed using the prescriptive approach of 7.5.4.3 showed that high ambient light levels resulted in both indirect and direct signaling effects. The signal-to-noise ratio produced by the operating visible notification appliances was low in many locations. However, with visible notification appliances located over the aisles or unobstructed by stock, indirect and some direct notification was sometimes achieved. Direct notification occurs even when occupants do not look up toward the ceiling-mounted visible notification appliances due to the extended cone of vision shown in Figure A.7.5.3(a). The visible notification appliance intensity and spacing resulting from the prescriptive design was generally sufficient for occupant notification by a combination of direct and indirect signaling. Testing showed that the best performance was achieved where visible notification appliances were directly over aisles or where visible notification appliances in adjacent aisles were not obstructed by stock. The performance-based design method will almost always result in aisles not having a line of visible notification appliances in them, because the spacing of visible notification appliances can be greater than the spacing of aisles. Also, it is recognized that aisles might be relocated after installation of the system. Good design practice is to place visible notification appliances over aisles, especially those that are likely to remain unchanged such as main aisles, and over checkout areas. Where reorganization of aisles results in visible notification appliances not in or over an aisle, or where that is the base design, it is important to have a clear view from that aisle to a nearby visible notification appliance. See Figure A.7.5.3(b). Some spaces might have marginal visible notification appliance effect (direct or indirect). However, occupants in these large stores and storage occupancies move frequently and place themselves in a position where they receive notification via the visible notification appliances. In addition, complete synchronization of the visible notification appliances in the space produced a desirable effect.

Visible notification using the methods contained in 7.5.4.3 is achieved by indirect signaling. This means the viewer need not actually see the appliance, just the effect of the appliance. This can be achieved by producing minimum illumination on surfaces near the appliance such as the floor, walls, and desks. There must be a sufficient change in illumination to be noticeable. The

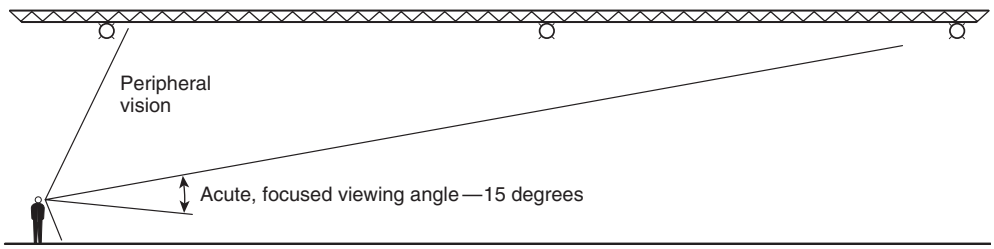

FIGURE A.7.5.3(a) Extended Cone of Vision.

Copyright National Fire Protection Association
Provided by IHS under license with NFPA
No reproduction or networking permitted without license from IHS
Not for Resale

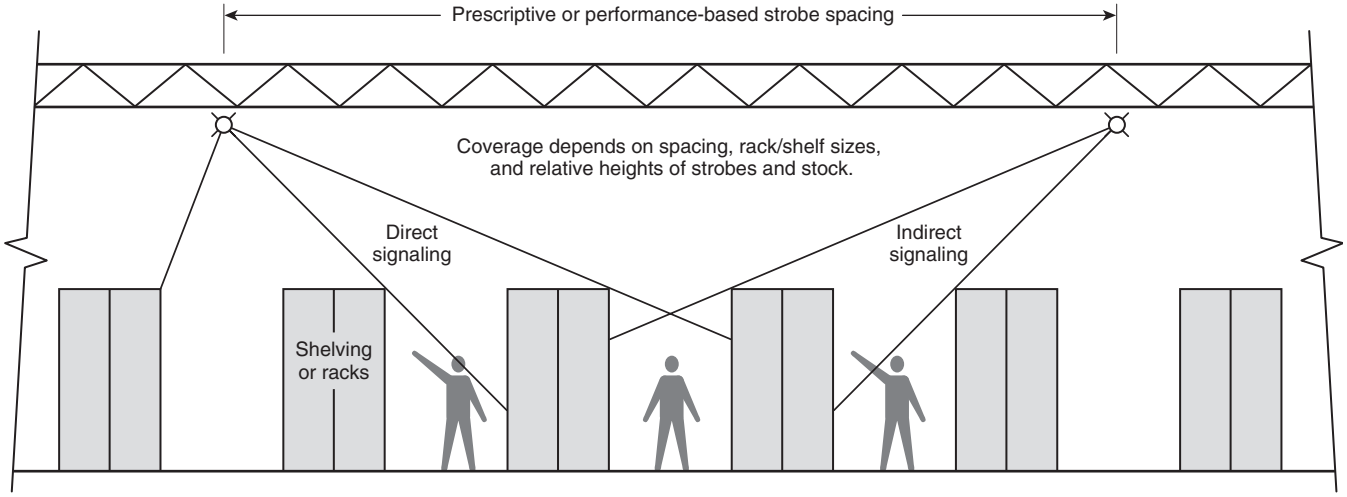

FIGURE A.7.5.3(b) Visible Notification Appliances in Stores.

tables and charts in Section 7.5 specify a certain candela-effective light intensity for certain size spaces. The data were based on extensive research and testing. Appliances do not typically produce the same light intensity when measured off-axis. To ensure that the appliance produces the desired illumination (effect), it must have some distribution of light intensity to the areas surrounding the appliance. UL 1971, *Standard for Safety Signaling Devices for the Hearing Impaired*, specifies the distribution of light shown to provide effective notification by indirect visible signaling.

A.7.5.4.1 The requirements for the location of appliances within a building or structure are intended to apply to strobe lights applied in accordance with 7.5.4.3, 7.5.4.4, and 7.5.4.6. The mounting and location of appliances installed using the performance-based alternative of 7.5.4.5 may be located differently, provided they meet the intended performance requirements. Other appliances, such as graphic displays, video screens, and so on, should be located so that they meet their intended performance.

Where low ceiling heights or other conditions do not permit mounting at a minimum of 2030 mm (80 in.), visible appliances can be mounted at a lower height. However, lowering the mounting height reduces the area of coverage for that strobe. The performance-based methods of 7.5.4.5 can be used to determine the area of coverage. Strobe light mounting height should not be lowered below the plane of normal human viewing [approximately 1.5 m (5 ft)] except where ceiling heights limit the mounting position.

The mounting height requirement of 2030 mm to 2440 mm (80 in. to 96 in.) does not address the possibility of conditions where ceiling heights are less than 2030 mm (80 in.). The range that is permitted (2030 mm to 2440 mm) ensures that strobes are not mounted too high, which would result in lower levels of illumination on surrounding walls and on the floor. The lower limit of the range ensures that a minimum percentage of the surrounding surfaces is illuminated and that the top of the illuminated pattern is at or above the plane of normal human viewing [approximately 1.5 m (5 ft)]. Wall mounting of strobe lights, which are listed only for wall mounting, can result in little or no illumination above the plane of the strobe light. In the case of lower ceiling heights and mounting close to the ceiling, the level of illumination on the floor and surrounding walls is not reduced but the walls have a near 100 percent illuminated or "painted" area because the strobe is close to the ceiling. That is, there is little or no wall surface above the plane of the strobe that is not illuminated when the strobe is mounted close to the ceiling. Thus, when a strobe is mounted lower than the minimum [2030 mm (80 in.)] but still close to the ceiling, the only loss of signal is the smaller pattern produced on the horizontal plane (floor).

In the case where the only change is a lower mounting height due to a lower ceiling height, the room size covered by a strobe of a given value should be reduced by twice the difference between the minimum mounting height of 2030 mm (80 in.) and the actual, lower mounting height. For example, if a 15 cd effective strobe that normally covers a 6.1 m (20 ft) square space is being used and the height of the space is 1.6 m (63 in.) and the strobe is mounted at 1.5 m (59 in.), the strobe can only cover a 5.1 m (17 ft) square space: $6.1 - 2 \times (2.0 - 1.5) = 5.1$ m (17 ft).

The room size reduction assumes that the horizontal pattern on each side of the strobe is reduced by the same amount that the strobe height is reduced.

A.7.5.4.3 The strobe intensities listed in Table 7.5.4.3.1(a) or Table 7.5.4.3.1(b), 7.5.4.4, Table 7.5.4.6.2 or determined in accordance with the performance requirements of 7.5.4.5 are the minimum required intensities. It is acceptable to use a higher intensity strobe in lieu of the minimum required intensity.

Areas large enough to exceed the rectangular dimensions given in Figure A.7.5.4.3(a) through Figure A.7.5.4.3(c) require additional appliances. Often, proper placement of appliances can be facilitated by breaking down the area into multiple squares and dimensions that fit most appropriately *[see Figure A.7.5.4.3(a) through Figure A.7.5.4.3(d)]*. An area that is 12.2 m (40 ft) wide and 24.4 m (80 ft) long can be covered with two 60 cd appliances. Irregular areas and areas with dividers or partitions need more careful planning to make certain that at least one 15 cd appliance is installed for each 6.09 m × 6.09 m (20 ft × 20 ft) area and that light from the appliance is not blocked.

A.7.5.4.3.2(3) The field of view is based on the focusing capability of the human eye specified as 120 degrees in the *Illuminating Engineering Society (IES) Lighting Handbook Reference and Application*. The apex of this angle is the viewer's eye. In order

Copyright National Fire Protection Association
Provided by IHS under license with NFPA
No reproduction or networking permitted without license from IHS
Not for Resale

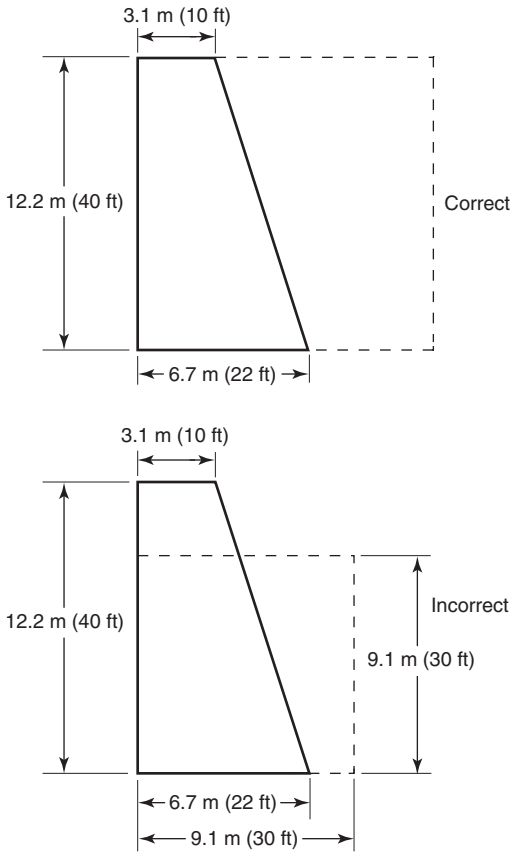

Note: Broken lines represent imaginary walls.

FIGURE A.7.5.4.3(a) Irregular Area Spacing.

to ensure compliance with the requirements of 7.5.4.3.2, this angle should be increased to approximately 135 degrees.

Testing has shown that high flash rates of high-intensity strobe lights can pose a potential risk of seizure to people with photosensitive epilepsy. To reduce this risk, more than two visible appliances are not permitted in any field of view unless their flashes are synchronized. This does not preclude synchronization of appliances that are not within the same field of view.

A.7.5.4.3.6 This subsection is also intended to permit ceiling-mounted strobes to be suspended below the ceiling, provided the strobe height is not below the viewing plane for any ceiling height.

A.7.5.4.4 Because the occupants are usually alert and moving, and because their vision is focused by the narrowness of the space, corridor signaling is permitted to be by direct viewing of lower-intensity (15 cd) appliances. That is, the alerting is intended to be done by direct viewing of the strobe, not necessarily by its reflection off of surfaces (indirect viewing) as required for rooms in 7.5.4.3.

Note that it is acceptable to use 7.5.4.3 (Spacing in Rooms) to determine the number and location of strobes in corridors. If 7.5.4.3 is used, it is not necessary to have a corridor strobe within 4.5 m (15 ft) of the end of the corridor.

See Figure A.7.5.4.4 for corridor spacing for visible appliances.

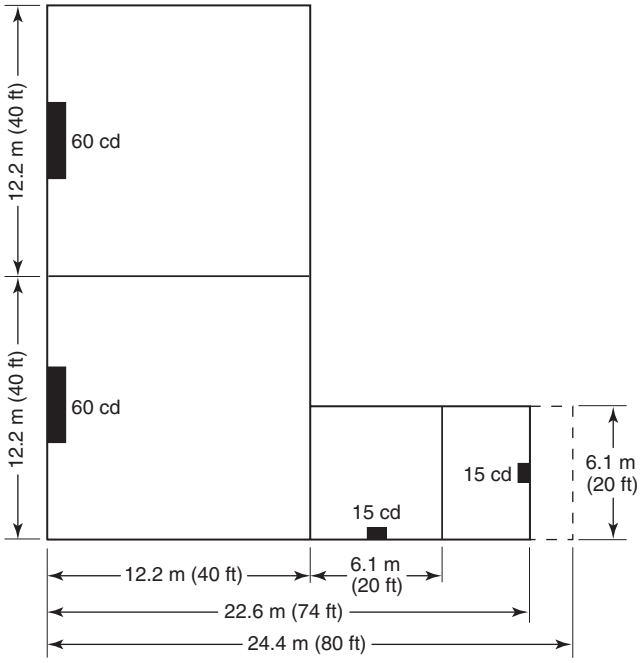

Note: Broken lines represent imaginary walls.

FIGURE A.7.5.4.3(b) Spacing of Wall-Mounted Visible Appliances in Rooms.

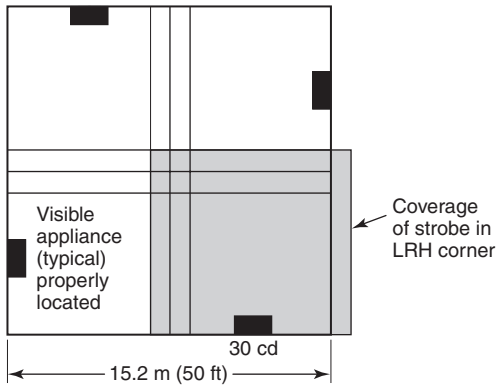

FIGURE A.7.5.4.3(c) Room Spacing Allocation — Correct.

A.7.5.4.4.5 Visible appliances in corridors are permitted to be mounted on walls or on ceilings in accordance with 7.5.4.4. Where there are more than two appliances in a field of view, they need to be synchronized.

Note that it is acceptable to use 7.5.4.3 (Spacing in Rooms) to determine the number and location of strobes in corridors. If 7.5.4.3 is used, it is not necessary to have a corridor strobe within 4.5 m (15 ft) of the end of the corridor. It is not the intent of this section to require strobes at or near every exit or exit access from a corridor.

A.7.5.4.5 A design that delivers a minimum illumination of 0.4037 lumens/m^2 (lux) [0.0375 lumens/ft^2 (footcandles)] to all occupiable spaces where visible notification is required is considered to meet the minimum light intensity requirements of 7.5.4.3.2(1). This level of illumination has been shown to

Copyright National Fire Protection Association
Provided by IHS under license with NFPA
No reproduction or networking permitted without license from IHS
Not for Resale

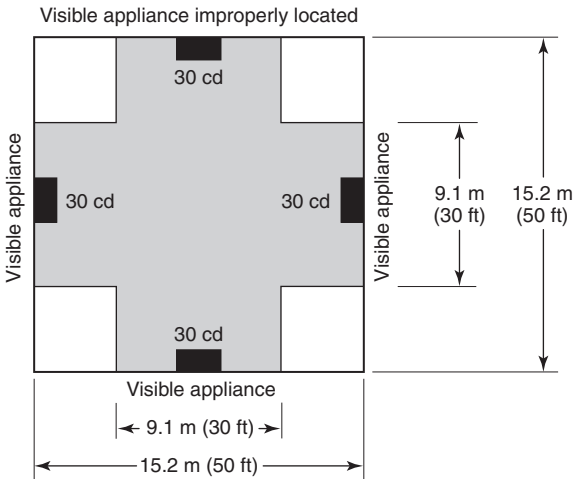

FIGURE A.7.5.4.3(d) Room Spacing Allocation — Incorrect.

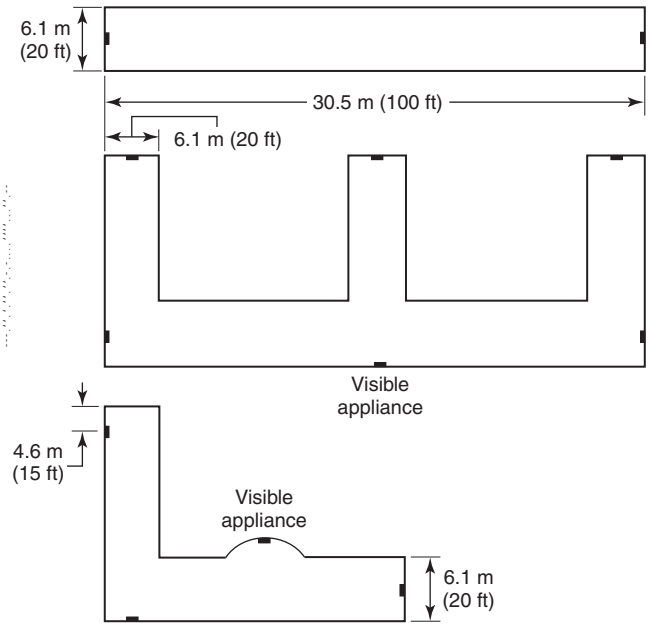

FIGURE A.7.5.4.4 Corridor Spacing for Visible Appliances.

alert people by indirect viewing (reflected light) in a large variety of rooms with a wide range of ambient lighting conditions.

The illumination from a visible notification appliance at a particular distance is equal to the effective intensity of the appliance divided by the distance squared (the inverse square law). Table 7.5.4.3.1(a) and Table 7.5.4.3.1(b) are based on applying the inverse square law to provide an illumination of at least 0.4037 lumens/m^2 (0.0375 lumens/ft^2) throughout each room size. For example, a 60 cd effective intensity appliance in a 12.2 m × 12.2 m (40 ft × 40 ft) room produces 0.4037 lumens/m^2 (0.0375 lumens/ft^2) on the opposite wall 12.2 m (40 ft) away [60 ÷ (12.2 m)^2 or (60 ÷ (40 ft)^2)]. This same 60 cd effective intensity appliance produces 0.4037 lumens/m^2 (0.0375 lumens/ft^2) on the adjacent wall 6.1 m (20 ft) away [60 × 25% ÷ (12.2 m)^2 or (60 × 25% ÷ (20 ft)^2)] where the minimum light output of the appliance at 90 degrees off-axis is 25 percent of rated output per ANSI/UL 1971, *Standard for Safety Signaling Devices for the Hearing Impaired*. Similarly, a 110 cd strobe will produce at least 0.4037 lumens/m^2 (0.0375 lumens/ft^2) in a 16.5 m × 16.5 m (54 ft × 54 ft) room. Calculated intensities in Table 7.5.4.3.1(a) and Table 7.5.4.3.1(b) have been adjusted to standardize the intensity options of presently available products and take into account additional reflections in room corners and higher direct viewing probability when there is more than one appliance in a room.

The application of visible notification appliances in outdoor areas has not been tested and is not addressed in this standard. Visible appliances that are mounted outdoors should be listed for outdoor use (under ANSI/UL 1638, *Visual Signaling Appliances — Private Mode Emergency and General Utility Signaling*, for example) and should be located for direct viewing because reflected light will usually be greatly reduced.

A.7.5.4.6.2 For sleeping areas, the use of lights with other intensities at distances different than within 4.9 m (16 ft) has not been researched and is not addressed in this Code.

This section on strobes for alerting sleeping persons intends that stand-alone strobes be located in accordance with 7.5.4. If the strobe is an integral part of a smoke detector or smoke alarm, the unit must be mounted in accordance with the requirements for the smoke detector or smoke alarm. In either case (stand-alone or combination), Table 7.5.4.6.2 is then consulted to determine the minimum required intensity. Where the appliance is mounted less than 610 mm (24 in.) from the ceiling, it must have a minimum 177 cd effective rating because it might be in a smoke layer at the time it is called upon to operate. If the appliance is 610 mm (24 in.) or more from the ceiling, it is permitted to be rated 110 cd effective or more. Note that the requirement for increasing the intensity when mounted close to the ceiling applies only to strobes used in sleeping areas to awaken sleeping people. It is assumed that in nonsleeping situations, a strobe is not needed to alert someone if there is a developing smoke layer.

A.7.6 Though the number of visible notification appliances might be reduced in private operating mode settings, visible notification appliances might still need to be considered in spaces occupied by the public or the hearing impaired or subject to other laws or codes.

A.7.8.1.2 The evacuation tone signal is used to evaluate the audibility produced by fire alarm speaker appliances because of the fluctuating sound pressure level of voice or recorded messages.

A.7.9 Textual visible appliances are selected and installed to provide temporary text, permanent text, or symbols. Textual visible appliances are most commonly used in the private mode. The use of microprocessors with computer monitors and printers has resulted in the ability to provide detailed fire alarm system information in the form of text and graphics to persons charged with directing emergency response and evacuation. Textual visible appliances are also used in the public mode to communicate emergency response and evacuation information directly to the occupants or inhabitants of the area protected by the fire alarm system. Because textual visible appliances do not necessarily have the ability to alert, they should only be used to supplement audible or visible notification appliances.

Copyright National Fire Protection Association
Provided by IHS under license with NFPA
No reproduction or networking permitted without license from IHS
Not for Resale

Textual visible information should be of a size and visual quality that is easily read. Many factors influence the readability of textual visible appliances, including the following:

(1) Size and color of the text or graphic
(2) Distance from the point of observation
(3) Observation time
(4) Contrast
(5) Background luminance
(6) Lighting
(7) Stray lighting (glare)
(8) Shadows
(9) Physiological factors

While many of these factors can be influenced by the fire alarm equipment manufacturer and by the building designers, there is no readily available method to measure legibility.

A.7.10.2 Notification appliances are available for the deaf and hard of hearing. These appliances include, but are not limited to, supplemental tactical notification appliances. Such tactile notification appliances may be capable of awakening people. Tactile appliances may initiate in response to the activation of an audible smoke alarm, through hard wiring into the fire alarm system or by wireless methods.

Some tests show that strobes may not be effective in awakening some sleeping individuals during an emergency. Some tactile devices may be more effective in awakening individuals, regardless of hearing levels, from sleep.

A.7.11 *Standard Fire Service Interface.* Annunciators, information display systems, and controls for portions of a system provided for use by the fire service should be designed, arranged, and located in accordance with the needs of the organizations intended to use the equipment.

Where annunciators, information display systems, and controls for portions of the fire alarm system are provided for use by the fire service, these should have a common design and operation to avoid confusion of users.

See Annex F, NEMA Standards Publication SB 30–2005, *Fire Service Annunciator and Interface.*

A.8.1 Table A.8.1 provides a tool for users of the Code to easily and systematically look up requirements for protected premises, central station service, remote supervising station, and proprietary supervising station fire alarm systems.

A.8.1.1 Supervising station fire alarm systems include the equipment at the protected premises as well as the equipment at the supervising station itself. While the operational requirements relating to the signals sent off-premises fall under the scope of Chapter 8, the requirements of Chapter 6 also apply. Refer to Figure A.8.1.1.

A.8.2.3 Changing where signals go from an existing to a new or different supervising station facility is sometimes done simply by changing a call-forward phone number. Or, within a supervising station, a new receiving computer and software can be constructed and lines changed over. Often, the account data are manually entered into the new system. Sometimes the data are transferred electronically. Errors can be made, causing the supervising station to get undefined alarms or incorrect account data, resulting in incorrect response by the supervising station. When such changes are made, the only visible way to ensure correct operation is to conduct an end-to-end test.

A.8.3.2 There are related types of contract service that often are provided from, or controlled by, a central station but that are neither anticipated by, nor consistent with, the provisions of 8.3.2. Although 8.3.2 does not preclude such arrangements, a central station company is expected to recognize, provide for, and preserve the reliability, adequacy, and integrity of those supervisory and alarm services intended to be in accordance with the provisions of 8.3.2.

A.8.3.4 The terms *certificated* and *placarded*, which appeared in previous editions of *NFPA 72*, were considered by some to be too specific to two listing organizations and were replaced with more generic wording. The concept of providing documentation to indicate ongoing compliance of an installed system continues to be reflected by the current language.

A.8.3.4.2(2) The record of completion *(see Chapter 4)* may be used to fulfill this requirement.

A.8.3.4.5 It is the prime contractor's responsibility to remove all compliance markings (certification markings or placards) when a service contract goes into effect that conflicts in any way with the requirements of 8.3.4.

A.8.3.4.6 The prime contractor should be aware of statutes, public agency regulations, or certifications regarding fire alarm systems that might be binding on the subscriber. The prime contractor should identify for the subscriber which agencies could be an authority having jurisdiction and, if possible, advise the subscriber of any requirements or approvals being mandated by these agencies.

The subscriber has the responsibility for notifying the prime contractor of those private organizations that are being designated as an authority having jurisdiction. The subscriber also has the responsibility to notify the prime contractor of changes in the authority having jurisdiction, such as where there is a change in insurance companies. Although the responsibility is primarily the subscriber's, the prime contractor should also take responsibility for seeking out these private authority(ies) having jurisdiction through the subscriber. The prime contractor is responsible for maintaining current records on the authority(ies) having jurisdiction for each protected premises.

The most prevalent public agency involved as an authority having jurisdiction with regard to fire alarm systems is the local fire department or fire prevention bureau. These are normally city or county agencies with statutory authority, and their approval of fire alarm system installations might be required. At the state level, the fire marshal's office is most likely to serve as the public regulatory agency.

The most prevalent private organizations involved as authorities having jurisdiction are insurance companies. Others include insurance rating bureaus, insurance brokers and agents, and private consultants. It is important to note that these organizations have no statutory authority and become authorities having jurisdiction only when designated by the subscriber.

With both public and private concerns to satisfy, it is not uncommon to find multiple authorities having jurisdiction involved with a particular protected premises. It is necessary to identify all authorities having jurisdiction in order to obtain all the necessary approvals for a central station fire alarm system installation.

Copyright National Fire Protection Association
Provided by IHS under license with NFPA
No reproduction or networking permitted without license from IHS
Not for Resale

Table A.8.1 Fire Alarm System Performance Criteria

Attribute	Protected Premises Fire Alarm System	Central Station Service Fire Alarm System	Remote Supervising Station Fire Alarm System	Proprietary Supervising Station Fire Alarm System
Applicability	All fire alarm systems	Supervising station service provided by a prime contractor. There is a subscriber *(8.3.2, 8.3.3, and 8.3.4)*.	Where central station service is neither required nor elected, properties under various ownership monitored by a remote supervising station *(8.5.1.1 and 8.5.1.2)*	Supervising station monitoring contiguous or noncontiguous properties under one ownership and responsible to the owner of the protected property *(8.4.2.1 and 8.4.2.2)*
Listing	Equipment listed for the use intended *(4.3.1)*	Equipment listed for the use intended *(4.3.1)*. Compliance documentation *(8.3.4)*.	Equipment listed for use intended *(4.3.1)*	Equipment listed for use intended *(4.3.1)*
Design	According to code by experienced persons *(4.3.2)*	According to code by experienced persons *(4.3.2)*	According to code by experienced persons *(4.3.2)*	According to code by experienced persons *(4.3.2)*
Compatibility	Detector devices pulling power from initiating or signaling circuits listed for control unit *(4.4.2)*	Detector devices pulling power from initiating or signaling circuits listed for control unit *(4.4.2)*	Detector devices pulling power from initiating or signaling circuits listed for control unit *(4.4.2)*	Detector devices pulling power from initiating or signaling circuits listed for control unit *(4.4.2)*
Performance and Limitations	85% and 110% of the nameplate rated input voltage, 0°C (32°F) and 49°C (120°F) ambient temperature, 85% relative humidity at 29.4°C (85°F) *(4.4.4.1)*	85% and 110% of the nameplate rated input voltage, 0°C (32°F) and 49°C (120°F) ambient temperature, 85% relative humidity at 29.4°C (85°F) *(4.4.4.1)*	85% and 110% of the nameplate rated input voltage, 0°C (32°F) and 49°C (120°F) ambient temperature, 85% relative humidity at 29.4°C (85°F) *(4.4.4.1)*	85% and 110% of the nameplate rated input voltage, 0°C (32°F) and 49°C (120°F) ambient temperature, 85% relative humidity at 29.4°C (85°F) *(4.4.4.1)*
Documentation	Authority having jurisdiction notified of new or changed specifications, wiring diagrams, battery calculations, floor plans. Statement from contractor that system meets manufacturer's published instructions and NFPA requirements *(4.5.1)*. Record of completion *(4.5.2)*. Results of evaluation required in 6.4.3.3.	Authority having jurisdiction notified of new or changed specifications, wiring diagrams, battery calculations, floor plans. Statement from contractor that system meets manufacturer's published instructions and NFPA requirements *(4.5.1)*. Record of completion *(4.5.2)*. Results of evaluation required in 6.4.3.3.	Authority having jurisdiction notified of new or changed specifications, wiring diagrams, battery calculations, floor plans. Statement from contractor that system meets manufacturer's published instructions and NFPA requirements *(4.5.1)*. Record of completion *(4.5.2)*. Results of evaluation required in 6.4.3.3.	Authority having jurisdiction notified of new or changed specifications, wiring diagrams, battery calculations, floor plans. Statement from contractor that system meets manufacturer's published instructions and NFPA requirements *(4.5.1)*. Record of completion *(4.5.2)*. Results of evaluation required in 6.4.3.3.
Supervising Station Facilities	None	UL 827 compliant for the supervising station and any subsidiary station *(8.3.5.1 and 8.3.5.2)*	Public fire service communications centers or other location acceptable to the authority having jurisdiction *(8.5.2)*	Fire-resistive, detached building or cut-off room not near or exposed to hazards. Access restricted, NFPA 10, 26-hour emergency lighting *(8.4.3)*.
Testing and Maintenance	Chapter 10	Chapter 10. Pass code must be provided to place system into test mode *(8.3.7.5.6)*	Chapter 10	Chapter 10

(continues)

Copyright National Fire Protection Association
Provided by IHS under license with NFPA
No reproduction or networking permitted without license from IHS
Not for Resale

Table A.8.1 *Continued*

Attribute	Protected Premises Fire Alarm System	Central Station Service Fire Alarm System	Remote Supervising Station Fire Alarm System	Proprietary Supervising Station Fire Alarm System
Runner Service	No	Yes. Alarm — arrive at the protected premises within 2 hours where equipment needs to be reset. Guard's tour — 30 minutes. Supervisory — 2 hours. Trouble — 4 hours. *(8.3.7)*	No	Yes. Alarm — arrive at the protected premises within 2 hours where equipment needs to be reset. Guard's tour — 30 minutes. Supervisory — 2 hours. Trouble — 4 hours. *(8.4.5.6)*
Operations and Management Requirements	None	Prime contractor provides all elements of central station service under a variety of contractual arrangements *(8.3.2)*	None	Supervising station is under same ownership and management responsibility as premises being supervised
Staff	None	Minimum of two persons on duty at supervising station. Operation and supervision primary task *(8.3.6.2)*.	Minimum of two persons on duty at supervising station at all times. Other duties permitted per the authority having jurisdiction *(8.5.3.5)*.	Two operators of which one may be the runner. When runner is not in attendance at station, time between contact not to exceed 15 minutes. Primary duties are monitoring alarms and operations of station *(8.4.4.6)*.
Monitor Supervisory Signals	Control unit and fire command center *(4.4.3.2.3 and 4.4.3.2.4)*	Control unit, fire command center, and central station *(4.4.3.2.3 and 4.4.3.2.4)*	Control unit, fire command center, and remote supervising station *(4.4.3.2.3 and 4.4.3.2.4)*	Control unit, fire command center, and proprietary supervising station *(4.4.3.2.3 and 4.4.3.2.4)*
Retransmission of Signals	None	Alarm to public fire service communications center and subscriber. Supervisory, trouble, and guard service to designated personnel *(8.3.7)*.	Alarm to public fire service communications center when monitored privately. Supervisory and trouble signals to owner's designated representative *(8.5.4)*.	Alarm to public fire service communications center and plant fire brigade. Supervisory, trouble, and guard service to designated personnel *(8.4.5.6)*.
Retransmission Time	None	Alarm — immediate. Supervisory — immediate. Guard's tour supervisory — without unreasonable delay. Trouble — immediate. *(8.3.7)*	Alarm — immediate. Supervisory — immediate. Trouble — immediate. *(8.5.4)*	Alarm — immediate. Supervisory — immediate. Guard's tour supervisory — at once. Trouble — immediate. *(8.4.5.6)*
Records	Current year and 1 year after *(4.5.3)*	Complete records of all signals received must be retained for at least 1 year. Reports provided of signals received to authority having jurisdiction in a form it finds acceptable *(8.3.8)*.	At least 1 year *(8.5.5.1)*.	Complete records of all signals received shall be retained for at least 1 year. Reports provided of signals received to authority having jurisdiction in a form it finds acceptable *(8.4.6)*.

Copyright National Fire Protection Association
Provided by IHS under license with NFPA
No reproduction or networking permitted without license from IHS
Not for Resale

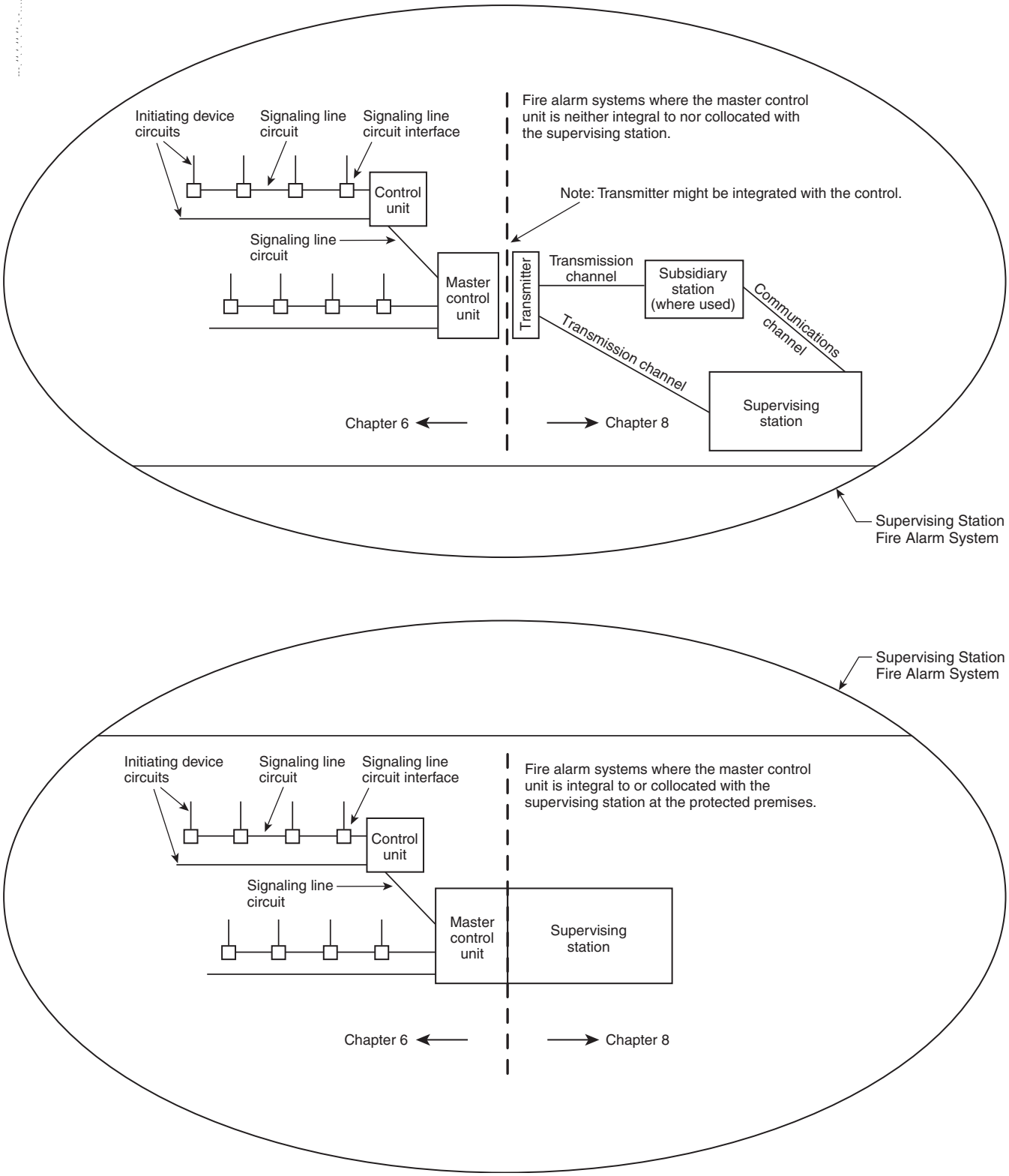

FIGURE A.8.1.1 Supervising Station Fire Alarm System.

Copyright National Fire Protection Association
Provided by IHS under license with NFPA
No reproduction or networking permitted without license from IHS
Not for Resale

A.8.3.6.1.6 Two telephone lines (numbers) at the central station connected to the public switched telephone network, each having its own telephone instrument connected, and two telephone lines (numbers) available at the public fire service communications center to which a central station operator can retransmit an alarm meet the intent of this requirement.

A.8.3.7.1.2(1) The term *immediately* in this context is intended to mean "without unreasonable delay." Routine handling should take a maximum of 90 seconds from receipt of an alarm signal by the central station until the initiation of retransmission to the public fire service communications center.

A.8.3.7.3 It is anticipated that the central station will first attempt to notify designated personnel at the protected premises. When such notification cannot be made, it might be appropriate to notify law enforcement or the fire department, or both. For example, if a valve supervisory signal is received where protected premises are not occupied, it is appropriate to notify the police.

A.8.3.7.3(1) The term *immediately* in this context is intended to mean "without unreasonable delay." Routine handling should take a maximum of 4 minutes from receipt of a supervisory signal by the central station until the initiation of communications with a person(s) designated by the subscriber.

A.8.3.7.4(1) The term *immediately* in this context is intended to mean "without unreasonable delay." Routine handling should take a maximum of 4 minutes from receipt of a trouble signal by the central station until initiation of the investigation by telephone.

A.8.3.7.5.3 The term *immediately* in this context is intended to mean "without unreasonable delay." Routine handling should take a maximum of 4 minutes from receipt of a trouble signal by the central station until initiation of the investigation by telephone.

A.8.4.2.4 The following functions are included in Annex A to provide guidelines for utilizing building systems and equipment in addition to proprietary fire alarm equipment in order to provide life safety and property protection.

Building functions that should be initiated or controlled during a fire alarm condition include, but should not be limited to, the following:

(1) Elevator operation consistent with ANSI/ASME A17.1, *Safety Code for Elevators and Escalators*
(2) Unlocking of stairwell and exit doors *(see* NFPA 80, *Standard for Fire Doors and Fire Windows, and* NFPA *101*, *Life Safety Code)*
(3) Release of fire and smoke dampers *(see* NFPA 90A, *Standard for the Installation of Air-Conditioning and Ventilating Systems*, and NFPA 90B, *Standard for the Installation of Warm Air Heating and Air-Conditioning Systems)*
(4) Monitoring and initiating of self-contained automatic fire extinguishing system(s) or suppression system(s) and equipment *(see* NFPA 11, *Standard for Low-, Medium-, and High-Expansion Foam*; NFPA 12, *Standard on Carbon Dioxide Extinguishing Systems*; NFPA 12A, *Standard on Halon 1301 Fire Extinguishing Systems;* NFPA 13, *Standard for the Installation of Sprinkler Systems;* NFPA 14, *Standard for the Installation of Standpipe and Hose Systems;* NFPA 15, *Standard for Water Spray Fixed Systems for Fire Protection;* NFPA 17, *Standard for Dry Chemical Extinguishing Systems; and* NFPA 17A, *Standard for Wet Chemical Extinguishing Systems)*
(5) Lighting control necessary to provide essential illumination during fire alarm conditions *(see* NFPA 70, *National Electrical Code*, and NFPA *101*, *Life Safety Code)*
(6) Emergency shutoff of hazardous gas
(7) Control of building environmental heating, ventilating, and air-conditioning equipment to provide smoke control *(see* NFPA 90A, *Standard for the Installation of Air-Conditioning and Ventilating Systems)*
(8) Control of process, data processing, and similar equipment as necessary during fire alarm conditions

A.8.4.4.3 Proprietary station procedures should include periodic review of nonrestored signals. One method for such a review could be by the use of equipment that would automatically redisplay the information.

A.8.4.5.4 It is the intent of this Code that the operator within the proprietary supervising station should have a secure means of immediately retransmitting any signal indicative of a fire to the public fire department communications center. Automatic retransmission using an approved method installed in accordance with Sections 8.3 through 8.5, and Chapter 9 is the best method for proper retransmission. However, a manual means can be permitted to be used, consisting of either a manual connection following the requirements of Section 8.3, Section 8.5, and Chapter 9, or, for proprietary supervising stations serving only contiguous properties, a means in the form of a municipal fire alarm box installed within 15 m (50 ft) of the proprietary supervising station in accordance with Chapter 9 can be permitted.

A.8.4.5.5 Regardless of the type of retransmission facility used, telephone communications between the proprietary supervising station and the fire department should be available at all times and should not depend on a switchboard operator.

A.8.5.2 As a minimum, the room or rooms containing the remote supervising station equipment should have a 1-hour fire rating, and the entire structure should be protected by an alarm system complying with Chapter 6.

A.8.5.2.1.2 A listed central station might be considered an acceptable alternate location for receipt of fire alarm and supervisory signals.

A.8.6.1 Refer to Table A.8.6.1 for communications methods.

A.8.6.2.2 It is not the intent of Section 8.6 to limit the use of listed equipment using alternate communications methods, provided these methods demonstrate performance characteristics that are equal to or superior to those technologies described in Section 8.6. Such demonstration of equivalency is to be evidenced by the equipment using the alternate communications methods meeting all the requirements of Chapter 4, including those that deal with such factors as reliability, monitoring for integrity, and listing. It is further expected that suitable proposals stating the requirements for such technology will be submitted for inclusion in subsequent editions of this Code.

Copyright National Fire Protection Association
Provided by IHS under license with NFPA
No reproduction or networking permitted without license from IHS
Not for Resale

Table A.8.6.1 Communications Methods for Supervising Stations

Criteria	Active Multiplex 8.6.3.1	Digital Alarm Communicator Systems 8.6.3.2	McCulloh Systems 8.6.3.3	Two-Way Radio Frequency (RF) Multiplex Systems 8.6.3.4	One-Way Private Radio Alarm Systems 8.6.3.5	Directly Connected Noncoded Systems 8.6.3.6	Private Microwave Radio Systems 8.6.3.7	Other Transmission Technologies 8.6.4
FCC approval when applicable	Yes	Yes	Yes	Yes	Yes	Yes	Yes	Yes
Conform to NFPA 70, *National Electrical Code*	Yes	Yes	Yes	Yes	Yes	Yes	Yes	Yes
Monitoring for integrity of the transmission and communications channel	Systems are periodically polled for end-to-end communications integrity	Both the premises unit and the system unit monitor for integrity in a manner approved for the means of transmission employed. A single signal received on each incoming DACR line once every 24 hours.	Continuous dc supervision	Systems are periodically polled for end-to-end communications integrity	Test signal from every transmitter once every 24 hours	Continuous dc supervision	Used as a portion of another type of transmission technology. End-to-end integrity monitored by the main transmission technology. Microwave portion is continuously monitored.	Monitor for integrity or provide back-up channel tested as below
Annunciate, at the supervising station, the degradation and restoration of the transmission or communications channel	Within 200 seconds for Type III multiplex. Within 90 seconds for Type I and II multiplex.	Within 4 minutes using alternate phone line to report the trouble	Indicate automatically an operation under fault condition achieved either manually or automatically	Not exceed 90 seconds from the time of the actual failure	Only monitor the quality of signal received and indicate if the signal falls below minimum signal quality specified in Code	Presented in a form to expedite prompt operator interpretation	Presented in a form to expedite prompt operator interpretation	Within 5 minutes (may use a second separate path to report failure)
Redundant communication path where a portion of the transmission or communications channel cannot be monitored for integrity	Redundant path not required — supervising station always indicates a communications failure	Employ a combination of two separate transmission channels alternately tested at intervals not exceeding 24 hours	Redundant path not required — supervising station always indicates a communications failure. Exception is the use of nonmetallic channels that require two channels or an immediate transfer to a standby channel.	Redundant path not required — supervising station always indicates a communications failure	Minimum of two independent RF paths must be simultaneously employed	None required	Dual transmitters required if more than 5 buildings or premises or 50 initiating device circuits	Provide a redundant path if communication failure not annunciated at supervising station
Interval testing of the back-up path(s)	For Type I, 1-hour testing for dedicated lines and 24-hour testing for dial-up. No requirement for Type II and III.	When two phone lines are used, test alternately every 24 hours. Testing for other back-up technologies, see 8.6.3.2.1.4(B).	No testing requirement	Back-up path not required	No requirement because the quality of the signal is continuously monitored	Back-up path not required	Dual transmitters must be operated on time ratio of 2:1 within each 24 hours	If back-up path required, test path once every 24 hours on alternating channels, testing each channel every 48 hours

(continues)

Copyright National Fire Protection Association
Provided by IHS under license with NFPA
No reproduction or networking permitted without license from IHS
Not for Resale

Table A.8.6.1 *Continued*

Criteria	Active Multiplex 8.6.3.1	Digital Alarm Communicator Systems 8.6.3.2	McCulloh Systems 8.6.3.3	Two-Way Radio Frequency (RF) Multiplex Systems 8.6.3.4	One-Way Private Radio Alarm Systems 8.6.3.5	Directly Connected Noncoded Systems 8.6.3.6	Private Microwave Radio Systems 8.6.3.7	Other Transmission Technologies 8.6.4
Annunciation of communication failure or ability to communicate at the protected premises	Not required — always annunciated at the supervising station that initiates corrective action	Indication of failure at premises due to line failure or failure to communicate after from 5 to 10 dialing attempts	Not required — always annunciated at the supervising station that initiates corrective action	Not required — always annunciated at the supervising station that initiates corrective action	Monitor the interconnection of the premises unit elements of transmitting equipment and indicate a failure at the premises or transmit a trouble signal to the supervising station	None required	None required	Systems where the transmitter at the local premises unit detects a communication failure before the supervising station, the premises unit will annunciate the failure within 5 minutes of detecting the failure
Time to restore signal receiving, processing, display, and recording equipment	Where duplicate equipment not provided, spare hardware required so a repair can be effected within 30 minutes	Spare digital alarm communicator receivers required for switchover to back-up receiver in 30 seconds. One back-up system unit for every 5 system units.	Where duplicate equipment not provided, spare hardware required so a repair can be effected within 30 minutes	Where duplicate equipment not provided, spare hardware required so a repair can be effected within 30 minutes	Where duplicate equipment not provided, spare hardware required so a repair can be effected within 30 minutes	Where duplicate equipment not provided, spare hardware required so a repair can be effected within 30 minutes	Where duplicate equipment not provided, spare hardware required so a repair can be effected within 30 minutes	Where duplicate equipment not provided, spare hardware required so a repair can be effected within 30 minutes. Complete set of critical spare parts on a 1 to 5 ratio of parts to system units or a duplicate functionally equivalent system unit for every 5 system units
Loading capacities for system units and transmission and communications channels	512 buildings and premises on one system unit. Unlimited if you can switch to duplicate system unit within 30 seconds. Loading capacity for transmission and communications channels (trunks) is listed in Table 8.6.3.1.7.	See Table 8.6.3.2.2.2 for the maximum number of transmitters on a hunt group in a system unit	Alarm and sprinkler supervisory limited to 25 plants and 250 code wheels on one circuit. 60 scheduled guard reports per hour.	512 buildings and premises on a system unit with no back-up. Unlimited if you can switch to a back-up in 30 seconds.	512 buildings and premises on a system unit with no back-up. Unlimited if you can switch to a back-up in 30 seconds.	A single circuit must not serve more than one plant.	Up to 5 buildings or premises or 50 initiating device circuits on one transmitter. Unlimited if dual transmitters are used with automatic switchover or manual switchover in 30 seconds.	512 independent fire alarm systems on a system unit with no back-up. Unlimited if you can switch to a back-up in 30 seconds. The system must be designed such that a failure of a transmission channel serving a system unit must not result in the loss in the ability to monitor more than 3000 transmitters.
End-to-end communication time for an alarm	90 seconds from initiation until it is recorded	Off-hook to on-hook not to exceed 90 seconds per attempt. 10 attempts maximum. 900 seconds maximum for all attempts.	Not addressed	90 seconds from initiation until it is recorded	90% probability to receive an alarm in 90 seconds, 99% probability in 180 seconds, 99.999% probability in 450 seconds	Not addressed	Not addressed	90 seconds from initiation of alarm until displayed to the operator and recorded on a medium from which the information can be retrieved

Copyright National Fire Protection Association
Provided by IHS under license with NFPA
No reproduction or networking permitted without license from IHS
Not for Resale

Table A.8.6.1 *Continued*

Criteria	Active Multiplex 8.6.3.1	Digital Alarm Communicator Systems 8.6.3.2	McCulloh Systems 8.6.3.3	Two-Way Radio Frequency (RF) Multiplex Systems 8.6.3.4	One-Way Private Radio Alarm Systems 8.6.3.5	Directly Connected Noncoded Systems 8.6.3.6	Private Microwave Radio Systems 8.6.3.7	Other Transmission Technologies 8.6.4
Record and display rate of subsequent alarms at supervising station	Not slower than one every 10 additional seconds	Not addressed	Not addressed	When any number of subsequent alarms come in, record at a rate not slower than one every additional 10 seconds	When any number of subsequent alarms come in, record at a rate not slower than one every additional 10 seconds	Not addressed	Not addressed	No slower than one every 10 additional seconds
Signal error detection and correction	Not addressed	Signal repetition, digital parity check, or some equivalent means of signal verification must be used	Not addressed	Not addressed	Not addressed	Not applicable	Not addressed	Signal repetition, parity check, or some equivalent means of error detection and correction must be used.
Path sequence priority	Not addressed	The first transmission attempt uses the primary channel	Not addressed	Not addressed	Not addressed	Not addressed	Not addressed	No need for prioritization of paths. The requirement is that both paths are equivalent.
Carrier diversity	None required	Where long distance service (including WATS) is used, the second telephone number must be provided by a different long distance service provider where there are multiple providers.	Not addressed	Not addressed	Not addressed	Not addressed	Not addressed	When a redundant path is required, the alternate path must be provided by a public communication service provider different from the primary path where available.
Throughput probability	Not addressed	Demonstrate 90% probability of a system unit immediately answering a call or follow the loading Table 8.6.3.2.2.2. One-way radio back-up demonstrates 90% probability of transmission.	Not addressed	Not addressed	90% probability to receive an alarm in 90 seconds, 99% probability in 180 seconds, 99.999% in probability 450 seconds	Not addressed	Not addressed	When the supervising station does not regularly communicate with the transmitter at least once every 200 seconds, then the throughput probability of the alarm transmission must be at least 90% in 90 seconds, 99% in 180 seconds, 99.999% in 450 seconds.
Unique premises identifier	Yes	Yes	Yes	Yes	Yes	Yes	Yes	If a transmitter shares a transmission or communication channel with other transmitters, it must have a unique transmitter identifier.

(continues)

Copyright National Fire Protection Association
Provided by IHS under license with NFPA
No reproduction or networking permitted without license from IHS
Not for Resale

Table A.8.6.1 *Continued*

Criteria	Active Multiplex 8.6.3.1	Digital Alarm Communicator Systems 8.6.3.2	McCulloh Systems 8.6.3.3	Two-Way Radio Frequency (RF) Multiplex Systems 8.6.3.4	One-Way Private Radio Alarm Systems 8.6.3.5	Directly Connected Noncoded Systems 8.6.3.6	Private Microwave Radio Systems 8.6.3.7	Other Transmission Technologies 8.6.4
Unique flaws	None addressed	If call forwarding is used to communicate to the supervising station, verify the integrity of this feature every 4 hours.	None addressed	None addressed	None addressed	None addressed	None addressed	From time to time, there may be unique flaws in a communication system. Unique requirements must be written for these unique flaws.
Signal priority	Fire alarm, supervisory, and trouble signals must take precedence, in that respective order of priority, over all other signals (except-life threatening signals over supervisory and trouble).	Chapter 1 on fundamentals requires that alarm signals take priority over supervisory signals unless there is sufficient repetition of the alarm signal to prevent the loss of an alarm signal.	Chapter 1 on fundamentals requires that alarm signals take priority over supervisory signals unless there is sufficient repetition of the alarm signal to prevent the loss of an alarm signal.	Chapter 1 on fundamentals requires that alarm signals take priority over supervisory signals unless there is sufficient repetition of the alarm signal to prevent the loss of an alarm signal.	Chapter 1 on fundamentals requires that alarm signals take priority over supervisory signals unless there is sufficient repetition of the alarm signal to prevent the loss of an alarm signal.	Chapter 1 on fundamentals requires that alarm signals take priority over supervisory signals unless there is sufficient repetition of the alarm signal to prevent the loss of an alarm signal.	Chapter 1 on fundamentals requires that alarm signals take priority over supervisory signals unless there is sufficient repetition of the alarm signal to prevent the loss of an alarm signal.	If the communication methodology is shared with any other usage, all fire alarm transmissions must preempt and take precedence over any other usage. Fire alarm signals take precedence over supervisory signals.
Sharing communications equipment on premises	Not addressed	Disconnect outgoing or incoming telephone call and prevent its use for outgoing telephone calls until signal transmission has been completed.	Not addressed	Not addressed	Not addressed	Not addressed	Not addressed	If the transmitter is sharing on-premises communications equipment, the shared equipment must be listed for the purpose (otherwise the transmitter must be installed ahead of the unlisted equipment).

A.8.6.3.1.2 Where derived channels are used, normal operating conditions of the telephone equipment are not to inhibit or impair the successful transmission of signals. These normal conditions include, but are not limited to, the following:

(1) Intraoffice calls with a transponder on the originating end
(2) Intraoffice calls with a transponder on the terminating end
(3) Intraoffice calls with transponders on both ends
(4) Receipt and origination of long-distance calls
(5) Calls to announcement circuits
(6) Permanent signal receiver off-hook tone
(7) Ringing with no answer, with transponder on either the originating or the receiving end
(8) Calls to tone circuits (i.e., service tone, test tone, busy, or reorder)
(9) Simultaneous signal with voice source
(10) Simultaneous signal with data source
(11) Tip and ring reversal
(12) Cable identification equipment

A.8.6.3.1.5(2) Derived channel systems comprise Type 1 and Type 2 systems only.

A.8.6.3.1.7 The capacities of active multiplex systems are based on the overall reliability of the signal receiving, processing, display, and recording equipment at the supervising and subsidiary stations, and the capability to transmit signals during adverse conditions of the signal transmission facilities.

A.8.6.3.2.1.1 Special care should be used when connecting a DACT to a digital service such as DSL or ADSL. Filters or other special equipment might be needed to communicate reliably.

A.8.6.3.2.1.3 To give the DACT the ability to disconnect an incoming call to the protected premises, telephone service should be of the type that provides for timed-release disconnect. In some telephone systems (step-by-step offices), timed-release disconnect is not provided.

A.8.6.3.2.1.3(C) A DACT can be programmed to originate calls to the DACR telephone lines (numbers) in any alternating sequence. The sequence can consist of single or multiple calls to one DACR telephone line (number), followed by

Copyright National Fire Protection Association
Provided by IHS under license with NFPA
No reproduction or networking permitted without license from IHS
Not for Resale

single or multiple calls to a second DACR telephone line (number), or any combination thereof that is consistent with the minimum/maximum attempt requirements in 8.6.3.2.1.3(C).

A.8.6.3.2.1.4(A) With respect to the exception, a two-number ISDN line is not a substitute for the requirement to monitor the integrity of the path.

A.8.6.3.2.1.5(7) Because call forwarding requires equipment at a telephone company central office that could occasionally interrupt the call forwarding feature, a signal should be initiated whereby the integrity of the forwarded telephone line (number) that is being called by DACTs is verified every 4 hours. This can be accomplished by a single DACT, either in service or used solely for verification, that automatically initiates and completes a transmission sequence to its associated DACR every 4 hours. A successful signal transmission sequence of any other type within the same 4-hour period should be considered sufficient to fulfill this requirement.

Call forwarding should not be confused with WATS or 800 service. The latter, differentiated from the former by dialing the 800 prefix, is a dedicated service used mainly for its toll-free feature; all calls are preprogrammed to terminate at a fixed telephone line (number) or to a dedicated line.

A.8.6.3.2.2.2(A) The timed-release disconnect considerations as outlined in A.8.6.3.2.1.3 apply to the telephone lines (numbers) connected to a DACR at the supervising station.

It might be necessary to consult with appropriate telephone service personnel to ensure that numbers assigned to the DACR can be individually accessed even where they are connected in rotary (a hunt group).

A.8.6.3.2.2.2(C) In determining system loading, Table 8.6.3.2.2.2 can be used, or it should be demonstrated that there is a 90 percent probability of incoming line availability. Table 8.6.3.2.2.2 is based on an average distribution of calls and an average connected time of 30 seconds per message. Therefore, where it is proposed to use Table 8.6.3.2.2.2 to determine system loading, if any factors are disclosed that could extend DACR connect time so as to increase the average connect time, the alternate method of determining system loading should be used. Higher (or possibly lower) loadings might be appropriate in some applications.

(1) Some factors that could increase (or decrease) the capacity of a hunt group follow:
   (a) Shorter (or longer) average message transmission time can influence hunt group capacity.
   (b) The use of audio monitoring (listen-in) slow-scan video or other similar equipment can significantly increase the connected time for a signal and reduce effective hunt group capacity.
   (c) The clustering of active burglar alarm signals can generate high peak loads at certain hours.
   (d) Inappropriate scheduling of 24-hour test signals can generate excessive peak loads.

(2) Demonstration of a 90 percent probability of incoming line availability can be accomplished by the following in-service monitoring of line activity:
   (a) Incoming lines are assigned to telephone hunt groups. When a DACT calls the main number of a hunt group, it can connect to any currently available line in that hunt group.
   (b) The receiver continuously monitors the "available" status of each line. A line is available when it is waiting for an incoming call. A line is unavailable for any of the following reasons:
      i. Currently processing a call
      ii. Line in trouble
      iii. Audio monitoring (listen-in) in progress
      iv. Any other condition that makes the line input unable to accept calls
   (c) The receiver monitors the "available" status of the hunt group. A hunt group is available when any line in it is available.
   (d) A message is emitted by the receiver when a hunt group is unavailable for more than 1 minute out of 10 minutes. This message references the hunt group and the degree of overload.

A.8.6.3.2.2.2(F) The verification of the 24-hour DACR line test should be done early enough in the day to allow repairs to be made by the telephone company.

A.8.6.3.3.1.2 The recommended coded signal designations for a building having four floors and basements are provided in Table A.8.6.3.3.1.2.

Table A.8.6.3.3.1.2 Recommended Coded Signal Designations

Location	Coded Signal
Fourth floor	2–4
Third floor	2–3
Second floor	2–2
First floor	2–1
Basement	3–1
Sub-basement	3–2

A.8.6.3.3.1.4 The current readings, in accordance with 8.6.3.3.1.4(1), should be compared with the normal readings to determine whether a change in the circuit condition has occurred. A zero current reading in accordance with 8.6.3.3.1.4(2) indicates that the circuit is clear of a foreign ground.

A.8.6.3.3.2.7(3) Though rare, it is understood that the occurrence of a wire-to-wire short on the primary trunk facility near the supervising station could disable the transmission system without immediate detection.

A.8.6.3.3.2.8(4)(c) Though rare, it is understood that the occurrence of a wire-to-wire short on the primary trunk facility near the supervising station could disable the transmission system without immediate detection.

A.8.6.3.3.3.7 At the time of system acceptance, verification should be made that manual fire alarm box signals are free of transmission channel interference.

A.8.6.3.3.4 It is anticipated that McCulloh transmission technology will cease to be a viable option due to many factors, including unavailability of parts, unavailability of telephone facilities, and lack of technical support availability. This does not preclude the use, maintenance, or expansion of existing McCulloh systems.

Copyright National Fire Protection Association
Provided by IHS under license with NFPA
No reproduction or networking permitted without license from IHS
Not for Resale

A.8.6.3.4.4 The intent of the plurality of control sites is to safeguard against damage caused by lightning and to minimize the effect of interference on the receipt of signals. The control sites can be co-located.

A.8.6.3.5.2 It is intended that each RAT communicate with two or more independently located RARSRs. The location of such RARSRs should be such that they do not share common facilities.

NOTE: All probability calculations required for the purposes of Chapter 5 should be made in accordance with established communications procedures, should assume the maximum channel loading parameters specified, and should further assume that 25 RATs are actively in alarm and are being received by each RARSR.

A.8.6.3.6.2.3 If a single plant involves more than one gate entrance or involves a number of buildings, separate circuits might be required so that the alarm to the supervising station indicates the area to which the fire department is to be dispatched.

A.8.6.3.7.1 A private microwave radio can be used either as a transmission channel, to connect a transmitter to a supervising station or subsidiary station, or as a communications channel to connect a subsidiary station(s) to a supervising station(s). This can be done independently or in conjunction with wireline facilities.

A.8.6.3.7.2(4) Transmitters should be operated alternately, 16 hours on and 16 hours off.

A.8.6.4.11 Signals from hold-up alarms or other signals indicating life-threatening situations are permitted to take precedence over supervisory and trouble signals if acceptable to the authority having jurisdiction.

A.8.6.5.1 The signal information can be permitted to be provided in coded form. Records can be permitted to be used to interpret these codes.

A.8.6.5.2 In order to expedite repairs, it is recommended that spare modules, such as printed circuit boards, CRT displays, or printers, be stocked at the supervising station.

A.8.6.5.3 For all forms of transmission, the maximum time to process an alarm signal should be 90 seconds. The maximum time to process a supervisory signal should be 4 minutes. The time to process an alarm or supervisory signal is defined as that time measured from receipt of a signal until retransmission or subscriber contact is initiated.

When the level of traffic in a supervising station system reaches a magnitude such that delayed response is possible, even if the loading tables or loading formulas of this Code are not exceeded, it is envisioned that it will be necessary to employ an enhanced method of processing.

For example, in a system where a single DACR instrument provided with fire and burglar alarm service is connected to multiple telephone lines, it is conceivable that, during certain periods of the day, fire alarm signals could be delayed by the security signaling traffic, such as opening and closing signals. Such an enhanced system would perform as follows, upon receipt of a signal:

(1) Automatically process the signals, differentiating between those that require immediate response by supervising station personnel and those that need only be logged
(2) Automatically provide relevant subscriber information to assist supervising station personnel in their response
(3) Maintain a timed, unalterable log of the signals received and the response of supervising station personnel to such signals

A.9.2.1 When choosing from available options to implement a public fire alarm reporting system, the operating agency should consider which of the choices would facilitate the maximum reliability of the system, where such a choice is not cost prohibitive.

A.9.3.7.4.1(2) An example of an organization providing public fire alarm reporting system certification is the International Municipal Signal Association. Note that this reference is for information purposes only, information concerning the product or service has been provided by the manufacturer or other outside sources, and the information concerning the product or service has not been independently verified nor has the product or service been endorsed or certified by the NFPA or any of its technical committees.

A.9.4.1.4 If the operating mechanism of a box creates sufficient sound to be heard by the user, the requirements are satisfied.

A.9.4.2 Publicly accessible fire alarm boxes were commonly referred to as "street boxes" in previous editions of the Code. Applications of these boxes are no longer limited to street locations.

A.9.4.2.1.6 Where the intent is for complete coverage, it should not be necessary to travel in excess of one block or 150 m (500 ft) to reach a box. In residential areas, it should not be necessary to travel in excess of two blocks or 240 m (800 ft) to reach a box.

A.9.4.2.1.10 The current supply for designating lights at boxes should be secured at lamp locations from the local electric utility company.

Alternating-current power can be permitted to be superimposed on metallic fire alarm circuits for supplying designating lamps or for control or actuation of equipment devices for fire alarm or other emergency signals, provided the following conditions exist:

(1) Voltage between any wire and ground or between one wire and any other wire of the system does not exceed 150 volts, and the total resultant current in any line circuit does not exceed ¼ ampere.
(2) Components such as coupling capacitors, transformers, chokes, or coils are rated for 600 volt working voltage and have a breakdown voltage of at least twice the working voltage plus 1000 volts.
(3) There is no interference with fire alarm service under any conditions.

A.9.4.2.3.2 The transmission of an actual emergency-related message, initiated at the same time it is preselected for a test message, and, in turn, preempts said test message, must satisfy the intent of 9.4.2.3.2.

A.9.4.3.2.2.1(1) The local energy-type system *[see Figure A.9.4.3.2.2.1(1)(a) and Figure A.9.4.3.2.2.1(1)(b)]* is electrically isolated from the public fire alarm reporting system and has its own power supply. The tripping of the transmitting device does not depend on the current in the system. In a wired circuit, receipt of the alarm by the communications center when the circuit is accidentally opened depends on the design of the transmitting device and the associated communications center equipment (in other words, whether or not the system is designed to receive alarms through manual or automatic ground operational facilities). In a radio box-type system, receipt of the alarm by the communications center depends on the proper operation of the radio transmitting and receiving equipment.

Copyright National Fire Protection Association
Provided by IHS under license with NFPA
No reproduction or networking permitted without license from IHS
Not for Resale

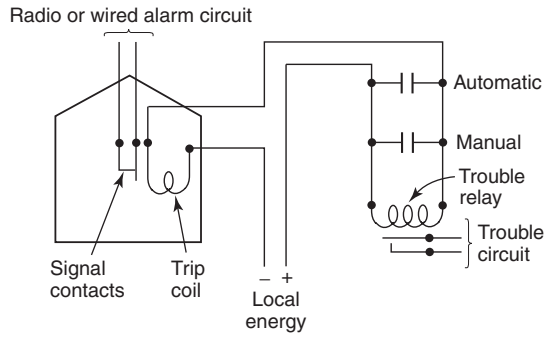

FIGURE A.9.4.3.2.2.1(1)(a) Local Energy-Type Auxiliary Fire Alarm System — Radio or Wired.

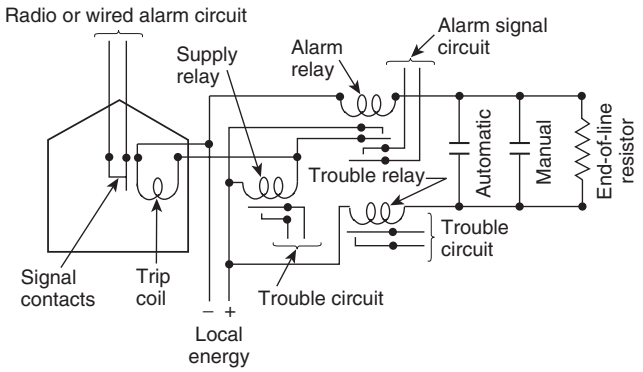

FIGURE A.9.4.3.2.2.1(1)(b) Local Energy-Type Auxiliary Fire Alarm System with Supply and Alarm Relay — Radio or Wired.

A.9.4.3.2.2.1(2) The shunt-type system *[see Figure A.9.4.3.2.2.1(2)(a) and Figure A.9.4.3.2.2.1(2)(b)]* is electrically connected to, and is an integral part of, the public fire alarm reporting system. A ground fault on the auxiliary circuit is a fault on the public fire alarm reporting system circuit, and an accidental opening of the auxiliary circuit sends a needless (or false) alarm to the communications center. An open circuit in the transmitting device trip coil is not indicated either at the protected property or at the communications center. Also, if an initiating device is operated, an alarm is not transmitted, but an open circuit indication is given at the communications center. If a public fire alarm reporting system circuit is open when a connected shunt-type system is operated, the transmitting device does not trip until the public fire alarm reporting system circuit returns to normal, at which time the alarm is transmitted, unless the auxiliary circuit is first returned to a normal condition.

Additional design restrictions for shunt-type systems are found in laws or ordinances.

A.9.4.3.2.2.1(2)(g) See Figure A.9.4.3.2.2.1(2)(b).

A.9.5.1.5.1(1) Figure A.9.5.1.5.1(1) illustrates a Form 4A arrangement.

A.9.5.1.5.1(2) Figure A.9.5.1.5.1(2) illustrates a Form 4B arrangement.

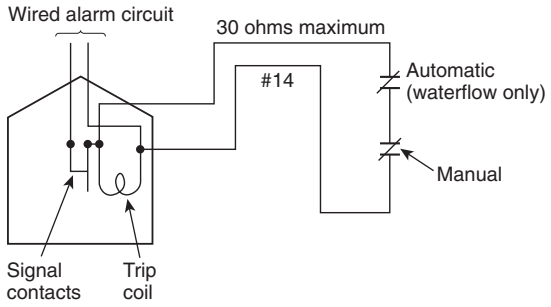

FIGURE A.9.4.3.2.2.1(2)(a) Shunt-Type Auxiliary Fire Alarm System (Permitted).

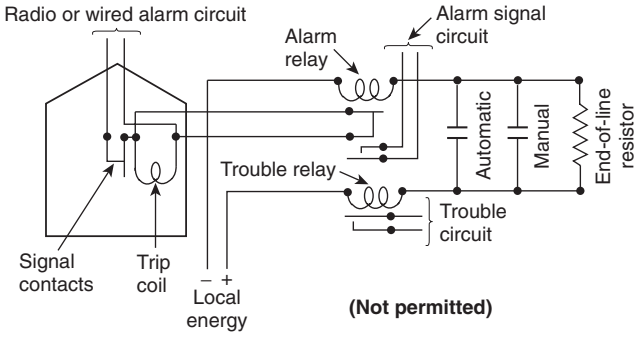

FIGURE A.9.4.3.2.2.1(2)(b) Shunt-Type Auxiliary Fire Alarm System (Not Permitted).

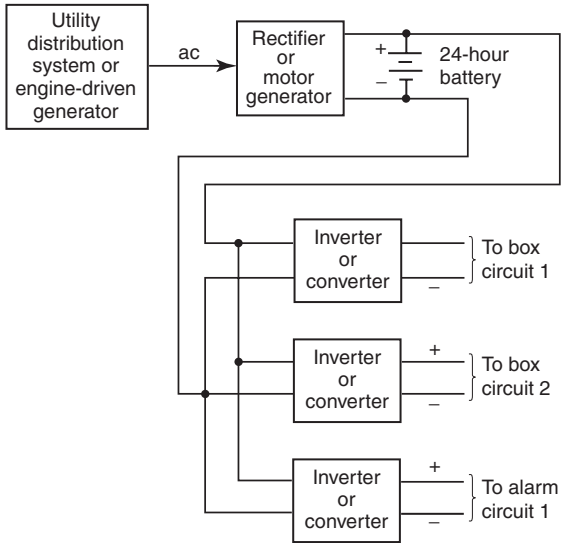

FIGURE A.9.5.1.5.1(1) Form 4A.

A.9.5.1.5.1(3) Figure A.9.5.1.5.1(3) illustrates a Form 4C arrangement. Refer to NFPA 1221, *Standard for the Installation, Maintenance, and Use of Emergency Services Communications Systems.*

A.9.5.3.1.1.1 Figure A.9.5.3.1.1.1 illustrates a Type A receiving network.

Copyright National Fire Protection Association
Provided by IHS under license with NFPA
No reproduction or networking permitted without license from IHS
Not for Resale

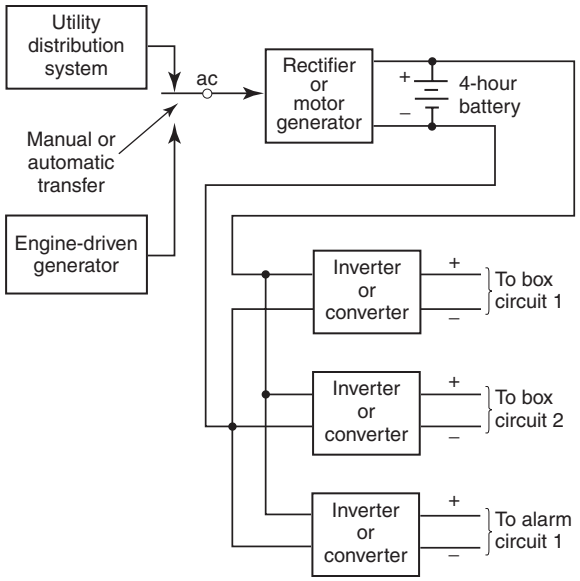

FIGURE A.9.5.1.5.1(2) Form 4B.

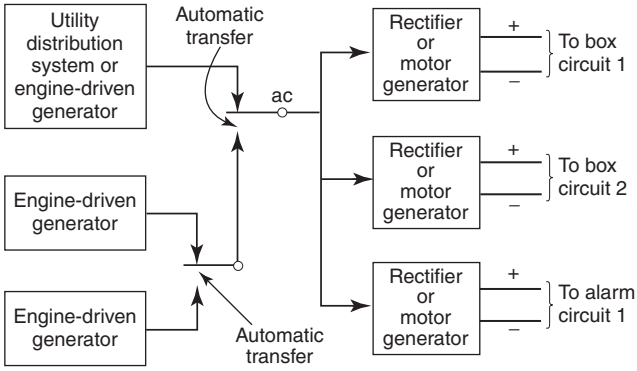

FIGURE A.9.5.1.5.1(3) Form 4C.

A.9.5.3.4.3 See A.9.4.2.3.2.

A.9.7.1.6.2 There may be environmental conditions that necessitate the use of rigid nonmetallic conduit.

A.9.7.3 All requirements for circuit protection do not apply to coded radio reporting systems. These systems do not use metallic circuits.

A.10.2.2.1 See definition of *Ownership* in 3.3.123.

A.10.2.2.5 Service personnel should be able to do the following:

(1) Understand the requirements contained in the *National Fire Alarm Code* and the fire alarm requirements contained in the *National Electrical Code*
(2) Understand basic job site safety laws and requirements
(3) Apply troubleshooting techniques, and determine the cause of fire alarm system trouble conditions
(4) Understand equipment specific requirements, such as programming, application, and compatibility

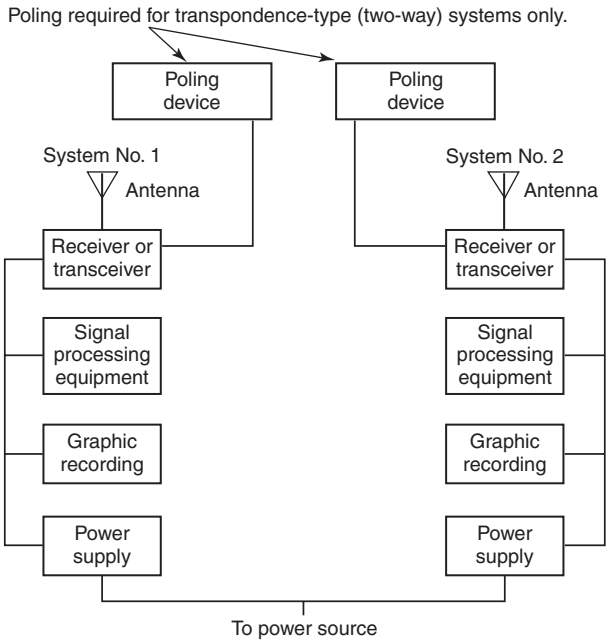

FIGURE A.9.5.3.1.1.1 Type A System Receiving Networks.

(5) Read and interpret fire alarm system design documentation and manufacturer's inspection, testing, and maintenance guidelines
(6) Properly use tools and test equipment required for testing and maintenance of fire alarm systems and their components
(7) Properly apply the test methods required by the *National Fire Alarm Code*

A.10.2.2.5.1(1) Factory training and certification is intended to allow an individual to service equipment only for which he or she has specific brand and model training.

A.10.2.2.5.1(2) Nationally recognized fire alarm certification programs might include those programs offered by the International Municipal Signal Association (IMSA) and National Institute for Certification in Engineering Technologies (NICET). NOTE: These organizations and the products or services offered by them have not been independently verified by the NFPA, nor have the products or services been endorsed or certified by the NFPA or any of its technical committees.

A.10.2.2.5.1(3) Licenses and certifications offered at a state or local level are intended to recognize those individuals who have demonstrated a minimum level of technical competency in the area of fire alarm servicing.

A.10.2.3 Prior to any scheduled inspection or testing, the service company should consult with the building owner or the owner's designated representative. Issues of advance notification in certain occupancies, including advance notification time, building posting, systems interruption and restoration, evacuation procedures, accommodation for evacuees, and other related issues, should be agreed upon by all parties prior to any inspection or testing.

Copyright National Fire Protection Association
Provided by IHS under license with NFPA
No reproduction or networking permitted without license from IHS
Not for Resale

A.10.2.6.1 As an example, testing of the elevator fire service and shutdown functions will usually require a coordinated multi-discipline effort with presence of qualified service personnel for the fire alarm system, the elevator system, and other building systems. The presence of inspection authorities might also be needed in some jurisdictions. The development of a test plan should be considered to ensure that the testing of these features is accomplished in a coordinated and timely manner. This plan should also ensure that all appropriate parties and personnel are present when needed, and that the testing requirements for both the fire alarm system and the elevator system are fulfilled. See 6.16.3 and 6.16.4 for specific elevator fire safety functions.

A.10.3.1 Equipment performance can be affected by building modifications, occupancy changes, changes in environmental conditions, device location, physical obstructions, device orientation, physical damage, improper installation, degree of cleanliness, or other obvious problems that might not be indicated through electrical supervision.

The intent of 10.3.1 is to prevent an inspection being made at intervals exceeding those allowed by Table 10.3.1. Annual inspections should be made every 12 months; monthly inspections should be made every 30 days, and so forth. For example, it is not acceptable to conduct an annual inspection in January of year one, and December of year two (23 month frequency) just because Table 10.3.1 requires an inspection once each year.

A.10.4.1.2 Reacceptance testing is performed to verify the proper operation of added or replaced devices, appliances, fire safety control function devices, control equipment, and so forth. It is not the intent of the committee to unduly burden the owner with increased costs for repeated testing of devices not directly affected by the replacement of devices with like devices.

For example, if a 2 amp fuse is replaced with another 2 amp fuse in the fire alarm control unit, verification of the circuit(s) served by the fused supply is required, but it would not be necessary to test 10 percent of initiating devices not directly affected by replacing the fuse. Likewise, it is not necessary to test all these initiating devices whenever a smoke detector is replaced with a like smoke detector.

When wiring changes are made to correct improperly supervised circuits, a test of the affected device or appliance is required, but not a test of 10 percent of initiating devices not directly affected.

A.10.4.2.1 If the authority having jurisdiction strongly suspects significant deterioration or otherwise improper operation by a central station, a surprise inspection to test the operation of the central station should be made, but extreme caution should be exercised. This test is to be conducted without advising the central station. However, the public fire service communications center must be contacted when manual alarms, waterflow alarms, or automatic fire detection systems are tested so that the fire department will not respond. In addition, persons normally receiving calls for supervisory alarms should be notified when items such as gate valves and functions such as pump power are tested. Confirmation of the authenticity of the test procedure should be obtained and should be a matter for resolution between plant management and the central station.

A.10.4.2.2 Refer to Annex C for wiring diagrams and guidance on testing various styles of fire alarm circuits.

A.10.4.4 It is suggested that the annual test be conducted in segments so that all devices are tested annually.

The intent of 10.4.4 is to prevent a test from being made at intervals exceeding those allowed by Table 10.4.4. Annual tests should be made every 12 months; monthly tests should be made every 30 days, and so forth. For example, it is not acceptable to conduct an annual test in January of year one, and December of year two (23-month frequency) just because Table 10.4.4 requires a test once each year.

A.10.4.4.2 Detectors that cause unwanted alarms should be tested at their lower listed range (or at 0.5 percent obscuration if unmarked or unknown). Detectors that activate at less than this level should be replaced.

A.10.4.4.5 The addressable term was determined by the Technical Committee in Formal Interpretation 79-8 on NFPA 72D and Formal Interpretation 87-1 on NFPA 72A.

A.10.4.11 In-building emergency radio communication systems where the ac power source is monitored for integrity should be tested annually. Systems where the ac power source is not monitored for integrity should be tested quarterly.

A.10.6.1 For final determination of record retention, see 10.4.4.2 for sensitivity options.

A.10.6.1.2 With many software-based fire systems, a copy of the site-specific software is required to restore system operation if a catastrophic system failure should occur. Without a back-up copy readily available on site, recovery of system operation by authorized service personnel can be substantially delayed.

The intent of this requirement is to provide authorized service personnel with an on-site copy of the site-specific software. The on-site copy should provide a means to recover the last installed and tested version of the site-specific operation of the system. This typically would be an electronic copy of the source files required to load an external programming device with the site-specific data. This requirement does not extend to the system executive software, nor does it require that the external programmer software if required be stored on site.

It is intended that this copy of the software be an electronic version stored on a non-rewritable media containing all of the file(s) or data necessary to restore the system and not just a printed version of the operation stored on electronic media. One example of a non-rewritable media is a CD-R.

A.10.6.2.3 Figure A.10.6.2.3 provides an example of a filled-out Inspection and Testing Form.

A.10.6.2.3(9) One method used to define the required sequence of operations and to document the actual sequence of operations is an input/output matrix. *[See Figure A.10.6.2.3(9).]*

A.11.1.1 Chapter 11 does not attempt to cover all equipment, methods, and requirements that might be necessary or advantageous for the protection of lives and property from fire.

NFPA 72 is a "minimum code." This chapter provides a number of requirements related to single- and multiple-station alarms and household fire alarm systems that are deemed to be the practical and necessary minimum for average conditions at the present state of the art.

Copyright National Fire Protection Association
Provided by IHS under license with NFPA
No reproduction or networking permitted without license from IHS
Not for Resale

INSPECTION AND TESTING FORM

DATE: July 4, 2006

TIME: 2:30 pm

SERVICE ORGANIZATION

Name: ABC Fire Service Co.
Address: 5678 Testing Ave., Anytown, FL 00000
Representative: Benjamin Franklin
License No.: F12345
Telephone: 444/444-4444

PROPERTY NAME (USER)

Name: Buy American, Inc.
Address: 1776 Freedom Lane, Anytown, FL
Owner Contact: George Washington
Telephone: 666/666-6666

MONITORING ENTITY

Contact: Abraham Lincoln, Monitoring Co., Inc.
Telephone: 987/654-3210
Monitoring Account Ref. No.: A103

APPROVING AGENCY

Contact: Fred Firestop, Fire Chief, Anytown FD
Telephone: 888/888-8888

TYPE TRANSMISSION

- ❑ McCulloh
- ❑ Multiplex
- ☒ Digital
- ❑ Reverse Priority
- ❑ RF
- ❑ Other (Specify) _____

SERVICE

- ❑ Weekly
- ❑ Monthly
- ❑ Quarterly
- ❑ Semiannually
- ❑ Annually
- ☒ Other (Specify) Initial Acceptance Inspection & Test

Control Unit Manufacturer: Alarm MFG Co.
Model No.: F301
Circuit Styles: 4 (SLC)
Number of Circuits: 3 SLC, 4 NAC
Software Rev.: X 2.3.4.5.6.7.8
Last Date System Had Any Service Performed: —
Last Date That Any Software or Configuration Was Revised: January 1, 2006

SAMPLE

ALARM-INITIATING DEVICES AND CIRCUIT INFORMATION

Quantity of Devices Installed	Circuit Style	Quantity of Devices Tested	
22	4	22	Manual Fire Alarm Boxes
0		0	Ion Detectors
42		42	Photo Detectors
16		16	Duct Detectors
8		8	Heat Detectors
2		2	Waterflow Switches
	See next page		Supervisory Switches
0		0	Other (Specify): _____

Alarm verification feature is disabled X enabled _____.

© 2007 National Fire Protection Association

FIGURE A.10.6.2.3 Example of a Filled-Out Inspection and Testing Form.

Copyright National Fire Protection Association
Provided by IHS under license with NFPA
No reproduction or networking permitted without license from IHS
Not for Resale

ALARM NOTIFICATION APPLIANCES AND CIRCUIT INFORMATION

Quantity of Appliances Installed	Circuit Style	Quantity of Appliances Tested	
0			Bells
14	(Class B)	14	Horns with strobes
0			Chimes
6		6	Strobes
0			Speakers
			Other (Specify):

No. of alarm notification appliance circuits: 4

Are circuits monitored for integrity? ☒ Yes ❑ No

SUPERVISORY SIGNAL-INITIATING DEVICES AND CIRCUIT INFORMATION

Quantity of Devices Installed	Circuit Style	Quantity of Devices Tested	
0			Building Temp.
0			Site Water Temp.
0			Site Water Level
0			Fire Pump Power
1	4	1	Fire Pump Running
1	4	1	Fire Pump Auto Position
1	4	1	Fire Pump or Pump Controller Trouble
1	4	1	Fire Pump ~~Running~~ Low Fuel
1	4	1	Generator in Auto Position
1	4	1	Generator or Controller Trouble
0			Switch Transfer
1	4	1	Generator Engine Running
1	4	1	Other: Generator low fuel
4	4	4	Valve position

SIGNALING LINE CIRCUITS

Quantity and style of signaling line circuits connected to system *(see NFPA 72, Table 6.6.1)*:

Quantity 3 Style(s) 4

SYSTEM POWER SUPPLIES

(a) Primary (Main): Nominal Voltage 120 VAC Amps 8.5

Overcurrent Protection: Type Circuit Breaker Amps 20

Location (of Primary Supply Panelboard): Electric Room 103, Panel EP-2

Disconnecting Means Location: Electric Room, Panel EP-2

(b) Secondary (Standby):

Generator & Battery Storage Battery: Amp-Hr Rating 12 (Battery)

Calculated capacity in 5.5 Amp-Hrs to operate system for 24 hours

Engine-driven generator dedicated to fire alarm system: Basement Generator Room

Location of fuel storage: Adjacent to Generator Room

TYPE BATTERY

❑ Dry Cell ❑ Lead-Acid

❑ Nickel-Cadmium ❑ Other (Specify):

☒ Sealed Lead-Acid

(c) Emergency or standby system used as a backup to primary power supply, instead of using a secondary power supply:

X Emergency system described in NFPA 70, Article 700

____ Legally required standby described in NFPA 70, Article 701

____ Optional standby system described in NFPA 70, Article 702, which also meets the performance requirements of Article 700 or 701

SAMPLE

© 2007 National Fire Protection Association

FIGURE A.10.6.2.3 ***Continued***

Copyright National Fire Protection Association
Provided by IHS under license with NFPA
No reproduction or networking permitted without license from IHS
Not for Resale

PRIOR TO ANY TESTING

NOTIFICATIONS ARE MADE	Yes	No	Who	Time
Monitoring Entity	☒	☐	Operator 115	8:15 AM
Building Occupants	☒	☐		
Building Management	☒	☐		
Other (Specify)	☐	☐		
AHJ Notified of Any Impairments	☐	☒		

SYSTEM TESTS AND INSPECTIONS

TYPE	Visual	Functional	Comments
Control Unit	☒	☒	
Interface Equipment	☒	☒	
Lamps/LEDs	☒	☐	
Fuses	☒	☐	
Primary Power Supply	☒	☐	
Trouble Signals	☒	☒	
Disconnect Switches	☒	☐	
Ground-Fault Monitoring	☒	☐	Tested OK

SECONDARY POWER

TYPE	Visual	Functional	Comments
Battery Condition	☒		
Load Voltage		☒	26.2 VDC
Discharge Test		☒	Simulated
Charger Test		☐	
Specific Gravity		☐	
TRANSIENT SUPPRESSORS	☒		
REMOTE ANNUNCIATORS	☒	☒	
NOTIFICATION APPLIANCES			
Audible	☒	☒	Low in Conference Room 2
Visible	☒	☒	
Speakers	☐	☐	
Voice Clarity		☐	

SAMPLE

INITIATING AND SUPERVISORY DEVICE TESTS AND INSPECTIONS

Loc. & S/N	Device Type	Visual Check	Functional Test	Factory Setting	Measured Setting	Pass	Fail
1st Fl E	Main box	☒	☒			☒	☐
Corr NR 103	SD	☒	☒	3.2	3.1	☒	☐
Corr NR 105	SD	☒	☒	3.2	3.2	☒	☐
Corr NR 107	SD	☒	☒	3.2	3.1	☒	☐
E Stairs	WF	☒	☒			☒	☐
E Stairs	Tamper	☒	☒			☒	☐

Comments: Additional inspection and test sheets attached

© 2007 National Fire Protection Association *NFPA 72* (p. 3 of 4)

FIGURE A.10.6.2.3 ***Continued***

Copyright National Fire Protection Association
Provided by IHS under license with NFPA
No reproduction or networking permitted without license from IHS
Not for Resale

EMERGENCY COMMUNICATIONS EQUIPMENT	Visual	Functional	Comments
Phone Set	☒	☒	
Phone Jacks	☒	☒	
Off-Hook Indicator	☐	☐	
Amplifier(s)	☐	☐	
Tone Generator(s)	☐	☐	
Call-in Signal	☐	☐	
System Performance	☐	☐	

COMBINATION SYSTEMS	Visual	Device Operation	Simulated Operation
Fire Extinguisher Monitoring Device/System	☒	☒	☐
Carbon Monoxide Detector/System	☒	☒	☐
(Specify) _____	☐	☐	☐
INTERFACE EQUIPMENT			
(Specify) *AHU #1 shutdown*	☒	☒	☐
(Specify) *Elevator recall*	☒	☒	☐
(Specify) *Elevator fire hat*	☒	☒	☐
SPECIAL HAZARD SYSTEMS			
(Specify) _____	☐	☐	☐
(Specify) _____	☐	☐	☐
(Specify) _____	☐	☐	☐

Special Procedures: _____

Comments: _____

SAMPLE

SUPERVISING STATION MONITORING	Yes	No	Time	Comments
Alarm Signal	☒	☐	*9:45 AM*	*OK*
Alarm Restoration	☒	☐		*OK*
Trouble Signal	☒	☐		*OK*
Trouble Signal Restoration	☒	☐		*OK*
Supervisory Signal	☒	☐		*OK*
Supervisory Restoration	☒	☐		*OK*

NOTIFICATIONS THAT TESTING IS COMPLETE	Yes	No	Who	Time
Building Management	☒	☐	*Bldg. manager*	*2:15*
Monitoring Agency	☒	☐	*Operator 97*	*2:15*
Building Occupants	☒	☐		
Other (Specify)	☐	☐		

The following did not operate correctly: *Audibility low in Conference Room 2. Corrected by installer and retested OK.*

System restored to normal operation: Date: *July 4, 2006* Time: *2:15*

THIS TESTING WAS PERFORMED IN ACCORDANCE WITH APPLICABLE NFPA STANDARDS.

Name of Inspector: *Benjamin Franklin* Date: *July 4, 2006* Time: *2:30*

Signature: _____

Name of Owner or Representative: *George Washington* Date: *July 4, 2006* Time: *2:35*

Signature: _____

© 2007 National Fire Protection Association *NFPA 72* (p. 4 of 4)

FIGURE A.10.6.2.3 ***Continued***

Copyright National Fire Protection Association
Provided by IHS under license with NFPA
No reproduction or networking permitted without license from IHS
Not for Resale

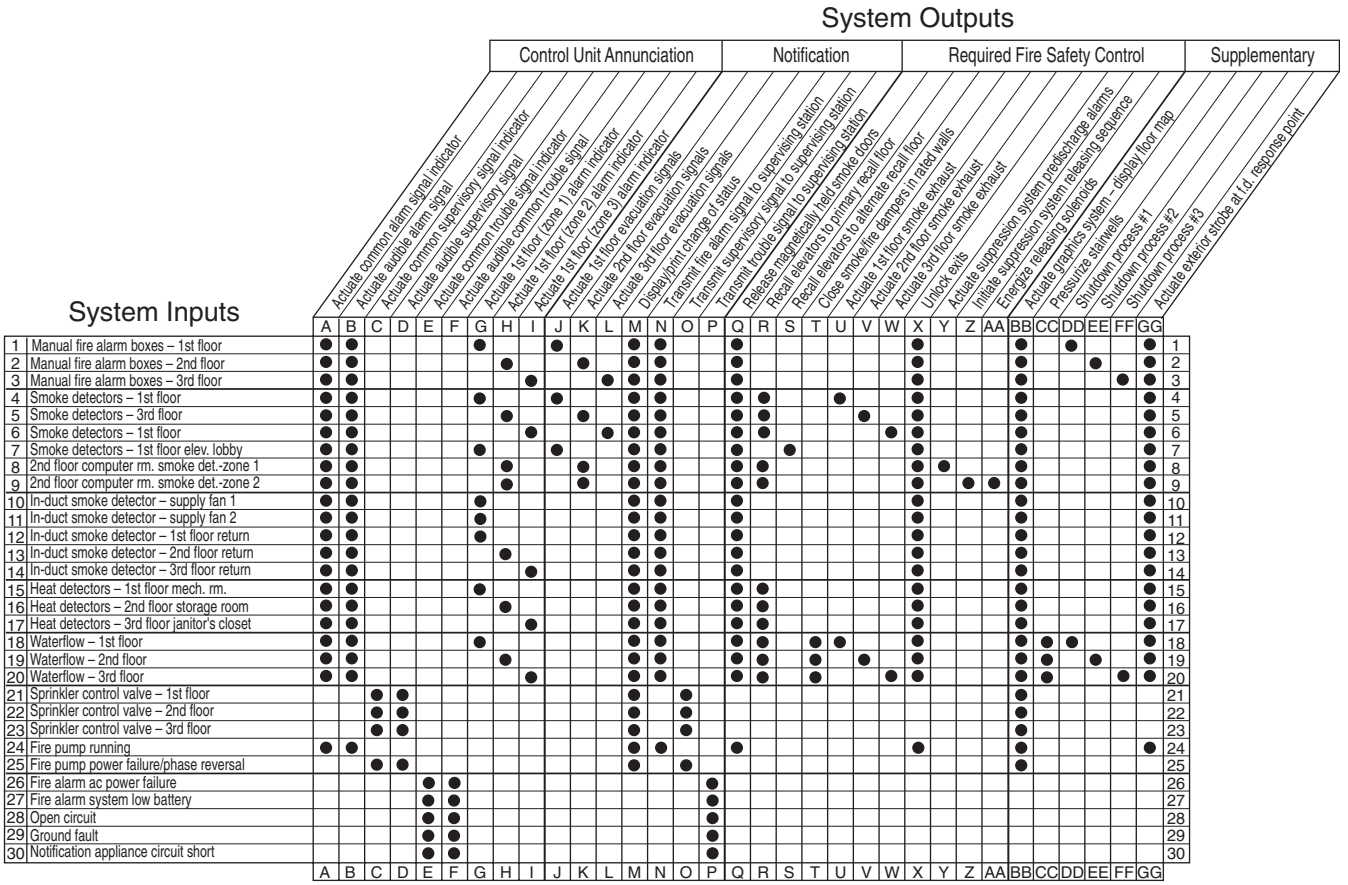

FIGURE A.10.6.2.3(9) Typical Input/Output Matrix.

A.11.1.2 An example of the applicable code within the NFPA set of codes and standards is NFPA *101, Life Safety Code*. Other codes such as local building codes are other examples to be considered.

The requirements of Chapter 11 are intended to apply to installations in the following new and existing locations:

(1) One- and two-family dwelling units
(2) Sleeping rooms of lodging and rooming houses
(3) Individual dwelling units of apartment buildings
(4) Guest rooms, sleeping rooms, and living areas within guest suites of hotels and dormitories
(5) Day-care homes
(6) Residential board and care facilities
(7) Other locations where applicable laws codes or standards specify a requirement for the installation of smoke alarms

A.11.1.4 Installations in manufactured homes are under the jurisdiction of Housing and Urban Development (HUD). The rules for installation are addressed in the Federal Manufactured Housing Construction Safety Standards.

A.11.2 *Fire Danger in the Home.* In 1998, fire was the third leading cause of unintentional injury deaths in the home, and the fifth leading cause of unintentional injury deaths overall. (*Injury Facts*, 1999 edition, by National Safety Council)

Eighty-two (81.8) percent of the fire fatalities in 1999 resulted from residential fires — 66.5 percent resulted from fires in one- and two-family dwellings, including manufactured homes, 14.6 percent were caused by apartment fires, and 0.7 percent resulted from fires in other residential occupancies. ("Fire Loss in the United States during 1999," by Michael J. Karter)

Half of the home (dwellings and apartments) fire fatalities resulted from fires that started between 10:00 p.m. and 8:00 a.m., the common sleeping hours. ("The U.S. Fire Problem Overview Report," by Marty Ahrens)

Three-quarters of all reported fire injuries occurred in the home, with more than one-half in one- and two-family dwellings (including manufactured housing), and one-fifth in apartments. ("Fire Loss in the United States during 1999," by Michael J. Karter)

It is estimated that each household will experience three (usually unreported) fires per decade and two fires serious enough to report to a fire department per lifetime. ("A Few Fire Facts at the Household Level," by NFPA's Fire Analysis Division, *Fire Journal*, May 1986)

Fire Safety in the Home. NFPA 72 is intended to provide reasonable fire safety for persons in family living units. Reasonable fire safety can be produced through the following three-point program:

(1) Minimizing fire hazards
(2) Providing a fire-warning equipment
(3) Having and practicing an escape plan

Copyright National Fire Protection Association
Provided by IHS under license with NFPA
No reproduction or networking permitted without license from IHS
Not for Resale

Minimizing Fire Hazards. This Code cannot protect all persons at all times. For instance, the application of this Code might not provide protection against the following three traditional fatal fire scenarios:

(1) Smoking in bed
(2) Leaving children home alone
(3) Cleaning with flammable liquids such as gasoline

However, Chapter 11 can lead to reasonable safety from fire when the three-point program is observed.

Fire-Warning Equipment. There are two types of fire to which household fire-warning equipment needs to respond. One is a rapidly developing, high-heat fire. The other is a slow, smoldering fire. Either can produce smoke and toxic gases.

Household fires are especially dangerous at night when the occupants are asleep. Fires produce smoke and deadly gases that can overcome occupants while they are asleep. Furthermore, dense smoke reduces visibility. Most fire casualties are victims of smoke and gas inhalation rather than burns. To warn against a fire, Chapter 11 provides for smoke detectors (alarms) requirements in accordance with 11.5.1 and the associated annex recommends heat or smoke alarms or smoke detectors (alarms) in all other major areas.

A.11.3.3 This Code establishes minimum standards for the use of fire-warning equipment. The use of additional alarms or detectors over and above the minimum standard is encouraged. The use of additional devices can result in a combination of equipment (e.g., a combination of single- and multiple-station alarms or a combination of smoke alarms or smoke detectors that are part of a security/fire system and existing multiple-station alarms). Though a combination is allowed, one type of equipment must independently meet the requirements of the Code. Compliance with the requirements of the Code cannot rely on the combination of the following fire-warning equipment:

(1) Single-station alarms
(2) Multiple-station alarms
(3) Household fire alarm system (includes a security/fire system with smoke alarms or smoke detectors)

It is encouraged that the highest level of protection be used where possible. For example, if multiple-station alarms are added to an occupancy with compliant single-station alarms, the multiple-station alarms should be installed to replace all of the single-station alarms. Similarly, if a monitored household fire alarm system is added to a house that has compliant multiple-station alarms, monitored smoke alarms or smoke detectors should be installed to replace the multiple-station alarms or be installed to provide the same required coverage.

A.11.3.5 The use of the distinctive three-pulse temporal pattern fire alarm evacuation signal has been recommended by this Code since 1979. It has since been adopted as both an American National Standard (ANSI S3.41, *American National Standard Audible Emergency Evacuation Signal*) and an International Standard (ISO 8201, *Audible Emergency Evacuation Signal*).

Copies of both of these standards are available from either of the following:

(1) The web at asa.aip.org/map_standards.html
(2) Standards Publication Fulfillment, P.O. Box 1020, Sewickly, PA 15143-9998, Tel. 412-741-1979

For information about the Acoustical Society of America, or for how and why the three-pulse temporal pattern signal was chosen as the international standard evacuation signal, contact Standards Secretariat, Acoustical Society of America, 120 Wall Street, New York, NY 10005-3993, Tel. 212-248-0373.

The standard fire alarm evacuation signal is a three-pulse temporal pattern using any appropriate sound. The pattern consists of the following in this order:

(1) An "on" phase lasting 0.5 second ±10 percent.
(2) An "off" phase lasting 0.5 second ±10 percent for three successive "on" periods.
(3) An "off" phase lasting 1.5 seconds ±10 percent *[see Figure A.11.3.5(a) and Figure A.11.3.5(b)]*. The signal should be repeated for a period appropriate for the purposes of evacuation of the building, but for not less than 180 seconds. A single-stroke bell or chime sounded at "on" intervals lasting 1 second ±10 percent, with a 2-second ±10 percent "off" interval after each third "on" stroke, is permitted *[see Figure A.11.3.5(c)]*.

The minimum repetition time is permitted to be manually interrupted.

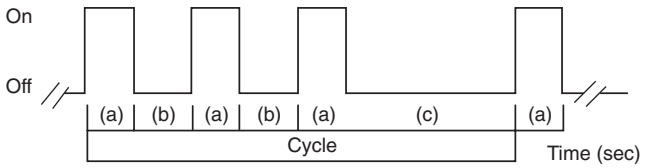

Key:
Phase (a) signal is on for 0.5 sec ±10%
Phase (b) signal is off for 0.5 sec ±10%
Phase (c) signal is off for 1.5 sec ±10% [(c) = (a) + 2(b)]
Total cycle lasts for 4 sec ±10%

FIGURE A.11.3.5(a) Temporal Pattern Parameters.

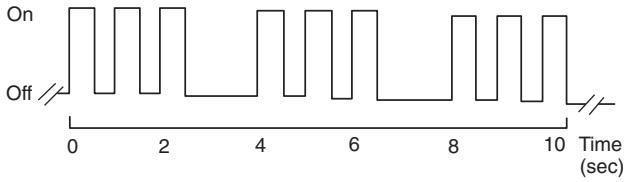

FIGURE A.11.3.5(b) Temporal Pattern Imposed on Signaling Appliances That Emit a Continuous Signal While Energized.

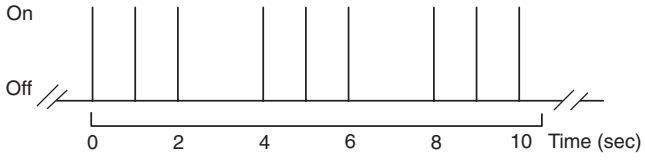

FIGURE A.11.3.5(c) Temporal Pattern Imposed on a Single-Stroke Bell or Chime.

A.11.3.5.2 It is recommended that the voice notification message be intelligible, audible, and appropriate for the hazard. Care should be taken to avoid excessive silence during the message. Figure A.11.3.5.2(a) through Figure A.11.3.5.2(c) provide examples of acceptable combinations of the emergency evacuation signal and voice messages.

Copyright National Fire Protection Association
Provided by IHS under license with NFPA
No reproduction or networking permitted without license from IHS
Not for Resale

Alarm initiation — eight T3 cycles minimum.								Two T3 cycles minimum — repeat as desired.		
T3 cycle	T3 cycle	T3 cycle	T3 cycle	T3 cycle	T3 cycle	T3 cycle	T3 cycle	Voice — 10-sec maximum	T3 cycle	T3 cycle
(1)	(2)	(3)	(4)	(5)	(6)	(7)	(8)		(1)	(2)

FIGURE A.11.3.5.2(a) Temporal Pattern Parameters with 10-Second Voice Allowance.

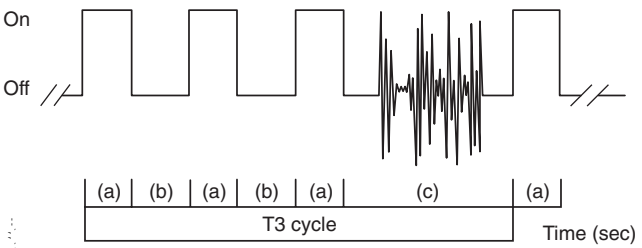

Key:
Phase (a) signal is on for 0.5 sec ±10%
Phase (b) signal is off for 0.5 sec ±10%
Phase (c) signal is off for 1.5 sec ±10% [(c) = (a) + 2(b)]
Phase (c) signal can incorporate voice notification.
Total cycle lasts for 4 sec ±10%

FIGURE A.11.3.5.2(b) Temporal Pattern Parameters with 1.5-Second Voice Allowance.

A.11.3.8 Additional notification devices are recommended for the deaf and hard of hearing. These devices include, but are not limited to, supplemental tactile notification devices. These devices should initiate in response to the activation of fire-warning equipment.

A.11.4 Fire-warning equipment for residential occupancies are capable of protecting about half of the occupants in potentially fatal fires. Victims are often intimate with the fire, too old or too young, or physically or mentally impaired such that they cannot escape even when warned early enough that escape should be possible. For these people, other strategies such as protection-in-place or assisted escape or rescue would be necessary.

Family Escape Plan. There often is very little time between the detection of a fire and the time it becomes deadly. This interval can be as little as 1 or 2 minutes. Thus, this Code requires detection means to give a family some advance warning of the development of conditions that become dangerous to life within a short period of time. Such warning, however, could be wasted unless the family has planned in advance for rapid exit from their residence. Therefore, in addition to the fire-warning equipment, this Code requires exit plan information to be furnished.

Planning and practicing for fire conditions with a focus on rapid exit from the residence are important. Drills should be held so that all family members know the action to be taken. Each person should plan for the possibility that exit out of a bedroom window could be necessary. An exit out of the residence without the need to open a bedroom door is essential.

Special Provisions for the Disabled. For special circumstances where the life safety of an occupant(s) depends on prompt rescue by others, the fire-warning equipment should include means of prompt automatic notification to those who are to be depended on for rescue.

A.11.4.3 Assumptions — Equipment is as follows:

(1) Maintenance. Good fire protection requires that the equipment be maintained periodically. If the owner or responsible party is unable to perform the required maintenance, a maintenance agreement should be considered.
(2) Reliability of fire alarm systems. Fire alarm systems located in dwelling units and having all of the following features are considered to have a functional reliability of 95 percent:
   (a) Utilizes a control unit
   (b) Has at least two independent sources of operating power
   (c) Monitors all initiating and notification circuits for integrity
   (d) Transmits alarm signals to a constantly attended, remote monitoring location
   (e) Is tested regularly by the homeowner and at least every 3 years by a qualified service technician
(3) Reliability of fire alarm systems without remote monitoring or with wireless transmission. Fire alarm systems for dwelling units with all of the preceding features except (d) or systems that use low-power wireless transmission from initiating devices within the dwelling units are considered to have a functional reliability of 90 percent.
(4) Reliability of other systems. Fire alarm systems for dwelling units comprised of interconnected smoke alarms where the interconnecting means is monitored for integrity are considered to have a functional reliability of 88 percent. If the interconnecting means is not supervised or the alarms are not interconnected, such systems are considered to have a functional reliability of 85 percent.

A.11.5.1 Experience has shown that all hostile fires in dwelling units generate smoke to some degree. This is also true with respect to heat buildup from fires. However, the results of full-scale experiments conducted over the past several years in the United States, using typical fires in dwelling units, indicate

Alarm initiation — eight T3 cycles minimum. Optional voice allowed in any T3 cycle.								Two T3 cycles minimum — repeat as desired.		
T3 cycle with voice	T3 cycle with voice	T3 cycle with voice	T3 cycle with voice	T3 cycle with voice	T3 cycle with voice	T3 cycle with voice	T3 cycle with voice	Voice — 10-sec maximum	T3 cycle with voice	T3 cycle with voice
(1)	(2)	(3)	(4)	(5)	(6)	(7)	(8)		(1)	(2)

FIGURE A.11.3.5.2(c) Temporal Pattern Parameters with 10-Second Voice Allowance.

Copyright National Fire Protection Association
Provided by IHS under license with NFPA
No reproduction or networking permitted without license from IHS
Not for Resale

that detectable quantities of smoke precede detectable levels of heat in nearly all cases. In addition, slowly developing, smoldering fires can produce smoke and toxic gases without a significant increase in the room's temperature. Again, the results of experiments indicate that detectable quantities of smoke precede the development of hazardous thermal atmospheres in nearly all cases.

For the preceding reasons, the required protection in this Code utilizes smoke alarms as the primary life safety equipment for providing a reasonable level of protection against fire.

The installation of additional alarms of either the smoke or heat type should result in a higher degree of protection. Adding alarms to rooms that are normally closed off from the required alarms increases the escape time because the fire does not need to build to the higher level necessary to force smoke out of the closed room to the required alarms. As a consequence, it is recommended that the householder consider the installation of additional fire protection devices. However, it should be understood that Chapter 11 does not require additional smoke alarms over and above those called for in 11.5.1. Refer to Figure A.11.5.1(a) through Figure A.11.5.1(d) where required smoke alarms are shown.

Where to Locate the Required Smoke Alarms. The major threat from fire in a dwelling unit occurs at night when everyone is asleep. Persons in sleeping areas can be threatened by fires in the remainder of the unit; therefore, smoke alarms are best located in each bedroom and between the bedroom areas and the rest of the unit as shown in Figure A.11.5.1(b). In dwelling units with more than one bedroom area or with bedrooms on more than one floor, more than one smoke alarm is required, as shown in Figure A.11.5.1(c).

In addition to smoke alarms outside of the sleeping areas and in each bedroom, Chapter 11 requires the installation of a smoke alarm on each additional level of the dwelling unit, including the basement. These installations are shown in Figure A.11.5.1(d). The living area smoke alarm should be installed in the living room or near the stairway to the upper level, or in both locations. The basement smoke alarm should be installed in close proximity to the stairway leading to the floor above. Where installed on an open-joisted ceiling, the smoke alarm should be placed on the bottom of the joists. The smoke alarm should be positioned relative to the stairway so as to intercept smoke coming from a fire in the basement before the smoke enters the stairway.

Are More Smoke Alarms Desirable? The required number of smoke alarms might not provide reliable early warning protection for those areas separated by a door from the areas protected by the required smoke alarms. For this reason, the use of additional smoke alarms for those areas for increased protection is recommended. The additional areas include the basement, bedrooms, dining room, furnace room, utility room, and hallways not protected by the required smoke alarms. The installation of smoke alarms in kitchens, attics (finished or unfinished), or garages is not normally recommended, because these locations occasionally experience conditions that can result in improper operation.

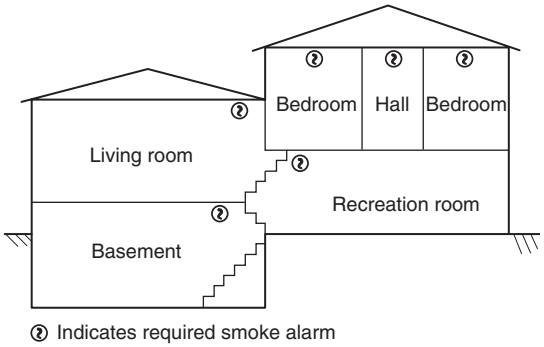

FIGURE A.11.5.1(a) Split Level Arrangement.

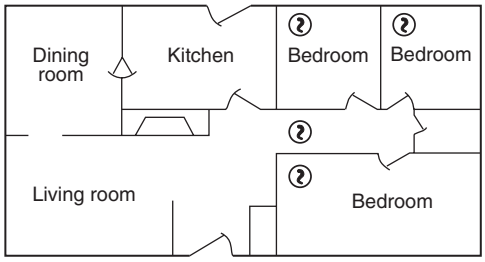

FIGURE A.11.5.1(b) A Smoke Alarm Should Be Located Between the Sleeping Area and the Rest of the Dwelling Unit as Well as in Each Bedroom.

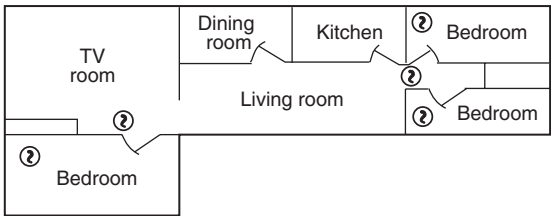

FIGURE A.11.5.1(c) In Dwelling Units with More Than One Sleeping Area, a Smoke Alarm Should Be Provided to Protect Each Sleeping Area in Addition to Smoke Alarms Required in Bedrooms.

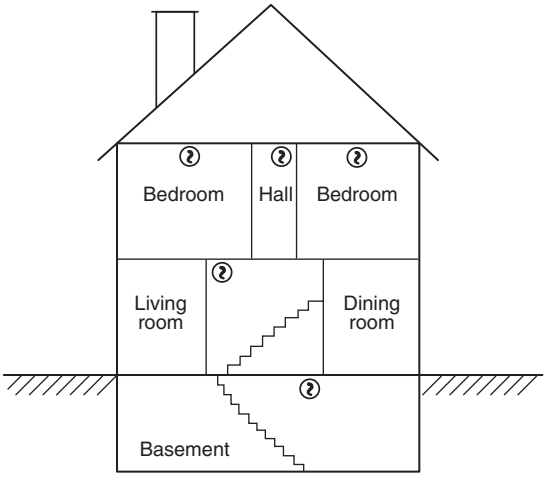

FIGURE A.11.5.1(d) A Smoke Alarm Should Be Located on Each Level in Addition to Each Bedroom.

Copyright National Fire Protection Association
Provided by IHS under license with NFPA
No reproduction or networking permitted without license from IHS
Not for Resale

A.11.5.1.1 Occupancies where smoke alarms are typically required include residential, residential board and care, or day-care home. The term *residential occupancy* is defined in 3.3.164 and includes one- and two-family dwellings; lodging or rooming houses; hotels, motels, and dormitories; and apartment buildings. The term *residential board and care occupancy* is defined in 3.3.164 and includes both small and large facilities. NFPA *101*, *Life Safety Code*, specifies a small facility to be one with sleeping accommodations for not more than 16 residents. The term *day-care home*, defined in 3.3.40, is a specific category of day-care occupancy. It should be noted that applicable laws, codes, or standards might include conditions that could impact the applicability of these requirements. The local authority should be consulted for specific details.

A.11.5.1.1(1) The term *sleeping room* applies to several occupancies including: one- and two-family dwellings; lodging or rooming houses; hotels, motels, and dormitories; apartment buildings; residential board and care facilities; and day-care homes. The term *guest room*, defined in 3.3.82, is an accommodation that includes sleeping facilities. It applies in the context of hotel and dormitory occupancies.

A.11.5.1.1(2) The term *dwelling unit* is defined in 3.3.54 and applies to one- and two-family dwellings and dwelling units of apartment buildings (including condominiums).

A.11.5.1.1(5) The term *guest suite* is defined in 3.3.83, and the term *living area* is defined in 3.3.95.

A.11.5.1.3.1 The requirements do not preclude the installation of smoke alarms on walls in accordance with 11.8.3.4. Some building configurations, such as division of rooms and open foyers or great rooms, may dictate that alarms be located so that they do not cover distinctly separate 46.5 m^2 (500 ft^2) areas but rather provide overlapping coverage relative to this spacing requirement.

A.11.5.2.1.1 Fire-warning performance is improved when all alarms are interconnected so that alarm notification is achieved throughout the occupiable areas. In some cases for existing construction, interconnection of alarms is specifically exempted by jurisdictional requirements. This allowance takes into consideration the cost of hard-wired interconnection.

A.11.5.2.2 One of the common problems associated with smoke alarms and detectors is the nuisance alarms that are usually triggered by products of combustion from cooking, smoking, or other household particulates. While an alarm for such a condition is anticipated and tolerated by the occupant of a dwelling unit through routine living experience, the alarm is not permitted where it also sounds alarms in other dwelling units or in common use spaces. Nuisance alarms caused by cooking are a very common occurrence, and inspection authorities should be aware of the possible ramifications where the coverage is extended beyond the limits of the dwelling unit.

A.11.7.2 The UL listing for smoke alarms addresses two categories of these devices: one for applications where sensitivity testing is not required [UTGT], and one for applications where sensitivity testing is required [UTHA]. Refer to the testing requirements for these devices in Chapter 10.

A.11.7.3 The linear space rating is the maximum allowable distance between heat detectors. The linear space rating is also a measure of detector response time to a standard test fire when tested at the same distance. A higher rating corresponds to a faster response time. This Code recognizes only those heat detectors with ratings of 15 m (50 ft) or more.

A.11.7.3.2 A heat detector with a temperature rating somewhat in excess of the highest normally expected ambient temperature is specified in order to avoid the possibility of premature response of the heat detector to non-fire conditions.

Some areas or rooms of the dwelling unit can experience ambient temperatures considerably higher than those in the normally occupied living spaces. Examples are unfinished attics, the space near hot air registers, and some furnace rooms. This fact should be considered in the selection of the appropriate temperature rating for fixed-temperature heat detectors to be installed in these areas or rooms.

A.11.7.8.2 Where 11.7.8.2, which provides for screening alarm signals to minimize response to false alarms, is to be implemented, the following should be considered:

(1) Was the verification call answered at the protected premises?
(2) Did the respondent provide proper identification?
(3) Is it necessary for the respondent to identify the cause of the alarm signal?
(4) Should the public service fire communications center be notified and advised that an alarm signal was received, including the response to the verification call, when an authorized respondent states that fire service response is not desired?
(5) Should the public service fire communications center be notified and advised that an alarm signal was received, including the response to the verification call, for all other situations, including both a hostile fire and no answer to the verification call?
(6) What other actions should be required by a standard operating procedure?

A.11.8.2.2 Once these limits have been exceeded, a fire alarm system should be installed.

A.11.8.3 One of the most critical factors of any fire alarm system is the location of the fire detecting devices. This annex is not a technical study. It is an attempt to provide some fundamentals on alarm or detector location. For simplicity, only those types of alarms or detectors recognized by Chapter 11 (e.g., smoke and heat alarms or detectors) are discussed. In addition, special problems requiring engineering judgment, such as locations in attics and in rooms with high ceilings, are not covered.

Smoke Alarm or Smoke Detector Mounting — Dead Air Space. The smoke from a fire generally rises to the ceiling, spreads out across the ceiling surface, and begins to bank down from the ceiling. The corner where the ceiling and wall meet is an air space into which the smoke could have difficulty penetrating. In most fires, this dead air space measures about 0.1 m (4 in.) along the ceiling from the corner and about 0.1 m (4 in.) down the wall, as shown in Figure A.11.8.3. Detectors should not be placed in this dead air space.

Smoke and heat detectors should be installed in those locations recommended by the manufacturer's published instructions, except in those cases where the space above the ceiling is open to the outside and little or no insulation is present over the ceiling. Such cases result in the ceiling being excessively cold in the winter or excessively hot in the summer. Where the ceiling is significantly different in temperature from the air space below, smoke and heat have difficulty reaching the ceiling and a detector that is located on that ceiling. In this situation, placement of the detector on a sidewall, with the top 0.1 m to 0.3 m (4 in. to 12 in.) from the ceiling, is recommended.

Copyright National Fire Protection Association
Provided by IHS under license with NFPA
No reproduction or networking permitted without license from IHS
Not for Resale

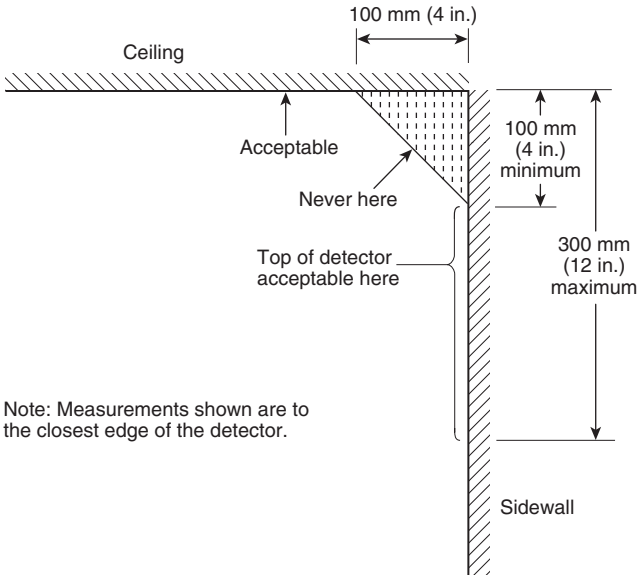

FIGURE A.11.8.3 Example of Proper Mounting for Detectors.

The situation described previously for uninsulated or poorly insulated ceilings can also exist, to a lesser extent, in the case of outside walls. The recommendation is to place the smoke alarm or smoke detector on a sidewall. However, where the sidewall is an exterior wall with little or no insulation, an interior wall should be selected. It should be recognized that the condition of inadequately insulated ceilings and walls can exist in multifamily housing (apartments), single-family housing, and mobile homes.

In those dwelling units employing radiant heating in the ceiling, the wall location is the recommended location. Radiant heating in the ceiling can create a hot-air, boundary layer along the ceiling surface, which can seriously restrict the movement of smoke and heat to a ceiling-mounted detector.

A.11.8.3.2 See Figure A.11.8.3.2 for further information on a smoke alarm or smoke detector mounting layout for a peaked ceiling.

A.11.8.3.3 See Figure A.11.8.3.3 for further information on a smoke alarm or smoke detector mounting layout for a sloped ceiling.

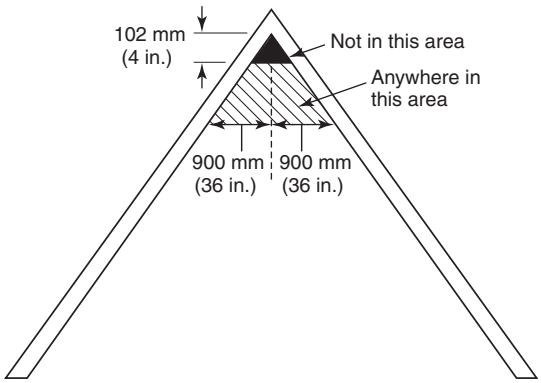

FIGURE A.11.8.3.2 Example of Proper Mounting for Alarms and Detectors with Peaked Ceilings.

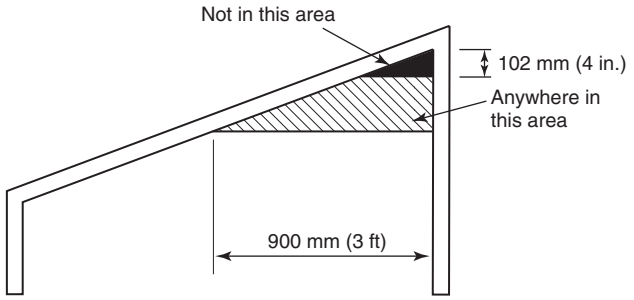

FIGURE A.11.8.3.3 Example of Proper Mounting for Alarms and Detectors with Sloped Ceilings.

A.11.8.3.4 See Figure A.11.8.3 for an example of proper mounting for smoke alarms.

A.11.8.3.5(10) Figure A.11.8.3.5(10) illustrates acceptable locations for tray-shaped ceilings.

A.11.8.4 While Chapter 11 does not require heat detectors as part of the basic protection scheme, it is recommended that the householder consider the use of additional heat detectors for the same reasons presented under A.11.8.3. The additional areas lending themselves to protection with heat detectors are the kitchen, dining room, attic (finished or unfinished), furnace room, utility room, basement, and integral or attached garage. For bedrooms, the installation of a smoke alarm or smoke detector is recommended over the installation of a heat detector for protection of the occupants from fires in their bedrooms.

Heat Detector Mounting — Dead Air Space. Heat from a fire rises to the ceiling, spreads out across the ceiling surface, and begins to bank down from the ceiling. The corner where the ceiling and the wall meet is an air space into which heat has difficulty penetrating. In most fires, this dead air space measures about 100 mm (4 in.) along the ceiling from the corner and 100 mm (4 in.) down the wall as shown in Figure A.11.8.3. Heat detectors should not be placed in this dead air space.

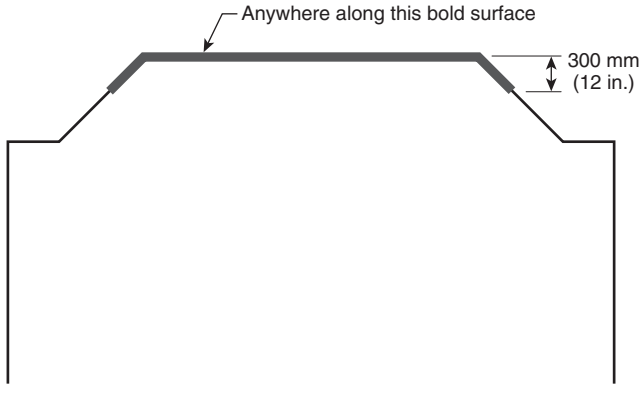

FIGURE A.11.8.3.5(10) Locations Permitted for Smoke Alarms on Tray-Shaped Ceiling.

Copyright National Fire Protection Association
Provided by IHS under license with NFPA
No reproduction or networking permitted without license from IHS
Not for Resale

The placement of the detector is critical where maximum speed of fire detection is desired. Thus, a logical location for a detector is the center of the ceiling. At this location, the detector is closest to all areas of the room.

The next logical location for mounting detectors is on the sidewall. Any detector mounted on the sidewall should be located as near as possible to the ceiling. A detector mounted on the sidewall should have the top of the detector between 100 mm and 300 mm (4 in. and 12 in.) from the ceiling.

The Spacing of Detectors. Where a room is too large for protection by a single detector, several detectors should be used. It is important that they be properly located so all parts of the room are covered. *(For further information on the spacing of detectors, see Chapter 5.)*

Where the Distance Between Detectors Should Be Further Reduced. The distance between detectors is based on data obtained from the spread of heat across a smooth ceiling. Where the ceiling is not smooth, the placement of the detector should be tailored to the situation.

For instance, with open wood joists, heat travels freely down the joist channels so that the maximum distance between detectors [15 m (50 ft)] can be used. However, heat has trouble spreading across the joists, so the distance in this direction should be one-half the distance allowed between detectors, as shown in Figure A.11.8.4, and the distance to the wall is reduced to 3.8 m (12.5 ft). Since one-half of 15 m (50 ft) is 7.6 m (25 ft), the distance between detectors across open wood joists should not exceed 7.6 m (25 ft), as shown in Figure A.11.8.4, and the distance to the wall is reduced [one-half of 7.6 m (25 ft)] to 3.8 m (12.5 ft). Paragraph 11.8.4.4 requires that detectors be mounted on the bottom of the joists and not up in joist channels.

Walls, partitions, doorways, ceiling beams, and open joists interrupt the normal flow of heat, thus creating new areas to be protected.

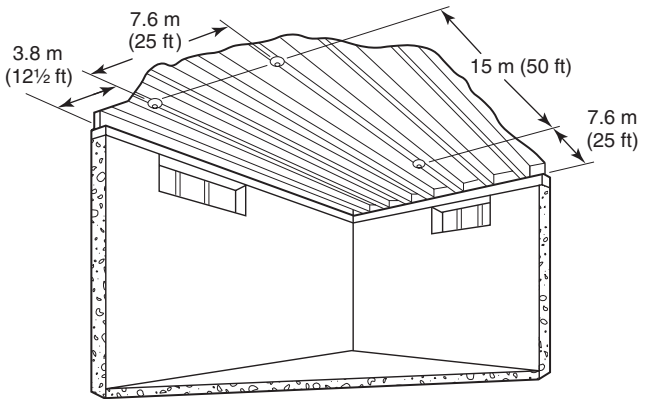

FIGURE A.11.8.4 Open Joists, Attics, and Extra-High Ceilings are Some of the Areas that Require Special Knowledge for Installation.

In addition to the special requirements for heat detectors installed on ceilings with exposed joists, reduced spacing also might be required due to other structural characteristics of the protected area, possible drafts, or other conditions that could affect detector operation.

A.11.8.4.5 Refer to Figure A.11.8.4, where the distance between detectors should be further reduced.

Annex B Engineering Guide for Automatic Fire Detector Spacing

This annex is not a part of the requirements of this NFPA document but is included for informational purposes only.

Users of Annex B should refer back to the text of NFPA 72 to familiarize themselves with the limitations of the design methods summarized herein.

Section B.2, and particularly B.2.2 and B.2.3, are largely based on the work of Custer and Meacham as found in "Performance-Based Fire Safety Engineering: An Introduction of Basic Concepts" (Meacham and Custer 1995) and Introduction to Performance-Based Fire Safety (Custer and Meacham 1997).

The National Fire Protection Association and the Technical Committee on Initiating Devices for Fire Alarm Systems gratefully acknowledge the technical contributions of the Society of Fire Protection Engineers, Richard Custer, and Brian Meacham to performance-based design and this annex.

B.1 Introduction.

B.1.1 Scope. Annex B provides information intended to supplement Chapter 5. It includes a procedure for determining detector spacing based on the objectives set for the system, size, and rate of growth of fire to be detected, various ceiling heights, ambient temperatures, and response characteristics of the detectors. In addition to providing an engineering method for the design of detection systems using plume-dependent detectors, heat detectors, and smoke detectors, this annex also provides guidance on the use of radiant energy–sensing detectors.

B.1.2 General.

B.1.2.1 In the 1999 edition Annex B was revised in its entirety from previous editions. The correlations originally used to develop the tables and graphs for heat and smoke detector spacings in the earlier editions have been updated to be consistent with current research. These revisions correct the errors in the original correlations. In earlier editions, the tables and graphs were based on an assumed heat of combustion of 20,900 kJ/kg (8986 Btu/lb). The effective heat of combustion for common cellulosic materials is usually taken to be approximately 12,500 kJ/kg (5374 Btu/lb). The equations in this annex were produced using test data and data correlations for cellulosic (wood) fuels that have a total heat of combustion of about 12,500 kJ/kg (5374 Btu/lb).

B.1.2.2 For the purposes of this annex, the heat produced by a fire is manifested either as convective heat or radiant heat. It is assumed that conductive heat transfer is of little consequence during the early stages of the development of a fire, where this annex is relevant. A convective heat release rate fraction equal to 75 percent of the total heat release rate has been used in this annex. Users should refer to references 12 and 13 in G.2.3 for fuels or burning conditions that are substantially different from these conditions.

B.1.2.3 The design methods for plume-dependent fire detectors provided in this annex are based on full-scale fire tests funded by the Fire Detection Institute in which all fires were geometrically growing flaming fires. *(See Environments of Fire Detectors — Phase 1: Effect of Fire Size, Ceiling Height and Material; Measurements Vol. I and Analysis Vol. II [10].)*

Copyright National Fire Protection Association
Provided by IHS under license with NFPA
No reproduction or networking permitted without license from IHS
Not for Resale

B.1.2.4 The guidance applicable to smoke detectors is limited to a theoretical analysis based on the flaming fire test data and is not intended to address the detection of smoldering fires.

B.1.2.5 The design methods for plume-dependent fire detectors do not address the detection of steady-state fires.

B.1.2.6 The design methods for plume-dependent fire detectors used in this annex are only applicable when employed in the context of applications where the ceiling is smooth and level. They cannot be used for ceilings where there are beams, joists, or bays formed by beams and purlins. The research upon which the following methods have been based did not consider the effect of beams, joists, and bays in sufficient detail to justify the use of this annex to those applications.

B.1.3 Purpose.

B.1.3.1 The purpose of Annex B is to provide a performance basis for the location and spacing of fire detection–initiating devices. The sections for heat and smoke detectors provide an alternative design method to the prescriptive approach presented in Chapter 5 (i.e., based on their listed spacings). The section on radiant energy–sensing detectors elaborates on the performance-based criteria already existing in Chapter 5. A performance-based approach allows one to consider potential fire growth rates and fire signatures, the individual compartment characteristics, and damageability characteristics of the targets (e.g., occupants, equipment, contents, structures, and so on) in order to determine the location of a specific type of detector to meet the objectives established for the system.

B.1.3.2 Under the prescriptive approach, heat detectors are installed according to their listed spacing. The listed spacing is determined in a full-scale fire test room. The fire test room used for the determination of listed spacing for heat detectors has a ceiling height of 4.8 m (15 ft 9 in.). A steady-state, flammable liquid fire with a heat release rate of approximately 1137 kW (1200 Btu/sec), located 0.9 m (3 ft) above the floor, is used as the test fire. Special 71°C (160°F) test sprinklers are installed on a 3 m × 3 m (10 ft × 10 ft) spacing array such that the fire is in the center of the sprinkler array. The heat detectors being tested are installed in a square array with increasing spacing centered about the fire location. The elevation of the test fire is adjusted during the test to produce the temperature versus time curve at the test sprinkler heads to yield actuation of the heads in 2.0 minutes ±10 seconds. The largest heat detector spacing that achieves alarm before the actuation of the sprinkler heads in the test becomes the listed spacing for the heat detector. See Figure A.5.6.5.1(c). If the room dimensions, ambient conditions, and fire and response characteristics of the detector are different from above, the response of the heat detector must be expected to be different as well. Therefore, the use of an installed detector spacing that is different from the listed spacing might be warranted through the use of a performance-based approach if the conditions are as follows:

(1) The design objectives are different from designing a system that operates at the same time as a sprinkler in the approval test.
(2) Faster response of the device is desired.
(3) A response of the device to a smaller fire than used in the approved test is required.
(4) Accommodation to room geometry that is different from that used in the listing process.
(5) Other special considerations, such as ambient temperature, air movement, ceiling height, or other obstruction, are different from or are not considered in the approval tests.
(6) A fire other than a steady state 1137 kW (1200 Btu/sec) fire is contemplated.

B.2 Performance-Based Approach to Designing and Analyzing Fire Detection Systems.

B.2.1 Overview. Subsection B.2.1 provides an overview of a systematic approach to conducting a performance-based design or analysis of a fire detection system. The approach has been outlined by Custer and Meacham and the SFPE *Engineering Guide to Performance Based Fire Protection Analysis and Design* [40] and is summarized below in the context of design and analysis of fire detection systems. *(Refer to Figure B.2.1.)* This approach has been divided into two phases: defining goals and objectives and system design and evaluation.

B.2.2 Phase 1 — Defining Goals and Objectives.

B.2.2.1 Define Scope of Project.

B.2.2.1.1 The initial step of this approach is to identify information relative to the overall scope of work on the project, including characteristics of the building, design intent, design and construction team organization, constraints on design and project schedule, proposed building construction and features, relevant hazards, how the building functions, occupant characteristics, and so forth. Additional information that one may want to consider could also include characteristics of the fire departments, historic preservation, building management, and applicable regulations.

B.2.2.1.2 While defining the project's scope, the designer will identify which of the three situations in Table B.2.2.1.2 best describes the project at hand (i.e., a performance-based analysis of an existing detection system in an existing building).

B.2.2.2 Identify Goals.

B.2.2.2.1 Fire protection assets are acquired in order to attain one or more of the following four goals:

(1) To provide life safety (occupants, employees, fire fighters, and so forth)
(2) To protect property and heritage (structure, contents, and so forth)
(3) To provide for continuity of operations (protect stakeholder's mission, operating capability, and so forth)
(4) To limit the environmental impact of fire (toxic products, fire-fighting water run-off, and so forth)

B.2.2.2.2 Fire protection goals are like other goals in that they are generally easy to agree on, are qualitative, and are noncontroversial in nature. They express the desired overall outcome to be achieved, that is, to provide life safety to the building occupants.

B.2.2.2.3 When starting the performance-based process, the various parties — including the stakeholders (i.e., the architect, building owner, insurance carrier, building or fire officials, and so forth), the authority having jurisdiction, and the design engineer work — together to prioritize the basic fire protection goals. Prioritizing is based on the stakeholder's objective and the building and occupancy involved. For example, life safety is a high priority in a hospital or stadium, while property protection might have an equally high priority in a large warehouse or historic building.

Copyright National Fire Protection Association
Provided by IHS under license with NFPA
No reproduction or networking permitted without license from IHS
Not for Resale

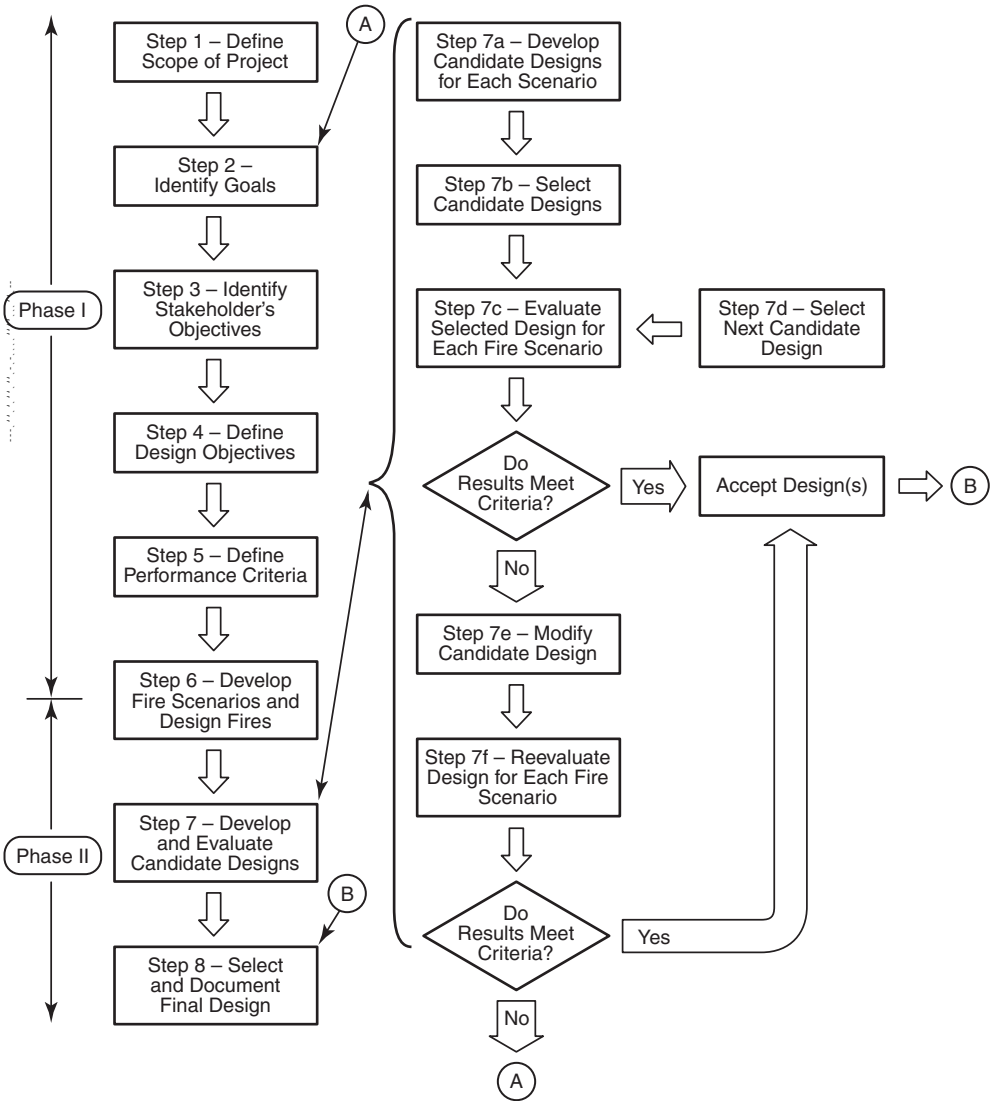

FIGURE B.2.1 Overview of the Performance-Based Design Process. [25]

Table B.2.2.1.2 Design/Analysis Situation

Building Type	System Type	Design/Analysis
New	New	Design
Existing	New	Design
Existing	Existing	Analysis

B.2.2.3 Identify Stakeholder's Objectives.

B.2.2.3.1 Each stakeholder must explicitly state her or his objectives in terms of acceptable loss for the various goals previously stated.

B.2.2.3.2 Stakeholder objectives specify how much safety the stakeholder wants, needs, or can afford. "No loss of life within the room of origin" is a sample stakeholder objective or statement of the stakeholder's maximum acceptable loss.

B.2.2.3.3 The stakeholder's objectives are generally not stated in fire protection engineering terms.

B.2.2.3.4 Note that in a performance-based code environment, the Code will most likely define a performance objective or stakeholder objective.

B.2.2.4 Define Design Objectives.

B.2.2.4.1 The stakeholder's objective must then be explicitly stated and quantified in fire protection engineering terms that describe how the objective will be achieved. This demands that the design objectives be expressed quantitatively. See Table B.2.2.4.1(a) through Table B.2.2.4.1(c).

B.2.2.4.2 The design objective provides a description of how the stakeholder's objective will be achieved in general fire protection engineering terms prior to this description being quantified. The general objective is then reduced to explicit and quantitative fire protection engineering terms. The explicit fire protection engineering objectives provide a performance benchmark against which the predicted performance of a candidate design is evaluated.

Copyright National Fire Protection Association
Provided by IHS under license with NFPA
No reproduction or networking permitted without license from IHS
Not for Resale

Table B.2.2.4.1(a) Defining Goals and Objectives — Life Safety

Fire Protection Goal	Provide life safety
Stakeholder's Objective	No loss of life within compartment of origin
Design Objective	Maintain tenable conditions within the compartment of origin
Performance Criteria	Maintain: Temperatures below *xx*°C (°F) Visibility above *yy* m (ft) CO concentration below *zz* ppm for *tt* minutes

Table B.2.2.4.1(b) Defining Goals and Objectives — Property Protection

Fire Protection Goal	Provide protection of property
Stakeholder's Objective	No fire damage outside compartment of origin
Design Objective	Limit the spread of flame to the compartment of origin
Performance Criteria	Maintain upper layer temperature below *xx*°C (°F) and radiation level to the floor below *yy* kW/m^2 ($Btu/sec \cdot ft^2$) to prevent flashover

Table B.2.2.4.1(c) Defining Goals and Objectives — Continuity of Operations

Fire Protection Goal	Provide continuity of operations
Stakeholder's Objective	Prevent any interruption to business operations in excess of 2 hours
Design Objective	Limit the temperature and the concentration of HCl to within acceptable levels for continued operation of the equipment
Performance Criteria	Provide detection such that operation of a gaseous suppression system will maintain temperatures below *xx*°C (°F) and HCl levels below *yy* ppm

B.2.2.5 Define Performance Criteria.

B.2.2.5.1 Once the design objective has been established, specific, quantitatively expressed criteria that indicate attainment of the performance objective are developed.

B.2.2.5.2 Performance criteria provide a yardstick or threshold values that can measure a potential design's success in meeting stakeholder objectives and their associated design objectives. [25]

B.2.2.5.3 Quantification of the design objectives into performance criteria involves determination of the various fire-induced stresses that are a reflection of the stated loss objectives. Performance criteria can be expressed in various terms, including temperature, radiant flux, a rate of heat release, or concentration of a toxic or corrosive species that must not be exceeded.

B.2.2.5.4 Once the design performance criteria are established, appropriate safety factors are applied to obtain the working design criteria. The working design criteria reflect the performance that must be achieved by the detection system. This performance level must allow appropriate actions to be undertaken (e.g., activate suppression systems, occupants' egress, notify fire department, and so forth) to meet the objectives. An acceptable fire detection system design provides the detection of the fire sufficiently early in its development to permit the other fire protection systems to meet or exceed the relevant performance criteria established for those systems.

B.2.2.5.5 Throughout the process identified as Phase I and II, communication should be maintained with the authorities having jurisdiction (AHJs) to review and develop consensus on the approach being taken. It is recommended that this communication commence as early in the design process as possible. The AHJ should also be involved in the development of performance criteria. Often the acceptance of a performance-based design in lieu of a design based on a prescriptive approach relies on demonstrating equivalence. This is called the comparative method, where the engineer demonstrates that the performance-based design responds at least as well as, if not better than, a system designed using a prescriptive approach.

B.2.3 Phase II — System Design and Evaluation.

B.2.3.1 Develop Fire Scenarios.

B.2.3.1.1 General.

B.2.3.1.1.1 A fire scenario defines the development of a fire and the spread of combustion products throughout a compartment or building. A fire scenario represents a set of fire conditions that are deemed a threat to a building and its occupants and/or contents, and, therefore, should be addressed in the design of the fire protection features of the structure. [25]

B.2.3.1.1.2 The process of developing a fire scenario is a combination of hazard analysis and risk analysis. The hazard analysis identifies potential ignition sources, fuels, and fire development. Risk is the probability of occurrence multiplied by the consequences of that occurrence. The risk analysis looks at the impact of the fire to the surroundings or target items.

B.2.3.1.1.3 The fire scenario should include a description of various conditions, including building characteristics, occupant characteristics, and fire characteristics. [25, 40]

B.2.3.1.2 Building Characteristics. Building characteristics include the following:

(1) Configuration (area; ceiling height; ceiling configuration, such as flat, sloped beams; windows and doors, and thermodynamic properties)
(2) Environment (ambient temperature, humidity, background noise, and so forth)
(3) Equipment (heat-producing equipment, HVAC, manufacturing equipment, and so forth)
(4) Functioning characteristics (occupied, during times, days, and so forth)
(5) Target locations
(6) Potential ignition sources
(7) Aesthetic or historic preservation considerations

(Note target items — that is, areas associated with stakeholder objectives — along the expected route of spread for flame, heat, or other combustion products.)

Copyright National Fire Protection Association
Provided by IHS under license with NFPA
No reproduction or networking permitted without license from IHS
Not for Resale

B.2.3.1.3 Occupant Characteristics. Occupant characteristics include the following:

(1) Alertness (sleeping, awake, and so forth)
(2) Age
(3) Mobility
(4) Quantity and location within the building
(5) Sex
(6) Responsiveness
(7) Familiarity with the building
(8) Mental challenges

Human behavior plays a key role in life safety, as well as with the other fire safety goals. *(See SFPE Engineering Guide to Human Behavior in Fire.)* The possible actions that could be taken upon detecting a fire as well as how one reacts once they hear an alarm need to be considered. These actions can include alerting and rescuing other family members, gathering belongings, interpreting or verifying the message, shutting down processes. They should also include a look at how individuals respond on their own as well as in group situations.

Once these occupant characteristics and their behavior have been analyzed, one may also want to determine evacuation times. Numerous factors again need to be considered, including number of occupants, distribution throughout the building, pre-movement times, motivation, state of wakefulness, familiarity, capacity, and layout of the means of egress.

Due to the nature of human behavior, it is difficult to accurately quantify the movements and evacuation times of occupants from a building. Thus, particular attention should be given to assumptions and uncertainties assigned to these occupant characteristics.

B.2.3.1.4 Fire Characteristics.

B.2.3.1.4.1 Fire characteristics include the following:

(1) Ignition sources — temperature, energy, time, and area of contact with potential fuels
(2) Initial fuels
   (a) *State.* Fuels can come in various states (i.e., solid, liquid, or gas). Each state can have very different combustion characteristics (i.e., a solid block of wood versus wood shavings versus wood dust)
   (b) *Type and quantity of fuel.* A fire's development and duration depends also on what is burning. Cellulosic-based materials burn quite differently compared to plastics, or flammable liquids, in terms of producing different fire growth rates, heat release rates, and products of combustion.
   (c) *Fuel configuration.* The geometrical arrangement of the fuel can also influence the fire growth rate and heat release rate. A wood block will burn very differently from a wood crib, as there is more surface area and ventilation, and radiation feedback between the combustible materials is increased.
   (d) *Fuel location.* The location of the fuel (i.e., against wall, in corner, in open, against the ceiling) will influence the development of the fire. Fires in the corner of a room or against a wall will typically grow faster than a fire located in the center of a room.
   (e) *Heat release rate.* The rate at which heat is released depends on the fuel's heat of combustion, the mass loss rate, the combustion efficiency, and the amount of incident heat flux. The mass loss rate also directly relates to the production rate of smoke, toxic gases, and other products of combustion.
   (f) *Fire growth rate.* Fires grow at various rates that are dependent on type of fuel, configuration, and amount of ventilation. Some fires such as confined flammable liquid fires may not be growing fires as their burning area is fixed. These are referred to as steady state fires. The faster a fire develops, the faster the temperature rises, and the faster the products of combustion are produced.
   (g) *Production rate of combustion products (smoke, CO, CO_2, etc.).* As the characteristics of various fuels vary, so will the type of quantity of materials generated during combustion. Species production rates can be estimated with species yields, which are representative of the mass of species produced per mass of fuel loss.
(3) Secondary fuels — proximity to initial fuels; amount; distribution, ease of ignitibility *(see initial fuels)*; and extension potential (beyond compartment, structure, area, if outside)

B.2.3.1.4.2 An example of a fire scenario in a computer room might be as follows.

The computer room is 9.1 m × 6 m (30 ft × 20 ft) and 2.8 m (8 ft) high. It is occupied 12 hours a day, 5 days a week. The occupants are mobile and familiar with the building. There are no fixed fire suppression systems protecting this location. The fire department is capable of responding to the scene in 6 minutes, and an additional 15 minutes for fire ground evolution is needed.

Overheating of a resistor leads to the ignition of a printed circuit board and interconnecting cabling. This leads to a fire that quickly extends up into the above ceiling space containing power and communications cabling. The burning of this cabling produces large quantities of dense, acrid smoke and corrosive products of combustion that spread throughout the computer suite. This causes the loss of essential computer and telecommunications services for 2 months.

B.2.3.2 Develop Design Fires.

B.2.3.2.1 General.

B.2.3.2.1.1 The design fire is the fire the system is intended to detect. When specifying a design fire, the specifics regarding the ignition, growth, steady-state output (if appropriate), and decay of the fire are expressed quantitatively.

There are numerous analysis techniques available to identify fire scenarios. These can typically fall into one of two categories: probabilistic or deterministic.

Probabilistic approaches typically relate to the statistical likelihood that ignition will occur, and the resultant outcome if a fire does occur. Probabilistic approaches could use the following as sources of data:

(1) Fire statistics (ignition, first items ignited, and so on)
(2) Past history
(3) Hazard/failure analysis
(4) Failure modes and effects analysis (FMEA)
(5) Event trees
(6) Fault trees
(7) HAZOP studies
(8) Cause-consequence analysis

Deterministic approaches use analysis or engineering judgment that is based on chemistry, physics, or correlations based on experimental data.

The selection of the design fire scenario and the supporting analysis techniques should be appropriate to the premise

Copyright National Fire Protection Association
Provided by IHS under license with NFPA
No reproduction or networking permitted without license from IHS
Not for Resale

or processes. Inappropriate scenario selection or analysis can result in conservative designs that are not economical or designs with unacceptably high risks.

B.2.3.2.1.2 Fire development varies depending on the combustion characteristics of the fuel or fuels involved, the physical configuration of the fuels, the availability of combustion air, and the influences due to the compartment. Once a stable flame is attained, most fires grow in an accelerating pattern *(see Figure B.2.3.2.3.5)*, reach a steady state characterized by a maximum heat release rate, and then enter into a decay period as the availability of either fuel or combustion air becomes limited. Fire growth and development are limited by factors such as quantity of fuel, arrangement of fuel, quantity of oxygen, and the effect of manual and automatic suppression systems.

For design fires with a smoldering period, very little data are available. The design engineer should, therefore, be careful in specifying the duration of this period. The fire growth rate of flaming fires is determined by a variety of factors, including the following:

(1) Type of fuel and ease of ignition
(2) Fuel configuration and orientation
(3) Location of secondary fuel packages
(4) Proximity of fire to walls and corners
(5) Ceiling height
(6) Ventilation

It is important to note when using heat release data that the fuel burning as well as the compartment in which it is burning need to be considered together. A couch may produce sufficient heat to cause flashover in a small compartment, whereas this same couch placed in a large compartment with high ceilings may cause a limited fire and never reach flashover.

Several sources for developing design fires should be reviewed, including *SFPE Handbook of Fire Protection Engineering* [41]; NFPA *101, Life Safety Code*; *NFPA 5000, Building Construction and Safety Code*; and *SFPE Engineering Guide to Performance Base Fire Protection Analysis and Design* [40].

B.2.3.2.2 Heat Release Rates.

B.2.3.2.2.1 Fires can be characterized by their rate of heat release, measured in terms of the number of kW (Btu/sec) of heat liberated. Typical maximum heat release rates (Q_m) for a number of different fuels and fuel configurations are provided in Table B.2.3.2.6.2(a) and Table B.2.3.2.6.2(c). The heat release rate of a fire can be described as a product of a heat release density and fire area using the following equation:

$$Q_m = qA \qquad \textbf{(B.1)}$$

where:
Q_m = maximum or peak heat release rate [kW (Btu/sec)]
q = heat release rate density per unit floor area [kW/m^2 (Btu/sec·ft^2)]
A = floor area of the fuel [m^2 (ft^2)]

B.2.3.2.2.2 The following example is provided: A particular hazard analysis is to be based on a fire scenario involving a 3.05 m × 3.05 m (10 ft × 10 ft) stack of wood pallets stored 1.5 m (5 ft) high. Approximately what peak heat release rate can be expected?

From Table B.2.3.2.6.2(a), the heat release rate density (q) for 1.5 m (5 ft) high wood pallets is approximately 3745 kW/m^2 (330 Btu/sec·ft^2).

The area is 3.05 m × 3.05 m (10 ft × 10 ft), or 9.29 m^2 (100 ft^2). Using equation B.1 to determine the heat release rate yields the following:

3745 × 9.29 = 34,791 kW (330 × 100 = 33,000 Btu/sec)

As indicated in the Table B.2.3.2.6.2(a), this fire generally produces a medium to fast fire growth rate, reaching 1055 kW (1000 Btu/sec) in approximately 90 to 190 seconds.

B.2.3.2.3 Fire Growth Rate.

B.2.3.2.3.1 Fires can also be defined by their growth rate or the time (t_g) it takes for the fire to reach a given heat release rate. Previous research [16] has shown that most fires grow exponentially and can be expressed by what is termed the "power law fire growth model":

$$Q \cong t^p \qquad \textbf{(B.2)}$$

where:
Q = heat release rate (kW or Btu/sec)
t = time (seconds)
p = 2

B.2.3.2.3.2 In fire protection, fuel packages are often described as having a growth time (t_g). This is the time necessary after the ignition with a stable flame for the fuel package to attain a heat release rate of 1055 kW (1000 Btu/sec). The following equations describe the growth of design fires:

$$Q = \frac{1055}{t_g^2} t^2 \quad \text{(for SI units)} \qquad \textbf{(B.3a)}$$

or

$$Q = \frac{1000}{t_g^2} t^2 \quad \text{(for inch-pound units)} \qquad \textbf{(B.3b)}$$

and thus

$$Q = \alpha t^2 \qquad \textbf{(B.4)}$$

where:
Q = heat release rate [kW or (Btu/sec)]
α = fire growth rate [$1055/t_g^2$ (kW/sec^2) or $1000/t_g^2$ (Btu/sec^3)]
t_g = fire growth time to reach 1055 kW (1000 Btu/sec) after established burning
t = time after established burning occurs (seconds)

B.2.3.2.3.3 Table B.2.3.2.6.2(a) and Table B.2.3.2.6.2(e) provide values for t_g, the time necessary to reach a heat release rate of 1055 kW (1000 Btu/sec), for a variety of materials in various configurations.

B.2.3.2.3.4 Test data from 40 furniture calorimeter tests, as indicated in Table B.2.3.2.6.2(e), have been used to independently verify the power law fire growth model, $Q = \alpha t^2$. [14] For reference, the table contains the test numbers used in the original NIST reports.

The virtual time of origin (t_v) is the time at which a stable flame had appeared and the fires began to obey the power law fire growth model. Prior to t_v, the fuels might have smoldered but did not burn vigorously with an open flame. The model curves are then predicted by the following equations:

Copyright National Fire Protection Association
Provided by IHS under license with NFPA
No reproduction or networking permitted without license from IHS
Not for Resale

$$Q = \alpha (t - t_v)^2 \quad \textbf{(B.5)}$$

and

$$Q = \left(\frac{1055}{t_g^2}\right)(t - t_v)^2 \quad \text{(for SI units)} \quad \textbf{(B.6a)}$$

or

$$Q = \left(\frac{1000}{t_g^2}\right)(t - t_v)^2 \quad \text{(for inch-pound units)} \quad \textbf{(B.6b)}$$

where:
Q = heat release rate [kW or (Btu/sec)]
α = fire growth rate [$1055/t_g^2$ (kW/sec^2) or $1000/t_g^2$ (Btu/sec^3)]
t_g = fire growth time to reach 1055 kW (1000 Btu/sec)
t = time after established burning occurs (seconds)
t_v = virtual time of origin (seconds)

B.2.3.2.3.5 Figure B.2.3.2.3.5 is an example of actual test data with a power law curve superimposed.

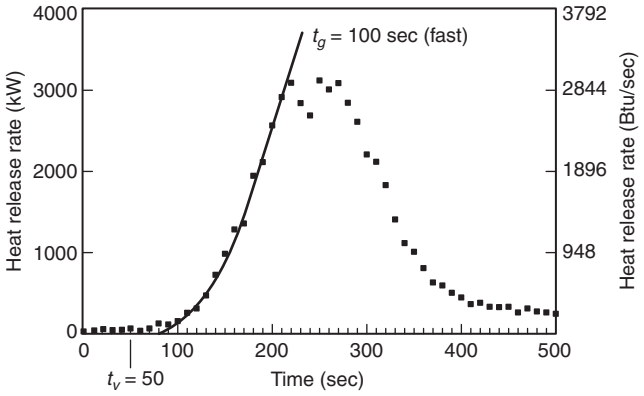

FIGURE B.2.3.2.3.5 Test 38, Foam Sofa.

B.2.3.2.3.6 For purposes of this annex, fires are classified as being either slow-, medium-, or fast-developing from the time that established burning occurs until the fire reaches a heat release rate of 1055 kW (1000 Btu/sec). Table B.2.3.2.3.6 results from using the relationships discussed earlier. *[See also Table B.2.3.2.6.2(a).]*

B.2.3.2.4 Flame Height.

B.2.3.2.4.1 There are a number of flame height to heat release rate correlations available that can be used to determine an appropriate design fire. The differences in the various correlations arise from the different data sets and curve-fitting methods used by the researchers. One such correlation is shown in Figure B.2.3.2.4.1. It indicates that flame height and fire heat release rate are directly related. [2] The lines in Figure B.2.3.2.4.1 were derived from the following equation:

$$h_f = 0.182(kQ)^{2/5} \quad \text{(for SI units)} \quad \textbf{(B.7a)}$$

or

$$h_f = 0.584(kQ)^{2/5} \quad \text{(for inch-pound units)} \quad \textbf{(B.7b)}$$

where:
h_f = flame height (m or ft)
k = wall effect factor
Q = heat release rate (kW or Btu/sec)

Where there are no nearby walls, use $k = 1$.
Where the fuel package is near a wall, use $k = 2$.
Where the fuel package is in a corner, use $k = 4$.

B.2.3.2.4.2 The following example is provided: What is the average flame height of a fire with a heat release rate of 1055 kW (1000 Btu/sec) located in the middle of a compartment?

From Figure B.2.3.2.4.1, find the heat release rate on the abscissa and read estimated flame height from the ordinate, or use equation B.7a or B.7b:

$h_f = 0.182(kQ)^{2/5}$ (for SI units) or
$h_f = 0.584(kQ)^{2/5}$ (for inch-pound units)
$h_f = 0.182(1 \times 1055 \text{ kW})^{2/5}$ or
$h_f = 0.584(1 \times 1000 \text{ Btu/sec})^{2/5}$
$h_f = 2.8$ m (9.25 ft)

Another correlation has been derived by Drysdale [42]:

$$I = 0.235\, Q_c^{2/5} - 1.02D$$

where:
I = the flame height (m)
Q_c = the convective heat release rate (kW)
D = the diameter of the fuel bed

These correlations will not produce the same prediction when used for exactly the same input data. There is inherent uncertainty in the calculated flame height due to the fact that the flaming combustion in the diffusion regime is a dynamic phenomenon. The designer should run multiple predictions with bounding values to address the inherent uncertainty of the correlations.

B.2.3.2.5 Selection of Critical Fire Size. Because all fire control means require a finite operation time, there is a critical difference between the time at which the fire must be detected and the time at which it achieves the magnitude of the design fire. Even though a fire has been detected, this does not mean that it stops growing. Fires typically grow exponentially until they become ventilation controlled, and limited by the availability of fuel, or until some type of fire suppression or extinguishment is commenced. Figure B.2.3.2.5 shows that there

Table B.2.3.2.3.6 Power Law Heat Release Rates

Fire Growth Rate	Growth Time (t_g)	α (kW/sec^2)	α (Btu/sec^3)
Slow	$t_g \geq 400$ sec	$\alpha \leq 0.0066$	$\alpha \leq 0.0063$
Medium	$150 \leq t_g < 400$ sec	$0.0066 < \alpha \leq 0.0469$	$0.0063 < \alpha \leq 0.0445$
Fast	$t_g < 150$ sec	$\alpha > 0.0469$	$\alpha > 0.0445$

Copyright National Fire Protection Association
Provided by IHS under license with NFPA
No reproduction or networking permitted without license from IHS
Not for Resale

can be a significant increase in the heat release rate with only a small change in time due to the exponential growth rate of fire.

B.2.3.2.5.1 Once the design objectives and the design fire have been established, the engineer will need to establish two points on the design fire curve: Q_{DO} and Q_{CR}.

B.2.3.2.5.2 Q_{DO} represents the heat release rate, or product release rate, which produces conditions representative of the design objective. This is the "design fire." However, Q_{DO} does not represent the point in time at which detection is needed. Detection must occur sufficiently early in the development of the fire to allow for any intrinsic reaction time of the detection as well as the operation time for fire suppression or extinguishing systems. There will be delays in both detection of the fire as well as the response of equipment, or persons, to the alarm.

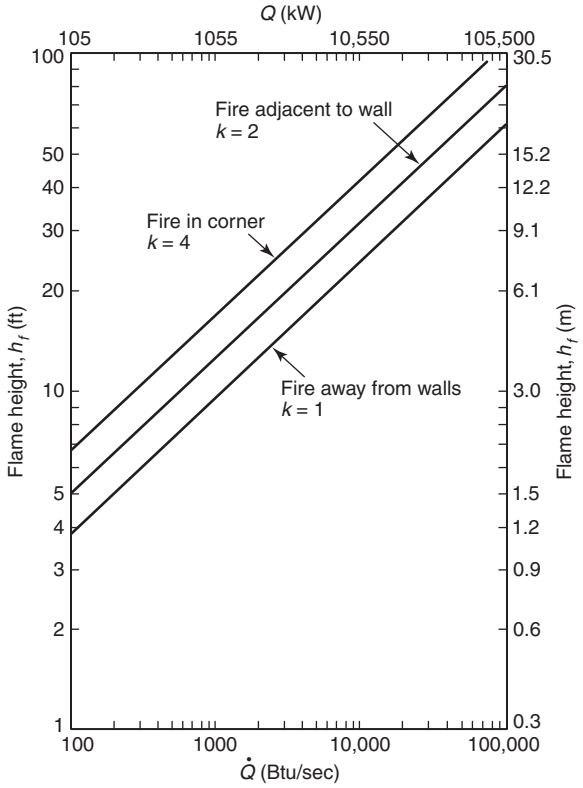

FIGURE B.2.3.2.4.1 Heat Release Rate vs. Flame Height.

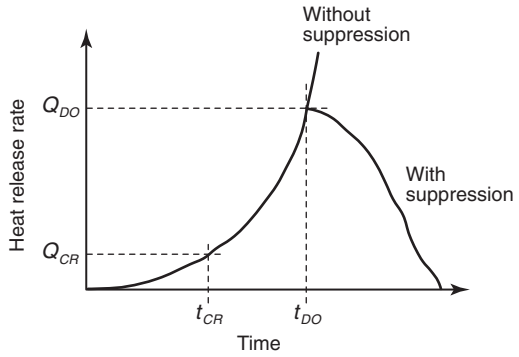

FIGURE B.2.3.2.5 Critical and Design Objective Heat Release Rates vs. Time.

B.2.3.2.5.3 A critical fire size (Q_{CR}) is identified on the curve that accounts for the delays in detection and response. This point represents the maximum permissible fire size at which detection must occur that allows appropriate actions to be taken to keep the fire from exceeding the design objective (Q_{DO}).

B.2.3.2.5.4 Delays are inherent in both the detection system as well as in the response of the equipment or people that need to react once a fire is detected. Delays associated with the detection system include a lag in the transport of combustion products from the fire to the detector and response time lag of the detector, alarm verification time, processing time of the detector, and processing time of the control unit. Delays are also possible with an automatic fire extinguishing system(s) or suppression system(s). Delay can be introduced by alarm verification or crossed zone detection systems, filling and discharge times of preaction systems, delays in agent release required for occupant evacuation (e.g., CO_2 systems), and the time required to achieve extinguishment.

B.2.3.2.5.5 Occupants do not always respond immediately to a fire alarm. The following must be accounted for when evaluating occupant safety issues:

(1) Time expected for occupants to hear the alarm (due to sleeping or manufacturing equipment noise)
(2) Time to decipher the message (e.g., voice alarm system)
(3) Time to decide whether to leave (get dressed, gather belongings, call security)
(4) Time to travel to an exit

B.2.3.2.5.6 Response of the fire department or fire brigade to a fire incident involves several different actions that need to occur sequentially before containment and extinguishment efforts of the fire can even begin. These actions should also be taken into account to properly design detection systems that meet the design objectives. These actions typically include the following:

(1) Detection (detector delays, control unit delays, and so forth)
(2) Notification to the monitoring station (remote, central station, proprietary, and so forth)
(3) Notification of the fire department
(4) Alarm handling time at the fire department
(5) Turnout time at the station
(6) Travel time to the incident
(7) Access to the site
(8) Set-up time on site
(9) Access to building
(10) Access to fire floor
(11) Access to area of involvement
(12) Application of extinguishant on the fire

B.2.3.2.5.7 Unless conditions that limit the availability of combustion air or fuel exist, neither the growth of the fire nor the resultant damage stop until fire suppression begins. The time needed to execute each step of the fire response sequence of actions must be quantified and documented. When designing a detection system, the sum of the time needed for each step in the response sequence (t_{delay}) must be subtracted from the time at which the fire attains the design objective (t_{DO}) in order to determine the latest time and fire size (Q_{CR}) in the fire development at which detection can occur and still achieve the system design objective.

Copyright National Fire Protection Association
Provided by IHS under license with NFPA
No reproduction or networking permitted without license from IHS
Not for Resale

B.2.3.2.5.8 The fire scenarios and design fires selected should include analysis of best and worst-case conditions and their likelihood of occurring. It is important to look at different conditions and situations and their effects on response.

B.2.3.2.6 Data Sources.

B.2.3.2.6.1 To produce a design fire curve, information is needed regarding the burning characteristics of the object(s) involved. Data can be obtained from either technical literature or by conducting small or large scale calorimeter tests.

B.2.3.2.6.2 Some information is contained here in Figure B.2.3.2.6.2 and Table B.2.3.2.6.2(a) through Table B.2.3.2.6.2(e).

Table B.2.3.2.6.2(a) Maximum Heat Release Rates — Warehouse Materials

Warehouse Materials	Growth Time (t_g) (seconds)	Heat Release Density (q) kW/m^2	Heat Release Density (q) Btu/sec·ft^2	Classification
1. Wood pallets, stack, 0.46 m (1½ ft) high (6%–12% moisture)	150–310	1248	110	fast–medium
2. Wood pallets, stack, 1.52 m (5 ft) high (6%–12% moisture)	90–190	3745	330	fast
3. Wood pallets, stack, 3.05 m (10 ft) high (6%–12% moisture)	80–110	6810	600	fast
4. Wood pallets, stack, 4.88 m (16 ft) high (6%–12% moisture)	75–105	10,214	900	fast
5. Mail bags, filled, stored 1.52 m (5 ft) high	190	397	35	medium
6. Cartons, compartmented, stacked 4.57 m (15 ft) high	60	2270	200	fast
7. Paper, vertical rolls, stacked 6.10 m (20 ft) high	15–28	—	—	*
8. Cotton (also PE, PE/cot, acrylic/nylon/PE), garments in 3.66 m (12 ft) high racks	20–42	—	—	*
9. Cartons on pallets, rack storage, 4.57 m–9.14 m (15 ft–30 ft) high	40–280	—	—	fast–medium
10. Paper products, densely packed in cartons, rack storage, 6.10 m (20 ft) high	470	—	—	slow
11. PE letter trays, filled, stacked 1.52 m (5 ft) high on cart	190	8512	750	medium
12. PE trash barrels in cartons, stacked 4.57 m (15 ft) high	55	2837	250	fast
13. FRP shower stalls in cartons, stacked 4.57 m (15 ft) high	85	1248	110	fast
14. PE bottles, packed in item 6	85	6242	550	fast
15. PE bottles in cartons, stacked 4.57 m (15 ft) high	75	1929	170	fast
16. PE pallets, stacked 0.91 m (3 ft) high	130	—	—	fast
17. PE pallets, stacked 1.83 m–2.44 m (6 ft–8 ft) high	30–55	—	—	fast
18. PU mattress, single, horizontal	110	—	—	fast
19. PE insulation board, rigid foam, stacked 4.57 m (15 ft) high	8	1929	170	*
20. PS jars, packed in item 6	55	13,619	1200	fast
21. PS tubs nested in cartons, stacked 4.27 m (14 ft) high	105	5107	450	fast
22. PS toy parts in cartons, stacked 4.57 m (15 ft) high	110	2042	180	fast
23. PS insulation board, rigid, stacked 4.27 m (14 ft) high	7	3291	290	*
24. PVC bottles, packed in item 6	9	3405	300	*
25. PP tubs, packed in item 6	10	4426	390	*
26. PP and PE film in rolls, stacked 4.27 m (14 ft) high	40	3972	350	*
27. Distilled spirits in barrels, stacked 6.10 m (20 ft) high	23–40	—	—	*
28. Methyl alcohol	—	738	65	—
29. Gasoline	—	2270	200	—
30. Kerosene	—	2270	200	—
31. Diesel oil	—	2043	180	—

PE: Polyethylene. PS: Polystyrene. PVC: Polyvinyl chloride. PP: Polypropylene. PU: Polyurethane.
FRP: Fiberglass-reinforced polyester.

Note: The heat release rates per unit floor area are for fully involved combustibles, assuming 100 percent combustion efficiency. The growth times shown are those required to exceed 1000 Btu/sec heat release rate for developing fires, assuming 100 percent combustion efficiency.

*Fire growth rate exceeds design data.

Copyright National Fire Protection Association
Provided by IHS under license with NFPA
No reproduction or networking permitted without license from IHS
Not for Resale

Table B.2.3.2.6.2(b) Maximum Heat Release Rates from Fire Detection Institute Analysis

Materials	Approximate Values	
	kW	Btu/sec
Medium wastebasket with milk cartons	105	100
Large barrel with milk cartons	148	140
Upholstered chair with polyurethane foam	369	350
Latex foam mattress (heat at room door)	1265	1200
Furnished living room (heat at open door)	4217–8435	4000–8000

Table B.2.3.2.6.2(c) Unit Heat Release Rates for Fuels Burning in the Open

Commodity	Heat Release Rate	
	kW	Btu/sec
Flammable liquid pool	3291/m^2	290/ft^2 of surface
Flammable liquid spray	557/Lpm	2000/gpm of flow
Pallet stack	3459/m	1000/ft of height
Wood or PMMA* (vertical)		
0.6-m (2-ft) height	104/m	30/ft of width
1.8-m (6-ft) height	242/m	70/ft of width
2.4-m (8-ft) height	623/m	180/ft of width
3.7-m (12-ft) height	1038/m	300/ft of width
Wood or PMMA*		
Top of horizontal surface	715/m^2	63/ft^2 of surface
Solid polystyrene (vertical)		
0.6-m (2-ft) height	218/m	63/ft of width
1.8-m (6-ft) height	450/m	130/ft of width
2.4-m (8-ft) height	1384/m	400/ft of width
3.7-m (12-ft) height	2352/m	680/ft of width
Solid polystyrene (horizontal)	1362/m^2	120/ft^2 of surface
Solid polypropylene (vertical)		
0.6-m (2-ft) height	218/m	63/ft of width
1.8-m (6-ft) height	346/m	100/ft of width
2.4-m (8-ft) height	969/m	280/ft of width
3.7-m (12-ft) height	1626/m	470/ft of width
Solid polypropylene (horizontal)	795/m^2	70/ft^2 of surface

*Polymethyl methacrylate (Plexiglas™, Lucite™, Acrylic).
[**92B:** Table B.1, 1995.]

Table B.2.3.2.6.2(d) Characteristics of Ignition Sources

	Typical Heat Output		Burn Time[a]	Maximum Flame Height		Flame Width		Maximum Heat Flux	
	W	Btu/sec	(seconds)	mm	in.	mm	in.	kW/m^2	Btu/sec · ft^2
Cigarette 1.1 g (not puffed, laid on solid surface)									
Bone dry	5	0.0047	1200	—	—	—	—	42	3.7
Conditioned to 50% relative humidity	5	0.0047	1200	—	—	—	—	35	3.1
Methenamine pill, 0.15 g (0.0053 oz)	45	0.043	90	—	—	—	—	4	0.35
Match, wooden, laid on solid surface	80	0.076	20–30	30	1.18	14	0.092	18–20	1.59–1.76
Wood cribs, BS 5852 Part 2									
No. 4 crib, 8.5 g (0.3 oz)	1,000	0.95	190	—	—	—	—	15[d]	1.32
No. 5 crib, 17 g (0.6 oz)	1,900	1.80	200	—	—	—	—	17[d]	1.50
No. 6 crib, 60 g (2.1 oz)	2,600	2.46	190	—	—	—	—	20[d]	1.76
No. 7 crib, 126 g (4.4 oz)	6,400	6.07	350	—	—	—	—	25[d]	2.20
Crumpled brown lunch bag, 6 g (0.21 oz)	1,200	1.14	80	—	—	—	—	—	—
Crumpled wax paper, 4.5 g (0.16 oz) (tight)	1,800	1.71	25	—	—	—	—	—	—
Crumpled wax paper, 4.5 g (0.16 oz) (loose)	5,300	5.03	20	—	—	—	—	—	—
Folded double-sheet newspaper, 22 g (0.78 oz) (bottom ignition)	4,000	3.79	100	—	—	—	—	—	—
Crumpled double-sheet newspaper, 22 g (0.78 oz) (top ignition)	7,400	7.02	40	—	—	—	—	—	—
Crumpled double-sheet newspaper, 22 g (0.78 oz) (bottom ignition)	17,000	16.12	20	—	—	—	—	—	—
Polyethylene wastebasket, 285 g (10.0 oz), filled with 12 milk cartons [390 g (13.8 oz)]	50,000	47.42	200[b]	550	21.7	200	7.9	35[c]	3.08
Plastic trash bags, filled with cellulosic trash [1.2–14 kg (42.3–493 oz)][e]	120,000–350,000	113.81–331.96	200[b]	—	—	—	—	—	—

Note: Based on Table B.5.3(b) of NFPA 92B, 2005 edition.
[a]Time duration of significant flaming.
[b]Total burn time in excess of 1800 seconds.
[c]As measured on simulation burner.
[d]Measured from 25 mm away.
[e]Results vary greatly with packing density.
[**92B:** Table B.5.3(b)]

Copyright National Fire Protection Association
Provided by IHS under license with NFPA
No reproduction or networking permitted without license from IHS
Not for Resale

Table B.2.3.2.6.2(e) Furniture Heat Release Rates [3, 14, 16]

Test No.	Item/Description/Mass	Growth Time (t_g) (seconds)	Classification	Fuel Fire Intensity Coefficient (α) kW/sec^2	Fuel Fire Intensity Coefficient (α) Btu/sec^3	Virtual Time (t_v) (seconds)	Maximum Heat Release Rates kW	Maximum Heat Release Rates Btu/sec
15	Metal wardrobe, 41.4 kg (91.3 lb) (total)	50	fast	0.4220	0.4002	10	750	711
18	Chair F33 (trial love seat), 29.2 kg (64.4 lb)	400	slow	0.0066	0.0063	140	950	901
19	Chair F21, 28.15 kg (62.01 lb) (initial)	175	medium	0.0344	0.0326	110	350	332
19	Chair F21, 28.15 kg (62.01 lb) (later)	50	fast	0.4220	0.4002	190	2000	1897
21	Metal wardrobe, 40.8 kg (90.0 lb) (total) (initial)	250	medium	0.0169	0.0160	10	250	237
21	Metal wardrobe, 40.8 kg (90.0 lb) (total) (average)	120	fast	0.0733	0.0695	60	250	237
21	Metal wardrobe, 40.8 kg (90.0 lb) (total) (later)	100	fast	0.1055	0.1001	30	140	133
22	Chair F24, 28.3 kg (62.4 lb)	350	medium	0.0086	0.0082	400	700	664
23	Chair F23, 31.2 kg (68.8 lb)	400	slow	0.0066	0.0063	100	700	664
24	Chair F22, 31.2 kg (68.8 lb)	2000	slow	0.0003	0.0003	150	300	285
25	Chair F26, 19.2 kg (42.3 lb)	200	medium	0.0264	0.0250	90	800	759
26	Chair F27, 29.0 kg (63.9 lb)	200	medium	0.0264	0.0250	360	900	854
27	Chair F29, 14.0 kg (30.9 lb)	100	fast	0.1055	0.1001	70	1850	1755
28	Chair F28, 29.2 kg (64.4 lb)	425	slow	0.0058	0.0055	90	700	664
29	Chair F25, 27.8 kg (61.3 lb) (later)	60	fast	0.2931	0.2780	175	700	664
29	Chair F25, 27.8 kg (61.3 lb) (initial)	100	fast	0.1055	0.1001	100	2000	1897
30	Chair F30, 25.2 kg (55.6 lb)	60	fast	0.2931	0.2780	70	950	901
31	Chair F31 (love seat), 39.6 kg (87.3 lb)	60	fast	0.2931	0.2780	145	2600	2466
37	Chair F31 (love seat), 40.4 kg (89.1 lb)	80	fast	0.1648	0.1563	100	2750	2608
38	Chair F32 (sofa), 51.5 kg (113.5 lb)	100	fast	0.1055	0.1001	50	3000	2845
39	½ in. plywood wardrobe with fabrics, 68.5 kg (151.0 lb)	35	*	0.8612	0.8168	20	3250	3083
40	½ in. plywood wardrobe with fabrics, 68.32 kg (150.6 lb)	35	*	0.8612	0.8168	40	3500	3320
41	⅛ in. plywood wardrobe with fabrics, 36.0 kg (79.4 lb)	40	*	0.6594	0.6254	40	6000	5691
42	⅛ in. plywood wardrobe with fire-retardant interior finish (initial growth)	70	fast	0.2153	0.2042	50	2000	1897
42	⅛ in. plywood wardrobe with fire-retardant interior finish (later growth)	30	*	1.1722	1.1118	100	5000	4742
43	Repeat of ½ in. plywood wardrobe, 67.62 kg (149.08 lb)	30	*	1.1722	1.1118	50	3000	2845
44	⅛ in. plywood wardrobe with fire-retardant latex paint, 37.26 kg (82.14 lb)	90	fast	0.1302	0.1235	30	2900	2751
45	Chair F21, 28.34 kg (62.48 lb)	100	*	0.1055	0.1001	120	2100	1992
46	Chair F21, 28.34 kg (62.48 lb)	45	*	0.5210	0.4941	130	2600	2466
47	Chair, adj. back metal frame, foam cushions, 20.82 kg (45.90 lb)	170	medium	0.0365	0.0346	30	250	237
48	Easy chair CO7, 11.52 kg (25.40 lb)	175	medium	0.0344	0.0326	90	950	901
49	Easy chair F34, 15.68 kg (34.57 lb)	200	medium	0.0264	0.0250	50	200	190
50	Chair, metal frame, minimum cushion, 16.52 kg (36.42 lb)	200	medium	0.0264	0.0250	120	3000	2845
51	Chair, molded fiberglass, no cushion, 5.28 kg (11.64 lb)	120	fast	0.0733	0.0695	20	35	33
52	Molded plastic patient chair, 11.26 kg (24.82 lb)	275	medium	0.0140	0.0133	2090	700	664
53	Chair, metal frame, padded seat and back, 15.54 kg (34.26 lb)	350	medium	0.0086	0.0082	50	280	266
54	Love seat, metal frame, foam cushions, 27.26 kg (60.10 lb)	500	slow	0.0042	0.0040	210	300	285

Copyright National Fire Protection Association
Provided by IHS under license with NFPA
No reproduction or networking permitted without license from IHS
Not for Resale

Table B.2.3.2.6.2(e) *Continued*

Test No.	Item/Description/Mass	Growth Time (t_g) (seconds)	Classification	Fuel Fire Intensity Coefficient (α) kW/sec^2	Fuel Fire Intensity Coefficient (α) Btu/sec^3	Virtual Time (t_v) (seconds)	Maximum Heat Release Rates kW	Maximum Heat Release Rates Btu/sec
56	Chair, wood frame, latex foam cushions, 11.2 kg (24.69 lb)	500	slow	0.0042	0.0040	50	85	81
57	Love seat, wood frame, foam cushions, 54.6 kg (120.37 lb)	350	medium	0.0086	0.0082	500	1000	949
61	Wardrobe, ¾ in. particleboard, 120.33 kg (265.28 lb)	150	medium	0.0469	0.0445	0	1200	1138
62	Bookcase, plywood with aluminum frame, 30.39 kg (67.00 lb)	65	fast	0.2497	0.2368	40	25	24
64	Easy chair, molded flexible urethane frame, 15.98 kg (35.23 lb)	1000	slow	0.0011	0.0010	750	450	427
66	Easy chair, 23.02 kg (50.75 lb)	76	fast	0.1827	0.1733	3700	600	569
67	Mattress and box spring, 62.36 kg (137.48 lb) (later)	350	medium	0.0086	0.0082	400	500	474
67	Mattress and box spring, 62.36 kg (137.48 lb) (initial)	1100	slow	0.0009	0.0009	90	400	379

Note: For tests 19, 21, 29, 42, and 67, different power law curves were used to model the initial and the latter realms of burning. In examples such as these, engineers should choose the fire growth parameter that best describes the realm of burning to which the detection system is being designed to respond.
*Fire growth exceeds design data.

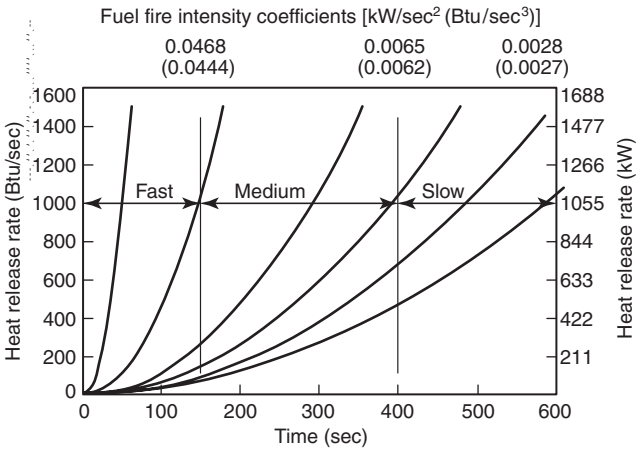

FIGURE B.2.3.2.6.2 Power Law Heat Release Rates.

B.2.3.2.6.3 Graphs of heat release data from the 40 furniture calorimeter tests can be found in *Investigation of a New Sprinkler Sensitivity Approval Test: The Plunge Test.* Best fit power law fire growth curves have been superimposed on the graphs. Data from these curves can be used with this guide to design or analyze fire detection systems that are intended to respond to similar items burning under a flat ceiling. Table B.2.3.2.6.2(e) is a summary of the data.

B.2.3.2.6.4 In addition to heat release rate data, the original NIST reports [8] contain data on particulate conversion and radiation from the test specimens. These data can be used to determine the threshold fire size (heat release rate) at which tenability becomes endangered or the point at which additional fuel packages might become involved in the fire.

B.2.3.2.6.5 The *NFPA Fire Protection Handbook* [22], SFPE *Handbook of Fire Protection Engineering*, and *Upholstered Furniture Heat Release Rates Measured with a Furniture Calorimeter* contain further information on heat release rates and fire growth rates.

B.2.3.2.6.6 Technical literature searches can be performed using a number of resources including FIREDOC, a document base of fire literature that is maintained by NIST.

B.2.3.2.6.7 A series of design fire curves are included as part of the "Fastlite" computer program available from NIST.

B.2.3.3 Develop and Evaluate Candidate Fire Detection Systems.

B.2.3.3.1 Once the design objectives, the potential fire scenarios, and the room characteristics are well understood, the designer can select an appropriate detection strategy to detect the fire before its critical fire size (Q_{CR}) is reached. Important factors to consider include the type of detector, its sensitivity to expected fire signatures, its alarm threshold level and required duration at that threshold, expected installed location (e.g., distance from fire, or below ceiling), and freedom from nuisance response to expected ambient conditions. *(See Chapter 5 and Annex A.)*

B.2.3.3.2 Reliability of the detection system and individual components should be computed and included in the selection and evaluation of the candidate fire detection system. A performance-based alternative design cannot be deemed performance-equivalent unless the alternative design provides comparable reliability to the prescriptive design it is intended to replace.

Reliability studies may be part of RAMS studies (i.e., reliability, availability, maintainability, and safety). RAMS is a tool that is used to manage dependability in "mission critical" systems. These are all factors that should be considered to ensure the system will continue to operate as designed, as well as ensure ease of and safety during maintenance.

Copyright National Fire Protection Association
Provided by IHS under license with NFPA
No reproduction or networking permitted without license from IHS
Not for Resale

The basis of RAMS is a systematic process, based on the system life cycle and tasks within it, that does the following:

(1) Assists the client to specify system requirements, in terms of dependability, from a general mission statement to availability targets for systems and subsystems, components (including software)
(2) Assesses proposed designs, using formal RAMS techniques, to see how targets are met and where objectives are not achieved
(3) Provides a means to make recommendations to designers and a system of hazard logging, to record and eventually "check off" identified necessary actions

The technical concepts of availability and reliability are based on a knowledge of and means to assess the following:

(1) All possible system failure modes in the specified application environment
(2) The probability (or rate) of occurrence of a system failure mode
(3) The cause and effect of each failure mode on the functionality of the system
(4) Efficient failure detection and location
(5) The efficient restorability of the failed system
(6) Economic maintenance over the required life cycle of the system
(7) Human factors issues regarding safety during inspection, testing, and maintenance

B.2.3.3.3 Various methods are available to evaluate whether a candidate design will achieve the previously established performance criteria. Some methods are presented in Section B.3.

B.2.3.3.4 Candidate designs developed in the context of comparison evaluation may require comparing the response of the detection system designed using a performance-based approach to that of a prescriptive-based design. It could also be evaluated against acceptance criteria previously established with applicable stakeholders.

In addition to the preceding operational and response characteristics that need to be considered, there may be limitations set on the amount of disruption, visibility, or the impact the system will have on the space in which it is to be installed. This is particularly important in heritage-type buildings where one would want these to be as unobtrusive as possible, yet not require ripping down ornate ceilings to install.

B.2.3.4 Select and Document Final Design.

B.2.3.4.1 The last step in the process is the preparation of design documentation and equipment and installation specifications.

B.2.3.4.2 These documents should encompass the following information [25]:

(1) Participants in the process — persons involved, their qualifications, function, responsibility, interest, and contributions.
(2) Scope of work — purpose of conducting the analysis or design, part of the building evaluated, assumptions, and so forth.
(3) Design approach — approach taken, where and why assumptions were made, and engineering tools and methodologies applied.
(4) Project information — hazards, risks, construction type, materials, building use, layout, existing systems, occupant characteristics, and so forth.
(5) Goals and objectives — agreed upon goals and objectives, how they were developed, who agreed to them and when.
(6) Performance criteria — clearly identify performance criteria and related objective(s), including any safety, reliability, or uncertainty factors applied, and support for these factors where necessary.
(7) Fire scenarios and design fires — description of fire scenarios used, bases for selecting and rejecting fire scenarios, assumptions, and restrictions.
(8) Design alternative(s) — describe design alternative(s) chosen, basis for selecting and rejecting design alternative(s), heat release rate, assumptions, and limitations. [This step should include the specific design objective (Q_{DO}) and the critical heat release rate (Q_{CR}) used, comparison of results with the performance criteria and design objectives, and a discussion of the sensitivity of the selected design alternative to changes in the building use, contents, fire characteristics, occupants, and so forth.]
(9) Engineering tools and methods used — description of engineering tools and methods used in the analysis or design, including appropriate references (literature, date, software version, and so forth), assumptions, limitations, engineering judgments, input data, validation data or procedures, and sensitivity analyses.
(10) Drawings and specifications — detailed design and installation drawings and specification.
(11) Test, inspection, and maintenance requirements *(see Chapter 10)*.
(12) Fire safety management concerns — allowed contents and materials in the space in order for the design to function properly, training, education, and so forth.
(13) References — software documentation, technical literature, reports, technical data sheets, fire test results, and so forth.
(14) Critical design assumptions — should include all assumptions that need to be maintained throughout the life cycle of the building so that the design functions as intended. Critical design features — should include the design features and parameters that need to be maintained throughout the life of the building so that the design functions as intended.
(15) Operations and maintenance manual — an operation and maintenance manual should be developed that clearly states the requirements for ensuring that the components of the performance-based design are correctly in place and functioning as designed. All subsystems should be identified, as well as their operation and interaction with the fire detection system. It should also include maintenance and testing frequencies, methods, and forms. The importance of testing interconnected systems should be detailed (i.e., elevator recall, suppression systems, HVAC shutdown, and so on).
(16) Inspection, testing, maintenance, and commissioning — requirements for commissioning of systems and any special procedures or test methods — should be documented as well as inspection, testing, and maintenance procedures to address the design as well as any pertinent features or systems that need to be assessed.

B.2.3.5 Management. It is important to ensure that the systems are designed, installed, commissioned, maintained, and tested on regular intervals as indicated in Chapter 10. In addition, the person conducting the testing and inspections should be aware of the background of the design and the need

Copyright National Fire Protection Association
Provided by IHS under license with NFPA
No reproduction or networking permitted without license from IHS
Not for Resale

to evaluate not only the detector and whether it operates but also be aware of changing conditions including the following:

(1) Changes in hazard being protected
(2) Location of the hazard changes
(3) Other hazards introduced into the area
(4) Ambient environment
(5) Invalidity of any of the design assumptions

B.3 Evaluation of Heat Detection System Performance.

B.3.1 General. Section B.3 provides a method for determining the application spacing for both fixed-temperature heat detectors (including sprinklers) and rate-of-rise heat detectors. This method is valid only for use when detectors are to be placed on a large, flat ceiling. It predicts detector response to a geometrically growing flaming fire at a specific fire size. This method takes into account the effects of ceiling height, radial distance between the detector and the fire, threshold fire size [critical heat release rate (Q_{CR})], rate of fire development, and detector response time index. For fixed-temperature detectors, the ambient temperature and the temperature rating of the detector are also considered. This method also allows for the adjustment of the application spacing for fixed-temperature heat detectors to account for variations in ambient temperature (T_a) from standard test conditions.

B.3.1.1 This method can also be used to estimate the fire size at which detection will occur, given an existing array of listed heat detectors installed at a known spacing, ceiling height, and ambient conditions.

B.3.1.2 The effect of rate of fire growth and fire size of a flaming fire, as well as the effect of ceiling height on the spacing and response of smoke detectors, can also be determined using this method.

B.3.1.3 The methodology contained herein uses theories of fire development, fire plume dynamics, and detector performance. These are considered the major factors influencing detector response. This methodology does not address several lesser phenomena that, in general, are considered unlikely to have a significant influence. A discussion of ceiling drag, heat loss to the ceiling, radiation to the detector from a fire, re-radiation of heat from a detector to its surroundings, and the heat of fusion of eutectic materials in fusible elements of heat detectors and their possible limitations on the design method are provided in References 4, 11, 16, and 18 in G.2.3.

B.3.1.4 The methodology in Section B.3 does not address the effects of ceiling projections, such as beams and joists, on detector response. While it has been shown that these components of a ceiling have a significant effect on the response of heat detectors, research has not yet resulted in a simplified method for quantifying this effect. The prescriptive adjustments to detector spacing in Chapter 5 should be applied to application spacings derived from this methodology. Computational fluid dynamics (CFD) programs are available and can assist in analyzing the fire and development and spread of heat and smoke, as well as the potential effects of varying ceiling configurations and characteristics including sloped and beamed ceilings.

B.3.2 Considerations Regarding Input Data.

B.3.2.1 Required Data. The following data are necessary in order to use the methods in this annex for either design or analysis.

B.3.2.1.1 Design. Data required to determine design include the following:

(1) Ceiling height or clearance above fuel (H)
(2) Threshold fire size at which response must occur (Q_d) or the time to detector response (t_d)
(3) Response time index (RTI) for the detector (heat detectors only) or its listed spacing
(4) Ambient temperature (T_a)
(5) Detector operating temperature (T_s) (heat detectors only)
(6) Rate of temperature change set point for rate-of-rise heat detectors (T_s/min)
(7) Fuel fire intensity coefficient (α) or the fire growth time (t_g)

B.3.2.1.2 Analysis. Data required to determine analysis include the following:

(1) Ceiling height or clearance above fuel (H)
(2) Response time index (RTI) for the detector (heat detectors only) or its listed spacing
(3) Actual installed spacing (S) of the existing detectors
(4) Ambient temperature (T_a)
(5) Detector operating temperature (T_s) (heat detectors only)
(6) Rate of temperature change set point for rate-of-rise heat detectors (T_s/min)
(7) Fuel fire intensity coefficient (α) or the fire growth time (t_g)

B.3.2.2 Ambient Temperature Considerations.

B.3.2.2.1 The maximum ambient temperature expected to occur at the ceiling will directly affect the choice of temperature rating for a fixed-temperature heat detector application. However, the minimum ambient temperature likely to be present at the ceiling is also very important. When ambient temperature at the ceiling decreases, more heat from a fire is needed to bring the air surrounding the detector's sensing element up to its rated (operating) temperature. This results in slower response when the ambient temperature is lower. In the case of a fire that is growing over time, lower ambient temperatures result in a larger fire size at the time of detection.

B.3.2.2.2 Therefore, selection of the minimum ambient temperature has a significant effect on the calculations. The engineer should decide what temperature to use for these calculations and document why that temperature was chosen. Because the response time of a given detector to a given fire is dependent only on the detector's time constant and the temperature difference between ambient and the detector rating, the use of the lowest anticipated ambient temperature for the space results in the most conservative design. For unheated spaces, a review of historical weather data would be appropriate. However, such data might show extremely low temperatures that occur relatively infrequently, such as every 100 years. Depending on actual design considerations, it might be more appropriate to use an average minimum ambient temperature. In any case, a sensitivity analysis should be performed to determine the effect of changing the ambient temperature on the design results.

B.3.2.2.3 In a room or work area that has central heating, the minimum ambient temperature would usually be about 20°C (68°F). On the other hand, certain warehouse occupancies might be heated only enough to prevent water pipes from freezing and, in this case, the minimum ambient temperature may be considered to be 2°C (35°F), even though, during many months of the year, the actual ambient temperature may be much higher.

Copyright National Fire Protection Association
Provided by IHS under license with NFPA
No reproduction or networking permitted without license from IHS
Not for Resale

B.3.2.3 Ceiling Height Considerations.

B.3.2.3.1 A detector ordinarily operates sooner if it is nearer to the fire. Where ceiling heights exceed 4.9 m (16 ft), ceiling height is the dominant factor in the detection system response.

B.3.2.3.2 As flaming combustion commences, a buoyant plume forms. The plume is comprised of the heated gases and smoke rising from the fire. The plume assumes the general shape of an inverted cone. The smoke concentration and temperature within the cone varies inversely as a variable exponential function of the distance from the source. This effect is very significant in the early stages of a fire, because the angle of the cone is wide. As a fire intensifies, the angle of the cone narrows and the significance of the effect of height is lessened.

B.3.2.3.3 As the ceiling height increases, a larger-size fire is necessary to actuate the same detector in the same length of time. In view of this, it is very important that the designer consider the size of the fire and rate of heat release that might develop before detection is ultimately obtained.

B.3.2.3.4 The procedures presented in this section are based on analysis of data for ceiling heights up to 9.1 m (30 ft). No data were analyzed for ceiling heights greater than 9.1 m (30 ft). In spaces where the ceiling heights exceed this limit, this section offers no guidance. [40]

B.3.2.3.5 The relationships presented here are based on the difference between the ceiling height and the height of the fuel item involved in the fire. It is recommended that the designer assume the fire is at floor level and use the actual distance from floor to ceiling for the calculations. This will yield a design that is conservative, and actual detector response can be expected to exceed the needed speed of response in those cases where the fire begins above floor level.

B.3.2.3.6 Where the designer desires to consider the height of the potential fuel in the room, the distance between the base of the fuel and the ceiling should be used in place of the ceiling height. This design option is appropriate only if the minimum height of the potential fuel is always constant and the concept is approved by the authority having jurisdiction.

B.3.2.4 Operating Temperature.

B.3.2.4.1 The operating temperature, or rate of temperature change, of the detector required for response is obtained from the manufacturer's data and is determined during the listing process.

B.3.2.4.2 The difference between the rated temperature of a fixed-temperature detector (T_s) and the maximum ambient-temperature (T_a) at the ceiling should be as small as possible. However, to reduce unwanted alarms, the difference between operating temperature and the maximum ambient temperature should be not less than 11°C (20°F). *(See Chapter 5.)*

B.3.2.4.3 If using combination detectors incorporating both fixed temperature and rate-of-rise heat detection principles to detect a geometrically growing fire, the data contained herein for rate-of-rise detectors should be used in selecting an installed spacing, because the rate-of-rise principle controls the response. The fixed-temperature set point is determined from the maximum anticipated ambient temperature.

B.3.2.5 Time Constant and Response Time Index (RTI). The flow of heat from the ceiling jet into a heat detector sensing element is not instantaneous. It occurs over a period of time. A measure of the speed with which heat transfer occurs, the thermal response coefficient is needed to accurately predict heat detector response. This is currently called the detector time constant (τ_0). The time constant is a measure of the detector's sensitivity. The sensitivity of a heat detector, τ_0 or RTI, should be determined by validated test. Research by FM Global [43,44,45] has shown that such a correlation exists and has resulted in a test method to determine RTI. Heat detectors should be listed with their RTI so that heat detector spacing can be appropriately determined for various objectives and applications. For older or existing detectors, given the detector's listed spacing and the detector's rated temperature (T_s), Table B.3.2.5, developed in part by Heskestad and Delichatsios [10], can be used to find the detector time constant.

B.3.2.6 Fire Growth Rate.

B.3.2.6.1 Fire growth varies depending on the combustion characteristics and the physical configuration of the fuels involved. After ignition, most fires grow in an accelerating pattern. Information regarding the fire growth rate for various fuels has been provided previously in this annex.

Table B.3.2.5 Time Constants (τ_0) for Any Listed Heat Detector [at a reference velocity of 1.5 m/sec (5 ft/sec)]

Listed Spacing		Underwriters Laboratories Inc.						Factory Mutual Research Corporation (All Temperatures)
m	ft	53.3°C (128°F)	57.2°C (135°F)	62.8°C (145°F)	71.1°C (160°F)	76.7°C (170°F)	91.1°C (196°F)	
3.05	10	400	330	262	195	160	97	196
4.57	15	250	190	156	110	89	45	110
6.10	20	165	135	105	70	52	17	70
7.62	25	124	100	78	48	32	—	48
9.14	30	95	80	61	36	22	—	36
12.19	40	71	57	41	18	—	—	—
15.24	50	59	44	30	—	—	—	—
21.34	70	36	24	9	—	—	—	—

Notes:
(1) These time constants are based on an analysis [10] of the Underwriters Laboratories Inc. and Factory Mutual listing test procedures.
(2) These time constants can be converted to response time index (RTI) values by using the equation $RTI = \tau_0 (5.0 \text{ ft/sec})^{1/2}$. *(Refer also to B.3.3.)*

Copyright National Fire Protection Association
Provided by IHS under license with NFPA
No reproduction or networking permitted without license from IHS
Not for Resale

B.3.2.6.2 If the heat release history for a particular fire is known, the α or t_g can be calculated using curve fitting techniques for implementation into the method detailed herein. [16]

B.3.2.6.3 In most cases, the exact fuel(s) and growth rates will not be known. Engineering judgment should therefore be used to select α or t_g that is expected to approximate the fire. Sensitivity analysis should also be performed to determine the effect on response from changes in the expected fire growth rate. In some analyses the effect on response will be negligible. Other cases might show that a more thorough analysis of potential fuels and fire scenarios is necessary.

B.3.2.7 Threshold Fire Size. The user should refer to previous sections regarding discussions on determining threshold fire sizes (Q_{DO} and Q_{CR}) to meet the design objectives.

B.3.3 Heat Detector Spacing.

B.3.3.1 Fixed-Temperature Heat Detector Spacing. The following method can be used to determine the response of fixed-temperature heat detectors for designing or analyzing heat detection systems.

B.3.3.1.1 The objective of designing a detection system is to determine the spacing of detectors required to respond to a given set of conditions and goals. To achieve the objectives, detector response must occur when the fire reaches a critical heat release rate, or in a specified time.

B.3.3.1.2 When analyzing an existing detection system, the engineer is looking to determine the size of the fire at the time that the detector responds.

B.3.3.2 Theoretical Background. [26, 28] The design and analysis methods contained in Annex B are the joint result of extensive experimental work and of mathematical modeling of the heat and mass transfer processes involved. The original method was developed by Heskestad and Delichatsios [9, 10], Beyler [4], and Schifiliti [16]. It was recently updated by Marrion [28] to reflect changes in the original correlations as discussed in work by Heskestad and Delichatsios [11] and Marrion [27]. Additional research has been conducted by FM Global [43, 44, 45]. Paragraph B.3.3.2 outlines methods and data correlations used to model the heat transfer to a heat detector, as well as velocity and temperature correlations for growing fires at the location of the detector. Only the general principles are described here. More detailed information is available in References 4, 9, 10, 16, and 28 in G.2.3.

B.3.3.3 Heat Detector Correlations. The heat transfer to a detector can be described by the following equation:

$$Q_{\text{total}} = Q_{\text{cond}} + Q_{\text{conv}} + Q_{\text{rad}} \quad \textbf{(B.8)}$$

where:
Q_{total} = total heat transfer to a detector (kW or Btu/sec)
Q_{cond} = conductive heat transfer
Q_{conv} = convective heat transfer
Q_{rad} = radiative heat transfer

B.3.3.3.1 Because detection typically occurs during the initial stages of a fire, the radiant heat transfer component (Q_{rad}) can be considered negligible. In addition, because the heat-sensing elements of most of the heat detectors are thermally isolated from the rest of the detection unit, as well as from the ceiling, it can be assumed that the conductive portion of the heat release rate (Q_{cond}) is also negligible, especially when compared to the convective heat transfer rate. Because the majority of the heat transfer to the detection element is via convection, the following equation can be used to calculate the total heat transfer:

$$Q = Q_{\text{conv}} = H_c A\left(T_g - T_d\right) \quad \textbf{(B.9)}$$

where:
Q_{conv} = convective heat transfer (kW or Btu/sec)
H_c = convective heat transfer coefficient for the detector (kW/m^2·°C or Btu/ft^2·sec·°F)
A = surface area of the detector's element (m^2 or ft^2)
T_g = temperature of fire gases at the detector (°C or °F)
T_d = temperature rating, or set point, of the detector (°C or °F)

B.3.3.3.2 Assuming the detection element can be treated as a lumped mass (m) (kg or lbm), its temperature change can be defined as follows:

$$\frac{dT_d}{dt} = \frac{Q}{mc} \quad \textbf{(B.10)}$$

where:
dT_d/dt = change in temperature of detection element (deg/sec)
Q = heat release rate (kW or Btu/sec)
m = detector element's mass (kg or lbm)
c = detector element's specific heat (kJ/kg·°C or Btu/lbm·°F)

B.3.3.3.3 Substituting this into the previous equation, the change in temperature of the detection element over time can be expressed as follows:

$$\frac{dT_d}{dt} = \frac{H_c A\left(T_g - T_d\right)}{mc} \quad \textbf{(B.11)}$$

Note that the variables are identified in Section B.7.

B.3.3.3.4 The use of a time constant (τ) was proposed by Heskestad and Smith [8] in order to define the convective heat transfer to a specific detector's heat-sensing element. This time constant is a function of the mass, specific heat, convective heat transfer coefficient, and area of the element and can be expressed as follows:

$$\tau = \frac{mc}{H_c A} \quad \textbf{(B.12)}$$

where:
m = detector element's mass (kg or lbm)
c = detector element's specific heat (kJ/kg·°C or Btu/lbm·°F)
H_c = convective heat transfer coefficient for the detector (kW/m^2·°C or Btu/ft^2·sec·°F)
A = surface area of the detector's element (m^2 or ft^2)
τ = detector time constant (seconds)

B.3.3.3.5 As seen in the equation B.12, τ is a measure of the detector's sensitivity. By increasing the mass of the detection element, the time constant, and thus the response time, increases.

Copyright National Fire Protection Association
Provided by IHS under license with NFPA
No reproduction or networking permitted without license from IHS
Not for Resale

B.3.3.3.6 Substituting into equation B.11 produces the following:

$$\frac{dT_d}{dt} = \frac{T_g - T_d}{\tau} \quad \textbf{(B.13)}$$

Note that the variables are identified in Section B.7.

B.3.3.3.7 Research has shown [24] that the convective heat transfer coefficient for sprinklers and heat detection elements is similar to that of spheres, cylinders, and so forth, and is thus approximately proportional to the square root of the velocity of the gases passing the detector. As the mass, thermal capacity, and area of the detection element remain constant, the following relationship can be expressed as the response time index (RTI) for an individual detector:

$$\tau u^{1/2} \sim \tau_0 u_0^{1/2} = \text{RTI} \quad \textbf{(B.14)}$$

where:

τ = detector time constant (seconds)
u = velocity of fire gases (m/sec or ft/sec)
u_0 = instantaneous velocity of fire gases (m/sec or ft/sec)
RTI = response time index

B.3.3.3.8 If τ_0 is measured at a given reference velocity (u_0), τ can be determined for any other gas velocity (u) for that detector. A plunge test is the easiest way to measure τ_0. It has also been related to the listed spacing of a detector through a calculation. Table B.3.2.5 presents results from these calculations [10]. The RTI value can then be obtained by multiplying τ_0 values by $u_0^{1/2}$.

B.3.3.3.9 It has become customary to refer to the time constant using a reference velocity of u_0 = 1.5 m/sec (5 ft/sec). For example, where u_0 = 1.5 m/sec (5 ft/sec), a τ_0 of 30 seconds corresponds to an RTI of 36 $\text{sec}^{1/2}/\text{m}^{1/2}$ (or 67 $\text{sec}^{1/2}/\text{ft}^{1/2}$). On the other hand, a detector that has an RTI of 36 $\text{sec}^{1/2}/\text{m}^{1/2}$ (or 67 $\text{sec}^{1/2}/\text{ft}^{1/2}$) would have a τ_0 of 23.7 seconds, if measured in an air velocity of 2.4 m/sec (8 ft/sec).

B.3.3.3.10 The following equation can therefore be used to calculate the heat transfer to the detection element and thus determine its temperature from its local fire-induced environment:

$$\frac{dT_d}{dt} = \frac{u^{1/2}\left(T_g - T_d\right)}{\text{RTI}} \quad \textbf{(B.15)}$$

Note that the variables are identified in Section B.7.

B.3.3.4 Temperature and Velocity Correlations. [26, 28] In order to predict the operation of any detector, it is necessary to characterize the local environment created by the fire at the location of the detector. For a heat detector, the important variables are the temperature and velocity of the gases at the detector. Through a program of full-scale tests and the use of mathematical modeling techniques, general expressions for temperature and velocity at a detector location have been developed by Heskestad and Delichatsios *(refer to references 4, 9, 10, and 16 in G.2.3)*. These expressions are valid for fires that grow according to the following power law relationship:

$$Q = \alpha t^p \quad \textbf{(B.16)}$$

where:

Q = theoretical convective fire heat release rate (kW or Btu/sec)
α = fire growth rate (kW/sec^2 or Btu/sec^3)
t = time (seconds)
p = positive exponent

Several other ceiling jet correlations [41] have been developed over the years that the designer should also review as to their applicability to the particular design case. Sensitivity analyses should also be conducted with the analysis.

B.3.3.4.1 Relationships have been developed by Heskestad and Delichatsios [9] for temperature and velocity of fire gases in a ceiling jet. These have been expressed as follows [26]:

$$U_p^* = \frac{u}{A^{1/(3+p)} u^{1/(3+p)} H^{(p-1)/(3+p)}} = f\left(t_p^*, \frac{r}{H}\right) \quad \textbf{(B.17)}$$

$$\Delta T_p^* = g\left(t_p^*, \frac{r}{H}\right) = \frac{\Delta T}{A^{2/(3+p)}\left(\frac{T_a}{g}\right)\alpha^{2/(3+p)} H^{-(5-p)/(3+p)}} \quad \textbf{(B.18)}$$

where:

$$t_p^* = \frac{t}{A^{-1/(3+p)}\alpha^{-1/(3+p)} H^{4/(3+p)}} \quad \textbf{(B.19)}$$

and

$$A = \frac{g}{C_p T_a \rho_0} \quad \textbf{(B.20)}$$

Note that the variables are identified in Section B.7.

B.3.3.4.2 Using the preceding correlations, Heskestad and Delichatsios [9], and with later updates from another paper by Heskestad [11], the following correlations were presented for fires that had heat release rates that grew according to the power law equation, with p = 2. As previously discussed [10, 18], the p = 2 power law fire growth model can be used to model the heat release rate of a wide range of fuels. These fires are therefore referred to as *t-squared* fires.

$$t_{2f}^* = 0.861\left(1 + \frac{r}{H}\right) \quad \textbf{(B.21)}$$

$$\Delta T_2^* = 0 \qquad \text{for } t_2^* < t_{2f}^* \quad \textbf{(B.22)}$$

$$\Delta T_2^* = \left(\frac{t_2^* - t_{2f}^*}{0.146 + 0.242 r/H}\right)^{4/3} \quad \text{for } t_2^* \geq t_{2f}^* \quad \textbf{(B.23)}$$

$$\frac{u_2^*}{\left(\Delta T_2^*\right)^{1/2}} = 0.59\left(\frac{r}{H}\right)^{-0.63} \quad \textbf{(B.24)}$$

Note that the variables are identified in Section B.7.

B.3.3.4.3 Work by Beyler [4] determined that the preceding temperature and velocity correlations could be substituted into the heat transfer equation for the detector and integrated. His analytical solution is as follows:

$$T_d(t) - T_d(0) = \left(\frac{\Delta T}{\Delta T_2^*}\right)\Delta T_2^*\left[\frac{1-\left(1-e^{-Y}\right)}{Y}\right] \quad \textbf{(B.25)}$$

$$\frac{dT_d(t)}{dt} = \frac{\left(\frac{4}{3}\right)\left(\frac{\Delta T}{\Delta T_2^*}\right)\left(\Delta T_2^*\right)^{1/4}\left(1-e^{-Y}\right)}{\left(\frac{t}{t_2^*}\right)D} \quad \textbf{(B.26)}$$

Copyright National Fire Protection Association
Provided by IHS under license with NFPA
No reproduction or networking permitted without license from IHS
Not for Resale

where:

$$Y = \left(\frac{3}{4}\right)\left(\frac{u}{u_2^*}\right)^{1/2}\left(\frac{u_2^*}{\Delta T_2^{*1/2}}\right)^{1/2}\left(\frac{\Delta T_2^*}{\text{RTI}}\right)\left(\frac{t}{t_2^*}\right)D \qquad \textbf{(B.27)}$$

and

$$D = 0.146 + 0.242 r/H \qquad \textbf{(B.28)}$$

Note that the variables are identified in Section B.7.

B.3.3.4.4 The steps involved in solving these equations for either a design or analysis situation are presented in Figure B.3.3.4.4 [28].

B.3.3.5 Limitations. [26]

B.3.3.5.1 [26] If velocity and temperature of the fire gases flowing past a detector cannot be accurately determined, errors will be introduced when calculating the response of a detector. The graphs presented by Heskestad and Delichatsios indicate the errors in the calculated fire–gas temperatures and velocities [10]. A detailed analysis of these errors is beyond the scope of this annex; however, some discussion is warranted. In using the method as previously described, the user should be aware of the limitations of these correlations, as outlined in Reference 26. The designer should also refer back to the original reports.

Graphs of actual and calculated data show that errors in T_2^* can be as high as 50 percent, although generally there appears to be much better agreement. The maximum errors occur at *r/H* values of about 0.37. All other plots of actual and calculated data, for various *r/H*, show much smaller errors. In terms of the actual change in temperature over ambient, the maximum errors are on the order of 5°C to 10°C (9°F to 18°F). The larger errors occur with faster fires and lower ceilings.

At $r/H = 0.37$, the errors are conservative when the equations are used in a design problem. That is, the equations predicted lower temperatures. Plots of data for other values of *r/H* indicate that the equations predict slightly higher temperatures.

Errors in fire–gas velocities are related to errors in temperatures. The equations show that the velocity of the fire gases is proportional to the square root of the change in temperatures of the fire gases. In terms of heat transfer to a detector, the detector's change in temperature is proportional to the change in gas temperature and the square root of the fire–gas velocity. Hence, the expected errors bear the same relationships.

Based on the preceding discussion, errors in predicted temperatures and velocities of fire gases will be greatest for fast fires and low ceilings. Sample calculations simulating these conditions show errors in calculated detector spacings on the order of plus or minus one meter, or less.

B.3.3.5.2 The procedures presented in this annex are based on an analysis of test data for ceiling heights up to 9.1 m (30 ft). No data were analyzed for ceilings greater than 9.1 m (30 ft). The reader should refer to Reference 40 for additional insight.

B.3.3.6 Design Examples.

B.3.3.6.1 Define Project Scope. A fire detection system is to be designed for installation in an unsprinklered warehouse building. The building has a large, flat ceiling that is approximately 4 m (13.1 ft) high. The ambient temperature inside is normally 10°C (50°F). The municipal fire service has indicated that it can begin putting water on the fire within 5.25 minutes of receiving the alarm.

B.3.3.6.2 Identify Goals. Provide protection of property.

B.3.3.6.3 Define Stakeholder's Objective. No fire spread from initial fuel package.

B.3.3.6.4 Define Design Objective. Prevent radiant ignition of adjacent fuel package.

B.3.3.6.5 Develop Performance Criteria. After discussions with the plant fire brigade with regard to their capability and analyzing the radiant energy levels necessary to ignite adjacent fuel packages, it was determined that the fire should be detected and suppression activities started prior to its reaching 10,000 kW (9478 Btu/sec).

B.3.3.6.6 Develop Fire Scenarios and the Design Fire. Evaluation of the potential contents to be warehoused identified the areas where wood pallets are stored to be one of the highest fire hazards.

B.3.3.6.6.1 The fire scenario involving the ignition of a stack of wood pallets will therefore be evaluated. The pallets are stored 0.5 m (1.5 ft) high. Fire test data *[see Table B.2.3.2.6.2(a)]* indicate that this type of fire follows the t^2 power law equation with a t_g equal to approximately 150 to 310 seconds. To be conservative, the faster fire growth rate will be used. Thus, using equation B.16,

$$Q = \alpha t^p$$
$$1055\ \text{kW} = \left(\alpha\ \text{kW/sec}^2\right)(150\ \text{sec})^2$$
$$\alpha = 0.047\ \text{kW/sec}^2$$

or

$$Q = \alpha t^p$$
$$1000\ \text{Btu/sec} = \left(\alpha\ \text{Btu/sec}^3\right)(150\ \text{sec})^2$$
$$\alpha = 0.044\ \text{Btu/sec}^3$$

Note that the variables are identified in Section B.7.

B.3.3.6.6.2 Using the power law growth equation with $p = 2$, the time after open flaming until the fire grows to 10,000 kW (9478 Btu/sec) can be calculated as follows:

$$Q = \left(\frac{1055}{t_c^2}\right)t_{DO}^2 = \alpha t^2 \quad (\text{for SI units}) \qquad \textbf{(B.29a)}$$

or

$$Q = \left(\frac{1000}{t_c^2}\right)t_{DO}^2 = \alpha t^2 \quad (\text{for inch-pound units}) \qquad \textbf{(B.29b)}$$

$$t_{DO} = 461\ \text{seconds}$$

Note that the variables are identified in Section B.7.

B.3.3.6.6.3 The critical heat release rate and time to detection can therefore be calculated as follows, assuming t_{respond} equals the 5.25 minutes necessary for the fire brigade to respond to the alarm and begin discharging water:

$$t_{CR} = t_{DO} - t_{\text{respond}} \qquad \textbf{(B.30)}$$

$$t_{CR} = 461 - 315 = 146\ \text{seconds}$$

and thus

$$Q_{CR} = \alpha t_{CR}^2 \qquad \textbf{(B.31)}$$

$$Q_{CR} = 1000\ \text{kW}\ (948\ \text{Btu/sec})$$

Note that the variables are identified in Section B.7.

Copyright National Fire Protection Association
Provided by IHS under license with NFPA
No reproduction or networking permitted without license from IHS
Not for Resale

Fire Detection Design and Analysis Worksheet [28]
Design Example

1.	Determine ambient temperature (T_a) ceiling height or height above fuel (H).	T_a = _____ °C + 273 = _____ K H = _____ m
2.	Determine the fire growth characteristic (α or t_g) for the expected design fire.	α = _____ kW/sec^2 t_g = _____ sec
3a.	Define the characteristics of the detectors.	T_s = _____ °C + 273 = _____ K RTI = _____ m$^{1/2}$sec$^{1/2}$ $\frac{dT_d}{dt}$ = _____ °C/min τ_0 = _____ sec
3b. or	*Design* — Establish system goals (t_{CR} or Q_{CR}) and make a first estimate of the distance (r) from the fire to the detector.	t_{CR} = _____ sec r = _____ m Q_{CR} = _____ kW
3b.	*Analysis* — Determine spacing of existing detectors and make a first estimate of the response time or the fire size at detector response ($Q = \alpha t^2$).	r = _____ *1.41 = _____ = S (m) Q = _____ kW t_d = _____ sec
4.	Using equation B.21, calculate the nondimensional time $\left(t^*_{2f}\right)$ at which the initial heat front reaches the detector.	$t^*_{2f} = 0.861\left(1 + \frac{r}{H}\right)$ t^*_{2f} =
5.	Calculate the factor A defined by the relationship for A in equation B.20.	$A = \frac{g}{C_p T_a \rho_0}$ A =
6.	Use the required response time (t_{CR}) along with the relationship for t^*_p in equation B.19 and $p = 2$ to calculate the corresponding value of t^*_2.	$t^*_2 = \frac{t_{CR}}{A^{-1/(3+p)}\alpha^{-1/(3+p)}H^{4/(3+p)}}$ t^*_2 =
7.	If $t^*_2 > t^*_{2f}$, continue to step 8. If not, try a new detector position (r) and return to step 4.	
8.	Calculate the ratio $\frac{u}{u^*_2}$ using the relationship for U^*_p in equation B.17.	$\frac{u}{u^*_2} = A^{1/(3+p)}\alpha^{1/(3+p)}H^{(p-1)/(3+p)}$ $\frac{u}{u^*_2}$ =
9.	Calculate the ratio $\frac{\Delta T}{\Delta T^*_2}$ using the relationship for ΔT^*_p in equation B.18.	$\frac{\Delta T}{\Delta T^*_2} = A^{2/(3+p)}(T_a/g)\alpha^{2/(3+p)}H^{-(5-p)/(3+p)}$ $\frac{\Delta T}{\Delta T^*_2}$ =
10.	Use the relationship for ΔT^*_2 in equation B.23 to calculate ΔT^*_2.	$\Delta T^*_2 = \left[\frac{t^*_2 - t^*_{2f}}{(0.146 + 0.242r/H)}\right]^{4/3}$ ΔT^*_2 =
11.	Use the relationship for $\frac{u^*_2}{(\Delta T^*_2)^{1/2}}$ in equation B.24 to calculate the ratio $\frac{u^*_2}{(\Delta T^*_2)^{1/2}}$.	$\frac{u^*_2}{(\Delta T^*_2)^{1/2}} = 0.59\left(\frac{r}{H}\right)^{-0.63}$ $\frac{u^*_2}{(\Delta T^*_2)^{1/2}}$ =
12.	Use the relationships for Y and D in equations B.27 and B.28 to calculate Y.	$Y = \left(\frac{3}{4}\right)\left(\frac{u}{u^*_2}\right)^{1/2}\left[\frac{u^*_2}{(\Delta T^*_2)^{1/2}}\right]^{1/2}\left(\frac{\Delta T^*_2}{\mathrm{RTI}}\right)\left(\frac{t}{t^*_2}\right)D$ Y =
13.	*Fixed Temperature HD* — Use the relationship for $T_d(t) - T_d(0)$ in equation B.25 to calculate the resulting temperature of the detector $T_d(t)$.	$T_d(t) = \left(\frac{\Delta T}{\Delta T^*_2}\right)\Delta T^*_2\left[1 - \frac{(1-e^{-Y})}{Y}\right] + T_d(0)$ $T_d(t)$ =
14.	*Rate of Rise HD* — Use the relationship for $\frac{dT_d(t)}{dt}$ in equation B.26.	$dT_d = \left[\left(\frac{4}{3}\right)\left(\frac{\Delta T}{\Delta T^*_2}\right)(\Delta T^*_2)^{1/4}\frac{(1-e^{-Y})}{[(t/t^*_2)D]}\right]dt$ dT_d =
15.	If: 1. $T_d > T_s$ 2. $T_d < T_s$ 3. $T_d = T$	Repeat Procedure Using Design: 1. a larger r; 2. a smaller r; 3. $s = 1.41 \times r$ = _____ m Analysis: 1. a larger t_r; 2. a smaller t_r; 3. t_r = _____ sec

FIGURE B.3.3.4.4 Fire Detection Design and Analysis Worksheet. [28]

--`,,```,,,,````-`-`,,`,,`,`,,`---
Copyright National Fire Protection Association
Provided by IHS under license with NFPA
No reproduction or networking permitted without license from IHS
Not for Resale

B.3.3.7 Develop Candidate Designs.

B.3.3.7.1 Fixed-temperature heat detectors have been selected for installation in the warehouse with a 57°C (135°F) operating temperature and a UL-listed spacing of 9.1 m (30 ft). From Table B.3.2.5, the time constant is determined to be 80 seconds when referenced to a gas velocity of 1.5 m/sec (5 ft/sec). When used with equation B.14, the detector's RTI can be calculated as follows:

$$\mathrm{RTI} = \tau_0 u_0^{1/2} \quad \textbf{(B.32)}$$

$$\mathrm{RTI} = 98\ \mathrm{m}^{1/2}\,\mathrm{sec}^{1/2}$$

or

$$\mathrm{RTI} = 179\ \mathrm{ft}^{1/2}\,\mathrm{sec}^{1/2}$$

B.3.3.7.2 To begin calculations, it will be necessary to make a first guess at the required detector spacing. For this example, a first estimate of 4.7 m (15.3 ft) is used. This correlates to a radial distance of 3.3 m (10.8 ft).

B.3.3.8 Evaluate Candidate Designs. These values can then be entered into the design and analysis worksheet shown in Figure B.3.3.8 in order to evaluate the candidate design.

B.3.3.8.1 After 146 seconds, when the fire has grown to 1000 kW (948 Btu/sec) and at a radial distance of 3.3 m (10.8 ft) from the center of the fire, the detector temperature is calculated to be 57°C (135°F). This is the detector actuation temperature. If the calculated temperature of the detector were higher than the actuation temperature, the radial distance could be increased. The calculation would then be repeated until the calculated detector temperature is approximately equal to the actuation temperature.

B.3.3.8.2 The last step is to use the final calculated value of r with the equation relating spacing to radial distance. This will determine the maximum installed detector spacing that will result in detector response within the established goals.

$$S = 2^{1/2} r \quad \textbf{(B.33)}$$

$$S = 4.7\ \mathrm{m}\ (15.3\ \mathrm{ft})$$

where:
S = spacing of detectors
r = radial distance from fire plume axis (m or ft)

B.3.3.8.3 The following example of analysis is provided.

B.3.3.8.3.1 The following example shows how an existing heat detection system or a proposed design can be analyzed to determine the response time or fire size at response. The scenario that was analyzed in the previous example will be used again, with the exception that the warehouse building has existing heat detectors. The fire, building, and detectors have the same characteristics as the previous example with the exception of spacing. The detectors are spaced evenly on the ceiling at 9.1 m (30 ft) intervals.

B.3.3.8.3.2 The following equation is used to determine the maximum radial distance from the fire axis to a detector:

$$S = 1.414 r \quad \textbf{(B.34)}$$

or

$$r = \frac{S}{1.414}$$

$$r = 6.5\ \mathrm{m}\ (21.2\ \mathrm{ft})$$

where:
S = spacing of detectors
r = radial distance from fire plume axis (m or ft)

B.3.3.8.3.3 Next, the response time of the detector or the fire size at response is estimated. In the preceding design, the fire grew to 1000 kW (948 Btu/sec) in 146 seconds when the detector located at a distance of 3.3 m (10.8 ft) responded. As the radial distance in this example is larger, a slower response time and thus a larger fire size at response is expected. A first approximation at the response time is made at 3 minutes. The corresponding fire size is found using the power law fire growth equation B.16 with $p = 2$ and α from B.3.3.6.6.1:

$$Q = \alpha t^p$$

$$Q = \left(0.047\ \mathrm{kW/sec}^2\right)(180\ \mathrm{sec})^2$$

$$Q = 1523\ \mathrm{kW}$$

or

$$Q = \left(0.044\ \mathrm{Btu/sec}^3\right)(180\ \mathrm{sec})^2$$

$$Q = 1426\ \mathrm{Btu/sec}$$

B.3.3.8.3.4 These data can be incorporated into the fire detection design and analysis worksheet shown in Figure B.3.3.8.3.4 in order to carry out the remainder of the calculations.

B.3.3.8.3.5 Using a radial distance of 6.5 m (21 ft) from the axis of this fire, the temperature of the detector is calculated to be 41°C (106°F) after 3 minutes of exposure. The detector actuation temperature is 57°C (135°F). Thus, the detector response time is more than the estimated 3 minutes. If the calculated temperature were more than the actuation temperature, then a smaller t would be used. As in the previous example, calculations should be repeated varying the time to response until the calculated detector temperature is approximately equal to the actuation temperature. For this example, the response time is estimated to be 213 seconds. This corresponds to a fire size at response of 2132 kW (2022 Btu/sec).

B.3.3.8.4 The preceding examples assume that the fire continues to follow the t-squared fire growth relationship up to detector activation. These calculations do not check whether this will happen, nor do they show how the detector temperature varies once the fire stops following the power law relationship. The user should therefore determine that there will be sufficient fuel, since the preceding correlations do not perform this analysis. If there is not a sufficient amount of fuel, then there is the possibility that the heat release rate curve will flatten out or decline before the heat release rate needed for actuation is reached.

B.3.3.8.5 Table B.3.3.8.5(a) through Table B.3.3.8.5(k) provide a comparison of heat release rates, response times, and spacings when variables characteristic of the fires, detectors, and room are changed from the analysis example.

B.3.3.9 Rate-of-Rise Heat Detector Spacing.

B.3.3.9.1 The preceding procedure can be used to estimate the response of rate-of-rise heat detectors for either design or analysis purposes. In this case, it is necessary to assume that the heat detector response can be modeled using a lumped mass heat transfer model.

Copyright National Fire Protection Association
Provided by IHS under license with NFPA
No reproduction or networking permitted without license from IHS
Not for Resale

Fire Detection Design and Analysis Worksheet [28]
Design Example

1.	Determine ambient temperature (T_a) ceiling height or height above fuel (H).	T_a = 10 °C + 273 = 283 K H = 4 m	
2.	Determine the fire growth characteristic (α or t_g) for the expected design fire.	α = 0.047 kW/sec^2 t_g = 150 sec	
3a.	Define the characteristics of the detectors.	T_s = 57 °C + 273 = 330 K RTI = 98 m$^{1/2}$sec$^{1/2}$ $\frac{dT_d}{dt}$ = ____ °C/min τ_0 = ____ sec	
3b. or	*Design* — Establish system goals (t_{CR} or Q_{CR}) and make a first estimate of the distance (r) from the fire to the detector.	t_{CR} = 146 sec r = 3.3 m Q_{CR} = 1000 kW	
3b.	*Analysis* — Determine spacing of existing detectors and make a first estimate of the response time or the fire size at detector response ($Q = \alpha t^2$).	r = ____ *1.41 = ____ = S (m) Q = ____ kW t_d = ____ sec	
4.	Using equation B.21, calculate the nondimensional time $\left(t^*_{2f}\right)$ at which the initial heat front reaches the detector.	$t^*_{2f} = 0.861\left(1 + \frac{r}{H}\right)$ t^*_{2f} = 1.57	
5.	Calculate the factor A defined by the relationship for A in equation B.20.	$A = \frac{g}{C_p T_a \rho_0}$ A = 0.030	
6.	Use the required response time (t_{CR}) along with the relationship for t^*_p in equation B.19 and $p = 2$ to calculate the corresponding value of t^*_2.	$t^*_2 = \frac{t_{CR}}{A^{-1/(3+p)}\alpha^{-1/(3+p)}H^{4/(3+p)}}$ t^*_2 = 12.98	
7.	If $t^*_2 > t^*_{2f}$, continue to step 8. If not, try a new detector position (r) and return to step 4.		
8.	Calculate the ratio $\frac{u}{u^*_2}$ using the relationship for U^*_p in equation B.17.	$\frac{u}{u^*_2} = A^{1/(3+p)}\alpha^{1/(3+p)}H^{(p-1)/(3+p)}$	$\frac{u}{u^*_2}$ = 0.356
9.	Calculate the ratio $\frac{\Delta T}{\Delta T^*_2}$ using the relationship for ΔT^*_p in equation B.18.	$\frac{\Delta T}{\Delta T^*_2} = A^{2/(3+p)}(T_a/g)\alpha^{2/(3+p)}H^{-(5-p)/(3+p)}$	$\frac{\Delta T}{\Delta T^*_2}$ = 0.913
10.	Use the relationship for ΔT^*_2 in equation B.23 to calculate ΔT^*_2.	$\Delta T^*_2 = \left[\frac{t^*_2 - t^*_{2f}}{(0.146 + 0.242r/H)}\right]^{4/3}$	ΔT^*_2 = 105.89
11.	Use the relationship for $\frac{u^*_2}{(\Delta T^*_2)^{1/2}}$ in equation B.24 to calculate the ratio $\frac{u^*_2}{(\Delta T^*_2)^{1/2}}$.	$\frac{u^*_2}{(\Delta T^*_2)^{1/2}} = 0.59\left(\frac{r}{H}\right)^{-0.63}$	$\frac{u^*_2}{(\Delta T^*_2)^{1/2}}$ = 0.66
12.	Use the relationships for Y and D in equations B.27 and B.28 to calculate Y.	$Y = \left(\frac{3}{4}\right)\left(\frac{u}{u^*_2}\right)^{1/2}\left[\frac{u^*_2}{(\Delta T^*_2)^{1/2}}\right]^{1/2}\left(\frac{\Delta T^*_2}{\mathrm{RTI}}\right)\left(\frac{t}{t^*_2}\right)D$	Y = 1.533
13.	*Fixed Temperature HD* — Use the relationship for $T_d(t) - T_d(0)$ in equation B.25 to calculate the resulting temperature of the detector $T_d(t)$.	$T_d(t) = \left(\frac{\Delta T}{\Delta T^*_2}\right)\Delta T^*_2\left[1 - \frac{(1-e^{-Y})}{Y}\right] + T_d(0)$	$T_d(t)$ = 57.25
14.	*Rate of Rise HD* — Use the relationship for $\frac{dT_d(t)}{dt}$ in equation B.26.	$dT_d = \left[\left(\frac{4}{3}\right)\left(\frac{\Delta T}{\Delta T^*_2}\right)(\Delta T^*_2)^{1/4}\frac{(1-e^{-Y})}{[(t/t^*_2)D]}\right]dt$	dT_d =
15.	If: 1. $T_d > T_s$ 2. $T_d < T_s$ 3. $T_d = T$	Repeat Procedure Using Design 1. a larger r 2. a smaller r 3. $s = 1.41 \times r$ = 4.7 m	Analysis 1. a larger t_r 2. a smaller t_r 3. t_r = ____ sec

FIGURE B.3.3.8 Fire Detection Design and Analysis Worksheet [28] — Design Example.

Copyright National Fire Protection Association
Provided by IHS under license with NFPA
No reproduction or networking permitted without license from IHS
Not for Resale

Fire Detection Design and Analysis Worksheet [28]
Design Analysis 2

1.	Determine ambient temperature (T_a) ceiling height or height above fuel (H).	T_a = 10 °C + 273 = 283 K H = 4 m
2.	Determine the fire growth characteristic (α or t_g) for the expected design fire.	α = 0.047 kW/sec^2 t_g = 150 sec
3a.	Define the characteristics of the detectors.	T_s = 57 °C + 273 = 330 K RTI = 98 m$^{1/2}$sec$^{1/2}$ $\frac{dT_d}{dt}$ = ____ °C/min τ_0 = ____ sec
3b. or	*Design* — Establish system goals (t_{CR} or Q_{CR}) and make a first estimate of the distance (r) from the fire to the detector.	t_{CR} = ____ sec r = ____ m Q_{CR} = ____ kW
3b.	*Analysis* — Determine spacing of existing detectors and make a first estimate of the response time or the fire size at detector response ($Q = \alpha t^2$).	r = 6.5 *1.41 = 9.2 = S (m) Q = 1,523 kW t_d = 180 sec
4.	Using equation B.21, calculate the nondimensional time $\left(t^*_{2f}\right)$ at which the initial heat front reaches the detector.	$t^*_{2f} = 0.861\left(1 + \frac{r}{H}\right)$ t^*_{2f} = 2.26
5.	Calculate the factor A defined by the relationship for A in equation B.20.	$A = \frac{g}{C_p T_a \rho_0}$ A = 0.030
6.	Use the required response time (t_{CR}) along with the relationship for t^*_p in equation B.19 and $p = 2$ to calculate the corresponding value of t^*_2.	$t^*_2 = \frac{t_{CR}}{A^{-1/(3+p)}\alpha^{-1/(3+p)}H^{4/(3+p)}}$ t^*_2 = 16
7.	If $t^*_2 > t^*_{2f}$, continue to step 8. If not, try a new detector position (r) and return to step 4.	
8.	Calculate the ratio $\frac{u}{u^*_2}$ using the relationship for U^*_p in equation B.18.	$\frac{u}{u^*_2} = A^{1/(3+p)}\alpha^{1/(3+p)}H^{(p-1)/(3+p)}$ $\frac{u}{u^*_2}$ = 0.356
9.	Calculate the ratio $\frac{\Delta T}{\Delta T^*_2}$ using the relationship for ΔT^*_p in equation B.18.	$\frac{\Delta T}{\Delta T^*_2} = A^{2/(3+p)}(T_a/g)\alpha^{2/(3+p)}H^{-(5-p)/(3+p)}$ $\frac{\Delta T}{\Delta T^*_2}$ = 0.913
10.	Use the relationship for ΔT^*_2 in equation B.23 to calculate ΔT^*_2.	$\Delta T^*_2 = \left[\frac{t^*_2 - t^*_{2f}}{(0.146 + 0.242r/H)}\right]^{4/3}$ ΔT^*_2 = 75.01
11.	Use the relationship for $\frac{u^*_2}{(\Delta T^*_2)^{1/2}}$ in equation B.24 to calculate the ratio $\frac{u^*_2}{(\Delta T^*_2)^{1/2}}$.	$\frac{u^*_2}{(\Delta T^*_2)^{1/2}} = 0.59\left(\frac{r}{H}\right)^{-0.63}$ $\frac{u^*_2}{(\Delta T^*_2)^{1/2}}$ = 0.435
12.	Use the relationships for Y and D in equations B.27 and B.28 to calculate Y.	$Y = \left(\frac{3}{4}\right)\left(\frac{u}{u^*_2}\right)^{1/2}\left[\frac{u^*_2}{(\Delta T^*_2)^{1/2}}\right]^{1/2}\left(\frac{\Delta T^*_2}{\mathrm{RTI}}\right)\left(\frac{t}{t^*_2}\right)D$ Y = 1.37
13.	*Fixed Temperature HD* — Use the relationship for $T_d(t) - T_d(0)$ in equation B.25 to calculate the resulting temperature of the detector $T_d(t)$.	$T_d(t) = \left(\frac{\Delta T}{\Delta T^*_2}\right)\Delta T^*_2\left[1 - \frac{(1-e^{-Y})}{Y}\right] + T_d(0)$ $T_d(t)$ = 41
14.	*Rate of Rise HD* — Use the relationship for $\frac{dT_d(t)}{dt}$ in equation B.26.	$dT_d = \left[\left(\frac{4}{3}\right)\left(\frac{\Delta T}{\Delta T^*_2}\right)(\Delta T^*_2)^{1/4}\frac{(1-e^{-Y})}{[(t/t^*_2)D]}\right]dt$ dT_d =
15.	If: 1. $T_d > T_s$ 2. $T_d < T_s$ 3. $T_d = T$	Repeat Procedure Using Design: 1. a larger r; 2. a smaller r; 3. $s = 1.41 \times r$ = ____ m Analysis: 1. a larger t_r; 2. a smaller t_r; 3. t_r = ____ sec

FIGURE B.3.3.8.3.4 Fire Detection Design and Analysis Worksheet [28] — Analysis Example 2.

Copyright National Fire Protection Association
Provided by IHS under license with NFPA
No reproduction or networking permitted without license from IHS
Not for Resale

Table B.3.3.8.5(a) Operating Temperature Versus Heat Transfer Rate [S = 9.1 m (30 ft)]

Operating Temperature		Heat Release Rate/ Response Time	
°C	°F	kW/sec	Btu/sec/sec
57	135	2132/213	2022/213
74	165	2798/244	2654/244
93	200	3554/275	3371/275

Table B.3.3.8.5(b) Operating Temperature Versus Spacing (Q_d = 1000 kW [948 Btu/sec)]

Operating Temperature		Spacing	
°C	°F	m	ft
57	135	4.7	15.4
74	165	3.5	11.5
93	200	2.5	8.2

Table B.3.3.8.5(c) RTI Versus Heat Release Rate [S = 9.1 m (30 ft)]

RTI		Heat Release Rate/ Response Time	
$m^{1/2}$ $sec^{1/2}$	$ft^{1/2}$ $sec^{1/2}$	kW/sec	Btu/sec/sec
50	93	1609/185	1526/185
150	280	2640/237	2504/237
300	560	3898/288	3697/288

Table B.3.3.8.5(d) RTI Versus Spacing [Q_d = 1000 kW (948 Btu/sec)]

RTI		Spacing	
$m^{1/2}$ $sec^{1/2}$	$ft^{1/2}$ $sec^{1/2}$	m	ft
50	93	6.1	20.0
150	280	3.7	12.1
300	560	2.3	7.6

Table B.3.3.8.5(e) Ambient Temperature Versus Heat Release Rate [S = 9.1 m (30 ft)]

Ambient Temperature		Heat Release Rate/ Response Time	
°C	°F	kW/sec	Btu/sec/sec
0	32	2552/233	2420/233
20	68	1751/193	1661/193
38	100	1058/150	1004/150

Table B.3.3.8.5(f) Ambient Temperature Versus Spacing [Q_d = 1000 kW (948 Btu/sec)]

Ambient Temperature		Spacing	
°C	°F	m	ft
0	32	3.8	12.5
20	68	5.7	18.7
38	100	8.8	28.9

Table B.3.3.8.5(g) Ceiling Height Versus Heat Release Rate [S = 9.1 m (30 ft)]

Ceiling Height		Heat Release Rate/ Response Time	
m	ft	kW/sec	Btu/sec/sec
2.4	8	1787/195	1695/195
4.9	16	2358/224	2237/224
7.3	24	3056/255	2899/255

Table B.3.3.8.5(h) Ceiling Height Versus Spacing [Q_d = 1000 kW (948 Btu/sec)]

Ceiling Height		Spacing	
m	ft	m	ft
2.4	8	5.8	19.0
4.9	16	4.0	13.1
7.3	24	2.1	6.9

Table B.3.3.8.5(i) Detector Spacing Versus Heat Release Rate [S = 9.1 m (30 ft)]

Detector Spacing		Heat Release Rate/ Response Time	
m	ft	kW/sec	Btu/sec/sec
4.6	15	1000/146	949/146
9.1	30	2132/213	2022/213
15.2	50	4146/297	3932/297

Table B.3.3.8.5(j) Fire Growth Rate Versus Heat Release Rate [S = 9.1 m (30 ft)]

	Heat Release Rate/ Response Time	
Fire Growth Rate	kW/sec	Btu/sec/sec
Slow t_g = 400 sec	1250/435	1186/435
Medium t_g = 250 sec	1582/306	1499/306
Fast t_g = 100 sec	2769/162	2626/162

Copyright National Fire Protection Association
Provided by IHS under license with NFPA
No reproduction or networking permitted without license from IHS
Not for Resale

Table B.3.3.8.5(k) Fire Growth Rate Versus Spacing [Q_d = 1000 kW (948 Btu/sec)]

Fire Growth Rate	Spacing	
	m	ft
Slow, t_g = 400 sec	8.2	26.9
Medium, t_g = 250 sec	6.5	21.3
Fast, t_g = 100 sec	3.7	12.1

B.3.3.9.2 In step 3 of Figure B.3.3.4.4, Figure B.3.3.8, and Figure B.3.3.8.3.4, the user must determine the rate of temperature rise (dT_d/dt) at which the detector will respond from the manufacturer's data. [Note that listed rate-of-rise heat detectors are designed to activate at a nominal rate of temperature rise of 8°C (15°F) per minute.] The user must use the relationship for $dT_d(t)/dt$ in equation B.26 instead of the relationship for $T_d(t) - T_d(0)$ in equation B.25 in order to calculate the rate of change of the detector temperature. This value is then compared to the rate of change at which the chosen detector is designed to respond.

NOTE: The assumption that heat transfer to a detector can be modeled as a lumped mass might not hold for rate-of-rise heat detectors. This is due to the operating principle of this type of detector, in that most rate-of-rise detectors operate when the expansion of air in a chamber expands at a rate faster than it can vent through an opening. To accurately model the response of a rate-of-rise detector would require modeling the heat transfer from the detector body to the air in the chamber, as well as the air venting through the hole.

B.3.3.10 Rate Compensation–Type Heat Detectors. Rate-compensated detectors are not specifically covered by Annex B. However, a conservative approach to predicting their performance is to use the fixed-temperature heat detector guidance contained herein.

B.4 Smoke Detector Spacing for Flaming Fires.

B.4.1 Introduction.

B.4.1.1 The listing investigation for smoke detectors does not yield a "listed spacing" as it does for heat detectors. Instead, the manufacturers recommend a spacing. Because the largest spacing that can be evaluated in the full-scale fire test room is 7.6 m (25 ft), it has become common practice to recommend 9.1 m (30 ft) spacing for smoke detectors when they are installed on flat, smooth ceilings. Reductions in smoke detector spacing are made empirically to address factors that can affect response, including ceiling height, beamed or joisted ceilings, and areas that have high rates of air movement.

B.4.1.2 The placement of smoke detectors, however, should be based on an understanding of fire plume and ceiling jet flows, smoke production rates, particulate changes due to aging, and the operating characteristics of the particular detector being used. The heat detector spacing information presented in Section B.3 is based on knowledge of plume and jet flows. An understanding of smoke production and aging lags considerably behind an understanding of heat production. In addition, the operating characteristics of smoke detectors in specific fire environments are not often measured or made generally available for other than a very few number of combustible materials. Therefore, the existing knowledge base precludes the development of complete engineering design information for smoke detector location and spacing.

B.4.1.3 In design applications where predicting the response of smoke detectors is not critical, the spacing criteria presented in Chapter 5 should provide sufficient information to design a very basic smoke detection system. However, if the goals and objectives established for the detection system require detector response within a certain amount of time, optical density, heat release rate, or temperature rise, then additional analysis might be needed. For these situations, information regarding the expected fire characteristics (fuel and its fire growth rate), transport characteristics, detector characteristics, and compartment characteristics is required. The following information regarding smoke detector response and various performance-based approaches to evaluating smoke detector response is therefore provided.

B.4.2 Response Characteristics of Smoke Detectors. To determine whether a smoke detector will respond to a given Q_{CR}, a number of factors need to be evaluated. These factors include smoke characteristics, smoke transport, and detector characteristics.

B.4.3 Smoke Characteristics.

B.4.3.1 Smoke characteristics are a function of the fuel composition, the mode of combustion (smoldering or flaming), and the amount of mixing with the ambient air (dilution). These factors are important for determining the characteristics of the products of combustion, such as particle size, distribution, composition, concentration, refractive index, and so on. The significance of these features with regard to smoke detector response is well documented. [29, 30]

B.4.3.2 Whether smoke detectors detect by sensing scattered light, loss of light transmission (light extinction), or reduction of ion current, they are particle detectors. Thus, particle concentration, size, color, size distribution, and so forth, affect each sensing technology differently. It is generally accepted that a flaming, well-ventilated, energetic fire produces smoke having a larger proportion of the sub-micron diameter particulates as opposed to a smoldering fire that produces smoke with a predominance of large, super-micron particulates. It is also known that as the smoke cools, the smaller particles agglomerate, forming larger ones as they age, and are carried away from the fire source. More research is necessary to provide sufficient data to allow the prediction of smoke characteristics at the source, as well as during transport. Furthermore, response models must be developed that can predict the response of a particular detector to different kinds of smoke as well as smoke that has aged during the flow from the fire to the detector location.

B.4.4 Transport Considerations.

B.4.4.1 All smoke detection relies on the plume and ceiling jet flows to transport the smoke from the locus of the fire to the detector. Various considerations must be addressed during this transport time, including changes to the characteristics of the smoke that occur with time and distance from the source, and transport time of smoke from the source to the detector.

B.4.4.2 The smoke characteristic changes that occur during transport relate mainly to the particle size distribution. Particle size changes during transport occur mainly as a result of sedimentation and agglomeration.

B.4.4.3 Transport time is a function of the characteristics of the travel path from the source to the detector. Important

Copyright National Fire Protection Association
Provided by IHS under license with NFPA
No reproduction or networking permitted without license from IHS
Not for Resale

characteristics that should be considered include ceiling height and configuration (e.g., sloped, beamed), intervening barriers such as doors and beams, as well as dilution and buoyancy effects such as stratification that might delay or prevent smoke in being transported to the detector.

B.4.4.4 In smoldering fires, thermal energy provides a force for transporting smoke particles to the smoke sensor. However, usually in the context of smoke detection, the rate of energy (heat) release is small and the rate of growth of the fire is slow. Consequently, other factors such as ambient airflow from HVAC systems, differential solar heating of the structure, and wind cooling of the structure can have a dominant influence on the transport of smoke particles to the smoke sensor when low-output fires are considered.

B.4.4.5 In the early stages of development of a growing fire, the same interior environmental effects, including ambient airflow from HVAC systems, differential solar heating of the structure, and wind cooling of the structure, can have a dominant influence on the transport of smoke. This is particularly important in spaces having high ceilings. Greater thermal energy release from the fire is necessary to overcome these interior environmental effects. Because the fire must attain a sufficiently high level of heat release before it can overcome the interior environmental airflows and drive the smoke to the ceiling-mounted detectors, the use of closer spacing of smoke detectors on the ceiling might not significantly improve the response of the detectors to the fire. Therefore, when considering ceiling height alone, smoke detector spacing closer than 9.1 m (30 ft) might not be warranted, except in instances where an engineering analysis indicates additional benefit will result. Other construction characteristics also should be considered. *(Refer to the appropriate sections of Chapter 5 dealing with smoke detectors and their use for the control of smoke spread.)*

B.4.5 Smoke Dilution. Smoke dilution causes a reduction in the quantity of smoke per unit of air volume of smoke reaching the detector. Dilution typically occurs either by entrainment of air in the plume or the ceiling jet or by effects of HVAC systems. Forced ventilation systems with high air change rates typically cause the most concern, particularly in the early stages of fire development, when smoke production rate and plume velocity are both low. Airflows from supply as well as return vents can create defined air movement patterns within a compartment, which can either keep smoke away from detectors that are located outside of these paths or can inhibit smoke from entering a detector that is located directly in the airflow path. [26]

There currently are no quantitative methods for estimating either smoke dilution or airflow effects on locating smoke detectors. These factors should therefore be considered qualitatively. The designer should understand that the effects of airflow become larger as the fire size at detection (Q_{CR}) gets smaller. Depending on the application, the designer might find it useful to obtain airflow and velocity profiles within the room or to even conduct small-scale smoke tests under various conditions to assist in the design of the system.

B.4.6 Stratification.

B.4.6.1 The potential for the stratification of smoke is another concern in designing and analyzing the response of detectors. This is of particular concern with the detection of low-energy fires and fires in compartments with high ceilings.

B.4.6.2 The upward movement of smoke in the plume depends on the smoke being buoyant relative to the surrounding air. Stratification occurs when the smoke or hot gases flowing from the fire fail to ascend to the smoke detectors mounted at a particular level (usually on the ceiling) above the fire due to the loss of buoyancy. This phenomenon occurs due to the continuous entrainment of cooler air into the fire plume as it rises, resulting in cooling of the smoke and fire plume gases. The cooling of the plume results in a reduction in buoyancy. Eventually the plume cools to a point where its temperature equals that of the surrounding air and its buoyancy diminishes to zero. Once this point of equilibrium is reached, the smoke will cease its upward flow and form a layer, maintaining its height above the fire, regardless of the ceiling height, unless and until sufficient additional thermal energy is provided from the fire to raise the layer due to its increased buoyancy. The maximum height to which plume fluid (smoke) will ascend, especially early in the development of a fire, depends on the convective heat release rate of the fire and the ambient temperature in the compartment.

B.4.6.3 Because warm air rises, there will usually be a temperature gradient in the compartment. Of particular interest are those cases where the temperature of the air in the upper portion of the compartment is greater than at the lower level before the ignition. This can occur as a result of solar load where ceilings contain glazing materials. Computational methods are available to assess the potential for intermediate stratification for the following two cases, depicted in Figure B.4.6.3(a).

Case 1. The temperature of the ambient is relatively constant up to a height above which there is a layer of warm air at uniform temperature. This situation can occur if the upper portion of a mall, atrium, or other large space is unoccupied and the air is left unconditioned.

Case 2. The ambient interior air of the compartment has a constant and uniform temperature gradient (temperature change per unit height) from floor to ceiling. This case is generally encountered in industrial and storage facilities that are normally unoccupied.

The analysis of intermediate stratification is presented in Figure B.4.6.3(b). Plume centerline temperatures from two fires, 1000 kW (948 Btu/sec) and 2000 kW (1896 Btu/sec), are graphed based on estimates from correlations presented in this section. In Case 1, a step function is assumed to indicate a 30°C/m (16.5°F/ft) change in temperature 15 m (49.2 ft) above the floor due to the upper portion of the atrium being unconditioned. For Case 2, a temperature gradient of 1.5°C/m (0.82°F/ft) is arbitrarily assumed in an atrium that has a ceiling height of 20 m (65.6 ft).

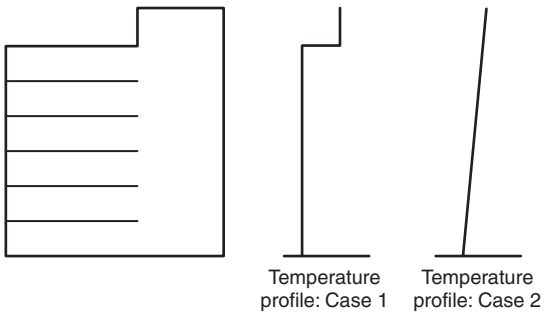

FIGURE B.4.6.3(a) Pre-Fire Temperature Profiles.

Copyright National Fire Protection Association
Provided by IHS under license with NFPA
No reproduction or networking permitted without license from IHS
Not for Resale

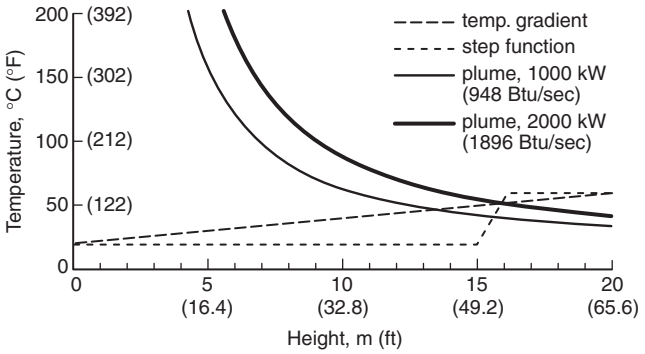

FIGURE B.4.6.3(b) Indoor Air and Plume Temperature Profiles with Potential for Intermediate Stratification.

B.4.6.3.1 Step Function Temperature Gradient Spaces. If the interior air temperature exhibits a discrete change at some elevation above the floor, the potential for stratification can be assessed by applying the plume centerline temperature correlation. If the plume centerline temperature is equal to the ambient temperature, the plume is no longer buoyant, loses its upward momentum, and stratifies at that height. The plume centerline temperature can be calculated by using the following equation:

$$T_c = 25\,Q_c^{2/3} z^{-5/3} + 20 \quad \text{(for SI units)} \qquad \textbf{(B.35a)}$$

$$T_c = 316\,Q_c^{2/3} z^{-5/3} + 70 \quad \text{(for inch-pound units)} \qquad \textbf{(B.35b)}$$

where:

T_c = plume centerline temperature (°C or °F)
Q_c = convective portion of fire heat release rate (kW or Btu/sec)
z = height above the top of the fuel package involved (m or ft)

B.4.6.3.2 Linear Temperature Gradient Spaces. To determine whether or not the rising smoke or heat from an axisymmetric fire plume will stratify below detectors, the following equation can be applied where the ambient temperature increases linearly with increasing elevation:

$$Z_m = 5.54\,Q_c^{1/4}\left(\frac{\Delta T_0}{dZ}\right)^{-3/8} \quad \text{(for SI units)} \qquad \textbf{(B.36a)}$$

or

$$Z_m = 14.7\,Q_c^{1/4}\left(\frac{\Delta T_0}{dZ}\right)^{-3/8} \quad \text{(for inch-pound units)} \qquad \textbf{(B.36b)}$$

where:

Z_m = maximum height of smoke rise above the fire surface (m or ft)
ΔT_0 = difference between the ambient temperature at the location of detectors and the ambient temperature at the level of the fire surface (°C or °F)
Q_c = convective portion of the heat release rate (kW or Btu/sec)

B.4.6.3.2.1 The convective portion of the heat release rate (Q_c) can be estimated as 70 percent of the heat release rate.

B.4.6.3.2.2 As an alternative to using the noted expression to directly calculate the maximum height to which the smoke or heat will rise, Figure B.4.6.3.2.2 can be used to determine Z_m for given fires. Where Z_m, as calculated or determined graphically, is greater than the installed height of detectors, smoke or heat from a rising fire plume is predicted to reach the detectors. Where the compared values of Z_m and the installed height of detectors are comparable heights, the prediction that smoke or heat will reach the detectors might not be a reliable expectation.

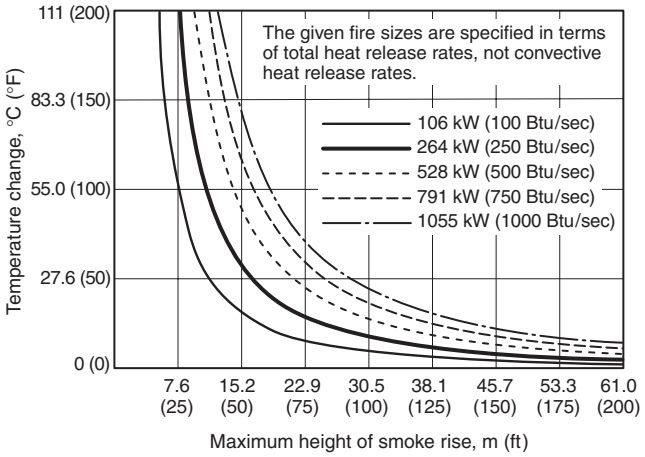

FIGURE B.4.6.3.2.2 Temperature Change and Maximum Height of Smoke Rise for Given Fire Sizes.

B.4.6.3.2.3 Assuming the ambient temperature varies linearly with the height, the minimum Q_c required to overcome the ambient temperature difference and drive the smoke to the ceiling ($Z_m = H$) can be determined from the following equation:

$$Q_c = 0.0018 H^{5/2} \Delta T_0^{3/2} \quad \text{(for SI units)} \qquad \textbf{(B.37a)}$$

or

$$Q_c = 2.39\times10^{-5} H^{5/2} \Delta T_0^{3/2} \quad \text{(for inch-pound units)} \qquad \textbf{(B.37b)}$$

Note that the variables are identified in Section B.7.

B.4.6.3.2.4 The theoretical basis for the stratification calculation is based on the works of Morton, Taylor, and Turner [15] and Heskestad [9]. For further information regarding the derivation of the expression defining Z_m, the user is referred to the work of Klote and Milke [13] and NFPA 92B, *Standard for Smoke Management Systems in Malls, Atria, and Large Spaces.*

B.4.7 Detector Characteristics.

B.4.7.1 General. Once smoke is transported to the detector, additional factors become important in determining whether response will occur. These include the aerodynamic characteristics of the detector and the type of sensor within the detector. The aerodynamics of the detector relate to how easily smoke can pass through the detector housing and enter the sensor portion of the unit. Additionally, the location of the entry portion to the sensor with respect to the velocity profile of the ceiling jet is also an important factor. Finally, different sensing methods (e.g., ionization or photoelectric) will respond differently, depending on the smoke characteristics (smoke color, particle size, optical density, and so forth). Within the family of photoelectric devices, there will be variations depending on the wavelengths of light and the scattering

Copyright National Fire Protection Association
Provided by IHS under license with NFPA
No reproduction or networking permitted without license from IHS
Not for Resale

angles employed. The following paragraphs discuss some of these issues and various calculation methods.

B.4.7.2 Resistance to Smoke Entry.

B.4.7.2.1 All spot-type smoke detectors require smoke to enter the detection chamber in order to be sensed. This requires additional factors to be taken into consideration when attempting to estimate smoke detector response, as smoke entry into the detection chamber can be affected in several ways, for example, insect screens, sensing chamber configuration, and location of the detector with respect to the ceiling.

B.4.7.2.2 In trying to quantify this, Heskestad [32] developed the idea of smoke detector lag to explain the difference in optical density outside (D_{ur}) versus inside (D_{uo}) of a detector when the detector activates. It was demonstrated that this difference could be explained by the use of a correction factor D_{uc} using the following relationship:

$$D_{uc} = \frac{L\dfrac{d(D_u)}{dt}}{V} \qquad \textbf{(B.38)}$$

where:

L = characteristic length for a given detector design, represents the ease of smoke entry into the sensing chamber
$d(D_u)/dt$ = rate of increase of optical density outside the detector
V = velocity of the smoke at the detector

B.4.7.2.3 Various studies regarding this correlation have provided additional insight regarding smoke entry and associated lags [33, 34]; however, the difficulty in quantifying L for different detectors and relating it to spacing requirements can have limited usefulness, and the concept of critical velocity (u_c) could be more applicable. [21]

B.4.7.3 Critical Velocity. A smoke detector's critical velocity refers to the minimum velocity of the smoke necessary to enter the sensing chamber to cause an alarm without significant delays due to smoke entry lag. Alarms may occur at velocities less than the critical velocity value, but their response may be delayed or require greater smoke concentrations than would normally be necessary. Flow across a detector causes a pressure differential between the upstream and downstream sides of the detector. This pressure differential is the principal driving force for the smoke entering the unit.

Experimental work has indicated that the critical velocity is approximately 0.15 m/sec (0.49 ft/sec) for the ionization detectors tested in one particular study. [21] Once velocities were reduced below this level, the smoke concentration level outside the detector before an alarm condition increased dramatically when compared to smoke concentration levels when the velocity was above the critical value. Another study found that measured velocities at the time of alarm for ionization and photoelectric detectors in full-scale flaming fire tests generally supported this velocity value, with a mean value of 0.13 m/sec (0.43 ft/sec) and a standard deviation of 0.07 m/sec (0.23 ft/sec) [46]. Estimating the critical velocity can therefore be useful for design and analysis.

It is interesting to note that this critical velocity value (0.15 m/sec or 0.49 ft/sec) is close to that at which a smoke detector must respond in the UL smoke detector sensitivity chamber in order to become listed. [35] The location in the ceiling jet where this velocity occurs for a given fire and ceiling height might therefore be considered as a first approximation for locating detectors. This again assumes a horizontal, smooth ceiling. Care should also be taken when using this correlation, such that consideration is given to potential effects of coagulation and agglomeration, and settling of the smoke within the ceiling jet as it moves away from the fire source and loses its buoyancy. The velocity for smoke entry might be present, but the concentration of smoke might not be sufficient to activate the detector.

B.4.7.4 Response to Smoke Color. Smoke detectors that use an optical means to detect smoke respond differently to smokes of different colors.

B.4.7.4.1 Manufacturers currently provide limited information regarding the response of smoke detectors in their specifications as well as in the information contained on the labels on the backs of the detectors. This response information indicates only their nominal response values with respect to gray smoke, not to black, and is often provided with a response range instead of an exact response value. This range is in accordance with ANSI/UL 268, *Standard for Safety, Smoke Detectors for Fire Alarm Signaling Systems.*

B.4.7.4.2 The response ranges allowable by UL for gray smoke are shown in Table B.4.7.4.2. Older editions of ANSI/UL 268 contained response ranges for black smoke and are also shown for comparison.

Table B.4.7.4.2 ANSI/UL 268 Smoke Detector Test Acceptance Criteria for Different Colored Smoke [35]

Color of Smoke	Acceptable Response Range	
	%/m	%/ft
Gray	1.6 to 12.5	0.5 to 4.0
Black	5.0 to 29.2	1.5 to 10.0

B.4.7.4.3 Detectors respond at different optical density levels to different fuels and different types of smoke. Examples of this are shown in Table B.4.7.4.3, which contains values of optical density at response recommended by Heskestad and Delichatsios [10] based on their test.

Note the large variations in response not only to materials producing relatively the same color of smoke but also to smoke of different color, which is much more pronounced. Also note that there was variation in the optical density at response values for a given material in the test conducted by Heskestad and Delichatsios, which is not shown in Table B.4.7.4.3. The values cited in Table B.4.7.4.3 are provided as an example of the variation in optical density at response, but these values are not necessarily appropriate for all analyses. For example, the results presented for polyurethane and PVC involved relatively large, rapidly developing fires, and fires with smaller growth rates could result in smaller values of optical density at response [10]. More information on the variation of optical density at response is available from Geiman and Gottuk [48] and Geiman [46].

B.4.7.5 Optical Density and Temperature. During a flaming fire, smoke detector response is affected by ceiling height and

--`,,```,,,,````-`-`,,`,,`,`,,`---

Copyright National Fire Protection Association
Provided by IHS under license with NFPA
No reproduction or networking permitted without license from IHS
Not for Resale

Table B.4.7.4.3 Values of Optical Density at Response for Flaming Fires [18]

Material	Optical Density at Response $D_{ur}(m^{-1})$ Ionization	$D_{ur}(m^{-1})$ Photoelectric	$D_{ur}(ft^{-1})$ Ionization	$D_{ur}(ft^{-1})$ Photoelectric	Relative Smoke Color
Wood crib	0.016	0.049	0.005	0.015	Light
Cotton fabric	0.002	0.026	0.0005	0.008	Light
Polyurethane foam	0.164	0.164	0.05	0.05	Dark
PVC	0.328	0.328	0.1	0.1	Dark
Variation			200:1	12.5:1	

Table B.4.7.5.1 Ratio of Optical Density to Temperature Rise

Material	$D_u/\Delta T$ [(m°C)$^{-1}$] Representative Value	$D_u/\Delta T$ [(m°C)$^{-1}$] Value Range	$D_u/\Delta T$ [(ft°F)$^{-1}$] Representative Value	$D_u/\Delta T$ [(ft°F)$^{-1}$] Value Range	Maximum: Minimum
Wood (sugar pine, 5% moist)	1.20E-03	8.9E-4 – 3.2E-3	2.00E-04	1.5E – 5.5E-4	3.7:1
Cotton (unbleached muslin fabric)	5.9E-4/1.2E-3	3.0E-4 – 1.8E-3	1.0E-04/2.0–4	5.0E-5 – 3.0E-4	6:1
Paper (in trashcan)	1.80E-03	Data not available	3.00E-04	Data not available	—
Polyurethane foam	2.40E-03	1.2E-2 – 3.2E-2	4.00E-04	2.0E-3 – 5.5E-3	2.8:1
Polyester fiber (bed pillow)	1.80E-02	Data not available	5.0E-3/1.0E-2	Data not available	—
PVC (wire insulation)	3.0E-2/5.9E-2	5.9E-3 – 5.9E-2	3.00E-03	1.0E-3 – 1.0E-2	10:1
Foam rubber PU (sofa cushion)	7.70E-02	Data not available	1.30E-02	Data not available	—
Average	2.10E-02	3.0E-4 – 7.7E-2	3.60E-03	5.0E-05 – 1.3E-2	260:1

the size and rate of fire growth in much the same way as heat detector response. The thermal energy of the flaming fire transports smoke particles to the sensing chamber just as it does heat to a heat sensor. While the relationship between the amount of smoke and the amount of heat produced by a fire is highly dependent on the fuel and the way it is burning, research has shown that the relationship between temperature and the optical density of smoke remains somewhat constant within the fire plume and on the ceiling in the proximity of the plume.

B.4.7.5.1 These results were based on the work by Heskestad and Delichatsios [10] and are indicated in Table B.4.7.5.1. Note that for a given fuel, the optical density to temperature rise ratio between the maximum and minimum levels is 10 or less.

B.4.7.5.2 In situations where the optical density at detector response is known and is independent of particle size distribution, the detector response can be approximated as a function of the heat release rate of the burning fuel, the fire growth rate, and the ceiling height, assuming that the preceding correlation exists.

B.4.7.5.3 When Appendix C of NFPA 72E (no longer in print) was first published in 1984, a 13°C (20°F) temperature rise was used to indicate detector response. Schifiliti and Pucci [18] have combined some of the data from Heskestad and Delichatsios [10] to produce Table B.4.7.5.3 showing the temperature rise at detector response. Note that the temperature rise associated with detector response varies significantly depending on the detector type and fuel.

Also note that the values in Table B.4.7.5.3 are not based on temperature measurements taken at the detector response times, but were calculated by Heskestad and Delichatsios [10] from their recommended values of optical density at response (Table B.4.7.4.3) and their recommended ratios of optical density to temperature rise (Table B.4.7.5.1).

Table B.4.7.5.3 Temperature Rise for Detector Response [18]

Material	Ionization Temperature Rise °C	Ionization Temperature Rise °F	Scattering Temperature Rise °C	Scattering Temperature Rise °F
Wood	13.9	25	41.7	75
Cotton	1.7	3	27.8	50
Polyurethane	7.2	13	7.2	13
PVC	7.2	13	7.2	13
Average	7.8	14	21.1	38

Copyright National Fire Protection Association
Provided by IHS under license with NFPA
No reproduction or networking permitted without license from IHS
Not for Resale

Several experimental studies have cited temperature rises at detection as low as 1°C to 3°C (1.8°F to 5.4°F). Of particular note, Geiman [46] found that for flaming fires, 80 percent of the ionization detectors examined in full-scale smoke detection tests alarmed at measured temperature rises less than or equal to 3°C (5.4°F).

B.4.8 Methods for Estimating Smoke Detector Response.

B.4.8.1 General. There are various methods to estimate smoke detector response. Research is still needed in this area to reflect smoke production, transport to the detector, response of the detector, and performance metrics of the smoke detector. Designers should be aware of the advantages and disadvantages, as well as limitations, of these methods and undertake sensitivity analyses and use of multiple methods where applicable.

B.4.8.1.1 Method 1 — Optical Density Versus Temperature.

B.4.8.1.2 It is intended to determine whether an existing fire detection system can detect a fire in part of a warehouse used to store wardrobes in sufficient time to prevent radiant ignition of adjacent wardrobes. The area under review has a large, flat ceiling, 5 m (16.5 ft) high. The ambient temperature within the compartment is 20°C (68°F). The compartment is not sprinklered. The wardrobes are constructed mainly of particleboard. The detectors are ionization-type smoke detectors spaced 6.1 m (20 ft) on center. The design objective is to keep the maximum heat release rate (Q_{DO}) below 2 MW (1897 Btu/sec) in order to ensure that radiant ignition of the wardrobes in the adjacent aisle will not occur. There is an on-site fire brigade that can respond to and begin discharging water on the fire within 90 seconds of receiving the alarm. It can be assumed that there are no other delays between the time the detector reaches its operating threshold and the time to notification of the fire brigade. Given this information, would the existing system be sufficient?

B.4.8.1.3 The following assumptions are made for this example:

$$\alpha = 0.047 \text{ kW/sec}^2 \quad \left(0.044 \text{ Btu/sec}^3\right)$$

$$\text{RTI} = 25 \text{ m}^{1/2}\text{sec}^{1/2} \quad \left(45 \text{ ft}^{1/2}\text{sec}^{1/2}\right)$$

Temperature rise for response = 14°C (25°F)

Refer to Table B.4.7.5.3 for temperature rise to response of an ionization smoke detector for a wood fire.

B.4.8.1.4 Using the power law equation, the design objective response time is calculated as follows:

$$Q_{DO} = \alpha t_{DO}^2 \tag{B.39}$$

$$2000 \text{ kW} = 0.047 \text{ kW/sec}^2 \, (t_{DO}^2)$$

$$t_{DO} = 210 \text{ sec}$$

or

$$1897 \text{ Btu/sec} = 0.044 \text{ Btu/sec}^3 \, (t_{DO}^2)$$

$$t_{DO} = 210 \text{ sec}$$

B.4.8.1.5 Next, subtract the time for the fire brigade to respond to determine what time after ignition that detection should occur. Note that a 30-second safety factor has been added to the fire brigade's response time.

$$t_{CR} = 210 \text{ sec} - 120 \text{ sec} = 90 \text{ sec} \tag{B.40}$$

B.4.8.1.6 Then calculate the critical heat release rate at which detection should occur as follows:

$$Q_{CR} = \alpha t_{CR}^2 \tag{B.41}$$

$$Q_{CR} = 0.047 \text{ kW/sec}^2 \left(90 \text{ sec}\right)^2 = 380 \text{ kW}$$

or

$$Q_{CR} = 0.044 \text{ Btu/sec}^3 \left(90 \text{ sec}\right)^2 = 360 \text{ Btu/sec}$$

B.4.8.1.7 Using the numbers in the fire detection design and analysis worksheet at 90 seconds into the fire when the heat release rate is 380 kW (360 Btu/sec), the temperature rise at the detector is calculated to be approximately 17°C (30.6°F). This, therefore, might be a reasonable approximation to show that the detector may respond.

B.4.8.2 Method 2 — Mass Optical Density.

B.4.8.2.1 Data regarding smoke characteristics for given fuels can be used as another method to evaluate detector response.

B.4.8.2.2 The following example is provided.

The design objective established for this scenario is to detect the smoke from a flaming 400 g (1.0 lb) polyurethane chair cushion in less than 2 minutes. The chair is placed in a compartment that is 40 m^2 (431 ft^2). The ceiling height is 3.0 m (10 ft). It has been determined that the burning rate of the cushion is a steady rate of 50 g/min (0.09 lb/min). Determine whether the design objective will be met.

B.4.8.2.3 The total mass loss of the cushion due to combustion at 2 minutes is 100 g (0.22 lb). Therefore, the optical density in the room produced by the burning cushion can be calculated from the following equation: [5]

$$D = \frac{D_m M}{V_c} \tag{B.42}$$

where:
D_m = mass optical density (m^2/g) [26]
M = mass (g)
V_c = volume of the compartment
D = $[(0.22 \text{ m}^2/\text{g})(100 \text{ g})]/(40 \text{ m}^2)(3 \text{ m}) = 0.183 \text{ m}^{-1}$

or

where:
D_m = mass optical density (ft^2/lb) [26]
M = mass (lb)
V_c = volume of the compartment
D = $[(1075 \text{ ft}^2/\text{lb})(0.22 \text{ lb})]/(431 \text{ ft}^2)(9.8 \text{ ft}) = 0.056 \text{ ft}^{-1}$

B.4.8.2.4 If it is assumed that the detector responds at an optical density of 0.15 m^{-1} (0.046 ft^{-1}), the maximum black smoke optical density allowed in a previous edition of the ANSI/UL 268 sensitivity test [35], it can be assumed that the detector will respond within 2 minutes.

B.4.8.2.5 It should be noted that this method presents a very simplified approach, and that various assumptions would need to be made including that the smoke is confined to the room, is well mixed, can reach the ceiling, and can enter the detector.

Copyright National Fire Protection Association
Provided by IHS under license with NFPA
No reproduction or networking permitted without license from IHS
Not for Resale

B.4.8.2.6 The preceding estimation assumes that the smoke is evenly distributed throughout the entire compartment volume. This is rarely the case but establishes a very conservative limit. For design purposes one can model the smoke layer as a cylindrical volume centered about the fire plume having a depth equivalent to the ceiling jet thickness or some multiple of it. Refer to Figure B.4.8.2.6.

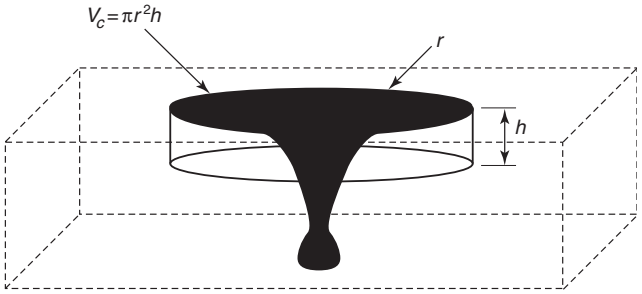

FIGURE B.4.8.2.6 Smoke Layer Volume Model.

The volume of the cylinder can now be used as the solution volume:

$$D = \frac{D_m M}{V_c} \tag{B.43}$$

is used with the substitution of

$$V_c = \pi r^2 h \tag{B.44}$$

To obtain the maximum radius from the fire plume centerline at which detector response is expected, the nominal 0.14 m^{-1} optical density criterion is substituted into the relation and an explicit relation for r is obtained,

$$r = \left(\frac{D_m M}{0.14 \pi h} \right)^{1/2} \tag{B.45}$$

Note that the results of this calculation are highly dependent upon the assumed layer thickness, h. The designer must carefully document the value used for the ceiling jet thickness for this reason. This method does not assume any minimum velocity across the detector, nor does it provide for any delay due to smoke entry. Finally, it assumes uniform smoke concentration throughout the solution volume. Failure to use prudently selected values for ceiling jet thickness and use of this relation outside the limitations imposed by the assumptions can lead to invalid designs.

B.4.8.2.7 The mass optical density method also enables the engineer to analyze existing systems. When we accept the assumption that smoke detectors listed by UL will respond at an optical density of 0.14 m^{-1}, we can write the relation:

$$D_A = 0.14 = \frac{D_m M}{V_c} \tag{B.46}$$

and thus

$$M = D_A \pi r^2 h / D_m \tag{B.47}$$

for a cylindrical solution volume.

Since $H(t) = M \Delta H_c$ and $H(t) = (\alpha t^3)/3$, we can write the relation

$$M = \frac{\left(\alpha t^3\right)}{3 \Delta H_c} \tag{B.48}$$

Substituting, this leads to the relation

$$\frac{\left(\alpha t^3\right)}{3 \Delta H_c} = \frac{D_A \pi r^2 h}{D_m} \tag{B.49}$$

This relation is reorganized to be explicit in t,

$$t = \left(\frac{3 D_A \pi r^2 h \Delta H_c}{\alpha D_m} \right)^{1/3} \tag{B.50}$$

This time estimate must be corrected for the lag time produced by the resistance to smoke entry of the detector. Currently, this time delay, which is a function of detector design and ceiling jet velocity, is not quantified in the listing process. Consequently, the engineer must make an estimate of the time delay due to smoke entry, t_e. Thus, the response time estimate becomes:

$$t = \left(\frac{3 D_A \pi r^2 h \Delta H_c}{\alpha D_m} \right)^{1/3} + t_e \tag{B.51}$$

This relation predicts the time at which the mass optical density attains the detector alarm threshold in the solution volume derived from the detector spacing and an assumed ceiling jet thickness. Again, the results of this calculation are highly dependent upon the assumed ceiling jet layer thickness. However, once time, t, is known, if the fire can be characterized as a t-square fire, the fire size can be calculated from the relation

$$Q = \alpha t^2 \tag{B.52}$$

Consequently, substitution of this relation into the preceding relation yields the final analytical relation for the heat release rate at alarm, Q_a:

$$Q_a = \alpha \left[\left(\frac{3 D_A \pi r^2 h \Delta H_c}{\alpha D_m} \right)^{1/3} + t_e \right]^2 \tag{B.53}$$

This relation provides an estimate of detector response subject to the assumptions and values selected or the relevant parameters. The estimate can be no better than the data used to generate it.

B.4.8.3 Critical Velocity Method. Research shows that a minimum critical velocity is necessary before smoke can enter the sensing chamber of the smoke detector. *(See B.4.7.3.)* This method assumes that, if this critical velocity has been attained, sufficient smoke concentration is in the ceiling jet gas flow to produce an alarm signal. Ceiling jet velocity correlations exist for steady-state fires, not t-square fires. However, a t-square fire can be modeled as a succession of steady-state fires for slow and medium growth rate fires. In the UL smoke box test, the minimum flow velocity at the detector is 0.152 m/sec (30 ft/minute). The correlation

$$\frac{0.195 \left(Q^{1/3} H^{1/2} \right)}{r^{5/6}} \qquad \text{for } r/h \geq 0.15 \tag{B.54}$$

is used. U_r is set to equal 0.152 m/sec. With this substitution the relation becomes:

$$r \leq \left(1.28 Q_c^{1/3} H^{1/2} \right)^{6/5} \tag{B.55}$$

Copyright National Fire Protection Association
Provided by IHS under license with NFPA
No reproduction or networking permitted without license from IHS
Not for Resale

This relation is solved to obtain the maximum distance between the fire plume centerline and the detector at which the critical jet velocity is expected to be obtained for the given convective heat release rate and ceiling height.

B.4.9 Projected Beam Smoke Detection.

B.4.9.1 Projected beam smoke detection is often used in large open spaces with high ceilings where the use of spot-type detectors is impractical due to the problems of smoke stratification. In these spaces, there is questionable basis for the use of the prescriptive spacings presented in Section 5.7. However, beams can be installed such that, regardless of the fire origin, the plume will intersect at least one beam. To employ this strategy, the plume divergence is calculated as a function of the altitude at which the projected beam detectors are installed. The region of relatively uniform temperature and smoke density in a buoyant plume diverges at an angle of approximately 22 degrees, as shown in Figure B.4.9.1.

Another method involves assessing the smoke obstruction through the plume to determine the reduction in light from the receiver to the transmitter of the beam-type smoke detector to determine whether the detector may respond. [47]

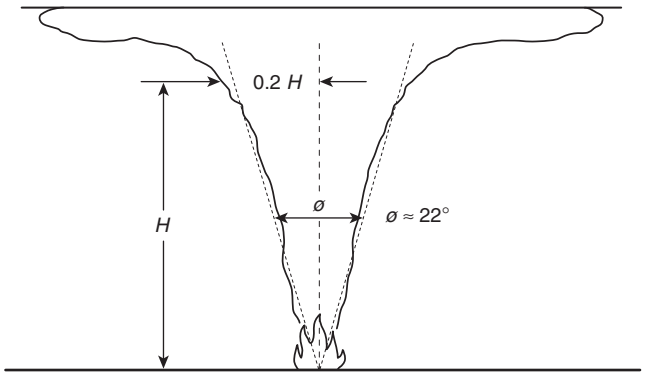

FIGURE B.4.9.1 The Plume Divergence of an Unconstrained Fire.

B.5 Radiant Energy Detection.

B.5.1 General.

B.5.1.1 Electromagnetic Radiation. Electromagnetic radiation is emitted over a broad range of the spectrum during the combustion process. The portion of the spectrum in which radiant energy–sensing detectors operate has been divided into three bands: ultraviolet (UV), visible, or infrared (IR). These wavelengths are defined with the following wavelength ranges: [3]

(1) Ultraviolet 0.1–0.35 microns
(2) Visible 0.35–0.75 microns
(3) Infrared 0.75–220 microns

B.5.1.2 Wavelength. These wavelength ranges correspond to the quantum-mechanical interaction between matter and energy. Photonic interactions with matter can be characterized by wavelength as shown in Table B.5.1.2.

B.5.1.3 Photon Transfer. When a fuel molecule is oxidized in the combustion process, the combustion intermediate molecule must lose energy to become a stable molecular species.

Table B.5.1.2 Wavelength Ranges

Wavelength	Photonic Interaction
$\lambda < 50$ micron	Gross molecular translations
50 μm $< \lambda <$ 1.0 μm	Molecular vibrations and rotations
1.0 μm $< \lambda <$ 0.05 μm	Valence electron bond vibrations
0.3 μm $< \lambda <$ 0.05 μm	Electron stripping and recombinations

This energy is emitted as a photon with a unique wavelength determined by the following equation:

$$e = \frac{hc}{\lambda} \quad \textbf{(B.56)}$$

where:
e = energy (joules)
h = Planck's constant (6.63E-23 joule-sec)
c = speed of light (m/sec)
λ = wavelength (microns)

[1.0 joule = 5.0345E+18(λ), where λ is measured in microns.]

B.5.1.4 Type of Detector. The choice of the type of radiant energy–sensing detector to use is determined by the type of emissions that are expected from the fire radiator.

B.5.1.4.1 Fuels that produce a flame, a stream of combustible or flammable gases involved in the combustion reaction with a gaseous oxidizer, radiate quantum emissions. These fuels include flammable gases, flammable liquids, combustible liquids, and solids that are burning with a flame.

B.5.1.4.2 Fuels that are oxidized in the solid phase or radiators that are emitting due to their internal temperature (sparks and embers) radiate Planckian emissions. These fuels include carbonaceous fuels such as coal, charcoal, wood, and cellulosic fibers that are burning without an established flame, as well as metals that have been heated due to mechanical impacts and friction.

B.5.1.4.3 Almost all combustion events produce Planckian emissions, emissions that are the result of the thermal energy in the fuel mass. Therefore, spark/ember detectors that are designed to detect these emissions are not fuel specific. Flame detectors detect quantum emissions that are the result of changes in molecular structure and energy state in the gas phase. These emissions are uniquely associated with particular molecular structures. This can result in a flame detector that is very fuel specific.

B.5.1.5 Affects of Ambient. The choice of radiant energy–sensing detector is also limited by the affect of ambient conditions. The design must take into account the radiant energy absorption of the atmosphere, presence of non-fire-related radiation sources that might cause nuisance alarms, the electromagnetic energy of the spark, ember, or fire to be detected, the distance from the fire source to the sensor, and characteristics of the sensor.

B.5.1.5.1 Ambient Non-Fire Radiators. Most ambients contain non-fire radiators that can emit at wavelengths used by radiant energy–sensing detectors for fire detection. The designer should make a thorough evaluation of the ambient to identify radiators that have the potential for producing unwarranted alarm response from radiant energy–sensing detectors.

Copyright National Fire Protection Association
Provided by IHS under license with NFPA
No reproduction or networking permitted without license from IHS
Not for Resale

Since radiant energy–sensing detectors use electronic components that can act as antennas, the evaluation should include radio band, microwave, infrared, visible, and ultraviolet sources.

B.5.1.5.2 Ambient Radiant Absorbance. The medium through which radiant energy passes from fire source to detector has a finite transmittance. Transmittance is usually quantified by its reciprocal, absorbance. Absorbance by atmospheric species varies with wavelength. Gaseous species absorb at the same wavelengths that they emit. Particulate species can transmit, reflect, or absorb radiant emission, and the proportion that is absorbed is expressed as the reciprocal of its emissivity, ε.

B.5.1.5.3 Contamination of Optical Surfaces. Radiant energy can be absorbed or reflected by materials contaminating the optical surfaces of radiant energy–sensing detectors. The designer should evaluate the potential for surface contamination and implement provisions for keeping these surfaces clean. Extreme caution must be employed when considering the use of surrogate windows. Common glass, acrylic, and other glazing materials are opaque at the wavelengths used by most flame detectors and some spark/ember detectors. Placing a window between the detector and the hazard area that has not been listed by a nationally recognized testing laboratory (NRTL) for use with the detector in question is a violation of the detector listing and will usually result in a system that is incapable of detecting a fire in the hazard area.

B.5.1.5.4 Design Factors. These factors are important for several reasons. First, a radiation sensor is primarily a line-of-sight device, and must "see" the fire source. If there are other radiation sources in the area, or if atmospheric conditions are such that a large fraction of the radiation could be absorbed in the atmosphere, the type, location, and spacing of the sensors could be affected. In addition, the sensors react to specific wavelengths, and the fuel must emit radiation in the sensor's bandwidth. For example, an infrared detection device with a single sensor tuned to 4.3 microns (the CO_2 emission peak) cannot be expected to detect a non-carbon-based fire. Furthermore, the sensor needs to be able to respond reliably within the required time, especially when activating an explosion suppression system or similar fast-response extinguishing or control system.

B.5.1.6 Detector Response Model. The response of radiant energy–sensing detectors is modeled with a modified inverse square relationship as shown in the following equation [5]:

$$S = \frac{kPe^{-\zeta d}}{d^2} \quad \textbf{(B.57)}$$

where:
S = radiant power reaching the detector (W or Btu/sec) sufficient to produce alarm response
k = proportionality constant for the detector
P = radiant power emitted by the fire (W or Btu/sec)
ζ = extinction coefficient of air at detector operating wavelengths
d = distance between the fire and the detector (m or ft)

This relationship models the fire as a point source radiator, of uniform radiant output per steradian, some distance (d) from the detector. This relationship also models the effect of absorbance by the air between the fire and the detector as being a uniform extinction function. The designer must verify that these modeling assumptions are valid for the application in question.

B.5.2 Design of Flame Detection Systems.

B.5.2.1 Detector Sensitivity. Flame detector sensitivity is traditionally quantified as the distance at which the unit can detect a fire of given size. The fire most commonly used by the NRTLs in North America is a 0.9 m^2 (1.0 ft^2) fire fueled with regular grade, unleaded gasoline. Some special-purpose detectors are evaluated using 15 mm (6.0 in.) diameter fires fueled with isopropanol.

B.5.2.1.1 This means of sensitivity determination does not take into account that flames can best be modeled as an optically dense radiator in which radiant emissions radiated from the far side of the flame toward the detector are re-absorbed by the flame. Consequently, the radiated power from a flame is not proportional to the area of the fire but to the flame silhouette, and hence to the height and width of the fire.

B.5.2.1.2 Because flame detectors detect the radiant emissions produced during the formation of flame intermediates and products, the radiant intensity produced by a flame at a given wavelength is proportional to the relative concentration of the specific intermediate or product in the flame and that portion of the total heat release rate of the fire resulting from the formation of that specific intermediate or product. This means that the response of a detector can vary widely as different fuels are used to produce a fire of the same surface area and flame width.

B.5.2.1.3 Many flame detectors are designed to detect specific products such as water (2.5 microns) and CO_2 (4.35 microns). These detectors cannot be used for fires that do not produce these products as a result of the combustion process.

B.5.2.1.4 Many flame detectors use time variance of the radiant emissions of a flame to distinguish between non-fire radiators and a flame. Where a deflagration hazard exists, the designer must determine the sample time period for such flame detectors and how such detectors will operate in the event of a deflagration of fuel vapor or fuel gases.

B.5.2.2 Design Fire. Using the process outlined in Section B.2, determine the fire size (kW or Btu/sec) at which detection must be achieved.

B.5.2.2.1 Compute the surface area the design fire is expected to occupy from the correlations in Table B.2.3.2.6.2(a) or other sources. Use the flame height correlation to determine the height of the flame plume:

$$h_f = 0.182\left(kQ\right)^{2/5} \quad \text{(for SI units)} \quad \textbf{(B.58a)}$$

or

$$h_f = 0.584\left(kQ\right)^{2/5} \quad \text{(for inch-pound units)} \quad \textbf{(B.58b)}$$

where:
h_f = flame height (m or ft)
Q = heat release rate (kW or Btu/sec)
k = wall effect factor

Where there are no nearby walls, use $k = 1$
Where the fuel package is near a wall, use $k = 2$
Where the fuel package is in a corner, use $k = 4$

Copyright National Fire Protection Association
Provided by IHS under license with NFPA
No reproduction or networking permitted without license from IHS
Not for Resale

Determine the minimum anticipated flame area width (w_f). Where flammable or combustible liquids are the fuel load and are unconfined, model the fuel as a circular pool. Compute the radiating area (A_r) using the following equation:

$$A_r = \frac{1}{2h_f w_f} \quad \textbf{(B.59)}$$

where:
A_r = radiating area (m^2 or ft^2)
h_f = flame height (m or ft)
w_f = flame width (m or ft)

B.5.2.2.2 The radiant power output of the fire to the detector can be approximated as being proportional to the radiating area (A_r) of the flame:

$$P = cA_r \quad \textbf{(B.60)}$$

where:
A_r = radiating area (m^2 or ft^2)
c = power per unit area proportionality constant
P = radiated power (W or Btu/sec)

B.5.2.3 Calculate Detector Sensitivity. Using equation B.58a or B.58b compute the radiating area of the test fire used by the NRTL in the listing process (A_t). The radiant power output of the test fire to the detector in the listing process is proportional to the radiating area (A_t) of the listing test flame.

B.5.2.4 Calculate Detector Response to Design Fire. Because the sensitivity of a flame detector is fixed during the manufacturing process, the following is the relationship that determines the radiant power reaching the detector sufficient to produce an alarm response:

$$S = \frac{kcA_t e^{-\zeta d}}{d^2} \quad \textbf{(B.61)}$$

where:
S = radiant power reaching the detector (W or Btu/sec) sufficient to produce alarm response
k = proportionality constant for the detector
A_t = radiant area of the listing test fire (m^2 or ft^2)
ζ = extinction coefficient of air at detector operating wavelengths
d = distance between the fire and the detector during the listing fire test (m or ft)
c = emitted power per unit flame radiating area correlation

Because the sensitivity of the detector is constant over the range of ambients for which it is listed:

$$S = \frac{kcA_r e^{-\zeta d'}}{d'^2} \quad \textbf{(B.62)}$$

where:
S = radiant power reaching the detector (W or Btu/sec) sufficient to produce alarm response
k = proportionality constant for the detector
c = emitted power per unit flame radiating area correlation
A_r = radiant area of the design fire (m^2 or ft^2)
ζ = extinction coefficient of air at detector operating wavelengths
d' = distance between the design fire and the detector (m or ft)

Therefore, use the following equation to determine the following:

$$\frac{kcA_t e^{-\zeta d}}{d^2} = \frac{kcA_r e^{-\zeta d'}}{d'^2} \quad \textbf{(B.63)}$$

To solve for d' use the following equation:

$$\left(\frac{d^2 A_r e^{-\zeta d'}}{A_t e^{-\zeta d}} \right)^{1/2} = d' \quad \textbf{(B.64)}$$

This relation is solved iteratively for d', the distance at which the detector can detect the design fire.

B.5.2.5 Correction for Angular Displacement.

B.5.2.5.1 Most flame detectors exhibit a loss of sensitivity as the fire is displaced from the optical axis of the detector. This correction to the detector sensitivity is shown as a polar graph in Figure A.5.8.3.2.3.

B.5.2.5.2 When the correction for angular displacement is expressed as a reduction of normalized detection distance, the correction is made to detection distance (d').

B.5.2.5.3 When the correction for angular displacement is expressed as a normalized sensitivity (fire size increment), the correction must be made to A_r, prior to calculating response distance (d').

B.5.2.6 Corrections for Fuel. Most flame detectors exhibit some level of fuel specificity. Some manufacturers provide "fuel factors" that relate detector response performance to a fire of one fuel to the response performance of a benchmark fuel. Other manufacturers provide performance criteria for a list of specific fuels. Unless the manufacturer's published instructions, bearing the listing mark, contain explicit instructions for the application of the detector for fuels other than those used in the listing process, the unit cannot be deemed listed for use in hazard areas containing fuels different than those employed in the listing process.

B.5.2.6.1 When the fuel factor correction is expressed as a detection distance reduction, the correction should be applied after the detection distance has been computed.

B.5.2.6.2 When the fuel factor correction is expressed as a function of normalized fire size, the correction must be made prior to calculating detection distance.

B.5.2.7 Atmospheric Extinction Factors.

B.5.2.7.1 Because the atmosphere is not infinitely transmittent at any wavelength, all flame detectors are affected by atmospheric absorption to some degree. The effect of atmospheric extinction on the performance of flame detectors is determined to some degree by the wavelengths used for sensing and the detector electronic architecture. Values for the atmospheric extinction coefficient (ζ) should be obtained from the detector manufacturer's published instructions.

B.5.2.7.2 The numerical value of ζ can be determined experimentally for any flame detector. The detector must be tested with two different sized test fires to determine the distance at which each of the fires can be detected by the detector in question. The larger the difference between the sizes of the flaming fires, the more precise the determination of ζ. Ideally, one test fire would be approximately 4 times the heat release rate (surface area) of the other. The data are then used in the relation:

$$\zeta = \frac{\ln\left[\left(d_1^2 A_2\right)/\left(d_2^2 A_1\right)\right]}{d_2 - d_1} \quad \textbf{(B.65)}$$

Copyright National Fire Protection Association
Provided by IHS under license with NFPA
No reproduction or networking permitted without license from IHS
Not for Resale

where:
"1" = subscripts referring to the first test fire
"2" = subscripts referring to the second test fire
d = maximum distance between the flame detector and the fire at which the fire is detected
A = the radiating area of the test fire as determined per B.5.2.2.1

This relation allows the designer to determine the value of ζ for detectors that are already installed or for those that were evaluated for listing before the inclusion of the requirement for the publishing of ζ appeared in ANSI/FM-3260.

B.5.3 Design of Spark/Ember Detection Systems.

B.5.3.1 Design Fire. Using the process outlined in Section B.2, determine the fire size (kW or Btu/sec) at which detection must be achieved.

B.5.3.1.1 The quantification of the fire is generally derived from the energy investment per unit time sufficient to propagate combustion of the combustible particulate solids in the fuel stream. Because energy per unit time is power, expressed in watts, the fire size criterion is generally expressed in watts or milliwatts.

B.5.3.1.2 The radiant emissions, integrated over all wavelengths, from a non-ideal Planckian radiator is expressed with the following form of the Stefan–Boltzmann equation:

$$P = \varepsilon A \sigma T^4 \quad \textbf{(B.66)}$$

where:
P = radiant power (W or Btu/sec)
ε = emissivity, a material property expressed as a fraction between 0 and 1.0
A = area of radiator (m^2 or ft^2)
σ = Stefan–Boltzmann constant 5.67E-8 W/m^2K^4
T = temperature (K or R)

B.5.3.1.3 This models the spark or ember as a point source radiator.

B.5.3.2 Fire Environment. Spark/ember detectors are usually used on pneumatic conveyance system ducts to monitor combustible particulate solids as they flow past the detector(s). This environment puts large concentrations of combustible particulate solids between the fire and the detector. A value for ζ must be computed for the monitored environment. The simplifying assumption that absorbance at visible levels is equal to or greater than that at infrared wavelengths yields conservative designs and is used.

B.5.3.3 Calculate Detector Response to Design Fire. Because the sensitivity of a spark/ember detector is fixed during the manufacturing process,

$$S = \frac{kPe^{-\zeta d}}{d^2} \quad \textbf{(B.67)}$$

where:
S = radiant power reaching the detector (W or Btu/sec) sufficient to produce alarm response
k = proportionality constant for the detector
P = radiant power emitted by test spark (W or Btu/sec)
ζ = extinction coefficient of air at detector operating wavelengths
d = distance between the fire and the detector during the listing fire test (m^2 or ft^2)

Because the sensitivity of the detector is constant over the range of ambients for which it is listed,

$$S = \frac{kP'e^{-\zeta d'}}{d'^2} \quad \textbf{(B.68)}$$

where:
S = radiant power reaching the detector (W or Btu/sec) sufficient to produce alarm response
k = proportionality constant for the detector
P' = radiant power from the design fire (W or Btu/sec)
ζ = the extinction coefficient of air at detector operating wavelengths
d' = the distance between the design fire and the detector (m^2 or ft^2)

Therefore, use the following equation to solve for

$$\frac{kPe^{-\zeta d}}{d^2} = \frac{kP'e^{-\zeta d'}}{d'^2} \quad \textbf{(B.69)}$$

To solve for d',

$$d' = \left(\frac{d^2 P' e^{-\zeta d'}}{Pe^{-\zeta d}} \right)^{1/2} \quad \textbf{(B.70)}$$

This relation is solved iteratively for d', the distance at which the detector can detect the design fire.

B.5.3.4 Correction for Angular Displacement.

B.5.3.4.1 Most spark/ember detectors exhibit a loss of sensitivity as the fire is displaced from the optical axis of the detector. This correction to the detector sensitivity is shown as a polar graph in Figure A.5.8.3.2.3.

B.5.3.4.2 When the correction for angular displacement is expressed as a reduction of normalized detection distance, the correction is made to detection distance (d').

B.5.3.4.3 When the correction for angular displacement is expressed as a normalized sensitivity (fire size increment), the correction must be made to P' prior to calculating response distance (d').

B.5.3.5 Corrections for Fuel. Because spark/ember detectors respond to Planckian emission in the near infrared portion of the spectrum, corrections for fuels are rarely necessary.

B.6 Computer Fire Models. Several special application computer models are available to assist in the design and analysis of both heat detectors (e.g., fixed-temperature, rate-of-rise, sprinklers, fusible links) and smoke detectors. These computer models typically run on personal computers and are available from NIST website http:\\fire.nist.gov.

B.6.1 DETACT — T^2. DETACT — T^2 (DETector ACTuation — time squared) calculates the actuation time of heat detectors (fixed-temperature and rate-of-rise) and sprinklers to user-specified fires that grow with the square of time. DETACT — T^2 assumes the detector is located in a large compartment with an unconfined ceiling, where there is no accumulation of hot gases at the ceiling. Thus, heating of the detector is only from the flow of hot gases along the ceiling. Input data include H, τ_0, RTI, T_s, S, and α. The program calculates the heat release rate at detector activation, as well as the time to activation.

Copyright National Fire Protection Association
Provided by IHS under license with NFPA
No reproduction or networking permitted without license from IHS
Not for Resale

B.6.2 DETACT — QS. DETACT — QS (DETector ACTuation — quasi-steady) calculates the actuation time of heat detectors and sprinklers in response to fires that grow according to a user-defined fire. DETACT — QS assumes the detector is located in a large compartment with unconfined ceilings, where there is no accumulation of hot gases at the ceiling. Thus, heating of the detector is only from the flow of hot gases along the ceiling. Input data include H, τ_0, RTI, T_s, the distance of the detector from the fire's axis, and heat release rates at user-specified times. The program calculates the heat release rate at detector activation, the time to activation, and the ceiling jet temperature.

DETACT — QS can also be found in HAZARD I, FIREFORM, FPETOOL. A comprehensive evaluation of DETACT QS can be found in the *SFPE Engineering Guide: Evaluation of the Computer Fire Model DETACT QS*. This guide provides information on the theoretical basis, mathematical robustness, sensitivity of output to input, and an evaluation of the predictive ability of the model.

B.6.3 LAVENT. LAVENT (Link Actuated VENT) calculates the actuation time of sprinklers and fusible link-actuated ceiling vents in compartment fires with draft curtains. Inputs include the ambient temperature, compartment size, thermophysical properties of the ceiling, fire location, size and growth rate, ceiling vent area and location, RTI, and temperature rating of the fusible links. Outputs of the model include the temperatures and release times of the links, the areas of the vents that have opened, the radial temperature distribution at the ceiling, and the temperature and height of the upper layer.

B.6.4 References.

1. Alpert, R. "Ceiling Jets," *Fire Technology*, Aug. 1972.

2. "Evaluating Unsprinklered Fire Hazards," *SFPE Technology Report* 83-2.

3. Babrauskas, V., Lawson, J. R., Walton, W. D., and Twilley, W. H. "Upholstered Furniture Heat Release Rates Measured with a Furniture Calorimeter," (NBSIR 82-2604) (Dec. 1982). National Institute of Standards and Technology (formerly National Bureau of Standards), Center for Fire Research, Gaithersburg, MD 20889.

4. Beyler, C. "A Design Method for Flaming Fire Detection," *Fire Technology*, Vol. 20, No. 4, Nov. 1984.

5. DiNenno, P., ed. Chapter 31, *SFPE Handbook of Fire Protection Engineering*, by R. Schifiliti, Sept. 1988.

6. Evans, D. D. and Stroup, D. W. "Methods to Calculate Response Time of Heat and Smoke Detectors Installed Below Large Unobstructed Ceilings," (NBSIR 85-3167) (Feb. 1985, issued Jul. 1986). National Institute of Standards and Technology (formerly National Bureau of Standards), Center for Fire Research, Gaithersburg, MD 20889.

7. Heskestad, G. "Characterization of Smoke Entry and Response for Products-of-Combustion Detectors" Proceedings, 7th International Conference on Problems of Automatic Fire Detection, Rheinish-Westfalischen Technischen Hochschule Aachen (Mar. 1975).

8. Heskestad, G. "Investigation of a New Sprinkler Sensitivity Approval Test: The Plunge Test," FMRC Tech. Report 22485, Factory Mutual Research Corporation, 1151 Providence Turnpike, Norwood, MA 02062.

9. Heskestad, G. and Delichatsios, M. A. "The Initial Convective Flow in Fire: Seventeenth Symposium on Combustion," The Combustion Institute, Pittsburgh, PA (1979).

10. Heskestad, G. and Delichatsios, M. A. "Environments of Fire Detectors — Phase 1: Effect of Fire Size, Ceiling Height and Material," Measurements Vol. I (NBS-GCR-77-86), Analysis Vol. II (NBS-GCR-77-95). National Technical Information Service (NTIS), Springfield, VA 22151.

11. Heskestad, G. and Delichatsios, M. A. "Update: The Initial Convective Flow in Fire," *Fire Safety Journal*, Vol. 15, No. 5, 1989.

12. International Organization for Standardization, *Audible Emergency Evacuation Signal*, ISO 8201, 1987.

13. Klote, J. and Milke, J. "Design of Smoke Management Systems," American Society of Heating, Refrigerating and Air Conditioning Engineers, Atlanta, GA, 1992.

14. Lawson, J. R., Walton, W. D., and Twilley, W. H. "Fire Performance of Furnishings as Measured in the NBS Furniture Calorimeter, Part 1," (NBSIR 83-2787) (Aug. 1983). National Institute of Standards and Technology (formerly National Bureau of Standards), Center for Fire Research, Gaithersburg, MD 20889.

15. Morton, B. R., Taylor, Sir Geoffrey, and Turner, J. S. "Turbulent Gravitational Convection from Maintained and Instantaneous Sources," Proc. Royal Society A, 234, 1–23, 1956.

16. Schifiliti, R. "Use of Fire Plume Theory in the Design and Analysis of Fire Detector and Sprinkler Response," Master's Thesis, Worcester Polytechnic Institute, Center for Firesafety Studies, Worcester, MA, 1986.

17. Title 47, Code of Federal Regulations, Communications Act of 1934 Amended.

18. Schifiliti, R. and Pucci, W. "Fire Detection Modelling, State of the Art," 6 May, 1996 sponsored by the Fire Detection Institute, Bloomfield, CT.

19. Forney, G., Bukowski, R., Davis, W. "Field Modelling: Effects of Flat Beamed Ceilings on Detector and Sprinkler Response," Technical Report, Year 1. International Fire Detection Research Project, National Fire Protection Research Foundation, Quincy, MA. October, 1993.

20. Davis, W., Forney, G., Bukowski, R. "Field Modelling: Simulating the Effect of Sloped Beamed Ceilings on Detector and Sprinkler Response," Year 1. International Fire Detection Research Project Technical Report, National Fire Protection Research Foundation, Quincy, MA. October, 1994.

21. Brozovski, E. "A Preliminary Approach to Siting Smoke Detectors Based on Design Fire Size and Detector Aerosol Entry Lag Time," Master's Thesis, Worcester Polytechnic, Worcester, MA, 1989.

22. Cote, A. *NFPA Fire Protection Handbook*, 17th Edition, National Fire Protection Association, Quincy, MA, 1992.

23. Tewarson, A., "Generation of Heat and Chemical Compounds in Fires," *SFPE Handbook of Fire Protection Engineering*, Second Edition, NFPA and SFPE, 1995.

24. Hollman, J. P. *Heat Transfer*, McGraw-Hill, New York, 1976.

25. Custer, R. L. P., and Meacham, B. "Introduction to Performance Based Fire Safety," SFPE, 1997.

26. Schifiliti, R. P., Meacham B., Custer, R. L. P. "Design of Detection Systems," *SFPE Handbook of Fire Protection Engineering*.

27. Marrion, C. "Correction Factors for the Heat of Combustion in NFPA 72," Appendix B, Fire Protection Engineering, SFPE, 1998.

28. Marrion, C. "Designing and Analyzing the Response of Detection Systems: An Update to Previous Correlations," 1988.

Copyright National Fire Protection Association
Provided by IHS under license with NFPA
No reproduction or networking permitted without license from IHS
Not for Resale

29. Custer, R. and Bright, R. "Fire Detection: The State-of-the-Art," NBS Tech. Note 839, National Bureau of Standards, Washington, 1974.

30. Meacham, Brian J. "Characterization of Smoke from Burning Materials for the Evaluation of Light Scattering-Type Smoke Detector Response," MS Thesis, WPI Center for Firesafety Studies, Worcester, MA, 1991.

31. Delichatsios, M. A. "Categorization of Cable Flammability, Detection of Smoldering, and Flaming Cable Fires," Interim Report, Factory Mutual Research Corporation, Norwood, MA, NP-1630, Nov. 1980.

32. Heskestad, G. FMRC Serial Number 21017, Factory Mutual Research Corp., Norwood, MA, 1974.

33. Marrion, C. E. "Lag Time Modeling and Effects of Ceiling Jet Velocity on the Placement of Optical Smoke Detectors," MS Thesis, WPI Center for Firesafety Studies, Worcester, MA, 1989.

34. Kokkala, M. et al. "Measurements of the Characteristic Lengths of Smoke Detectors," *Fire Technology*, Vol. 28, No. 2, National Fire Protection Association, Quincy, MA, 1992.

35. UL 268, *Standard for Safety, Smoke Detectors for Fire Protective Signaling Systems*, Underwriters Laboratories, Inc., Northbrook, IL, 1989.

36. Deal, Scott. "Technical Reference Guide for FPEtool Version 3.2," NISTIR 5486, National Institute for Standards and Technology, U.S. Department of Commerce, Gaithersburg, MD, Aug. 1994.

37. Mowrer, F. W. "Lag Times Associated with Detection and Suppression," *Fire Technology*, Vol. 26, No. 3, pp. 244–265, 1990.

38. Newman, J. S. "Principles for Fire Detection," *Fire Technology*, Vol. 24, No. 2, pp. 116–127, 1988.

39. Custer, R., Meacham, B., Wood, C. "Performance Based Design Techniques for Detection and Special Suppression Applications," Proceedings of the SFPE Engineering Seminars on Advances in Detection and Suppression Technology, 1994.

40. SFPE *Engineering Guide to Performance Based Fire Protection Analysis and Design.*

41. SFPE Handbook of Fire Protection Engineering, Third Edition.

42. Drysdale, Dougal, *An Introduction to Fire Dynamics*, John Wiley & Sons, New York, NY, 1985, ISBN 0 471 90613 1, Second Edition.

43. Nam S., Donovan L.P. and Kim S.G.; Establishing Heat Detectors Thermal Sensitivity Through Bench Scale Tests; *Fire Safety Journal*, Volume 39, Number 3, 191–215; April 2004.

44. Nam S.; Thermal Response Coefficient TRC of Heat Detectors and Its Field Applications; Fire Detection and Research Applications Symposium; NFP Research Foundation; January 2003.

45. Nam S.; Performance-Based Heat Detector Spacing; Interflam 2004; pages 883–892 .

46. Geiman, J.A., "Evaluation of Smoke Detector Response Estimation Methods," Master of Science Thesis, University of Maryland, College Park, MD, December 2003.

47. Projected Beam Smoke Detectors — More Than Just a Substitute for Spot Detectors; Fire Protection Engineering; Summer 2004; SFPE

48. Geiman, J.A., and Gottuck, D.T., "Alarm Thresholds for Smoke Detector Modeling," *Fire Safety Science — Proceeding of the Seventh International Symposium*, 2003, pp. 197–208.

B.7 Nomenclature. The nomenclature used in Annex B is defined in Table B.7.

Table B.7 Nomenclature

α	=	fire intensity coefficient (kW/sec^2 or Btu/sec^3)
A	=	area (m^2 or ft^2)
A_0	=	$g/(C_p T_a \rho_0)$ [m^4/sec^{2}kJ) or ft^4/(sec^{2}Btu)]
A_r	=	radiating area (m^2 or ft^2)
A_t	=	radiating area of test fire
C	=	specific heat of detector element (kJ/kg·°C or Btu/lbm·°F)
c	=	speed of light (m/sec or ft/sec)
C_p	=	specific heat of air [kJ/(kg K) or Btu/lbm R (1.040 kJ/kg K)]
D_m	=	mass optical density (m^2/g or ft^2/lb)
d	=	distance between fire and radiant energy–sensing detector
d'	=	distance between fire and detector
$d(Du)/dt$	=	rate of increase of optical density outside the detector
D	=	$0.146 + 0.242r/H$
Δt	=	change in time (seconds)
ΔT	=	increase above ambient in temperature of gas surrounding a detector (°C or °F)
Δt_d	=	increase above ambient in temperature of a detector (°C or °F)
Δt_p^*	=	change in reduced gas temperature
e	=	energy (joules or Btu)
f	=	functional relationship
g	=	gravitational constant (9.81 m/sec^2 or 32 ft/sec^2)
h	=	Planck's constant (6.63E-23 joule-sec)
H	=	ceiling height or height above fire (m or ft)
H_c	=	convective heat transfer coefficient (kW/m^2·°C or Btu/ft^2·sec·°F)
ΔH_c	=	heat of combustion (kJ/mol)
h_f	=	flame height (m or ft)
H_f	=	heat of formation (kJ/mol)
L	=	characteristic length for a given detector design
k	=	detector constant, dimensionless
m	=	mass (kg or lbm)
p	=	positive exponent
P	=	radiant power (watts or Btu/sec)
q	=	heat release rate density per unit floor area (watts/m^2 or Btu/sec·ft^2)
Q	=	heat release rate (kW or Btu/sec)
Q_c	=	convection portion of fire heat release rate (kW or Btu/sec)
Q_{cond}	=	heat transferred by conduction (kW or Btu/sec)
Q_{conv}	=	heat transferred by convection (kW or Btu/sec)
Q_d	=	threshold fire size at which response must occur
Q_{rad}	=	heat transferred by radiation (kW or Btu/sec)
Q_{total}	=	total heat transfer (kW or Btu/sec)
Q_{CR}	=	critical heat release rate (kW or Btu/sec)
Q_{DO}	=	design heat release rate (kW or Btu/sec)
Q_m	=	maximum heat release rate (kW or Btu/sec)
Q_p	=	predicted heat release rate (kW or Btu/sec)

(continues)

Copyright National Fire Protection Association
Provided by IHS under license with NFPA
No reproduction or networking permitted without license from IHS
Not for Resale

Q_T	=	threshold heat release rate at response (kW or Btu/sec)
r	=	radial distance from fire plume axis (m or ft)
ρ_0	=	density of ambient air [kg/m^3 or lb/ft^3 (1.1 kg/m^3)]
RTI	=	response time index (m$^{1/2}$sec$^{1/2}$ or ft$^{1/2}$sec$^{1/2}$)
S	=	spacing of detectors or sprinkler heads (m or ft)
S	=	radiant energy
t_{DO}	=	time at which the design objective heat release rate (Q_{DO}) is reached (seconds)
t_{CR}	=	time at which the critical heat release rate (Q_{CR}) is reached (seconds)
t	=	time (seconds)
t_c	=	critical time — time at which fire would reach a heat release rate of 1055 kW (1000 Btu/sec) (seconds)
t_d	=	time to detector response
t_g	=	fire growth time to reach 1055 kW (1000 Btu/sec) (seconds)
t_r	=	response time (seconds)
t_{respond}	=	time available, or needed, for response to an alarm condition (seconds)
t_v	=	virtual time of origin (seconds)
t_{2f}	=	arrival time of heat front (for $p = 2$ power law fire) at a point r/H (seconds)
t^*_{2f}	=	reduced arrival time of heat front (for $p = 2$ power law fire) at a point r/H (seconds)
t^*_p	=	reduced time
T	=	temperature (°C or °F)
T_a	=	ambient temperature (°C or °F)
T_c	=	plume centerline temperature (°C or °F)
T_d	=	detector temperature (°C or °F)
T_g	=	temperature of fire gases (°C or °F)
T_s	=	rated operating temperature of a detector or sprinkler (°C or °F)
u_0	=	instantaneous velocity of fire gases (m/sec or ft/sec)
u	=	velocity (m/sec or ft/sec)
u_c	=	critical velocity
U^*_p	=	reduced gas velocity
V	=	velocity of smoke at detector
w_f	=	flame width (m or ft)
Y	=	defined in equation B.27
z	=	height above top of fuel package involved (m or ft)
λ	=	wavelength (microns)
Z_m	=	maximum height of smoke rise above fire surface (m or ft)
τ	=	detector time constant mc/H_cA (seconds)
τ_0	=	detector time constant measured at reference velocity u_0 (seconds)
ε	=	emissivity, a material property expressed as a fraction between 0 and 1.0

Annex C Wiring Diagrams and Guide for Testing Fire Alarm Circuits

This annex is not a part of the requirements of this NFPA document but is included for informational purposes only.

Annex C provides guidance for testing of the various circuit styles and classes identified in Table 6.5, Table 6.6.1, and Table 6.7 of Chapter 6. These tables have been substantially revised in this edition of the Code but these revisions have not been reflected in Annex C. The changes made to the Chapter 6 tables are summarized below:

Table 6.5 Performance of Initiating Device Circuits:

(1) Circuit Styles A, C, and E have been completely eliminated.

(2) Performance information for circuit Styles B and D remains but these circuits are now designated simply Class B and Class A, respectively, without any style designation.

Table 6.6.1 Performance of Signaling Line Circuit

(1) Circuit Styles 0.5, 1, 2, 3, 3.5, 4.5, and 5 have been completely eliminated.

(2) Circuit Styles 4, 6, and 7 remain.

Table 6.7 Notification Appliance Circuit.

(1) Circuit Styles W and X have been completely eliminated.

(2) Performance information for circuit Styles Y and Z remains but these circuits are now designated simply Class B and Class A, respectively, without any style designation.

Since Annex C has not changed, it still provides useful guidance for applications that use the older style designations. However for these older styles, users of this annex will need to consult with earlier editions of the Code to obtain related circuit performance information.

C.1 The wiring diagrams depicted in Figure C.2.1 through Figure C.2.17 are representative of typical circuits encountered in the field and are not intended to be all-inclusive.

The noted styles are as indicated in Table 6.5, Table 6.6.1, Table 6.7, and Table 8.6.3.2.2.2.

The noted systems are as indicated in NFPA 170, *Standard for Fire Safety Symbols.*

Because ground-fault detection is not required for all circuits, tests for ground-fault detection should be limited to those circuits equipped with ground-fault detection.

An individual point-identifying (addressable) initiating device operates on a signaling line circuit and not on a Style A, B, C, D, or E (Class B and Class A) initiating device circuit.

All of the following initiating device circuits are illustrative of either alarm or supervisory signaling. Alarm-initiating devices and supervisory initiating devices are not permitted on the same initiating device circuit.

In addition to losing its ability to receive an alarm from an initiating device located beyond an open fault, a Style A (Class B) initiating device circuit also loses its ability to receive an alarm when a single ground fault is present.

Style C and Style E (Class B and Class A) initiating device circuits can discriminate between an alarm condition and a wire-to-wire short. In these circuits, a wire-to-wire short provides a trouble indication. However, a wire-to-wire short prevents alarm operation. Shorting-type initiating devices cannot be used without an additional current or voltage limiting element.

Directly connected system smoke detectors, commonly referred to as two-wire detectors, should be listed as being electrically and functionally compatible with the fire alarm control unit and the specific subunit or module to which they are connected. If the detectors and the units or modules are not compatible, it is possible that, during an alarm condition, the detector's visible indicator will illuminate, but no change of

Copyright National Fire Protection Association
Provided by IHS under license with NFPA
No reproduction or networking permitted without license from IHS
Not for Resale

state to the alarm condition will occur at the fire alarm control unit. Incompatibility can also prevent proper system operation at extremes of operating voltage, temperature, and other environmental conditions.

Where two or more two-wire detectors with integral relays are connected to a single initiating device circuit and their relay contacts are used to control essential building functions (e.g., fan shutdown, elevator recall), it should be clearly noted that the circuit might be capable of supplying only enough energy to support one detector/relay combination in an alarm mode. If control of more than one building function is required, each detector/relay combination used to control separate functions should be connected to separate initiating device circuits, or they should be connected to an initiating device circuit that provides adequate power to allow all the detectors connected to the circuit to be in the alarm mode simultaneously. During acceptance and reacceptance testing, this feature should always be tested and verified.

A speaker is an alarm notification appliance, and, if used as shown in the diagrams in C.2, the principle of operation and supervision is the same as for other audible alarm notification appliances (e.g., bells and horns).

The testing of supervised remote relays is to be conducted in the same manner as for notification appliances.

C.2 Wiring Diagrams. When testing circuits, the correct wiring size, insulation type, and conductor fill should be verified in accordance with the requirements of NFPA 70, *National Electrical Code*.

C.2.1 Nonpowered Alarm-Initiating or Supervisory-Initiating Devices (e.g., Manual Station or Valve Supervisory Switch) Connected to Style A, B, or C Initiating Device Circuits. Disconnect conductor at device or control unit, then reconnect. Temporarily connect a ground to either leg of conductors, then remove ground. Both operations should indicate audible and visual trouble with subsequent restoration at control unit. Conductor-to-conductor short should initiate alarm. Style A and Style B (Class B) indicate trouble Style C (Class B). Style A (Class B) does not initiate alarm while in trouble condition. See Figure C.2.1.

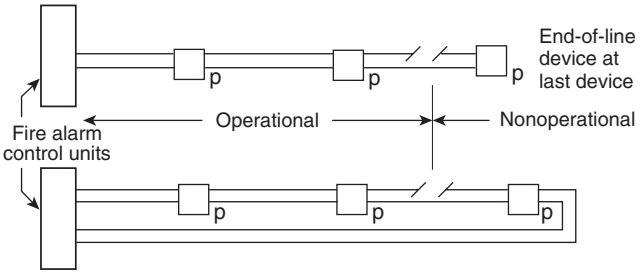

FIGURE C.2.1 Nonpowered Alarm-Initiating or Supervisory-Initiating Devices Connected to Style A, B, or C Initiating Device Circuits.

C.2.2 Nonpowered Alarm-Initiating or Supervisory-Initiating Devices Connected to Style D or E Initiating Device Circuits. Disconnect a conductor at a device at midpoint in the circuit. Operate a device on either side of the device with the disconnected conductor. Reset fire alarm control unit and reconnect conductor. Repeat test with a ground applied to either conductor in place of the disconnected conductor. Both operations should indicate audible and visual trouble, then alarm or supervisory indication with subsequent restoration. See Figure C.2.2.

C.2.3 Circuit-Powered (Two-Wire) Smoke Detectors for Style A, B, or C Initiating Device Circuits. Remove smoke detector where installed with plug-in base or disconnect conductor from fire alarm control unit beyond first device. Activate smoke detector per manufacturer's published instructions between fire alarm control unit and circuit break. Restore detector or circuit, or both. Fire alarm control unit should indicate trouble where fault occurs and alarm where detectors are activated between the break and the fire alarm control unit. See Figure C.2.3.

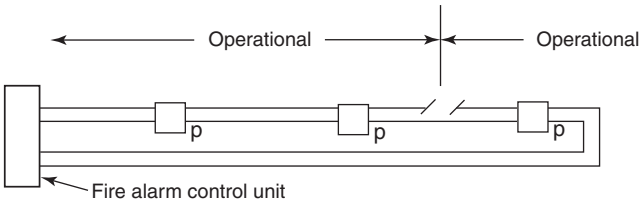

FIGURE C.2.2 Nonpowered Alarm-Initiating or Supervisory-Initiating Devices Connected to Style D or E Initiating Device Circuits.

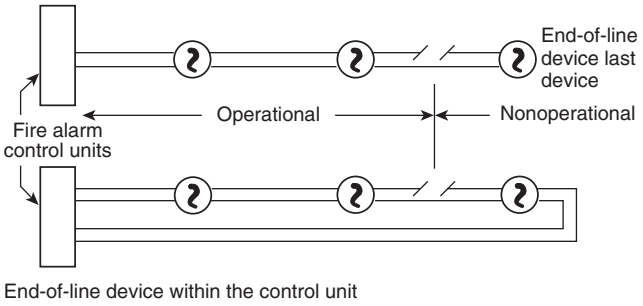

FIGURE C.2.3 Circuit-Powered (Two-Wire) Smoke Detectors for Style A, B, or C Initiating Device Circuits.

C.2.4 Circuit-Powered (Two-Wire) Smoke Detectors for Style D or E Initiating Device Circuits. Disconnect conductor at a smoke detector or remove where installed with a plug-in base at midpoint in the circuit. Operate a device on either side of the device with the fault. Reset control unit and reconnect conductor or detector. Repeat test with a ground applied to either conductor in place of the disconnected conductor or removed device. Both operations should indicate audible and visual trouble, then alarm indication with subsequent restoration. See Figure C.2.4.

C.2.5 Combination Alarm-Initiating Device and Notification Appliance Circuits. Disconnect a conductor either at indicating or initiating device. Activate initiating device between the fault and the fire alarm control unit. Activate additional smoke detectors between the device first activated and the fire alarm control unit. Restore circuit, initiating devices, and fire alarm control unit. Confirm that all notification appliances on the circuit operate from the fire alarm control unit up to the fault

Copyright National Fire Protection Association
Provided by IHS under license with NFPA
No reproduction or networking permitted without license from IHS
Not for Resale

and that all smoke detectors tested and their associated ancillary functions, if any, operate. See Figure C.2.5.

C.2.6 Combination Alarm-Initiating Device and Notification Appliance Circuits Arranged for Operation with a Single Open or Ground Fault. Testing of the circuit is similar to that described in C.2.5. Confirm that all notification appliances operate on either side of fault. See Figure C.2.6.

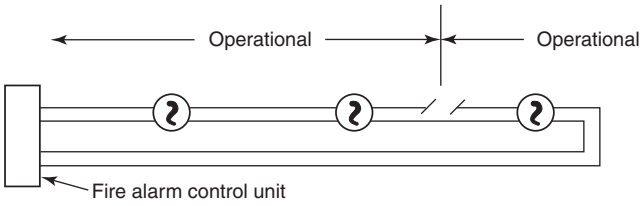

FIGURE C.2.4 Circuit-Powered (Two-Wire) Smoke Detectors for Style D or E Initiating Device Circuits.

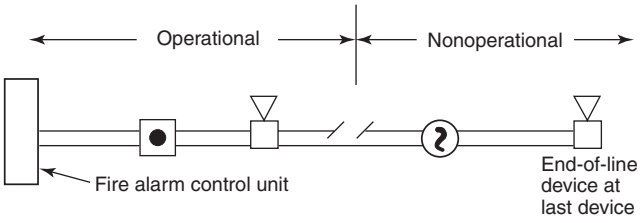

FIGURE C.2.5 Combination Alarm-Initiating Device and Notification Appliance Circuits.

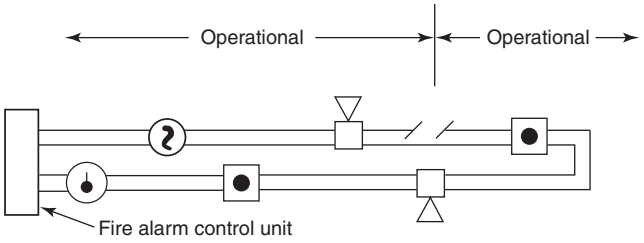

FIGURE C.2.6 Combination Alarm-Initiating Device and Notification Appliance Circuits Arranged for Operation with a Single Open or Ground Fault.

C.2.7 Style A, B, or C Circuits with Four-Wire Smoke Detectors and an End-of-Line Power Supervision Relay. Testing of the circuit is similar to that described in C.2.3 and C.2.4. Disconnect a leg of the power supply circuit beyond the first device on the circuit. Activate initiating device between the fault and the fire alarm control unit. Restore circuits, initiating devices, and fire alarm control unit. Audible and visual trouble should indicate at the fire alarm control unit where either the initiating or power circuit is faulted. All initiating devices between the circuit fault and the fire alarm control unit should activate. In addition, removal of a smoke detector from a plug-in-type base can also break the power supply circuit. Where circuits contain various powered and nonpowered devices on the same initiating circuit, verify that the nonpowered devices beyond the power circuit fault can still initiate an alarm. A return loop should be brought back to the last powered device and the power supervisory relay to incorporate into the end-of-line device. See Figure C.2.7.

C.2.8 Style A, B, or C Initiating Device Circuits with Four-Wire Smoke Detectors That Include Integral Individual Supervision Relays. Testing of the circuit is similar to that described in C.2.3 with the addition of a power circuit. See Figure C.2.8.

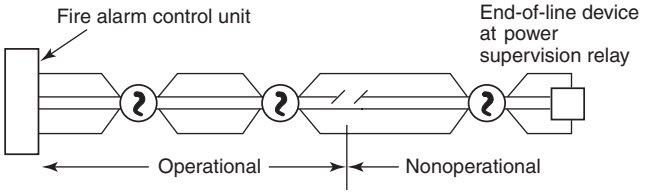

FIGURE C.2.7 Style A, B, or C Circuits with Four-Wire Smoke Detectors and an End-of-Line Power Supervision Relay.

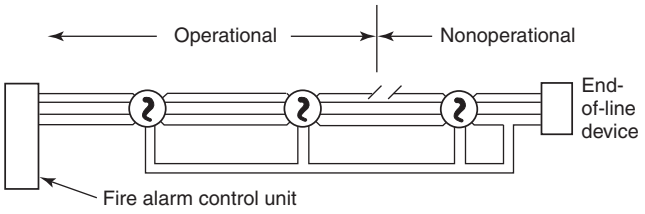

FIGURE C.2.8 Style A, B, or C Initiating Device Circuits with Four-Wire Smoke Detectors That Include Integral Individual Supervision Relays.

C.2.9 Alarm Notification Appliances Connected to Style W and Y (Two-Wire) Circuits. Testing of the notification appliances connected to Style W and Style Y (Class B) is similar to that described in C.2.3. See Figure C.2.9.

C.2.10 Alarm Notification Appliances Connected to Style X and Z (Four-Wire) Circuits. Testing of the notification appliances connected to Style X and Style Z (Class B and Class A) is similar to that described in C.2.4. See Figure C.2.10.

C.2.11 System with a Supervised Audible Notification Appliance Circuit and an Unsupervised Visible Notification Appliance Circuit. Testing of the notification appliances connected to Style X and Style Z (Class B and Class A) is similar to that described in C.2.4. See Figure C.2.11.

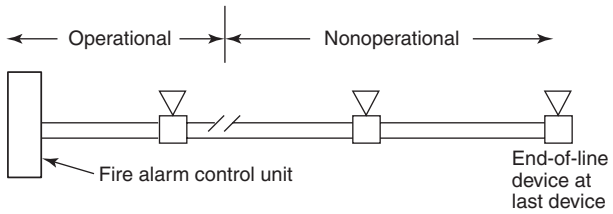

FIGURE C.2.9 Alarm Notification Appliances Connected to Styles W and Y (Two-Wire) Circuits.

Copyright National Fire Protection Association
Provided by IHS under license with NFPA
No reproduction or networking permitted without license from IHS
Not for Resale

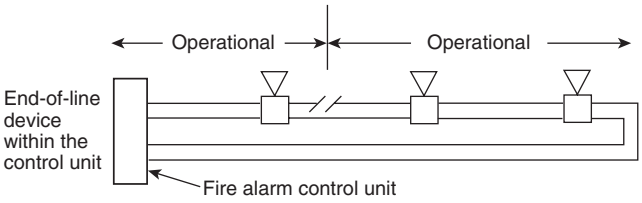

FIGURE C.2.10 Alarm Notification Appliances Connected to Style X and Z (Four-Wire) Circuits.

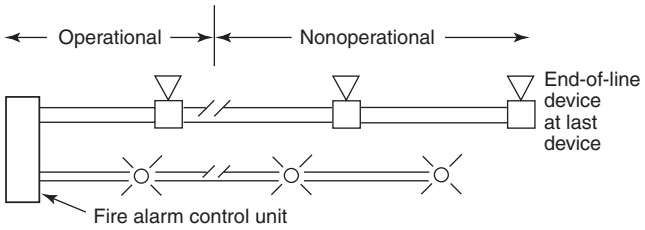

FIGURE C.2.11 Supervised Audible Notification Appliance Circuit and an Unsupervised Visible Notification Appliance Circuit.

C.2.12 System with Supervised Audible and Visible Notification Appliance Circuits. Testing of the notification appliances connected to Style X and Style Z (Class B and Class A) is similar to that described in C.2.4. See Figure C.2.12.

C.2.13 Series Notification Appliance Circuit, Which No Longer Meets the Requirements of *NFPA 72*. An open fault in the circuit wiring should cause a trouble condition. See Figure C.2.13.

C.2.14 Supervised Series Supervisory-Initiating Circuit with Sprinkler Supervisory Valve Switches Connected, Which No Longer Meets the Requirements of *NFPA 72*. An open fault in the circuit wiring of operation of the valve switch (or any supervisory signal device) should cause a trouble condition. See Figure C.2.14.

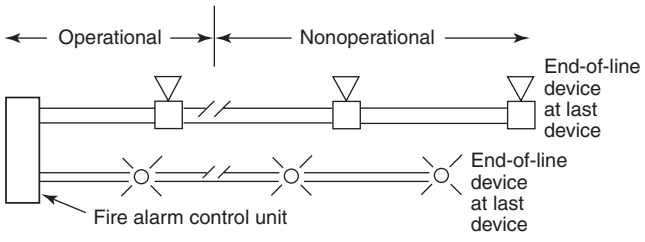

FIGURE C.2.12 Supervised Audible and Visible Notification Appliance Circuits.

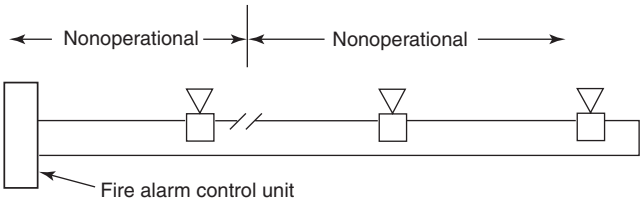

FIGURE C.2.13 Series Notification Appliance Circuit.

C.2.15 Initiating Device Circuit with Parallel Waterflow Alarm Switches and a Series Supervisory Valve Switch, Which No Longer Meets the Requirements of *NFPA 72*. An open fault in the circuit wiring or operation of the valve switch should cause a trouble signal. See Figure C.2.15.

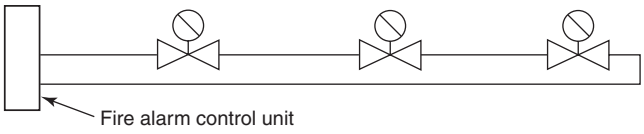

FIGURE C.2.14 Supervised Series Supervisory-Initiating Circuit with Sprinkler Supervisory Valve Switches Connected.

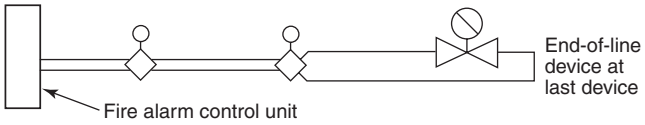

FIGURE C.2.15 Initiating Device Circuit with Parallel Waterflow Alarm Switches and a Series Supervisory Valve Switch.

C.2.16 System Connected to a Municipal Fire Alarm Master Box Circuit. Disconnect a leg of municipal circuit at master box. Verify alarm sent to public communications center. Disconnect leg of auxiliary circuit. Verify trouble condition on control unit. Restore circuits. Activate control unit and send alarm signal to communications center. Verify control unit in trouble condition until master box reset. See Figure C.2.16.

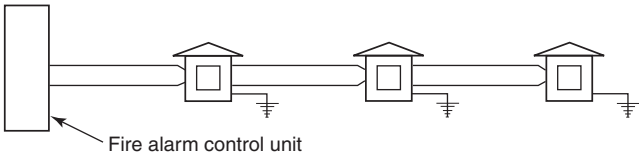

FIGURE C.2.16 System Connected to a Municipal Fire Alarm Master Box Circuit.

C.2.17 Auxiliary Circuit Connected to a Municipal Fire Alarm Master Box. For operation with a master box, an open or ground fault (where ground detection is provided) on the circuit should result in a trouble condition at the fire alarm control unit. A trouble signal at the fire alarm control unit should persist until the master box is reset. For operation with a shunt trip master box, an open fault in the auxiliary circuit should cause an alarm on the municipal system. See Figure C.2.17.

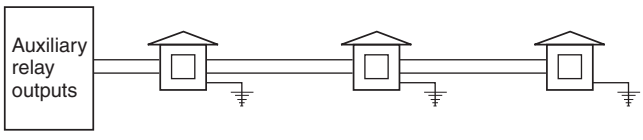

FIGURE C.2.17 Auxiliary Circuit Connected to a Municipal Fire Alarm Master Box.

Copyright National Fire Protection Association
Provided by IHS under license with NFPA
No reproduction or networking permitted without license from IHS
Not for Resale

C.3 Circuit Styles. Some testing laboratories and authorities having jurisdiction permit systems to be classified as a Style 7 (Class A) by the application of two circuits of the same style operating in parallel. An example of this is to take two series circuits, either Style 0.5 or Style 1.0 (Class B), and operate them in parallel. The logic is that if a condition occurs on one of the circuits, the other parallel circuit remains operative.

To understand the principles of the circuit, alarm receipt capability should be performed on a single circuit, and the style type, based on the performance, should be indicated on the record of completion.

C.3.1 Style 0.5. This signaling circuit operates as a series circuit in performance. This is identical to the historical series audible signaling circuits. Any type of break or ground in one of the conductors, or the internal of the multiple interface device, and the total circuit is rendered inoperative.

To test and verify this type of circuit, either a conductor should be lifted or an earth ground should be placed on a conductor or a terminal point where the signaling circuit attaches to the multiplex interface device.

C.3.2 Style 0.5(a) (Class B) Series. Style 0.5(a) functions so that, when a box is operated, the supervisory contacts open, making the succeeding devices nonoperative while the operating box sends a coded signal. Any alarms occurring in any successive devices will not be received at the receiving station during this period. See Figure C.3.2.

C.3.3 Style 0.5(b) (Class B) Shunt. The contact closes when the device is operated and remains closed to shunt out the remainder of the system until the code is complete. See Figure C.3.3.

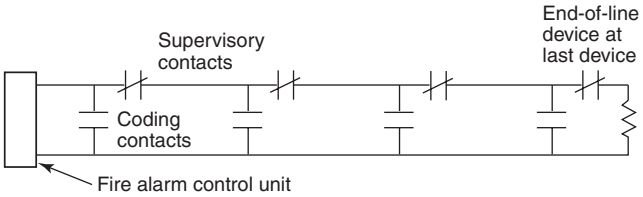

FIGURE C.3.2 Style 0.5(a) (Class B) Series.

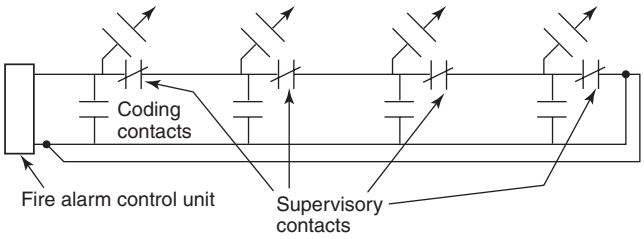

FIGURE C.3.3 Style 0.5(b) (Class B) Shunt.

C.3.4 Style 0.5(c) (Class B) Positive Supervised Successive. An open or ground fault on the circuit should cause a trouble condition at the control unit. See Figure C.3.4.

C.3.5 Style 1.0 (Class B). This is a series circuit identical to the diagram for Style 0.5, except that the fire alarm system hardware has enhanced performance. *[See Figure C.3.5(a) and Figure C.3.5(b).]* A single earth ground can be placed on a conductor or multiplex interface device, and the circuit and hardware will still have alarm operability.

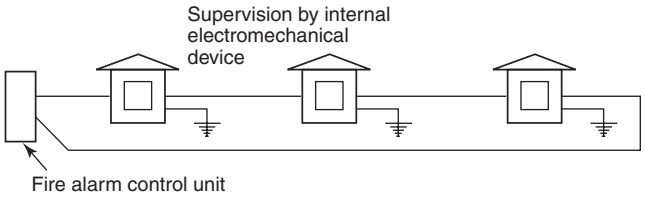

FIGURE C.3.4 Style 0.5(c) (Class B) Positive Supervised Successive.

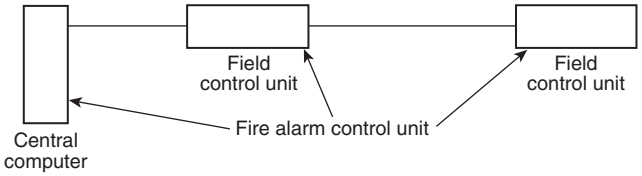

FIGURE C.3.5(a) Style 1.0 (Class B).

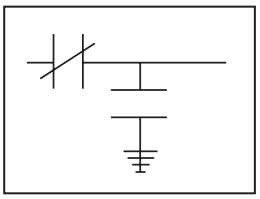

FIGURE C.3.5(b) Typical Transmitter Layout.

If a conductor break or an internal fault occurs in the pathway of the circuit conductors, the entire circuit becomes inoperative.

To verify alarm receipt capability and the resulting trouble signal, place an earth ground on one of the conductors or at the point where the signaling circuit attaches to the multiplex interface device. One of the transmitters or an initiating device should then be placed into alarm.

C.3.6 Typical McCulloh Loop. This is the central station McCulloh redundant-type circuit and has alarm receipt capability on either side of a single break. See Figure C.3.6.

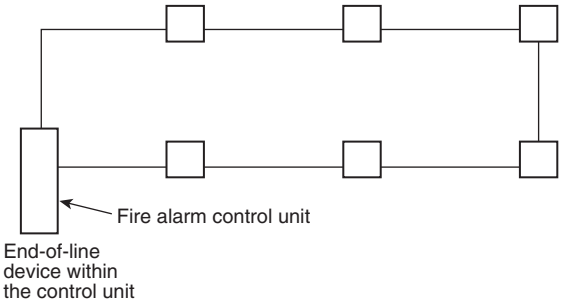

FIGURE C.3.6 Typical McCulloh Loop.

Copyright National Fire Protection Association
Provided by IHS under license with NFPA
No reproduction or networking permitted without license from IHS
Not for Resale

C.3.6.1 To test, lift one of the conductors and operate a transmitter or initiating device on each side of the break. This activity should be repeated for each conductor.

C.3.6.2 Place an earth ground on a conductor and operate a single transmitter or initiating device to verify alarm receipt capability and trouble condition for each conductor.

C.3.6.3 Repeat the instructions of C.3.6.1 and C.3.6.2 at the same time, verify alarm receipt capability, and verify that a trouble condition results.

C.3.7 Style 3.0 (Class B). This is a parallel circuit in which multiplex interface devices transmit signal and operating power over the same conductors. *(See Figure C.3.7.)* The multiplex interface devices might be operable up to the point of a single break. Verify by lifting a conductor and causing an alarm condition on one of the units between the central alarm unit and the break. Either lift a conductor to verify the trouble condition or place an earth ground on the conductors. Test for all the valuations shown on the signaling table.

On ground-fault testing, verify alarm receipt capability by actuating a multiplex interface initiating device or a transmitter.

C.3.8 Style 3.5 (Class B). Repeat the instructions for Style 3.0 (Class B) and verify the trouble conditions by either lifting a conductor or placing a ground on the conductor. See Figure C.3.8.

C.3.9 Style 4.0 (Class B). Repeat the instructions for Style 3.0 (Class B) and include a loss of carrier where the signal is being used. See Figure C.3.9.

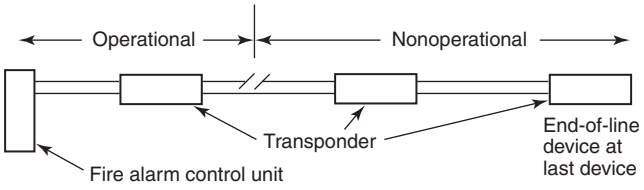

FIGURE C.3.7 Style 3.0 (Class B).

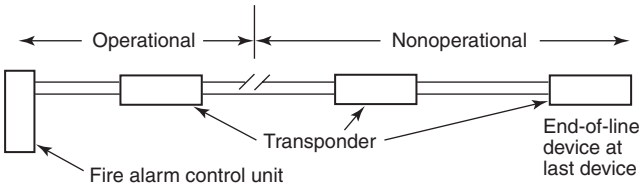

FIGURE C.3.8 Style 3.5 (Class B).

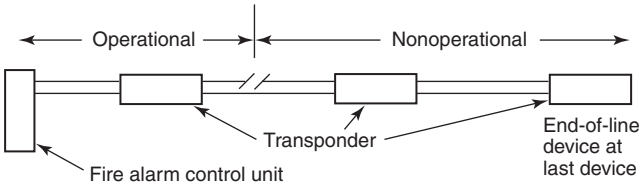

FIGURE C.3.9 Style 4.0 (Class B).

C.3.10 Style 4.5 (Class B). Repeat the instructions for Style 3.5 (Class B). Verify alarm receipt capability while lifting a conductor by actuating a multiple interface device or transmitter on each side of the break. See Figure C.3.10.

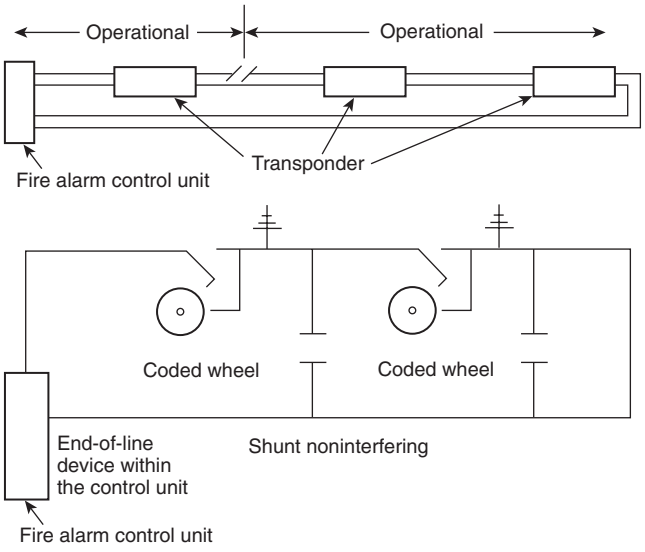

FIGURE C.3.10 Style 4.5 (Class B).

C.3.11 Style 5.0 (Class A). Verify the alarm receipt capability and trouble annunciation by lifting a conductor and actuating a multiplex interfacing device or a transmitter on each side of the break. For the earth ground verification, place an earth ground and certify alarm receipt capability and trouble annunciation by actuating a single multiplex interfacing device or a transmitter. See Figure C.3.11.

C.3.12 Style 6.0 (Class A). Repeat the instructions for Style 2.0 [Class A (a) through (c)]. Verify the remaining steps for trouble annunciation for the various combinations. See Figure C.3.12.

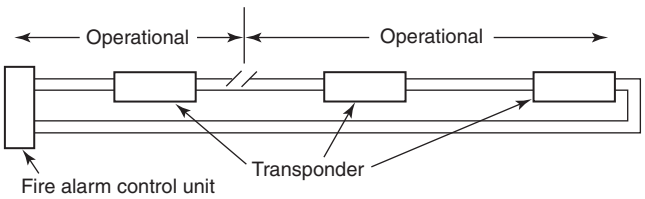

FIGURE C.3.11 Style 5.0 (Class A).

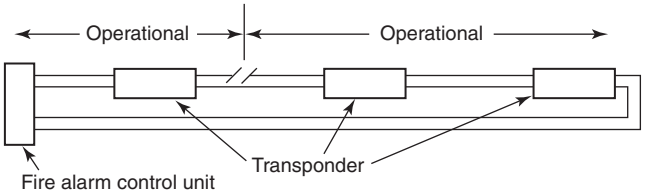

FIGURE C.3.12 Style 6.0 (Class A).

--`,,```,,,,````-`-`,,`,,`,`,,`---

Copyright National Fire Protection Association
Provided by IHS under license with NFPA
No reproduction or networking permitted without license from IHS
Not for Resale

C.3.13 Style 6.0 (with Circuit Isolators) (Class A). For the portions of the circuits electrically located between the monitoring points of circuit isolators, follow the instructions for a Style 7.0 (Class A) circuit. It should be clearly noted that the alarm receipt capability for remaining portions of the circuit protection isolators is not the capability of the circuit but is permitted with enhanced system capabilities. See Figure C.3.13.

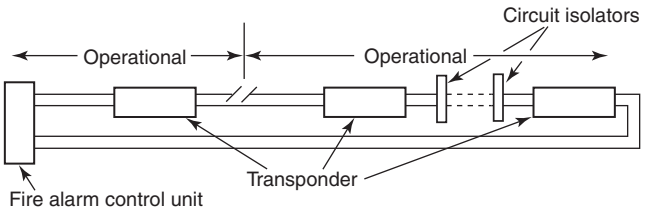

FIGURE C.3.13 Style 6.0 (with Circuit Isolators) (Class A).

C.3.14 Style 7.0 (Class A). Repeat the instructions for testing of Style 6.0 (Class A) for alarm receipt capability and trouble annunciation. See Figure C.3.14(a) through Figure C.3.14(k).

NOTE: A portion of the circuit between the alarm processor or central supervising station and the first circuit isolator does not have alarm receipt capability in the presence of a wire-to-wire short. The same is true for the portion of the circuit from the last isolator to the alarm processor or the central supervising station.

NOTE: Some manufacturers of this type of equipment have isolators as part of the base assembly. Therefore, in the field, this component might not be readily observable without the assistance of the manufacturer's representative.

C.4 Batteries. To maximize battery life, nickel-cadmium batteries should be charged as in Table C.4(a).

To maximize battery life, the battery voltage for lead-acid cells should be maintained within the limits shown in Table C.4(b).

The following procedure is recommended for checking the state of charge for nickel-cadmium batteries:

(1) The battery charger should be switched from float to high-rate mode.
(2) The current, as indicated on the charger ammeter, will immediately rise to the maximum output of the charger, and the battery voltage, as shown on the charger voltmeter, will start to rise at the same time.
(3) The actual value of the voltage rise is unimportant, because it depends on many variables. The length of time it takes for the voltage to rise is the important factor.
(4) If, for example, the voltage rises rapidly in a few minutes, then holds steady at the new value, the battery is fully charged. At the same time, the current will drop to slightly above its original value.
(5) In contrast, if the voltage rises slowly and the output current remains high, the high-rate charge should be continued until the voltage remains constant. Such a condition is an indication that the battery is not fully charged, and the float voltage should be increased slightly.

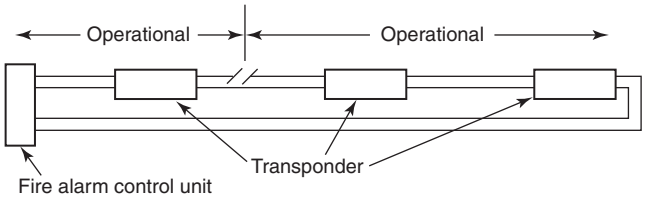

FIGURE C.3.14(a) Style 7.0 (Class A).

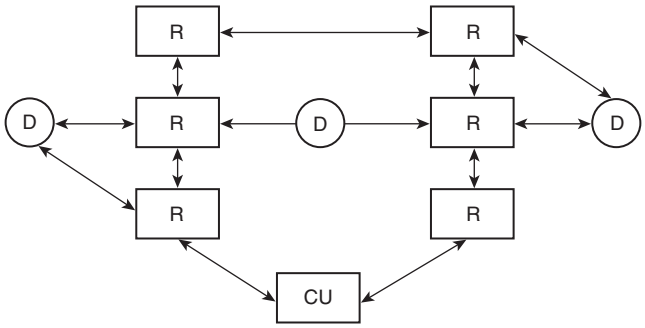

FIGURE C.3.14(b) Low-Power Radio (Wireless) Fire Alarm System.

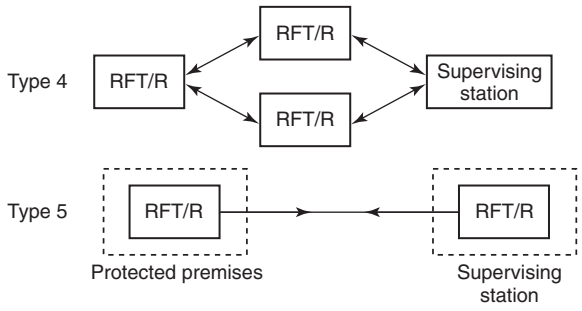

FIGURE C.3.14(c) Two-Way RF Multiplex Systems.

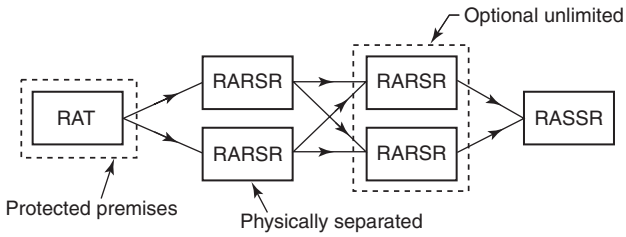

FIGURE C.3.14(d) One-Way Radio Alarm System.

Copyright National Fire Protection Association
Provided by IHS under license with NFPA
No reproduction or networking permitted without license from IHS
Not for Resale

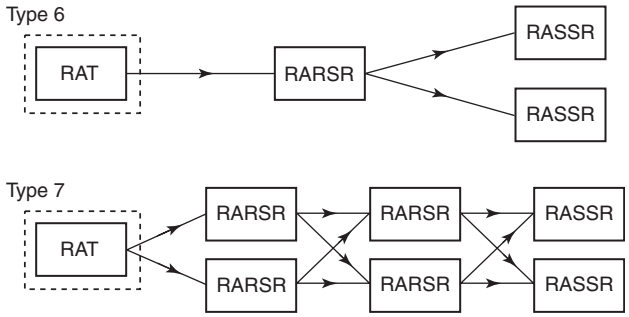

RAT = Radio alarm transmitter
RARSR = Radio alarm repeater station receiver
RASSR = Radio alarm supervising station receiver

FIGURE C.3.14(e) One-Way Radio Alarm System (Type 6 and Type 7).

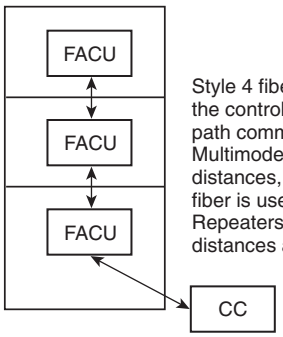

Style 4 fiber network where the control unit has a two-way path communications capability. Multimode fiber is used for short distances, and single mode fiber is used for long distances. Repeaters are used to increase distances as needed.

CC = Control center
FACU = Fire alarm control unit

FIGURE C.3.14(f) Style 4 Fiber Network.

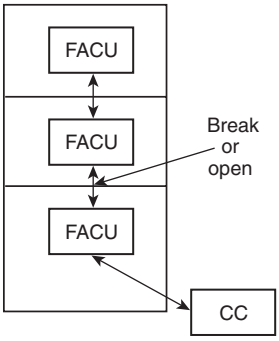

Style 4 fiber network where the control unit has a two-way path communications capability. A single break separates the system into two LANs, both with Style 4 capabilities.

CC = Control center
FACU = Fire alarm control unit

FIGURE C.3.14(g) Style 4 Fiber Network (Single Break).

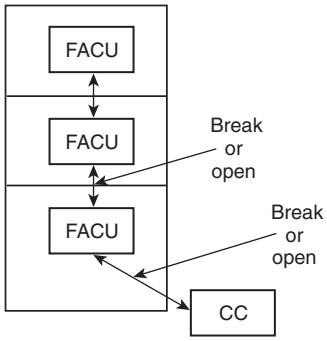

Style 4 fiber network where the control unit has a two-way path communications capability. A double break isolates the control units and the control center in this case. There is one LAN and one isolated control unit operating on its own. Control center is isolated completely with no communications with the network.

CC = Control center
FACU = Fire alarm control unit

FIGURE C.3.14(h) Style 4 Fiber Network (Double Break).

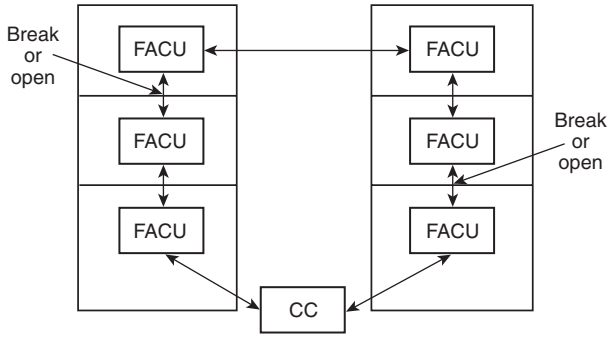

Style 7 fiber network where the control unit has a two-way path communications capability with the two breaks now breaking into two LANs, both functioning as independent networks with the same Style 7 capabilities.

CC = Control center
FACU = Fire alarm control unit

FIGURE C.3.14(i) Style 7 Fiber Network (Two LANs).

Copyright National Fire Protection Association
Provided by IHS under license with NFPA
No reproduction or networking permitted without license from IHS
Not for Resale

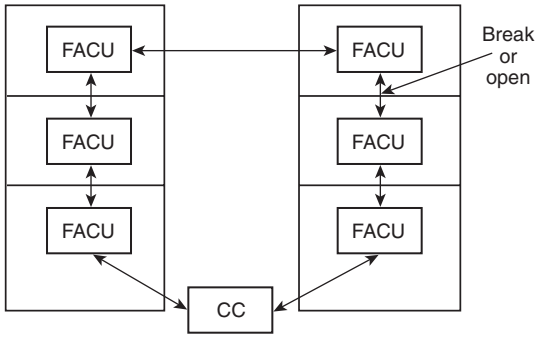

Style 7 fiber network where the control unit has a two-way path communications capability, with one break. System remains as one LAN and meets Style 7.

CC = Control center
FACU = Fire alarm control unit

FIGURE C.3.14(j) Style 7 Fiber Network (One LAN).

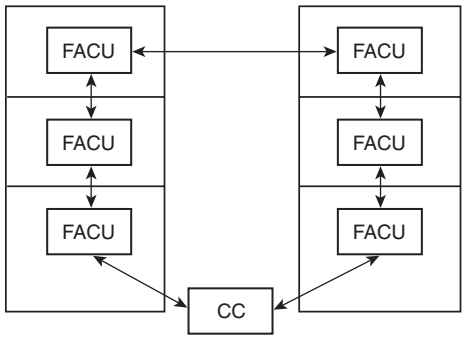

Style 7 fiber network where the control unit has a two-way path communications capability.

CC = Control center
FACU = Fire alarm control unit

FIGURE C.3.14(k) Style 7 Fiber Network.

Table C.4(a) Voltage for Nickel-Cadmium Batteries

Float voltage	1.42 volts/cell + 0.01 volt
High-rate voltage	1.58 volts/cell + 0.07 volt – 0.00 volt

Note: High- and low-gravity voltages are (+) 0.07 volt and (–) 0.03 volt, respectively.

Table C.4(b) Voltage for Lead-Acid Batteries

Float Voltage	High-Gravity Battery (Lead Calcium)	Low-Gravity Battery (Lead Antimony)
Maximum	2.25 volts/cell	2.17 volts/cell
Minimum	2.20 volts/cell	2.13 volts/cell
High-rate voltage	—	2.33 volts/cell

Annex D Sample Ordinance Adopting *NFPA 72*

This annex is not a part of the requirements of this NFPA document but is included for informational purposes only.

D.1 The following sample ordinance is provided to assist a jurisdiction in the adoption of this Code and is not part of this Code.

ORDINANCE NO. _____

An ordinance of the *[jurisdiction]* adopting the 2007 edition of *NFPA 72®, National Fire Alarm Code®*, and documents listed in Chapter 2 of that Code; prescribing regulations governing conditions hazardous to life and property from fire or explosion; providing for the issuance of permits and collection of fees; repealing Ordinance No. _____ of the *[jurisdiction]* and all other ordinances and parts of ordinances in conflict therewith; providing a penalty; providing a severability clause; and providing for publication; and providing an effective date.

BE IT ORDAINED BY THE *[governing body]* OF THE *[jurisdiction]*:

SECTION 1 That the *NFPA 72, National Fire Alarm Code*, and documents adopted by Chapter 2, three (3) copies of which are on file and are open to inspection by the public in the office of the *[jurisdiction's keeper of records]* of the *[jurisdiction]*, are hereby adopted and incorporated into this ordinance as fully as if set out at length herein, and from the date on which this ordinance shall take effect, the provisions thereof shall be controlling within the limits of the *[jurisdiction]*. The same are hereby adopted as the Code of the *[jurisdiction]* for the purpose of prescribing regulations governing conditions hazardous to life and property from fire or explosion and providing for issuance of permits and collection of fees.

SECTION 2 Any person who shall violate any provision of this code or standard hereby adopted or fail to comply therewith; or who shall violate or fail to comply with any order made thereunder; or who shall build in violation of any detailed statement of specifications or plans submitted and approved thereunder; or fail to operate in accordance with any certificate or permit issued thereunder; and from which no appeal has been taken; or who shall fail to comply with such an order as affirmed or modified by a court of competent jurisdiction, within the time fixed herein, shall severally for each and every such violation and noncompliance, respectively, be guilty of a misdemeanor, punishable by a fine of not less than $ _____ nor more than $_____ or by imprisonment for not less than _____ days nor more than _____ days or by both such fine and imprisonment. The imposition of one penalty for any violation shall not excuse the violation or permit it to continue; and all such persons shall be required to correct or remedy such violations or defects within a reasonable time; and when not otherwise specified the application of the above penalty shall not be held to prevent the enforced removal of prohibited conditions. Each day that prohibited conditions are maintained shall constitute a separate offense.

SECTION 3 Additions, insertions, and changes — that the 2007 edition of *NFPA 72, National Fire Alarm Code* is amended and changed in the following respects:

List Amendments

SECTION 4 That ordinance No. _____ of *[jurisdiction]* entitled *[fill in the title of the ordinance or ordinances in effect at the present time]* and all other ordinances or parts of ordinances in conflict herewith are hereby repealed.

Copyright National Fire Protection Association
Provided by IHS under license with NFPA
No reproduction or networking permitted without license from IHS
Not for Resale

SECTION 5 That if any section, subsection, sentence, clause, or phrase of this ordinance is, for any reason, held to be invalid or unconstitutional, such decision shall not affect the validity or constitutionality of the remaining portions of this ordinance. The *[governing body]* hereby declares that it would have passed this ordinance, and each section, subsection, clause, or phrase hereof, irrespective of the fact that any one or more sections, subsections, sentences, clauses, and phrases be declared unconstitutional.

SECTION 6 That the *[jurisdiction's keeper of records]* is hereby ordered and directed to cause this ordinance to be published.

[NOTE: An additional provision may be required to direct the number of times the ordinance is to be published and to specify that it is to be in a newspaper in general circulation. Posting may also be required.]

SECTION 7 That this ordinance and the rules, regulations, provisions, requirements, orders, and matters established and adopted hereby shall take effect and be in full force and effect *[time period]* from and after the date of its final passage and adoption.

Annex E Mass Notification Systems

This annex is not a part of the requirements of this NFPA document but is included for informational purposes only.

NFPA 72 contains requirements that can impact the application of mass notification systems. Coordination of the functions of a mass notification system with those of a fire alarm system is essential in order to provide effective communication in an emergency situation. Conflicting or competing signals or messages from different systems could be very confusing to occupants and have a negative impact on the intended occupant response. Where independent systems are used, the mass notification system would need to interface with the fire alarm system to effect related control actions such as temporary silencing of notification appliances. The use of a single integrated combination system might offer both economic and technical advantages. In any case, coordination between system functions is essential.

This annex was originally proposed as Annex G.

E.1 Introduction. [SIG-FUN]

E.1.1 Scope. Annex E covers the application, installation, location, performance, and maintenance of mass notification systems (MNSs). [SIG-FUN]

NOTE: For the purposes of this annex, a mass notification system is considered to be a system used to provide information and instructions to people in a building, area, site, or other space using intelligible voice communications and possibly including visible signals, text, graphics, tactile, or other communications methods. [SIG-FUN]

E.1.2 Purpose. The systems covered under Annex E are for the protection of life by indicating the existence of an emergency situation and instructing the occupants of the necessary and appropriate response and action. [SIG-FUN]

E.1.3 General. An MNS is designed to alert and protect people. The desirable system provides protected personnel with concise, accurate, timely, and well-directed messages that communicate how they should behave during a variety of emergency situations. Such emergencies include in-progress or impending terrorist attacks, other man-made dangerous situations, accidents, and natural disasters. If messages are to be delivered from a control station, secure communication that would withstand hostile eavesdropping and interference should be used. [SIG-FUN]

E.1.4 Application. The basic functions of a complete MNS should comply with the requirements of this annex. [SIG-FUN]

E.1.4.1 The performance, selection, installation, operation, and use of an MNS should comply with the recommendations of this annex. An MNS might also be referred to as a personnel alerting system (PAS). [SIG-FUN]

NOTE: For the purposes of this annex, a personnel alerting system is considered to be a mass notification system. [SIG-FUN]

E.1.4.2 Annex E does not attempt to cover all equipment, methods, and recommendations that might be necessary or advantageous for the purpose of providing information and instructions to people in emergency and non-emergency situations. [SIG-FUN]

E.1.4.3 The recommendations of this annex should apply to installations within buildings or outdoors. An MNS might target the general building, area, space, campus, or region. [SIG-FUN]

E.1.4.4 The recommendations of this annex should apply to communication methods for the receiving of messages from emergency services personnel when located external to the general building, area, space, campus, or region. [SIG-FUN]

E.1.4.5 An MNS should be installed in all occupancies where required by applicable laws, codes, or standards. [SIG-FUN]

E.2 Fundamentals of Mass Notification Systems. [SIG-FUN]

E.2.1 Equipment and Personnel. [SIG-FUN]

E.2.1.1 Equipment. Equipment constructed and installed in conformity with this annex should be listed for the purpose for which it is used. MNS system components should be installed in accordance with the manufacturer's installation instructions. [SIG-FUN]

E.2.1.2 System Designer. [SIG-FUN]

E.2.1.2.1 MNS plans and specifications should be developed in accordance with this annex by persons who are experienced in the proper design, application, installation, and testing of MNSs. [SIG-FUN]

E.2.1.2.2 The system designer should be identified on the system design documents. Evidence of qualifications should be provided when requested by the authority having jurisdiction. [SIG-FUN]

E.2.1.3 System Installer. Installation personnel shall be supervised by persons who are qualified and experienced in the installation, inspection, and testing of MNSs. Examples of qualified personnel should include, but not be limited to, the following:

(1) Factory trained and certified personnel
(2) Personnel licensed or certified by a state or local authority [SIG-FUN]

E.2.1.4 System Operator. Individuals expected to operate and or initiate an MNS should be properly trained in the purpose, functions, procedures, and anticipated actions of such systems. [SIG-FUN]

E.2.2 Performance-Based Design. [SIG-FUN]

NOTE: Ensuring accurate information dissemination to the right people, at the right place, at the right time, is essential to the mitigation of threat actions and consequences.

--`,,```,,,,````-`-`,,`,,`,`,,`---

Copyright National Fire Protection Association
Provided by IHS under license with NFPA
No reproduction or networking permitted without license from IHS
Not for Resale

Trained personnel are charged with making such decisions in real-time. Quite often, the instructions provided to personnel in affected areas pertain to acting in specific defensive ways so as not to expose them to danger. A typical example is the case of a chemical or biological agent attack wherein the right response is to relocate to secure areas within the building while sealing doors and windows and shutting down air intakes, rather than to leave the building and be exposed to the attacking agent. [SIG-FUN]

In cases of bomb threats, where specific information is available, directions for evacuation are to be given; these directions require more specificity than simply "Evacuate the building." In most cases, the evacuation route might depend on threat intelligence and is likely to be different from that specified in a fire evacuation plan. Most people can tell where the fire comes from but not always know where the bomb is. Automatic evacuation of a building, a common procedure in cases of a fire, is to be avoided since it might expose personnel to even greater danger. [SIG-FUN]

One of the main reasons for implementing an MNS is the threat of terrorism. Terrorism attacks tend to be well organized and are often planned with details to inflict the widest degree of damage that is possible. The MNS must be designed to withstand various attack scenarios and survive even if some damage has already occurred. [SIG-FUN]

E.2.2.1 The information and instructions delivered by an MNS might be initiated manually by an operator or automatically by sensors or other systems and might be delivered to the target audience using prerecorded messages or live messages, or both, tailored to the situation and the audience. [SIG-FUN]

E.2.2.2 Each design of an MNS should be specific to the nature and anticipated risks of each facility for which it is designed. Although this annex outlines some specific criteria and/or limitations, each design should be based on recognized performance-based design practices. [SIG-FUN]

E.2.2.3 Although some minimum criteria are outlined in this annex for a particular feature, the feature might not be applicable for every project. Performance-based design criteria should be established if a particular feature is applicable to the project. [SIG-FUN]

NOTE: Each MNS might be slightly different, depending on the anticipated threat and thus level of protection intended. As an example, a particular project might not require scrambled radio transmissions. As such, criteria for such would not apply. However, if the authority having jurisdiction or design professional has specified scrambled radio transmissions, the minimum applicable criteria within this document would be required. Deviation from these minimum criteria would require approval of the authority having jurisdiction and the design professional. [SIG-FUN]

E.2.2.4 The MNS should be evaluated and take into account various considerations such as those indicated in this annex. The particular design might or might not incorporate these provisions. [SIG-FUN]

NOTE: Security personnel should be able to effect message initiation over the MNS from either a central control station (CCS) or alternate (backup) control station(s). The MNS might require activation of messages originated by mobile sentries and roving patrols using wireless activation devices. In cases where clusters of facilities within the same geographical region exist, one or more regional control stations might also exercise control. Switching control modes between primary and backup control stations should be accomplished simply, quickly, and seamlessly. [SIG-FUN]

The MNS should also provide for live voice and prerecorded localized messaging within a protected individual building. [SIG-FUN]

The MNS should offer a dynamic library of scripted responses to various emergency events. Such a library should be easily customizable to meet the needs of an individual customer. Additionally, the MNS should be able to provide ad hoc live messaging capabilities. Prerecorded messages should be quickly changeable and new ones created swiftly on-site in order to prepare for new threats as they are recognized. [SIG-FUN]

E.2.2.5 The designer should consider both fire and non-fire emergencies when determining risk tolerances for survivability for mass notification [SIG-PRO]

E.2.3 System Fundamentals. [SIG-FUN]

E.2.3.1 Power Supplies. [SIG-FUN

E.2.3.1.1 MNSs should be provided with power supplies meeting 4.4.1 except as excluded in this section. [SIG-FUN]

E.2.3.1.2 System components within buildings should meet the power supply requirements specific to protected premises fire alarm systems in 4.4.1. [SIG-FUN]

E.2.3.1.3 If the MNS is a stand-alone system, or is integrated with fire alarm but on a separate branch circuit, the circuit disconnecting means should be clearly marked, should be accessible only to authorized personnel, and should be identified as "MASS NOTIFICATION CIRCUIT." [SIG-FUN]

E.2.3.1.4 If the MNS is a part of or is directly integrated with the fire alarm system and served by the same branch circuit, the disconnecting means should be clearly marked, should be accessible only to authorized personnel, and should be identified as "FIRE ALARM AND MASS NOTIFICATION CIRCUIT." [SIG-FUN]

E.2.3.1.5 Remote locations that are intended for the origination and transmission of messages external to the building should meet the power supply requirements specific to supervising station facilities in 4.4.1. [SIG-FUN]

E.2.3.1.6 A dedicated primary source of power might not be required for components other than the main control unit when allowed by the authority having jurisdiction. Such applications might include remote wireless devices. [SIG-FUN]

E.2.3.1.7 If a component other than the main control unit is not on a dedicated branch circuit, it should have a primary source of power, a secondary source of power, and should be monitored for power integrity in accordance with 4.4.1. [SIG-FUN]

E.2.3.1.8 A secondary source of power should be provided in accordance with 4.4.1.5.3. [SIG-FUN]

E.2.3.1.9 It might be feasible to shed power loads such as, but not limited to, LED text display boards upon loss of primary power. This provision should be satisfied through a detailed risk assessment and subject to approval of the authority having jurisdiction. [SIG-FUN]

E.2.3.2 Compatibility. All MNS detection devices that receive their power from the initiating device circuit or signaling line circuit of an MNS control unit should be listed for use with the control unit. [SIG-FUN]

Copyright National Fire Protection Association
Provided by IHS under license with NFPA
No reproduction or networking permitted without license from IHS
Not for Resale

E.2.3.3 Distinctive Signals. Distinctive signals at the control unit for MNSs, alarms, supervisory signals, and trouble signals should be distinctively and descriptively annunciated. [SIG-FUN]

E.2.3.4 Function Status Indicators. All controls provided specifically for the purpose of manually overriding any automatic function should provide visible indication of the status of the associated control circuits. [SIG-FUN]

E.2.3.5 Trouble Signals. Trouble signals for an MNS should be in accordance with 4.4.3.5 unless otherwise provided for in this annex. [SIG-FUN]

E.2.3.5.1 Visible and audible trouble signals and visible indication of their restoration to normal should be, as a minimum, indicated at the main control unit. [SIG-FUN]

E.2.3.5.2 Trouble signals and their restoration to normal should be visibly and audibly indicated at a location approved by the authority having jurisdiction for systems installed in compliance with this annex. [SIG-FUN]

E.2.3.5.3 The audible trouble signal silencing means permitted in 4.4.3.5.8 should not be used. [SIG-FUN]

E.2.3.5.4 The audible trouble signal should automatically resound after silencing every 24 hours or less until fault conditions are restored to normal. [SIG-FUN]

E.2.3.6 Deactivation of Signals. A means should be arranged to provide protection of system controls against unauthorized use. These controls should include silence functions of trouble, supervisory, and alarm signals. [SIG-FUN]

E.2.3.7 Distinctive Signals. Audible MNS notification appliances should produce signals (pre-alert) that are distinctive from other similar appliances used for other purposes in the same area. [SIG-FUN]

E.2.3.8 Temperature and Humidity Variation. Conditions might exceed currently listed product limitations. Careful consideration should be used in specifying products for the exposure conditions. [SIG-FUN]

E.2.3.9 Installation and Design. Conditions might exceed currently listed product limitations when a detailed design analysis is prepared and approved by the authority having jurisdiction. Careful consideration should be used in specifying products for the intended conditions. [SIG-FUN]

E.2.3.10 Transient Protection. To reduce the possibility of damage by induced transients, circuits and equipment must be properly protected in accordance with the requirements of NFPA 70, *National Electrical Code*, Article 800. [SIG-FUN]

E.2.3.11 Wiring. The installation of all wiring, cable, and equipment must be in accordance with NFPA 70, *National Electrical Code*, and specifically with Articles 640, 725, and 800, where applicable. Optical fiber cables must be protected against mechanical injury in accordance with Article 760. [SIG-FUN]

NOTE: The installation of all MNS wiring and other means of system communicating pathways should take into account the MNS manufacturer's published installation instructions and the limitations of the applicable product listings or approvals. [SIG-FUN]

E.2.3.12 Grounding.

E.2.3.12.1 Systems should test free of grounds unless otherwise permitted by E.2.3.12.2. [SIG-FUN]

E.2.3.12.2 Parts of circuits or equipment that are intentionally and permanently grounded to provide ground-fault detection, noise suppression, emergency ground signaling, and circuit protection grounding should be permitted. [SIG-FUN]

E.2.3.13 Initiating Devices. Initiating devices of the manual or automatic type should be selected and installed so as to minimize nuisance alarms. [SIG-FUN]

E.2.3.13.1 Non-fire-emergency manual actuating stations should be listed to ANSI/UL 2017, *Standard for General Purpose Signaling Devices and Systems.* [SIG-IDS]

E.2.3.13.2 Dedicated non-fire emergency manual-actuating boxes should have tactile markings, be of a contrasting color to manual fire alarm boxes on the protected premises, and not be red. [SIG-IDS]

E.2.3.13.3 Non-fire emergency manual-actuating boxes should be installed in accordance with 5.13.3 through 5.13.5. [SIG-IDS]

E.2.3.14 Location and Mounting. Devices and appliances should be located and mounted so that accidental operation or failure is not caused by vibration or jarring. [SIG-FUN]

E.2.3.15 Restoration to Normal. All apparatus requiring rewinding or resetting to maintain normal operation should be restored to normal as promptly as possible after each alarm and kept in normal condition for operation. [SIG-FUN]

E.2.3.16 Zoning and Annunciation. [SIG-FUN]

E.2.3.16.1 Alarm Indication. The location of an activated initiating device should be visibly and audibly indicated at the building control unit, and at the central control station when provided. [SIG-FUN]

E.2.3.16.2 Annunciation. All required annunciation means should be readily accessible to responding personnel and should be located as required by the authority having jurisdiction to facilitate an efficient response to the emergency situation. [SIG-FUN]

E.2.3.16.3 Display. Visual annunciators should be capable of displaying all zones in alarm. If all zones in alarm are not displayed simultaneously, there should be visual indication that other zones are in alarm. [SIG-FUN]

E.2.3.16.4 Zoning. MNS zones should be established on the basis of a detailed risk assessment. The risk assessment should address zoning of each building and multiple buildings. [SIG-FUN]

E.2.3.16.5 Multiple Buildings. If the system serves more than one building, each building should be independently zoned. [SIG-FUN]

E.2.3.17 Monitoring Integrity. System monitoring for integrity should meet the criteria in E.2.3.17.1 through E.2.3.17.3. [SIG-FUN]

E.2.3.17.1 Monitoring Integrity of Installation Conductors, Other Signaling Channels and Other Communication Pathways. Unless otherwise permitted or required, all means of interconnecting equipment, devices, and appliances and wiring connections should be monitored for the integrity of the interconnecting conductors or equivalent path so that the occurrence of a single open or a single ground-fault condition in the installation conductors or other signaling channels and their restoration to normal should be automatically indicated within 200 seconds. [SIG-FUN]

Copyright National Fire Protection Association
Provided by IHS under license with NFPA
No reproduction or networking permitted without license from IHS
Not for Resale

E.2.3.17.1.1 Alternate methods, such as redundancy or increased system reliability, that achieve the desired statistical availability may be acceptable in lieu of monitoring the integrity of circuits, signaling channels, or communication pathways. [SIG-FUN]

E.2.3.17.1.2 Monitoring for integrity should not be required for connections to and between supplementary system components, provided that single open, ground, or short-circuit condition of the supplementary equipment or interconnecting means, or both, do not affect the required operation of the MNS. [SIG-FUN]

E.2.3.17.1.3 Monitoring for integrity should not be required for the circuit of an alarm notification appliance installed in the same room with the central command center, provided that the notification appliance circuit conductors are installed in conduit or are equivalently protected against mechanical injury. [SIG-FUN]

E.2.3.17.1.4 Monitoring for integrity should not be required for a trouble signal circuit. [SIG-FUN]

E.2.3.17.1.5 Monitoring for integrity should not be required for the interconnection between listed equipment within a common enclosure. [SIG-FUN]

E.2.3.17.1.6 Monitoring for integrity should not be required for the interconnection between enclosures containing control equipment located within 6 m (20 ft) of each other where the conductors are installed in conduit or equivalently protected against mechanical injury. [SIG-FUN]

E.2.3.17.1.7 Monitoring for integrity should not be required for the conductors for ground detection where a single ground does not prevent the required normal operation of the system. [SIG-FUN]

E.2.3.17.1.8 Monitoring for integrity should not be required for the interconnecting wiring of a stationary computer and the computer's keyboard, video monitor, mouse-type device, or touch screen, as long as the interconnecting wiring does not exceed 2.4 m (8 ft) in length; is a listed computer/data processing cable as permitted by NFPA 70, *National Electrical Code*; and failure of cable does not cause the failure of the required system functions not initiated from the keyboard, mouse, or touch screen. [SIG-FUN]

E.2.3.17.1.9 Interconnection means should be arranged so that a single break or single ground fault does not cause an alarm signal. [SIG-FUN]

E.2.3.17.1.10 Unacknowledged alarm signals should not be interrupted if a fault on an initiating device circuit or a signaling line circuit occurs while there is an alarm condition on that circuit.

Exception: Circuits used to interconnect MNS control equipment. [SIG-FUN]

E.2.3.17.1.11 An open, ground, or short-circuit fault on the installation conductors of one alarm notification appliance circuit should not affect the operation of any other alarm notification circuit. [SIG-FUN]

E.2.3.17.1.12 Unless otherwise permitted or required by E.2.3.17.1.12(A) or E.2.3.17.1.12(B), the occurrence of a wire-to-wire short-circuit fault on any alarm notification appliance circuit should result in a trouble signal at the protected premises. [SIG-FUN]

(A) A trouble signal should not be required for a circuit employed to produce a supplementary local alarm signal, provided that the occurrence of a short circuit on the circuit in no way affects the required operation of the MNS. [SIG-FUN]

(B) A trouble signal should not be required for the circuit of an alarm notification appliance installed in the same room with the central control equipment, provided that the notification appliance circuit conductors are installed in conduit or are equivalently protected against mechanical injury. [SIG-FUN]

E.2.3.17.1.13 Speaker circuits used for mass notification that are not fire alarm circuits should be exempt from the survivability requirements of this section. [SIG-PRO]

E.2.3.17.2 Monitoring Integrity of Emergency Voice/Alarm Communications Systems. Where speaker amplifier and tone-generating equipment are used to produce audible MNS signals, E.2.3.17.2(A) through E.2.3.17.2(C) should apply.

(A) When primary power is available, failure of any audio amplifier should result in an audible trouble signal.

(B) When an alarm is present and primary power is not available (i.e., system is operating from the secondary power source), failure of any audio amplifier should result in an audible trouble signal.

(C) When provided, failure of any tone-generating equipment should result in an audible trouble signal.

Exception: Tone-generating and amplifying equipment enclosed as integral parts and serving only a single, listed loudspeaker should not be required to be monitored. [SIG-FUN]

E.2.3.17.3 Monitoring Integrity of Power Supplies. [SIG-FUN]

E.2.3.17.3.1 Unless otherwise permitted or required, all primary and secondary power supplies should be monitored for the presence of voltage at the point of connection to the system. Failure of either supply should result in a trouble signal in accordance with 4.4.3.5. The trouble signal also should be visually and audibly indicated at the protected premises. [SIG-FUN]

E.2.3.17.3.2 Monitoring should not be required for a power supply for supplementary equipment. [SIG-FUN]

E.2.3.17.3.3 Monitoring should not be required for the neutral of a three-, four-, or five-wire ac or direct current (dc) supply source. [SIG-FUN]

E.2.3.17.3.4 Monitoring should not be required for the output of an engine-driven generator that is part of the secondary power supply, provided the generator is tested weekly in accordance with Chapter 10. [SIG-FUN]

E.2.3.17.3.5 MNS should be arranged to delay transmission of primary power failure signals for a period ranging up to 180 minutes.

Exception: Where delay of the signal is prohibited by the authority having jurisdiction, delay of the transmission should not be provided. [SIG-FUN]

E.2.4 Documentation. [SIG-FUN]

E.2.4.1 Approval, and acceptance should be in accordance with 4.5.1.1, 4.5.1.2, and 4.5.1.3. [SIG-FUN]

NOTE: A form similar to the record of completion form, Figure 4.5.2.1, referenced in 4.5.1.3 will need to be developed for MNS applications. [SIG-FUN]

E.2.4.2 Every system should include the documentation required by 4.5.2.2, 4.5.2.3, and 4.5.2.4. [SIG-FUN]

Copyright National Fire Protection Association
Provided by IHS under license with NFPA
No reproduction or networking permitted without license from IHS
Not for Resale

E.2.4.3 Voltage and amplifier load calculations should be prepared and submitted to the authority having jurisdiction. [SIG-FUN]

E.2.4.4 Compliance of the completed installation with the recommendation of this annex should be in accordance with 4.5.2.4. [SIG-FUN]

E.2.4.5 An as-built plans cabinet should be provided and should include the following:

(1) Shop drawings (as-built)
(2) Complete set of operations and maintenance manuals for all components
(3) Product cut sheets for each component
(4) Copies of all inspection and commissioning reports [SIG-FUN]

E.2.4.5.1 The cabinet should be sized so that it can neatly contain all necessary documentation, including future inspection and service reports. [SIG-FUN]

E.2.4.5.2 The cabinet should be maintained accessible to authorized personnel only. [SIG-FUN]

E.2.4.6 Records. Records should comply with 4.5.3 and Section 10.6. [SIG-FUN]

E.2.5 Impairments. Impairments should comply with Section 4.6. [SIG-FUN]

E.2.6 Inspection, Testing, Permanent Records, and Maintenance. MNSs should be inspected, tested, and maintained in accordance with the manufacturer's recommendations. [SIG-FUN]

E.3 System Features. [SIG-PRO]

E.3.1 Fire Alarm Systems. [SIG-PRO]

E.3.1.1 The installation a MNS should comply with the recommendations of this annex. Combination of MNSs with fire alarm systems are permitted and must meet the requirements of 6.8.4. [SIG-PRO]

NOTE: MNSs can consist of fully independent systems with minimal or no interface with the building fire alarm system, systems that report trouble and supervisory signals through the fire alarm system, systems that share audible and visible notification circuits and appliances with the fire alarm system, or combination mass notification and fire alarm systems. [SIG-PRO]

E.3.1.2 Interconnection of protected premises fire safety functions with the MNS should comply with Section 6.16. [SIG-PRO]

E.3.2 Supplementary Functions. Supplementary functions, including the use of the MNS for general paging, background music, or other non-emergency functions are permitted and must not interfere with the performance requirements of fire alarm systems. [SIG-PRO]

E.3.3 Multiple Buildings. If the system serves more than one building, the system should be capable of providing messages to one individual building or to combinations of more than one building at any given time. [SIG-PRO]

E.3.4 System Priorities. Priority levels should be established on the basis of the nature of the message to be administered. [SIG-PRO]

E.3.5 Voice Messages. [SIG-PRO]

E.3.5.1 MNSs should provide intelligible voice messages and meet the requirements of 7.4.1.4. [SIG-NAS]

NOTE: In certain situations, it is important to provide a distributed sound level with minimal sound intensity variations to achieve an intelligible voice message. This differs from past fire alarm design practice that used a few speakers with loud signals. Non-emergency systems design practice is to use more speakers and less sound intensity from each speaker. Besides improving intelligibility of the message, this approach minimizes annoyance to building occupants from the system and lessens the likelihood of tampering with the system by occupants because of speakers being too loud. In other applications, such as outdoor signaling where reverberation is not a problem, intelligibility may be achieved by using fewer appliances or clusters of appliances covering larger areas. [SIG-NAS]

Intelligibility is a complex function of the source audio, the acoustic response of the architectural features and materials of the immediate vicinity, and the dynamics created by the room's occupants. There are many techniques to improve intelligibility and many are being and will be developed. Spacing speakers closely can be an intelligibility-enhancing technique but may occasionally lead to opposite results when improperly designed. There are several techniques using special throw features that do not use closely spaced speakers but rather use the room/space acoustic response in their favor. [SIG-NAS]

E.3.5.2 When actuated, recorded or live mass notification voice messages should take priority over fire alarm messages and signals. Should the fire alarm system be in the alarm mode when recorded voice message or audible signals are sounding, and the MNS is actuated, it should temporarily cause deactivation of all fire alarm–initiated audible messages or signals during the time period required to transmit the emergency message. Deactivation of fire alarm audible and visual notification signals should cause a supervisory signal for each notification zone and extender control unit affected in the fire alarm system. [SIG-PRO]

NOTE: The temporary fire alarm deactivation function format should occur only when both the fire alarm system is in an alarm condition and a voice message is to be transmitted by the MNS. Only the fire alarm–initiated audible message or signal (tone) should be deactivated. All other features of the fire alarm system should remain unaffected. [SIG-PRO]

E.3.5.3 The MNS should provide the capability for the building occupants and remotely located emergency/public safety personnel to activate pre-recorded messages in response to life threatening events. [SIG-PRO]

NOTE: As a general practice, the number of message selection switches should be limited to a relatively few so that the majority of occupants in the building can utilize the system with only minimal familiarity. [SIG-PRO]

E.3.6 Visible Signaling. [SIG-NAS]

E.3.6.1 MNSs should utilize visible appliances that are activated when emergency messages are being transmitted. [SIG-NAS]

E.3.6.1.1 Where strobes are used as visible appliances, they should meet the requirements of Section 7.5 or Section 7.6 as appropriate, except that other color visible notification devices are permitted. The lens color could be amber. [SIG-NAS]

E.3.6.1.2 Visible notification appliances should be of a sufficient quantity and intensity and located so as to meet the intent of the design. [SIG-NAS]

Copyright National Fire Protection Association
Provided by IHS under license with NFPA
No reproduction or networking permitted without license from IHS
Not for Resale

NOTE: Visible appliances used for fire alarm signaling are required by Chapter 7 to be clear or nominal white in color. In some scenarios, there may be separate strobes used as part of the MNS. In other scenarios, the same strobe may be used for both fire and non-fire alerting. Where the strobe is used to signal occupants to seek information or instructions, it could be clear, nominal white or other color as required by the emergency plan for the area or building. For example, an emergency plan may dictate that clear or white strobes be used to indicate the need for total evacuation. Four variables to consider in the design of notification systems are (1) fire versus (2) non-fire, and (3) evacuate versus (4) seek additional information or instructions. Where visible signaling methods other than strobes are used, slower flash rates than those prescribed for fire alarm or alternate flash patterns rather than steady periodic flashing could be used. [SIG-NAS]

E.3.6.2 Visible signals from MNS appliances should be synchronized per Section 7.5. [SIG-NAS]

E.3.6.3 Non-fire mass notification voice messages should temporarily deactivate visible notification appliances that are used exclusively for fire alarm signaling per E.3.5.2. [SIG-NAS]

E.3.6.4 Where textural visible appliances are provided, they should meet the requirements of Section 7.9. [SIG-NAS]

E.3.6.5 Where tactile appliances are provided, they should meet the requirements of Section 7.10 or other performance standards applicable to the type of appliance. [SIG-NAS]

E.3.7 Operating Consoles. MNSs should include system-operating consoles for occupants to readily access and originate messages in emergency situations. The use of break-glass-type enclosures to house the operating consoles for the system, or equivalent protection against unauthorized use, should be permitted. [SIG-PRO]

NOTE: Consideration should be given to whether or not operating consoles should be made readily available to the building occupants. In some situations it might be desirable to reduce the time to alert other occupants. Use of the facility telephone system should not be used for the transmission of emergency messages over the MNS, but could be used for general paging or other emergency functions, including periodic practice drills. [SIG-PRO]

E.4 Central Control Station(s). The recommendations of Section E.4 apply to the communications methods and equipment used to receive and transmit information between premises sources or premises systems and the central control station(s) (CCS). [SIG-SSS]

NOTE: For the purposes of this annex a central control station (CCS) is considered to be a mass notification system facility(s) with communications and control equipment serving more than one building where responsible authorities receive information from premises sources or systems or from (higher level) regional or national sources or systems and then disseminate appropriate information to a building, multiple buildings, outside campus areas, or a combination of these in accordance with the action plan established for the premises. A MNS might include at least one CCS with optional secondary/alternate CCSs. [SIG-SSS]

E.4.1 Communications between the CCS and regional or national sources or systems might also be established but are not within the current scope of this section. [SIG-SSS]

E.4.2 The recommendations of Section E.4 do not apply to the CCS facility construction. [SIG-SSS]

E.4.3 The power supply for the CCS should include an uninterrupted power source with capacity sufficient to support the action plan established for the premises. [SIG-SSS]

E.4.4 The CCS should have the ability to monitor inputs/sensors and control output devices automatically, manually, or automatically with operator override. [SIG-SSS]

E.4.5 The CCS should be staffed by qualified personnel who would monitor the system and take action appropriate to the action plan established for the premises. [SIG-SSS]

E.4.6 The CCS should monitor the functional integrity of the entire system. Monitoring should include the following:

(1) The integrity of the communications channels
(2) Status of primary and second powers sources
(3) Status of local control unit [SIG-SSS]

E.4.7 The system should survive and continue to operate even if some of the nodes are out of commission. The system should have redundant data communication paths. [SIG-SSS]

E.4.8 The use of an alternate/secondary CCS would enhance system survivability. [SIG-SSS]

E.4.9 The CCS should be capable of maintaining an event log, service logs, and status logs. [SIG-SSS]

E.4.10 Inspection, testing, and maintenance should be performed on a periodic basis to verify the proper operation of the system. This might be accomplished through ordinary use of the system as outlined in Section 10.3. [SIG-SSS]

Annex F NEMA SB 30, *Fire Service Annunciator and Interface*

(Reprinted by permission of the National Electrical Manufacturers Association)

This annex is not a part of the requirements of this NFPA document but is included for informational purposes only.

© Copyright 2005 by the National Electrical Manufacturers Association. All rights including translation into other languages, reserved under the Universal Copyright Convention, the Berne Convention for the Protection of Literary and Artistic Works, and the International and Pan American Copyright Conventions. Reprinted by permission.

NOTICE AND DISCLAIMER. *The information in this publication was considered technically sound by the consensus of persons engaged in the development and approval of the document at the time it was developed. Consensus does not necessarily mean that there is unanimous agreement among every person participating in the development of this document.*

The National Electrical Manufacturers Association (NEMA) standards and guideline publications, of which the document contained herein is one, are developed through a voluntary consensus standards development process. This process brings together volunteers and/or seeks out the views of persons who have an interest in the topic covered by this publication. While NEMA administers the process and establishes rules to promote fairness in the development of consensus, it does not write the document and it does not independently test, evaluate, or verify the accuracy or completeness of any information or the soundness of any judgments contained in its standards and guideline publications.

NEMA disclaims liability for any personal injury, property, or other damages of any nature whatsoever, whether special, indirect, consequential, or compensatory, directly or indirectly resulting from the publication, use of, application, or reliance on this document. NEMA disclaims and makes no guaranty or warranty, express or implied, as

Copyright National Fire Protection Association
Provided by IHS under license with NFPA
No reproduction or networking permitted without license from IHS
Not for Resale

to the accuracy or completeness of any information published herein, and disclaims and makes no warranty that the information in this document will fulfill any of your particular purposes or needs. NEMA does not undertake to guarantee the performance of any individual manufacturer or seller's products or services by virtue of this standard or guide.

In publishing and making this document available, NEMA is not undertaking to render professional or other services for or on behalf of any person or entity, nor is NEMA undertaking to perform any duty owed by any person or entity to someone else. Anyone using this document should rely on his or her own independent judgment or, as appropriate, seek the advice of a competent professional in determining the exercise of reasonable care in any given circumstances. Information and other standards on the topic covered by this publication may be available from other sources, which the user may wish to consult for additional views or information not covered by this publication.

NEMA has no power, nor does it undertake to police or enforce compliance with the contents of this document. NEMA does not certify, test, or inspect products, designs, or installations for safety or health purposes. Any certification or other statement of compliance with any health or safety-related information in this document shall not be attributable to NEMA and is solely the responsibility of the certifier or maker of the statement.

F.1 General. This standard was developed jointly by the National Institute of Standards and Technology, Building and Fire Research Laboratory, NEMA, and the U.S. Fire Alarm industry to guide the development of uniform equipment for use by the fire service to display information of use during fires or other emergencies.

F.1.1 Scope. This standard covers the design, operation, and arrangement of equipment intended to display data and status of building systems, and to provide certain control functions. This standard addresses displays installed in buildings or other locations specified by the fire service for their use in responding to fires and other emergencies.

The document scope presents information for fire fighters in the roles of "First Responder" (the first fire command at the scene) and "Incident Commander" (the ongoing fire command at the scene.)

F.1.2 Intent. The intent of this standard is to provide a uniform set of requirements that result in equipment sufficiently similar across different manufacturers' systems that fire service personnel trained in the general arrangement and use of these systems be able to operate and extract information from the equipment in various buildings with a fair degree of familiarity and confidence without the need for specialized training on each individual system.

It is anticipated that firefighter interface training will become a part of all new firefighter training programs. It is also the intent that the training required be minimal and the interactions of the fire service with the systems be as intuitive as possible. Finally, it is the intent that the equipment, displays and interactions be based, as much as is sensible for quick understanding, on common fire fighter knowledge.

F.1.3 Purpose. The purpose of this equipment is to provide real-time information of value in making tactical decisions and monitoring the safety of firefighters. These goals are met through interaction with the equipment by both First Responders and Incident Commanders.

The information of value to the First Responder arriving on the scene must be readily available for quick processing, planning and response.

The Incident Commander, also, must have information readily available for quick processing, planning and response. The Incident Commander may continue to process information, plan and direct the incident through out the emergency. They may spend more time with the system using it as an ongoing tactical tool after the initial response has commenced.

Both the user interactions required for the First Responder's quick assessment and the Incident Commander's ongoing analysis should be supported in uniform, consistent and intuitive ways. The design of the system interactions shall not change based on the user role.

F.2 Standards and Codes. The following standards and codes are referenced explicitly or implicitly regarding the design, installation, testing, maintenance, and use of these systems and their components. These were used when developing this standard, but are not necessarily required practice for manufacturers.

F.2.1 Building Codes.

IBC-ICC, *International Building Code* (IBC-ICC)

NFPA 5000®, Building Construction and Safety Code®

F.2.2 Underwriters Laboratories (UL) Standards.

UL 864, *Control Units for Fire Protective Signaling Systems*

UL 268, *Smoke Detectors for Fire Protective Signaling Systems*

UL 521, *Heat Detectors for Fire Protective Signaling Systems*

F.2.3 National Fire Protection Association (NFPA) Standards.

NFPA 72, National Fire Alarm Code®

NFPA 70, *National Electrical Code®*

NFPA 13, *Standard for the Installation of Sprinkler Systems*

NFPA 25, *Standard for the Inspection, Testing, and Maintenance of Water-Based Fire Protection Systems*

NFPA 90A, *Standard for the Installation of Air-Conditioning and Ventilating Systems*

NFPA 92A, *Standard for Smoke-Control Systems Utilizing Barriers and Pressure Differences*

NFPA 92B, *Standard for Smoke Management Systems in Malls, Atria, and Large Spaces*

NFPA *101, Life Safety Code®*

F.2.4 American Society of Mechanical Engineers (ASME) Standards.

ASME A17.1, *Safety Code for Elevators and Escalators*

ASME A17.4, *Guide for Emergency Personnel*

F.2.5 Standards Related to People with Disabilities.

ICC/ANSI A117.1, *Standard on Accessible and Useable Buildings and Facilities*

ADAAG, *U.S. Department of Justice, Americans with Disabilities Act Accessibility Guidelines*

F.2.6 American Society of Heating, Refrigerating and Air-Conditioning Engineers (ASHRAE) Standards.

ASHRAE 135, *BACnet, A Data Communication Protocol for Building Automation and Control Networks*

F.2.7 Arcnet Trade Association (ATA) Standards.

ANSI/ATA 878.1-1999, *ARCNET Local Area Network*

F.2.8 Electronic Industries Alliance (EIA) Standards.

ANSI/EIA 709.1, *LonWorks Control Networking Standard*

F.3 Equipment. Whether facilities are very small, mid-size, large, or monumental (very large), the same basic rules for display and interface must apply. Fire alarm systems can range

--`,,```,,,,````-`-`,,`,,`,`,,`---

Copyright National Fire Protection Association
Provided by IHS under license with NFPA
No reproduction or networking permitted without license from IHS

Not for Resale

from being small, non-addressable panels having very basic and limited functionality to the most sophisticated computerized multiplex systems. The system type, size, design, and specified functionality are factors in determining the presentation methods for the annunciation and control interface. However, keeping the goals of ease-of-use and interoperability in mind, user interactions regardless of the equipment and display systems must focus on common guidelines wherever feasible.

This section focuses on system power, location, and security.

F.3.1 Power and Communications Redundancy. To achieve the goal of providing real-time information of value in making tactical decisions to the fire service, the system should be powered up at all times. In order to be fault tolerant and reliable during emergencies, the system must be powered from at least two independent sources and be able to maintain communications during any single fault.

F.3.1.1 Duration of standby power shall be at least equal to that of the fire alarm system to which it is connected.

F.3.1.2 Communication shall be by at least two independent paths (routed separately through protected construction) or one trunk and one wireless link, or any combination so arranged that any single failure of one trunk or wireless link shall not result in loss of function.

F.3.2 Fixed Location(s). The equipment shall be installed in the location designated by the responsible fire department. The primary display location would most likely be in a fire command station, building lobby, or other location from which the responding fire service would expect to establish incident command.

F.3.3 Wireless Applications. It should be recognized that the specific conditions of an incident may require that incident command be moved to another location for the safety or efficiency of operations. Additionally, some departments may wish to be able to access information from dispatch, headquarters, mobile command centers, or even from vehicles in route to an incident. Thus it is advantageous for these systems to incorporate wireless technologies and multi-platform software capable of such use.

F.3.4 Remote Access. Remote access is a feature desired by the fire service. Browser interfaces are becoming ubiquitous and can use existing standards such as DHTML (Dynamic Hypertext Markup Language) with CSS (Cascading Style Sheets) or XML (eXtensible Markup Language) with XSL (eXtensible Stylesheet Language). Systems that utilize these, or other, existing browser display standards may have the flexibility to provide remote information access via many common devices that implement common browser protocols. These common devices include, but are not limited to, touch screen panels, PDAs, and cellular phones.

F.3.5 Security Considerations. The systems addressed by this standard display information that could be invaluable to terrorists, burglars, or other parties. Information about a building's structure, organization, and alarm systems can be used to prepare attacks. As such, unauthorized access to these must be inhibited.

While it may not be possible to provide perfect security, this must not be used as an excuse for providing no security. Systems that conform to this standard cannot be required to solve every security need listed below. The list is provided as a guideline for minimum set of security aspects to be considered. The underlying principle is that every interface presents a potential security problem. Anytime another system, file, or hardware is connected, a security hole could be created. Security considerations:

(1) Physical access to systems.
(2) How access to systems is authorized, and how these authorization systems could be fooled or bypassed.
(3) Access to building information (including floor plans, access routes, water supplies, hazardous materials).
(4) Access to alarm and emergency response system information (including locations of detectors, fire-suppression systems, emergency response plans).
(5) Ability to read or change files used by the system, thereby ensuring that only authorized personnel can modify these files.
(6) If data is transmitted between systems (especially over public networks), ensurance that it cannot be intercepted and read, or intercepted and changed.

F.4 User Interaction. This section's primary purpose is to provide guidelines that result in interfaces that are consistent in their operation and use. The primary characteristics of this guideline address the need for uniformity, consistency, and intuitiveness of user interactions. In cases where the user interface incorporates switches and lights the recommendations of this section should be used wherever applicable.

The guidelines in this section are based on the firefighters' capabilities and limitations as described in F.4.1.

In order for the firefighter to be able to understand the situation well enough to act safely and effectively, the fire service interfaces must adhere to the following guidelines.

(1) Information shall be presented uniformly. For example, labels and colors should be consistent throughout the interface.
(2) Information that the firefighters frequently need shall be always displayed.
(3) Information that the firefighters do not need or need infrequently shall not be displayed. If this information may be important, it should still be available (perhaps with a single button press).
(4) Physical input devices (touch screen, keyboard, mouse) shall have minimal, intuitive actions.
    (a) Touch screen input shall be limited to single touch only. It shall not require dragging, holding down of the finger or stylus, nor double tapping of the screen.
    (b) Mouse input shall be limited to moving the cursor and clicking a single button. If the mouse has multiple buttons, they shall all have the same function.
    (c) Mouse input shall not require holding down a button while moving nor double-clicking.
    (d) Keyboard input shall not be used unless no simpler mechanism is available.
    (e) Keyboard input shall not require the use of any shortcuts (such as holding down the control key while pressing the 'S' key).
(5) The interface shall display the recommended information in a size and with a contrast ratio that makes it easily readable by the operator under any expected lighting condition in the location where it is installed.

F.4.1 Firefighter Capabilities and Limitations. When firefighters arrive on the scene of a building fire emergency, their first need is to gather information in order to accurately assess the situation. Speed of assessment is of the essence. The quicker the seat of the fire and its progression is identified, the quicker an attack on the fire can be planned and launched. With speed

--`,,```,,,,````-`-`,,`,,`,`,,`---
Copyright National Fire Protection Association
Provided by IHS under license with NFPA
No reproduction or networking permitted without license from IHS
Not for Resale

and accuracy of response comes a reduction in loss of property and life.

In order to meet the goals of speed and accuracy, firefighter displays must be designed in a way that considers the capabilities and limitations of firefighters and the constraints under which they operate. Specific capabilities of concern include:

(1) Computer skills. Many firefighters will have little familiarity with computers and related technology. Displays and user interfaces need to be extremely simple and easy to use and not make any assumptions about the firefighter's familiarity with standard user interface paradigms.
(2) Training. Designs for firefighter displays should not assume that interface complexity will be overcome by training. There may be little or no training. Also, training on the display may be forgotten under the stress of real tactical conditions.
(3) Vision. Some firefighters may have impaired and uncorrected reading vision. Display design must consider this limitation in scaling drawings, symbols and text.

F.4.2 Presentation Guidelines. All fire service interfaces shall follow these guidelines whenever the system's equipment has capabilities to support them. The resulting consistency of presentation will reduce training and ensure efficient comprehension of information.

F.4.2.1 Icons. One of the ways to achieve consistency in the fire service interface is by means of a standard set of icons. These icons must be capable of clean rendering on a range of display technologies from color to monochrome, and varying in display size and resolution. Most importantly, these standard icons must be intuitive to the firefighter.

A good icon has the following properties:

(1) Mimics both the physical appearance and the function or action of the object it represents
(2) Clearly represents the state of the object if it is an object that can assume more than one state
(3) Uses only widely recognized conventions for color and shape
(4) Is not directional and can be used without rotation
(5) Is not culture-bound
    (a) No embedded text characters
    (b) No culture-specific metaphors
(6) Is recognizable by a high percentage of firefighters

The icons in Figure F.4.2.1 resulted from user feedback obtained during a series of fire service display usability tests conducted with fire service incident commanders and a series of subsequent usability tests that compared alternative representations of the same icon. The icons shown in Figure F.4.2.1 are those that performed the best during the latter tests.

For further information refer to Figure F.4.2.1.

F.4.2.2 Text. Text shall be presented in a large font with no serifs or other decoration. The size of the font will vary depending on the physical display device and expected viewing conditions. Text should not be presented in all capital letters, unless a standard acronym such as 'NFPA', since this slows reading.

F.4.2.3 Abbreviations. Abbreviations shall be avoided wherever possible. If abbreviations are used, they shall be made as clear as possible. In general, truncated abbreviations (e.g., temperature = temp) are more recognizable than concatenated abbreviations (e.g., temperature = tmp).

F.4.2.4 Colors. The use of color shall be minimized. Extraneous use of color reduces the usability of the display by inappropriately highlighting items of lesser importance and making it more difficult to notice the items of greater importance.

Where possible, color shall be a redundant visual coding of information. Color should be used in conjunction with another coding dimension, such as shape, texture, or text.

F.4.2.5 Modes. The displays shall not make use of modes. Modes cause the display to function differently in response to the same inputs, which increases the users' confusion. All interactions shall remain consistent regardless of the state of the system. For instance, a system that uses a pair of up and down arrows to scroll through pages of information should not have a separate state of operation where those two arrow keys are used to change the contrast of the screen. Changing the behavior of controls this way is especially confusing to users if the screens in the separate modes are similar in appearance.

F.4.2.6 Display Units. Quantitative display of values shall be in the units specified by the fire department expected to use the system. It is important that the system not overwhelm the operator with quantitative data. Therefore, access to quantitative values shall require manual action by the operator.

F.4.2.7 Query for Information. Selecting an icon or button shall result in the display of further information. Usually this is done by touching or clicking or by pressing an associated switch.

F.5 Fire Service Interface for Small Systems. Smaller and less complex buildings may not require a full Incident Commander Display, such as that described in Section F.6 to support effective fire service situation assessment and decision-making. This section describes a fire service interface for such small systems.

F.5.1 Required Information Elements and Functions. The following is the minimum set of information elements and functions that must be supported by the Fire Service Small System Interface. This list of required functions includes only those that are widely deployable today.

The minimum set of required information elements and functions includes:

(1) Display of information describing detected fire events including: time; date; floor number and room number or zone; type of detector (smoke-ion, heat, etc.); detector identification number; indication of alarm acknowledgement.
(2) Display of information describing supervisory and trouble events.
(3) An interactive control mechanism for navigating through the above events.
(4) A display indicating that the panel is powered up, no alarms exist and system condition is normal.
(5) A display indicating that a fire condition exists.
(6) A display indicating that a trouble/supervisory condition exists.
(7) A control for acknowledging events.
(8) A control for silencing evacuation devices in the building.
(9) A control for resetting the building fire alarm system to its normal state.

F.5.2 Layout. General layout. The fire service interface should be enclosed within a red border of approximately 6.4 mm (0.25 in.) width. The words "FIRE SERVICE INTERFACE" should be located at the top center of the border in bold capital letters approximately 6.4 mm (0.25 in.) high. All controls and indicators within this border should be located and labeled as

Copyright National Fire Protection Association
Provided by IHS under license with NFPA
No reproduction or networking permitted without license from IHS
Not for Resale

Smoke detector, activated or in alarm	
Smoke detector, normal state	
Smoke detector, troubled, out of service	
Hazardous materials	 Specific alternative:  for biological hazard  for radioactive hazard
Elevators	
Fire phones; emergency phone	
Gas tank; high pressure gas storage	
Fire	
Manual pull; fire pull; pull station	

Keybox; lockbox	
Halon fire suppression system; Halon; Halon gas	
Locked door; locked	
Alarm went off; state of alarm	
Hydrant	
Smoke vent; vent; ventilation	
Exhaust fan	
Stairs pressurized; escape stairs; evacuation stairs	
Heat detector — activated	
Chemical detector — activated	

NFPA Editor's Note: The color versions of these display icons contained in NEMA SB 30-2005 are reproduced here in gray scale.

FIGURE F.4.2.1 Recommended Fire Service Display Icons.

described herein. Additional controls and indicators for the system can be provided but should be located outside of the red border.

The display consists of the following windows and fields:

(1) Event Display Window. This window shall be located in the upper center area of the interface, as shown in Figure F.5.2. The display is intended to show the minimum information associated with each detected fire, supervisory or trouble condition.
(2) Navigation and Acknowledge Area. The area adjacent to the left-hand side of the display shall be dedicated to controls for navigating the event display and a prominent button for acknowledging individual events. Between the navigation area and the button assigned to acknowledge the individual alarms selected in the display to the right is a slightly less prominent button for acknowledging all events. This button would acknowledge all currently unacknowledged alarms, troubles and supervisory indications in the events list. A pair of Acknowledgement indicators shall be located immediately above the Acknowledge Selected Event button.
(3) System Control and Status Indicator Area. The area on the far right-hand side of the display shall be dedicated to controls and indicators for the functions Reset System and Silence Evacuation Devices.
(4) Optional Function Keys. Any additional function keys required to interact with the information in the Event Display Window shall be located below the Event Display Window.

F.5.3 Interaction.

F.5.3.1 Logical Grouping of Features. Principles of logical spatial grouping shall be applied to the display layout. First, the most important or most frequently used features are

Copyright National Fire Protection Association
Provided by IHS under license with NFPA
No reproduction or networking permitted without license from IHS
Not for Resale

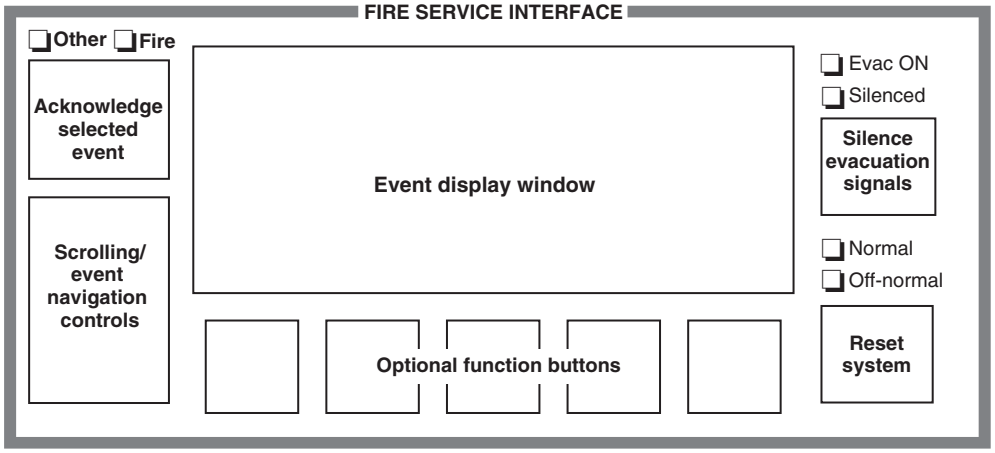

FIGURE F.5.2 Alarm Event Display.

placed in the most central location. In the Small System Fire Service Interface, this is the event display window, its navigation controls, and the Acknowledge button. Features of less importance or less frequently used, such as the System Reset and Silence Evac. controls, are relegated to the periphery. Second, buttons, indicators, and displays that are closely coupled in their use are grouped closely together. Thus, the navigation controls for the Event Display Widow, the Acknowledge button and the Acknowledge indicators are all grouped together in a manner that facilitates the behavior of navigating through events and acknowledging them.

F.5.3.2 Button Size and Layout. Whether implemented as soft keys on a touch screen or as hard keys on a panel, buttons shall be at least 0.75 in. square and separated from one another by a minimum of 0.25 in. of space. The Acknowledge button shall be larger than other buttons to reflect its importance and frequency of use.

F.5.3.3 Event Display Interaction. The sequential display presents alarm and other alerting events in the form of a list of alphanumeric messages. Each event message shall consist of an icon indicating the type of event (fire, supervisory or trouble event) followed by the description of the event. For all event messages, the icons shall flash until acknowledged. If the display supports color, the icons indicating fire shall be red and flash until acknowledged and the icons for supervisory and trouble event messages shall be yellow. Events shall be grouped by type with fire events shown first in the list followed by supervisory and trouble events. Within each grouping, events shall be listed in order of time of occurrence, with the most recent listed first.

The list of events shall be scrolled by operating the navigation controls to the left of the display. A message is acknowledged by scrolling to it and then pressing the Acknowledge button to the left of the display. The up-down arrow buttons shown in Figure F.5.3.3 are a good example of an intuitive control for this purpose.

Indicator lights above the Acknowledge Selected Event button flash until all events are acknowledged. These indicators show that there are unacknowledged events remaining somewhere in the list including some that might have scrolled off the screen and are out of view. In that case, the indicators would alert the user that even though all the events in view have been acknowledged, there are still some that have not



FIGURE F.5.3.3 Sequential Display.

been acknowledged. The Fire indicator shall flash red if there are unacknowledged fire event messages remaining in the Event Display Window. The Other indicator shall flash yellow if there are still unacknowledged supervisory or trouble messages in the Event Display Window. When all alarms and alerts are acknowledged, the lights shall go steady. If the Acknowledge All button is pressed, all alarms and alerts are considered acknowledged and thus, the lights shall go steady. When the system returns to normal the lights shall extinguish.

F.5.3.4 Interaction with the System Control and Status Indicator Area.

F.5.3.4.1 Silence Evacuation Devices. The Silence Evacuation Devices feature has two states: Evacuation Devices ON and Evacuation Devices Silenced. Both states shall be shown explicitly by indicator lights. The Evacuation Devices ON indicator shall turn red when the system is in this state. When the state is switched to Evacuation Devices Silenced, the Evacuation Devices ON indicator shall extinguish and the Evacuation Devices Silenced indicator shall turn yellow. When the system is returned to a normal state, both lights shall be off.

F.5.3.4.2 Reset System. The Reset System feature has two states: Normal and Off-Normal. Both states shall be shown explicitly by indicator lights. The Off-Normal indicator shall be activated and illuminate steady yellow when the first off-normal condition appears. It shall remain yellow and steady until the system is reset to normal at which time it shall extinguish. The Normal indicator shall be activated after the system is reset and returns to normal state. Then it shall illuminate steady green. It shall remain on until an off-normal event appears.

F.5.3.5 Interactions with the Additional Function Keys. The row of optional function keys at the bottom of the display provides the possibility of additional interactions with the

Copyright National Fire Protection Association
Provided by IHS under license with NFPA
No reproduction or networking permitted without license from IHS
Not for Resale

Event Display Window. However, for firefighter use, it is strongly recommended that these keys not be used to access and navigate menus. Rather, direct access to information from these keys is recommended. The key nearest the navigational keys shall be used to select an event from the list (sequential display) or the array (simultaneous display). Selecting an event would open a window with additional information about that event. The window shall be placed in the display area in a way that minimally interferes with the users' view of the event list or array. The other function keys shall be used in a similar manner to directly access additional information without the requirement to traverse a menu or change interaction modes. An intuitive and obvious control for closing these information pop-up windows shall be provided.

F.6 Incident Commander Display. The purpose of the Incident Commander Display is to support the fire incident commander's situation assessment task by providing easy access to critical elements of fire incident and building information in a graphical and spatial format that is accessible at the scene of the fire.

F.6.1 Required Functions. The following is the minimum set of information elements and functions that must be supported by the Incident Commander Display. This list of required functions includes only those that are widely deployable today. Functions for which technology is still developing and is not yet widely deployed are included under Optional Functions in F.6.2.

The minimum set of required information elements and functions is:

(1) Display of the location of the fire on a graphical (for example, floor plan) view of the building.
(2) An interactive control to navigate between floors of the building shown on the graphical display and to select the floor of interest for display.
(3) An interactive control to navigate around a single floor of a large or wide building on the graphical display.
(4) Display of the location of building features critical for firefighting on the graphical view of the building. These include:
  (a) Standpipes
  (b) Hydrants
  (c) Firewalls
  (d) Hazardous materials
  (e) Gas shutoffs
  (f) Power shutoffs
  (g) HVAC shutoffs
  (h) Master sprinkler shutoff
  (i) Own location (location of the Incident Commander's Display)
  (j) Elevators and elevator machine rooms (if possible)
  (k) Stairs
  (l) Exits
  (m) Locked exit doors and confirmation that locks have been released
  (n) Points of access to the roof
  (o) Fire phones
  (p) Fire keybox (knox box)
  (q) Pre-positioned firefighting gear
  (r) Airpack refilling stations
  (s) Halon fire suppression systems
  (t) Fuel and compressed gas tanks
  (u) Heavy objects located on the roof such as air handlers and generators
  (v) Annotation to indicate if the roof has steel bar joist or tensioned concrete construction
  (w) The direction NORTH labeled clearly
(5) On the graphical display of the roof-level of the building, display the following information:
  (a) Roof access doors and their condition, locked or not locked
  (b) Any hazardous construction features such as steel bar joists or tensioned concrete. A sample annotation might be "HAZARD: TENSIONED CONCRETE"
  (c) Any large heavy objects such as cooling towers, generators, or air handlers
  (d) Air/smoke evacuation vents or ducts
(6) Graphical display of a building site plan that shows the immediate area surrounding the building and includes the following features: access streets/roads, driveways, parking lots, emergency access pathways such as sidewalks, grassy areas, sufficiently wide and firm to accommodate firefighting vehicles, building entrances, standpipes and primary and secondary hydrants. Large volume hydrants shall be distinguished from standard hydrants.
(7) In a prominent position on the screen, the name and address of the building shall be displayed.
(8) In a prominent position on the screen, a short summary description of the first alarm shall be displayed and shall include: time of initial activation; floor and room or zone in which initial activation occurred; type of detector (smoke, heat, chemical, duct-smoke). For example: 12:01AM Floor 11 Room 11437 Duct-smoke Water flowing

F.6.2 Optional Functions. Beyond the minimum set of information elements and functions discussed above, the Incident Commander Display may provide other information and functions of benefit to the fire service. Some of these optional functions are already supported by the necessary sensor and software technology and are feasible to deploy at the present time. Others are limited by the current availability of the underlying technology and will become options only in the future. In either case, these optional functions pose the problem of potentially overloading the firefighter/user with information and functionality. Therefore, caution must be exercised in adding any of these functions to the already substantial amount of basic information and functionality described in F.6.1.

Optional information elements and functions include:

(1) An alarm list display showing an alphanumeric table of alarm data similar to what is typically shown on fire panels.
(2) A display of building contact information (name and phone numbers) including: building owner; facility manager; HVAC maintenance technician; power company emergency contact; gas company emergency contact; water department emergency contact; State Hazardous Materials Duty Officer.
(3) A display of building information including: commissioning date; primary use; number of occupants — daytime; number of occupants — nighttime; hazardous structures (steel bar joist construction; tensioned concrete in walls or roof).
(4) A display of the location of firefighters inside the building.
(5) Display of individual firefighter identification, physiological condition and qualifications.
(6) A display of gas shutoff information: location of the gas shutoff; current state (ON or OFF); building engineer phone number; local gas company emergency phone number.

Copyright National Fire Protection Association
Provided by IHS under license with NFPA
No reproduction or networking permitted without license from IHS
Not for Resale

(7) A display of electrical power shutoff information: location of the power shutoff; current state (ON or OFF); building engineer phone number; local electrical power company emergency phone number.
(8) A display of master sprinkler shutoff information: location of the master sprinkler shutoff; current state (ON or OFF); building engineer phone number.
(9) Display of elevator information including:
  (a) Layout of the elevators and their identification number (1-N).
  (b) Operating status of each elevator — Operational, Disabled, In Use By Fire Command
  (c) The floors which are served by each elevator
  (d) The current location of each elevator and direction of movement.
(10) Display of information on building occupants. In its simplest form, the total number of occupants remaining in the building. In more complex form, the locations and identity of occupants remaining in the building.
(11) Display of detailed information about hazardous materials housed in the building, including cautions and warnings for firefighting similar to those in NFPA 704 or in MSDS.
(12) A display of water flow in the sprinkler system branch lines or in specific sprinkler heads.
(13) Estimates of heat release rate of the fire and the potential for flashover.
(14) Temperature and visibility distance ($V=1.4D^{0.767}$ where visibility distance V is in meters and D is the optical density per meter) information in the fire zone and other locations in the building such as elevator machine rooms, elevator lobbies, hoistways, and cars.
(15) Status of any smoke control system in the building.
(16) Display of pressure difference in a stairway, hoistway, or zone/floor produced by a smoke control system.
(17) Display of locations of video cameras, and the ability to display the video feed from selected cameras.

F.6.3 Control Functions. Beyond the minimum set of control functions necessary to interact with the display as discussed above in F.6.1 the Incident Commander Display could provide other control functions of benefit to the fire service. These are optional and include:

(1) A control to silence alarms.
(2) Controls that would allow the incident commander to manually control specific HVAC equipment.
(3) Elevator controls that would allow the incident commander to initiate Phase 1 recall (protected) elevator systems.
(4) Controls that would allow the incident commander to manually control gas and power shutoffs.
(5) Controls that would allow the incident commander to manually control the master sprinkler shutoffs.
(6) Controls that would allow the incident commander to select individual paging zones, groups, or all call to receive messages.

F.6.4 Layout. Figure F.6.4 shows the screen layout. The display consists of the following windows and text fields:

(1) Fire Situation Window. In this window a graphical view of the building is shown overlaid with graphical icons to show the locations of active alarms and other fire-relevant building objects.

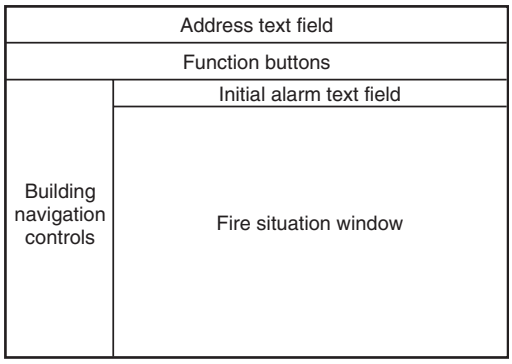

FIGURE F.6.4 Incident Commander Display Layout.

(2) Building Navigation Controls. Immediately to the left of the Fire Situation Window is an area containing an interactive control for navigating between floors in the building and selecting a floor to be shown graphically in the Fire Situation Window.
(3) Function Buttons. Above the Fire Situation Window is an area reserved for touch-activated function buttons that would provide direct access to various functions and information. For example, building information, contact information, the site plan, and alarm list might be accessed by means of these buttons. Also, if any of the optional control functions described in F.6.3 are implemented, they would be accessed by means of touch-activated function buttons in this area of the display.
(4) Address Text Field. At the very top of the display is a text field in which the address is displayed for the subject building.
(5) Initial Alarm Text Field. Immediately above the Fire Situation Window is a text field in which the details of the initial alarm are displayed.

F.6.5 Interaction.

F.6.5.1 Point and Touch Interaction. There shall be no keyboard or mouse. All user interaction with the display shall be by means of other interaction methods such as touch screen interaction or function keys/buttons.

F.6.5.2 Minimal User Interaction. User interactions with the display shall be minimized as much as possible. There shall be no menus. The user shall be able to directly access all information and functions with a single touch control action.

F.6.5.3 Navigation.

F.6.5.3.1 Fire Situation Window Priority. The Fire Situation Window shall be displayed at all times. The incident commander shall have no control with which to close it.

F.6.5.3.2 Other Information. Menus shall *not* be used for accessing information or functions. The information and functions described in F.6.1 through F.6.3 shall be displayed in pop-up windows. These windows shall be placed on the screen in a way that minimally interferes with the view of the Fire Situation Window.

F.6.5.3.3 Closing Windows. An intuitive and obvious control for closing an information pop-up window shall be provided. The exception is the Fire Situation Window which shall have no close control.

Copyright National Fire Protection Association
Provided by IHS under license with NFPA
No reproduction or networking permitted without license from IHS
Not for Resale

F.6.5.3.4 Navigating Building Graphics—Vertical Navigation. An interactive control shall be required for the user to navigate, vertically, between floors of the building shown in the Fire Situation Window graphics. This control also shall allow the user to select the floor of interest for display.

F.6.5.3.5 Navigating Building Graphics—Horizontal Navigation. In the case of a building with a very large footprint, it may not be possible to graphically display an entire floor of the building at a sufficient level of resolution for fire command use. In these cases, a second interactive control shall be needed to navigate horizontally within a single floor to the area of interest so that the area of interest may be displayed at a sufficient level of resolution. This navigational control must be designed in a way that helps the incident commander remain well-oriented to the overall building layout while simultaneously showing details in one portion of the building.

F.6.5.3.6 Exiting the Display. The incident commander shall not be permitted to exit or otherwise turn off the Incident Commander Display.

Annex G Informational References

G.1 Referenced Publications. The documents or portions thereof listed in this annex are referenced within the informational sections of this Code and are not part of the requirements of this document unless also listed in Chapter 2 for other reasons.

G.1.1 NFPA Publications. National Fire Protection Association, 1 Batterymarch Park, Quincy, MA 02169-7471.

NFPA 10, *Standard for Portable Fire Extinguishers*, 2007 edition.

NFPA 11, *Standard for Low-, Medium-, and High-Expansion Foam*, 2005 edition.

NFPA 12, *Standard on Carbon Dioxide Extinguishing Systems*, 2005 edition.

NFPA 12A, *Standard on Halon 1301 Fire Extinguishing Systems*, 2004 edition.

NFPA 13, *Standard for the Installation of Sprinkler Systems*, 2007 edition.

NFPA 14, *Standard for the Installation of Standpipe and Hose Systems*, 2007 edition.

NFPA 15, *Standard for Water Spray Fixed Systems for Fire Protection*, 2007 edition.

NFPA 17, *Standard for Dry Chemical Extinguishing Systems*, 2002 edition.

NFPA 17A, *Standard for Wet Chemical Extinguishing Systems*, 2002 edition.

NFPA 25, *Standard for the Inspection, Testing, and Maintenance of Water-Based Fire Protection Systems*, 2002 edition.

NFPA 70, *National Electrical Code®*, 2005 edition.

NFPA 80, *Standard for Fire Doors and Other Opening Protectives*, 2007 edition.

NFPA 90A, *Standard for the Installation of Air-Conditioning and Ventilating Systems*, 2002 edition.

NFPA 90B, *Standard for the Installation of Warm Air Heating and Air-Conditioning Systems*, 2006 edition.

NFPA 92A, *Standard for Smoke-Control Systems Utilizing Barriers and Pressure Differences*, 2006 edition.

NFPA 92B, *Standard for Smoke Management Systems in Malls, Atria, and Large Spaces*, 2005 edition.

NFPA *101®*, *Life Safety Code®*, 2006 edition.

NFPA 170, *Standard for Fire Safety and Emergency Symbols*, 2006 edition.

NFPA 704, *Standard System for the Identification of the Hazards of Materials for Emergency Response*, 2007 edition.

NFPA 720, *Standard for the Installation of Carbon Monoxide (CO) Warning Equipment in Dwelling Units*, 2005 edition.

NFPA 1221, *Standard for the Installation, Maintenance, and Use of Emergency Services Communications Systems*, 2007 edition.

NFPA 5000®, *Building Construction and Safety Code®*, 2006 edition.

G.1.2 Other Publications.

G.1.2.1 ANSI Publications. American National Standards Institute, Inc., 25 West 43rd Street, 4th floor, New York, NY 10036.

ANSI/ASME A17.1, *Safety Code for Elevators and Escalators*, 2004, 2005 Addendum, and 2005 Supplement.

ANSI/ATA 878.1, *ARCNET Local Area Network*, 1999.

ANSI/EIA 709.1, *LonWorks Control Networking Standard.*

ANSI/FM 3260, *American National Standard for Energy-Sensing Fire Detectors for Automatic Fire Alarm Signaling*, 2004.

ANSI S3.2, *Method for Measuring the Intelligibility of Speech Over Communications Systems*, 1995.

ANSI S3.41, *American National Standard Audible Emergency Evacuation Signal*, 1996.

ANSI/UL 268, *Standard for Safety, Smoke Detectors for Fire Alarm Signaling Systems*, 1996, Revised October 2003.

ANSI/UL 464, *Audible Signaling Appliances*, 2003.

ANSI/UL 1638, *Visual Signaling Appliances — Private Mode Emergency and General Utility Signaling*, 2001, Revised November 2003.

ANSI/UL 1971, *Standard for Safety Signaling Devices for the Hearing Impaired*, 2002, Revised May 2004.

G.1.2.2 ASME Publication. American Society of Mechanical Engineers, Three Park Avenue, New York, NY 10016-5990.

ASME A17.4, *Guide for Emergency Personnel.*

G.1.2.3 ASHRAE Publication. American Society of Heating, Refrigerating and Air Conditioning Engineers, Inc., 1791 Tullie Circle, N.E., Atlanta, GA 30329-2305.

ASHRAE 135, BACnet, *A Data Communication Protocol for Building Automation and Control Networks.*

G.1.2.4 ICC Publications. International Code Council, 5203 Leesburg Pike, Suite 600, Falls Church, VA 22041.

ICC/ANSI A117.1, *Standard on Accessible and Useable Buildings and Facilities.*

IBC-ICC, *International Building Code.*

G.1.2.5 IEC Publications. International Electrotechnical Commission, 3 rue de Varembé, P.O. Box 131, CH-1211 Geneva 20, Switzerland. IEC documents are available through ANSI.

IEC 60849, *Sound systems for emergency purposes,* Second Edition: 1998.

IEC 60268, Part 16, *The objective rating of speech intelligibility by speech transmission index,* Second Edition: 1998.

G.1.2.6 IES Publication. Illuminating Engineering Society of North America, 120 Wall Street, 17th floor, New York, NY 10005.

Lighting Handbook Reference and Application, 1993.

Copyright National Fire Protection Association
Provided by IHS under license with NFPA
No reproduction or networking permitted without license from IHS
Not for Resale

G.1.2.7 IMSA Publication. International Municipal Signal Association, P.O. Box 539, 165 E. Union Street, Newark, NJ 14513.

"IMSA Official Wire and Cable Specifications," 1998.

G.1.2.8 ISO Publications. Standards Secretariat, Acoustical Society of America, 335 East 45th Street, New York, NY 10017-3483.

ISO/TR 4870, Accoustics — *The Construction and Calibration of Speech Intelligibility Tests*, 1991.

ISO 8201, *Audible Emergency Evacuation Signal*, 1990.

G.1.2.9 NTIA Publication. National Telecommunications and Information Administration (NTIA), Herbert C. Hoover Building, U.S. Department of Commerce/NTIA, 1401 Constitution Avenue, N.W., Washington, DC 20230.

Manual of Regulations and Procedures for Federal Radio Frequency Management.

G.1.2.10 SFPE Publications. Society of Fire Protection Engineers, 7315 Wisconsin Avenue, #620E, Bethesda, MD 20814.

SFPE Engineering Guide: Evaluation of the Computer Fire Model DETACT QS, 2002.

SFPE Engineering Guide to Human Behavior in Fire, 2003.

SFPE Engineering Guide to Performance Based Fire Protection Analysis and Design of Buildings, 2000.

SFPE Handbook of Fire Protection Engineering, 3rd Edition, 2002.

G.1.2.11 UL Publications. Underwriters Laboratories Inc., 333 Pfingston Road, Northbrook, IL 60062-2096.

UL 268, *Smoke Detectors for Fire Protective Signaling Systems.*

UL 521, *Heat Detectors for Fire Protective Signaling Systems.*

UL 864, *Control Units for Fire Protective Signaling Systems.*

G.1.2.12 U.S. Government Publications. U.S. Government Printing Office, Washington, DC 20402.

ADAAG, Americans with Disabilities Act Accessibility Guidelines, U.S. Department of Justice.

Title 29, Code of Federal Regulations, Part 1910.5.

Title 47, Code of Federal Regulations, Part 15.

G.2 Informational References. The documents or portions thereof listed in this annex are referenced within the informational sections of this Code and are not part of the requirements of this document unless also listed in Chapter 2 for other reasons.

G.2.1 Informational Publication Not Referenced in Code. ANSI/UL 2074, *Gas and Vapor Detectors and Sensors*, 2004.

G.2.2 References Associated with Annex A.

G.2.2.1 References to A.6.9.10.

1. Schifiliti, R.P., "To Leave or Not to Leave — That is the Question!", National Fire Protection Association, World Fire Safety Congress & Exposition, May 16, 2000, Denver, CO.

2. Ramachandran, G., "Informative Fire Warning Systems," *Fire Technology*, Volume 47, Number 1, February 1991, National Fire Protection Association, 66-81.

3. J. Bryan, "Psychological Variables That May Affect Fire Alarm Design," *Fire Protection Engineering*, Society of Fire Protection Engineers, Issue No. 11, Fall 2001.

4. Proulx, G., "Cool Under Fire," *Fire Protection Engineering*, Society of Fire Protection Engineers, Issue No. 16, Fall 2002.

5. General Services Administration, Proceedings of the Reconvened International Conference on Fire Safety in High Rise Buildings, Washington, D.C., October 1971.

6. Proulx, G., "Strategies for Ensuring Appropriate Occupant Response to Fire Alarm Signals," National Research Council of Canada, Ottawa, Ontario, *Construction Technology Update*, No. 43, 1–6, December 2000.

G.2.2.2 Reference to A.7.4.6.2.

http://www.aip.org/pt/nov99/locsound.html.

G.2.3 References Associated with Annex B.

1. Alpert, R. "Ceiling Jets," *Fire Technology*, Aug. 1972.

2. "Evaluating Unsprinklered Fire Hazards," *SFPE Technology Report* 83-2.

3. Babrauskas, V., Lawson, J. R., Walton, W. D., and Twilley, W. H. "Upholstered Furniture Heat Release Rates Measured with a Furniture Calorimeter," (NBSIR 82-2604) (Dec. 1982). National Institute of Standards and Technology (formerly National Bureau of Standards), Center for Fire Research, Gaithersburg, MD 20889.

4. Beyler, C. "A Design Method for Flaming Fire Detection," *Fire Technology*, Vol. 20, No. 4, Nov. 1984.

5. DiNenno, P., ed. Chapter 31, *SFPE Handbook of Fire Protection Engineering*, by R. Schifiliti, Sept. 1988.

6. Evans, D. D. and Stroup, D. W. "Methods to Calculate Response Time of Heat and Smoke Detectors Installed Below Large Unobstructed Ceilings," (NBSIR 85-3167) (Feb. 1985, issued Jul. 1986). National Institute of Standards and Technology (formerly National Bureau of Standards), Center for Fire Research, Gaithersburg, MD 20889.

7. Heskestad, G. "Characterization of Smoke Entry and Response for Products-of-Combustion Detectors" Proceedings, 7th International Conference on Problems of Automatic Fire Detection, Rheinish-Westfalischen Technischen Hochschule Aachen (Mar. 1975).

8. Heskestad, G. "Investigation of a New Sprinkler Sensitivity Approval Test: The Plunge Test," FMRC Tech. Report 22485, Factory Mutual Research Corporation, 1151 Providence Turnpike, Norwood, MA 02062.

9. Heskestad, G. and Delichatsios, M. A. "The Initial Convective Flow in Fire: Seventeenth Symposium on Combustion," The Combustion Institute, Pittsburgh, PA (1979).

10. Heskestad, G. and Delichatsios, M. A. "Environments of Fire Detectors — Phase 1: Effect of Fire Size, Ceiling Height and Material," Measurements Vol. I (NBS-GCR-77-86), Analysis Vol. II (NBS-GCR-77-95). National Technical Information Service (NTIS), Springfield, VA 22151.

11. Heskestad, G. and Delichatsios, M. A. "Update: The Initial Convective Flow in Fire," *Fire Safety Journal*, Vol. 15, No. 5, 1989.

12. International Organization for Standardization, *Audible Emergency Evacuation Signal*, ISO 8201, 1987.

13. Klote, J. and Milke, J. "Design of Smoke Management Systems," American Society of Heating, Refrigerating and Air Conditioning Engineers, Atlanta, GA, 1992.

Copyright National Fire Protection Association
Provided by IHS under license with NFPA
No reproduction or networking permitted without license from IHS
Not for Resale

14. Lawson, J. R., Walton, W. D., and Twilley, W. H. "Fire Performance of Furnishings as Measured in the NBS Furniture Calorimeter, Part 1," (NBSIR 83-2787) (Aug. 1983). National Institute of Standards and Technology (formerly National Bureau of Standards), Center for Fire Research, Gaithersburg, MD 20889.

15. Morton, B. R., Taylor, Sir Geoffrey, and Turner, J. S. "Turbulent Gravitational Convection from Maintained and Instantaneous Sources," Proc. Royal Society A, 234, 1–23, 1956.

16. Schifiliti, R. "Use of Fire Plume Theory in the Design and Analysis of Fire Detector and Sprinkler Response," Master's Thesis, Worcester Polytechnic Institute, Center for Firesafety Studies, Worcester, MA, 1986.

17. Title 47, Code of Federal Regulations, Communications Act of 1934 Amended.

18. Schifiliti, R. and Pucci, W. "Fire Detection Modelling, State of the Art," 6 May, 1996 sponsored by the Fire Detection Institute, Bloomfield, CT.

19. Forney, G., Bukowski, R., Davis, W. "Field Modelling: Effects of Flat Beamed Ceilings on Detector and Sprinkler Response," Technical Report, Year 1. International Fire Detection Research Project, National Fire Protection Research Foundation, Quincy, MA. October, 1993.

20. Davis, W., Forney, G., Bukowski, R. "Field Modelling: Simulating the Effect of Sloped Beamed Ceilings on Detector and Sprinkler Response," Year 1. International Fire Detection Research Project Technical Report, National Fire Protection Research Foundation, Quincy, MA. October, 1994.

21. Brozovski, E. "A Preliminary Approach to Siting Smoke Detectors Based on Design Fire Size and Detector Aerosol Entry Lag Time," Master's Thesis, Worcester Polytechnic, Worcester, MA, 1989.

22. Cote, A. *NFPA Fire Protection Handbook*, 17th Edition, National Fire Protection Association, Quincy, MA, 1992.

23. Tewarson, A., "Generation of Heat and Chemical Compounds in Fires," *SFPE Handbook of Fire Protection Engineering*, Second Edition, NFPA and SFPE, 1995.

24. Hollman, J. P. *Heat Transfer*, McGraw-Hill, New York, 1976.

25. Custer, R. L. P., and Meacham, B. "Introduction to Performance Based Fire Safety," SFPE, 1997.

26. Schifiliti, R. P., Meacham B., Custer, R. L. P. "Design of Detection Systems," *SFPE Handbook of Fire Protection Engineering*.

27. Marrion, C. "Correction Factors for the Heat of Combustion in NFPA 72," Appendix B, Fire Protection Engineering, SFPE, 1998.

28. Marrion, C. "Designing and Analyzing the Response of Detection Systems: An Update to Previous Correlations," 1988.

29. Custer, R. and Bright, R. "Fire Detection: The State-of-the-Art," NBS Tech. Note 839, National Bureau of Standards, Washington, 1974.

30. Meacham, Brian J. "Characterization of Smoke from Burning Materials for the Evaluation of Light Scattering-Type Smoke Detector Response," MS Thesis, WPI Center for Firesafety Studies, Worcester, MA, 1991.

31. Delichatsios, M. A. "Categorization of Cable Flammability, Detection of Smoldering, and Flaming Cable Fires," Interim Report, Factory Mutual Research Corporation, Norwood, MA, NP-1630, Nov. 1980.

32. Heskestad, G. FMRC Serial Number 21017, Factory Mutual Research Corp., Norwood, MA, 1974.

33. Marrion, C. E. "Lag Time Modeling and Effects of Ceiling Jet Velocity on the Placement of Optical Smoke Detectors," MS Thesis, WPI Center for Firesafety Studies, Worcester, MA, 1989.

34. Kokkala, M. et al. "Measurements of the Characteristic Lengths of Smoke Detectors," *Fire Technology*, Vol. 28, No. 2, National Fire Protection Association, Quincy, MA, 1992.

35. UL 268, *Standard for Safety, Smoke Detectors for Fire Protective Signaling Systems*, Underwriters Laboratories, Inc., Northbrook, IL, 1989.

36. Deal, Scott. "Technical Reference Guide for FPEtool Version 3.2," NISTIR 5486, National Institute for Standards and Technology, U.S. Department of Commerce, Gaithersburg, MD, Aug. 1994.

37. Mowrer, F. W. "Lag Times Associated with Detection and Suppression," *Fire Technology*, Vol. 26, No. 3, pp. 244–265, 1990.

38. Newman, J. S. "Principles for Fire Detection," *Fire Technology*, Vol. 24, No. 2, pp. 116–127, 1988.

39. Custer, R., Meacham, B., Wood, C. "Performance Based Design Techniques for Detection and Special Suppression Applications," Proceedings of the SFPE Engineering Seminars on Advances in Detection and Suppression Technology, 1994.

40. SFPE *Engineering Guide to Performance Based Fire Protection Analysis and Design.*

41. SFPE Handbook of Fire Protection Engineering, Third Edition. http://www.aip.org/pt/nov99/locsound.html

42. Drysdale, Dougal, *An Introduction to Fire Dynamics*, John Wiley & Sons, New York, NY, 1985, Second Edition.

43. Nam S., Donovan L.P. and Kim S.G.; Establishing Heat Detectors Thermal Sensitivity Through Bench Scale Tests; *Fire Safety Journal*, Volume 39, Number 3, 191–215; April 2004.

44. Nam S.; Thermal Response Coefficient TRC of Heat Detectors and Its Field Applications; Fire Detection and Research Applications Symposium; NFP Research Foundation; January 2003.

45. Nam S.; Performance-Based Heat Detector Spacing; Interflam 2004; pages 883–892 .

46. Geiman, J.A., "Evaluation of Smoke Detector Response Estimation Methods," Master of Science Thesis, University of Maryland, College Park, MD, December 2003.

47. Projected Beam Smoke Detectors - More Than Just a Substitute for Spot Detectors; Fire Protection Engineering; Summer 2004; SFPE

48. Geiman, J.A., and Gottuck, D.T., "Alarm Thresholds for Smoke Detector Modeling," *Fire Safety Science — Proceeding of the Seventh International Symposium*, 2003, pp. 197–208.

G.3 References for Extracts in Informational Sections.

NFPA *101®*, *Life Safety Code®*, 2006 edition.

NFPA 92B, *Standard for Smoke Management Systems in Malls, Atria, and Large Spaces*, 2005 edition.

NFPA 92B, *Standard for Smoke Management Systems in Malls, Atria, and Large Spaces,* 1995 edition.

Copyright National Fire Protection Association
Provided by IHS under license with NFPA
No reproduction or networking permitted without license from IHS
Not for Resale

Annex H Cross-Reference Table

H.1 This cross-reference table has been compiled to assist users familiar with the 2002 edition of the *National Fire Alarm Code®* to locate material in the 2007 edition. It is provided for information only and should not be relied upon as the only means of determining the disposition of requirements.

2002	2007
1.1	1.1
1.1.1	1.1.1
1.1.2	1.1.2
1.2	1.2
1.2.1	1.2.1
1.2.2	1.2.2
1.2.3	1.2.3
1.2.4	1.2.4
1.3	1.3
1.3.1	1.3.1
1.3.2	1.3.2
1.3.3	1.3.3
1.4	1.4
1.4.1	1.4.1
1.5	1.5
1.5.1	1.5.1
1.5.2	1.5.2
1.5.3	1.5.3
1.6	1.6
1.6	1.6.1
—	1.6.2 (new)
—	1.6.3 (new)
—	1.6.4 (new)
1.7	1.7
2.1	2.1
2.2	2.2
2.3	2.3
—	2.4 (new)
3.1	3.1
3.2	3.2
3.3	3.3
4.1	4.1
4.1.1	4.1.1
4.1.2	4.1.2
4.2	4.2
4.3	4.3
4.3.1	4.3.1
4.3.2	4.3.2
4.3.2.1	4.3.2.1
4.3.2.2	4.3.2.2
4.3.3	4.3.3
4.4	4.4
4.4.1	4.4.1
4.4.1.1	4.4.1.1
4.4.1.2	4.4.1.2
4.4.1.3	4.4.1.3
4.4.1.3.1	4.4.1.3.1
4.4.1.3.2	4.4.1.3.2
4.4.1.4	4.4.1.4
4.4.1.4.1	4.4.1.4.1
4.4.1.4.2	4.4.1.4.2
4.4.1.4.2.1	4.4.1.4.2.1
4.4.1.4.2.2	4.4.1.4.2.2
4.4.1.4.2.3	4.4.1.4.2.3
4.4.1.4.3	4.4.1.4.3
4.4.1.4.4	4.4.1.4.4
4.4.1.5	4.4.1.5
4.4.1.5.1	4.4.1.5.1
4.4.1.5.2	4.4.1.5.2
4.4.1.5.2.1	4.4.1.5.2.1
4.4.1.5.2.2	4.4.1.5.2.2
4.4.1.5.3	4.4.1.5.3
4.4.1.5.3.1	4.4.1.5.3.1
4.4.1.5.3.2	4.4.1.5.3.2
4.4.1.5.4	4.4.1.5.4
4.4.1.6	4.4.1.6
4.4.1.6.1	4.4.1.6.1
4.4.1.6.2	4.4.1.6.2
4.4.1.6.3	4.4.1.6.3
4.4.1.6.3(A)	4.4.1.6.3.1
4.4.1.6.3(B)	4.4.1.6.3.2
4.4.1.7	4.4.1.7
4.4.1.8	4.4.1.8
4.4.1.8.1	4.4.1.8.1
4.4.1.8.2	4.4.1.8.2
4.4.1.8.2.1	4.4.1.8.2.1
4.4.1.8.2.2	4.4.1.8.2.2
4.4.1.8.2.3	4.4.1.8.2.3
4.4.1.8.3	4.4.1.8.3
4.4.1.8.3.1	4.4.1.8.3.1
4.4.1.8.3.2	4.4.1.8.3.2
4.4.1.8.3.3	4.4.1.8.3.3
4.4.1.8.3.4	4.4.1.8.3.4
4.4.1.8.3.5	(deleted)
4.4.1.8.3.6	4.4.1.8.3.5
4.4.1.8.4	4.4.1.8.4
4.4.1.8.4.1	4.4.1.8.4.1
4.4.1.8.4.2	4.4.1.8.4.2
4.4.1.8.5	4.4.1.8.5
4.4.1.8.6	4.4.1.8.6
4.4.1.9	4.4.1.9
4.4.1.9.1	4.4.1.9.1
4.4.1.9.2	4.4.1.9.2
4.4.1.9.3	4.4.1.9.3
4.4.1.9.3.1	4.4.1.9.3.1
4.4.1.9.3.2	4.4.1.9.3.2
4.4.1.9.4	4.4.1.9.4
4.4.1.9.5	4.4.1.9.5
4.4.1.9.6	4.4.1.9.6
4.4.1.9.6.1	(deleted)
4.4.1.9.6.2	(deleted)
4.4.1.9.6.3	4.4.1.9.6
4.4.1.9.7	4.4.1.9.7
4.4.2	4.4.2
4.4.3	4.4.3
4.4.3.1	4.4.3.1
4.4.3.2	4.4.3.2
4.4.3.2.1	4.4.3.2.1
4.4.3.2.2	4.4.3.2.2
4.4.3.2.3	4.4.3.2.3
4.4.3.2.4	4.4.3.2.4
4.4.3.3	4.4.3.3
4.4.3.4	4.4.3.4
4.4.3.4.1	4.4.3.4.1
4.4.3.4.2	4.4.3.4.2
4.4.3.5	4.4.3.5
4.4.3.5.1	4.4.3.5.1
4.4.3.5.2	4.4.3.5.2
4.4.3.5.3	4.4.3.5.3
4.4.3.5.4	4.4.3.5.4
4.4.3.5.5	4.4.3.5.5
4.4.3.5.6	4.4.3.5.6
4.4.3.5.7	4.4.3.5.7
4.4.3.5.8	4.4.3.5.8
4.4.3.5.8.1	4.4.3.5.8.1
4.4.3.5.8.2	4.4.3.5.8.2
4.4.3.5.8.3	4.4.3.5.8.3
4.4.3.5.8.4	4.4.3.5.8.4
4.4.3.6	4.4.3.6
4.4.3.6.1	4.4.3.6.1
4.4.3.6.2	4.4.3.6.2
4.4.3.7	4.4.3.7
4.4.3.7	4.4.3.7.1
—	4.4.3.7.2 (new)
4.4.3.7(A)	4.4.3.7.3
4.4.3.7(B)	4.4.3.7.4
4.4.3.7(C)	4.4.3.7.5
4.4.3.7(D)	4.4.3.7.6
4.4.3.8	4.4.3.8
4.4.3.8(A)	4.4.3.8.1
4.4.3.8(B)	4.4.3.8.2
4.4.3.8(C)	4.4.3.8.3
4.4.4	4.4.4
4.4.4.1	4.4.4.1
4.4.4.2	4.4.4.2
4.4.4.2.1	4.4.4.2.1
4.4.4.2.2	4.4.4.2.2
4.4.4.2.3	4.4.4.2.3
4.4.4.2.4	4.4.4.2.4
4.4.4.3	4.4.4.3
4.4.4.4	4.4.4.4
4.4.4.5	4.4.4.5
4.4.4.6	4.4.4.6
4.4.4.6.1	4.4.4.6.1
4.4.4.6.2	4.4.4.6.2
4.4.5	4.4.5
4.4.6	4.4.6
4.4.6.1	4.4.6.1
—	4.4.6.2 (new)
4.4.6.1.1	4.4.6.3
4.4.6.1.2	4.4.6.4
4.4.6.1.3	4.4.6.4
4.4.6.2	4.4.6.5
—	4.4.6.6
4.4.6.3	4.4.6.6.1
4.4.6.4	4.4.6.6.2
4.4.7	4.4.7
4.4.7.1	4.4.7.1
4.4.7.1.1	4.4.7.1.1
4.4.7.1.2	4.4.7.1.2
4.4.7.1.3	4.4.7.1.3
4.4.7.1.4	4.4.7.1.4
4.4.7.1.5	4.4.7.1.5
4.4.7.1.6	4.4.7.1.6
4.4.7.1.7	4.4.7.1.7
4.4.7.1.8	4.4.7.1.8
4.4.7.1.9	4.4.7.1.9
4.4.7.1.10	4.4.7.1.10
4.4.7.1.11	4.4.7.1.11
4.4.7.1.12	4.4.7.1.12
4.4.7.1.13	4.4.7.1.13

Copyright National Fire Protection Association
Provided by IHS under license with NFPA
No reproduction or networking permitted without license from IHS
Not for Resale

2002	2007
4.4.7.1.14	4.4.7.1.14
4.4.7.1.15	4.4.7.1.15
4.4.7.1.16	4.4.7.1.16
4.4.7.1.17	4.4.7.1.17
4.4.7.1.17.1	(deleted)
4.4.7.1.17.2	(deleted)
4.4.7.1.17.3	(deleted)
4.4.7.2	4.4.7.2
4.4.7.2.1	4.4.7.2.1
4.4.7.2.1(A)	4.4.7.2.1.1
4.4.7.2.1(B)	4.4.7.2.1.2
4.4.7.2.1(C)	4.4.7.2.1.3
4.4.7.2.2	4.4.7.2.2
4.4.7.3	4.4.7.3
4.4.7.3.1	4.4.7.3.1
4.4.7.3.1.1	4.4.7.3.1.1
4.4.7.3.1.2	4.4.7.3.1.2
4.4.7.3.1.3	4.4.7.3.1.3
4.4.7.3.1.4	4.4.7.3.1.4
4.4.7.3.2	4.4.7.3.2
4.4.7.3.3	4.4.7.3.3
4.4.7.3.4	4.4.7.3.4
4.5	4.5
4.5.1	4.5.1
4.5.1.1	4.5.1.1
4.5.1.2	4.5.1.2
4.5.1.3	4.5.1.3
4.5.1.4	4.5.1.4
4.5.2	4.5.2
4.5.2.1	4.5.2.1
4.5.2.1(A)	4.5.2.1.1
4.5.2.1(B)	4.5.2.1.2
—	4.5.2.1.3 (new)
4.5.2.2	4.5.2.2
4.5.2.3	4.5.2.3
4.5.2.4	4.5.2.4
4.5.2.4.1	4.5.2.4.1
4.5.2.4.2	4.5.2.4.2
4.5.3	4.5.3
4.5.3.1	4.5.3.1
4.5.3.2	4.5.3.2
4.5.3.3	4.5.3.3
4.6	4.6
4.6.1	4.6.1
4.6.2	4.6.2
4.6.3	4.6.3
4.6.4	4.6.4
—	4.7 (new)
5.1	5.1
5.1.1	5.1.1
5.1.2	5.1.2
5.1.3	5.1.3
5.1.4	5.1.4
5.1.5	5.1.5
5.1.6	5.1.6
5.2	5.2
5.3	5.3
5.3.1	5.3.1
5.3.2	5.3.2
5.3.3	5.3.3
5.4	5.4
5.4.1	5.4.1
—	5.4.2 (new)
5.4.2	5.4.3
5.4.3	5.4.4
5.4.4	5.4.5
5.4.5	5.4.6
5.4.6	5.4.7
5.5	5.5
5.5.1	5.5.1
5.5.2	5.5.2
5.5.2.1	5.5.2.1
5.5.2.1.1	(deleted)
5.5.2.1.2	5.5.2.1.1
5.5.2.1.3	5.5.2.1.2
5.5.2.1.4	5.5.2.1.3
5.5.2.1.5	5.5.2.1.4
5.5.2.1.6	5.5.2.1.5
5.5.2.2	(deleted)
5.5.2.3	5.5.2.2
5.5.2.4	5.5.2.3
5.5.2.4.1	5.5.2.3.1
5.5.2.4.2	5.5.2.3.2
5.6	5.6 (title)
5.6.1	5.6.1
5.6.1.1	5.6.1.1
5.6.1.2	5.6.1.2
5.6.1.3	5.6.1.3
—	5.6.1.4
5.6.2	5.6.2
5.6.2.1	5.6.2.1
5.6.2.1.1	5.6.2.1.1
5.6.2.1.2	5.6.2.1.2
5.6.2.2	5.6.2.2
5.6.2.3	5.6.2.3
5.6.3	5.6.3
5.6.3.1	5.6.3.1
5.6.3.1.1	5.6.3.1.1
5.6.3.1.2	5.6.3.1.2
5.6.3.2	5.6.3.2
5.6.3.2.1	5.6.3.2.1
5.6.3.2.2	5.6.3.2.2
5.6.3.2.3	5.6.3.2.3
5.6.4	5.6.4
5.6.5	5.6.5
5.6.5.1	5.6.5.1
5.6.5.1.1	5.6.5.1.1
5.6.5.1.2	5.6.5.1.2
5.6.5.2	5.6.5.2
5.6.5.3	5.6.5.3
5.6.5.3.1	5.6.5.3.1
5.6.5.3.2	5.6.5.3.2
5.6.5.3.3	5.6.5.3.3
5.6.5.4	5.6.5.4
5.6.5.4.1	5.6.5.4.1
5.6.5.4.2	5.6.5.4.2
5.6.5.4.3	5.6.5.4.3
5.6.5.5	5.6.5.5
5.6.5.5.1	5.6.5.5.1
5.6.5.5.2	5.6.5.5.2
5.6.5.6	5.6.5.6
5.7	5.7
5.7.1	5.7.1
5.7.1.1	5.7.1.1
5.7.1.2	5.7.1.2
5.7.1.3	5.7.1.3
5.7.1.4	5.7.1.4
5.7.1.5	5.7.1.5
5.7.1.6	5.7.1.6
5.7.1.7	5.7.1.7
5.7.1.8	5.7.1.8
5.7.1.9	5.7.1.9
5.7.1.10	5.7.1.10
5.7.1.11	5.7.1.11
5.7.2	5.7.2
5.7.2.1	5.7.2.1
5.7.2.2	5.7.2.2
5.7.2.3	5.7.2.3
5.7.2.4	5.7.2.4
5.7.3	5.7.3
5.7.3.1	5.7.3.1
5.7.3.1.1	5.7.3.1.1
5.7.3.1.2	5.7.3.1.2
5.7.3.1.3	5.7.3.1.3
5.7.3.2	5.7.3.2
5.7.3.2.1	5.7.3.2.1
5.7.3.2.2	5.7.3.2.2
5.7.3.2.3	5.7.3.2.3
5.7.3.2.3(A)	5.7.3.2.3.1
5.7.3.2.3(B)	5.7.3.2.3.2
5.7.3.2.3(C)	5.7.3.2.3.3
5.7.3.2.3(D)	5.7.3.2.3.4
5.7.3.2.3(E)	5.7.3.2.3.5
5.7.3.2.4	5.7.3.2.4
5.7.3.2.4(A)	5.7.3.2.4.1
5.7.3.2.4(B)	5.7.3.2.4.2
5.7.3.2.4(C)	5.7.3.2.4.3
5.7.3.2.4(D)	5.7.3.2.4.4
5.7.3.2.4(E)	5.7.3.2.4.5
5.7.3.3	5.7.3.3
5.7.3.3.1	5.7.3.3.1
5.7.3.3.2	5.7.3.3.2
5.7.3.3.3	5.7.3.3.3
5.7.3.3.4	5.7.3.3.4
5.7.3.3.5	5.7.3.3.5
5.7.3.3.6	5.7.3.3.6
5.7.3.3.7	5.7.3.3.7
5.7.3.3.8	5.7.3.3.8
5.7.3.4	5.7.3.4
5.7.3.4.1	5.7.3.4.1
5.7.3.4.2	5.7.3.4.2
5.7.3.4.3	5.7.3.4.3
5.7.3.4.4	5.7.3.4.4
5.7.3.4.5	5.7.3.4.5
5.7.3.4.6	5.7.3.4.6
5.7.3.4.7	5.7.3.4.7
5.7.3.4.8	5.7.3.4.8
5.7.3.5	5.7.3.5
5.7.3.6	5.7.3.6
5.7.3.7	5.7.3.7
5.7.3.7.1	5.7.3.7.1
5.7.3.7.2	5.7.3.7.2
5.7.3.8	5.7.3.8
5.7.4	5.7.4
5.7.4.1	5.7.4.1
5.7.4.2	5.7.4.2
5.7.4.2.1	5.7.4.2.1
5.7.4.2.2	5.7.4.2.2
5.7.5	5.7.5
5.7.5.1	5.7.5.1
5.7.5.1.1	5.7.5.1.1
5.7.5.1.2	5.7.5.1.2
5.7.5.2	5.7.5.2
5.7.5.3	5.7.5.3
5.7.5.3.1	5.7.5.3.1
5.7.5.3.2	5.7.5.3.2
5.7.5.3.3	5.7.5.3.3
5.7.5.3.4	5.7.5.3.4
—	5.7.6 (new)
—	5.7.6.1 (new)

--`,,```,,,,````-`-`,,`,,`,`,,`---

Copyright National Fire Protection Association
Provided by IHS under license with NFPA
No reproduction or networking permitted without license from IHS

Not for Resale

2002	2007
—	5.7.6.2 (new)
—	5.7.6.2.1 (new)
—	5.7.6.2.2 (new)
—	5.7.6.3 (new)
—	5.7.6.4 (new)
5.8	5.8
—	5.8.1 (new)
—	5.8.1.1 (new)
5.8.1	5.8.1.2
5.8.2	5.8.2
5.8.2.1	5.8.2.1
5.8.2.2	5.8.2.2
5.8.3	5.8.3
5.8.3.1	5.8.3.1
5.8.3.1.1	5.8.3.1.1
5.8.3.1.2	5.8.3.1.2
5.8.3.2	5.8.3.2
5.8.3.2.1	5.8.3.2.1
5.8.3.2.2	5.8.3.2.2
5.8.3.2.3	5.8.3.2.3
5.8.3.2.4	5.8.3.2.4
5.8.3.2.5	5.8.3.2.5
5.8.3.2.6	5.8.3.2.6
5.8.3.3	5.8.3.3
5.8.3.3.1	5.8.3.3.1
5.8.3.3.2	5.8.3.3.2
5.8.3.3.4	5.8.3.3.4
5.8.3.3.5	5.8.3.3.5
5.8.3.3.6	5.8.3.3.6
5.8.4	5.8.4
5.8.4.1	5.8.4.1
5.8.4.2	5.8.4.2
5.8.4.3	5.8.4.3
5.8.4.4	5.8.4.4
—	5.8.5 (new)
—	5.8.5.1 (new)
—	5.8.5.2 (new)
—	5.8.5.3 (new)
—	5.8.5.4 (new)
—	5.9 (new)
—	5.9.1 (new)
—	5.9.2 (new)
—	5.9.2.1 (new)
—	5.9.2.2 (new)
—	5.9.3 (new)
—	5.9.3.1 (new)
—	5.9.3.2 (new)
—	5.9.4 (new)
—	5.9.4.1 (new)
—	5.9.4.2 (new)

2002	2007
5.9	5.10
5.9.1	5.10.1
5.9.2	5.10.2
5.9.3	5.10.3
5.9.4	5.10.4
5.9.5	5.10.5
5.9.5.1	5.10.5.1
5.9.5.2	5.10.5.2
5.9.5.3	5.10.5.3
5.10	5.11
5.10.1	5.11.1
5.10.2	5.11.2
5.10.3	5.11.3
5.11	5.12
5.12	5.13
5.12.1	5.13.1
5.12.2	5.13.2
5.12.3	5.13.3
5.12.4	5.13.4
5.12.5	5.13.5
5.12.6	5.13.6
5.12.7	5.13.7
5.12.8	5.13.8
—	5.14 (new)
5.13	5.15
5.13.1	5.15.1
5.13.1.1	5.15.1.1
5.13.1.2	5.15.1.2
5.13.1.3	5.15.1.3
5.13.1.4	5.15.1.4
5.13.2	5.15.2
5.13.2.1	5.15.2.1
5.13.2.2	5.15.2.2
5.13.3	5.15.3
5.13.3.1	5.15.3.1
5.13.3.2	5.15.3.2
5.13.3.3	5.15.3.3
5.13.4	5.15.4
5.13.5	5.15.5
5.14	5.16
5.14.1	5.16.1
5.14.2	5.16.2
5.14.2(A)	5.16.2.1
5.14.2(B)	6.16.2.2
5.14.3	5.16.3
5.14.3.1	5.16.3.1
5.14.3.2	5.16.3.2
5.14.3.3	5.16.3.3
5.14.3.4	5.16.3.4
5.14.4	5.16.4

2002	2007
5.14.4.1	5.16.4.1
5.14.4.2	5.16.4.2
5.14.4.2.1	5.16.4.2.1
5.14.4.2.2	5.16.4.2.2
5.14.4.2.2.1	5.16.4.2.2.1
5.14.4.2.2.2	5.16.4.2.2.2
5.14.5	5.16.5
5.14.5.1	5.16.5.1
5.14.5.2	5.16.5.2
5.14.5.3	5.16.5.3
5.14.5.4	5.16.5.4
5.14.5.5	5.16.5.5
5.14.5.6	5.16.5.6
5.14.5.7	5.16.5.7
5.14.5.8	5.16.5.8
5.14.5.9	5.16.5.9
5.14.6	5.16.6
5.14.6.1	5.16.6.1
5.14.6.2	5.16.6.2
5.14.6.3	5.16.6.3
5.14.6.4	5.16.6.4
5.14.6.5	5.16.6.5
5.14.6.5.1	5.16.6.5.1
5.14.6.5.1.1	5.16.6.5.1.1
5.14.6.5.1.2	5.16.6.5.1.2
5.14.6.5.1.3	5.16.6.5.1.3
5.14.6.5.1.4	5.16.6.5.1.4
5.14.6.5.2	5.16.6.5.2
5.14.6.5.3	5.16.6.5.3
5.14.6.5.3.1	5.16.6.5.3.1
5.14.6.5.3.2	5.16.6.5.3.2
5.14.6.5.3.3	5.16.6.5.3.3
5.14.6.5.4	5.16.6.5.4
5.14.6.6	5.16.6.6
5.14.6.6.1	5.16.6.6.1
5.14.6.6.2	5.16.6.6.2
—	5.17 (new)
6.1	6.1
6.1.1	6.1.1
6.1.2	6.1.2
6.1.3	6.1.3
6.1.4	6.1.4
6.2	6.2
6.2.1	6.2.1
6.2.2	6.2.2
6.2.2.1	6.2.2.1
6.2.2.2	6.2.2.2
6.2.2.3	6.2.2.3
6.2.3	6.2.3
6.2.3.1	6.2.3.1

2002	2007
6.2.3.2	6.2.3.2
—	6.3 (new)
—	6.3.1 (new)
—	6.3.2 (new)
—	6.3.3 (new)
6.3	6.3.3.1
—	6.3.3.2 (new)
—	6.3.3.2.1 (new)
—	6.3.3.2.2 (new)
6.4	6.4
6.4.1	6.4.1
6.4.2	6.4.2
6.4.2.1	6.4.2.1
6.4.2.1.1	6.4.2.1.1
6.4.2.1.2	6.4.2.1.2
6.4.2.2	6.4.2.2
6.4.2.2.1	6.4.2.2.1
6.4.2.2.2	6.4.2.2.2
—	6.4.2.2.3
6.4.3	6.4.3
6.4.3.1	6.4.3.1
6.4.3.2	6.4.3.2
6.4.3.3	6.4.3.3
6.5	6.5
6.6	6.6
6.6.1	6.6.1
6.6.2	6.6.2
6.7	6.7
6.8	6.8
6.8.1	6.8.1
6.8.1.1	6.8.1.1
6.8.1.2	6.8.1.2
6.8.1.3	6.8.1.3
6.8.1.3.1	6.8.1.3.1
6.8.1.3.1.1	6.8.1.3.1.1
6.8.1.3.1.2	6.8.1.3.1.2
6.8.1.3.2	6.8.1.3.2
6.8.1.3.3	6.8.1.3.3
6.8.1.3.4	6.8.1.3.4
6.8.2	6.8.2
6.8.2.1	6.8.2.1
6.8.2.2	6.8.2.2
6.8.2.3	6.8.2.3
6.8.2.4	6.8.2.4
6.8.2.4.1	6.8.2.4.1
6.8.2.4.2	6.8.2.4.2
6.8.2.5	6.8.2.5
6.8.2.6	6.8.2.6
6.8.2.7	6.8.2.7
6.8.2.8	6.8.2.8

--`,,```,,,,````-`-`,,`,,`,`,,`---
Copyright National Fire Protection Association
Provided by IHS under license with NFPA
No reproduction or networking permitted without license from IHS
Not for Resale

2002	2007
6.8.3	6.8.3
6.8.3.1	6.8.3.1
6.8.3.2	6.8.3.2
6.8.3.3	6.8.3.3
6.8.3.4	6.8.3.4
6.8.3.5	6.8.3.5
6.8.4	6.8.4
6.8.4.1	6.8.4.1
6.8.4.2	6.8.4.2 (new)
6.8.4.3	6.8.4.3
6.8.4.4	6.8.4.4
6.8.4.5	6.8.4.5
—	6.8.4.6 (new)
6.8.4.6	6.8.4.7
6.8.4.7	6.8.4.8
—	6.8.4.10 (new)
—	6.8.4.11 (new)
6.8.5	6.8.5
6.8.5.1	6.8.5.1
6.8.5.1.1	6.8.5.1.1
6.8.5.1.2	6.8.5.1.2
6.8.5.2	6.8.5.2
6.8.5.2.1	6.8.5.2.1
6.8.5.2.2	6.8.5.2.2
—	6.8.5.3 (title)
6.8.5.3	6.8.5.3.1
—	6.8.5.3.2 (new)
6.8.5.4	6.8.5.4
6.8.5.4.1	6.8.5.4.1
6.8.5.4.2	6.8.5.4.2
6.8.5.4.3	6.8.5.4.3
6.8.5.4.4	6.8.5.4.4
6.8.5.4.5	6.8.5.4.5
6.8.5.5	6.8.5.5
6.8.5.5.1	6.8.5.5.1 (new)
6.8.5.5.2	6.8.5.5.2
6.8.5.6	6.8.5.7
6.8.5.6.1	6.8.5.7.1 (new)
6.8.5.6.2	6.8.5.7.2
6.8.5.7	6.8.5.6
6.8.5.7	6.8.5.8
6.8.5.7.1	6.8.5.8.1
—	6.8.5.6.1 (new)
6.8.5.7.2	6.8.5.6.2
6.8.5.7.3	(deleted)
6.8.5.7.4	(deleted)
6.8.5.7.5	6.8.5.8.2
6.8.5.8	6.8.5.9
—	6.8.5.9.1 (new)
—	6.8.5.9.2 (new)

2002	2007
6.8.5.8.1	(deleted)
6.8.5.8.2	(deleted)
6.8.5.8.3	(deleted)
6.8.5.9	6.8.5.10
6.8.5.9.1	(deleted)
—	6.8.5.10.1 (new)
—	6.8.5.10.2 (new)
—	6.8.5.10.3 (new)
6.8.5.9.2	6.8.5.10.4
—	6.8.5.10.5 (new)
6.8.5.10	6.8.5.11
6.8.5.10.1	6.8.5.11.1
6.8.5.10.2	6.8.5.11.2
6.8.6	6.8.6
6.8.6.1	6.8.6.1
—	6.8.6.2 (new)
—	6.8.6.2.1 (new)
—	6.8.6.2.2 (new)
—	6.8.6.2.3 (new)
—	6.8.6.2.4 (new)
6.8.6.2	6.8.6.3
6.8.6.2.1	6.8.6.3.1
6.8.6.2.2	6.8.6.3.2
6.8.6.3	6.8.6.4
6.8.6.3.1	6.8.6.4.1
6.8.6.3.2	6.8.6.4.2
6.8.6.3.3	6.8.6.4.3
6.8.6.4	6.8.6.5
6.8.6.4.1	6.8.6.5.1
6.8.6.4.2	6.8.6.5.2
6.8.6.4.3	6.8.6.5.3
6.9	6.9
6.9.1	6.9.1
6.9.2	6.9.10
6.9.3	(deleted)
—	6.9.3 (new)
6.9.4	6.9.10.4
6.9.4.1	6.9.10
6.9.4.1	6.9.10.4
6.9.4.2	6.9.10.4.1
6.9.4.3	6.9.10.4.2
6.9.4.4	6.9.8
6.9.4.5	6.9.9
6.9.4.6	6.9.10.4.3
—	6.9.10.4.4 (new)
6.9.5	6.9.5

2002	2007
6.9.5.1	6.9.2
6.9.5.1	6.9.10.1
—	6.9.2.1 (new)
6.9.5.2	6.9.2.2
6.9.5.3	(deleted)
6.9.5.3(1)	6.9.3.1
6.9.5.3(1)	6.9.3.2
6.9.5.3(2)	6.9.10.2
6.9.5.3(3)	(deleted)
6.9.5.3 Ex 2	6.9.4
6.9.5.4	(deleted)
6.9.5.5	6.9.6.7
6.9.5.5	6.8.4.9
6.9.5.6	(deleted)
6.9.5.7	6.9.6.6
6.9.5.8	6.9.5
6.9.6	6.9.6
6.9.6.1	6.9.6.1
6.9.6.2	(deleted)
6.9.6.3	(deleted)
6.9.6.4	6.9.6.3
6.9.6.5	6.9.6.2
—	6.9.6.4 (new)
6.9.6.6	6.9.6.5
6.9.7	6.9.7
6.9.7.1	6.9.7
6.9.7.2	(deleted)
6.9.7.3	6.9.10.3
6.9.8	6.9.11
6.9.8.1	6.9.11.1
6.9.8.2	6.9.11.2
—	6.10 (new)
6.9.9	6.10.1
6.9.9.1	6.10.1.1
6.9.9.2	6.10.1.2
—	6.10.1.3 (new)
6.9.9.3	6.10.1.4
6.9.9.4	6.10.1.5
6.9.9.5	6.10.1.6
6.9.9.6	6.10.1.7
6.9.9.7	6.10.1.8
6.9.9.8	6.10.1.9
6.9.9.9	6.10.1.10
6.9.9.10	6.10.1.11
6.9.9.11	6.10.1.12
6.9.9.12	6.10.1.13
6.9.9.13	6.10.1.14
6.9.9.14	6.10.1.15
—	6.10.1.16 (new)
—	6.10.2 (new)

2002	2007
—	6.10.2.1 (new)
—	6.10.2.2 (new)
6.10	6.11
6.10.1	6.11.1
6.10.2	6.11.2
6.11	6.12
6.11.1	6.12.1
—	6.12.2 (new)
6.11.2	6.12.3
6.11.3	6.12.4
6.11.4	6.12.5
6.11.4	6.12.5.1
—	6.12.5.2 (new)
6.11.5	6.12.6
6.11.6	6.12.7
6.11.7	6.12.8
6.11.8	6.12.9
6.12	6.13
6.12.1	6.13.1
6.12.2	6.13.2
6.12.3	6.13.3
6.13	6.14
6.13.1	6.14.1
6.13.2	6.14.2
6.13.3	6.14.3
6.13.4	6.14.4
6.13.5	6.14.5
6.14	6.15
6.14.1	6.15.1
6.14.2	6.15.2
6.14.3	6.15.3
6.14.4	6.15.4
6.14.5	6.15.5
6.14.6	6.15.6
6.15	6.16
6.15.1	6.16.1
6.15.2	6.16.2
6.15.2.1	6.16.2.1
6.15.2.2	6.16.2.2
6.15.2.3	6.16.2.3
6.15.2.4	6.16.2.4
6.15.2.5	6.16.2.5
6.15.2.6	6.16.2.6
6.15.2.7	6.16.2.7
6.15.2.8	6.16.2.8
6.15.3	6.16.3
6.15.3.1	6.16.3.1
6.15.3.2	6.16.3.2
6.15.3.3	6.16.3.3
6.15.3.4	6.16.3.4

Copyright National Fire Protection Association
Provided by IHS under license with NFPA
No reproduction or networking permitted without license from IHS
Not for Resale

2002	2007
6.15.3.5	6.16.3.5
6.15.3.6	6.16.3.6
6.15.3.7	6.16.3.7
6.15.3.8	6.16.3.8
6.15.3.9	6.16.3.9
6.15.3.9	6.16.3.10
—	6.16.3.11 (new)
6.15.3.10	6.16.3.12
—	6.16.3.12.1 (new)
—	6.16.3.12.2 (new)
—	6.16.3.12.3 (new)
—	6.16.3.12.4 (new)
6.15.4	6.16.4
6.15.4.1	6.16.4.1
6.15.4.2	6.16.4.2
6.15.4.3	6.16.4.3
6.15.4.4	6.16.4.4
6.15.4.5	6.16.4.5
—	6.16.4.6 (new)
6.15.5	6.16.5
6.15.5.1	6.16.5.1
6.15.5.2	6.16.5.2
6.15.5.3	6.16.5.3
6.15.5.4	6.16.5.4
6.15.5.5	6.16.5.5
6.15.5.6	6.16.5.6
6.15.6	6.16.6
6.15.6.1	6.16.6.1
6.15.6.2	6.16.6.2
6.15.6.3	6.16.6.3
6.15.6.4	6.16.6.4
6.15.7	6.16.7
6.15.7.1	6.16.7.1
6.15.7.2	6.16.7.2
6.15.7.3	6.16.7.3
—	6.16.7.4 (new)
6.15.7.4	6.16.7.5
—	6.16.7.6 (new)
—	6.16.8 (new)
—	6.16.8.1 (new)
—	6.16.8.2 (new)
6.16	6.17
6.16.1	6.17.1
6.16.2	6.17.2
6.16.3	6.17.3
6.16.3.1	6.17.3.1
6.16.3.2	6.17.3.2
6.16.3.3	6.17.3.3
6.16.3.4	6.17.3.4
6.16.3.5	6.17.3.5
6.16.4	6.17.4
6.16.4.1	6.17.4.1
6.16.4.2	6.17.4.2
6.16.4.3	6.17.4.3
6.16.4.4	6.17.4.4
6-16.4.5	6-17.4.5
6.16.4.6	6.17.4.6
6.16.5	6.17.5
—	6.18 (new)
7.1	7.1
7.1.1	7.1.1
7.1.2	7.1.2
7.1.3	7.1.3
7.1.4	7.1.4
7.1.5	7.1.5
7.1.6	7.1.6
—	7.1.7 (new)
7.2	7.2
7.3	7.3
7.3.1	7.3.1
7.3.2	7.3.2
7.3.2.1	7.3.2.1
7.3.2.2	7.3.2.2
7.3.2.3	7.3.2.3
7.3.3	7.3.3
7.3.3	7.3.3.1
—	7.3.3.2 (new)
7.3.4	7.3.4
7.3.4.1	7.3.4.1
7.3.4.2	7.3.4.2
7.3.4.3	7.3.4.3
7.3.5	7.3.5
7.3.5.1	7.3.5.1
7.3.5.2	7.3.5.2
7.3.6	7.3.6
7.4	7.4
7.4.1	7.4.1
7.4.1.1	7.4.1.1
7.4.1.2	7.4.1.2
7.4.1.3	7.4.1.3
7.4.1.4	7.4.1.4
—	7.4.1.5 (new)
—	7.4.1.6 (new)
—	7.4.1.7 (new)
7.4.2	7.4.2
7.4.2.1	7.4.2.1
7.4.2.2	7.4.2.2
7.4.2.3	7.4.2.3
7.4.2.4	7.4.2.4
7.4.2.5	7.4.2.5
7.4.2.5.1	7.4.2.5.1
7.4.2.5.2	7.4.2.5.2
7.4.2.5.3	7.4.2.5.3
7.4.3	7.4.3
7.4.3.1	(deleted)
7.4.3.2	7.4.3.1
7.4.3.3	7.4.3.2
7.4.3.4	7.4.3.3
7.4.3.4.1	7.4.3.3.1
7.4.3.4.2	7.4.3.3.2
7.4.3.4.3	7.4.3.3.3
7.4.4	7.4.4
7.4.4.1	7.4.4.1
7.4.4.2	7.4.4.2
7.4.5	7.4.5
7.4.5.1	7.4.5.1
7.4.5.2	7.4.5.2
7.4.5.3	7.4.5.3
7.4.5.4	7.4.5.4
7.4.5.5	7.4.5.5
7.4.5.5.1	7.4.5.5.1
7.4.5.5.2	7.4.5.5.2
—	7.4.6 (new)
—	7.4.6.1 (new)
—	7.4.6.2 (new)
—	7.4.6.3 (new)
—	7.4.6.4 (new)
—	7.4.6.5 (new)
7.4.6	7.4.7
7.4.6.1	7.4.7.1
7.4.6.2	7.4.7.2
7.4.6.3	7.4.7.3
7.4.6.4	7.4.7.4
7.4.6.5	7.4.7.5
—	7.4.8 (new)
7.5	7.5
7.5.1	7.5.1
7.5.2	7.5.2
7.5.2.1	7.5.2.1
7.5.2.2	7.5.2.2
7.5.2.3	7.5.2.3
7.5.2.4	7.5.2.4
—	7.5.2.5 (new)
—	7.5.2.6 (new)
7.5.3	7.5.3
7.5.4	7.5.4
—	7.5.4.1 (new)
—	7.5.4.2 (new)
7.5.4.1	7.5.4.3
7.5.4.1.1	7.5.4.3.1
7.5.4.1.2	7.5.4.3.2
7.5.4.1.3	7.5.4.3.3
7.5.4.1.4	7.5.4.3.4
7.5.4.1.5	7.5.4.3.5
7.5.4.1.6	7.5.4.3.6
7.5.4.1.7	7.5.4.3.7
7.5.4.2	7.5.4.4
7.5.4.2.1	7.5.4.4.2
7.5.4.2.2	7.5.4.4.3
7.5.4.2.3	7.5.4.4.4
7.5.4.2.4	7.5.4.4.1
7.5.4.2.5	7.5.4.4.5
7.5.4.2.6	7.5.4.4.6
7.5.4.2.7	7.5.4.4.7
7.5.4.2.8	7.5.4.4.8
7.5.4.3	7.5.4.5
7.5.4.3.1	7.5.4.5.1
7.5.4.3.2	7.5.4.5.2
7.5.4.4	7.5.4.6
7.5.4.4.1	7.5.4.6.1
7.5.4.4.2	7.5.4.6.2
7.5.4.4.3	7.5.4.6.3
—	7.5.5 (new)
7.6	7.6
7.7	7.7
7.7.1	7.7.1
7.7.2	7.7.2
7.8	7.8
7.8.1	7.8.1
7.8.1.1	7.8.1.1
7.8.1.2	7.8.1.2
7.8.2	7.8.2
7.8.2.1	7.8.2.1
7.8.2.2	7.8.2.2
7.8.2.3	7.8.2.3
7.9	7.9
7.9.1	7.9.1
7.9.2	7.9.2
7.9.3	7.9.3
7.9.3.1	7.9.3.1
7.9.3.2	7.9.3.2
—	7.10 (new)
—	7.10.1 (new)
—	7.10.2 (new)
7.10	7.11
—	7.12 (new)
8.1	8.1

Copyright National Fire Protection Association
Provided by IHS under license with NFPA
No reproduction or networking permitted without license from IHS
Not for Resale

2002	2007
—	8.1.1 (new)
8.1.1	8.1.2
8.1.2	8.1.3
—	8.2 (new)
—	8.2.1 (new)
—	8.2.2 (new)
—	8.2.3 (new)
—	8.2.3.1 (new)
—	8.2.3.2 (new)
—	8.2.3.3 (new)
8.2	8.3
8.2.1	8.3.1
8.2.2	8.3.2
8.2.3	8.3.3
8.2.4	8.3.4
8.2.4.1	8.3.4.1
8.2.4.1.1	8.3.4
8.2.4.1.2	8.3.4.3
8.2.4.1.3	8.3.4.4
8.2.4.2	8.3.4.1
8.2.4.2.1	8.3.4
8.2.4.2.2	(deleted)
—	8.3.4.2 (new)
8.2.4.2.3	8.3.4.3
8.2.4.3	8.3.4.5
8.2.4.4	8.3.4.6
—	8.3.4.7 (new)
—	8.3.4.8 (new)
8.2.5	8.3.5
8.2.5.1	8.3.5.1
8.2.5.2	8.3.5.2
8.2.5.2.1	8.3.5.2.1
8.2.5.2.2	8.3.5.2.2
8.2.5.2.3	8.3.5.2.3
8.2.5.2.4	8.3.5.2.4
8.2.5.2.5	8.3.5.2.5
8.2.5.2.6	8.3.5.2.6
8.2.5.2.7	8.3.5.2.7
8.2.5.2.8	8.3.5.2.8
8.2.5.2.8(A)	8.3.5.2.8.1
8.2.5.2.8(B)	8.3.5.2.8.2
8.2.6	8.3.6
8.2.6.1	8.3.6.1
8.2.6.1.1	8.3.6.1.1
8.2.6.1.2	8.3.6.1.2
8.2.6.1.3	8.3.6.1.3
8.2.6.1.4	8.3.6.1.4
8.2.6.1.5	8.3.6.1.5
8.2.6.1.6	8.3.6.1.6
8.2.6.1.6(A)	8.3.6.1.6.1
8.2.6.1.6(B)	8.3.6.1.6.2
8.2.6.1.6(C)	8.3.6.1.6.3
8.2.6.1.6(D)	8.3.6.1.6.4
8.2.6.2	8.3.6.2
8.2.6.2.1	8.3.6.2.1
8.2.6.2.2	8.3.6.2.2
8.2.7	8.3.7
8.2.7.1	8.3.7.1
8.2.7.1.1	8.3.7.1.1
8.2.7.1.2	8.3.7.1.2
8.2.7.2	8.3.7.2
8.2.7.2.1	8.3.7.2.1
8.2.7.2.2	8.3.7.2.2
8.2.7.3	8.3.7.3
8.2.7.4	8.3.7.4
8.2.7.5	8.3.7.5
8.2.7.5.1	8.3.7.5.1
8.2.7.5.2	8.3.7.5.2
8.2.7.5.3	8.3.7.5.3
8.2.7.5.4	8.3.7.5.4
8.2.7.5.5	8.3.7.5.5
8.2.7.5.6	8.3.7.5.6
8.2.8	8.3.8
8.2.8.1	8.3.8.1
8.2.8.2	8.3.8.2
8.2.8.3	8.3.8.3
8.2.9	8.3.9
8.3	8.4
8.3.1	8.4.1
8.3.2	8.4.2
8.3.2.1	8.4.2.1
8.3.2.2	8.4.2.2
8.3.2.3	8.4.2.3
8.3.2.4	8.4.2.4
8.3.3	8.4.3
8.3.3.1	8.4.3.1
8.3.3.2	8.4.3.2
8.3.3.3	8.4.3.3
8.3.3.4	8.4.3.4
8.3.3.4.1	8.4.3.4.1
8.3.3.4.2	8.4.3.4.2
8.3.3.4.3	8.4.3.4.3
8.3.3.5	8.4.3.5
8.3.4	8.4.4
8.3.4.1	8.4.4.1
8.3.4.1.1	8.4.4.1.1
8.3.4.1.2	8.4.4.1.2
8.3.4.1.3	8.4.4.1.3
8.3.4.1.4	8.4.4.1.4
8.3.4.2	8.4.4.2
8.3.4.2.1	8.4.4.2.1
8.3.4.2.1(A)	8.4.4.2.1.1
8.3.4.2.1(B)	8.4.4.2.1.2
8.3.4.2.1(C)	8.4.4.2.1.3
8.3.4.2.1(D)	8.4.4.2.1.4
8.3.4.2.2	8.4.4.2.2
8.3.4.2.2.1	8.4.4.2.2.1
8.3.4.2.2.2	8.4.4.2.2.2
8.3.4.2.2.3	8.4.4.2.2.3
8.3.4.2.2.4	8.4.4.2.2.4
8.3.4.3	8.4.4.3
8.3.4.3(A)	8.4.4.3.1
8.3.4.3(B)	8.4.4.3.2
8.3.4.4	8.4.4.4
8.3.4.5	8.4.4.5
8.3.4.5.1	8.4.4.5.1
8.3.4.5.2	8.4.4.5.2
8.3.4.6	8.4.4.6
8.3.4.6.1	8.4.4.6.1
8.3.4.6.2	8.4.4.6.2
8.3.4.6.3	8.4.4.6.3
8.3.4.6.4	8.4.4.6.4
8.3.5	8.4.5
8.3.5.1	8.4.5.1
8.3.5.1.1	8.4.5.1.1
8.3.5.1.2	8.4.5.1.2
8.3.5.2	8.4.5.2
8.3.5.2.1	8.4.5.2.1
8.3.5.2.2	8.4.5.2.2
8.3.5.3	8.4.5.3
8.3.5.4	8.4.5.4
8.3.5.5	8.4.5.5
8.3.5.6	8.4.5.6
8.3.5.6.1	8.4.5.6.1
8.3.5.6.2	8.4.5.6.2
8.3.5.6.3	8.4.5.6.3
8.3.5.6.4	8.4.5.6.4
8.3.6	8.4.6
8.3.6.1	8.4.6.1
8.3.6.2	8.4.6.2
8.3.6.3	8.4.6.3
8.3.7	8.4.7
8.4	8.5
8.4.1	8.5.1
8.4.1.1	8.5.1.1
8.4.1.2	8.5.1.2
8.4.1.3	8.5.1.3
8.4.1.4	8.5.1.4
8.4.1.5	8.5.1.5
8.4.1.6	8.5.1.6
8.4.2	8.5.2
8.4.2.1	8.5.2.1
8.4.2.1.1	8.5.2.1.1
8.4.2.1.2	8.5.2.1.2
8.4.2.2	8.5.2.2
8.4.2.3	8.5.2.3
8.4.3	8.5.3
8.4.3.1	8.5.3.1
8.4.3.1.1	8.5.3.1.1
8.4.3.1.2	8.5.3.1.2
8.4.3.1.3	8.5.3.1.3
8.4.3.1.4	8.5.3.1.4
8.4.3.1.5	8.5.3.1.5
8.4.3.2	8.5.3.2
8.4.3.3	8.5.3.3
8.4.3.4	8.5.3.4
8.4.3.5	8.5.3.5
8.4.3.5.1	8.5.3.5.1
8.4.3.5.2	8.5.3.5.2
8.4.4	8.5.4
8.4.4.1	8.5.4.1
8.4.4.2	8.5.4.2
8.4.4.3	8.5.4.3
8.4.5	8.5.5
8.4.5.1	8.5.5.1
8.4.5.2	8.5.5.2
8.4.5.3	8.5.5.3
8.4.6	8.5.6
8.5	8.6
8.5.1	8.6.1
8.5.2	8.6.2
8.5.2.1	8.6.2.1
8.5.2.2	8.6.2.2
8.5.2.3	8.6.2.3
8.5.2.4	8.6.2.4
8.5.2.4.1	8.6.2.4.1
8.5.2.4.2	8.6.2.4.2
8.5.2.4.3	8.6.2.4.3
8.5.2.5	8.6.2.5
8.5.2.5.1	8.6.2.5.1
8.5.2.5.2	8.6.2.5.2
8.5.2.5.2(A)	8.6.2.5.2.1
8.5.2.5.2(B)	8.6.2.5.2.2
8.5.2.5.2(C)	8.6.2.5.2.3
8.5.2.5.3	8.6.2.5.3
8.5.2.6	8.6.2.6
8.5.2.6.1	8.6.2.6.1
8.5.2.6.1(A)	8.6.2.6.1.1
8.5.2.6.1(B)	8.6.2.6.1.2
8.5.2.6.2	8.6.2.6.2

Copyright National Fire Protection Association
Provided by IHS under license with NFPA
No reproduction or networking permitted without license from IHS
Not for Resale

2002	2007
8.5.3	8.6.3
8.5.3.1	8.6.3.1
8.5.3.1.1	8.6.3.1.1
8.5.3.1.1(A)	8.6.3.1.1.1
8.5.3.1.1(B)	8.6.3.1.1.2
8.5.3.1.2	8.6.3.1.2
8.5.3.1.2(A)	8.6.3.1.2.1
8.5.3.1.2(B)	8.6.3.1.2.2
8.5.3.1.3	8.6.3.1.3
8.5.3.1.4	8.6.3.1.4
8.5.3.1.5	8.6.3.1.5
8.5.3.1.6	8.6.3.1.6
8.5.3.1.6.1	8.6.3.1.6.1
8.5.3.1.6.2	8.6.3.1.6.2
8.5.3.1.6.3	8.6.3.1.6.3
8.5.3.1.7	8.6.3.1.7
8.5.3.1.8	8.6.3.1.8
8.5.3.2	8.6.3.2
8.5.3.2.1	8.6.3.2.1
8.5.3.2.1.1	8.6.3.2.1.1
8.5.3.2.1.2	8.6.3.2.1.2
8.5.3.2.1.3	8.6.3.2.1.3
8.5.3.2.1.4	8.6.3.2.1.4
8.5.3.2.1.5	8.6.3.2.1.5
8.5.3.2.2	8.6.3.2.2
8.5.3.2.2.1	8.6.3.2.2.1
8.5.3.2.2.2	8.6.3.2.2.2
8.5.3.2.3	8.6.3.2.3
8.5.3.2.3.1	8.6.3.2.3.1
8.5.3.2.3.2	8.6.3.2.3.2
8.5.3.2.3.3	8.6.3.2.3.3
8.5.3.3	8.6.3.3
8.5.3.3.1	8.6.3.3.1
8.5.3.3.1(A)	8.6.3.3.1.1
8.5.3.3.1(B)	8.6.3.3.1.2
8.5.3.3.1(C)	8.6.3.3.1.3
8.5.3.3.1(D)	8.6.3.3.1.4
8.5.3.3.2	8.6.3.3.2
8.5.3.3.2(A)	8.6.3.3.2.1
8.5.3.3.2(B)	8.6.3.3.2.2
8.5.3.3.2(C)	8.6.3.3.2.3
8.5.3.3.2(D)	8.6.3.3.2.4
8.5.3.3.2(E)	8.6.3.3.2.5
8.5.3.3.2(F)	8.6.3.3.2.6
8.5.3.3.2(G)	8.6.3.3.2.7
8.5.3.3.2(H)	8.6.3.3.2.8
8.5.3.3.3	8.6.3.3.3
8.5.3.3.3.1	8.6.3.3.3.1
8.5.3.3.3.2	8.6.3.3.3.2
8.5.3.3.3.3	8.6.3.3.3.3
8.5.3.3.3.4	8.6.3.3.3.4
8.5.3.3.3.5	8.6.3.3.3.5
8.5.3.3.3.6	8.6.3.3.3.6
8.5.3.3.3.7	8.6.3.3.3.7
8.5.3.3.3.8	8.6.3.3.3.8
8.5.3.3.3.9	8.6.3.3.3.9
8.5.3.3.3.10	8.6.3.3.3.10
8.5.3.3.4	8.6.3.3.4
8.5.3.4	8.6.3.4
8.5.3.4.1	8.6.3.4.1
8.5.3.4.2	8.6.3.4.2
8.5.3.4.3	8.6.3.4.3
8.5.3.4.3.1	8.6.3.4.3.1
8.5.3.4.3.2	8.6.3.4.3.2
8.5.3.4.4	8.6.3.4.4
8.5.3.4.4.1	8.6.3.4.4.1
8.5.3.4.4.2	8.6.3.4.4.2
8.5.3.4.5	8.6.3.4.5
8.5.3.4.5(A)	8.6.3.4.5.1
8.5.3.4.5(B)	8.6.3.4.5.2
8.5.3.4.5(C)	8.6.3.4.5.3
8.5.3.5	8.6.3.5
8.5.3.5.1	8.6.3.5.1
8.5.3.5.2	8.6.3.5.2
8.5.3.5.3	8.6.3.5.3
8.5.3.5.3(A)	8.6.3.5.3.1
8.5.3.5.3(B)	8.6.3.5.3.2
8.5.3.5.3(C)	8.6.3.5.3.3
8.5.3.5.4	8.6.3.5.4
8.5.3.5.4.1	8.6.3.5.4.1
8.5.3.5.4.2	8.6.3.5.4.2
8.5.3.5.4.3	8.6.3.5.4.3
8.5.3.5.4.4	8.6.3.5.4.4
8.5.3.5.4.5	8.6.3.5.4.5
8.5.3.5.4.6	8.6.3.5.4.6
8.5.3.5.5	8.6.3.5.5
8.5.3.5.6	8.6.3.5.6
8.5.3.5.6(A)	8.6.3.5.6.1
8.5.3.5.6(B)	8.6.3.5.6.2
8.5.3.6	8.6.3.6
8.5.3.6.1	8.6.3.6.1
8.5.3.6.2	8.6.3.6.2
8.5.3.6.2(A)	8.6.3.6.2.1
8.5.3.6.2(B)	8.6.3.6.2.2
8.5.3.6.2(C)	8.6.3.6.2.3
8.5.3.7	8.6.3.7
8.5.3.7.1	8.6.3.7.1
8.5.3.7.2	8.6.3.7.2
8.5.3.7.3	8.6.3.7.3
8.5.3.7.3(A)	8.6.3.7.3.1
8.5.3.7.3(B)	8.6.3.7.3.2
8.5.4	8.6.4
8.5.4.1	8.6.4.1
8.5.4.2	8.6.4.2
8.5.4.3	8.6.4.3
8.5.4.4	8.6.4.4
8.5.4.5	8.6.4.5
8.5.4.6	8.6.4.6
8.5.4.6(A)	8.6.4.6.1
8.5.4.6(B)	8.6.4.6.2
8.5.4.7	8.6.4.7
8.5.4.8	8.6.4.8
8.5.4.9	8.6.4.9
8.5.4.10	8.6.4.10
8.5.4.10(A)	8.6.4.10.1
8.5.4.10(B)	8.6.4.10.2
8.5.4.11	8.6.4.11
8.5.4.12	8.6.4.12
8.5.4.13	8.6.4.13
8.5.4.14	8.6.4.14
8.5.4.15	8.6.4.15
8.5.5	8.6.5
8.5.5.1	8.6.5.1
8.5.5.2	8.6.5.2
8.5.5.3	8.6.5.3
8.5.6	8.6.6
—	8.7 (new)
9.1	9.1
9.1.1	9.1.1
9.1.2	9.1.2
9.1.3	9.1.3
9.1.4	9.1.4
9.1.5	9.1.5
9.2	9.2
9.2.1	9.2.1
9.2.2	9.2.2
—	9.2.3 (new)
—	9.2.4 (new)
9.3	9.3
9.3.1	9.3.1
9.3.2	9.3.2
9.3.3	9.3.3
9.3.4	9.3.4
9.3.5	9.3.5
9.3.6	9.3.6
9.3.6.1	9.3.6.1
9.3.6.2	9.3.6.2
—	9.3.7 (new)
—	9.3.7.1 (new)
—	9.3.7.1.1 (new)
—	9.3.7.1.2 (new)
—	9.3.7.2 (new)
—	9.3.7.3 (new)
—	9.3.7.4 (new)
—	9.3.7.4.1 (new)
—	9.3.7.4.2 (new)
9.4	9.4
9.4.1	9.4.1
9.4.1.1	9.4.1.1
9.4.1.2	9.4.1.2
9.4.1.3	9.4.1.3
9.4.1.4	9.4.1.4
9.4.1.5	9.4.1.5
9.4.2	9.4.2
9.4.2.1	9.4.2.1
9.4.2.1.1	9.4.2.1.1
9.4.2.1.2	9.4.2.1.2
9.4.2.1.3	9.4.2.1.3
9.4.2.1.4	9.4.2.1.4
9.4.2.1.5	9.4.2.1.5
9.4.2.1.6	9.4.2.1.6
9.4.2.1.7	9.4.2.1.7
9.4.2.1.8	9.4.2.1.8
9.4.2.1.9	9.4.2.1.9
9.4.2.1.10	9.4.2.1.10
9.4.2.1.11	9.4.2.1.11
9.4.2.1.11.1	9.4.2.1.11.1
9.4.2.1.11.2	9.4.2.1.11.2
9.4.2.2	9.4.2.2
9.4.2.3	9.4.2.3
9.4.2.3.1	9.4.2.3.1
9.4.2.3.2	9.4.2.3.2
9.4.2.3.3	9.4.2.3.3
9.4.2.3.4	9.4.2.3.4
9.4.2.3.5	9.4.2.3.5
9.4.2.3.6	9.4.2.3.6
9.4.2.3.7	9.4.2.3.7
9.4.2.3.8	9.4.2.3.8
9.4.2.3.9	9.4.2.3.9
9.4.2.3.9.1	9.4.2.3.9.1
9.4.2.3.9.2	9.4.2.3.9.2
9.4.2.3.9.3	9.4.2.3.9.3
9.4.2.3.9.4	9.4.2.3.9.4
9.4.2.3.9.5	9.4.2.3.9.5
9.4.2.3.9.6	9.4.2.3.9.6
9.4.2.3.10	9.4.2.3.10
9.4.2.3.10.1	9.4.2.3.10.1
9.4.2.3.10.2	9.4.2.3.10.2
9.4.2.3.10.3	9.4.2.3.10.3
9.4.2.3.10.4	9.4.2.3.10.4

Copyright National Fire Protection Association
Provided by IHS under license with NFPA
No reproduction or networking permitted without license from IHS
Not for Resale

2002	2007
9.4.2.3.10.5	9.4.2.3.10.5
9.4.2.3.11	9.4.2.3.11
9.4.2.3.12	9.4.2.3.12
9.4.2.3.12.1	9.4.2.3.12.1
9.4.2.3.12.2	9.4.2.3.12.2
9.4.2.3.12.3	9.4.2.3.12.3
9.4.2.4	9.4.2.4
9.4.2.4.1	9.4.2.4.1
9.4.2.4.2	9.4.2.4.2
—	9.4.3 (new)
—	9.4.3.1 (new)
—	9.4.3.1.1 (new)
—	9.4.3.1.2 (new)
—	9.4.3.1.3 (new)
—	9.4.3.1.4 (new)
—	9.4.3.1.5 (new)
9.4.3	9.4.3.2
9.4.3.1	9.4.3.2.1
9.4.3.1.1	9.4.3.2.1.1
9.4.3.1.2	9.4.3.2.1.2
9.4.3.1.3	9.4.3.2.1.3
9.4.3.2	9.4.3.2.2
9.4.3.2.1	9.4.3.2.2.1
9.4.3.2.2	9.4.3.2.2.2
9.4.3.2.3	9.4.3.2.2.3
9.4.3.3	9.4.3.2.3
9.4.3.3.1	9.4.3.2.3.1
9.4.3.3.2	9.4.3.2.3.2
9.4.3.3.3	9.4.3.2.3.3
9.4.3.3.4	9.4.3.2.3.4
9.4.3.3.5	9.4.3.2.3.5
9.4.3.3.6	9.4.3.2.3.6
9.4.3.3.7	9.4.3.2.3.7
9.4.3.3.8	9.4.3.2.3.8
9.4.3.3.9	9.4.3.2.3.9
9.4.3.3.10	9.4.3.2.3.10
9.4.3.3.11	9.4.3.2.3.11
9.4.3.3.12	9.4.3.2.3.12
9.4.3.3.13	9.4.3.2.3.13
—	9.4.3.2.3.14 (new)
9.4.4	9.4.4
9.5	9.5
9.5.1	9.5.1
9.5.1.1	9.5.1.1
9.5.1.1.1	9.5.1.1.1
9.5.1.1.2	9.5.1.1.2
9.5.1.1.3	9.5.1.1.3
9.5.1.2	9.5.1.2
9.5.1.2.1	9.5.1.2.1

2002	2007
9.5.1.2.2	9.5.1.2.2
9.5.1.2.3	9.5.1.2.3
9.5.1.2.3.1	9.5.1.2.3.1
9.5.1.2.3.2	9.5.1.2.3.2
9.5.1.2.4	9.5.1.2.4
9.5.1.2.5	9.5.1.2.5
9.5.1.2.6	9.5.1.2.6
9.5.1.2.7	9.5.1.2.7
9.5.1.3	9.5.1.3
9.5.1.3.1	9.5.1.3.1
9.5.1.3.2	9.5.1.3.2
9.5.1.4	9.5.1.4
9.5.1.4.1	9.5.1.4.1
9.5.1.4.2	9.5.1.4.2
9.5.1.4.3	9.5.1.4.3
9.5.1.4.4	9.5.1.4.4
9.5.1.4.5	9.5.1.4.5
9.5.1.5	9.5.1.5
9.5.1.5.1	9.5.1.5.1
9.5.1.5.2	9.5.1.5.2
9.5.1.5.3	9.5.1.5.3
9.5.1.5.4	9.5.1.5.4
9.5.1.5.5	9.5.1.5.5
9.5.1.5.6	9.5.1.5.6
9.5.1.5.6.1	9.5.1.5.6.1
9.5.1.5.6.2	9.5.1.5.6.2
9.5.1.5.7	9.5.1.5.7
9.5.1.5.8	9.5.1.5.8
9.5.1.6	9.5.1.6
9.5.1.6.1	9.5.1.6.1
9.5.1.6.2	9.5.1.6.2
9.5.1.6.3	9.5.1.6.3
9.5.1.6.4	9.5.1.6.4
9.5.1.7	9.5.1.7
9.5.1.8	9.5.1.8
9.5.1.8.1	9.5.1.8.1
9.5.1.8.2	9.5.1.8.2
9.5.1.8.3	9.5.1.8.3
9.5.1.8.4	9.5.1.8.4
9.5.1.9	9.5.1.9
9.5.2	9.5.2
9.5.2.1	9.5.2.1
9.5.2.1.1	9.5.2.1.1
9.5.2.1.2	9.5.2.1.2
9.5.2.1.3	9.5.2.1.3
9.5.2.1.4	9.5.2.1.4
9.5.2.1.5	9.5.2.1.5
9.5.2.1.6	9.5.2.1.6
9.5.2.1.6.1	9.5.2.1.6.1
9.5.2.1.6.2	9.5.2.1.6.2

2002	2007
9.5.2.2	9.5.2.2
9.5.2.2.1	9.5.2.2.1
9.5.2.2.2	9.5.2.2.2
9.5.2.2.3	9.5.2.2.3
9.5.2.2.4	9.5.2.2.4
9.5.2.2.5	9.5.2.2.5
9.5.2.2.6	9.5.2.2.6
9.5.2.3	9.5.2.3
9.5.2.3.1	9.5.2.3.1
9.5.2.3.2	9.5.2.3.2
9.5.3	9.5.3
9.5.3.1	9.5.3.1
9.5.3.1.1	9.5.3.1.1
9.5.3.1.1.1	9.5.3.1.1.1
9.5.3.1.1.2	9.5.3.1.1.2
9.5.3.1.1.3	9.5.3.1.1.3
9.5.3.1.1.4	9.5.3.1.1.4
9.5.3.1.1.5	9.5.3.1.1.5
9.5.3.1.1.6	9.5.3.1.1.6
9.5.3.1.2	9.5.3.1.2
9.5.3.1.2.1	9.5.3.1.2.1
9.5.3.1.2.2	9.5.3.1.2.2
9.5.3.1.3	9.5.3.1.3
9.5.3.1.4	9.5.3.1.4
9.5.3.2	9.5.3.2
9.5.3.3	9.5.3.3
9.5.3.4	9.5.3.4
9.5.3.4.1	9.5.3.4.1
9.5.3.4.2	9.5.3.4.2
9.5.3.4.3	9.5.3.4.3
9.5.3.4.4	9.5.3.4.4
9.5.3.4.5	9.5.3.4.5
9.5.3.4.6	9.5.3.4.6
9.5.3.4.7	9.5.3.4.7
9.5.3.4.7.1	9.5.3.4.7.1
9.5.3.4.7.2	9.5.3.4.7.2
9.5.3.4.8	9.5.3.4.8
9.5.3.5	9.5.3.5
9.5.4	9.5.4
9.5.4.1	9.5.4.1
9.5.4.1.1	9.5.4.1.1
9.5.4.1.2	9.5.4.1.2
9.5.4.2	9.5.4.2
9.5.4.3	9.5.4.3
9.5.4.4	9.5.4.4
9.5.4.5	9.5.4.5
9.5.4.6	9.5.4.6
9.5.4.7	9.5.4.7
9.5.4.8	9.5.4.8
9.6	9.6

2002	2007
9.6.1	9.6.1
9.6.2	9.6.2
9.6.3	9.6.3
9.6.4	9.6.4
9.6.5	9.6.5
9.6.6	9.6.6
9.6.7	9.6.7
9.6.8	9.6.8
9.6.8.1	9.6.8.1
9.6.8.2	9.6.8.2
9.6.8.3	9.6.8.3
9.7	9.7
9.7.1	9.7.1
9.7.1.1	9.7.1.1
9.7.1.1.1	9.7.1.1.1
9.7.1.1.2	9.7.1.1.2
9.7.1.1.3	9.7.1.1.3
9.7.1.1.4	9.7.1.1.4
9.7.1.2	9.7.1.2
9.7.1.2.1	9.7.1.2.1
9.7.1.2.2	9.7.1.2.2
9.7.1.2.3	9.7.1.2.3
9.7.1.2.4	9.7.1.2.4
9.7.1.2.4.1	9.7.1.2.4.1
9.7.1.2.4.2	9.7.1.2.4.2
9.7.1.2.5	9.7.1.2.5
—	9.7.1.2.5.1 (new)
—	9.7.1.2.5.2 (new)
9.7.1.2.6	9.7.1.2.6
9.7.1.3	9.7.1.3
9.7.1.3.1	9.7.1.3.1
9.7.1.3.2	9.7.1.3.2
9.7.1.3.3	9.7.1.3.3
9.7.1.3.4	9.7.1.3.4
9.7.1.3.5	9.7.1.3.5
9.7.1.3.6	9.7.1.3.6
9.7.1.3.6.1	9.7.1.3.6.1
9.7.1.3.6.2	9.7.1.3.6.2
9.7.1.3.7	9.7.1.3.7
9.7.1.3.7.1	9.7.1.3.7.1
9.7.1.3.7.2	9.7.1.3.7.2
9.7.1.4	9.7.1.4
9.7.1.4.1	9.7.1.4.1
9.7.1.4.1.1	9.7.1.4.1.1
9.7.1.4.1.2	9.7.1.4.1.2
9.7.1.4.2	9.7.1.4.2
9.7.1.4.3	9.7.1.4.3
9.7.1.4.4	9.7.1.4.4
9.7.1.5	9.7.1.5

--`,,```,,,,````-`-`,,`,,`,`,,`---

Copyright National Fire Protection Association
Provided by IHS under license with NFPA
No reproduction or networking permitted without license from IHS

Not for Resale

2002	2007
9.7.1.5.1	9.7.1.5.1
9.7.1.5.2	9.7.1.5.2
9.7.1.6	9.7.1.6
9.7.1.6.1	9.7.1.6.1
9.7.1.6.2	9.7.1.6.2
9.7.1.6.3	9.7.1.6.3
9.7.1.6.4	9.7.1.6.4
9.7.1.6.4.1	9.7.1.6.4.1
9.7.1.6.4.2	9.7.1.6.4.2
9.7.1.6.5	9.7.1.6.5
9.7.1.6.6	9.7.1.6.6
9.7.1.6.7	9.7.1.6.7
9.7.2	9.7.2
9.7.2.1	9.7.2.1
9.7.2.1.1	9.7.2.1.1
9.7.2.1.2	9.7.2.1.2
9.7.2.1.3	9.7.2.1.3
9.7.2.1.4	9.7.2.1.4
9.7.2.1.5	9.7.2.1.5
9.7.2.2	9.7.2.2
9.7.2.2.1	9.7.2.2.1
9.7.2.2.2	9.7.2.2.2
9.7.3	9.7.3
9.7.3.1	9.7.3.1
9.7.3.2	9.7.3.2
9.7.3.3	9.7.3.3
9.7.3.4	9.7.3.4
9.7.3.5	9.7.3.5
9.7.3.6	9.7.3.6
9.7.3.7	9.7.3.7
9.7.3.8	9.7.3.8
9.7.3.9	9.7.3.9
9.7.3.10	9.7.3.10
9.7.3.11	9.7.3.11
9.7.3.12	9.7.3.12
10.1	10.1
10.1.1	10.1.1
10.1.2	10.1.2
10.1.3	10.1.3
10.1.4	10.1.4
10.2	10.2
10.2.1	10.2.1
10.2.1.1	10.2.1.1
10.2.1.2	10.2.1.2
10.2.1.2(A)	10.2.1.2.1
10.2.1.2(B)	10.2.1.2.2
10.2.1.2(B)	10.2.1.2.3
10.2.2	10.2.2
10.2.2.1	10.2.2.1
10.2.2.2	10.2.2.2
10.2.2.3	10.2.2.3
10.2.2.4	10.2.2.4
10.2.2.5	10.2.2.5
—	10.2.2.5.1 (new)
—	10.2.2.5.2 (new)
10.2.3	10.2.3
10.2.3.1	10.2.3.1
10.2.3.2	10.2.3.2
10.2.3.3	10.2.3.3
10.2.4	10.2.4
10.2.5	10.2.5
10.2.5.1	10.2.5.1
10.2.5.2	10.2.5.2
10.2.5.3	10.2.5.3
10.2.5.4	10.2.5.4
10.2.5.5	10.2.5.5
10.2.5.6	10.2.5.6
—	10.2.6 (new)
—	10.2.6.1 (new)
—	10.2.6.2 (new)
10.3	10.3
10.3.1	10.3.1
10.3.2	10.3.2
10.4	10.4
10.4.1	10.4.1
10.4.1.1	10.4.1.1
10.4.1.2	10.4.1.2
10.4.1.2.1	10.4.1.2.1
10.4.1.2.1.1	10.4.1.2.1.1
10.4.1.2.1.2	10.4.1.2.1.2
10.4.1.2.1.3	10.4.1.2.1.3
10.4.1.2.1.4	10.4.1.2.1.4
10.4.1.2.2	10.4.1.2.2
10.4.2	10.4.2
10.4.2.1	10.4.2.1
10.4.2.2	10.4.2.2
—	10.4.3 (new)
10.4.3	10.4.4
10.4.3.1	10.4.4.1
10.4.3.2	10.4.4.2
10.4.3.2.1	10.4.4.2.1
10.4.3.2.2	10.4.4.2.2
10.4.3.2.3	10.4.4.2.3
10.4.3.2.3.1	10.4.4.2.3.1
10.4.3.2.3.2	10.4.4.2.3.2
10.4.3.2.4	10.4.4.2.4
10.4.3.2.5	10.4.4.2.5
10.4.3.2.6	10.4.4.2.6
10.4.3.3	10.4.4.3
10.4.3.4	10.4.4.4
10.4.3.4.1	10.4.4.4.1
10.4.3.4.2	10.4.4.4.2
10.4.3.4.3	10.4.4.4.3
10.4.3.5	10.4.4.5
10.4.4	10.4.5
10.4.5	10.4.6
10.4.5.1	10.4.6.1
10.4.5.2	10.4.6.2
10.4.6	10.4.7
10.4.7	10.4.8
10.4.8	10.4.9
10.4.9	10.4.10
10.4.9.1	10.4.10.1
10.4.9.2	10.4.10.2
10.5	10.5
10.5.1	10.5.1
10.5.2	10.5.2
10.5.3	10.5.3
10.5.4	10.5.4
10.5.5	10.5.5
10.5.6	10.5.6
10.6	10.6
10.6.1	10.6.1
10.6.1.1	10.6.1.1
10.6.1.2	10.6.1.2
10.6.1.3	10.6.1.3
10.6.2	10.6.2
10.6.2.1	10.6.2.1
10.6.2.2	10.6.2.2
10.6.2.3	10.6.2.3
10.6.3	10.6.3
10.6.4	10.6.4
—	10.7 (new)
11.1	11.1
11.1.1	11.1.1
11.1.2	(deleted)
11.1.3	11.1.2
11.1.4	11.1.3
11.1.5	11.1.4
11.1.6	11.1.5
11.2	11.2
11.3	11.3
11.3.1	11.3.1
—	11.3.2 (new)
11.3.2	11.3.3
11.3.3	11.3.4
11.3.4	11.3.5
—	11.3.5.1 (new)
—	11.3.5.2 (new)
11.3.5	11.3.6
11.3.6	11.3.7
11.3.7	11.3.8
11.4	11.4
11.4.1	11.4.1
11.4.2	11.4.2
11.4.2.1	11.4.2.1
11.4.2.2	11.4.2.2
11.4.3	11.4.3
11.5	11.5 (new)
—	11.5.1 (new)
—	11.5.1.1 (new)
—	11.5.1.2 (new)
—	11.5.1.3 (new)
—	11.5.1.3.1 (new)
—	11.5.1.3.2 (new)
—	11.5.2 (new)
—	11.5.2.1 (new)
—	11.5.2.1.1 (new)
—	11.5.2.1.2 (new)
—	11.5.2.2 (new)
11.5.1	(deleted)
11.5.1.1	(deleted)
11.5.1.2	(deleted)
11.5.2	(deleted)
11.5.2.1	(deleted)
11.5.2.2	(deleted)
11.5.3	(deleted)
11.5.3.1	(deleted)
11.5.3.2	(deleted)
11.5.4	(deleted)
11.5.4.1	(deleted)
11.5.4.2	(deleted)
11.5.5	(deleted)
11.5.5.1	(deleted)
11.5.5.2	(deleted)
11.5.6	(deleted)
11.5.6.1	(deleted)
11.5.6.2	(deleted)
11.5.7	(deleted)
11.5.7.1	(deleted)
11.5.7.2	(deleted)
11.5.8	(deleted)
11.5.8.1	(deleted)
11.5.8.2	(deleted)
11.5.9	(deleted)
11.5.9.1	(deleted)

Copyright National Fire Protection Association
Provided by IHS under license with NFPA
No reproduction or networking permitted without license from IHS
Not for Resale

2002	2007
11.5.9.2	(deleted)
11.5.10	(deleted)
11.5.10.1	(deleted)
11.5.10.2	(deleted)
11.5.11	(deleted)
11.5.11.1	(deleted)
11.5.11.2	(deleted)
11.5.12	(deleted)
11.5.12.1	(deleted)
11.5.12.2	(deleted)
11.6	11.6
11.6.1	11.6.1
11.6.2	11.6.2
11.6.3	11.6.3
11.6.4	11.6.4
11.6.5	11.6.5
11.6.6	11.6.6
11.6.7	11.6.7
—	11.6.8 (new)
11.7	11.7
11.7.1	11.7.1
11.7.2	11.7.2
11.7.3	11.7.3
11.7.3.1	11.7.3.1
11.7.3.2	11.7.3.2
11.7.4	11.7.4
11.7.5	11.7.5
11.7.5.1	11.7.5.1
11.7.5.2	11.7.5.2
11.7.5.3	11.7.5.3
11.7.5.4	11.7.5.4
11.7.5.5	11.7.5.5
11.7.5.6	11.7.5.6
11.7.5.7	11.7.5.7
11.7.6	11.7.6
11.7.6.1	11.7.6.1
11.7.6.2	11.7.6.2
11.7.6.3	11.7.6.3
11.7.6.4	11.7.6.4
11.7.6.5	11.7.6.5
11.7.6.6	11.7.6.6
11.7.6.7	11.7.6.7
11.7.7	11.7.7
11.7.8	11.7.8
11.7.8.1	11.7.8.1
11.7.8.1(A)	11.7.8.1.1
11.7.8.1(B)	11.7.8.1.2
11.7.8.1(C)	11.7.8.1.3
11.7.8.2	11.7.8.2
11.8	11.8
11.8.1	11.8.1
11.8.1.1	11.8.1.1
11.8.1.2	11.8.1.2
11.8.1.3	11.8.1.3
11.8.1.4	11.8.1.4
11.8.2	11.8.2
11.8.2.1	11.8.2.1
11.8.2.2	11.8.2.2
11.8.2.3	11.8.2.3
11.8.2.4	11.8.2.4
11.8.3	11.8.3
11.8.3.1	11.8.3.1
11.8.3.2	11.8.3.2
11.8.3.3	11.8.3.3
11.8.3.4	11.8.3.4
11.8.3.5	11.8.3.5
11.8.4	11.8.4
11.8.4.1	11.8.4.1
11.8.4.2	11.8.4.2
11.8.4.3	11.8.4.3
11.8.4.4	11.8.4.4
11.8.4.5	11.8.4.5
11.8.5	11.8.5
11.9	11.9
11.10	11.10
11.11	11.11
11.11.1	11.11.1
11.11.2	11.11.2
—	11.12 (new)

Copyright National Fire Protection Association
Provided by IHS under license with NFPA
No reproduction or networking permitted without license from IHS
Not for Resale

Index

Copyright © 2006 National Fire Protection Association. All Rights Reserved.

The copyright in this index is separate and distinct from the copyright in the document that it indexes. The licensing provisions set forth for the document are not applicable to this index. This index may not be reproduced in whole or in part by any means without the express written permission of NFPA.

-A-

Acknowledge ..... 8.6.5.3(3)
Definition 3.3.1
Active multiplex systems ... 8.6.2.5.1, 8.6.2.5.3, 8.6.3.1, Table A.8.6.1, A.8.6.3.1.2 to A.8.6.3.1.7
Classification 8.6.3.1.6
Definition 3.3.2
Loading capacities ..... 8.6.3.1.7, Table 8.6.3.1.7, A.8.6.3.1.7
Testing ..... Table 10.4.2.2
Addressable devices 3.3.3
Circuits, notification appliances 6.8.6.4
Adoption of Code
Requirements 1.7
Sample ordinance ..... Annex D
Adverse conditions 8.6.2.5, 8.6.3.4.4, A.8.6.3.4.4
Definition 3.3.4
Aerial construction ..... 9.7.1.2.2, 9.7.1.4, 9.7.3.6, 9.7.3.9 to 9.7.3.12
Air ducts .....*see* Ducts, detectors in
Air sampling–type detectors 5.7.3.3, 5.7.5.3.3, A.5.7.3.3.3, A.5.7.3.3.5
Definition 3.3.43.1
Inspection ..... Table 10.3.1
Test methods ..... Table 10.4.2.2
Air stratification .....*see* Stratification
Alarm (definition) 3.3.5
Alarm service (definition) 3.3.6
Alarm signals ..... 4.4.3.1, A.4.4.3.1; *see also* Fire alarm signals; Supervisory signals; Trouble signals
Central station service ..... 8.3.7.1, A.8.3.7.1.2(1)
Coded 4.4.3.1, 4.4.3.2.2, 9.5.3.1.3, A.4.4.3.1
Deactivation 4.4.3.7, A.4.4.3.7
Definition 3.3.172.1
Distinctive .....*see* Distinctive signals
Ducts, detectors in 6.16.5.3, A.6.16.5.3
Elevator recall 6.16.3.11
End-to-end communication time ..... 8.6.4.7, Table A.8.6.1
Low-power radio (wireless) systems 6.17.3, A.6.17.3.1
Mass notification systems E.2.3.3, E.2.3.6
Off-premises ..... 6.3.3.1(10), 6.13
Positive alarm sequence .....*see* Positive alarm sequence
Proprietary supervising system ..... 8.4.4.1 to 8.4.4.4, 8.4.4.2.2.3, 8.4.4.3, 8.4.4.4, 8.4.5.6.1, A.8.4.4.3
Remote supervising station system 8.5.1.4, 8.5.2.1, 8.5.3.1.2, 8.5.4.2, A.8.5.2.1.2
Alarm verification features ..... 6.8.5.4.1, 6.8.5.4.3(3), Table 10.4.2.2, 11.7.8.2, A.6.8.5.4.1, A.11.7.8.2
Definition 3.3.8
Alert tone 6.9.10.2, 7.4.1.5
Definition 3.3.9
Alternate control stations, mass notification system E.2.2.4
Analog initiating devices (sensor) 10.4.4.5, A.10.4.4.5
Definition 3.3.89.1
Annunciation 4.4.6, A.4.4.6.3, A.4.4.6.6
Fire command center 4.4.6.5
Mass notification systems E.2.3.16
NEMA SB 30 fire service annunciation and interface .... Annex F
Protected premises fire alarm systems 6.8.1.1, 6.11, A.6.8.1.1, A.6.11.2
Supervising station communication methods ..... Table A.8.6.1
Visible zone indication 4.4.6.4
Alarm 4.4.6.1
Mass notification systems E.2.3.16.1, E.2.3.16.3
Supervisory and trouble 4.4.6.2
Zones 4.4.6.6, A.4.4.6.6
Annunciators .....*see also* Remote annunciators
Access and location 4.4.6.3, A.4.4.6.3
Definition 3.3.11
Elevators, use of 6.16.3.8, 6.16.3.9
Inspection ..... Table 10.3.1
Interface, standard emergency service 7.11, A.7.11
Testing ..... Table 10.4.2.2, Table 10.4.4
Apartment buildings ..... A.11.5.1.1; *see also* Household fire alarm systems
Definition 3.3.12
Application of code 1.3
Approved (definition) 3.2.1, A.3.2.1
Audible notification appliances ..... 7.4, A.7.4.1.1 to A.7.4.6.4; *see also* Emergency voice/alarm communications; Exit marking audible notification appliances
Audibility ..... 7.4.1.1 to 7.4.1.3, 7.4.2.1, 7.4.3.1, A.7.4.1.1 to A.7.4.1.3, A.7.4.2.1, A.7.4.3.1
Definition 3.3.113.1
Distinctive signals .....*see* Distinctive signals
Evacuation signals 6.8.6.5.1, 11.3.5, A.6.8.6.5.1, A.11.3.5
Fire command center 4.4.6.5
Household fire alarm systems 11.3.5, 11.3.6, 11.3.8, A.11.3.5
Trouble signals 11.6.4, 11.6.6, 11.6.7, 11.7.5.4
Location of appliances 7.4.7
Mass notification systems ..... E.2.3.5.1 to E.2.3.5.4, E.2.3.7
Nameplates 7.3.2.1, 7.3.2.2
Narrow band tone signaling for exceeding masked thresholds 7.4.5, A.7.4.5
Power failure notification 4.4.7.3.1
Private mode 7.4.2.3, 7.4.2.4, 7.4.3, A.7.4.3.1, A.7.4.3.2
Proprietary supervising systems 8.4.4.2.1
Public fire alarm reporting systems
Alarm receiving equipment ..... 9.5.1.2.5, 9.5.1.2.6, 9.5.1.4.2 to 9.5.1.4.5, 9.5.1.5.7, 9.5.2.2.3, 9.5.2.3.2, 9.5.3.4.7
Auxiliary fire alarm systems 9.4.3.2.3.11
Public mode 7.4.2, A.7.4.2
Remote supervising station systems 8.5.1.4, 8.5.1.5, 8.5.3.1, 8.5.3.1.4, 8.5.3.1.5
Sleeping areas 7.4.4, A.7.4.4.1
Supervisory signals 4.4.3.2.3, 4.4.3.2.4
Testing ..... Table 10.4.2.2, C.2.11, C.2.12
Textual appliances 7.8, A.7.8.1.2
Definition 3.3.113.1.2
Trouble signals 4.4.3.5, A.4.4.3.5.8.3, A.4.4.3.5.8.4
Household fire alarm systems 11.6.4, 11.6.6, 11.6.7, 11.7.5.4
Authority having jurisdiction (definition) 3.2.2, A.3.2.2
Automatic drift compensation 6.8.5.4.2
Automatic extinguishing systems .....*see* Extinguishing systems
Automatic fire detectors ...*see also* Fire–gas detectors; Heat detectors; Radiant energy–sensing fire detectors; Smoke detectors
Combination B.3.2.4.3
Definition 3.3.43.4
Definition 3.3.43.2
Fire extinguishing or suppression system operation (definition) 3.3.43.3
Initiating devices ..... Table 9.4.3.2.2.3
Inspection ..... Table 10.3.1
Manual fire box, available 6.8.5.1.2

Copyright National Fire Protection Association
Provided by IHS under license with NFPA
No reproduction or networking permitted without license from IHS
Not for Resale

Other types 5.10, A.5.10.2
Definition 3.3.43.13
Sensitivity testing 10.4.4.2, A.10.4.4.2
Spacing ..... Annex B
Testing ..... Table 10.4.2.2, Table 10.4.4
Manual fire box, available A.6.8.5.1.2
Two fire detectors, operation of ..... 6.8.5.4.3 to 6.8.5.4.5
Auxiliary fire alarm boxes .....*see* Fire alarm boxes
Auxiliary fire alarm systems ..... 9.4.3, A.9.4.3.2.2.1(1) to (2)(g)
Definition 3.3.67.1, A.3.3.67.1
Interfaces with public alarm systems 9.4.3.2.2.2
Multizone systems 9.4.3.2.3.12
Types of systems ..... 9.4.3.2, A.9.4.3.2.2.1(1) to (2)(g)
Average ambient sound level 7.4.1.1, 7.4.2.1, 7.4.2.5.1, 7.4.3.1, A.7.4.1.1, A.7.4.2.1, A.7.4.3.1
Definition 3.3.18, A.3.3.18

-B-

Batteries 4.4.1.8, A.4.4.1.8
Box ..... 9.4.2.3.8 to 9.4.2.3.10
Charging 4.4.1.8.3, 4.4.1.9.7, A.4.4.1.8.3.4, C.4
Metering 4.4.1.8.5
Supervision 4.4.1.8.6
Engine-driven generators 4.4.1.9.7
Float-charged 4.4.1.8.3.4, 9.5.1.8, A.4.4.1.8.3.4
Household fire alarm systems 11.6.1, 11.6.2, 11.6.4, 11.6.6, 11.6.7
Inspections ..... Table 10.3.1
Location 4.4.1.8.2
Low-power radio (wireless) system power 6.17.2
Primary (dry cell) 6.17.2, 11.6.1
Definition 3.3.133
Public fire alarm reporting systems ..... 9.4.2.3.8 to 9.4.2.3.10, 9.5.1.5.1 to 9.5.1.5.4, 9.5.1.8, 9.5.2.3.1, A.9.5.1.5.1(1) to (3)
Rechargeable 11.6.1, 11.6.2, 11.6.4
Replacement 10.4.8
Secondary power source 4.4.1.5.1, 4.4.1.5.2, 4.4.1.6.3.1, 6.16.7.3, 11.6.1, 11.6.2, 11.6.4, A.4.4.1.5.1, A.6.16.7.3
Testing ..... Table 10.4.2.2, Table 10.4.4
Beam construction (ceiling)
Definition 3.3.24.1
Detector spacing 5.6.3.1.2, 5.6.3.2.2, 5.6.5.3, 5.7.3.2.4, 11.8.4.4, A.5.6.5.3, A.5.7.3.2.4
Biological agent attacks, response to E.2.2
Bomb threats, evacuation for E.2.2
Box alarms .....*see* Fire alarm boxes
Box batteries ..... 9.4.2.3.8 to 9.4.2.3.10
Box circuits ..... 9.5.1.5.1, 9.5.1.5.6.2, 9.5.2.1, 9.5.2.2.1, 9.5.2.2.2, 9.5.4.6 to 9.5.4.8, 9.6.2, 9.7.2.2, A.9.5.1.5.1(1) to (3)
Building
Emergency radio communication system in 10.4.11, A.10.4.11
Wiring inside 9.7.1.2.3, 9.7.1.6, A.9.7.1.6.2
Building fire alarm command center ..... 4.4.3.2.3, 4.4.3.5.6(2)
Building fire alarm systems ..... 6.3.3.1; *see also* Protected premises (local) fire alarm systems
Definition 3.3.67.5.1
Burglar alarm systems ..... 8.6.3.2.2.2(D), 11.7.6.6

-C-

Cables
Aerial construction 9.7.1.2.2, 9.7.1.4
Fiber-optic 4.4.4.4, A.4.4.4.4
Inspection ..... Table 10.3.1
Testing ..... Table 10.4.2.2, Table 10.4.4
Inside buildings 9.7.1.2.3, 9.7.1.6, A.9.7.1.6.2
Leads down poles 9.7.1.5
Public cable plant 9.7, A.9.7.1.6.2
Underground 9.7.1.2.2, 9.7.1.3
Call forwarding equipment ..... 8.6.3.2.1.5(7), A.8.6.3.2.1.5(7)
Carbon monoxide detectors/detection systems ..... 6.8.4.8, Table 10.4.4, A.6.8.4.8
Carrier (definition) 3.3.20
Carrier system (definition) 3.3.21
Ceiling height
Definition 3.3.23
Fire development and B.3.2.3
Ceilings .....*see also* Sloping ceilings; Sloping peaked-type ceiling; Sloping shed-type ceiling; Smooth ceilings
Definition 3.3.22
Detector location and spacing on .... 5.6.3, 5.6.5, 5.7.3, 11.5.1.3.1, 11.5.1.3.2, 11.8.3.1 to 11.8.3.5, 11.8.4.1 to 11.8.4.5, A.5.6.3.1, A.5.6.5, A.5.7.3.1 to A.5.7.3.8, A.11.5.1.3.1, A.11.8.3.3 to A.11.8.3.5(10), Annex B
Flat ..... 5.7.3.2.4.2, 5.7.3.4.5, 11.8.3.1, A.5.7.3.2.4.2(3), A.5.7.3.2.4.2(4)
High 5.6.5.5, A.5.6.5.5.1, A.5.6.5.5.2
Shapes of (definition) 3.3.171
Stratification below .....*see* Stratification
Suspended 5.7.3.7
Visible notification appliances located on ..... 7.5.4.3.1, Table 7.5.4.3.1(b), 7.5.4.3.6, 7.5.4.3.7, A.7.5.4.3.6
Ceiling surfaces .....*see also* Beam construction (ceiling); Smooth ceilings; Solid joist construction
Girder (definition) 3.3.24.2
Central station ..... 4.4.3.5.6(3)
Definition 3.3.194.1
Equipment 8.3.6.1, A.8.3.6.1.6
Facilities 8.3.5
Inspection 10.4.2.1, A.10.4.2.1
Mass notification system E.1.3, E.2.2.4, E.2.3.16.1, E.4
Power supply, monitoring of 4.4.7.3.1.3
Presignal feature, use of 6.8.1.2, A.6.8.1.2
Central station fire alarm systems ..... 8.3, Table A.8.1, A.8.3.4 to A.8.3.7.5.3
Circuits, monitoring for integrity 4.4.7.1.10
Definition 3.3.67.7.1
Disposition of signals ..... 8.3.7, A.8.3.7.1.2(1) to A.8.3.7.5.3
Guard's signal 8.3.7.2
Personnel 8.3.6.2
Protected premises fire alarm systems 6.13.1
Record keeping and reporting 8.3.7.5.1, 8.3.8
Testing and maintenance 8.3.9, 10.2.2.4, 10.4.9
Central station service ..... 8.3, A.8.3.4 to A.8.3.7.5.3
Contract requirements 8.3.3
Definition 3.3.195.1
Indication of 8.3.4, A.8.3.4
Certification, central station service A.8.3.4
Certification of personnel ..... 4.3.2.2, 4.3.3, A.4.3.2.2(2), A.4.3.3(2)
Definition 3.3.29, A.3.3.29
Public fire alarm reporting systems 9.3.7.4
Channels .....*see also* Communications channels; Derived channel; Transmission channels
Definition 3.3.30
Radio 9.5.3.2
Definition 3.3.30.3, A.3.3.30.3
Chemical agent attacks, response to E.2.2
Circuit breakers, installation of 4.4.1.4.4
Circuit conductors 9.7.1.1
Circuit interface .....*see also* Interface equipment
Definition 3.3.31
Signaling line circuit interface (definition) 3.3.174
Testing ..... Table 10.4.2.2, 10.4.4.3
Circuits 4.4.4.4, A.4.4.4.4
Alarm signal 8.6.3.6.1
Class 6.4.2.1
Designations 6.4.2, A.6.4.2
Loading capacity 8.6.3.6.2
Notification appliance .....*see* Notification appliance circuits
Protected premises fire alarm systems 6.4.2, 6.4.3, A.6.4.2, A.6.4.3.2

Copyright National Fire Protection Association
Provided by IHS under license with NFPA
No reproduction or networking permitted without license from IHS
Not for Resale

Public fire alarm reporting systems
Alarm receiving equipment .... 9.5.1.2.2, 9.5.1.2.3.1, 9.5.1.2.3.2, 9.5.1.3, 9.5.1.5, 9.5.2.1.1, A.9.5.1.5.1(1) to (3)
Box .....*see* Box circuits
Protection, circuit 9.7.3, A.9.7.3
Public cable plant 9.7, A.9.7.1.6.2
Remote communications center 9.6.2, 9.6.8
Signal transmission facilities 9.7.2
Signaling lines/paths 6.4.2, 6.4.3, 6.8.2.4.1, A.6.4.2, A.6.4.3.2
Styles 6.4.2.2, A.6.4.2.2.2, C.3
Supervisory signal 8.6.3.6.1.1
Testing ..... 10.4.9, Annex C
Transient protection 4.4.4.3
Two-way telephone connections 6.10.1.16, A.6.10.1.16
Wiring diagrams C.2
Cloud chamber smoke detection (definition) 3.3.181.1
Code
Adoption requirements 1.7
Definition 3.2.3, A.3.2.3
Sample ordinance ..... Annex D
Coded
Alarm receiving equipment, public fire service communications center
Radio ..... 9.5.1.5.1, 9.5.3, A.9.5.1.5.1(1) to (3), A.9.5.3.1.1.1, A.9.5.3.4.3
Wired 9.5.2
Alarm signals 4.4.3.1, 4.4.3.2.2, A.4.4.3.1
Auxiliary systems, public fire alarm reporting systems ..... 9.4.3.2.2.1(1), Table 9.4.3.2.2.2, A.9.4.3.2.2.1(1)
Definition 3.3.33
Fire alarm boxes 8.6.3.3.1.2, A.8.6.3.3.1.2
Radio 9.4.2.3, 9.5.3, A.9.4.2.3.2, A.9.5.3.1.1.1, A.9.5.3.4.3
Wired 9.4.2.2
McCulloh systems 8.6.3.3.1.1, 8.6.3.3.1.2, A.8.6.3.3.1.2
Supervisory signals 4.4.3.2.1, 4.4.3.2.2
Combination detectors 5.9.1, 5.9.2, B.3.2.4.3
Definition 3.3.43.4, A.3.3.43.4
Integra1 heat seansors on 5.6.2.2, A.5.6.2.2
Testing ..... Table 10.4.2.2
Combination fire alarm and guard's tour box 5.13.2
Definition 3.3.63.2
Combination fire alarm systems ..... 6.3.3.1(11), 6.8.2.1, 6.8.4, 11.7.6, A.6.8.4.1 to A.6.8.4.11
Definition 3.3.67.2, A.3.3.67.2
Inspections ..... Table 10.3.1
Testing ..... Table 10.4.2.2, Table 10.4.4
Combination smoke control system 6.16.5.5, 6.16.5.6
Command center, fire .....*see* Fire command center
Common talk systems 6.10.1.6, 6.10.1.10, 6.10.1.14, A.6.10.1.6
Communications center .....*see* Public fire service communications center
Communications channels 4.4.7.1.13, 8.4.5.1
Definition 3.3.30.1
Compatibility listed ..... 4.4.2, Table A.8.1
Definition 3.3.37
Completion, records of .....*see* Records
Computer systems
Alarms and supervisory signals 8.3.6.1.3
Control 6.2.2, A.6.2.2.2
Uninterruptible power supply A.4.4.1.6
Wiring, monitoring for integrity 4.4.7.1.12
Concealed detectors 6.11.2, A.6.11.2
Conductors
Circuit 9.7.1.1
Installation 4.4.7.1, A.4.4.7.1
Testing ..... Table 10.4.2.2, Table 10.4.4
Contiguous property 8.4.2.2
Definition 3.3.138.1
Control equipment
Elevators 6.16.3.12, A.6.16.3.12
Emergency voice/alarm communication equipment 6.9.6, A.6.9.6.1
Enclosures containing 4.4.7.1.7, 4.4.7.1.8
Household fire alarm systems 11.7.5
Inspections ..... Table 10.3.1
Interface, standard emergency service 7.11, A.7.11
Protection of A.4.4.5
Software and firmware control 6.2.2, A.6.2.2.2
Testing ..... 10.4.1.2.1.1, 10.4.1.2.1.2, Table 10.4.2.2, Table 10.4.4
Control units .....*see also* Fire alarm control units
Definition 3.3.39
Elevators 6.16.4.4, A.6.16.4.4
Wireless (definition) ... 3.3.39.1; *see also* Radio alarm system (RAS)
Control valves 5.15.1
Converters ..... 9.5.1.5.1(3), 9.5.1.6, A.9.5.1.5.1(3)
Corridors, visible notification appliances located on 7.5.4.4, A.7.5.4.4
Coverage, detector 5.5.2, A.5.5.2

-D-

DACR .....*see* Digital alarm communicator receiver (DACR)
DACS .....*see* Digital alarm communicator system (DACS)
DACT .....*see* Digital alarm communicator transmitter (DACT)
Dampers, smoke and fire 6.16.5.2, A.6.16.5.3
DARR .....*see* Digital alarm radio receiver (DARR)
DARS .....*see* Digital alarm radio system (DARS)
DART .....*see* Digital alarm radio transmitter (DART)
Day-care homes .... A.11.5.1.1; *see also* Household fire alarm systems
Definition 3.3.40
Definitions ..... Chap. 3
Delinquency signal 6.15.3, 6.15.6
Definition 3.3.172.2
Derived channel ..... 8.6.3.1.1.1, 8.6.3.1.1.2, 8.6.3.1.2.1, 8.6.3.1.3, 8.6.3.1.4, A.8.6.3.1.2, A.8.6.3.1.5(2)
Definition 3.3.30.2
Design, fire alarm systems .... 4.3.2, 4.4.4.2, A.4.3.2.2(2), A.4.4.4.2.1, Table A.8.1, Annex B
Mass notification systems E.2.1.2, E.2.2, E.2.3.9
Performance-based .....*see* Performance-based design
Protected premises alarm systems 6.4.1
Public fire alarm reporting systems 9.3.7.1
Smoke detectors ..... 5.7.1.1 to 5.7.1.3, A.5.7.1.1 to A.5.7.1.3
Detection devices 6.8.5.4, A.6.8.5.4.1
Detectors .....*see also* Automatic fire detectors; Carbon monoxide detectors/detection systems; Combination detectors; Heat detectors; Multi-criteria detectors; Multi-sensor detectors; Smoke detectors
Concealed 6.11.2, A.6.11.2
Definition 3.3.43
In ducts .....*see* Ducts, detectors in
Inspection ..... Table 10.3.1
Positive alarm sequence, use of 6.8.1.3, A.6.8.1.3.4
Testing ..... Table 10.4.2.2, Table 10.4.4
Digital alarm communicator receiver (DACR) ..... 8.6.3.2.1.2, 8.6.3.2.1.5(5), 8.6.3.2.1.5(7), 8.6.3.2.2, A.8.6.3.2.1.3(C), A.8.6.3.2.1.5(7), A.8.6.3.2.2.2(A) to (F)
Definition 3.3.44
Equipment 8.6.3.2.2.1
Inspection ..... Table 10.3.1
Testing ..... Table 10.4.2.2, Table 10.4.4
Transmission channel ..... 8.6.3.2.2.2, A.8.6.3.2.2.2(A) to (F)
Digital alarm communicator system (DACS) ..... 8.6.3.2, Table A.8.6.1, A.8.6.3.2.1.1 to A.8.6.3.2.2.2(F)
Definition 3.3.45
Power supply 4.4.7.3.2, A.4.4.7.3.2
Digital alarm communicator transmitter (DACT)
Definition 3.3.46
Household fire alarm systems 11.7.8.1
Inspection ..... Table 10.3.1
Power failure trouble signal 4.4.7.3.1
Testing ..... Table 10.4.2.2, Table 10.4.4

Copyright National Fire Protection Association
Provided by IHS under license with NFPA
No reproduction or networking permitted without license from IHS
Not for Resale

Transmission channels ..... 8.6.3.2.1.4, A.8.6.3.2.1.4(A)
Transmission means ..... 8.6.3.2.1.4, 8.6.3.2.1.5, A.8.6.3.2.1.4(A), A.8.6.3.2.1.5(7)
Digital alarm radio receiver (DARR) 8.6.3.2.3.3
Definition 3.3.47
Inspection ..... Table 10.3.1
Testing ..... Table 10.4.2.2, Table 10.4.4
Digital alarm radio system (DARS) 8.6.3.2.3
Definition 3.3.48
Digital alarm radio transmitter (DART) 8.6.3.2.3.1, 8.6.3.2.3.2
Definition 3.3.49
Inspection ..... Table 10.3.1
Testing ..... Table 10.4.2.2, Table 10.4.4
Directly connected noncoded systems ..... 8.6.3.6, Table A.8.6.1, A.8.6.3.6.2.3
Display 8.4.4.2.2.1, 8.4.4.2.2.2, 8.4.4.2.2.4, 8.4.4.3, 8.4.4.4, A.8.4.4.3
Definition 3.3.50
Interface, standard emergency service 7.11, A.7.11
Transmission requirements ..... 8.6.5, A.8.6.5.1 to A.8.6.5.3
Distinctive signals 4.4.3.3, 6.8.4.7, 11.7.6.3, 11.7.6.6, A.6.8.4.7
Audible notification appliances ..... 4.4.3.6, 6.8.6.5.1, A.4.4.3.6.2(2), A.6.8.6.5.1
Evacuation 6.8.6.5, A.6.8.6.5.1, A.6.8.6.5.3
Mass notification systems E.2.3.3, E.2.3.7
Documentation .....*see* Records
Door release service 5.16.3.3, 5.16.6, 6.16.6, A.5.16.6.5.1.3
Doors, fire and smoke 6.16.5.2, A.6.16.5.3
Door unlocking devices 6.16.7, A.6.16.7.3
Doorway, double 5.16.6.5.4
Definition 3.3.52, A.3.3.52
Dormitories (definition) ..... 3.3.51; *see also* Household fire alarm systems
Double doorway 5.16.6.5.4
Definition 3.3.52, A.3.3.52
Drawings, record ..... 4.5.2.3(2)
Definition 3.3.155
Dual control 8.6.2.6
Definition 3.3.53
Ducts, detectors in 5.7.4.2, 5.7.5.3.4, 5.16.2.1, 5.16.3.1, 5.16.3.4, 5.16.4.2, 5.16.5, 6.16.5.3, A.5.7.4.2.2, A.5.16.1, A.5.16.2, A.5.16.4.2, A.5.16.5.2, A.6.16.5.3
Inspection ..... Table 10.3.1
Testing ..... Table 10.4.2.2, Table 10.4.4
Dwelling units .....*see also* Household fire alarm systems; One- and two-family dwellings
Definition 3.3.54
Detection, required 11.5.1, A.11.5.1
Low-power radio (wireless) systems 11.7.7
Multiple dwelling unit (definition) 3.3.54.1
Protected premises alarm systems interconnected 6.8.3
Single dwelling unit (definition) 3.3.54.2

-E-

Effective masked threshold 7.4.5, A.7.4.5
Definition 3.3.55
Electrical conductivity heat detectors 5.6.5.5.1
Elevators
Audible alarm notification appliances 7.4.2.3
Notification appliances in 6.8.6.2, A.6.8.6.2
Recall for fire fighters' service ... 6.16.3, A.6.16.3.1 to A.6.16.3.12.3
Alternate level recall ..... 6.16.3.12.2, A.6.16.3.12.2(4)
Designated level recall 6.16.3.12.1
Power shutdown warning 6.16.3.12.4
Visual warning 6.16.3.12.3, A.6.16.3.12.3
Shutdown ..... 6.16.4, A.6.16.4.1 to A.6.16.4.6
Ember B.5.1.4.2, B.5.3.1.3
Definition 3.3.56, A.3.3.56
Ember detectors ..... 5.8, A.5.8.1 to 5.8.5.4
Definition 3.3.43.20
Spacing ..... 5.8.3.3, A.5.8.3.3.1 to A.5.8.3.3.6
System design B.5.3
Ember detector sensitivity B.5.3.3, B.5.3.4.1
Definition 3.3.188
Emergency communications equipment ..... Table 10.4.2.2
Emergency equipment, status indicators 4.4.3.4.2, A.4.4.3.4.2
Emergency lighting, proprietary supervising station 8.4.3.4
Emergency service
Communications center ....*see* Public fire service communications center
Interface 7.11, A.7.11
NEMA SB 30 annunciation and interface ..... Annex F
Emergency voice/alarm communications ..... 6.3.3.1(7), 6.8.1.1, 6.9, A.6.8.1.1, A.6.9
Definition 3.3.57
Inspection ..... Table 10.3.1
Manual controls 6.9.6.6
Monitoring 4.4.7.2, A.4.4.7.2.1, E.2.3.17.2
Testing frequency ..... Table 10.4.4
Enforcement
Requirements 1.7
Sample ordinance ..... Annex D
Engine-driven generators ..... 4.4.1.5.1(2), 4.4.1.5.2.1, 4.4.1.5.2.2, 4.4.1.9, 4.4.7.3.1.4, A.4.4.1.5.1
Public fire alarm reporting systems 9.5.1.7
Testing ..... Table 10.4.2.2, Table 10.4.4
Engineering guide for automatic fire detector spacing ..... Annex B
Engine stops 4.4.1.4.4
Equivalency to code 1.5
Error detection/correction 8.6.4.10
Escape route 11.4.2
Evacuation 6.8.6.1, 6.8.6.3.1, 6.9.2.2, 6.9.3, 6.9.10, 6.9.11, A.6.2.1, A.6.9.10, A.6.9.11.1
Bomb threats, response to E.2.2
Definition 3.3.58, A.3.3.58
Positive alarm sequence, use of ..... 6.8.1.3.1 to 6.8.1.3.3
Power outages, during A.4.4.1.5.3
Voice 6.9, A.6.9
Evacuation signaling zones 6.9.6.7, 6.9.10.1, 6.9.10.3, 6.9.10.4.1, A.6.9.10.4.1
Definition 3.3.218.1, A.3.3.218.1
Evacuation signals 6.9.10.4.1, 7.4.1.5, 7.8.1.2, 11.2, 11.3.5, A.6.9.10.4.1, A.7.8.1.2, A.11.2, A.11.3.5
Backup equipment for A.4.4.7.2.1
Definition 3.3.172.3
Distinctive 6.8.6.5, A.6.8.6.5.1, A.6.8.6.5.3
Remote supervising station fire alarm systems 8.5.1.5
Tone generator 4.4.7.2.1, 6.9.8, A.4.4.7.2.1
Definition 3.3.65
Exit marking audible notification appliances ..... 6.16.8, 7.4.1.7, 7.4.6, A.6.16.8, A.7.4.6.1 to A.7.4.6.4
Definition 3.3.113.1.1
Testing ..... Table 10.4.2.2, Table 10.4.4
Exit plan 11.4.2
Definition 3.3.61
Exits
Door release service 5.16.3.3, 5.16.6, 6.16.6, A.5.16.6.5.1.3
Door unlocking devices for 6.16.7, A.6.16.7.3
Notification appliances, exit stair enclosures/exit passageways 6.8.6.2, A.6.8.6.2
Extinguishers, portable fire 8.4.3.3
Monitoring devices .... 5.14, 5.15.6, 6.8.4.9, Table 10.4.4, A.6.8.4.9
Definition 3.3.69
Extinguishing systems .....*see also* Waterflow alarms
Abnormal conditions, monitoring of ..... 6.3.3.1(3)
Alarm signal initiation 6.8.5.7
Automatic operation detectors 5.11, 5.12, A.5.11.1, A.5.11.2, A.5.12
Definition 3.3.43.3

Copyright National Fire Protection Association
Provided by IHS under license with NFPA
No reproduction or networking permitted without license from IHS
Not for Resale

Initiating devices and release service ..... 6.3.3.1(4), 6.8.5.4.4, 6.12, A.6.12.7
Auxiliary fire alarm systems ..... Table 9.4.3.2.2.3
Inspection ..... Table 10.3.1
Testing ..... 10.2.5, Table 10.4.2.2, Table 10.4.4
Supervisory devices and signal initiation 6.8.5.6, 6.8.5.8, 6.8.5.10, A.6.8.5.6
Definition 3.3.89.2

-F-

Fan control 6.16.5.2, A.6.16.5.3
Federal Communications Commission ..... 8.6.2.4.1, 8.6.3.2.3.2(B), 8.6.4.2
Field of view (definition) 3.3.62
Fire alarm and guard's tour box, combination 5.13.2
Definition 3.3.63.2
Fire alarm boxes ... 9.4, A.9.4.1.4 to A.9.4.3.2.2.1(2); *see also* Auxiliary fire alarm systems
Alarm receiving equipment ..... 9.5, A.9.5.1.5.1(1) to A.9.5.3.4.3
Remote receiving equipment 9.6
Testing ..... Table 10.4.2.2, Table 10.4.4
Auxiliary ..... 9.4, A.9.4.1.4 to A.9.4.3.2.2.1(2)
Definition 3.3.63.1
Inspections ..... Table 10.3.1
Testing ..... Table 10.4.2.2, Table 10.4.4
Coded .....*see* Coded
Inspection ..... Table 10.3.1
Manual ..... 4.4.4.6.2, 5.13, 6.3.3.1(1), 6.8.5.1.2, 6.8.5.2, 9.4, A.5.13.5, A.5.13.8, A.6.8.5.1.2, A.9.4.1.4 to A.9.4.3.2.2.1(2); *see also* subhead: Municipal (street)
Auxiliary fire alarm systems, application of .... Table 9.4.3.2.2.3
Definition 3.3.63.3
Inspections ..... Table 10.3.1
Location 5.13.5, 5.13.6, A.5.13.5
Mounting 5.13.3, 5.13.7
Non-fire emergency boxes, installation and marking of ..... E.2.3.13.1 to E.2.3.13.3
Signal initiation ..... 6.3.3.1(1), 6.8.5.2
Spacing 5.13.6
Testing ..... Table 10.4.2.2, Table 10.4.4
Master 9.4.4, C.2.16, C.2.17
Definition 3.3.63.4
Inspections ..... Table 10.3.1
Testing ..... Table 10.4.2.2, Table 10.4.4
Publicly accessible 9.4.2, A.9.4.2
Coded reporting systems
Location 9.4.2.1.6, 9.4.2.1.7, A.9.4.2.1.6
Power supplies ..... 9.4.2.3.8 to 9.4.2.3.12
Radio 9.4.2.3, A.9.4.2.3.2
Telephone boxes 9.4.2.4
Wired 9.4.2.2
Definition 3.3.63.5
Inspections ..... Table 10.3.1
Testing ..... Table 10.4.2.2, Table 10.4.4
Fire alarm control units ..... 4.4.3.2.3(1)
Definition 3.3.64, A.3.3.64
Household fire alarm systems, marking of 11.11.2
Inspections ..... Table 10.3.1
Master 8.6.2.1
Definition 3.3.64.1
Protected premises (local) 6.8.5.4.2
Dedicated function 6.8.5.5.1, 6.8.5.6.1, 6.16.3.2, A.6.3.3.2, A.6.16.3.2
Definition 3.3.64.2.1
Definition 3.3.64.2
HVAC system, smoke control use 6.16.5.4
Positive alarm sequence, acknowledgment of 6.8.1.3.1.1
Releasing service 6.12.1, 6.12.2, 6.12.8
Definition 3.3.64.2.2
System requirements 6.8.2, A.6.8.2
Protection of 4.4.5, A.4.4.5
Software and firmware control 6.2.2, A.6.2.2.2
Testing ..... 10.4.1.2.2, Table 10.4.2.2, 10.4.4.1, Table 10.4.4
Trouble signals, transmission of 6.13.3
Fire alarm control units (panels) ..... 4.4.3.5.6(1)
Elevators 6.16.3.2, 6.16.3.8, 6.16.3.9, 6.16.4.5, A.6.16.3.2
Protected premises 8.4.2.3, 8.4.5.1
Remote 6.9.10.4.3
Fire alarm signals .....*see also* Alarm signals; Tone generator
Combination systems 11.7.6.2, 11.7.6.3, 11.7.6.6
Definition 3.3.172.4
Initiation .....*see* Fire alarm boxes; Initiating devices
Inspections ..... Table 10.3.1
Presignal feature 6.8.1.2, A.6.8.1.2
Proprietary supervising station 8.4.4.2.2.3, 8.4.4.3.2, 8.4.4.4, 8.4.5.6.1
Remote supervising station system 8.5.2.1, A.8.5.2.1.2
Testing ..... Table 10.4.4
Fire alarm systems .....*see also* Inspections; Maintenance; Testing
Central station .....*see* Central station fire alarm systems
Classification 1.3.1
Combination ..... 6.3.3.1(11), 6.8.2.1, 6.8.4, A.6.8.4.1 to A.6.8.4.11
Definition 3.3.67.2, A.3.3.67.2
Compatibility 4.4.2
Definition 3.3.67
Design .....*see* Design, fire alarm systems
Documentation .....*see* Records
Fundamentals ..... Chap. 4
Household .....*see* Household fire alarm systems
Initiating device, connection to 5.4.7, A.5.4.7
Installation ..... 4.3.3, 4.4.4.2, 11.3.2, 11.3.3, 11.4.3, 11.8, A.4.3.3(2), A.4.4.4.2.1, A.11.3.3, A.11.4.3, A.11.8.2.2 to A.11.8.4.5
Installation conductors and signaling channels, monitoring of 4.4.7.1, A.4.4.7.1
Interfaces .....*see* Interface equipment
Limitations ..... 4.4.4, A.4.4.4.1(1) to A.4.4.4.4
Mass notification systems E.3.1
Notification appliances .....*see* Notification appliances
Performance ..... 4.4.4, A.4.4.4.1(1) to A.4.4.4.4
Power supply .....*see* Power supplies
Protected premises .....*see* Protected premises (local) fire alarm systems
System functions ..... 4.4.3, A.4.4.3.1 to A.4.4.3.7
Fire command center ..... 4.4.3.2.3(2), 4.4.3.5.6(2)
Annunciation 4.4.6.5
Definition 3.3.68
Survivability 6.9.10.4.1, A.6.9.10.4.1
Voice/alarm signaling service A.6.9.6.1
Fire doors 6.16.5.2, A.6.16.5.3
Fire extinguishing monitoring devices 5.14, 5.15.6, 6.8.4.9, A.6.8.4.9
Definition 3.3.69
Firefighter's Smoke Control Station (FCFS) 6.16.5.5
Fire–gas detectors ..... Table 10.4.2.2, Table 10.4.4
Definition 3.3.43.6
Fire growth B.2.3.1.4.1, B.2.3.2.1.2, B.2.3.2.3, B.3.2.6
Fire models
Computer B.6
Detector response B.5.1.6
Fire pumps
Monitoring 6.8.5.9.1, 6.8.5.9.2
Telephone station/jack, pump room 6.10.1.11
Fire rating (definition) 3.3.70
Fire safety function control devices (definition) 3.3.71
Fire safety functions ..... 6.3.3.1(5), 6.8.1.1, 6.8.2.4.1, 6.8.5.4.4, 6.16, A.6.8.1.1, A.6.16.2.2 to A.6.16.8
Definition 3.3.72
Status indicators 4.4.3.4, A.4.4.3.4.2
Testing ..... Table 10.4.2.2
Fire service .....*see* Emergency service; Public fire service communications center

Copyright National Fire Protection Association
Provided by IHS under license with NFPA
No reproduction or networking permitted without license from IHS
Not for Resale

Fire wardens
Definition 3.3.73
Telephone use by 6.10.1.12, 6.10.1.13
Fire warning equipment (definition) 3.3.74
Fixed-temperature detectors 5.6.4, 5.7.5.1.1, 10.4.4.4, 11.7.3.2, A.5.6.4, A.11.7.3.2
Definition 3.3.43.7, A.3.3.43.7
Spacing B.3.3.1
Test methods ..... Table 10.4.2.2
Flame B.5.1.4.1, B.5.2.1.1
Definition 3.3.76
Flame detectors ..... 5.8, A.5.8.1 to 5.8.5.4
Definition 3.3.43.8, A.3.3.43.8
Spacing ..... 5.8.3.2, A.5.8.3.2.1 to A.5.8.3.2.6
System design B.5.2
Video image flame detection .....*see* Video image flame detection (VIFD)
Flame detector sensitivity B.5.2.1, B.5.2.3, B.5.2.4
Definition 3.3.78
Follow-up program 8.3.4, A.8.3.4
Fuel 4.4.1.9.6

-G-

Gateway 6.8.2.4.2
Definition 3.3.79
Generators .....*see* Engine-driven generators
Girders, ceiling (definition) 3.3.24.2
Grounding 4.4.4.5, 4.4.7.1.9
Guard's tour
Equipment inspection ..... Table 10.3.1
Equipment testing ..... Table 10.4.2.2, Table 10.4.4
Supervisory service ..... 6.3.3.1(8), 6.14, 6.15
Suppressed signal system ..... 6.15, 8.6.3.2.2.2(D)
Transmitter ..... 8.6.3.2.2.2(E)
Guard's tour box and fire alarm system, combination 5.13.2
Definition 3.3.63.2
Guard's tour reporting stations 6.14
Definition 3.3.80
Guard's tour supervisory signal 8.3.7.2, 8.4.5.6.2
Definition 3.3.172.5
Guest rooms 11.5.1.1, A.11.5.1.1
Definition 3.3.82
Guest suites 11.5.1.1, A.11.5.1.1
Definition 3.3.83

-H-

Heat alarms 11.1.2, A.11.1.2
Definition 3.3.84
Installation 11.8.4, A.11.8.4
Interconnection of 11.8.2.2, A.11.8.2.2
Performance of 11.7.3, A.11.7.3
Power supplies, household fire alarm systems 11.6.1
Testing 11.7.4
Heat detectors ..... 4.4.5, 5.5, 5.6, A.5.5.2, A.5.6.1.1 to A.5.6.5.5.2
Color coding 5.6.2.1
Combination detectors, integral heat sensors on 5.6.2.2, A.5.6.2.2
Correlations B.3.3.3, B.3.3.4
Coverage 5.5.2, A.5.5.2
Definition 3.3.43.9
Electrical conductivity (definition) 3.3.43.5
Elevators 6.16.4.1, 6.16.4.2, 6.16.4.5, 6.16.4.6, A.6.16.4.6
Inspection ..... Table 10.3.1
Installation 11.8.4, A.11.8.4, B.1.3.2
Location 5.6.3, 11.8.4, A.5.6.3.1, A.11.8.4
Marking 5.6.2.3
Multi-sensor detectors, integral heat sensors on 5.6.2.2, A.5.6.2.2
Performance 11.7.1, 11.7.3, A.11.7.3, B.3
Self-diagnostic 11.7.1
Spacing ... 5.6.5, Table 5.6.5.5.1, A.5.6.5, A.5.6.5.5.1, B.1.3.2, B.3.3
Temperature classification ..... 5.6.2, Table 5.6.2.1.1, 5.6.4, A.5.6.2.2, A.5.6.4
Testing ..... Table 10.4.2.2, 10.4.4.4, Table 10.4.4
Theoretical considerations B.3.3.2
Heating, ventilating, and air conditioning (HVAC) systems 5.7.4, 6.16.5, A.5.7.4.1, A.5.7.4.2.2, A.6.16.5.3
High air movement areas ..... 5.7.5.3, Fig. 5.7.5.3.3, A.5.7.5.3.3
High-rack storage 5.7.5.2, A.5.7.5.2
Hold-up alarms ..... 4.4.3.6(3)
Hotels ..... A.11.5.1.1; *see also* Household fire alarm systems
Definition 3.3.86
Household fire alarm systems ..... 5.1.4, Chap. 11
Assumptions 11.4, A.11.4
Equipment 11.4.3, A.11.4.3
Escape route 11.4.2
Occupants 11.4.1
Basic requirements 11.3, A.11.3.3, A.11.3.5
Combination system 11.7.6
Definition 3.3.67.3
Detection ..... 11.5, A.11.5.1 to A.11.5.2.2; *see also* Heat detectors; Smoke detectors
Equipment performance ..... 11.7, A.11.7.2 to A.11.7.8.2
Fire danger in home A.11.2
Installation ..... 11.8, A.11.8.2.2 to A.11.8.4.5
Maintenance and tests ..... 10.4.5 to 10.4.7, 11.4.3, 11.10, A.11.4.3
Markings and instructions 11.11
Notification appliances .....*see* Notification appliances
Optional functions 11.9
Power supplies 11.6
Humidity variation ..... 4.4.4.1, A.4.4.4.1(1), E.2.3.8
Hunt groups ..... 8.6.3.2.2.2, A.8.6.3.2.2.2(A) to (F)
Definition 3.3.88
Loading capacities ..... 8.6.3.2.2.2(C), A.8.6.3.2.2.2(C)

-I-

Impairments 4.6, 10.2.1.2, A.4.6, E.2.5
Initiating device circuits 4.4.7.1.1, 6.4.2, 6.8.5.5.2, 6.8.5.6.2, A.6.4.2, A.6.8.5.5.2, A.6.8.5.6.2
Definition 3.3.90
Performance/capacities ..... 6.5, Table 6.5, A.6.5
Testing ..... C.1, C.2.5, C.2.6, C.2.9 to C.2.13
Initiating devices ..... Chap. 5, 6.3.3.1(2), 6.8.5.3, A.6.8.5.3.2; *see also* Automatic fire detectors
Auxiliary fire alarm systems 9.4.3.2.2.3, 9.4.3.2.3.12
Definition 3.3.89
Extinguishing system operation, detection of 5.11, 5.12, A.5.11.1, A.5.11.2, A.5.12
Fire alarm system, connection to 5.4.7, A.5.4.7
General requirements 5.4, A.5.4.7
Household fire alarm systems 11.7.5.6
Inspection ..... Table 10.3.1
Installation 4.4.4.6, 5.4, A.5.4.7
Manual initiation .....*see* Fire alarm boxes
Performance-based design 5.3, A.5.3
Protected premises alarm systems ..... 6.4.2, 6.8.5, 6.8.5.4, A.6.4.2, A.6.8.5.1.2 to A.6.8.5.6.2, A.6.8.5.4.1
Actuation time 6.8.1.1, A.6.8.1.1
Positive alarm sequence, use of ..... 6.8.1.3.1 to 6.8.1.3.3
Supervisory signals 5.15, 6.8.5.6, 6.8.5.8, 6.8.5.10, A.6.8.5.6
Testing ..... 10.4.1.2.1.1, 10.4.1.2.1.2, 10.4.1.2.1.4(2), Table 10.4.2.2, Table 10.4.4, C.2.1 to C.2.6
Waterflow alarms .....*see* Waterflow alarms
Inspections ..... 10.1 to 10.3, A.10.2.2.1 to A.10.3.1
Form ..... Fig. 10.6.2.3
Frequency ..... 10.3.1, Table 10.3.1, A.10.3.1
Mass notification systems E.2.6
Records ..... 10.6.2, Fig. 10.6.2.3, A.10.6.2.3
Remote supervising station systems 8.5.6
Visual ..... 10.3, Table 10.3.1, A.10.3.1

--`,,```,,,,````-`-`,,`,,`,`,,`---

Copyright National Fire Protection Association
Provided by IHS under license with NFPA
No reproduction or networking permitted without license from IHS
Not for Resale

Installation
Conductors 4.4.7.1, A.4.4.7.1
Fire alarm systems ..... 4.3.3, 4.4.4.2, 11.3.2, 11.3.3, 11.4.3, 11.8, A.4.3.3(2), A.4.4.4.2.1, A.11.3.3, A.11.4.3, A.11.8.2.2 to A.11.8.4.5
Heat detectors 11.8.4, A.11.8.4, B.1.3.2
Initiating devices 4.4.4.6, 5.4, A.5.4.7
Mass notification systems ..... E.2.1.1 to E.2.1.3, E.2.3.9
Protected premises alarm systems 6.4.1
Public fire alarm reporting systems 9.1.1, 9.2.1, 9.3.7.2, A.9.2.1
Smoke detectors .....*see* Smoke detectors
Instructions, household fire alarm systems 11.11
Integrity 4.4.7
Coded radio reporting systems 9.5.3.4, A.9.4.2.3.2
Emergency voice/alarm communications systems 4.4.7.2, A.4.4.7.2.1, E.2.3.17.2
Household fire alarm systems 11.7.5.6, 11.8.2.4
Installation conductors 4.4.7.1, A.4.4.7.1
Mass notification systems E.2.3.17
Power supplies 4.4.7.3, A.4.4.7.3.2, A.4.4.7.3.3, E.2.3.17.3
Protected premises fire alarm systems ..... 6.3.3.1(12), 6.4, A.6.4.2 to A.6.4.3.2
Elevator shutdown, heat detectors for 6.16.4.5
Interconnection 6.8.3.4, 6.8.5.11.2, 6.16.2.6
Low-power radio (wireless) systems 6.17.4
Signaling paths 6.4.3.2, A.6.4.3.2
Speaker amplifiers 6.9.8
Suppression systems 6.8.5.7.2
Tone-generating equipment 4.4.7.2.1, 6.9.8, A.4.4.7.2.1
Remote alarm receiving equipment 9.6.2, 9.6.3, 9.6.5
Signaling channels 4.4.7.1, A.4.4.7.1, E.2.3.17.1
Supervising station fire alarm system transmission technology 8.6.4.4
Interconnections
Household fire alarm systems 11.7.5.6
Metallic 9.7.1, A.9.7.1.6.2
Notification appliances 7.1.6
Proprietary supervising station systems 8.4.2.4, A.8.4.2.4
Smoke detectors 11.8.2, A.11.8.2.2
Interface equipment
Auxiliary and public fire alarm systems 9.4.3.2.2.2
Circuit interface .....*see* Circuit interface
Inspection ..... Table 10.3.1
NEMA SB 30 fire service annunciation and interface .... Annex F
Notification appliances, emergency service interface 7.11, A.7.11
Testing ..... Table 10.4.2.2, 10.4.4.3, Table 10.4.4
Inverters ..... 9.5.1.5.1 to 9.5.1.5.4, 9.5.1.6, A.9.5.1.5.1(1) to (3)
Ionization smoke detection A.5.16.4.2
Definition 3.3.181.2, A.3.3.181.2

-L-

Labeled (definition) 3.2.4
Leg facility 8.4.4.5.2, 8.6.2.5.1, 8.6.3.1.3, 8.6.3.1.6.1
Definition 3.3.92
Level ceilings ..... 5.7.3.2.4.2, 5.7.3.4.5, A.5.7.3.2.4.2(3), A.5.7.3.2.4.2(4)
Definition 3.3.22.1
Life safety network 6.16.2.7
Definition 3.3.94
Light and power service ..... 4.4.1.4.1(1)
Line-type detectors 5.6.3.2, 5.6.3.2.3, 5.6.5.5.1
Definition 3.3.43.10
Listed
Definition 3.2.5, A.3.2.5
Equipment 4.3.1, 11.3.1
Notification appliances 7.3.1
Supervising station alarm systems ..... Table A.8.1
Living areas 11.5.1.1, 11.5.1.2, A.11.5.1.1
Definition 3.3.95
Loading capacities
Active multiplex systems ..... 8.6.3.1.7, Table 8.6.3.1.7, A.8.6.3.1.7
Definition 3.3.96
Digital alarm communicator receiver (DACR) hunt groups ..... 8.6.3.2.2.2(C), A.8.6.3.2.2.2(C)
Directly connected noncoded systems 8.6.3.6.2
McCulloh systems 8.6.3.3.3, A.8.6.3.3.3.7
One-way private radio alarm systems 8.6.3.5.6
Supervising station communication methods ..... Table A.8.6.1
System unit 8.6.4.6
Two-way radio frequency (RF) multiplex systems ..... 8.6.3.4.5, Table 8.6.3.4.5
Local energy type auxiliary fire alarm system ..... 9.4.3.2.2.1(1), 9.4.3.2.2.2, 9.4.3.2.2.3, A.9.4.3.2.2.1(1)
Definition 3.3.67.1.1
Lodging or rooming houses ..... A.11.5.1.1; *see also* Household fire alarm systems
Definition 3.3.97
Loss of power
Definition 3.3.98
Trouble signals 4.4.7.3.1
Low-power radio transmitters ..... 6.17, Table 10.4.2.2, 11.6.2, 11.7.7, A.6.17
Definition 3.3.99

-M-

Maintenance ..... 10.1, 10.2, 10.5, A.10.2.2.1 to A.10.2.6.1
Central station service 8.3.9
Definition 3.3.100
Household fire alarm systems 10.4.6.2, 10.4.7, 11.4.3, 11.10, A.11.4.3
Mass notification systems E.2.6
Proprietary supervising station alarm systems 8.4.7
Public fire alarm reporting systems ..... 9.2.1, 9.3, A.9.2.1, A.9.3.7.4.1(2)
Records 10.6.2, A.10.6.2.3
Remote supervising station systems 8.5.1.2, 8.5.5.2, 8.5.6
Supervising station fire alarm systems 8.6.6
Manual fire alarm boxes .....*see* Fire alarm boxes
Manual non-fire emergency boxes, installation and marking of ..... E.2.3.13.1 to E.2.3.13.3
Markings
Heat detectors 5.6.2.3
Household fire alarm systems 11.11
Masked threshold .....*see* Effective masked threshold
Mass notification systems ..... 6.8.4.11, 6.8.6, Annex E
Definition 3.3.102, A.3.3.102
Master boxes .....*see* Fire alarm boxes
Master control (panel) unit .....*see* Control units (panels)
McCulloh systems ..... 8.6.3.3, Table A.8.6.1, A.8.6.3.3.1.2 to A.8.6.3.3.4
Inspection ..... Table 10.3.1
Loading capacity 8.6.3.3.3, A.8.6.3.3.3.7
Testing ..... Table 10.4.2.2, Table 10.4.4, C.3.6
Transmission channels ..... 8.6.3.3.2, A.8.6.3.3.2.7(3), A.8.6.3.3.2.8(4)(c)
Transmitters 8.6.3.3.1, A.8.6.3.3.1.2, A.8.6.3.3.1.4
Measurement, units of 1.6, A.1.6.4
Metallic conductors, testing of ..... Table 10.4.2.2, Table 10.4.4
Metallic systems and interconnections ..... 8.6.3.3.2.7, 8.6.3.3.2.8, 9.7.1, A.8.6.3.3.2.7(3), A.8.6.3.3.2.8(4)(c), A.9.7.1.6.2
Microwave radio systems, private ..... 8.6.3.2.1.4, 8.6.3.7, Table A.8.6.1, A.8.6.3.2.1.4(A), A.8.6.3.7.1, A.8.6.3.7.2(4)
Inspection ..... Table 10.3.1
Testing ..... Table 10.4.2.2, Table 10.4.4
Monitoring ..... Table A.8.1
Control units 6.8.2.5
Fire extinguishing monitoring devices ..... 5.14, 5.15.6, 6.8.4.9, Table 10.4.4, A.6.8.4.9
Definition 3.3.69

--`,,```,,,,````-`-`,,`,,`,`,,`---

Copyright National Fire Protection Association
Provided by IHS under license with NFPA
No reproduction or networking permitted without license from IHS
Not for Resale

Fire pumps 6.8.5.9.1, 6.8.5.9.2
Household fire alarm systems 11.7.5.6, 11.7.8.2, A.11.7.8.2
Optional system functions 11.9
For integrity .....*see* Integrity
Waterflow alarm-initiating devices 6.8.5.5.1
Motor generators ..... 9.5.1.5.1(3), 9.5.1.5.3, 9.5.1.5.4, 9.5.1.6, A.9.5.1.5.1(3); *see also* Engine-driven generators
Multi-criteria detectors 5.9.1, 5.9.3
Definition 3.3.43.11, A.3.3.43.11
Testing ..... Table 10.4.2.2
Multiple buildings
Mass notification systems E.2.3.16.5, E.3.3
Supervising station systems 8.6.2.3
Multiple dwelling unit (definition) ..... 3.3.54.1; *see also* Apartment buildings
Multiple station alarm ..... 5.1.4, Chap. 11
Combination systems 11.7.6.7
Definition 3.3.105
Interconnection 11.8.2, A.11.8.2.2
One- and two-family dwelling units 10.4.5, 10.4.7, 11.5.1.1, A.11.5.1.1
Testing 11.7.4
Multiple station alarm devices
Definition 3.3.106
Listed 11.3.1
Multiplexing (definition) ... 3.3.107; *see also* Active multiplex systems; Two-way radio frequency (RF) multiplex systems
Multi-sensor detectors 5.9.1, 5.9.4
Definition 3.3.43.12, A.3.3.43.12
Integra1 heat seansors on 5.6.2.2, A.5.6.2.2
Testing ..... Table 10.4.2.2
Municipal fire alarm (street) boxes .....*see* Fire alarm boxes
Municipal fire alarm systems .....*see* Public fire alarm reporting systems

-N-

Nameplates, fire alarm systems 7.3.2
National Electrical Code 8.6.4.3
911 public safety answering point 8.3.6.1.6.1
Noncontiguous property 8.4.2.2
Definition 3.3.138.2
Nonrequired (voluntary) system 5.5.2.3, 6.2.3, A.6.2.3
Definition 3.3.111, A.3.3.111
Nonrestorable initiating device 3.3.89.3
Notification appliance circuits ..... 4.4.7.1.1, 4.4.7.1.5, 6.4.2, 6.7, Table 6.7, 6.8.6.4, A.6.4.2
Definition 3.3.114
Notification appliances ..... Chap. 7; *see also* Exit marking audible notification appliances; Mass notification systems
Activation of ..... 6.3.3.1(6), 6.8.1.1, A.6.8.1.1
Positive alarm sequence, use of ..... 6.8.1.3.1 to 6.8.1.3.3
Turning off activated system 11.7.5.5
Alternative methods A.7.1
Audible signals .....*see* Audible notification appliances
Connections 7.3.6, A.7.3.6
Definition 3.3.113
In elevator cars 6.8.6.2, A.6.8.6.2
In exit stair enclosures and exit passageways 6.8.6.2, A.6.8.6.2
Household fire alarm systems ... 11.5, 11.5.2, A.11.5.1 to A.11.5.2.2, A.11.5.2.1.1, A.11.5.2.2
Integrity, monitoring for 11.7.5.6
Optional functions 11.9
Power supplies 11.6.5
Testing 11.8.2.4
Inspection ..... Table 10.3.1
Interconnection of appliances 7.1.6
Mounting 7.3.5
Nameplates 7.3.2
Physical construction 7.3.3, A.7.3.3.2
Protection 7.3.4, A.7.3.4
Requirements 7.1.1, 7.1.2, A.7.1.5
Standard emergency service interface 7.11, A.7.11
Supplementary visible signaling method 7.7
Testing ..... 10.4.1.2.1.1, 10.4.1.2.1.2, Table 10.4.2.2, Table 10.4.4
Textual appliances
Audible 7.8, A.7.8.1.2
Visible 7.9, A.7.9
Visible signals .....*see* Visible notification appliances
Notification before testing 10.2.3, A.10.2.3
Notification zones .....*see* Zones
Nuisance alarms ..... 6.8.5.4.1(1), 10.4.4.2.3.1, 10.4.4.2.3.2; *see also* Alarm verification features
Definition 3.3.5.1

-O-

Occupant notification ..... 6.8.6.1; *see also* Emergency voice/alarm communications; Evacuation; Mass notification systems; Relocation; Voice/alarm signaling service
Octave
Definition 3.3.117
One-third octave (definition) 3.3.117.1
Off-hook ..... 6.10.1.7 to 6.10.1.9, 8.6.3.1.3, 8.6.3.2.1.3, Table 10.4.2.2, A.8.6.3.2.1.3
Definition 3.3.118
One- and two-family dwellings ... 10.4.5 to 10.4.7, 11.5.1, A.11.5.1; *see also* Household fire alarm systems
One-third octave (definition) 3.3.117.1
One-way private radio alarm systems ..... 8.6.2.5.2, 8.6.3.5, Table A.8.6.1, A.8.6.3.5.2
Independent receivers 8.6.3.5.1
Maximum operating time 8.6.3.5.2, A.8.6.3.5.2
Supervision 8.6.3.5.3
System categories 8.6.3.5.5
Transmission channels 8.6.3.5.4
On-hook 8.6.3.1.3
Definition 3.3.119
On-premises communication equipment 8.6.4.12
Open area detection (protection) (definition) 3.3.120
Operating mode
Private 6.8.6.1, 7.4.2.3, 7.4.2.4, 7.4.3, 7.6, 7.9.3.1, A.7.4.3.1, A.7.4.3.2, A.7.6
Definition 3.3.121.1
Public 6.8.5.4.5, 6.8.6.1, 7.4.2, 7.5, 7.9.3.2, A.7.4.2, A.7.5
Definition 3.3.121.2
Operating system software 6.2.2, A.6.2.2.2
Definition 3.3.122
Other fire detectors 5.10, A.5.10.2
Definition 3.3.43.13
Overcurrent protection
Primary power supply 4.4.1.4.3
Storage batteries 4.4.1.8.4
Ownership
Definition 3.3.123, A.3.3.123
Inspection, testing, and maintenance, responsibility for ..... 10.2.2.1 to 10.2.2.3, A.10.2.2.1
Proprietary supervising station systems, protected property 8.4.2.2
Owner's manuals, fire alarm systems ..... 4.5.2.3(1), A.4.5.2.3(1)

-P-

Paging systems 6.9.10.3, E.3.2
Definition 3.3.124
Parallel telephone systems (definition) 3.3.125
Partial coverage, heat/smoke detectors 5.5.2.2, A.5.5.2.2
Partitions 5.7.3.8, A.5.7.3.8
Paths (pathways)
Definition 3.3.126
Signaling ..... 6.4.3, 6.8.2.4.1, A.6.4.3.2; *see also* Circuits
Peaked ceiling types .....*see* Sloping peaked-type ceiling
Performance-based design
Fire detector spacing ..... Annex B

--`,,```,,,,````-`-`,,`,,`,`,,`---

Copyright National Fire Protection Association
Provided by IHS under license with NFPA
No reproduction or networking permitted without license from IHS

Not for Resale

Initiating devices 5.3, A.5.3
Mass notification systems E.2.2
Visible notification appliances 7.5.4.5, A.7.5.4.5
Permanent records
System information 10.6.1, A.10.6.1
Visual record (recording) 9.5.1.2.2, 9.5.4.1.1
Definition 3.3.127
Personnel
Central station ..... 8.3.6.2, Table A.8.1
Mass notification systems, installation and operation of E.2.1, E.2.2
One-way private radio alarm system, power failure in 8.6.3.5.3.4
Proprietary supervising station ..... 8.4.2.1, 8.4.4.6, Table A.8.1
Public fire alarm reporting systems, installation and operation of 9.3.7
Remote supervising station systems ..... 8.5.3.5, Table A.8.1
System designer ..... 4.3.2, 9.3.7.1, A.4.3.2.2(2), E.2.1.2
System installer ..... 4.3.3, 9.3.7.2, A.4.3.3(2), E.2.1.1 to E.2.1.3
Photoelectric light obscuration smoke detection ... A.5.16.4.2; *see also* Projected beam-type detectors
Definition 3.3.181.3, A.3.3.181.3
Photoelectric light-scattering smoke detection ..... A.5.16.4.2; *see also* Spot-type detectors
Definition 3.3.181.4, A.3.3.181.4
Placarded A.8.3.4
Plant 8.6.3.6.2
Definition 3.3.130
Plenums, detectors in 5.7.4.2, 5.7.5.3.4, A.5.7.4.2.2
Pneumatic rate-of-rise tubing heat detectors 4.4.7.1.11, 5.6.5.5.1
Definition 3.3.43.14, A.3.3.43.18
Poles, leads down 9.7.1.5
Positive alarm sequence 6.8.1.3, 6.9.4, A.6.8.1.3.4
Definition 3.3.131
Power supplies .... 4.4.1, A.4.4.1.5.1 to A.4.4.1.8.3.4; *see also* Batteries
Central station alarm systems 8.3.6.1.4
Common-current systems, grounded 9.5.2.3
Constant-current systems 9.5.2.2
Continuity 4.4.1.6, A.4.4.1.6
Definition 3.3.132
Elevator power shutdown warning 6.16.3.12.4
Engine-driven generators .....*see* Engine-driven generators
Inspection ..... Table 10.3.1
Low-power radio (wireless) systems 6.17.2
Mass notification systems E.2.3.1, E.2.3.17.3
Monitoring 4.4.7.3, A.4.4.7.3.2, A.4.4.7.3.3, E.2.3.17.3
Public fire alarm reporting systems .....*see* Public fire alarm reporting systems
Remotely located
Control equipment 4.4.1.7
Supervising station systems 8.5.3.2
Secondary (standby) .....*see* Secondary (standby) power supply
Smoke alarms 11.6.1, 11.6.6, 11.6.7
Testing ..... Table 10.4.2.2, Table 10.4.4
Presignal feature 6.8.1.2, A.6.8.1.2
Pressure supervisory signal-initiating devices 5.15.2
Pressure switches ..... Table 10.4.2.2
Primary batteries (dry cell) 6.17.2, 11.6.1
Definition 3.3.133
Primary trunk facility 8.6.2.5.1, 8.6.2.6.1, 8.6.2.6.2, 8.6.3.1.2.1, 8.6.3.1.6.1
Definition 3.3.134
Prime contractor 8.3.4, A.8.3.4
Definition 3.3.135
Private operating mode .....*see* Operating mode
Private radio signaling ..... 8.5.3.4(3), 8.6.3.1.2, A.8.6.3.1.2
Definition 3.3.137
Private radio systems .....*see* Microwave radio systems, private; One-way private radio alarm systems
Projected beam–type detectors
Definition 3.3.43.15
Spacing 5.7.3.4, 5.7.5.3.3, A.5.7.3.4
Test methods ..... Table 10.4.2.2
Property
Contiguous property 8.4.2.2
Definition 3.3.138.1
Noncontiguous 8.4.2.2
Definition 3.3.138.2
Proprietary supervising station A.4.4.3.5.8.4
Definition 3.3.194.2
Emergency lighting 8.4.3.4
Equipment 8.4.4, A.8.4.4.3
Facilities 8.4.3
Protected premises fire alarm systems 6.13.1
Proprietary supervising station fire alarm systems ..... 8.4, A.8.4.2.4 to A.8.4.5.5
Communications and transmission channels 8.4.5.1
Definition 3.3.67.7.2
Dispositions of signals 8.4.5.6
Guard's tour delinquency 8.4.5.6.2
Operations 8.4.5, A.8.4.5.4, A.8.4.5.5
Performance criteria ..... Table A.8.1
Personnel 8.4.2.1, 8.4.4.6
Record keeping and reporting 8.4.6
Supervisory signals 8.4.5.6.3
Testing and maintenance 8.4.7
Trouble signals 8.4.5.6.4
Proprietary supervising station service ..... 8.4, A.8.4.2.4 to A.8.4.5.5
Definition 3.3.195.2
Protected premises (local) control unit ...*see* Fire alarm control units
Protected premises (local) fire alarm systems ..... Chap. 6
Actuation time 6.8.1.1, A.6.8.1.1
Annunciation, signal 6.8.1.1, 6.11, A.6.8.1.1, A.6.11.2
Combination systems ..... 6.3.3.1(11), 6.8.2.1, 6.8.4, A.6.8.4.1 to A.6.8.4.11
Dedicated function systems 6.3.3.2
Definition 3.3.67.5.2
Definition 3.3.67.5, 3.3.142, A.3.3.67.5
Dwelling unit fire-warning equipment interconnected 6.8.3
Emergency voice/alarm communications 6.9, A.6.9
End-to-end communication time 8.6.4.7
Fire safety functions .....*see* Fire safety functions
Initiating device circuits 6.5, A.6.5
Inputs ..... 6.8.5, A.6.8.5.1.2 to A.6.8.5.6.2
Installation and design 6.4.1
Integrity ..... 6.3.3.1(12), 6.4, A.6.4.2 to A.6.4.3.2
Low-power radio system requirements 6.17, A.6.17
Nonrequired systems 6.2.3, A.6.2.3
Notification appliance circuits 6.7
One-way private radio alarm systems, supervision of 8.6.3.5.3.2
Performance ..... 6.4 to 6.7, A.6.4.3.2 to A.6.6, Table A.8.1
Positive alarm sequence 6.8.1.3, A.6.8.1.3.4
Presignal feature 6.8.1.2, A.6.8.1.2
Releasing system ..... 6.3.3.1(4), 6.12.5, 6.12.7, 6.12.9, A.6.12.7
Definition 3.3.67.5.3
Requirements ..... 6.3, 6.8, A.6.3.3.2, A.6.8.1.1 to A.6.8.6.5.3
Signaling line circuits 6.6, A.6.6
Supervising station, communications with ...*see* Supervising station fire alarm systems
Suppression systems
Actuation 6.12, A.6.12.7
Signal initiation 6.8.5.7, 6.8.5.8, 6.8.5.10
Trouble signals 4.4.3.5.8.4, A.4.4.3.5.8.4
Public fire alarm reporting systems ..... Chap. 9; *see also* Fire alarm boxes
Auxiliary systems ..... 9.4.3, A.9.4.3.2.2.1(1) to (2)(g)
Cable plant, public 9.7, A.9.7.1.6.2
Coded systems .....*see* Coded
Definition 3.3.67.6
Management/maintenance ..... 9.2.1, 9.3, A.9.2.1, A.9.3.7.4.1(2)
Metallic systems and interconnections 9.7.1, A.9.7.1.6.2
Power supplies ..... 9.4.2.3.8 to 9.4.2.3.12, 9.5.1.5, 9.5.3.3, 9.6.3, 9.6.6, 9.6.7, A.9.5.1.5.1(1) to (3)
Receiving equipment ..... 9.5, A.9.5.1.5.1(1) to A.9.5.3.4.3
Supervisory signals 9.5.1.2.2

Copyright National Fire Protection Association
Provided by IHS under license with NFPA
No reproduction or networking permitted without license from IHS
Not for Resale

System integrity 9.5.1.3
Telephone reporting systems
Series 9.5.4
Street boxes 9.4.2.4
Testing ..... Table 10.4.2.2, Table 10.4.4, 10.4.10
Transmission means ..... 9.4, 9.7.2, A.9.4.1.4 to A.9.4.3.2.2.1(2); *see also* Fire alarm boxes
Trouble signals 9.5.1.2.2, 9.5.1.4
Type A 9.5.1.1, 9.5.2.1.6.1
Definition 3.3.67.6.1
Type B 9.5.1.1, 9.5.2.1.1, 9.5.2.1.6.2, 9.5.3.1.2
Definition 3.3.67.6.2
Public fire service communications center
Alarm receiving equipment ..... 9.5, A.9.5.1.5.1(1) to A.9.5.3.4.3
Circuit protection 9.7.3, A.9.7.3
Definition 3.3.146
Fire alarm boxes, transmission from .....*see* Fire alarm boxes
Indicator of signal transmitted to 9.4.1.4, A.9.4.1.4
Power supply messages, transmission of 9.4.2.3.9.5, 9.4.2.3.9.6, 9.4.2.3.10.4, 9.4.2.3.10.5, 9.4.2.3.12.2
Remote supervising stations, transmission from 8.5.2.1.1
Retransmission to ..... 8.2.1, 8.3.6.1.6, 8.4.5.3 to 8.4.5.5, 8.5.3.4, 8.5.4.1, A.8.3.6.1.6, A.8.4.5.4, A.8.4.5.5
Publicly accessible fire service boxes .....*see* Fire alarm boxes
Public operating mode .....*see* Operating mode
Public switched telephone network ..... 8.6.2.4.1(3), 8.6.3.1.2.2, 8.6.3.1.4, 8.6.3.2.1.1, 8.6.3.2.1.5(3), A.8.6.3.2.1.1
Definition 3.3.200.1
Purpose of code 1.2, A.1.2

-R-

Radiant energy–sensing fire detectors ..... 5.8, A.5.8.1 to 5.8.5.4, B.5
Definition 3.3.43.16
Inspection ..... Table 10.3.1
Testing ..... Table 10.4.2.2, Table 10.4.4
Radio alarm repeater station receiver (RARSR) 8.6.2.5.2, 8.6.3.5.1
Definition 3.3.148
Inspection ..... Table 10.3.1
Testing ..... Table 10.4.2.2, Table 10.4.4
Radio alarm supervising station receiver (RASSR) 8.6.3.5.4.2, 8.6.3.5.5
Definition 3.3.149
Inspection ..... Table 10.3.1
Testing ..... Table 10.4.2.2, Table 10.4.4
Radio alarm system (RAS) ..... 8.6.2.4.1 to 8.6.2.4.3, 8.6.3.2.1.4, A.8.6.3.2.1.4(A); *see also* Digital alarm radio system (DARS); Microwave radio systems, private; One-way private radio alarm systems; Two-way radio frequency (RF) multiplex systems
Box alarms 9.5.3.2
Coded radio receiving systems 9.5.3, A.9.5.3.1.1.1, A.9.5.3.4.3
Definition 3.3.150
In-building emergency radio communication systems, inspection and testing of 10.4.11, A.10.4.11
Low-power radio system requirements .....*see* Low-power radio transmitters
Proprietary supervising station, use by ..... 8.4.5.6.2(1)
Remote supervising station system ..... 8.5.3.4(3)
Two-way in-building radio communication enhancement 6.10.2, A.6.10.2
Radio alarm transmitter (RAT) ..... 8.6.2.4.3, 8.6.2.5.2, 8.6.3.5.1, 8.6.3.5.2(3), 8.6.3.5.4.1, 8.6.3.5.4.5
Definition 3.3.151
Inspection ..... Table 10.3.1
Testing ..... Table 10.4.2.2, Table 10.4.4
Radio channels 9.5.3.2
Definition 3.3.30.3, A.3.3.30.3
Raised floors 5.7.3.2.2, 5.7.3.7, A.5.7.3.2.2
RARSR .....*see* Radio alarm repeater station receiver (RARSR)
RAS .....*see* Radio alarm system (RAS)
RASSR .....*see* Radio alarm supervising station receiver (RASSR)
RAT .....*see* Radio alarm transmitter (RAT)
Rate compensation detectors 5.6.4, A.5.6.4, B.3.3.10
Definition 3.3.43.17, A.3.3.43.17
Testing ..... Table 10.4.2.2
Rate-of-rise detectors 11.7.3.1
Definition 3.3.43.18, A.3.3.43.18
Spacing B.3.3.9
Testing ..... Table 10.4.2.2
Rate-of-rise tubing heat detectors, pneumatic ... 4.4.7.1.11, 5.6.5.5.1
Definition 3.3.43.14, A.3.3.43.18
Receiver/control output signals 6.17.5
Record drawings ..... 4.5.2.3(2)
Definition 3.3.155
Records ..... 4.5, A.4.5.1.1 to A.4.5.2.4
Coded radio reporting system 9.5.3.1.2.2, 9.5.3.1.3
Of completion ..... 4.5.1.3, 4.5.2, Fig. 4.5.2.1, 6.8.5.4.1(4), A.4.5.1.3, A.4.5.2.1
Definition 3.3.156
Guard's tour 6.14.3
Impairments 4.6.2
Masked thresholds, exceeding 7.4.5.4
Mass notification systems E.2.4, E.2.6
Permanent 10.6.1, A.10.6.1
Proprietary supervising stations ..... 8.4.4.2.2, 8.4.6, Table A.8.1
Protected premises fire alarm systems ..... Table A.8.1
Public fire alarm reporting system circuits 9.3.5
Remote supervising station systems ..... 8.5.5, Table A.8.1
Simulated operation note 10.6.4
Supervising stations ..... 8.6.5, 10.6.3, A.8.6.5.1 to A.8.6.5.3
Central station service, indication of .. 8.3.4.1 to 8.3.4.4, A.8.3.4
Signals ..... 8.3.7.5.1, 8.3.8, Table A.8.1
Telephone reporting system ..... 9.5.4.1 to 9.5.4.5
Testing, inspection, and maintenance ... 10.2.4, 10.6.2, A.10.6.2.3
Test signals 8.3.7.5.1
Visual recording devices .....*see* Visual recording devices
Voice recordings ..... 9.5.4.1 to 9.5.4.5
Rectifiers ..... 9.5.1.5.1 to 9.5.1.5.4, 9.5.1.6, A.9.5.1.5.1(1) to (3)
Redundant communication paths ..... Table A.8.6.1
References ..... Chap. 2, Annex G
Release devices and service, suppression system ....*see* Extinguishing systems
Release service, door .....*see* Door release service
Relocation 6.8.6.1, 6.8.6.5.2, 6.9.10, A.6.2.1, A.6.9.10
Definition 3.3.157
Positive alarm sequence, use of ..... 6.8.1.3.1 to 6.8.1.3.3
Remote annunciators
Inspection ..... Table 10.3.1
Testing ..... Table 10.4.2.2, Table 10.4.4
Remote receiving equipment 9.6
Remote supervising station 8.5.1.2, 8.5.1.3
Definition 3.3.194.3
Remote supervising station fire alarm systems ..... 4.4.3.5.6(3), 8.5, A.8.5.2
Definition 3.3.67.7.3
Operations 8.5.4
Performance criteria ..... Table A.8.1
Power supply 4.4.1.7
Remote supervising station service 8.5, A.8.5.2
Definition 3.3.195.3
Repeater station ..... 8.6.3.2.3.3(B)
Definition 3.3.161
Reporting .....*see* Records
Reset ..... 6.8.2.7, 8.6.3.2.1.3(C)
Definition 3.3.162
Residential board and care occupancies ..... 11.5.1.1, A.11.5.1.1; *see also* Household fire alarm systems
Definition 3.3.163
Residential occupancies ..... A.11.5.1.1; *see also* Household fire alarm systems
Definition 3.3.164

Copyright National Fire Protection Association
Provided by IHS under license with NFPA
No reproduction or networking permitted without license from IHS
Not for Resale

Restorable initiating device
Definition 3.3.89.4
Testing ..... Table 10.4.2.2
Retransmission ..... *see* Transmission means
Retroactivity of code 1.4
Return air system 5.16.4.2.2, 5.16.5.7, A.5.16.4.2.2
Rooming house ..... *see* Lodging or rooming houses
Room temperature supervisory signal-initiating devices 5.15.5
Runner ..... 8.3.7.1.2(2), 8.3.7.2.1(2), 8.3.7.3(2), 8.4.4.6.1, 8.4.4.6.2, 8.4.5.6.1(2), 8.4.5.6.2(2)
Definition 3.3.166
Runner service ..... 8.3.2(6), 8.3.3, Table A.8.1
Definition 3.3.167

-S-

Scanner (definition) 3.3.168
Scope of Code 1.1
Secondary (standby) power supply 4.4.1.5, A.4.4.1.5.1, A.4.4.1.5.3
Amplifiers, power load of 4.4.7.2.1.2
Continuity of power supply 4.4.1.6, A.4.4.1.6
Door unlocking devices 6.16.7.3, A.6.16.7.3
Emergency voice/alarm equipment 6.9.9
Failure of 6.13.3
Household fire alarm systems 11.6.1, 11.6.2, 11.6.4, 11.6.8
Mass notification systems E.2.3.1.8
Monitoring integrity of 4.4.7.3.1
Testing ..... Table 10.4.2.2
Secondary trunk facility (definition) 3.3.169
Selective coverage, heat/smoke detectors 5.5.2.2, A.5.5.2.3
Self-rescue 11.4.1
Sensitivity 5.7.2, 10.4.4.2, A.5.7.2, A.10.4.4.2
Separate sleeping area (definition) 3.3.170
Service personnel, qualifications and experience 9.3.7.3, 10.2.2.5, A.10.2.2.5
Service provider diversity 8.6.4.13
Shall (definition) 3.2.6
Shapes of ceilings (definition) ..... 3.3.171; *see also* Sloping ceilings; Sloping peaked-type ceiling; Sloping shed-type ceiling; Smooth ceilings
Shed ceiling types ..... *see* Sloping shed-type ceiling
Should (definition) 3.2.7
Shunt-type auxiliary fire alarm system ..... 9.4.3.2.2.1(2), 9.4.3.2.2.2, 9.4.3.2.2.3, 9.4.3.2.3.1, A.9.4.3.2.2.1(2)
Definition 3.3.67.1.2
Signal (definition) ..... 3.3.172; *see also* Alarm signals
Signaling line circuit interface ..... *see also* Interface equipment
Definition 3.3.174
Testing ..... Table 10.4.2.2, 10.4.4.3
Signaling line circuits 4.4.7.1.1, 6.4.2, 6.4.3, 6.8.2.4, 9.7.2, A.6.4.2, A.6.4.3.2, C.1
Definition 3.3.173
Mass notification systems E.2.3.17.1
Performance/capabilities of ..... 6.6, Table 6.6.1, A.6.6
Signaling paths 6.4.3, 6.8.2.4.1, A.6.4.3.2
Signaling systems ..... *see* Fire alarm systems
Signal priority 8.6.4.11, A.8.6.4.11
Signal transmission sequence 8.6.3.2.1.5
Definition 3.3.175
Single dwelling unit (definition) ..... 3.3.54.2; *see also* One- and two-family dwellings
Single station alarm ..... 5.1.4, Chap. 11
Combination systems 11.7.6.7
Definition 3.3.176
One- and two-family dwelling units 10.4.5, 10.4.7, 11.5.1.1, A.11.5.1.1
Testing 11.7.4
Single station alarm devices
Definition 3.3.177
Listed 11.3.1
Site-specific software (definition) 3.3.178
SI units 1.6, A.1.6.4
Sleeping areas/rooms 11.5.1.1, 11.5.1.2, A.11.5.1, A.11.5.1.1
Audible appliances in 7.4.4, A.7.4.4.1
One- and two-family dwelling units 11.5.1.1, A.11.5.1.1
Visible notification appliances located in 7.5.4.6, A.7.5.4.6.2
Sloping ceilings 11.8.3.2, 11.8.3.3, 11.8.4.2, A.11.8.3.2, A.11.8.3.3
Definition 3.3.22.2
Detector spacing 5.6.5.4, 5.7.3.2.4.3, 5.7.3.2.4.4, 5.7.3.4.5, 11.5.1.3.2, A.5.6.5.4.1, A.5.6.5.4.2, A.5.7.3.2.4.3
Sloping peaked-type ceiling 5.6.5.4.1, 5.7.3.5, 11.8.3.2, 11.8.4.2, A.5.6.5.4.1
Definition 3.3.22.3, A.3.3.22.3
Sloping shed-type ceiling 5.6.5.4.2, 5.7.3.6, A.5.6.5.4.2
Definition 3.3.22.4, A.3.3.22.4
Smoke alarms ..... 11.1.2, 11.5, A.11.1.2, A.11.5.1 to A.11.5.2.2
Definition 3.3.180
Installation 11.3.3, 11.5.1.3, 11.8.3, A.11.3.3, A.11.5.1.3.1, A.11.8.3
Interconnection of 11.8.2.2, A.11.8.2.2
One- and two-family dwelling units 11.5.1, A.11.5.1
Performance of 11.7.2, A.11.7.2
Power supplies, household fire alarm systems 11.6.1, 11.6.6, 11.6.7
Testing 11.7.4
Smoke control systems ..... 5.16, 6.16.5.4 to 6.16.5.6, A.5.16
Smoke detectors ..... 5.5, 5.7, A.5.5.2, A.5.7.1.1 to A.5.7.6.4; *see also* Multiple-station alarms; Single-station alarms
Aerosols and particulate matter, effect of ..... A.5.7.1.9, Table A.5.7.1.9(a)
Air duct systems 5.16.2.1, 5.16.3.1, 5.16.3.4, 5.16.4.2, 5.16.5, 6.16.5.3, A.5.16.1, A.5.16.2, A.5.16.4.2, A.5.16.5.2, A.6.16.5.3
Alarm verification features ..... *see* Alarm verification features
Area 5.16.4.1
Characteristics B.4.7
Circuits C.1
Cloud chamber smoke detection (definition) 3.3.181.1
Coverage 5.5.2, A.5.5.2
Definition 3.3.43.19
Design ..... 5.7.1.1 to 5.7.1.3, 5.7.1.8, A.5.7.1.1 to A.5.7.1.3, A.5.7.1.8
Door release service 5.16.3.3, 5.16.6, A.5.16.6.5.1.3
Ducts, detectors in ..... *see* Ducts, detectors in
Electrical and mechanized factors, influences of ..... A.5.7.1.9, Table A.5.7.1.9(b)
Elevators ..... 6.16.3, A.6.16.3.1 to A.6.16.3.12.3
Fire alarm control units, protection of 4.4.5, A.4.4.5
Heating, ventilating, and air conditioning (HVAC) 5.7.4, A.5.7.4.1, A.5.7.4.2.2
Inspection ..... Table 10.3.1
Installation ..... 5.7.1.4 to 5.7.1.11, 11.3.3, 11.4.3, 11.8.3, A.11.3.3, A.11.4.3, A.11.8.3
One- and two-family dwelling units 11.5.1.1, A.11.5.1.1
Integrity, monitoring for 11.7.5.6
Location ..... 5.7.1.4, 5.7.1.6, 5.7.1.7, 5.7.1.9, 5.7.3, 5.7.5.3.2, 11.3.3, 11.8.3.1 to 11.8.3.5, A.5.7.1.9, A.5.7.3.1 to A.5.7.3.8, A.11.3.3, A.11.8.3.3 to A.11.8.3.5(10)
One- and two-family dwellings, replacement in ... 10.4.5 to 10.4.7
Performance of 11.7.1, 11.7.2, A.11.7.2
Protected premises alarm systems 6.8.5.4, A.6.8.5.4.1
Response characteristics B.4.2
Response prediction methods B.4.8
Self-diagnostic 11.7.1
Sensitivity 5.7.2, 10.4.4.2, A.5.7.2, A.10.4.4.2
Smoke spread control 5.16, A.5.16
Spacing ..... 5.7.3, 5.7.5.3.3, Table 5.7.5.3.3, 6.8.5.4.4, A.5.7.3.1 to A.5.7.3.8, A.5.7.5.3.3, B.4
Special considerations ..... 5.7.5, A.5.7.5.1.2 to A.5.7.5.3.3
Testing ..... Table 10.4.2.2, Table 10.4.4, C.2.3, C.2.4, C.2.7, C.2.8
Circuits C.1
Video image smoke detection .... *see* Video image smoke detection (VISD)
Smoke doors 6.16.5.2, A.6.16.5.3

--`,,```,,,,````-`-`,,`,,`,`,,`---
Copyright National Fire Protection Association
Provided by IHS under license with NFPA
No reproduction or networking permitted without license from IHS
Not for Resale

Smooth ceilings
Definition 3.3.24.3, A.3.3.24.3
Detector spacing 5.6.5.1, 5.7.3.2.3, 11.8.4.1, A.5.6.5.1, A.5.7.3.2.3.1, A.5.7.3.2.3.5
Software control 6.2.2, A.6.2.2.2
Solid joist construction (ceiling)
Definition 3.3.24.4
Detector spacing 5.6.3.1.1, 5.6.3.2.1, 5.6.5.2, 5.7.3.2.4, 11.8.4.4, 11.8.4.5, A.5.6.5.2, A.5.7.3.2.4, A.11.8.4.5
Spacing ..... Annex B
Definition 3.3.185
Heat detectors .... 5.6.5, Table 5.6.5.5.1, A.5.6.5, A.5.6.5.5.1, B.3.3
Smoke detectors ..... 5.7.3, 5.7.5.3.3, Table 5.7.5.3.3, 6.8.5.4.4, A.5.7.3.1 to A.5.7.3.8, A.5.7.5.3.3, B.4
Visible notification appliances 7.5.4.1, 7.5.4.4, A.7.5.4.1, A.7.5.4.4
Spark detectors ..... 5.8, A.5.8.1 to 5.8.5.4
Definition 3.3.43.20
Spacing ..... 5.8.3.3, A.5.8.3.3.1 to A.5.8.3.3.6
System design B.5.3
Spark detector sensitivity B.5.3.3, B.5.3.4.1
Definition 3.3.188
Sparks B.5.3.1.3
Definition 3.3.186, A.3.3.186
Speaker amplifiers, monitoring of 4.4.7.2.1, A.4.4.7.2.1, E.2.3.17.2
Speakers 6.8.4.5, 6.8.4.6, 6.9.7, 6.9.10.3, 7.8.1, A.6.9.7, A.7.8.1.2, C.1
Special hazard equipment, testing of .... Table 10.4.2.2, Table 10.4.4
Spot-type detectors ..... 5.7.3.2.4.2, A.5.7.3.2.4.2(3), A.5.7.3.2.4.2(4)
Definition 3.3.43.21, A.3.3.43.18
Heat-sensing 10.4.4.4
Location 5.6.3.1
Operating temperature/RTI information 5.6.1.4
Response time index (RTI), marking of 5.6.2.3
Smoke 5.7.3.2, 5.7.5.1, A.5.7.3.2, A.5.7.5.1.2
Testing ..... Table 10.4.2.2
Sprinkler systems ...*see also* Extinguishing systems; Waterflow alarms
Elevators, use in ..... 6.16.4.1 to 6.16.4.3, 6.16.4.6, A.6.16.4.1, A.6.16.4.6
Fire command control equipment, survivability of ..... 6.9.10.4.3(5)
Supervision C.2.14
Stair enclosures, notification appliances in 6.8.6.2, A.6.8.6.2
Status indicators 4.4.3.4, A.4.4.3.4.2, E.2.3.4
Storage batteries .....*see* Batteries
Story (definition) 3.3.190
Stratification 5.7.1.10, 5.7.3.4.2, A.5.7.1.10, B.4.6
Definition 3.3.191
Street boxes .....*see* Fire alarm boxes
Subscriber (definition) 3.3.192
Subsequent alarms, recording and display of 8.6.4.9
Subsidiary station 8.4.3.5
Definition 3.3.193
Supervising station ..... 4.4.3.2.3(3), 4.5.2.4.1, 6.16.5.3, A.6.16.5.3, Table A.8.1
Alarm signal disposition 8.2.1
Change of service 8.2.3, A.8.2.3
Definition 3.3.194
End-to-end communication time 8.6.4.7
Household fire alarm systems 11.7.8, A.11.7.8.2
One-way private radio alarm systems 8.6.3.5.3
Protected premises fire alarm systems 6.13
Recording and display of subsequent alarms 8.6.4.9
Records 10.6.3
Trouble signals transmitted to 6.13.2, 6.13.3
Two-way radio frequency multiplex systems 8.6.3.4.2
Supervising station fire alarm systems ..... Chap. 8
Central station fire alarm systems .....*see* Central station fire alarm systems
Communications with protected premises ..... 8.6, Table A.8.6.1, A.8.6.1 to A.8.6.5.3
Digital communicator systems .....*see* Digital alarm communicator system (DACS)
Display ..... 8.6.5, A.8.6.5.1 to A.8.6.5.3
Performance criteria 8.1, A.8.1
Power failure signals, transmission of 4.4.7.3.3, A.4.4.7.3.3
Process monitoring ..... 6.3.3.1(9)
Proprietary .....*see* Proprietary supervising station fire alarm systems
Public alarm reporting systems .....*see* Public fire alarm reporting systems
Recording ..... 8.6.5, A.8.6.5.1 to A.8.6.5.3
Remote 6.13.1, 8.5, A.8.5.2
Spare equipment 8.6.4.5
Testing and maintenance ..... 8.6.6, Table 10.4.2.2
Supervising station service .....*see* Central station service; Proprietary supervising station service; Remote supervising station service
Supervisory service
Definition 3.3.196
Guard's tour ..... 6.3.3.1(8), 6.14, 6.15
One-way private radio alarm systems 8.6.3.5.3
Supervisory signal-initiating devices 5.15
Definition 3.3.89.5
Extinguishing systems .....*see* Extinguishing systems
Inspection ..... Table 10.3.1
Testing ..... Table 10.4.2.2, Table 10.4.4, C.2.1, C.2.2, C.2.11 to C.2.14
Supervisory signals ..... 4.4.3.2, 8.6.3.6.1.1; *see also* Alarm signals; Guard's tour supervisory signal
Annunciation 4.4.6.2, 6.11.1
Central station response 8.3.7.3, A.8.3.7.3
Coded 4.4.3.2.1, 4.4.3.2.2, 9.5.3.1.3
Definition 3.3.172.6
Distinctive signals ..... 4.4.3.3, 4.4.3.6.2, A.4.4.3.6.2(2)
Ducts, detectors in 6.16.5.3, A.6.16.5.3
Elevator recall 6.16.3.10
Identification of ..... 8.6.5.1(1)
Initiation ..... 6.8.5.8 to 6.8.5.10
Inspections ..... Table 10.3.1
Latching indication 4.4.3.2.4
Low-power radio (wireless) systems 6.17.4.5
Mass notification systems E.2.3.3, E.2.3.6
Proprietary supervising station systems 8.4.4.2.1.2, 8.4.4.2.1.3, 8.4.4.2.2.3, 8.4.4.4, 8.4.5.6.3
Public fire alarm reporting systems 9.5.1.2.2
Remote supervising station system 8.5.1.4, 8.5.2.1, 8.5.3.1.2, 8.5.4.2, A.8.5.2.1.2
Self-restoring indication 4.4.3.2.3
Silencing 4.4.3.8
Testing frequency ..... Table 10.4.4
Supervisory switches 8.6.3.3.3.5, C.2.14, C.2.15
Supplementary
Definition 3.3.199
Mass notification systems, functions of E.3.2
Supply air system 5.16.4.2.1
Suppressed (exception reporting) signal system ..... 6.15, 8.6.3.2.2.2(D)
Suppression systems .....*see* Extinguishing systems
Suspended ceilings 5.7.3.7
Switched telephone network ..... 8.5.3.4(1); *see also* Public switched telephone network
Definition 3.3.200
System interfaces .....*see* Interface equipment
System unit ..... 8.6.3.1.1, 8.6.3.1.5(3), 8.6.3.4.1(3)
Definition 3.3.201
Loading capacity 8.6.4.6
Spare equipment 8.6.4.5

-T-

Tactile notification appliance 7.10.2, A.7.10.2
Definition 3.3.113.2
Manual non-fire emergency boxes E.2.3.13.2
Mass notification systems E.1.1, E.2.3.13.2, E.3.6.5

Copyright National Fire Protection Association
Provided by IHS under license with NFPA
No reproduction or networking permitted without license from IHS
Not for Resale

Tampering A.6.8.4.5
Telephones ....*see also* Digital alarm communicator receiver (DACR); Switched telephone network
Call forwarding equipment ..... 8.6.3.2.1.5(7), A.8.6.3.2.1.5(7)
Cellular ..... 8.6.3.2.1.4, A.8.6.3.2.1.4(A)
Central station service A.8.3.6.1.6
Digital alarm communicator systems, use of ..... 8.6.3.2.1.4, 8.6.3.2.1.5, 8.6.3.2.2.2, A.8.6.3.2.1.4(A), A.8.6.3.2.1.5(7), A.8.6.3.2.2.2(A) to (F)
One-way (outgoing only) ..... 8.5.3.4(2)
Proprietary supervising station ..... 8.4.5.6.2(1)
Remote supervising station 8.5.3.4
Series reporting systems 9.5.4
Testing ..... Table 10.4.2.2
Textual appliances 7.8.2
Two-way telephone communications service ..... 4.4.7.2.2, 6.10, A.6.10.1.6 to A.6.10.2
Telephone street boxes 9.4.2.4
Temperature variation ..... 4.4.4.1, A.4.4.4.1(1), E.2.3.8
Terrorism, mass notification systems design for E.1.3, E.2.2
Testing ..... Chap. 10, Table A.8.1
Central station service 8.3.9
Circuits ..... 10.4.9, Annex C
Extinguishing system release .....*see* Extinguishing systems
Form ..... Fig. 10.6.2.3
Frequency 10.4.4, A.10.4.4
Household fire alarm systems 10.4.6.1, 11.4.3, 11.7.4, A.11.4.3
Mass notification systems E.2.6
Methods ..... 10.4.2, Table 10.4.2.2, A.10.4.2.1, A.10.4.2.2
Proprietary supervising station alarm systems 8.4.7
Public fire alarm reporting systems 9.3.3, 9.3.6
Records 10.6.2, A.10.6.2.3
Remote supervising station systems 8.5.1.2, 8.5.1.3, 8.5.5.2, 8.5.6
Smoke detectors 11.10
Supervising station fire alarm systems ..... 8.6.6, Table A.8.6.1
System acceptance ..... 10.4, A.10.4.1.2 to A.10.4.11
Reacceptance testing 10.4.1.2, A.10.4.1.2
Test signals 8.3.7.5, 9.5.1.2.2, 9.5.3.1.1.6, A.8.3.7.5.3
Textual audible notification appliances 7.8, A.7.8.1.2
Definition 3.3.113.1.2
Textual visible notification appliances 7.9, A.7.9
Definition 3.3.113.3.1
Mass notification systems E.1.1, E.3.6.4
Throughput probability ..... 8.6.4.14, Table A.8.6.1
Time Constant and Response Time Index (RTI) B.3.2.5
Tone generator ..... 6.9.5; *see also* Alert tone
Definition 3.3.65
Monitoring of 4.4.7.2.1, 6.9.8, A.4.4.7.2.1, E.2.3.17.2
Testing ..... Table 10.4.2.2
Total coverage, heat/smoke detectors 5.5.2.1
Transient protection 4.4.4.3, E.2.3.10
Transient suppressors ..... Table 10.3.1, Table 10.4.2.2
Transmission channels 4.4.7.1.13, 8.6.1, A.8.6.1
Active multiplex 8.6.3.1.2.2
Definition 3.3.30.4
Digital alarm communicator receiver (DACR) ..... 8.6.3.2.2.2, A.8.6.3.2.2.2(A) to (F)
Digital alarm communicator transmitter (DACT) ..... 8.6.3.2.1.4, A.8.6.3.2.1.4(A)
McCulloh systems ... 8.6.3.3.2, A.8.6.3.3.2.7(3), A.8.6.3.3.2.8(4)(c)
One-way private radio alarm systems 8.6.3.5.4
Other technologies 8.6.4, A.8.6.4.11
Proprietary supervising station fire alarm systems 8.4.5.1
Two-way radio frequency (RF) multiplex systems 8.6.3.4.3
Transmission means ..... 8.2.1, 8.6.1, A.8.6.1; *see also* Active multiplex systems
Central station alarm systems ..... 8.3.6.1.5, 8.3.6.1.6, Table A.8.1, A.8.3.6.1.6
Digital alarm communicator transmitter (DACT) ..... 8.6.3.2.1.4, 8.6.3.2.1.5, A.8.6.3.2.1.4(A), A.8.6.3.2.1.5(7)
Household fire alarm systems 11.7.8.1
Proprietary supervising station ..... 8.4.5.1, 8.4.5.3 to 8.4.5.5, Table A.8.1, A.8.4.5.4, A.8.4.5.5
Remote supervising station systems ..... 8.5.3.3, 8.5.3.4, 8.5.4.1, Table A.8.1
Testing ..... Table 10.4.2.2, Table 10.4.4, 10.5.5, 10.5.6
Transmitters ..... 8.6.1, A.8.6.1; *see also* Digital alarm communicator transmitter (DACT); Digital alarm radio transmitter (DART); Radio alarm transmitter (RAT)
Auxiliary ..... 9.4.3.2.3.1 to 9.4.3.2.3.3, 9.4.3.2.3.5, 9.4.3.2.3.13
Definition 3.3.206
Low-power radio ..... 6.17.2 to 6.17.4, A.6.17.3.1
McCulloh systems 8.6.3.3.1, A.8.6.3.3.1.2, A.8.6.3.3.1.4
Transponders A.8.6.3.1.2
Definition 3.3.207
Trouble signals 4.4.3.5, 4.4.7.1.6, 4.4.7.1.17, 4.4.7.2.1, A.4.4.3.5.8.3, A.4.4.3.5.8.4, A.4.4.7.2.1
Alarm signal deactivation, signal for 4.4.3.7.6
Annunciation 4.4.6.2, 6.11.1
Auxiliary systems, public fire alarm reporting systems ..... 9.4.3.2.2.1(1), A.9.4.3.2.2.1(1)
Central station response ..... 8.3.7.4, A.8.3.7.4(1)
Coded radio box systems 9.4.2.3.9.2, 9.5.3.1.3, 9.5.3.4.6, 9.5.3.4.7
Definition 3.3.172.7
Digital alarm communicator systems ..... 8.6.3.2.1.4(B), 8.6.3.2.2.2(G)
Distinctive signals ..... 4.4.3.3, 4.4.3.6.2, A.4.4.3.6.2(2)
Household fire alarm systems 11.6.4, 11.6.6, 11.6.7, 11.7.1, 11.7.5.4
Initiation 6.8.5.11
Inspections ..... Table 10.3.1
Integral, initiating devices with 6.8.5.3.1
Mass notification systems E.2.3.3, E.2.3.5, E.2.3.6
Power failure 4.4.7.3.1
Proprietary supervising station ..... 8.4.4.2.1.2 to 8.4.4.2.1.4, 8.4.4.2.2.3, 8.4.4.5, 8.4.5.6.4
Public fire alarm reporting systems 9.5.1.2.2, 9.5.1.4
Remote supervising station systems 8.5.1.4, 8.5.2.1.1, 8.5.2.2, 8.5.3.1.2, 8.5.3.1.3, 8.5.4.2
Signaling line circuits 6.6.2, A.6.6
Silencing of 4.4.3.5.8, A.4.4.3.5.8.3, A.4.4.3.5.8.4
Supervising station, transmission to 6.13.2, 6.13.3, 8.6.5.1, A.8.6.5.1
Supervisory signal silencing, signal for 4.4.3.8.3
Testing ..... Table 10.4.2.2, Table 10.4.4
Two-way telephone communications ..... 6.10.1.7 to 6.10.1.9
Trunk facility .....*see* Primary trunk facility
Two-way in-building radio communication enhancement 6.10.2, A.6.10.2
Two-way radio frequency (RF) multiplex systems ..... 8.6.2.5.1, 8.6.2.5.3, 8.6.3.2.1.4, 8.6.3.4, Table A.8.6.1, A.8.6.3.2.1.4(A), A.8.6.3.4.4
Classifications, adverse conditions 8.6.3.4.4, A.8.6.3.4.4
Inspection ..... Table 10.3.1
Loading capacities ..... 8.6.3.4.5, Table 8.6.3.4.5
Testing ..... Table 10.4.2.2, Table 10.4.4
Transmission channel 8.6.3.4.3
Two-way telephone communications service ..... 4.4.7.2.2, 6.10, A.6.10.1.6 to A.6.10.2

-U-

Underground cables 9.7.1.2.2, 9.7.1.3
Uninterruptible power supply (UPS) ..... 4.4.1.6.3.1, 4.4.1.6.3.2, 9.6.7, Table 10.4.2.2, A.4.4.1.6
Unique transmitter identifier ..... 8.6.4.8, Table A.8.6.1
Units of measurement 1.6, A.1.6.4

Copyright National Fire Protection Association
Provided by IHS under license with NFPA
No reproduction or networking permitted without license from IHS
Not for Resale

-V-

Valves, supervision of 5.15.1
Video image flame detection (VIFD) 5.8.5, A.5.8.5.3, A.5.8.5.4
Definition 3.3.209, A.3.3.209
Inspection, testing, and maintenance 10.4.3
Video image smoke detection (VISD) 5.7.6, A.5.7.6.3, A.5.7.6.4
Definition 3.3.181.5, A.3.3.181.5
Inspection, testing, and maintenance 10.4.3
Visible notification appliances 7.4.1.1, A.7.4.1.1
Alarm receiving equipment, public fire service communications equipment 9.5.1.2.5, 9.5.1.4.2, 9.5.1.4.4, 9.5.1.5.7, 9.5.2.2.3, 9.5.2.3.2, 9.5.3.4.7
Alarm signal deactivation (silencing) ..... 4.4.3.7.2, 4.4.3.8.2, 4.4.3.8.3, 11.7.5.5(2)
Appliance photometrics 7.5.3, A.7.5.3
Ceiling-mounted ..... 7.5.4.3.1, Table 7.5.4.3.1(b), 7.5.4.3.6, 7.5.4.3.7, A.7.5.4.3.6
Corridor spacing 7.5.4.4, A.7.5.4.4
Definition 3.3.113.3
Distinctive signals ..... 4.4.3.6.2(2), A.4.4.3.6.2(2)
Elevator recall 6.16.3.12.3
Fire command center 4.4.6.5
Household fire alarm systems 11.3.7, 11.3.8
Alarm silence indication ..... 11.7.5.5(2)
Power supplies 11.6.5
Light pulse characteristics 7.5.2, A.7.5.2.4, A.7.5.2.6
Location ..... 7.5.4, 7.9.3, A.7.5.4.1 to A.7.5.4.6.2
Mass notification systems E.1.1, E.2.3.5.1, E.2.3.5.2, E.3.6
Nameplates 7.3.2.1, 7.3.2.3
Performance-based alternative 7.5.4.5, A.7.5.4.5
Private mode 7.6, 7.9.3.1, A.7.6
Public mode 7.4.2.2, 7.4.2.5.2, 7.5, 7.9.3.2, A.7.5
Remote supervising station systems 8.5.1.4, 8.5.1.5, 8.5.3.1, 8.5.3.1.4, 8.5.3.1.5
Supervisory signals 4.4.3.2.3, 4.4.3.2.4, 4.4.3.8.2, 4.4.3.8.3
Testing ..... Table 10.4.2.2, C.2.11, C.2.12
Textual appliances 7.9, A.7.9
Definition 3.3.113.3.1
Trouble signals 4.4.3.5.6, 4.4.3.5.7, E.2.3.5.1, E.2.3.5.2
Wall-mounted appliances ..... 7.5.4, Table 7.5.4.3.1(a), A.7.5.4.1 to A.7.5.4.6.2
Wide-area signaling 7.5.5
Zone indication
Alarm 4.4.6.1
Supervisory and trouble 4.4.6.2
Visible zone indication
Alarm 4.4.6.1
Supervisory and trouple annunciation 4.4.6.2
Visual recording devices 9.5.1.2, 9.5.4.1.1, 9.5.4.2
Permanent record (recording) 9.5.1.2.2, 9.5.4.1.1
Definition 3.3.127
Voice/alarm signaling service 6.9.5, 7.4.1.6, A.7.4.1.6
Voice communications systems ..... 6.8.4.11, 7.4.1.4, A.7.4.1.4; *see also* Emergency voice/alarm communications; Mass notification systems
Voice intelligibility 7.4.1.4, 7.4.1.6, A.7.4.1.4, A.7.4.1.6
Definition 3.3.211, A.3.3.211
Mass notification system E.1.1, E.3.5.1
Voice recordings ..... 9.5.4.1 to 9.5.4.5, E.2.2.4, E.3.5
Voltage, variation of ..... 4.4.4.1, A.4.4.4.1(1)

-W-

Waterflow alarms 5.11, A.5.11.1, A.5.11.2
Auxiliary fire alarm systems, application of ..... Table 9.4.3.2.2.3
Elevator shutdown 6.16.4.3
Inspection ..... Table 10.3.1
Manual fire box, available 6.8.5.1.2
Proprietary supervising station 8.4.4.4
Signal initiation 6.8.5.5, A.6.8.5.5
Testing ..... Table 10.4.2.2, Table 10.4.4, C.2.15
Manual fire box, available A.6.8.5.1.2
Waterflow switches 8.6.3.3.3.4, C.2.15
Water level supervisory signal-initiating devices 5.15.3
Water temperature supervision 5.15.4
WATS (Wide Area Telephone Service) (definition) 3.3.212
Wavelength B.5.1.2
Definition 3.3.213, A.3.3.213
Wide area signaling 7.5.5
Definition 3.3.214
Wireless protection system (definition) 3.3.216
Wireless repeater (definition) 3.3.217
Wireless systems, low power .....*see* Low-power radio transmitters
Wiring ..... 4.4.4.4, 10.8.5, A.4.4.4.4; *see also* Circuits
Diagrams C.2
Mass notification systems E.2.3.11

-Z-

Zones 4.4.6, A.4.4.6.3, A.4.4.6.6
Auxiliary fire alarm systems 9.4.3.2.3.12
Definition 3.3.218
Elevator ..... A.6.16.3.12, Fig. A.6.16.3.12(a)
Evacuation signaling 6.9.6.7, 6.9.10.1, 6.9.10.3, 6.9.10.4.1, A.6.9.10.4.1
Definition 3.3.218.1
Notification 6.8.6.3, 6.8.6.4.1, 6.8.6.4.2, 6.8.6.5.3, A.6.8.6.5.3
Definition 3.3.218.2
Mass notification systems E.2.3.16
Visible zone indication 4.4.6.1, 4.4.6.2, E.2.3.16.1, E.2.3.16.3

Copyright National Fire Protection Association
Provided by IHS under license with NFPA
No reproduction or networking permitted without license from IHS
Not for Resale

2010 *National Fire Alarm Code*® Schedule
(Annual 2009 Cycle)

Event	Date
Proposal Closing Date	November 2, 2007 (5:00 p.m. ET)
Technical Committee Meetings (ROP)	January 14 – 19, 2008
Technical Correlating Committee Meeting (ROP)	April 21 – 23, 2008
Report on Proposals Posted	June 20, 2008
Comment Closing Date	August 29, 2008 (5:00 p.m. ET)
Technical Committee Meetings (ROC)	October 20 – 25, 2008
Technical Correlating Committee Meeting (ROC)	January 5 – 7, 2009
Report on Comments Posted	February 24, 2009
Intent to Make Motion (NITMAM) Closing Date	April 3, 2009 (5:00 p.m. ET)
NITMAMs Posted	May 1, 2009
NFPA World Safety Conference and Exposition™	May 31 – June 3, 2009
Standards Council Issuance	July 31, 2009

Copyright National Fire Protection Association
Provided by IHS under license with NFPA
No reproduction or networking permitted without license from IHS
Not for Resale

Sequence of Events Leading to Issuance of an NFPA Committee Document

Step 1: Call for Proposals

- Proposed new Document or new edition of an existing Document is entered into one of two yearly revision cycles, and a Call for Proposals is published.

Step 2: Report on Proposals (ROP)

- Committee meets to act on Proposals, to develop its own Proposals, and to prepare its Report.
- Committee votes by written ballot on Proposals. If two-thirds approve, Report goes forward. Lacking two-thirds approval, Report returns to Committee.
- Report on Proposals (ROP) is published for public review and comment.

Step 3: Report on Comments (ROC)

- Committee meets to act on Public Comments to develop its own Comments, and to prepare its report.
- Committee votes by written ballot on Comments. If two-thirds approve, Report goes forward. Lacking two-thirds approval, Report returns to Committee.
- Report on Comments (ROC) is published for public review.

Step 4: Technical Report Session

- "*Notices of intent to make a motion"* are filed, are reviewed, and valid motions are certified for presentation at the Technical Report Session. ("Consent Documents" that have no certified motions bypass the Technical Report Session and proceed to the Standards Council for issuance.)
- NFPA membership meets each June at the Annual Meeting Technical Report Session and acts on Technical Committee Reports (ROP and ROC) for Documents with "certified amending motions."
- Committee(s) vote on any amendments to Report approved at NFPA Annual Membership Meeting.

Step 5: Standards Council Issuance

- Notification of intent to file an appeal to the Standards Council on Association action must be filed within 20 days of the NFPA Annual Membership Meeting.
- Standards Council decides, based on all evidence, whether or not to issue Document or to take other action, including hearing any appeals.

Committee Membership Classifications

The following classifications apply to Technical Committee members and represent their principal interest in the activity of the committee.

M *Manufacturer:* A representative of a maker or marketer of a product, assembly, or system, or portion thereof, that is affected by the standard.

U *User:* A representative of an entity that is subject to the provisions of the standard or that voluntarily uses the standard.

I/M *Installer/Maintainer:* A representative of an entity that is in the business of installing or maintaining a product, assembly, or system affected by the standard.

L *Labor:* A labor representative or employee concerned with safety in the workplace.

R/T *Applied Research/Testing Laboratory:* A representative of an independent testing laboratory or independent applied research organization that promulgates and/or enforces standards.

E *Enforcing Authority:* A representative of an agency or an organization that promulgates and/or enforces standards.

I *Insurance:* A representative of an insurance company, broker, agent, bureau, or inspection agency.

C *Consumer:* A person who is, or represents, the ultimate purchaser of a product, system, or service affected by the standard, but who is not included in the *User* classification.

SE *Special Expert:* A person not representing any of the previous classifications, but who has a special expertise in the scope of the standard or portion thereof.

NOTES;
1. "Standard" connotes code, standard, recommended practice, or guide.
2. A representative includes an employee.
3. While these classifications will be used by the Standards Council to achieve a balance for Technical Committees, the Standards Council may determine that new classifications of members or unique interests need representation in order to foster the best possible committee deliberations on any project. In this connection, the Standards Council may make appointments as it deems appropriate in the public interest, such as the classification of "Utilities" in the National Electrical Code Committee.
4. Representatives of subsidiaries of any group are generally considered to have the same classification as the parent organization.

Copyright National Fire Protection Association
Provided by IHS under license with NFPA
No reproduction or networking permitted without license from IHS
Not for Resale

NFPA Technical Committee Document Proposal Form

NOTE: All Proposals must be received by 5:00 p.m. EST/EDST on the published Proposal Closing Date.

For further information on the standards-making process, please contact the Codes and Standards Administration at 617-984-7249.

For technical assistance, please call NFPA at 617-770-3000.

FOR OFFICE USE ONLY

Log #:

Date Rec'd:

Please indicate in which format you wish to receive your ROP/ROC ☐ **electronic** ☐ **paper** ☒ **download**
(Note: If choosing the download option, you must view the ROP/ROC from our website; no copy will be sent to you.)

Date April 1, 200X **Name** John J. Doe **Tel. No.** 716-555-1234

Company Air Canada Pilot's Association

Street Address 123 Summer Street Lane **City** Lewiston **State** NY **Zip** 14092

Please indicate organization represented (if any)

1. (a) NFPA Document Title National Fuel Gas Code **NFPA No. & Year** 54, 200X Edition

(**b) Section/Paragraph** 3.3

2. Proposal Recommends (check one): ☐ new text ☒ revised text ☐ deleted text

3. Proposal (include proposed new or revised wording, or identification of wording to be deleted): [Note: Proposed text should be in legislative format, i.e., use underscore to denote wording to be inserted (inserted wording) and strike-through to denote wording to be deleted (~~deleted wording~~).]

Revise definition of effective ground-fault current path to read:

3.3.78 Effective Ground-Fault Current Path. An intentionally constructed, permanent, low impedance electrically conductive path designed and intended to carry ~~underground~~ electric fault current ~~conditions~~ from the point of a ground fault on a wiring system to the electrical supply source.

4. Statement of Problem and Substantiation for Proposal: (Note: State the problem that would be resolved by your recommendation; give the specific reason for your Proposal, including copies of tests, research papers, fire experience, etc. If more than 200 words, it may be abstracted for publication.)

Change uses proper electrical terms.

5. Copyright Assignment

(a) ☐ **I am the author of the text or other material (such as illustrations, graphs) proposed in this Proposal.**

(b) ☒ **Some or all of the text or other material proposed in this Proposal was not authored by me. Its source is as follows** (please identify which material and provide complete information on its source)**:**

ABC Co.

I hereby grant and assign to NFPA all and full rights in copyright in this Proposal and understand that I acquire no rights in any publication of NFPA in which this Proposal in this or another similar or analogous form is used. Except to the extent that I do not have authority to make an assignment in materials that I have identified in (b) above, I hereby warrant that I am the author of this Proposal and that I have full power and authority to enter into this assignment.

Signature (Required)

PLEASE USE SEPARATE FORM FOR EACH PROPOSAL • NFPA Fax: (617) 770-3500
Mail to: Secretary, Standards Council, National Fire Protection Association, 1 Batterymarch Park, Quincy, MA 02169-7471

8/29/2006

SAMPLE

Copyright National Fire Protection Association
Provided by IHS under license with NFPA
No reproduction or networking permitted without license from IHS
Not for Resale

NFPA Technical Committee Document Proposal Form

NOTE: All Proposals must be received by 5:00 p.m. EST/EDST on the published Proposal Closing Date.

For further information on the standards-making process, please contact the Codes and Standards Administration at 617-984-7249.

For technical assistance, please call NFPA at 617-770-3000.

FOR OFFICE USE ONLY

Log #: _____

Date Rec'd: _____

Please indicate in which format you wish to receive your ROP/ROC ☐ electronic ☐ paper ☐ download
(Note: If choosing the download option, you must view the ROP/ROC from our website; no copy will be sent to you.)

Date _____ **Name** _____ **Tel. No.** _____

Company _____

Street Address _____ **City** _____ **State** _____ **Zip** _____

Please indicate organization represented (if any) _____

1. (a) NFPA Document Title _____ **NFPA No. & Year** _____

(b) Section/Paragraph _____

2. Proposal Recommends (check one): ☐ new text ☐ revised text ☐ deleted text

3. Proposal (include proposed new or revised wording, or identification of wording to be deleted): [Note: Proposed text should be in legislative format, i.e., use underscore to denote wording to be inserted (inserted wording) and strike-through to denote wording to be deleted (~~deleted wording~~).]

4. Statement of Problem and Substantiation for Proposal: (Note: State the problem that would be resolved by your recommendation; give the specific reason for your Proposal, including copies of tests, research papers, fire experience, etc. If more than 200 words, it may be abstracted for publication.)

5. Copyright Assignment

(a) ☐ I am the author of the text or other material (such as illustrations, graphs) proposed in this Proposal.

(b) ☐ Some or all of the text or other material proposed in this Proposal was not authored by me. Its source is as follows (please identify which material and provide complete information on its source)**:**

_____

I hereby grant and assign to NFPA all and full rights in copyright in this Proposal and understand that I acquire no rights in any publication of NFPA in which this Proposal in this or another similar or analogous form is used. Except to the extent that I do not have authority to make an assignment in materials that I have identified in (b) above, I hereby warrant that I am the author of this Proposal and that I have full power and authority to enter into this assignment.

Signature (Required) _____

PLEASE USE SEPARATE FORM FOR EACH PROPOSAL • NFPA Fax: (617) 770-3500

Mail to: Secretary, Standards Council, National Fire Protection Association, 1 Batterymarch Park, Quincy, MA 02169-7471

8/29/2006

Copyright National Fire Protection Association
Provided by IHS under license with NFPA
No reproduction or networking permitted without license from IHS
Not for Resale