NFPA 70E

Standard for Electrical Safety In the Workplace

2004 Edition

NFPA, 1 Batterymarch Park, Quincy, MA 02169-7471
An International Codes and Standards Organization

Copyright National Fire Protection Association
Provided by IHS under license with NFPA
No reproduction or networking permitted without license from IHS

Not for Resale

IMPORTANT NOTICES AND DISCLAIMERS CONCERNING NFPA DOCUMENTS

NOTICE AND DISCLAIMER OF LIABILITY CONCERNING THE USE OF NFPA DOCUMENTS

NFPA codes, standards, recommended practices, and guides, of which the document contained herein is one, are developed through a consensus standards development process approved by the American National Standards Institute. This process brings together volunteers representing varied viewpoints and interests to achieve consensus on fire and other safety issues. While the NFPA administers the process and establishes rules to promote fairness in the development of consensus, it does not independently test, evaluate, or verify the accuracy of any information or the soundness of any judgments contained in its codes and standards.

The NFPA disclaims liability for any personal injury, property or other damages of any nature whatsoever, whether special, indirect, consequential or compensatory, directly or indirectly resulting from the publication, use of, or reliance on this document. The NFPA also makes no guaranty or warranty as to the accuracy or completeness of any information published herein.

In issuing and making this document available, the NFPA is not undertaking to render professional or other services for or on behalf of any person or entity. Nor is the NFPA undertaking to perform any duty owed by any person or entity to someone else. Anyone using this document should rely on his or her own independent judgment or, as appropriate, seek the advice of a competent professional in determining the exercise of reasonable care in any given circumstances.

The NFPA has no power, nor does it undertake, to police or enforce compliance with the contents of this document. Nor does the NFPA list, certify, test or inspect products, designs, or installations for compliance with this document. Any certification or other statement of compliance with the requirements of this document shall not be attributable to the NFPA and is solely the responsibility of the certifier or maker of the statement.

--`,,`,,`-`-`,,`,,`,`,,`---

Copyright National Fire Protection Association
Provided by IHS under license with NFPA
No reproduction or networking permitted without license from IHS
Not for Resale

ADDITIONAL NOTICES AND DISCLAIMERS

Updating of NFPA Documents

Users of NFPA codes, standards, recommended practices, and guides should be aware that these documents may be superseded at any time by the issuance of new editions or may be amended from time to time through the issuance of Tentative Interim Amendments. An official NFPA document at any point in time consists of the current edition of the document together with any Tentative Interim Amendments and any Errata then in effect. In order to determine whether a given document is the current edition and whether it has been amended through the issuance of Tentative Interim Amendments or corrected through the issuance of Errata, consult appropriate NFPA publications such as the National Fire Codes® Subscription Service, visit the NFPA website at www.nfpa.org, or contact the NFPA at the address listed below.

Interpretations of NFPA Documents

A statement, written or oral, that is not processed in accordance with Section 6 of the Regulations Governing Committee Projects shall not be considered the official position of NFPA or any of its Committees and shall not be considered to be, nor be relied upon as, a Formal Interpretation.

Patents

The NFPA does not take any position with respect to the validity of any patent rights asserted in connection with any items which are mentioned in or are the subject of NFPA codes, standards, recommended practices, and guides, and the NFPA disclaims liability for the infringement of any patent resulting from the use of or reliance on these documents. Users of these documents are expressly advised that determination of the validity of any such patent rights, and the risk of infringement of such rights, is entirely their own responsibility.

NFPA adheres to applicable policies of the American National Standards Institute with respect to patents. For further information contact the NFPA at the address listed below.

Law and Regulations

Users of these documents should consult applicable federal, state, and local laws and regulations. NFPA does not, by the publication of its codes, standards, recommended practices, and guides, intend to urge action that is not in compliance with applicable laws, and these documents may not be construed as doing so.

Copyrights

This document is copyrighted by the NFPA. It is made available for a wide variety of both public and private uses. These include both use, by reference, in laws and regulations, and use in private self-regulation, standardization, and the promotion of safe practices and methods. By making this document available for use and adoption by public authorities and private users, the NFPA does not waive any rights in copyright to this document.

Use of NFPA documents for regulatory purposes should be accomplished through adoption by reference. The term "adoption by reference" means the citing of title, edition, and publishing information only. Any deletions, additions, and changes desired by the adopting authority should be noted separately in the adopting instrument. In order to assist NFPA in following the uses made of its documents, adopting authorities are requested to notify the NFPA (Attention: Secretary, Standards Council) in writing of such use. For technical assistance and questions concerning adoption of NFPA documents, contact NFPA at the address below.

For Further Information

All questions or other communications relating to NFPA codes, standards, recommended practices, and guides and all requests for information on NFPA procedures governing its codes and standards development process, including information on the procedures for requesting Formal Interpretations, for proposing Tentative Interim Amendments, and for proposing revisions to NFPA documents during regular revision cycles, should be sent to NFPA headquarters, addressed to the attention of the Secretary, Standards Council, NFPA, 1 Batterymarch Park, P.O. Box 9101, Quincy, MA 02269-9101.

For more information about NFPA, visit the NFPA website at www.nfpa.org.

--`,,`,,`-`-`,,`,,`,`,,`---

Copyright National Fire Protection Association
Provided by IHS under license with NFPA
No reproduction or networking permitted without license from IHS

Not for Resale

Copyright © 2004, National Fire Protection Association, All Rights Reserved

NFPA 70E

Standard for

Electrical Safety in the Workplace

2004 Edition

This edition of NFPA 70E, *Standard for Electrical Safety in the Workplace,* was prepared by the Technical Committee on Electrical Safety in the Workplace and acted on by the National Fire Protection Association, Inc., at its November Meeting held November 17–19, 2003, in Reno, NV. It was issued by the Standards Council on January 14, 2004, with an effective date of February 11, 2004, and supersedes all previous editions.

This edition of NFPA 70E was approved as an American National Standard on February 11, 2004.

Foreword to NFPA 70E

The Standards Council of the National Fire Protection Association, Inc. (NFPA) announced on January 7, 1976, the formal appointment of a new electrical standards development committee. Entitled the Committee on Electrical Safety Requirements for Employee Workplaces, NFPA 70E, this new committee reported to the Association through the *National Electrical Code*® Technical Correlating Committee. This committee was formed to assist OSHA in preparing electrical safety standards that would serve OSHA's needs and that could be expeditiously promulgated through the provisions of Section 6(b) of the Occupational Safety and Health Act. OSHA found that in attempting to utilize the latest edition of NFPA 70, *National Electrical Code (NEC)*, it was confronted with the following problem areas:

(1) Updating to a new edition of the *NEC* would have to be through the OSHA 6(b) procedures. OSHA adopted the 1968 and then the 1971 *NEC* under Section 6(a) procedures of the Occupational Safety and Health Act of 1970. Today, however, OSHA can only adopt or modify a standard by the procedures of Section 6(b) of the OSHA Act, which provide for public notice, opportunity for public comment, and public hearings. The adoption of a new edition of the *NEC* by these procedures would require extensive effort and application of resources by OSHA and others. Even so, going through the "6(b)" procedures might result in requirements substantially different from those of the *NEC*, thereby creating the problem of conflict between the OSHA standard and other national and local standards.

(2) The *NEC* is intended for use primarily by those who design, install, and inspect electrical installations. OSHA's electrical regulations address the employer and employee in their workplace. The technical content and complexity of the *NEC* is extremely difficult for the average employer and employee to understand.

(3) Some of the detailed provisions within the *NEC* are not directly related to employee safety and therefore are of little value for OSHA's needs.

(4) Requirements for electrical safety-related work practices and maintenance of the electrical system considered critical to safety are not found in the *NEC*, which is essentially an electrical installation document. However, OSHA must also consider and develop these safety areas in its regulations.

--`,`-`-`,,`,,`,`,,`---

Copyright National Fire Protection Association
Provided by IHS under license with NFPA
No reproduction or networking permitted without license from IHS
Not for Resale

With these problem areas, it became apparent that a need existed for a new standard, tailored to fulfill OSHA's responsibilities, that would still be fully consistent with the *NEC*.

The foregoing issues led to the concept that a document be put together by a competent group, one representing all interests, that would extract suitable portions from the *NEC* and from other documents applicable to electrical safety. This concept and an offer of assistance was submitted in May 1975 to the Assistant Secretary of Labor for OSHA, who responded, "The concept, procedures, and scope of the effort discussed with my staff for preparing the subject standard appear to have great merit, and an apparent need exists for this proposed consensus document which OSHA could consider for promulgation under the provisions of Section 6(b) of the Act. OSHA does have an interest in this effort and believes the proposed standard would serve a useful purpose." With this positive encouragement from OSHA, a proposal to prepare such a document was presented to the NFPA Electrical Section, which unanimously supported a recommendation that the *NEC* Correlating Committee examine the feasibility of developing a document to be used as a basis for evaluating electrical safety in the workplace. In keeping with the recommendation of the Electrical Section and Correlating Committee, the Standards Council authorized the establishment of a committee to carry out this examination.

The committee found it feasible to develop a standard for electrical installations that would be compatible with the OSHA requirements for safety for the employee in locations covered by the *NEC*. The new standard was visualized as consisting of four major parts: Part I, Installation Safety Requirements; Part II, Safety-Related Work Practices; Part III, Safety-Related Maintenance Requirements; and Part IV, Safety Requirements for Special Equipment. Although desirable, it was not considered essential for all of the parts to be completed before the standard was published and made available. Each part is recognized as being an important aspect of electrical safety in the workplace, but the parts are sufficiently independent of each other to permit their separate publication. The new standard was named NFPA 70E, *Standard for Electrical Safety Requirements for Employee Workplaces*. The first edition was published in 1979 and included only Part I.

The second edition was published in 1981. It included Part I as originally published and a new Part II. In 1983, the third edition included Part I and Part II as originally published and a new Part III. In 1988, the fourth edition was published with only minor revisions.

The fifth edition, published in 1995, included major revisions to Part I, updating it to the 1993, *National Electrical Code (NEC)*. In Part II of the fifth edition, the concepts of "limits of approach" and establishment of a "Flash Protection Boundary" were introduced. In 2000, this sixth edition includes a complete Part I update to the 1999 *NEC*, as well as a new Part IV. Part II continues to focus on establishing Flash Protection Boundaries and the use of personal protective equipment. Also, added to Part II for 2000 are charts to assist the user in applying appropriate protective clothing and personal protective equipment for common tasks.

The sixth edition, published in 2004, reflects several significant changes to the document. The major changes emphasize safe work practices. Clarity and usability of the document were also enhanced. The name of the document was changed to NFPA 70E, *Standard for Electrical Safety in the Workplace*. The entire document was reformatted to comply with the *NEC Style Manual*, providing a unique designation for each requirement. The existing parts were renamed as chapters and were reorganized with the safety-related work practices relocated to the front of the document to highlight the emphasis, followed by safety-related maintenance requirements, safety requirements for special equipment, and safety-related installation requirements. The chapter on safety-related work practices also was reorganized to emphasize working on live parts as the last alternative work practice. An energized electrical work permit and related requirements were incorporated into the document. Several definitions were modified or added to enhance usability of the document, and Chapter 4 was updated to correlate with the 2002 *NEC*.

Copyright National Fire Protection Association
Provided by IHS under license with NFPA
No reproduction or networking permitted without license from IHS
Not for Resale

Essential to the proper use of Chapter 4 of this standard is the understanding that it is not intended to be applied as a design, installation, modification, or construction standard for an electrical installation or system. Its content has been intentionally limited in comparison to the content of the *NEC* in order to apply to an electrical installation or system as part of an employee's workplace. This standard is compatible with corresponding provisions of the *NEC,* but is not intended to, nor can it, be used in lieu of the *NEC*.

It can be debated that all of the requirements of the *NEC*, when traced through a chain of events, may relate to an electrical hazard, but, for practical purposes, inclusion has not been made of those provisions that, in general, are not directly associated with employee safety. In determining what provisions should be included in Chapter 4, the following guidelines were used:

(1) Its provisions should give protection to the employee from electrical hazards.
(2) Its provisions should be excerpted from the *NEC* in a manner that maintains their intent as they apply to employee safety. In some cases it has been judged essential to the meaning of the excerpted passages to retain some material not applying to employee safety.
(3) The provisions should be selected in a manner that will reduce the need for frequent revision, yet avoid technical obsolescence.
(4) Compliance with the provisions should be determined by means of an inspection during the normal state of employee occupancy without removal of parts requiring shutdown of the electrical installation or by damaging the building structure or finish.
(5) The provisions should not be encumbered with unnecessary details.
(6) The provisions should be written to enhance their understanding by the employer and employee.
(7) The provisions must not add any requirements not found in the *NEC*, nor must the intent of the *NEC* be changed if the wording is changed.

Chapter 4 of NFPA 70E was therefore intended to serve a very specific need of OSHA and is in no way intended to be used as a substitute for the *NEC*. Omission of any requirements presently in the *NEC* does not in any way affect the *NEC*, nor should these omitted requirements be considered as unimportant. They are essential to the *NEC* and its intended application, that is, its use by those who design, install, and inspect electrical installations. NFPA 70E, on the other hand, is intended for use by employers, employees, and OSHA.

IMPORTANT NOTE: This NFPA document is made available for use subject to important notices and legal disclaimers. These notices and disclaimers appear in all publications containing this document and may be found under the heading "Important Notices and Disclaimers Concerning NFPA Documents." They can also be obtained on request from NFPA or viewed at www.nfpa.org/disclaimers.

Changes other than editorial are indicated by a vertical rule beside the paragraph, table, or figure in which the change occurred. These rules are included as an aid to the user in identifying changes from the previous edition. Where one or more complete paragraphs have been deleted, the deletion is indicated by a bullet (•) between the paragraphs that remain.

Copyright National Fire Protection Association
Provided by IHS under license with NFPA
No reproduction or networking permitted without license from IHS
Not for Resale

Contents

ARTICLE

90 Introduction **70E**– 6

Chapter 1 Safety-Related Work Practices

100 Definitions **70E**– 7

I. General **70E**– 7
II. Over 600 Volts, Nominal **70E**– 15

110 General Requirements for Electrical Safety-Related Work Practices **70E**– 16

120 Establishing an Electrically Safe Work Condition **70E**– 19

130 Working On or Near Live Parts **70E**– 23

Chapter 2 Safety-Related Maintenance Requirements

200 Introduction **70E**– 37

205 General Maintenance Requirements **70E**– 37

210 Substations, Switchgear Assemblies, Switchboards, Panelboards, Motor Control Centers, and Disconnect Switches **70E**– 37

215 Premises Wiring **70E**– 38

220 Controller Equipment **70E**– 38

225 Fuses and Circuit Breakers **70E**– 38

230 Rotating Equipment **70E**– 38

235 Hazardous (Classified) Locations **70E**– 38

240 Batteries and Battery Rooms **70E**– 39

245 Portable Electric Tools and Equipment **70E**– 39

250 Personal Safety and Protective Equipment ... **70E**– 39

Chapter 3 Safety Requirements for Special Equipment

300 Introduction **70E**– 41

310 Safety-Related Work Practices for Electrolytic Cells **70E**– 41

320 Safety Requirements Related to Batteries and Battery Rooms **70E**– 44

330 Safety-Related Work Practices for Use of Lasers **70E**– 49

ARTICLE

340 Safety-Related Work Practices: Power Electronic Equipment **70E**– 50

Chapter 4 Installation Safety Requirements

400 General Requirements for Electrical Installations **70E**– 53

I. General **70E**– 53
II. 600 Volts, Nominal, or Less **70E**– 55
III. Over 600 Volts, Nominal **70E**– 57

410 Wiring Design and Protection **70E**– 59

420 Wiring Methods, Components, and Equipment for General Use **70E**– 67

430 Specific Purpose Equipment and Installations **70E**– 76

440 Hazardous (Classified) Locations, Class I, II, and III, Divisions 1 and 2 and Class I, Zones 0, 1, and 2 ..... **70E**– 84

450 Special Systems **70E**– 87

Annex A Referenced Publications **70E**– 93

Annex B Informational References **70E**– 94

Annex C Limits of Approach **70E**– 96

Annex D Sample Calculation of Flash Protection Boundary **70E**– 98

Annex E Electrical Safety Program **70E**–106

Annex F Hazard/Risk Evaluation Procedure **70E**–107

Annex G Sample Lockout/Tagout Procedure **70E**–108

Annex H Simplified, Two-Category, Flame-Resistant (FR) Clothing System **70E**–111

Annex I Job Briefing and Planning Checklist **70E**–112

Annex J Energized Electrical Work Permit **70E**–113

Annex K General Categories of Electrical Hazards **70E**–114

Annex L Typical Application of Safeguards in the Cell Line Working Zone **70E**–115

Annex M Cross-Reference Tables **70E**–116

Index **70E**–124

Copyright National Fire Protection Association
Provided by IHS under license with NFPA
No reproduction or networking permitted without license from IHS
Not for Resale

Technical Committee on Electrical Safety in the Workplace

Ray A. Jones, *Chair*
Electrical Safety Consulting Services, NC [U]
Rep. American Chemistry Council

Joseph J. Andrews, Electrical Safety Resources, Inc., SC [U]
Rep. Inst. of Electrical & Electronics Engr, Inc.
Allen H. Bingham, Bingham Consultants, GA [SE]
Rep. American Society of Testing and Materials Committee-F18
Gibeon W. Bradbury, Bradbury Technologies, ON, Canada [SE]
Rep. The Ontario Assn. of Certified Engr Technicians & Technologists
Julian R. Burns, Burns Electrical /Quality Power Solutions, Inc., NC [IM]
Rep. Independent Electrical Contractors, Inc.
Michael I. Callanan, Nat'l Joint Apprentice & Training Committee, PA [L]
Rep. Int'l Brotherhood of Electrical Workers
William R. Carney, Underwriters Laboratories Inc., IL [RT]
Darkmoon Cliffdweller, Albuquerque, NM [SE]
J. Frederick Doering, J. F. Doering Assoc., OH [SE]
Robert E. Downey, Allison Transmission Division, IN [U]
C. Bryan Drennan, Sandia National Laboratories, NM [U]
Drake A. Drobnick, Visteon Corp., MI [U]
Bobby J. Gray, Fluor Hanford/USDOE-Rickland, WA [E]
Rep. U.S. Department of Energy
Lee R. Hale, Alcoa, Incorporated, IA [M]
Rep. The Aluminum Assn.
Paul S. Hamer, Chevron Texaco Energy Research & Technology Co., CA [U]
Rep. American Petroleum Institute
C. E. Jackson, Jr., C. E. Jackson, Jr., Construction Consultant, MS [SE]
Dennis K. Neitzel, AVO Int'l Training Inst., TX [SE]
David L. Potts, Nat'l Electrical Contractors Assn., MD [IM]
Lynn F. Saunders, GM Worldwide Facilities Group, MI [U]
Keith W. Schuh, Fermi Nat'l Accelerator Laboratory, IL [U]
James G. Stallcup, GRAYBOY & Assoc., TX [SE]
Terry Tiede, Square D Co., IA [M]
Jack Wells, Pass & Seymour Legrand, NY [M]
Rep. Nat'l Electrical Mfrs. Assn.
Ron Widup, Shermco Industries, Inc., TX [IM]
Rep. Int'l Electrical Testing Assn. Inc.
Kathleen C. Wilmer, Duke Power Co., NC [U]
Rep. Edison Electric Inst.

Alternates

Louis A. Barrios, Jr., Shell Global Solutions, TX [U]
(Alt. to API Rep.)
Daryld Ray Crow, DRC Consulting, WA [M]
(Alt. to Aluminum Association Rep.)
Paul Dobrowsky, Eastman Kodak Company, NY [U]
(Alt. to the Inst. of Electrical & Electronics Rep.)
Maury C. Dunn, Dominion Virginia Power, VA [SE]
(Alt. to American Society of Testing and Materials Committee-F18 Rep.)
George D. Gregory, Square D Co., IA [M]
(Alt. to T. Tiede)
Palmer L. Hickman, Nat'l Joint Apprentice & Training Committee, PA [L]
(Alt. to Int'l Brotherhood of Electrical Workers Rep.)
Michael J. Hittel, GM Worldwide Facilities Group, MI [U]
(Alt. to L. F. Saunders)
Charles J. Kelly, Edison Electric Inst., DC [U]
(Alt. to Edison Electric Inst. Rep.)
Thomas D. Norwood, AVO Training Inst., TX [SE]
(Alt. to D. K. Neitzel)
David A. Pace, Olin Corp., AL [U]
(Alt. to American Chemistry Council Rep.)
Vincent J. Saporita, Cooper Bussmann, MO [M]
(Alt. to Nat'l Electrical Mfrs. Assn. Rep.)
Anthony A. Selk, Visteon Corporation, MI [U]
(Alt. to D. A. Drobnick)
James W. Stallcup, GRAYBOY & Assoc., TX [SE]
(Alt. to J. G. Stallcup)
James R. White, Shermco Industries, TX [IM]
(Alt. to Int'l Electrical Testing Assn. Inc. Rep.)

Nonvoting

James R. Tomaseski, International Brotherhood of Electrical Workers, DC [L]
Rep. National Electrical Safety Code

Kenneth G. Mastrullo, NFPA Staff Liaison

David M. Wallis, U.S. Dept of Labor OSHA, DC [E]

This list represents the membership at the time the Committee was balloted on the final text of this edition. Since that time, changes in the membership may have occurred. A key to classifications is found at the back of the document.

NOTE: Membership on a committee shall not in and of itself constitute an endorsement of the Association or any document developed by the committee on which the member serves.

Committee Scope: This Committee shall have primary responsibility for documents on electrical safety requirements to provide a practical safe working area for employees in their pursuit of gainful employment relative to the hazards arising from the use of electricity, as covered in the scope of NFPA 70, *National Electrical Code*. This Committee shall have primary jurisdiction but shall report to the Association through the National Electrical Code Technical Correlating Committee.

Copyright National Fire Protection Association
Provided by IHS under license with NFPA
No reproduction or networking permitted without license from IHS
Not for Resale

ARTICLE 90
Introduction

90.1 Scope.

(A) Covered. This standard addresses those electrical safety requirements for employee workplaces that are necessary for the practical safeguarding of employees in their pursuit of gainful employment. This standard covers the installation of electric conductors, electric equipment, signaling and communications conductors and equipment, and raceways for the following:

(1) Public and private premises, including buildings, structures, mobile homes, recreational vehicles, and floating buildings
(2) Yards, lots, parking lots, carnivals, and industrial substations

FPN: For additional information concerning such installations in an industrial or multibuilding complex, see ANSI C2-2002, *National Electrical Safety Code*.

(3) Installations of conductors and equipment that connect to the supply of electricity
(4) Installations used by the electric utility, such as office buildings, warehouses, garages, machine shops, and recreational buildings, that are not an integral part of a generating plant, substation, or control center

(B) Not Covered. This standard does not cover the following:

(1) Installations in ships, watercraft other than floating buildings, railway rolling stock, aircraft, or automotive vehicles other than mobile homes and recreational vehicles
(2) Installations underground in mines and self-propelled mobile surface mining machinery and its attendant electrical trailing cable
(3) Installations of railways for generation, transformation, transmission, or distribution of power used exclusively for operation of rolling stock or installations used exclusively for signaling and communications purposes
(4) Installations of communications equipment under the exclusive control of communications utilities located outdoors or in building spaces used exclusively for such installations
(5) Installations under the exclusive control of an electric utility where such installations:
   a. Consist of service drops or service laterals, and associated metering, or
   b. Are located in legally established easements, rights-of-way, or by other agreements either designated by or recognized by public service commissions, utility commissions, or other regulatory agencies having jurisdiction for such installations, or
   c. Are on property owned or leased by the electric utility for the purpose of communications, metering, generation, control, transformation, transmission, or distribution of electric energy.

90.2 Organization. This standard is divided into the following four chapters and thirteen annexes:

(1) Chapter 1, Safety-Related Work Practices
(2) Chapter 2, Safety-Related Maintenance Requirements
(3) Chapter 3, Safety Requirements for Special Equipment
(4) Chapter 4, Installation Safety Requirements
(5) Annex A, Referenced Publications
(6) Annex B, Informational Publications
(7) Annex C, Limits of Approach
(8) Annex D, Sample Calculation of Flash Protection Boundary
(9) Annex E, Electrical Safety Program
(10) Annex F, Hazard/Risk Evaluation Procedure
(11) Annex G, Sample Lockout/Tagout Procedure
(12) Annex H, Simplified, Two-Category, Flame-Resistant (FR) Clothing System
(13) Annex I, Job Briefing and Planning Checklist
(14) Annex J, Energized Electrical Work Permit
(15) Annex K, General Categories of Electrical Hazards
(16) Annex L, Typical Application of Safeguards in the Cell Line Working Zone
(17) Annex M, Cross-Reference Tables

Copyright National Fire Protection Association
Provided by IHS under license with NFPA
No reproduction or networking permitted without license from IHS
Not for Resale

Chapter 1 Safety-Related Work Practices

ARTICLE 100
Definitions

Scope. This article contains only those definitions essential to the proper application of this standard. It is not intended to include commonly defined general terms or commonly defined technical terms from related codes and standards. In general, only those terms that are used in two or more articles are defined in Article 100. Other definitions are included in the article in which they are used but may be referenced in Article 100.

Part I of this article contains definitions intended to apply wherever the terms are used throughout this standard. Part II contains definitions applicable only to the parts of articles specifically covering installations and equipment operating at over 600 volts, nominal.

The definitions in this article shall apply wherever the terms are used throughout this standard.

I. General

Accessible (as applied to equipment). Admitting close approach; not guarded by locked doors, elevation, or other effective means.

Accessible (as applied to wiring methods). Capable of being removed or exposed without damaging the building structure or finish or not permanently closed in by the structure or finish of the building.

Accessible, Readily (Readily Accessible). Capable of being reached quickly for operation, renewal, or inspections without requiring those to whom ready access is requisite to climb over or remove obstacles or to resort to portable ladders, and so forth.

Ampacity. The current, in amperes, that a conductor can carry continuously under the conditions of use without exceeding its temperature rating.

Appliance. Utilization equipment, generally other than industrial, that is normally built in standardized sizes or types and is installed or connected as a unit to perform one or more functions such as clothes washing, air conditioning, food mixing, deep frying, and so forth.

Approved. Acceptable to the authority having jurisdiction.

Arc Rating. The maximum incident energy resistance demonstrated by a material (or a layered system of materials) prior to breakopen or at the onset of a second-degree skin burn. Arc rating is normally expressed in cal/cm^2.

FPN: *Breakopen* is a material response evidenced by the formation of one or more holes in the innermost layer of flame-resistant material that would allow flame to pass through the material.

Armored Cable. A fabricated assembly of insulated conductors in a metallic enclosure.

Attachment Plug (Plug Cap) (Plug). A device that, by insertion in a receptacle, establishes a connection between the conductors of the attached flexible cord and the conductors connected permanently to the receptacle.

Automatic. Self-acting, operating by its own mechanism when actuated by some impersonal influence, as, for example, a change in current, pressure, temperature, or mechanical configuration.

Bare Hand Work. A technique of performing work on live parts, after the employee has been raised to the potential of the live part.

Barricade. A physical obstruction such as tapes, cones, or A-frame-type wood or metal structures intended to provide a warning about and to limit access to a hazardous area.

Barrier. A physical obstruction that is intended to prevent contact with equipment or live parts or to prevent unauthorized access to a work area.

Bathroom. An area including a basin with one or more of the following: a toilet, a tub, or a shower.

Bonding (Bonded). The permanent joining of metallic parts to form an electrically conductive path that ensures electrical continuity and the capacity to conduct safely any current likely to be imposed.

Bonding Jumper. A reliable conductor to ensure the required electrical conductivity between metal parts required to be electrically connected.

Branch Circuit. The circuit conductors between the final overcurrent device protecting the circuit and the outlet(s).

Building. A structure that stands alone or that is cut off from adjoining structures by fire walls with all openings therein protected by approved fire doors.

Cabinet. An enclosure that is designed for either surface mounting or flush mounting and is provided with a frame, mat, or trim in which a swinging door or doors are or can be hung.

Cablebus. An assembly of insulated conductors with fittings and conductor terminations in a completely enclosed, ventilated protective metal housing. Cablebus is ordinarily assembled at the point of installation from the components

Copyright National Fire Protection Association
Provided by IHS under license with NFPA
No reproduction or networking permitted without license from IHS
Not for Resale

furnished or specified by the manufacturer in accordance with instructions for the specific job. This assembly is designed to carry fault current and to withstand the magnetic forces of such current.

Circuit Breaker. A device designed to open and close a circuit by nonautomatic means and to open the circuit automatically on a predetermined overcurrent without damage to itself when properly applied within its rating.

Class I Locations. Class I locations are those in which flammable gases or vapors are or may be present in the air in quantities sufficient to produce explosive or ignitible mixtures. Class I locations shall include those specified in Division 1 or Division 2.

Class I, Division 1. A Class I, Division 1 location is a location:

(1) In which ignitible concentrations of flammable gases or vapors can exist under normal operating conditions, or
(2) In which ignitible concentrations of such gases or vapors may exist frequently because of repair or maintenance operations or because of leakage, or
(3) In which breakdown or faulty operation of equipment or processes might release ignitible concentrations of flammable gases or vapors and might also cause simultaneous failure of electrical equipment in such a way as to directly cause the electrical equipment to become a source of ignition.

FPN No. 1: This classification usually includes the following locations:

(1) Where volatile flammable liquids or liquefied flammable gases are transferred from one container to another
(2) Interiors of spray booths and areas in the vicinity of spraying and painting operations where volatile flammable solvents are used
(3) Locations containing open tanks or vats of volatile flammable liquids
(4) Drying rooms or compartments for the evaporation of flammable solvents)
(5) Locations containing fat- and oil-extraction equipment using volatile flammable solvents
(6) Portions of cleaning and dyeing plants where flammable liquids are used
(7) Gas generator rooms and other portions of gas manufacturing plants where flammable gas may escape
(8) Inadequately ventilated pump rooms for flammable gas or for volatile flammable liquids
(9) The interiors of refrigerators and freezers in which volatile flammable materials are stored in open, lightly stoppered, or easily ruptured containers
(10) All other locations where ignitible concentrations of flammable vapors or gases are likely to occur in the course of normal operations

FPN No. 2: In some Division 1 locations, ignitible concentrations of flammable gases or vapors could be present continuously or for long periods of time. Examples include the following:

(1) The inside of inadequately vented enclosures containing instruments normally venting flammable gases or vapors to the interior of the enclosure
(2) The inside of vented tanks containing volatile flammable liquids
(3) The area between the inner and outer roof sections of a floating roof tank containing volatile flammable fluids
(4) Inadequately ventilated areas within spraying or coating operations using volatile flammable fluids
(5) The interior of an exhaust duct that is used to vent ignitible concentrations of gases or vapors

Experience has demonstrated the prudence of avoiding the installation of instrumentation or other electric equipment in these particular areas altogether or, where it cannot be avoided because it is essential to the process and other locations are not feasible, using electric equipment or instrumentation approved for the specific application or consisting of intrinsically safe systems.

Class I, Division 2. A Class I, Division 2 location is a location:

(1) In which volatile flammable liquids or flammable gases are handled, processed, or used, but in which the liquids, vapors, or gases will normally be confined within closed containers or closed systems from which they can escape only in case of accidental rupture or breakdown of such containers or systems or in case of abnormal operation of equipment, or
(2) In which ignitible concentrations of gases or vapors are normally prevented by positive mechanical ventilation, and which might become hazardous through failure or abnormal operation of the ventilating equipment, or
(3) That is adjacent to a Class I, Division 1 location, and to which ignitible concentrations of gases or vapors might occasionally be communicated unless such communication is prevented by adequate positive-pressure ventilation from a source of clean air and effective safeguards against ventilation failure are provided.

FPN No. 1: This classification usually includes locations where volatile flammable liquids or flammable gases or vapors are used but that, in the judgment of the authority having jurisdiction, would become hazardous only in case of an accident or of some unusual operating condition. The quantity of flammable material that might escape in case of accident, the adequacy of ventilating equipment, the total area involved, and the record of the industry or business with respect to explosions or fires are all factors that merit consideration in determining the classification and extent of each location.

FPN No. 2: Piping without valves, checks, meters, and similar devices would not ordinarily introduce a hazardous condition even though used for flammable liquids or gases. Depending on factors such as the quantity and size of the containers and ventilation, locations used for the storage of flammable liquids or liquefied or compressed gases in sealed containers may be considered either hazardous (classified) or unclassified locations. See NFPA 30-2000, *Flammable and Combustible Liquids Code*, and NFPA 58-2001, *Liquefied Petroleum Gas Code*.

Copyright National Fire Protection Association
Provided by IHS under license with NFPA
No reproduction or networking permitted without license from IHS
Not for Resale

Class I, Zone 0, 1, and 2 Locations. Class I, Zone 0, 1, and 2 locations are those in which flammable gases or vapors are or may be present in the air in quantities sufficient to produce explosive or ignitible mixtures. Class I, Zone 0, 1, and 2 locations shall include those specified as follows:

Class I, Zone 0. A Class I, Zone 0 location is a location in which

(1) Ignitible concentrations of flammable gases or vapors are present continuously, or
(2) Ignitible concentrations of flammable gases or vapors are present for long periods of time.

FPN No. 1: As a guide in determining when flammable gases or vapors are present continuously or for long periods of time, refer to ANSI/API RP 505-1997, *Recommended Practice for Classification of Locations for Electrical Installations of Petroleum Facilities Classified as Class I, Zone 0, Zone 1, or Zone 2*; ISA 12.24.01-1998, *Recommended Practice for Classification of Locations for Electrical Installations Classified as Class I, Zone 0, Zone 1, or Zone 2*; IEC 60079-10-1995, *Electrical Apparatus for Explosive Gas Atmospheres, Classifications of Hazardous Areas*; and *Area Classification Code for Petroleum Installations, Model Code, Part 15*, Institute of Petroleum.

FPN No. 2: This classification includes locations inside vented tanks or vessels that contain volatile flammable liquids; inside inadequately vented spraying or coating enclosures, where volatile flammable solvents are used; between the inner and outer roof sections of a floating roof tank containing volatile flammable liquids; inside open vessels, tanks, and pits containing volatile flammable liquids; the interior of an exhaust duct that is used to vent ignitible concentrations of gases or vapors; and inside inadequately ventilated enclosures that contain normally venting instruments utilizing or analyzing flammable fluids and venting to the inside of the enclosures.

FPN No. 3: It is not good practice to install electrical equipment in Zone 0 locations except when the equipment is essential to the process or when other locations are not feasible (see FPN No. 2). If it is necessary to install electrical systems in a Zone 0 location, it is good practice to install intrinsically safe systems.

Class I, Zone 1. A Class I, Zone 1 location is a location

(1) In which ignitible concentrations of flammable gases or vapors are likely to exist under normal operating conditions; or
(2) In which ignitible concentrations of flammable gases or vapors may exist frequently because of repair or maintenance operations or because of leakage; or
(3) In which equipment is operated or processes are carried on, of such a nature that equipment breakdown or faulty operations could result in the release of ignitible concentrations of flammable gases or vapors and also cause simultaneous failure of electrical equipment in a mode to cause the electrical equipment to become a source of ignition; or
(4) That is adjacent to a Class I, Zone 0 location from which ignitible concentrations of vapors could be communicated, unless communication is prevented by adequate positive pressure ventilation from a source of clean air and effective safeguards against ventilation failure are provided.

FPN No. 1: Normal operation is considered the situation when plant equipment is operating within its design parameters. Minor releases of flammable material could be part of normal operations. Minor releases include the releases from mechanical packings on pumps. Failures that involve repair or shutdown (such as the breakdown of pump seals and flange gaskets, and spillage caused by accidents) are not considered normal operation.

FPN No. 2: This classification usually includes locations where volatile flammable liquids or liquefied flammable gases are transferred from one container to another. In areas in the vicinity of spraying and painting operations where flammable solvents are used; adequately ventilated drying rooms or compartments for evaporation of flammable solvents; adequately ventilated locations containing fat and oil extraction equipment using volatile flammable solvents; portions of cleaning and dyeing plants where volatile flammable liquids are used; adequately ventilated gas generator rooms and other portions of gas manufacturing plants where flammable gas could escape; inadequately ventilated pump rooms for flammable gas or for volatile flammable liquids; the interiors of refrigerators or freezers in which volatile flammable materials are stored in the open, lightly stoppered, or in easily ruptured containers; and other locations where ignitible concentrations of flammable vapors or gases are likely to occur in the course of normal operation but not classified Zone 0.

Class I, Zone 2. A Class I, Zone 2 location is a location

(1) In which ignitible concentrations of flammable gases or vapors are not likely to occur in normal operation and, if they do occur, will exist only for a short period; or
(2) In which volatile flammable liquids, flammable gases, or flammable vapors are handled, processed, or used but in which the liquids, gases, or vapors normally are confined within closed containers of closed systems from which they can escape, only as a result of accidental rupture or breakdown of the containers or system, or as a result of the abnormal operation of the equipment with which the liquids or gases are handled, processed, or used; or
(3) In which ignitible concentrations of flammable gases or vapors normally are prevented by positive mechanical ventilation but which may become hazardous as a result of failure or abnormal operation of the ventilating equipment; or
(4) That is adjacent to a Class I, Zone 1 location, from which ignitible concentrations of flammable gases or vapors could be communicated, unless such communication is prevented by adequate positive-pressure ventilation from a source of clean air and effective safeguards against ventilation failure are provided.

FPN: The Zone 2 classification usually includes locations where volatile flammable liquids or flammable gases or vapors are used but which would become hazardous only in case of an accident or of some unusual operating condition.

Copyright National Fire Protection Association
Provided by IHS under license with NFPA
No reproduction or networking permitted without license from IHS
Not for Resale

Class II Locations. Class II locations are those that are hazardous because of the presence of combustible dust. Class II locations shall include those in Division 1 and Division 2.

Class II, Division 1. A Class II, Division 1 location is a location

(1) In which combustible dust is in the air under normal operating conditions in quantities sufficient to produce explosive or ignitible mixtures, or
(2) Where mechanical failure or abnormal operation of machinery or equipment might cause such explosive or ignitible mixtures to be produced, and might also provide a source of ignition through simultaneous failure of electric equipment, through operation of protection devices, or from other causes, or
(3) In which combustible dusts of an electrically conductive nature may be present in hazardous quantities.

FPN: Combustible dusts that are electrically nonconductive include dusts produced in the handling and processing of grain and grain products, pulverized sugar and cocoa, dried egg and milk powders, pulverized spices, starch and pastes, potato and wood-flour, oil meal from beans and seed, dried hay, and other organic materials that could produce combustible dusts when processed or handled. Only Group E dusts are considered to be electrically conductive for classification purposes. Dusts containing magnesium or aluminum are particularly hazardous, and the use of extreme precaution is necessary to avoid ignition and explosion.

Class II, Division 2. A Class II, Division 2 location is a location

(1) Where combustible dust is not normally in the air in quantities sufficient to produce explosive or ignitible mixtures, and dust accumulations are normally insufficient to interfere with the normal operation of electrical equipment or other apparatus, but combustible dust may be in suspension in the air as a result of infrequent malfunctioning of handling or processing equipment, and
(2) Where combustible dust accumulations on, in, or in the vicinity of the electrical equipment may be sufficient to interfere with the safe dissipation of heat from electrical equipment or may be ignitible by abnormal operation or failure of electrical equipment.

FPN No. 1: The quantity of combustible dust that may be present and the adequacy of dust removal systems are factors that merit consideration in determining the classification and may result in an unclassified area.

FPN No. 2: Where products such as seed are handled in a manner that produces low quantities of dust, the amount of dust deposited could not warrant classification.

Class III Locations. Class III locations are those that are hazardous because of the presence of easily ignitible fibers or flyings, but in which such fibers or flyings are not likely to be in suspension in the air in quantities sufficient to produce ignitible mixtures. Class III locations shall include Division 1 and Division 2.

Class III, Division 1. A Class III, Division 1 location is a location in which easily ignitible fibers or materials producing combustible flyings are handled, manufactured, or used.

FPN No. 1: Such locations usually include some parts of rayon, cotton, and other textile mills; combustible fiber manufacturing and processing plants; cotton gins and cotton-seed mills; flax-processing plants; clothing manufacturing plants; woodworking plants; and establishments and industries involving similar hazardous processes or conditions.

FPN No. 2: Easily ignitible fibers or flyings include rayon, cotton (including cotton linters and cotton waste), sisal or henequen, istle, jute, hemp, tow, cocoa fiber, oakum, baled waste kapok, Spanish moss, excelsior, and other materials of similar nature.

Class III, Division 2. A Class III, Division 2 location is a location in which easily ignitible fibers are stored or handled other than in the process of manufacture.

Concealed. Rendered inaccessible by the structure or finish of the building. Wires in concealed raceways are considered concealed, even though they may become accessible by withdrawing them.

Conductive. Suitable for carrying electric current.

Conductor, Bare. A conductor having no covering or electrical insulation whatsoever.

Conductor, Covered. A conductor encased within material of composition or thickness that is not recognized by this standard as electrical insulation.

Conductor, Insulated. A conductor encased within material of composition and thickness that is recognized by this standard as electrical insulation.

Conduit Body. A separate portion of a conduit or tubing system that provides access through a removable cover(s) to the interior of the system at a junction of two or more sections of the system or at a terminal point of the system.

FPN: Boxes such as FS and FD or larger cast or sheet metal boxes are not classified as conduit bodies.

Controller. A device or group of devices that serves to govern, in some predetermined manner, the electric power delivered to the apparatus to which it is connected.

Cooking Unit, Counter-Mounted. A cooking appliance designed for mounting in or on a counter and consisting of one or more heating elements, internal wiring, and built-in or mountable controls.

Cutout Box. An enclosure designed for surface mounting that has swinging doors or covers secured directly to and telescoping with the walls of the box proper.

Dead Front. Without live parts exposed to a person on the operating side of the equipment.

Copyright National Fire Protection Association
Provided by IHS under license with NFPA
No reproduction or networking permitted without license from IHS
Not for Resale

Deenergized. Free from any electrical connection to a source of potential difference and from electrical charge; not having a potential different from that of the earth.

Device. A unit of an electrical system that is intended to carry but not utilize electric energy.

Dielectric Heating. Heating of a nominally insulating material due to its own dielectric losses when the material is placed in a varying electric field.

Disconnecting Means. A device, or group of devices, or other means by which the conductors of a circuit can be disconnected from their source of supply.

Effective Ground-Fault Current Path. An intentionally constructed, permanent, low-impedance electrically conductive path designed and intended to carry current under ground-fault conditions from the point of a ground-fault on a wiring system to the electrical supply source.

Electric Sign. A fixed, stationary, or portable self-contained, electrically illuminated utilization equipment with words or symbols designed to convey information or attract attention.

Electrical Hazard. A dangerous condition such that contact or equipment failure can result in electric shock, arc flash burn, thermal burn, or blast.

FPN: Class 2 power supplies, listed low voltage lighting systems, and similar sources are examples of circuits or systems that are not considered an electrical hazard.

Electrical Safety. Recognizing hazards associated with the use of electrical energy and taking precautions so that hazards do not cause injury or death.

Electrical Single-Line Diagram. A diagram that shows, by means of single lines and graphic symbols, the course of an electric circuit or system of circuits and the component devices or parts used in the circuit or system.

Electrically Safe Work Condition. A state in which the conductor or circuit part to be worked on or near has been disconnected from energized parts, locked/tagged in accordance with established standards, tested to ensure the absence of voltage, and grounded if determined necessary.

Enclosed. Surrounded by a case, housing, fence, or wall(s) that prevents persons from accidentally contacting energized parts.

Enclosure. The case or housing of apparatus, or the fence or walls surrounding an installation to prevent personnel from accidentally contacting energized parts, or to protect the equipment from physical damage.

Energized. Electrically connected to or having a source of voltage.

Equipment. A general term including material, fittings, devices, appliances, luminaires (fixtures), apparatus, and the like used as a part of, or in connection with, an electrical installation.

Explosionproof Apparatus. Apparatus enclosed in a case that is capable of withstanding an explosion of a specified gas or vapor that may occur within it and of preventing the ignition of a specified gas or vapor surrounding the enclosure by sparks, flashes, or explosion of the gas or vapor within, and that operates at such an external temperature that a surrounding flammable atmosphere will not be ignited thereby.

Exposed (as applied to live parts). Capable of being inadvertently touched or approached nearer than a safe distance by a person. It is applied to parts that are not suitably guarded, isolated, or insulated.

Exposed (as applied to wiring methods). On or attached to the surface or behind panels designed to allow access.

Exposed. For the purposes of Article 450, the word *exposed* means that the circuit is in such a position that, in case of failure of supports or insulation, contact with another circuit may result.

Externally Operable. Capable of being operated without exposing the operator to contact with live parts.

Feeder. All circuit conductors between the service equipment, the source of a separately derived system, or other power supply source and the final branch-circuit overcurrent device.

Fitting. An accessory such as a locknut, bushing, or other part of a wiring system that is intended primarily to perform a mechanical rather than an electrical function.

Flame-Resistant (FR). The property of a material whereby combustion is prevented, terminated, or inhibited following the application of a flaming or non-flaming source of ignition, with or without subsequent removal of the ignition source.

FPN: Flame resistance can be an inherent property of a material, or it can be imparted by a specific treatment applied to the material.

Flash Hazard. A dangerous condition associated with the release of energy caused by an electric arc.

Flash Hazard Analysis. A study investigating a worker's potential exposure to arc-flash energy, conducted for the purpose of injury prevention and the determination of safe work practices and the appropriate levels of PPE.

Flash Protection Boundary. An approach limit at a distance from exposed live parts within which a person could receive a second degree burn if an electrical arc flash were to occur.

Copyright National Fire Protection Association
Provided by IHS under license with NFPA
No reproduction or networking permitted without license from IHS
Not for Resale

Flash Suit. A complete FR clothing and equipment system that covers the entire body, except for the hands and feet. This includes pants, jacket, and bee-keeper-type hood fitted with a face shield.

Fuse. An overcurrent protective device with a circuit-opening fusible part that is heated and severed by the passage of overcurrent through it.

FPN: A fuse comprises all the parts that form a unit capable of performing the prescribed functions. It may or may not be the complete device necessary to connect it into an electrical circuit.

Ground. A conducting connection, whether intentional or accidental, between an electrical circuit or equipment and the earth or to some conducting body that serves in place of the earth.

Grounded. Connected to earth or to some conducting body that serves in place of the earth.

Grounded Conductor. A system or circuit conductor that is intentionally grounded.

Grounded, Effectively. Intentionally connected to earth through a ground connection or connections of sufficiently low impedance and having sufficient current-carrying capacity to prevent the buildup of voltages that may result in undue hazards to connected equipment or to persons.

Grounding Conductor. A conductor used to connect equipment or the grounded circuit of a wiring system to a grounding electrode or electrodes.

Grounding Conductor, Equipment. The conductor used to connect the non–current-carrying metal parts of equipment, raceways, and other enclosures to the system grounded conductor, the grounding electrode conductor, or both, at the service equipment or at the source of a separately derived system.

Grounding Electrode Conductor. The conductor used to connect the grounding electrode(s) to the equipment grounding conductor, to the grounded conductor, or to both, at each service, at each building or structure where supplied from a common service, or at the source of a separately derived system.

Ground Fault. An unintentional, electrically conducting connection between an ungrounded conductor of an electrical circuit and the normally non–current-carrying conductors, metallic enclosures, metallic raceways, metallic equipment, or earth.

Ground-Fault Circuit-Interrupter. A device intended for the protection of personnel that functions to de-energize a circuit or portion thereof within an established period of time when a current to ground exceeds the values established for a Class A device.

FPN: Class A ground-fault circuit-interrupter trips when the current to ground has a value in the range of 4 mA to 6 mA. For further information, see UL 943, *Standard for Ground-Fault Circuit Interrupters.*

Ground-Fault Current Path. An electrically conductive path from the point of a ground fault on a wiring system through normally non–current-carrying conductors, equipment, or the earth to the electrical supply source.

FPN: Examples of ground-fault current paths could consist of any combination of equipment grounding conductors, metallic raceways, metallic cable sheaths, electrical equipment, and any other electrically conductive material such as metal water and gas piping, steel framing members, stucco mesh, metal ducting, reinforcing steel, shields of communications cables, and the earth itself.

Guarded. Covered, shielded, fenced, enclosed, or otherwise protected by means of suitable covers, casings, barriers, rails, screens, mats, or platforms to remove the likelihood of approach or contact by persons or objects to a point of danger.

Health Care Facilities. Buildings or portions of buildings in which medical, dental, psychiatric, nursing, obstetrical, or surgical care is provided. Health care facilities include, but are not limited to, hospitals, nursing homes, limited care facilities, clinics, medical and dental offices, and ambulatory care centers, whether permanent or movable.

Heating Equipment. For the purposes of Article 430, the term includes any equipment used for heating purposes whose heat is generated by induction or dielectric methods.

Hoistway. Any shaftway, hatchway, well hole, or other vertical opening or space in which an elevator or dumbwaiter is designed to operate.

Identified (as applied to equipment). Recognizable as suitable for the specific purpose, function, use, environment, application, and so forth, where described in a particular code or standard requirement.

FPN: Examples of ways to determine suitability of equipment for a specific purpose, environment, or application include investigations by a qualified testing laboratory (listing and labeling), an inspection agency, or other organizations concerned with product evaluation.

Incident Energy. The amount of energy impressed on a surface, a certain distance from the source, generated during an electrical arc event. One of the units used to measure incident energy is calories per centimeter squared (cal/cm^2).

Induction Heating. The heating of a nominally conductive material due to its own I^2R losses when the material is placed in a varying electromagnetic field.

Insulated. Separated from other conducting surfaces by a dielectric (including air space) offering a high resistance to the passage of current.

Copyright National Fire Protection Association
Provided by IHS under license with NFPA
No reproduction or networking permitted without license from IHS
Not for Resale

FPN: When an object is said to be insulated, it is understood to be insulated for the conditions to which it is normally subject. Otherwise, it is, within the purpose of these rules, uninsulated.

Irrigation Machine. An electrically driven or controlled machine, with one or more motors, not hand portable, and used primarily to transport and distribute water for agricultural purposes.

Isolated (as applied to location). Not readily accessible to persons unless special means for access are used.

Labeled. Equipment or materials to which has been attached a label, symbol, or other identifying mark of an organization that is acceptable to the authority having jurisdiction and concerned with product evaluation, that maintains periodic inspection of production of labeled equipment or materials, and by whose labeling the manufacturer indicates compliance with appropriate standards or performance in a specified manner.

Lighting Outlet. An outlet intended for the direct connection of a lampholder, a luminaire (lighting fixture), or a pendant cord terminating in a lampholder.

Limited Approach Boundary. An approach limit at a distance from an exposed live part within which a shock hazard exists.

Listed. Equipment, materials, or services included in a list published by an organization that is acceptable to the authority having jurisdiction and concerned with evaluation of products or services, that maintains periodic inspection of production of listed equipment or materials or periodic evaluation of services, and whose listing states that the equipment, material, or services either meets appropriate designated standards or has been tested and found suitable for a specified purpose.

FPN: The means for identifying listed equipment may vary for each organization concerned with product evaluation, some of which do not recognize equipment as listed unless it is also labeled. Use of the system employed by the listing organization allows the authority having jurisdiction to identify a listed product.

Live Parts. Energized conductive components.

Location, Damp. Locations protected from weather and not subject to saturation with water or other liquids but subject to moderate degrees of moisture. Examples of such locations include partially protected locations under canopies, marquees, roofed open porches, and like locations, and interior locations subject to moderate degrees of moisture, such as some basements, some barns, and some cold-storage warehouses.

Location, Dry. A location not normally subject to dampness or wetness. A location classified as dry may be temporarily subject to dampness and wetness, as in the case of a building under construction.

Location, Wet. Installations under ground or in concrete slabs or masonry in direct contact with the earth; in locations subject to saturation with water or other liquids, such as vehicle washing areas; and in unprotected locations exposed to weather.

Medium Voltage Cable. A single or multiconductor solid dielectric insulated cable rated 2001 volts or higher.

Metal-Clad Cable. A factory assembly of one or more insulated circuit conductors with or without optical fiber members enclosed in an armor of interlocking metal tape, or a smooth or corrugated metallic sheath.

Metal Wireways. Sheet metal troughs with hinged or removable covers for housing and protecting electric wires and cable and in which conductors are laid in place after the wireway has been installed as a complete system.

Mineral-Insulated Metal-Sheathed Cable. A factory assembly of one or more conductors insulated with a highly compressed refractory mineral insulation and enclosed in a liquidtight and gastight continuous copper or alloy steel sheath.

Mobile X-Ray. X-ray equipment mounted on a permanent base with wheels, casters, or a combination of both to facilitate moving the equipment while completely assembled.

Motor Control Center. An assembly of one or more enclosed sections having a common power bus and principally containing motor control units.

Nonmetallic-Sheathed Cable. A factory assembly of two or more insulated conductors having an outer sheath of nonmetallic material.

Nonmetallic Wireways. Flame-retardant, nonmetallic troughs with removable covers for housing and protecting electric wires and cables in which conductors are laid in place after the wireway has been installed as a complete system.

Open Wiring on Insulators. An exposed wiring method using cleats, knobs, tubes, and flexible tubing for the protection and support of single insulated conductors run in or on buildings.

Outlet. A point on the wiring system at which current is taken to supply utilization equipment.

Outline Lighting. An arrangement of incandescent lamps or electric discharge lighting to outline or call attention to certain features such as the shape of a building or the decoration of a window.

Oven, Wall-Mounted. An oven for cooking purposes and consisting of one or more heating elements, internal wiring, and built-in or separately mountable controls.

Overcurrent. Any current in excess of the rated current of equipment or the ampacity of a conductor. It may result from overload, short circuit, or ground fault.

Copyright National Fire Protection Association
Provided by IHS under license with NFPA
No reproduction or networking permitted without license from IHS
Not for Resale

FPN: A current in excess of rating may be accommodated by certain equipment and conductors for a given set of conditions. Therefore, the rules for overcurrent protection are specific for particular situations.

Overload. Operation of equipment in excess of normal, full-load rating, or of a conductor in excess of rated ampacity that, when it persists for a sufficient length of time, would cause damage or dangerous overheating. A fault, such as a short circuit or ground fault, is not an overload.

Panelboard. A single panel or group of panel units designed for assembly in the form of a single panel, including buses and automatic overcurrent devices, and equipped with or without switches for the control of light, heat, or power circuits; designed to be placed in a cabinet or cutout box placed in or against a wall, partition, or other support; and accessible only from the front.

Power and Control Tray Cable. A factory assembly of two or more insulated conductors, with or without associated bare or covered grounding conductors under a nonmetallic jacket, for installation in cable trays, in raceways, or where supported by a messenger wire.

Power-Limited Tray Cable. Type PLTC nonmetallic-sheathed cable is a factory assembly of two or more insulated conductors under a nonmetallic jacket.

Premises Wiring (System). That interior and exterior wiring, including power, lighting, control, and signal circuit wiring together with all their associated hardware, fittings, and wiring devices, both permanently and temporarily installed, that extends from the service point or source of power, such as a battery, a solar photovoltaic system, or a generator, transformer, or converter windings, to the outlet(s). Such wiring does not include wiring internal to appliances, luminaires (fixtures), motors, controllers, motor control centers, and similar equipment.

Prohibited Approach Boundary. An approach limit at a distance from an exposed live part within which work is considered the same as making contact with the live part.

Qualified Person. One who has skills and knowledge related to the construction and operation of the electrical equipment and installations and has received safety training on the hazards involved.

Raceway. An enclosed channel of metal or nonmetallic materials designed expressly for holding wires, cables, or busbars, with additional functions as permitted in this standard. Raceways include, but are not limited to, rigid metal conduit, rigid nonmetallic conduit, intermediate metal conduit, liquidtight flexible conduit, flexible metallic tubing, flexible metal conduit, electrical metallic tubing, electrical nonmetallic tubing, underfloor raceways, cellular concrete floor raceways, cellular metal floor raceways, surface raceways, wireways, and busways.

Receptacle. A receptacle is a contact device installed at the outlet for the connection of an attachment plug. A single receptacle is a single contact device with no other contact device on the same yoke. A multiple receptacle is two or more contact devices on the same yoke.

Receptacle Outlet. An outlet where one or more receptacles are installed.

Restricted Approach Boundary. An approach limit at a distance from an exposed live part within which there is an increased risk of shock, due to electrical arc over combined with inadvertent movement, for personnel working in close proximity to the live part.

Separately Derived System. A premises wiring system whose power is derived from a battery, from a solar photovoltaic system, or from a generator, transformer, or converter windings, and that has no direct electrical connection, including a solidly connected grounded circuit conductor, to supply conductors originating in another system.

Service. The conductors and equipment for delivering electric energy from the serving utility to the wiring system of the premises served.

Service Cable. Service conductors made up in the form of a cable.

Service Conductors. The conductors from the service point to the service disconnecting means.

Service Drop. The overhead service conductors from the last pole or other aerial support to and including the splices, if any, connecting to the service-entrance conductors at the building or other structure.

Service-Entrance Cable. A single conductor or multiconductor assembly provided with or without an overall covering, primarily used for services, and of the following types:

Type SE. Service-entrance cable having a flame-retardant, moisture-resistant covering.

Type USE. Service-entrance cable, identified for underground use, having a moisture-resistant covering, but not required to have a flame-retardant covering.

Service-Entrance Conductors, Overhead System. The service conductors between the terminals of the service equipment and a point usually outside the building, clear of building walls, where joined by tap or splice to the service drop.

Service-Entrance Conductors, Underground System. The service conductors between the terminals of the service equipment and the point of connection to the service lateral.

FPN: Where service equipment is located outside the building walls, there may be no service-entrance conductors, or they may be entirely outside the building.

Copyright National Fire Protection Association
Provided by IHS under license with NFPA
No reproduction or networking permitted without license from IHS
Not for Resale

Service Equipment. The necessary equipment, usually consisting of a circuit breaker(s) or switch(es) and fuse(s), and their accessories, connected to the load end of service conductors to a building or other structure, or an otherwise designated area, and intended to constitute the main control and cutoff of the supply.

Service Point. The point of connection between the facilities of the serving utility and the premises wiring.

Shock Hazard. A dangerous condition associated with the possible release of energy caused by contact or approach to live parts.

Show Window. Any window used or designed to be used for the display of goods or advertising material, whether it is fully or partly enclosed or entirely open at the rear and whether or not it has a platform raised higher than the street floor level.

Signaling Circuit. Any electric circuit that energizes signaling equipment.

Special Permission. The written consent of the authority having jurisdiction.

Step Potential. A ground potential gradient difference that can cause current flow from foot to foot through the body.

Switch, Isolating. A switch intended for isolating an electric circuit from the source of power. It has no interrupting rating, and it is intended to be operated only after the circuit has been opened by some other means.

Switch, Motor Circuit. A switch rated in horsepower that is capable of interrupting the maximum operating overload current of a motor of the same horsepower rating as the switch at the rated voltage.

Switchboard. A large single panel, frame, or assembly of panels on which are mounted on the face, back, or both, switches, overcurrent and other protective devices, buses, and usually instruments. Switchboards are generally accessible from the rear as well as from the front and are not intended to be installed in cabinets.

Touch Potential. A ground potential gradient difference that can cause current flow from hand to hand or hand to foot through the body.

Unqualified Person. A person who is not a qualified person.

Utilization Equipment. Equipment that utilizes electric energy for electronic, electromechanical, chemical, heating, lighting, or similar purposes.

Ventilated. Provided with a means to permit circulation of air sufficient to remove an excess of heat, fumes, or vapors.

Volatile Flammable Liquid. A flammable liquid having a flash point below 38°C (100°F), or a flammable liquid whose temperature is above its flash point, or a Class II combustible liquid that has a vapor pressure not exceeding 276 kPa (40 psia) at 38°C (100°F) and whose temperature is above its flash point.

Voltage (of a Circuit). The greatest root-mean-square (rms) (effective) difference of potential between any two conductors of the circuit concerned.

FPN: Some systems, such as 3-phase 4-wire, single-phase 3-wire, and 3-wire direct-current, may have various circuits of various voltages.

Voltage, Nominal. A nominal value assigned to a circuit or system for the purpose of conveniently designating its voltage class (e.g., 120/240 volts, 480Y/277 volts, 600 volts). The actual voltage at which a circuit operates can vary from the nominal within a range that permits satisfactory operation of equipment.

FPN: See ANSI C84.1-1995, *Electric Power Systems and Equipment — Voltage Ratings (60 Hz)*.

Voltage to Ground. For grounded circuits, the voltage between the given conductor and that point or conductor of the circuit that is grounded; for ungrounded circuits, the greatest voltage between the given conductor and any other conductor of the circuit.

Watertight. Constructed so that moisture will not enter the enclosure under specified test conditions.

Weatherproof. Constructed or protected so that exposure to the weather will not interfere with successful operation.

FPN: Rainproof, raintight, or watertight equipment can fulfill the requirements for weatherproof where varying weather conditions other than wetness, such as snow, ice, dust, or temperature extremes, are not a factor.

Working Near (live parts). Any activity inside a Limited Approach Boundary.

Working On (live parts). Coming in contact with live parts with the hands, feet, or other body parts, with tools, probes, or with test equipment, regardless of the personal protective equipment a person is wearing.

II. Over 600 Volts, Nominal

Whereas the preceding definitions are intended to apply wherever the terms are used throughout this standard, the following definitions are applicable only to parts of this standard specifically covering installations and equipment operating at over 600 volts, nominal.

Copyright National Fire Protection Association
Provided by IHS under license with NFPA
No reproduction or networking permitted without license from IHS
Not for Resale

Fuse. An overcurrent protective device with a circuit-opening fusible part that is heated and severed by the passage of overcurrent through it.

FPN: A fuse comprises all the parts that form a unit capable of performing the prescribed functions. It may or may not be the complete device necessary to connect it into an electrical circuit.

Switching Device. A device designed to close, open, or both, one or more electric circuits.

Circuit Breaker. A switching device capable of making, carrying, and interrupting currents under normal circuit conditions, and also making, carrying for a specified time, and interrupting currents under specified abnormal circuit conditions, such as those of short circuit.

Cutout. An assembly of a fuse support with either a fuseholder, fuse carrier, or disconnecting blade. The fuseholder or fuse carrier may include a conducting element (fuse link), or may act as the disconnecting blade by the inclusion of a nonfusible member.

Disconnecting (or Isolating) Switch (Disconnector, Isolator). A mechanical switching device used for isolating a circuit or equipment from a source of power.

Disconnecting Means. A device, group of devices, or other means whereby the conductors of a circuit can be disconnected from their source of supply.

Interrupter Switch. A switch capable of making, carrying, and interrupting specified currents.

ARTICLE 110
General Requirements for Electrical Safety-Related Work Practices

110.1 Scope. Chapter 1 covers electrical safety-related work practices and procedures for employees who work on or near exposed energized electrical conductors or circuit parts in workplaces that are included in the scope of this standard. Electric circuits and equipment not included in the scope of this standard might present a hazard to employees not qualified to work near such facilities. Requirements have been included in Chapter 1 to protect unqualified employees from such hazards.

110.2 Purpose. These practices and procedures are intended to provide for employee safety relative to electrical hazards in the workplace.

110.3 Responsibility. The safety-related work practices contained in Chapter 1 shall be implemented by employees. The employer shall provide the safety-related work practices and shall train the employee who shall then implement them.

110.4 Multiemployer Relationship.

(A) Safe Work Practices. On multiemployer worksites (in all industry sectors), more than one employer may be responsible for hazardous conditions that violate safe work practices.

(B) Outside Personnel (Contractors, etc.). Whenever outside servicing personnel are to be engaged in activities covered by the scope and application of this standard, the on-site employer and the outside employer(s) shall inform each other of existing hazards, personal protective equipment/clothing requirements, safe work practice procedures, and emergency/evacuation procedures applicable to the work to be performed. This coordination shall include a meeting and documentation.

110.5 Organization. Chapter 1 of this standard is divided into three articles. Article 110 provides general requirements regarding the preparation for, and conduct of, work performed on or near electrical components regardless of whether such components are energized or not. Article 120 emphasizes working deenergized and describes the work practices used to deenergize electrical components to put them into an electrically safe work condition before attempting work on or near them. Article 130 provides requirements for working on or near electrical components that have not been placed into an electrically safe work condition.

110.6 Training Requirements.

(A) Safety Training. The training requirements contained in this section shall apply to employees who face a risk of electrical hazard that is not reduced to a safe level by the electrical installation requirements of Chapter 4. Such employees shall be trained to understand the specific hazards associated with electrical energy. They shall be trained in safety-related work practices and procedural requirements as necessary to provide protection from the electrical hazards associated with their respective job or task assignments. Employees shall be trained to identify and understand the relationship between electrical hazards and possible injury.

(B) Type of Training. The training required by this section shall be classroom or on-the-job type, or a combination of the two. The degree of training provided shall be determined by the risk to the employee.

(C) Emergency Procedures. Employees working on or near exposed energized electrical conductors or circuit parts shall be trained in methods of release of victims from contact with exposed energized conductors or circuit parts. Employees shall be regularly instructed in methods of first aid and emergency procedures, such as approved methods of resuscitation, if their duties warrant such training.

Copyright National Fire Protection Association
Provided by IHS under license with NFPA
No reproduction or networking permitted without license from IHS
Not for Resale

(D) Employee Training.

(1) Qualified Person. A qualified person shall be trained and knowledgeable of the construction and operation of equipment or a specific work method and be trained to recognize and avoid the electrical hazards that might be present with respect to that equipment or work method.

(a) Such persons shall also be familiar with the proper use of the special precautionary techniques, personal protective equipment, including arc-flash, insulating and shielding materials, and insulated tools and test equipment. A person can be considered qualified with respect to certain equipment and methods but still be unqualified for others.

(b) An employee who is undergoing on-the-job training and who, in the course of such training, has demonstrated an ability to perform duties safely at his or her level of training and who is under the direct supervision of a qualified person shall be considered to be a qualified person for the performance of those duties.

(c) Such persons permitted to work within the Limited Approach Boundary of exposed live parts operating at 50 volts or more shall, at a minimum, be additionally trained in all of the following:

(1) The skills and techniques necessary to distinguish exposed energized parts from other parts of electrical equipment
(2) The skills and techniques necessary to determine the nominal voltage of exposed live parts
(3) The approach distances specified in Table 130.2(C) and the corresponding voltages to which the qualified person will be exposed
(4) The decision-making process necessary to determine the degree and extent of the hazard and the personal protective equipment and job planning necessary to perform the task safely

(2) Unqualified Persons. Unqualified persons shall be trained in and be familiar with any of the electrical safety-related practices that might not be addressed specifically by Chapter 1 but are necessary for their safety.

110.7 Electrical Safety Program.

(A) General. The employer shall implement an overall electrical safety program that directs activity appropriate for the voltage, energy level, and circuit conditions.

FPN: Safety-related work practices are just one component of an overall electrical safety program.

(B) Awareness and Self-Discipline. The electrical safety program shall be designed to provide an awareness of the potential electrical hazards to employees who might from time to time work in an environment influenced by the presence of electrical energy. The program shall be developed to provide the required self-discipline for employees who occasionally must perform work on or near exposed energized electrical conductors and circuit parts. The program shall instill safety principles and controls.

(C) Electrical Safety Program Principles. The electrical safety program shall identify the principles upon which it is based.

FPN: For examples of typical electrical safety program principles, see Annex E.

(D) Electrical Safety Program Controls. An electrical safety program shall identify the controls by which it is measured and monitored.

FPN: For examples of typical electrical safety program controls, see Annex E.

(E) Electrical Safety Program Procedures. An electrical safety program shall identify the procedures for working on or near live parts operating at 50 volts or more or where an electrical hazard exists before work is started.

FPN: For an example of a typical electrical safety program procedure, see Annex E.

(F) Hazard/Risk Evaluation Procedure. An electrical safety program shall identify a hazard/risk evaluation procedure to be used before work is started on or near live parts operating at 50 volts or more or where an electrical hazard exists.

FPN: For an example of a hazard risk procedure, see Annex F.

(G) Job Briefing.

(1) General. Before starting each job, the employee in charge shall conduct a job briefing with the employees involved. The briefing shall cover such subjects as hazards associated with the job, work procedures involved, special precautions, energy source controls, and personal protective equipment requirements.

(2) Repetitive or Similar Tasks. If the work or operations to be performed during the work day or shift are repetitive and similar, at least one job briefing shall be conducted before the start of the first job of the day or shift. Additional job briefings shall be held if significant changes that might affect the safety of employees occur during the course of the work.

(3) Routine Work. A brief discussion shall be satisfactory if the work involved is routine and if the employee, by virtue of training and experience, can reasonably be expected to recognize and avoid the hazards involved in the job. A more extensive discussion shall be conducted if either of the following apply:

(1) The work is complicated or particularly hazardous.
(2) The employee cannot be expected to recognize and avoid the hazards involved in the job.

FPN: For an example of a job briefing form and planning checklist, see Annex I.

Copyright National Fire Protection Association
Provided by IHS under license with NFPA
No reproduction or networking permitted without license from IHS
Not for Resale

110.8 Working On or Near Electrical Conductors or Circuit Parts.

(A) General. Safety-related work practices shall be used to safeguard employees from injury while they are working on or near exposed electric conductors or circuit parts that are or can become energized. The specific safety-related work practice shall be consistent with the nature and extent of the associated electric hazards.

(1) Live Parts—Safe Work Condition. Live parts to which an employee might be exposed shall be put into an electrically safe work condition before an employee works on or near them, unless work on energized components can be justified according to 130.1.

(2) Live Parts—Unsafe Work Condition. Only qualified persons shall be permitted to work on electrical conductors or circuit parts that have not been put into an electrically safe work condition.

(B) Working On or Near Exposed Electrical Conductors or Circuit Parts that Are or Might Become Energized. Prior to working on or near exposed electrical conductors and circuit parts operating at 50 volts or more, lockout/tagout devices shall be applied in accordance with 120.1, 120.3, and 120.4. If, for reasons indicated in 130.1, lockout/tagout devices cannot be applied, 130.2(A) through 130.2(D)(2) shall apply to the work.

(1) Electrical Hazard Analysis. If the live parts operating at 50 volts or more are not placed in an electrically safe work condition, other safety-related work practices shall be used to protect employees who might be exposed to the electrical hazards involved. Such work practices shall protect each employee from arc flash and from contact with live parts operating at 50 volts or more directly with any part of the body or indirectly through some other conductive object. Work practices that are used shall be suitable for the conditions under which the work is to be performed and for the voltage level of the live parts. Appropriate safety-related work practices shall be determined before any person approaches exposed live parts within the Limited Approach Boundary by using both shock hazard analysis and flash hazard analysis.

(a) Shock Hazard Analysis. A shock hazard analysis shall determine the voltage to which personnel will be exposed, boundary requirements, and the personal protective equipment necessary in order to minimize the possibility of electrical shock to personnel.

FPN: See 130.2 for the requirements of conducting a shock hazard analysis.

(b) Flash Hazard Analysis. A flash hazard analysis shall be done in order to protect personnel from the possibility of being injured by an arc flash. The analysis shall determine the Flash Protection Boundary and the personal protective equipment that people within the Flash Protection Boundary shall use.

FPN: See 130.3 for the requirements of conducting a flash hazard analysis.

(2) Energized Electrical Work Permit. If live parts are not placed in an electrically safe work condition (i.e., for the reasons of increased or additional hazards or infeasibility per 130.1), work to be performed shall be considered energized electrical work and shall be performed by written permit only.

FPN: See 130.1(A) for the requirements of an energized electrical work permit.

(3) Unqualified Persons. Unqualified persons shall not be permitted to enter spaces that are required under 400.16 to be accessible to qualified employees only, unless the electric conductors and equipment involved are in an electrically safe work condition.

(4) Safety Interlocks. Only qualified persons following the requirements for working inside the Restricted Approach Boundary as covered by 130.2(C) shall be permitted to defeat or bypass an electrical safety interlock over which the person has sole control, and then only temporarily while the qualified person is working on the equipment. The safety interlock system shall be returned to its operable condition when the work is completed.

110.9 Use of Equipment.

(A) Test Instruments and Equipment.

(1) Rating. Test instruments, equipment, and their accessories shall be rated for circuits and equipment to which they will be connected.

(2) Design. Test instruments, equipment, and their accessories shall be designed for the environment to which they will be exposed, and for the manner in which they will be used.

(3) Visual Inspection. Test instruments and equipment and all associated test leads, cables, power cords, probes, and connectors shall be visually inspected for external defects and damage before the equipment is used on any shift. If there is a defect or evidence of damage that might expose an employee to injury, the defective or damaged item shall be removed from service, and no employee shall use it until repairs and tests necessary to render the equipment safe have been made.

(B) Portable Electric Equipment. This section applies to the use of cord-and-plug-connected equipment, including cord sets (extension cords).

Copyright National Fire Protection Association
Provided by IHS under license with NFPA
No reproduction or networking permitted without license from IHS
Not for Resale

(1) Handling. Portable equipment shall be handled in a manner that will not cause damage. Flexible electric cords connected to equipment shall not be used for raising or lowering the equipment. Flexible cords shall not be fastened with staples or hung in such a fashion as could damage the outer jacket or insulation.

(2) Grounding-type Equipment.

(a) A flexible cord used with grounding-type utilization equipment shall contain an equipment grounding conductor.

(b) Attachment plugs and receptacles shall not be connected or altered in a manner that would interrupt continuity of the equipment grounding conductor at the point where plugs are attached to receptacles. Additionally, these devices shall not be altered to allow the grounding pole of a plug to be inserted into slots intended for connection to the current-carrying conductors.

(c) Adapters that interrupt the continuity of the equipment grounding conductor shall not be used.

(3) Visual Inspection of Portable Cord-and-Plug-Connected Equipment and Flexible Cord Sets.

(a) Frequency of Inspection. Before use on any shift, portable cord-and-plug-connected equipment shall be visually inspected for external defects (such as loose parts, deformed and missing pins) and for evidence of possible internal damage (such as pinched or crushed outer jacket).

Exception: Cord-and-plug-connected equipment and flexible cord sets (extension cords) that remain connected once they are put in place and are not exposed to damage shall not be required to be visually inspected until they are relocated.

(b) Defective Equipment. If there is a defect or evidence of damage that might expose an employee to injury, the defective or damaged item shall be removed from service, and no employee shall use it until repairs and tests necessary to render the equipment safe have been made.

(c) Proper Mating. When an attachment plug is to be connected to a receptacle, the relationship of the plug and receptacle contacts shall first be checked to ensure that they are of mating configurations.

(d) Conductive Work Locations. Portable electric equipment used in highly conductive work locations (such as those inundated with water or other conductive liquids) or in job locations where employees are likely to contact water or conductive liquids shall be approved for those locations. In job locations where employees are likely to contact or be drenched with water or conductive liquids, ground-fault circuit-interrupter protection for personnel shall also be used.

(4) Connecting Attachment Plugs.

(a) Employees' hands shall not be wet when plugging and unplugging flexible cords and cord-and-plug-connected equipment if energized equipment is involved.

(b) Energized plug and receptacle connections shall be handled only with insulating protective equipment if the condition of the connection could provide a conductive path to the employee's hand (if, for example, a cord connector is wet from being immersed in water).

(c) Locking-type connectors shall be secured after connection.

(C) GFCI Protection Devices. GFCI protection devices shall be tested per manufacturer's instructions.

(D) Overcurrent Protection Modification. Overcurrent protection of circuits and conductors shall not be modified, even on a temporary basis, beyond that permitted by 410.9(A) and 410.9(B).

ARTICLE 120
Establishing an Electrically Safe Work Condition

120.1 Process of Achieving an Electrically Safe Work Condition. An electrically safe work condition shall be achieved when performed in accordance with the procedures of 120.2 and verified by the following process:

(1) Determine all possible sources of electrical supply to the specific equipment. Check applicable up-to-date drawings, diagrams, and identification tags.
(2) After properly interrupting the load current, open the disconnecting device(s) for each source.
(3) Wherever possible, visually verify that all blades of the disconnecting devices are fully open or that drawout-type circuit breakers are withdrawn to the fully disconnected position.
(4) Apply lockout/tagout devices in accordance with a documented and established policy.
(5) Use an adequately rated voltage detector to test each phase conductor or circuit part to verify they are deenergized. Test each phase conductor or circuit part both phase-to-phase and phase-to-ground. Before and after each test, determine that the voltage detector is operating satisfactorily.
(6) Where the possibility of induced voltages or stored electrical energy exists, ground the phase conductors or circuit parts before touching them. Where it could be reasonably anticipated that the conductors or circuit parts being deenergized could contact other exposed energized conductors or circuit parts, apply ground connecting devices rated for the available fault duty.

Copyright National Fire Protection Association
Provided by IHS under license with NFPA
No reproduction or networking permitted without license from IHS
Not for Resale

120.2 Working On or Near Deenergized Electrical Conductors or Circuit Parts That Have Lockout/Tagout Devices Applied. Each employer shall identify, document, and implement lockout/tagout procedures conforming to 120.3 to safeguard employees from exposure to electrical hazards while they are working on or near deenergized electrical conductors or circuit parts that are likely to result in injury from inadvertent or accidental contact or equipment failure. The lockout/tagout procedure shall be appropriate for the experience and training of the employees and conditions as they exist in the workplace.

(A) General. All electrical circuit conductors and circuit parts shall be considered energized until the source(s) of energy is (are) removed, at which time they shall be considered deenergized. All electrical circuit conductors and circuit parts shall not be considered to be in an electrically safe condition until all sources of energy are removed, the disconnecting means is under lockout/tagout, the absence of voltage is verified by an approved voltage testing device, and, where exposure to energized facilities exists, are temporarily grounded. *(See 120.1 for the six-step procedure to establish an electrically safe work condition.)* Electrical conductors and circuit parts that have been disconnected, but not under lockout/tagout, tested, and grounded (where appropriate) shall not be considered to be in an electrically safe work condition, and safe work practices appropriate for the circuit voltage and energy level shall be used. Lockout/tagout requirements shall apply to fixed, permanently installed equipment, to temporarily installed equipment, and to portable equipment.

(B) Principles of Lockout/Tagout Execution.

(1) Employee Involvement. Each person who could be exposed directly or indirectly to a source of electrical energy shall be involved in the lockout/tagout process.

FPN: An example of direct exposure is the qualified electrician who works on the motor starter control, the power circuits, or the motor. An example of indirect exposure is the person who works on the coupling between the motor and compressor.

(2) Training. All persons who could be exposed shall be trained to understand the established procedure to control the energy and their responsibility in executing the procedure. New (or reassigned) employees shall be trained (or retrained) to understand the lockout/tagout procedure as related to their new assignment.

(3) Plan. A plan shall be developed on the basis of the existing electrical equipment and system and shall utilize up-to-date diagrammatic drawing representation(s).

(4) Control of Energy. All sources of electrical energy shall be controlled in such a way as to minimize employee exposure to electrical hazards.

(5) Identification. The lockout/tagout device shall be unique and readily identifiable as a lockout/tagout device.

(6) Voltage. Voltage shall be removed and absence of voltage verified.

(7) Coordination. The established electrical lockout/tagout procedure shall be coordinated with all of the employer's procedures associated with lockout/tagout of other energy sources. The lockout/tagout procedure shall be audited for execution and completeness on an annual basis.

(C) Responsibility.

(1) Procedures. The employer shall establish lockout/tagout procedures for the organization, provide training to employees, provide equipment necessary to execute the details of the procedure, audit execution of the procedures to ensure employee understanding/compliance, and audit the procedure for improvement opportunity and completeness.

(2) Form of Control. Three forms of hazardous electrical energy control shall be permitted: individual employee control, simple lockout/tagout, and complex lockout/tagout. *[See 120.2(D).]* For the individual employee control and the simple lockout/tagout, the qualified person shall be in charge. For the complex lockout/tagout, the person in charge shall have overall responsibility. *(See Annex G for a sample lockout/tagout procedure.)*

(3) Audit Procedures. An audit shall be conducted at least annually by a qualified person and shall cover at least one lockout/tagout in progress and the procedure details. The audit shall be designed to correct deficiencies in the procedure or in employee understanding.

(D) Hazardous Electrical Energy Control Procedures.

(1) Individual Qualified Employee Control Procedure. The individual qualified employee control procedure shall be permitted when equipment with exposed conductors and circuit parts is deenergized for minor maintenance, servicing, adjusting, cleaning, inspection, operating conditions, and the like. The work shall be permitted to be performed without the placement of lockout/tagout devices on the disconnecting means, provided the disconnecting means is adjacent to the conductor, circuit parts, and equipment on which the work is performed, the disconnecting means is clearly visible to the individual qualified employee involved in the work, and the work does not extend beyond one shift.

(2) Simple Lockout/Tagout Procedure. All lockout/tagout procedures that are not under individual qualified employee control *[see 120.2(D)(1)]* or complex lockout/tagout *[see 120.2(D)(3)]* shall be considered to be simple lockout/tagout

Copyright National Fire Protection Association
Provided by IHS under license with NFPA
No reproduction or networking permitted without license from IHS
Not for Resale

procedures. All lockout/tagout procedures that involve only a qualified person(s) deenergizing one set of conductors or circuit part source for the sole purpose of performing work on or near electrical equipment shall be considered to be a simple lockout/tagout. Simple lockout/tagout plans shall not be required to be written for each application. Each worker shall be responsible for his or her own lockout/tagout.

(3) Complex Lockout/Tagout Procedure.

(a) A complex lockout/tagout plan shall be permitted where one or more of the following exist:

(1) Multiple energy sources
(2) Multiple crews
(3) Multiple crafts
(4) Multiple locations
(5) Multiple employers
(6) Different disconnecting means
(7) Particular sequences
(8) A job or task that continues for more than one work period

(b) A person shall be in charge of a complex lockout/tagout procedure. Such person shall be a qualified individual who is specifically appointed with overall responsibility to ensure that all energy sources are under lockout/tagout and to account for all persons working on the job/task.

(c) The complex lockout/tagout procedure shall identify the person in charge. In this (these) instance(s), the person in charge shall be permitted to install locks/tags, or direct their installation, on behalf of other employees. The person-in-charge shall be held accountable for safe execution of the complex lockout/tagout. The complex lockout/tagout procedure shall address all the concerns of employees who might be exposed. All complex lockout/tagout procedures shall require a written plan of execution that identifies the person in charge. All complex lockout/tagout plans shall identify the method to account for all persons who might be exposed to electrical hazards in the course of the lockout/tagout.

(4) Coordination.

(a) The established electrical lockout/tagout procedure shall be coordinated with all other employer's procedures for control of exposure to electrical energy sources such that all employer's procedural requirements are adequately addressed on a site basis.

(b) The procedure for control of exposure to electrical hazards shall be coordinated with other procedures for control of other hazardous energy sources such that they are based on similar/identical concepts.

(c) The electrical lockout/tagout procedure shall always include voltage testing requirements where there might be direct exposure to electrical energy hazards.

(d) Electrical lockout/tagout devices shall be permitted to be similar to lockout/tagout devices for control of other hazardous energy sources, such as pneumatic, hydraulic, thermal, and mechanical, provided such devices are used only for control of hazardous energy and for no other purpose.

(5) Training and Retraining. Each employer shall provide training as required to ensure employees' understanding of the lockout/tagout procedure content and their duty in executing such procedures.

(E) Equipment.

(1) Lock Application. Energy isolation devices for machinery or equipment installed after January 2, 1990, shall be capable of accepting a lockout device.

(2) Lockout/Tagout Device. Each employer shall supply, and employees shall use, lockout/tagout devices and equipment necessary to execute the requirements of 120.3(E). Locks and tags used for control of exposure to electrical energy hazards shall be unique, shall be readily identifiable as lockout/tagout devices, and shall be used for no other purpose.

(3) Lockout Device.

(a) A lockout device shall include a lock (either keyed or combination).

(b) The lockout device shall include a method of identifying the individual who installed the lockout device.

(c) A lockout device shall be permitted to be only a lock, provided the lock is readily identifiable as a lockout device, in addition to a means of identifying the person who installed the lock.

(d) Lockout devices shall be attached to prevent operation of the disconnecting means without resorting to undue force or the use of tools.

(e) The tag used in conjunction with a lockout device shall contain a statement prohibiting unauthorized operation of the disconnecting means or unauthorized removal of the device.

(f) Lockout devices shall be suitable for the environment and for the duration of the lockout.

(g) Whether keyed or combination locks are used, the key or combination shall remain in the possession of the individual installing the lock or the person in charge, when provided by the established procedure.

(4) Tagout Device.

(a) A tagout device shall include a tag together with an attachment means.

(b) The tagout device shall be readily identifiable as a tagout device and suitable for the environment and duration of the tagout.

Copyright National Fire Protection Association
Provided by IHS under license with NFPA
No reproduction or networking permitted without license from IHS
Not for Resale

(c) A tagout device attachment means shall be capable of withstanding at least 224.4 N (50 lb) of force exerted at a right angle to the disconnecting means surface. The tag attachment means shall be nonreusable, attachable by hand, self-locking, and nonreleasable, equal to an all-environmental tolerant nylon cable tie.

(d) Tags shall contain a statement prohibiting unauthorized operation of the disconnecting means or removal of the tag.

Exception to (a), (b), and (c): A "hold card tagging tool" on an overhead conductor in conjunction with a hotline tool to install the tagout device safely on a disconnect that is isolated from the worker(s).

(5) Electrical Circuit Interlocks. Up-to-date diagrammatic drawings shall be consulted to ensure that no electrical circuit interlock operation can result in reenergizing the circuit being worked on.

(6) Control Devices. Locks/tags shall be installed only on circuit disconnecting means. Control devices, such as pushbuttons or selector switches, shall not be used as the primary isolating device.

(F) Procedures. The employer shall maintain a copy of the procedures required by this section and shall make the procedures available to all employees.

(1) Planning. The procedure shall require planning, including 120.2(F)(1)(a) through 120.2(F)(2)(n).

(a) Locating Sources. Up-to-date single-line drawings shall be considered a primary reference source for such information. When up-to-date drawings are not available, the employer shall be responsible for ensuring that an equally effective means of locating sources of energy is employed.

(b) Exposed Persons. The plan shall identify persons who might be exposed to an electrical hazard during the execution of the job or task.

(c) Person In Charge. The plan shall identify the person in charge and his or her responsibility in the lockout/tagout.

(d) Individual Qualified Employee Control. Individual qualified employee control shall be in accordance with 120.2(D)(1).

(e) Simple Lockout/Tagout. Simple lockout/tagout procedure shall be in accordance with 120.2(D)(2).

(f) Complex Lockout/Tagout. Complex lockout/tagout procedure shall be in accordance with 120.2(D)(3).

(2) Elements of Control. The procedure shall identify elements of control.

(a) Deenergizing Equipment (Shutdown). The procedure shall establish the person who performs the switching and where and how to deenergize the load.

(b) Stored Energy. The procedure shall include requirements for releasing stored electric or mechanical energy that might endanger personnel. All capacitors shall be discharged, and high capacitance elements shall also be short-circuited and grounded before the associated equipment is touched or worked on. Springs shall be released or physical restraint shall be applied when necessary to immobilize mechanical equipment and pneumatic and hydraulic pressure reservoirs. Other sources of stored energy shall be blocked or otherwise relieved.

(c) Disconnecting Means. The procedure shall identify how to verify that the circuit is deenergized (open).

(d) Responsibility. The procedure shall identify the person who is responsible to verify that the lockout/tagout procedure is implemented and who is responsible to ensure that the task is completed prior to removing locks/tags. A mechanism to accomplish lockout/tagout for multiple (complex) jobs/tasks where required, including the person responsible for coordination, shall be included.

(e) Verification. The procedure shall verify that equipment cannot be restarted. The equipment operating controls, such as pushbuttons, selector switches, and electrical interlocks, shall be operated or otherwise shall be verified that the equipment cannot be restarted.

(f) Testing. The procedure shall establish the following:

(1) What voltage detector will be used and who will use it to verify proper operation of the voltage detector before and after use
(2) A requirement to define the boundary of the work area
(3) A requirement to test before touching every exposed conductor or circuit part(s) within the defined boundary of the work area
(4) A requirement to retest for absence of voltage when circuit conditions change or when the job location has been left unattended
(5) Where there is no accessible exposed point to take voltage measurements, planning considerations shall include methods of verification.

(g) Grounding. Grounding requirements for the circuit shall be established, including whether the grounds shall be installed for the duration of the task or temporarily are established by the procedure. Grounding needs or requirements shall be permitted to be covered in other work rules and might not be part of the lockout/tagout procedure.

(h) Shift Change. A method shall be identified in the procedure to transfer responsibility for lockout/tagout to another person or person in charge when the job or task extends beyond one shift.

(i) Coordination. The procedure shall establish how coordination is accomplished with other jobs or tasks in progress, including related jobs or tasks at remote locations, including the person responsible for coordination.

Copyright National Fire Protection Association
Provided by IHS under license with NFPA
No reproduction or networking permitted without license from IHS
Not for Resale

(j) Accountability for Personnel. A method shall be identified in the procedure to account for all persons who could be exposed to hazardous energy during the lockout/tagout.

(k) Lockout/Tagout Application. The procedure shall clearly identify when and where lockout applies, in addition to when and where tagout applies, and shall address the following:

(1) Lockout shall be defined as installing a lockout device on all sources of hazardous energy such that operation of the disconnecting means is prohibited and forcible removal of the lock is required to operate the disconnect means.
(2) Tagout shall be defined as installing a tagout device on all sources of hazardous energy, such that operation of the disconnect means is prohibited. The tagout device shall be installed in the same position available for the lockout device.
(3) Where it is not possible to attach a lock to existing disconnecting means, the disconnecting means shall not be used as the only means to put the circuit in an electrically safe work condition.
(4) The use of tagout procedures without a lock shall be permitted only in cases where equipment design precludes the installation of a lock on a energy isolation device(s). When tagout is employed, at least one additional safety measure shall be employed. In such cases, the procedure shall clearly establish responsibilities and accountability for each person who might be exposed to electrical hazards.

(l) Removal of Lockout/Tagout Devices. The procedure shall identify the details for removing locks or tags when the installing individual is unavailable. When locks or tags are removed by other than the installer, the employer shall attempt to locate the person prior to removing the lock or tag. When the lock or tag is removed because the installer is unavailable, the installer shall be informed prior to returning to work.

(m) Release for Return to Service. The procedure shall identify steps to be taken when the job or task requiring lockout/tagout is completed. Before electric circuits or equipment are reenergized, appropriate tests and visual inspections shall be conducted to verify that all tools, mechanical restraints and electrical jumpers, shorts, and grounds have been removed, so that the circuits and equipment are in a condition to be safely energized. Where appropriate, the employees responsible for operating the machines or process shall be notified when circuits and equipment are ready to be energized, and such employees shall provide assistance as necessary to safely energize the circuits and equipment. The procedure shall contain a statement requiring the area to be inspected to ensure that nonessential items have been removed. One such step shall ensure that all personnel are clear of exposure to dangerous conditions resulting from reenergizing the service and that blocked mechanical equipment or grounded equipment is cleared and prepared for return to service.

(n) Temporary Release for Testing/Positioning. The procedure shall clearly identify the steps and qualified persons' responsibilities when the job or task requiring lockout/tagout is to be interrupted temporarily for testing or positioning of equipment; then the steps shall be identical to the steps for return to service. See 110.9 and 130.4 for requirements when using test instruments and equipment.

120.3 Temporary Protective Grounding Equipment.

(A) Placement. Temporary protective grounds shall be placed at such locations and arranged in such a manner as to prevent each employee from being exposed to hazardous differences in electrical potential.

(B) Capacity. Temporary protective grounds shall be capable of conducting the maximum fault current that could flow at the point of grounding for the time necessary to clear the fault.

(C) Equipment Approval. Temporary protective grounding equipment shall meet the requirements of ASTM F 855, *Standard Specification for Temporary Protective Grounds to be Used on De-energized Electric Power Lines and Equipment,* 1997.

(D) Impedance. Temporary protective grounds shall have an impedance low enough to cause immediate operation of protective devices in case of accidental energizing of the electric conductors or circuit parts.

ARTICLE 130
Working On or Near Live Parts

130.1 Justification for Work. Live parts to which an employee might be exposed shall be put into an electrically safe work condition before an employee works on or near them, unless the employer can demonstrate that deenergizing introduces additional or increased hazards or is infeasible due to equipment design or operational limitations. Energized parts that operate at less than 50 volts to ground shall not be not required to be deenergized if there will be no increased exposure to electrical burns or to explosion due to electric arcs.

FPN No. 1: Examples of increased or additional hazards include, but are not limited to, interruption of life support equipment, deactivation of emergency alarm systems, and shutdown of hazardous location ventilation equipment.

Copyright National Fire Protection Association
Provided by IHS under license with NFPA
No reproduction or networking permitted without license from IHS
Not for Resale

FPN No. 2: Examples of work that might be performed on or near exposed energized electrical conductors or circuit parts because of infeasibility due to equipment design or operational limitations include performing diagnostics and testing (e.g., start-up or troubleshooting) of electric circuits that can only be performed with the circuit energized and work on circuits that form an integral part of a continuous process that would otherwise need to be completely shut down in order to permit work on one circuit or piece of equipment.

FPN No. 3: For voltages of less than 50 volts, the decision to deenergize should include consideration of the capacity of the source and any overcurrent protection between the energy source and the worker.

(A) Energized Electrical Work Permit.

(1) Where Required. If live parts are not placed in an electrically safe work condition (i.e., for the reasons of increased or additional hazards or infeasibility per 130.1), work to be performed shall be considered energized electrical work and shall be performed by written permit only.

(2) Elements of Work Permit. The energized electrical work permit shall include, but not be limited to, the following items:

(1) A description of the circuit and equipment to be worked on and their location
(2) Justification for why the work must be performed in an energized condition (130.1)
(3) A description of the safe work practices to be employed [110.8(B)]
(4) Results of the shock hazard analysis [110.8(B)(1)(a)]
(5) Determination of shock protection boundaries [130.2(B) and Table 130.2(C)]
(6) Results of the flash hazard analysis (130.3)
(7) The Flash Protection Boundary [130.3(A)]
(8) The necessary personal protective equipment to safely perform the assigned task [130.3(B), 130.7(C)(9), and Table 130.7(C)(9)(a)]
(9) Means employed to restrict the access of unqualified persons from the work area [110.8(A)(2)]
(10) Evidence of completion of a job briefing, including a discussion of any job-specific hazards [110.7(G)]
(11) Energized work approval (authorizing or responsible management, safety officer, or owner, etc.) signature(s)

(3) Exemptions to Work Permit. Work performed on or near live parts by qualified persons related to tasks such as testing, troubleshooting, voltage measuring, etc., shall be permitted to be performed without an energized electrical work permit, provided appropriate safe work practices and personal protective equipment in accordance with Chapter 1 are provided and used.

FPN: For an example of an acceptable energized electrical work permit, see Annex J.

130.2 Approach Boundaries to Live Parts.

(A) Shock Hazard Analysis. A shock hazard analysis shall determine the voltage to which personnel will be exposed, boundary requirements, and the personal protective equipment necessary in order to minimize the possibility of electric shock to personnel.

(B) Shock Protection Boundaries. The shock protection boundaries identified as Limited, Restricted, and Prohibited Approach Boundaries are applicable to the situation in which approaching personnel are exposed to live parts. See Table 130.2(C) for the distances associated with various system voltages.

FPN: In certain instances, the Flash Protection Boundary might be a greater distance from the exposed live parts than the Limited Approach Boundary.

(C) Approach to Exposed Live Parts Operating at 50 Volts or More. No qualified person shall approach or take any conductive object closer to exposed live parts operating at 50 volts or more than the Restricted Approach Boundary set forth in Table 130.2(C), unless any of the following apply:

(1) The qualified person is insulated or guarded from the live parts operating at 50 volts or more (insulating gloves or insulating gloves and sleeves are considered insulation only with regard to the energized parts upon which work is being performed), and no uninsulated part of the qualified person's body crosses the Prohibited Approach Boundary set forth in Table 130.2(C).
(2) The live part operating at 50 volts or more is insulated from the qualified person and from any other conductive object at a different potential.
(3) The qualified person is insulated from any other conductive object as during live-line bare-hand work.

(D) Approach by Unqualified Persons. Unqualified persons shall not be permitted to enter spaces that are required under 400.16(A) to be accessible to qualified employees only, unless the electric conductors and equipment involved are in an electrically safe work condition.

(1) Working At or Close to the Limited Approach Boundary. Where one or more unqualified persons are working at or close to the Limited Approach Boundary, the designated person in charge of the work space where the electrical hazard exists shall cooperate with the designated person in charge of the unqualified person(s) to ensure that all work can be done safely. This shall include advising the unqualified person(s) of the electrical hazard and warning him or her to stay outside of the Limited Approach Boundary.

Copyright National Fire Protection Association
Provided by IHS under license with NFPA
No reproduction or networking permitted without license from IHS
Not for Resale

Table 130.2(C) Approach Boundaries to Live Parts for Shock Protection. (All dimensions are distance from live part to employee.)

(1)	(2) Limited Approach Boundary[1]	(3) Limited Approach Boundary[1]	(4) Restricted Approach Boundary[1]; Includes Inadvertent Movement Adder	(5)
Nominal System Voltage Range, Phase to Phase	**Exposed Movable Conductor**	**Exposed Fixed Circuit Part**		**Prohibited Approach Boundary[1]**
Less than 50	Not specified	Not specified	Not specified	Not specified
50 to 300	3.05 m (10 ft 0 in.)	1.07 m (3 ft 6 in.)	Avoid contact	Avoid contact
301 to 750	3.05 m (10 ft 0 in.)	1.07 m (3 ft 6 in.)	304.8 mm (1 ft 0 in.)	25.4 mm (0 ft 1 in.)
751 to 15 kV	3.05 m (10 ft 0 in.)	1.53 m (5 ft 0 in.)	660.4 mm (2 ft 2 in.)	177.8 mm (0 ft 7 in.)
15.1 kV to 36 kV	3.05 m (10 ft 0 in.)	1.83 m (6 ft 0 in.)	787.4 mm (2 ft 7 in.)	254 mm (0 ft 10 in.)
36.1 kV to 46 kV	3.05 m (10 ft 0 in.)	2.44 m (8 ft 0 in.)	838.2 mm (2 ft 9 in.)	431.8 mm (1 ft 5 in.)
46.1 kV to 72.5 kV	3.05 m (10 ft 0 in.)	2.44 m (8 ft 0 in.)	965.2 mm (3 ft 2 in.)	635 mm (2 ft 1 in.)
72.6 kV to 121 kV	3.25 m (10 ft 8 in.)	2.44 m (8 ft 0 in.)	991 mm (3 ft 3 in.)	812.8 mm (2 ft 8 in.)
138 kV to 145 kV	3.36 m (11 ft 0 in.)	3.05 m (10 ft 0 in.)	1.093 m (3 ft 7 in.)	939.8 mm (3 ft 1 in.)
161 kV to 169 kV	3.56 m (11 ft 8 in.)	3.56 m (11 ft 8 in.)	1.22 m (4 ft 0 in.)	1.07 m (3 ft 6 in.)
230 kV to 242 kV	3.97 m (13 ft 0 in.)	3.97 m (13 ft 0 in.)	1.6 m (5 ft 3 in.)	1.45 m (4 ft 9 in.)
345 kV to 362 kV	4.68 m (15 ft 4 in.)	4.68 m (15 ft 4 in.)	2.59 m (8 ft 6 in.)	2.44 m (8 ft 0 in.)
500 kV to 550 kV	5.8 m (19 ft 0 in.)	5.8 m (19 ft 0 in.)	3.43 m (11 ft 3 in.)	3.28 m (10 ft 9 in.)
765 kV to 800 kV	7.24 m (23 ft 9 in.)	7.24 m (23 ft 9 in.)	4.55 m (14 ft 11 in.)	4.4 m (14 ft 5 in.)

Note: For Flash Protection Boundary, see 130.3(A).
[1]See definition in Article 100 and text in 130.2(D)(2) and Annex C for elaboration.

(2) Entering the Limited Approach Boundary. Where there is a need for an unqualified person(s) to cross the Limited Approach Boundary, a qualified person shall advise him or her of the possible hazards and continuously escort the unqualified person(s) while inside the Limited Approach Boundary. Under no circumstance shall the escorted unqualified person(s) be permitted to cross the Restricted Approach Boundary.

130.3 Flash Hazard Analysis. A flash hazard analysis shall be done in order to protect personnel from the possibility of being injured by an arc flash. The analysis shall determine the Flash Protection Boundary and the personal protective equipment that people within the Flash Protection Boundary shall use.

(A) Flash Protection Boundary. For systems that are 600 volts or less, the Flash Protection Boundary shall be 4.0 ft, based on the product of clearing times of 6 cycles (0.1 second) and the available bolted fault current of 50 kA or any combination not exceeding 300 kA cycles (5000 ampere seconds). For clearing times and bolted fault currents other than 300 kA cycles, or under engineering supervision, the Flash Protection Boundary shall alternatively be permitted to be calculated in accordance with the following general formula:

$$D_c = \left[2.65 \times MVA_{bf} \times t\right]^{1/2}$$

or

$$D_c = \left[53 \times MVA \times t\right]^{1/2}$$

where:

D_c = distance in feet from an arc source for a second-degree burn
MVA_{bf} = bolted fault capacity available at point involved (in mega volt-amps)
MVA = capacity rating of transformer (mega volt-amps). For transformers with *MVA* ratings below 0.75 MVA, multiply the transformer *MVA* rating by 1.25
t = time of arc exposure (in seconds)

At voltage levels above 600 volts, the Flash Protection Boundary is the distance at which the incident energy equals 5 J/cm^2(1.2 cal/cm^2). For situations where fault-clearing time is 0.1 second (or faster), the Flash Protection Boundary is the distance at which the incident energy level equals 6.24 J/cm^2(1.5 cal/cm^2).

(B) Protective Clothing and Personal Protective Equipment for Application with a Flash Hazard Analysis. Where it has been determined that work will be performed within the Flash Protection Boundary by 130.3(A), the flash

Copyright National Fire Protection Association
Provided by IHS under license with NFPA
No reproduction or networking permitted without license from IHS
Not for Resale

hazard analysis shall determine, and the employer shall document, the incident energy exposure of the worker (in calories per square centimeter). The incident energy exposure level shall be based on the working distance of the employee's face and chest areas from a prospective arc source for the specific task to be performed. Flame-resistant (FR) clothing and personal protective equipment (PPE) shall be used by the employee based on the incident energy exposure associated with the specific task. Recognizing that incident energy increases as the distance from the arc flash decreases, additional PPE shall be used for any parts of the body that are closer than the distance at which the incident energy was determined As an alternative, the PPE requirements of 130.7(C)(9) shall be permitted to be used in lieu of the detailed flash hazard analysis approach described in 130.3(A).

FPN: For information on estimating the incident energy, see Annex D.

130.4 Test Instruments and Equipment Use. Only qualified persons shall perform testing work on or near live parts operating at 50 volts or more.

130.5 Work On or Near Uninsulated Overhead Lines.

(A) Uninsulated and Energized. Where work is performed in locations containing uninsulated energized overhead lines that are not guarded or isolated, precautions shall be taken to prevent employees from contacting such lines directly with any unguarded parts of their body or indirectly through conductive materials, tools, or equipment. Where the work to be performed is such that contact with uninsulated energized overhead lines is possible, the lines shall be deenergized and visibly grounded at the point of work, or suitably guarded.

(B) Deenergizing or Guarding. If the lines are to be deenergized, arrangements shall be made with the person or organization that operates or controls the lines to deenergize them and visibly ground them at the point of work. If arrangements are made to use protective measures, such as guarding, isolating, or insulation, these precautions shall prevent each employee from contacting such lines directly with any part of his or her body or indirectly through conductive materials, tools, or equipment.

(C) Employer and Employee Responsibility. The employer and employee shall be responsible for ensuring that guards or protective measures are satisfactory for the conditions. Employees shall comply with established work methods and the use of protective equipment.

(D) Approach Distances for Unqualified Persons. When employees without electrical training are working on the ground or in an elevated position near overhead lines, the location shall be such that the employee and the longest conductive object the employee might contact cannot come closer to any unguarded, energized overhead power line than the Limited Approach Boundary. If the voltage on the line exceeds 50 kV, the distance shall be 3.04 m (10 ft) plus 100 mm (4 in.) for every 10 kV over 50 kV.

FPN: Objects that are not insulated for the voltage involved should be considered to be conductive.

(E) Vehicular and Mechanical Equipment.

(1) Elevated Equipment. Where any vehicle or mechanical equipment structure will be elevated near energized overhead lines, they shall be operated so that the Limited Approach Boundary distance of Table 130.2(C), Column 2, is maintained. However, under any of the following conditions, the clearances shall be permitted to be reduced:

(1) If the vehicle is in transit with its structure lowered, the Limited Approach Boundary to overhead lines in Table 130.2(C), Column 2, shall be permitted to be reduced by 1.83 m (6 ft). If insulated barriers, rated for the voltages involved, are installed and they are not part of an attachment to the vehicle, the clearance shall be permitted to be reduced to the design working dimensions of the insulating barrier.
(2) If the equipment is an aerial lift insulated for the voltage involved, and if the work is performed by a qualified person, the clearance (between the uninsulated portion of the aerial lift and the power line) shall be permitted to be reduced to the Restricted Approach Boundary given in Table 130.2(C), Column 4.

(2) Equipment Contact. Employees standing on the ground shall not contact the vehicle or mechanical equipment or any of its attachments, unless either of the following conditions apply:

(1) The employee is using protective equipment rated for the voltage.
(2) The equipment is located so that no uninsulated part of its structure (that portion of the structure that provides a conductive path to employees on the ground) can come closer to the line than permitted in 130.5(E)(1).

(3) Equipment Grounding. If any vehicle or mechanical equipment capable of having parts of its structure elevated near energized overhead lines is intentionally grounded, employees working on the ground near the point of grounding shall not stand at the grounding location whenever there is a possibility of overhead line contact. Additional precautions, such as the use of barricades or insulation, shall be taken to protect employees from hazardous ground potentials (step and touch potential), which can develop within a few feet or more outward from the grounded point.

Copyright National Fire Protection Association
Provided by IHS under license with NFPA
No reproduction or networking permitted without license from IHS
Not for Resale

130.6 Other Precautions for Personnel Activities.

(A) Alertness.

(1) When Hazardous. Employees shall be instructed to be alert at all times when they are working near live parts operating at 50 volts or more and in work situations where unexpected electrical hazards might exist.

(2) When Impaired. Employees shall not knowingly be permitted to work in areas containing live parts parts operating at 50 volts or more or other electrical hazards while their alertness is recognizably impaired due to illness, fatigue, or other reasons.

(B) Blind Reaching. Employees shall be instructed not to reach blindly into areas that might contain exposed live parts where an electrical hazard exists.

(C) Illumination.

(1) General. Employees shall not enter spaces containing live parts unless illumination is provided that enables the employees to perform the work safely.

(2) Obstructed View of Work Area. Where lack of illumination or an obstruction precludes observation of the work to be performed, employees shall not perform any task near live parts operating at 50 volts or more or where an electrical hazard exists.

(D) Conductive Articles Being Worn. Conductive articles of jewelry and clothing (such as watchbands, bracelets, rings, key chains, necklaces, metalized aprons, cloth with conductive thread, metal headgear, or metal frame glasses) shall not be worn where they present an electrical contact hazard with exposed live parts.

(E) Conductive Materials, Tools, and Equipment Being Handled.

(1) General. Conductive materials, tools, and equipment that are in contact with any part of an employee's body shall be handled in a manner that prevents accidental contact with live parts. Such materials and equipment include, but are not limited to, long conductive objects, such as ducts, pipes and tubes, conductive hose and rope, metal-lined rules and scales, steel tapes, pulling lines, metal scaffold parts, structural members, bull floats, and chains.

(2) Approach to Live Parts. Means shall be employed to ensure that conductive materials approach exposed live parts no closer than that permitted by Table 130.2(C).

(F) Confined or Enclosed Work Spaces. When an employee works in a confined or enclosed space (such as a manhole or vault) that contains exposed live parts operating at 50 volts or more or an electrical hazard exists, the employer shall provide, and the employee shall use, protective shields, protective barriers, or insulating materials as necessary to avoid inadvertent contact with these parts. Doors, hinged panels, and the like shall be secured to prevent their swinging into an employee and causing the employee to contact exposed live parts operating at 50 volts or more or where an electrical hazard exists.

(G) Housekeeping Duties. Where live parts present an electrical contact hazard, employees shall not perform housekeeping duties inside the Limited Approach Boundary where there is a possibility of contact, unless adequate safeguards (such as insulating equipment or barriers) are provided to prevent contact. Electrically conductive cleaning materials (including conductive solids such as steel wool, metalized cloth, and silicone carbide, as well as conductive liquid solutions) shall not be used inside the Limited Approach Boundary unless procedures to prevent electrical contact are followed.

(H) Occasional Use of Flammable Materials. Where flammable materials are present only occasionally, electric equipment capable of igniting them may not be used, unless measures are taken to prevent hazardous conditions from developing. Such materials include, but are not limited to, flammable gases, vapors, or liquids; combustible dust; and ignitible fibers or flyings.

FPN: Electrical installation requirements for locations where flammable materials are present on a regular basis are contained in Article 440.

(I) Anticipating Failure. When there is evidence that electric equipment could fail and injure employees, the electric equipment shall be deenergized unless the employer can demonstrate that deenergizing introduces additional or increased hazards or is infeasible because of equipment design or operational limitation. Until the equipment is deenergized or repaired, employees shall be protected from hazards associated with the impending failure of the equipment.

(J) Routine Opening and Closing of Circuits. Load-rated switches, circuit breakers, or other devices specifically designed as disconnecting means shall be used for the opening, reversing, or closing of circuits under load conditions. Cable connectors not of the load-break type, fuses, terminal lugs, and cable splice connections shall not be permitted to be used for such purposes, except in an emergency.

(K) Reclosing Circuits After Protective Device Operation. After a circuit is deenergized by a circuit protective device, the circuit shall not be manually reenergized until it has been determined that the equipment and circuit can be safely energized. The repetitive manual reclosing of circuit breakers or reenergizing circuits through replaced fuses shall be prohibited. When it is determined from the design of the circuit and the overcurrent devices involved that the automatic operation of a device was caused by an overload rather than a fault condition, examination of the circuit or connected equipment shall not be required before the circuit is reenergized.

Copyright National Fire Protection Association
Provided by IHS under license with NFPA
No reproduction or networking permitted without license from IHS
Not for Resale

130.7 Personal and Other Protective Equipment.

(A) General. Employees working in areas where electrical hazards are present shall be provided with, and shall use, protective equipment that is designed and constructed for the specific part of the body to be protected and for the work to be performed.

(B) Care of Equipment. Protective equipment shall be maintained in a safe, reliable condition. The protective equipment shall be visually inspected before each use.

FPN: Specific requirements for periodic testing of electrical protective equipment are given in 130.7(C)(8) and 130.7(F).

(C) Personal Protective Equipment.

(1) General. When an employee is working within the Flash Protection Boundary he/she shall wear protective clothing and other personal protective equipment in accordance with 130.3.

(2) Movement and Visibility. When flame-resistant (FR) clothing is worn to protect an employee, it shall cover all ignitible clothing and shall allow for movement and visibility.

(3) Head, Face, Neck, and Chin Protection. Employees shall wear nonconductive head protection wherever there is a danger of head injury from electric shock or burns due to contact with live parts or from flying objects resulting from electrical explosion. Employees shall wear nonconductive protective equipment for the face, neck, and chin whenever there is a danger of injury from exposure to electric arcs or flashes or from flying objects resulting from electrical explosion.

FPN: See 130.7(C)(13)(b) for arc flash protective requirements.

(4) Eye Protection. Employees shall wear protective equipment for the eyes whenever there is danger of injury from electric arcs, flashes, or from flying objects resulting from electrical explosion.

(5) Body Protection. Employees shall wear FR clothing wherever there is possible exposure to an electric arc flash above the threshold incident-energy level for a second-degree burn, 5 J/cm^2 (1.2 cal/cm^2).

Exception: For incident-energy exposures 8.36 J/cm^2 (2 cal/cm^2) and below, employees may wear non-melting clothing described in Hazard/Risk Category 0 in Table 130.7(C)(11).

FPN: Such clothing can be provided as shirt and trousers, or as coveralls, or as a combination of jacket and trousers, or, for increased protection, as coveralls with jacket and trousers. Various weight fabrics are available. Generally, the higher degree of protection is provided by heavier weight fabrics and/or by layering combinations of one or more layers of FR clothing. In some cases one or more layers of FR clothing are worn over flammable, non-melting clothing. Non-melting, flammable clothing, used alone, can provide protection at low incident energy levels of 8.36 J/cm^2 (2.0 cal/cm^2) and below.

(6) Hand and Arm Protection. Employees shall wear rubber insulating gloves where there is danger of hand and arm injury from electric shock due to contact with live parts. Hand and arm protection shall be worn where there is possible exposure to arc flash burn. The apparel described in 130.7(C)(13)(c) shall be required for protection of hands from burns. Arm protection shall be accomplished by apparel described in 130.7(C)(5).

(7) Foot and Leg Protection. Where insulated footwear is used as protection against step and touch potential, dielectric overshoes shall be required. Insulated soles shall not be used as primary electrical protection.

(8) Standards for Personal Protective Equipment. Personal protective equipment shall conform to the standards given in Table 130.7(C)(8).

FPN: Non-FR or flammable fabrics are not covered by a standard in Table 130.7(C)(8). See 130.7(C)(14)(a), 130.7(C)(14)(b), and 130.7(C)(15).

Table 130.7(C)(8) Standards on Protective Equipment

Subject	Number and Title
Head protection	ANSI Z89.1, *Requirements for Protective Headwear for Industrial Workers*, 1997
Eye and face protection	ANSI Z87.1, *Practice for Occupational and Educational Eye and Face Protection,* 1998
Gloves	ASTM D 120-02, *Standard Specification for Rubber Insulating Gloves,* 2002
Sleeves	ASTM D 1051-02, *Standard Specification for Rubber Insulating Sleeves*, 2002
Gloves and sleeves	ASTM F 496-02, *Standard Specification for In-Service Care of Insulating Gloves and Sleeves*, 2002
Leather protectors	ASTM F 696-02, *Standard Specification for Leather Protectors for Rubber Insulating Gloves and Mittens*, 2002
Footwear	ASTM F 1117-98, *Standard Specification for Dielectric Overshoe Footwear,* 1998
	ANSI Z41, *Standard for Personnel Protection, Protective Footwear,* 1999
Visual inspection	ASTM F 1236-01, *Standard Guide for Visual Inspection of Electrical Protective Rubber Products,* 2001
Apparel	ASTM F 1506-02a, *Standard Performance Specification for Textile Material for Wearing Apparel for Use by Electrical Workers Exposed to Momentary Electric Arc and Related Thermal Hazards,* 2002a
Raingear	ASTM F 1891-02a, *Standard Specification for Arc and Flame Resistant Rainwear*, 2002a
Face protective products	ASTM F 2178-02, *Standard Test Method for Determining the Arc Rating of Face Protective Products*, 2002

Copyright National Fire Protection Association
Provided by IHS under license with NFPA
No reproduction or networking permitted without license from IHS
Not for Resale

(9) Selection of Personal Protective Equipment.

(a) When Required for Various Tasks. When selected in lieu of the flash hazard analysis of 130.3(A), Table 130.7(C)(9)(a) shall be used to determine the hazard/risk category for a task. The assumed short-circuit current capacities and fault clearing times for various tasks are listed in the text and notes to Table 130.7(C)(9)(a). For tasks not listed, or for power systems with greater than the assumed short-circuit current capacity or with longer than the assumed fault clearing times, a flash hazard analysis shall be required in accordance with 130.3.

FPN No. 1: Both larger and smaller available short-circuit currents could result in higher available arc-flash energies. If the available short-circuit current increases without a decrease in the opening time of the overcurrent protective device, the arc-flash energy will increase. If the available short-circuit current decreases, resulting in a longer opening time for the overcurrent protective device, arc-flash energies could also increase.

FPN No. 2: Energized parts that operate at less than 50 volts are not required to be de-energized to satisfy an "electrically safe work condition." Consideration should be given to the capacity of the source, any overcurrent protection between the energy source and the worker, and whether the work task related to the source operating at less than 50 volts increases exposure to electrical burns or to explosion from an electric arc.

Table 130.7(C)(9)(a) Hazard/Risk Category Classifications

Task (Assumes Equipment Is Energized, and Work Is Done Within the Flash Protection Boundary)	Hazard/ Risk Category	V-rated Gloves	V-rated Tools
Panelboards Rated 240 V and Below — Notes 1 and 3			
Circuit breaker (CB) or fused switch operation with covers on	0	N	N
CB or fused switch operation with covers off	0	N	N
Work on energized parts, including voltage testing	1	Y	Y
Remove/install CBs or fused switches	1	Y	Y
Removal of bolted covers (to expose bare, energized parts)	1	N	N
Opening hinged covers (to expose bare, energized parts)	0	N	N
Panelboards or Switchboards Rated >240 V and up to 600 V (with molded case or insulated case circuit breakers) — Notes 1 and 3			
CB or fused switch operation with covers on	0	N	N
CB or fused switch operation with covers off	1	N	N
Work on energized parts, including voltage testing	2*	Y	Y
600 V Class Motor Control Centers (MCCs) — Notes 2 (except as indicated) and 3			
CB or fused switch or starter operation with enclosure doors closed	0	N	N
Reading a panel meter while operating a meter switch	0	N	N
CB or fused switch or starter operation with enclosure doors open	1	N	N
Work on energized parts, including voltage testing	2*	Y	Y
Work on control circuits with energized parts 120 V or below, exposed	0	Y	Y
Work on control circuits with energized parts >120 V, exposed	2*	Y	Y
Insertion or removal of individual starter "buckets" from MCC — Note 4	3	Y	N
Application of safety grounds, after voltage test	2*	Y	N
Removal of bolted covers (to expose bare, energized parts)	2*	N	N
Opening hinged covers (to expose bare, energized parts)	1	N	N

Copyright National Fire Protection Association
Provided by IHS under license with NFPA
No reproduction or networking permitted without license from IHS
Not for Resale

Table 130.7(C)(9)(a) *Continued*

Task (Assumes Equipment Is Energized, and Work Is Done Within the Flash Protection Boundary)	Hazard/ Risk Category	V-rated Gloves	V-rated Tools
600 V Class Switchgear (with power circuit breakers or fused switches) — Notes 5 and 6			
CB or fused switch operation with enclosure doors closed	0	N	N
Reading a panel meter while operating a meter switch	0	N	N
CB or fused switch operation with enclosure doors open	1	N	N
Work on energized parts, including voltage testing	2*	Y	Y
Work on control circuits with energized parts 120 V or below, exposed	0	Y	Y
Work on control circuits with energized parts >120 V, exposed	2*	Y	Y
Insertion or removal (racking) of CBs from cubicles, doors open	3	N	N
Insertion or removal (racking) of CBs from cubicles, doors closed	2	N	N
Application of safety grounds, after voltage test	2*	Y	N
Removal of bolted covers (to expose bare, energized parts)	3	N	N
Opening hinged covers (to expose bare, energized parts)	2	N	N
Other 600 V Class (277 V through 600 V, nominal) Equipment — Note 3			
Lighting or small power transformers (600 V, maximum)	—	—	—
Removal of bolted covers (to expose bare, energized parts)	2*	N	N
Opening hinged covers (to expose bare, energized parts)	1	N	N
Work on energized parts, including voltage testing	2*	Y	Y
Application of safety grounds, after voltage test	2*	Y	N
Revenue meters (kW-hour, at primary voltage and current)	—	—	—
Insertion or removal	2*	Y	N
Cable trough or tray cover removal or installation	1	N	N
Miscellaneous equipment cover removal or installation	1	N	N
Work on energized parts, including voltage testing	2*	Y	Y
Application of safety grounds, after voltage test	2*	Y	N
NEMA E2 (fused contactor) Motor Starters, 2.3 kV Through 7.2 kV			
Contactor operation with enclosure doors closed	0	N	N
Reading a panel meter while operating a meter switch	0	N	N
Contactor operation with enclosure doors open	2*	N	N
Work on energized parts, including voltage testing	3	Y	Y
Work on control circuits with energized parts 120 V or below, exposed	0	Y	Y
Work on control circuits with energized parts >120 V, exposed	3	Y	Y
Insertion or removal (racking) of starters from cubicles, doors open	3	N	N
Insertion or removal (racking) of starters from cubicles, doors closed	2	N	N
Application of safety grounds, after voltage test	3	Y	N
Removal of bolted covers (to expose bare, energized parts)	4	N	N
Opening hinged covers (to expose bare, energized parts)	3	N	N

Copyright National Fire Protection Association
Provided by IHS under license with NFPA
No reproduction or networking permitted without license from IHS
Not for Resale

Table 130.7(C)(9)(a) ***Continued***

Task (Assumes Equipment Is Energized, and Work Is Done Within the Flash Protection Boundary)	Hazard/ Risk Category	V-rated Gloves	V-rated Tools
Metal Clad Switchgear, 1 kV and Above			
CB or fused switch operation with enclosure doors closed	2	N	N
Reading a panel meter while operating a meter switch	0	N	N
CB or fused switch operation with enclosure doors open	4	N	N
Work on energized parts, including voltage testing	4	Y	Y
Work on control circuits with energized parts 120 V or below, exposed	2	Y	Y
Work on control circuits with energized parts >120 V, exposed	4	Y	Y
Insertion or removal (racking) of CBs from cubicles, doors open	4	N	N
Insertion or removal (racking) of CBs from cubicles, doors closed	2	N	N
Application of safety grounds, after voltage test	4	Y	N
Removal of bolted covers (to expose bare, energized parts)	4	N	N
Opening hinged covers (to expose bare, energized parts)	3	N	N
Opening voltage transformer or control power transformer compartments	4	N	N
Other Equipment 1 kV and Above			
Metal clad load interrupter switches, fused or unfused	—	—	—
Switch operation, doors closed	2	N	N
Work on energized parts, including voltage testing	4	Y	Y
Removal of bolted covers (to expose bare, energized parts)	4	N	N
Opening hinged covers (to expose bare, energized parts)	3	N	N
Outdoor disconnect switch operation (hookstick operated)	3	Y	Y
Outdoor disconnect switch operation (gang-operated, from grade)	2	N	N
Insulated cable examination, in manhole or other confined space	4	Y	N
Insulated cable examination, in open area	2	Y	N

Note:

V-rated Gloves are gloves rated and tested for the maximum line-to-line voltage upon which work will be done.

V-rated Tools are tools rated and tested for the maximum line-to-line voltage upon which work will be done.

2* means that a double-layer switching hood and hearing protection are required for this task in addition to the other Hazard/Risk Category 2 requirements of Table 130.7(C)(10).

Y = yes (required)

N = no (not required)

Notes:

1. 25 kA short circuit current available, 0.03 second (2 cycle) fault clearing time.
2. 65 kA short circuit current available, 0.03 second (2 cycle) fault clearing time.
3. For < 10 kA short circuit current available, the hazard/risk category required may be reduced by one number.
4. 65 kA short circuit current available, 0.33 second (20 cycle) fault clearing time.
5. 65 kA short circuit current available, up to 1.0 second (60 cycle) fault clearing time.
6. For < 25 kA short circuit current available, the hazard/risk category required may be reduced by one number.

Copyright National Fire Protection Association
Provided by IHS under license with NFPA
No reproduction or networking permitted without license from IHS
Not for Resale

(10) Protective Clothing and Personal Protective Equipment Matrix. Once the Hazard/Risk Category has been identified, Table 130.7(C)(10) shall be used to determine the required personal protective equipment (PPE) for the task. Table 130.7(C)(10) lists the requirements for protective clothing and other protective equipment based on Hazard/Risk Category numbers 0 through 4. This clothing and equipment shall be used when working on or near energized equipment within the Flash Protection Boundary.

FPN No. 1: See Annex H for a suggested simplified approach to ensure adequate PPE for electrical workers within facilities with large and diverse electrical systems.

FPN No. 2: The PPE requirements of this section are intended to protect a person from arc-flash and shock hazards. While some situations could result in burns to the skin, even with the protection described in Table 130.7(C)(10), burn injury should be reduced and survivable. Due to the explosive effect of some arc events, physical trauma injuries could occur. The PPE requirements of this section do not provide protection against physical trauma other than exposure to the thermal effects of an arc flash.

(11) Protective Clothing Characteristics. Table 130.7(C)(11) lists examples of protective clothing systems and typical characteristics including the degree of protection for various clothing. The protective clothing selected for the corresponding hazard/risk category number shall have an arc rating of at least the value listed in the last column of Table 130.7(C)(11).

FPN: The arc rating for a particular clothing system can be obtained from the FR clothing manufacturer.

(12) Factors in Selection of Protective Clothing. Clothing and equipment that provide worker protection from shock and arc flash hazards shall be utilized. Clothing and equipment required for the degree of exposure shall be permitted to be worn alone or integrated with flammable, nonmelting apparel. If FR clothing is required, it shall cover associated parts of the body as well as all flammable apparel while allowing movement and visibility. All personal protective equipment shall be maintained in a sanitary and functionally effective condition. Personal protective equipment items will normally be used in conjunction with one another as a system to provide the appropriate level of protection.

FPN: Protective clothing includes shirts, pants, coveralls, jackets, and parkas worn routinely by workers who, under normal working conditions, are exposed to momentary electric arc and related thermal hazards. Flame-resistant rainwear worn in inclement weather is included in this category of clothing.

(a) Layering. Nonmelting, flammable fiber garments shall be permitted to be used as underlayers in conjunction with FR garments in a layered system for added protection. If nonmelting, flammable fiber garments are used as underlayers, the system arc rating shall be sufficient to prevent breakopen of the innermost FR layer at the expected arc exposure incident energy level to prevent ignition of flammable underlayers.

FPN: A typical layering system might include cotton underwear, a cotton shirt and trouser, and a FR coverall. Specific tasks might call for additional FR layers to achieve the required protection level.

(b) Outer Layers. Garments worn as outer layers over FR clothing, such as jackets or rainwear, shall also be made from FR material.

(c) Underlayers. Meltable fibers such as acetate, nylon, polyester, polypropylene, and spandex shall not be permitted in fabric underlayers (underwear) next to the skin.

Exception: An incidental amount of elastic used on nonmelting fabric underwear or socks shall be permitted.

FPN No. 1: FR garments (e.g., shirts, trousers, and coveralls) worn as underlayers that neither ignite nor melt and drip in the course of an exposure to electric arc and related thermal hazards generally provide a higher system arc rating than nonmelting, flammable fiber underlayers.

FPN No. 2: FR underwear or undergarments used as underlayers generally provide a higher system arc rating than nonmelting, flammable fiber underwear or undergarments used as underlayers.

(d) Coverage. Clothing shall cover potentially exposed areas as completely as possible. Shirt sleeves shall be fastened at the wrists, and shirts and jackets shall be closed at the neck.

(e) Fit. Tight-fitting clothing shall be avoided. Loose-fitting clothing provides additional thermal insulation because of air spaces. FR apparel shall fit properly such that it does not interfere with the work task.

(f) Interference. The garment selected shall result in the least interference with the task but still provide the necessary protection. The work method, location, and task could influence the protective equipment selected.

(13) Arc Flash Protective Equipment.

(a) Flash Suits. Flash suit design shall permit easy and rapid removal by the wearer. The entire flash suit, including the hood's face shield, shall have an arc rating that is suitable for the arc flash exposure. When exterior air is supplied into the hood, the air hoses and pump housing shall be either covered by FR materials or constructed of nonmelting and nonflammable materials.

(b) Face Protection. Face shields shall have an arc rating suitable for the arc flash exposure. Face shields without an arc rating shall not be used. Eye protection (safety glasses or goggles) shall always be worn under face shields or hoods.

FPN: Face shields made with energy-absorbing formulations that can provide higher levels of protection from the radiant energy of an arc flash are available, but these shields are tinted and can reduce visual acuity. Additional illumination of the task area might be necessary when these types of arc protective face shields are used.

Copyright National Fire Protection Association
Provided by IHS under license with NFPA
No reproduction or networking permitted without license from IHS
Not for Resale

Table 130.7(C)(10) Protective Clothing and Personal Protective Equipment (PPE) Matrix

Protective Clothing and Equipment	Protective Systems for Hazard/Risk Category					
Hazard/Risk Category Number	**–1 (Note 3)**	**0**	**1**	**2**	**3**	**4**
Non-melting (according to ASTM F 1506-00) or Untreated Natural Fiber						
a. T-shirt (short-sleeve)	X			X	X	X
b. Shirt (long-sleeve)		X				
c. Pants (long)	X	X	X (Note 4)	X (Note 6)	X	X
FR Clothing (Note 1)						
a. Long-sleeve shirt			X	X	X (Note 9)	X
b. Pants			X (Note 4)	X (Note 6)	X (Note 9)	X
c. Coverall			(Note 5)	(Note 7)	X (Note 9)	(Note 5)
d. Jacket, parka, or rainwear			AN	AN	AN	AN
FR Protective Equipment						
a. Flash suit jacket (multilayer)						X
b. Flash suit pants (multilayer)						X
c. Head protection						
1. Hard hat			X	X	X	X
2. FR hard hat liner					AR	AR
d. Eye protection		—	—	—	—	—
1. Safety glasses	X	X	X	AL	AL	AL
2. Safety goggles				AL	AL	AL
e. Face and head area protection		—	—	—	—	—
1. Arc-rated face shield, or flash suit hood				X (Note 8)		
2. Flash suit hood					X	X
3. Hearing protection (ear canal inserts)				X (Note 8)	X	X
f. Hand protection			—	—	—	—
Leather gloves (Note 2)			AN	X	X	X
g. Foot protection						
Leather work shoes			AN	X	X	X

AN = As needed
AL = Select one in group
AR = As required
X = Minimum required
Notes:
1. See Table 130.7(C)(11). Arc rating for a garment is expressed in cal/cm^2.
2. If voltage-rated gloves are required, the leather protectors worn external to the rubber gloves satisfy this requirement.
3. Hazard/Risk Category Number "–1" is only defined if determined by Notes 3 or 6 of Table 130.7(C)(9)(a).
4. Regular weight (minimum 12 oz/yd^2 fabric weight), untreated, denim cotton blue jeans are acceptable in lieu of FR pants. The FR pants used for Hazard/Risk Category 1 shall have a minimum arc rating of 4.
5. Alternate is to use FR coveralls (minimum arc rating of 4) instead of FR shirt and FR pants.
6. If the FR pants have a minimum arc rating of 8, long pants of non-melting or untreated natural fiber are not required beneath the FR pants.
7. Alternate is to use FR coveralls (minimum arc rating of 4) over non-melting or untreated natural fiber pants and T-shirt.
8. A faceshield with a minimum arc rating of 8, with wrap-around guarding to protect not only the face, but also the forehead, ears, and neck (or, alternatively, a flash suit hood), is required.
9. Alternate is to use two sets of FR coveralls (the inner with a minimum arc rating of 4 and outer coverall with a minimum arc rating of 5) over non-melting or untreated natural fiber clothing, instead of FR coveralls over FR shirt and FR pants over non-melting or untreated natural fiber clothing.

Copyright National Fire Protection Association
Provided by IHS under license with NFPA
No reproduction or networking permitted without license from IHS
Not for Resale

Table 130.7(C)(11) Protective Clothing Characteristics

Typical Protective Clothing Systems		
Hazard/Risk Category	**Clothing Description (Typical number of clothing layers is given in parentheses)**	**Required Minimum Arc Rating of PPE [J/cm^2(cal/cm^2)]**
0	Non-melting, flammable materials (i.e., untreated cotton, wool, rayon, or silk, or blends of these materials) with a fabric weight at least 4.5 oz/yd^2 (1)	N/A
1	FR shirt and FR pants or FR coverall (1)	16.74 (4)
2	Cotton underwear — conventional short sleeve and brief/shorts, plus FR shirt and FR pants (1 or 2)	33.47 (8)
3	Cotton underwear plus FR shirt and FR pants plus FR coverall, or cotton underwear plus two FR coveralls (2 or 3)	104.6 (25)
4	Cotton underwear plus FR shirt and FR pants plus multilayer flash suit (3 or more)	167.36 (40)

Note: Arc rating is defined in Article 100 and can be either ATPV or E_{BT}. ATPV is defined in ASTM F 1959-99 as the incident energy on a fabric or material that results in sufficient heat transfer through the fabric or material to cause the onset of a second-degree burn based on the Stoll curve. E_{BT} is defined in ASTM F 1959-99 as the average of the five highest incident energy exposure values below the Stoll curve where the specimens do not exhibit breakopen. E_{BT} is reported when ATPV cannot be measured due to FR fabric breakopen.

(c) Hand Protection. Leather or FR gloves shall be worn where required for arc flash protection. Where insulating rubber gloves are used for shock protection, leather protectors shall be worn over the rubber gloves.

FPN: Insulating rubber gloves and gloves made from layers of flame-resistant material provide hand protection against the arc flash hazard. Heavy-duty leather (e.g., greater than 12 oz/yd^2) gloves provide protection suitable up to Hazard/Risk Category 2. The leather protectors worn over insulating rubber gloves provide additional arc flash protection for the hands. During high arc flash exposures leather can shrink and cause a decrease in protection.

(d) Foot Protection. Heavy-duty leather work shoes provide some arc flash protection to the feet and shall be used in all tasks in Hazard/Risk Category 2 and higher.

(14) Clothing Material Characteristics. FR clothing shall meet the requirements described in 130.7(C)(14)(a) through 130.7(C)(15).

FPN: FR materials, such as flame-retardant treated cotton, meta-aramid, para-aramid, and poly-benzimidazole (PBI) fibers, provide thermal protection. These materials can ignite but will not continue to burn after the ignition source is removed. FR fabrics can reduce burn injuries during an arc flash exposure by providing a thermal barrier between the arc flash and the wearer. In aramid and PBI blends, para-aramid adds strength to a fabric to prevent the fabric from breaking open due to the blast shock wave and high thermal energy of the arc.

(a) Melting. Clothing made from flammable synthetic materials that melt at temperatures below 315°C (600°F), such as acetate, nylon, polyester, polypropylene, and spandex, either alone or in blends, shall not be used.

FPN: These materials melt as a result of arc flash exposure conditions, form intimate contact with the skin, and aggravate the burn injury.

Exception: Fiber blends that contain materials that melt, such as acetate, nylon, polyester, polypropylene, and spandex, shall be permitted if such blends in fabrics meet the requirements of ASTM F 1506, Standard Performance Specification for Textile Material for Wearing Apparel for Use by Electrical Workers Exposed to Momentary Electric Arc and Related Thermal Hazards, and if such blends in fabrics do not exhibit evidence of a melting and sticking hazard during arc testing according to ASTM F 1959 [see also 130.7(C)(15)]. Non–flame-resistant synthetic materials, such as acetate, nylon, polyester, rayon, either alone or in blends with non–flame-resistant cotton, can melt into the skin when exposed to high temperatures and aggravate the burn injury.

(b) Flammability. Clothing made from nonmelting flammable natural materials, such as cotton, wool, rayon, or silk, shall be permitted for Hazard/Risk Categories 0 and –1 considered acceptable if it is determined by flash hazard analysis that the exposure level is 8.36 J/cm^2 (2.0 cal/cm^2) or less, and that the fabric will not ignite and continue to burn under the arc exposure hazard conditions to which it will be exposed (using data from tests done in accordance with ASTM F 1958.) See also 130.7(C)(12)(a) for layering requirements.

FPN No. 1: Non-FR cotton, polyester-cotton blends, nylon, nylon-cotton blends, silk, rayon, and wool fabrics are flammable. These fabrics could ignite and continue to burn on the body, resulting in serious burn injuries.

FPN No. 2: Rayon is a cellulose-based (wood pulp) synthetic fiber that is a flammable but nonmelting material.

Copyright National Fire Protection Association
Provided by IHS under license with NFPA
No reproduction or networking permitted without license from IHS
Not for Resale

(15) Clothing Not Permitted. Clothing made from materials that do not meet the requirements of 130.7(C)(14)(a) regarding melting, or made from materials that do not meet the flammability requirements of 130.7(C)(14)(b), shall not be permitted to be worn.

FPN: Some flame-resistant fabrics, such as non-FR modacrylic and nondurable flame-retardant treatments of cotton, are not recommended for industrial electrical or utility applications.

Exception: Non-melting, flammable (non-FR) materials shall be permitted to be used as underlayers to FR clothing, as described in 130.7(C)(14)(a) and also shall be permitted to be used for Hazard/Risk Category 0 and –1 as described in Table 130.7(C)(10).

(16) Care and Maintenance of FR Clothing and FR Flash Suits.

(a) Inspection. FR apparel shall be inspected before each use. Work clothing or flash suits that are contaminated, or damaged to the extent their protective qualities are impaired, shall not be used. Protective items that become contaminated with grease, oil, or flammable liquids or combustible materials shall not be used.

(b) Manufacturer's Instructions. The garment manufacturer's instructions for care and maintenance of FR apparel shall be followed.

(D) Other Protective Equipment.

(1) Insulated Tools and Equipment. Employees shall use insulated tools and/or handling equipment when working inside the Limited Approach Boundary of exposed live parts where tools or handling equipment might make accidental contact. Insulated tools shall be protected from damage to the insulating material.

FPN: See 130.2(B) for working on exposed live parts.

(a) Requirements for Insulated Tools. The following requirements shall apply to insulated tools:

(1) Insulated tools shall be rated for the voltages on which they are used.
(2) Insulated tools shall be designed and constructed for the environment to which they are exposed and the manner in which they are used.

(b) Fuse or Fuse Holding Equipment. Fuse or fuse holder handling equipment, insulated for the circuit voltage, shall be used to remove or install a fuse if the fuse terminals are energized.

(c) Ropes and Handlines. Ropes and handlines used near exposed live parts operating at 50 volts or more, or used where an electrical hazard exists, shall be nonconductive.

(d) Fiberglass-Reinforced Plastic Rods. Fiberglass-reinforced plastic rod and tube used for live line tools shall meet the requirements of ASTM F 711, *Standard Specification for Fiberglass-Reinforced Plastic (FRP) Rod and Tube Used; in Live Line Tools*, 1989 (R 1997).

(e) Portable Ladders. Portable ladders shall have nonconductive side rails if they are used where the employee or ladder could contact exposed live parts operating at 50 volts or more or where an electrical hazard exists. Nonconductive ladders shall meet the requirements of ANSI standards for ladders listed in Table 130.7(F).

(f) Protective Shields. Protective shields, protective barriers, or insulating materials shall be used to protect each employee from shock, burns, or other electrically related injuries while that employee is working near live parts that might be accidentally contacted or where dangerous electric heating or arcing might occur. When normally enclosed live parts are exposed for maintenance or repair, they shall be guarded to protect unqualified persons from contact with the live parts.

(g) Rubber Insulating Equipment. Rubber insulating equipment used for protection from accidental contact with live parts shall meet the requirements of the ASTM standards listed in Table 130.7(F).

(h) Voltage Rated Plastic Guard Equipment. Plastic guard equipment for protection of employees from accidental contact with live parts, or for protection of employees or energized equipment or material from contact with ground, shall meet the requirements of the ASTM standards listed in Table 130.7(F).

(i) Physical or Mechanical Barriers. Physical or mechanical (field fabricated) barriers shall be installed no closer than the restricted approach distance given in Table 130.2(C). While the barrier is being installed, the restrictive approach distance specified in Table 130.2(C) shall be maintained, or the live parts shall be placed in an electrically safe work condition.

(E) Alerting Techniques.

(1) Safety Signs and Tags. Safety signs, safety symbols, or accident prevention tags shall be used where necessary to warn employees about electrical hazards that might endanger them. Such signs and tags shall meet the requirements of ANSI Standard Z535 given in Table 130.7(F).

(2) Barricades. Barricades shall be used in conjunction with safety signs where it is necessary to prevent or limit employee access to work areas containing live parts. Conductive barricades shall not be used where it might cause an electrical hazard. Barricades shall be placed no closer than the Limited Approach Boundary given in Table 130.2(C).

Copyright National Fire Protection Association
Provided by IHS under license with NFPA
No reproduction or networking permitted without license from IHS
Not for Resale

(3) Attendants. If signs and barricades do not provide sufficient warning and protection from electrical hazards, an attendant shall be stationed to warn and protect employees. The primary duty and responsibility of an attendant providing manual signaling and alerting shall be to keep unqualified employees outside a work area where the unqualified employee might be exposed to electrical hazards. An attendant shall remain in the area as long as there is a potential for employees to be exposed to the electrical hazards.

(F) Standards for Other Protective Equipment. Other protective equipment required in 130.7(D) shall conform to the standards given in Table 130.7(F).

Table 130.7(F) Standards on Other Protective Equipment

Subject	Number and Title
Ladders	ANSI A14.1, *Safety Requirements for Portable Wood Ladders,* 1994 ANSI A14.3, *Safety Requirements for Fixed Ladders,* 2002 ANSI A14.4, *Safety Requirements for Job-Made Ladders,* 1992 ANSI A14.5, *Safety Requirement for Portable Reinforced Plastic Ladders,* 2000
Safety signs and tags	ANSI Z535, *Series of Standards for Safety Signs and Tags,* 1998
Blankets	ASTM D 1048, *Standard Specification for Rubber Insulating Blankets,* 1999
Covers	ASTM D 1049, *Standard Specification for Rubber Covers,* 1998
Line hoses	ASTM D 1050, *Standard Specification for Rubber Insulating Line Hoses,* 1990
Line hoses and covers	ASTM F 478, *Standard Specification for In-Service Care of Insulating Line Hose and Covers,* 1999
Blankets	ASTM F 479, *Standard Specification for In-Service Care of Insulating Blankets,* 1995
Fiberglass tools/ ladders	ASTM F 711, *Standard Specification for Fiberglass-Reinforced Plastic (FRP) Rod and Tube Used; in Line Tools,* 1989 (R 1997)
Plastic guards	ASTM F 712, *Standard Test Methods for Electrically Insulating Plastic Guard Equipment for Protection of Workers,* 1995
Temporary grounding	ASTM F 855, *Standard Specification for Temporary Protective Grounds to Be Used on De-energized Electric Power Lines and Equipment,* 1997
Insulated hand tools	ASTM F 1505, *Standard Specification for Insulated and Insulating Hand Tools,* 2001

Copyright National Fire Protection Association
Provided by IHS under license with NFPA
No reproduction or networking permitted without license from IHS
Not for Resale

Chapter 2 Safety-Related Maintenance Requirements

ARTICLE 200
Introduction

200.1 Scope. Chapter 2 addresses the following requirements:

(1) Chapter 2 covers practical safety-related maintenance requirements for electrical equipment and installations in workplaces as included in 90.1. These requirements identify only that maintenance directly associated with employee safety.
(2) Chapter 2 does not prescribe specific maintenance methods or testing procedures. It is left to the employer to choose from the various maintenance methods available to satisfy the requirements of Chapter 2.
(3) For the purpose of Chapter 2, maintenance shall be defined as preserving or restoring the condition of electrical equipment and installations, or parts of either, for the safety of employees who work on, near, or with such equipment. Repair or replacement of individual portions or parts of equipment shall be permitted without requiring modification or replacement of other portions or parts that are in a safe condition.

FPN: Refer to NFPA 70B, *Recommended Practice for Electrical Equipment Maintenance*, for specific maintenance methods and tests.

ARTICLE 205
General Maintenance Requirements

205.1 Qualified Persons. Employees who perform maintenance on electrical equipment and installations shall be qualified persons as required in Chapter 1 and shall be trained in, and familiar with, the specific maintenance procedures and tests required.

205.2 Single Line Diagram. A single line diagram, where provided, for the electrical system shall be maintained.

205.3 Spaces About Electrical Equipment. All working space and clearances required in Chapter 4 shall be maintained.

205.4 Grounding and Bonding. Equipment, raceway, cable tray, and enclosure bonding and grounding shall be maintained to ensure electrical continuity.

205.5 Guarding of Live Parts. Enclosures shall be maintained to guard against accidental contact with live parts and other electrical hazards.

205.6 Safety Equipment. Locks, interlocks, and other safety equipment shall be maintained in proper working condition to accomplish the control purpose.

205.7 Clear Spaces. Access to working space and escape passages shall be kept clear and unobstructed.

205.8 Identification of Components. Identification of components, where required, and safety-related instructions (operating or maintenance), if posted, shall be securely attached and maintained in legible condition.

205.9 Warning Signs. Warning signs, where required, shall be visible, securely attached, and maintained in legible condition.

205.10 Identification of Circuits. Circuit or voltage identification shall be securely affixed and maintained in updated and legible condition.

205.11 Single and Multiple Conductors and Cables. Electrical cables and single and multiple conductors shall be maintained free of damage, shorts, and ground that would present a hazard to employees.

205.12 Flexible Cords and Cables. Flexible cords and cables shall be maintained to avoid strain and damage.

(1) Damaged Cords and Cables. Cords and cables shall not have worn, frayed, or damaged areas that present an electrical hazard to employees.

(2) Strain Relief. Strain relief of cords and cables shall be maintained to prevent pull from being transmitted directly to joints or terminals.

ARTICLE 210
Substations, Switchgear Assemblies, Switchboards, Panelboards, Motor Control Centers, and Disconnect Switches

210.1 Enclosures. Enclosures shall be kept free of material that would create a hazard.

Copyright National Fire Protection Association
Provided by IHS under license with NFPA
No reproduction or networking permitted without license from IHS
Not for Resale

210.2 Area Enclosures. Fences, physical protection, enclosures, or other protective means, where required to guard against unauthorized access or accidental contact with exposed live parts, shall be maintained.

210.3 Conductors. Current-carrying conductors (buses, switches, disconnects, joints, and terminations) and bracing shall be maintained to:

(1) Conduct rated current without overheating
(2) Withstand available fault current

210.4 Insulation Integrity. Insulation integrity shall be maintained to support the voltage impressed.

210.5 Protective Devices. Protective devices shall be maintained to adequately withstand or interrupt available fault current.

ARTICLE 215
Premises Wiring

215.1 Covers for Wiring System Components. Covers for wiring system components shall be in place with all associated hardware, and there shall be no unprotected openings.

215.2 Open Wiring Protection. Open wiring protection, such as location or barriers, shall be maintained to prevent accidental contact.

215.3 Raceways and Cable Trays. Raceways and cable trays shall be maintained to provide physical protection and support for conductors.

ARTICLE 220
Controller Equipment

220.1 Scope. This article shall apply to controllers, including electrical equipment that governs the starting, stopping, direction of motion, acceleration, speed, and protection of rotating equipment and other power utilization apparatus in the workplace.

220.2 Protection and Control Circuitry. Protection and control circuitry used to guard against accidental contact with live parts and to prevent other electrical or mechanical hazards shall be maintained.

ARTICLE 225
Fuses and Circuit Breakers

225.1 Fuses. Fuses shall be maintained free of breaks or cracks in fuse cases, ferrules, and insulators. Fuse clips shall be maintained to provide adequate contact with fuses.

225.2 Molded-Case Circuit Breakers. Molded-case circuit breakers shall be maintained free of cracks in cases and cracked or broken operating handles.

225.3 Circuit Breaker Testing. Circuit breakers that interrupt faults approaching their ratings shall be inspected and tested in accordance with the manufacturer's instructions.

ARTICLE 230
Rotating Equipment

230.1 Terminal Boxes. Terminal chambers, enclosures, and terminal boxes shall be maintained to guard against accidental contact with live parts and other electrical hazards.

230.2 Guards, Barriers, and Access Plates. Guards, barriers, and access plates shall be maintained to prevent employees from contacting moving or energized parts.

ARTICLE 235
Hazardous (Classified) Locations

235.1 Scope. This article covers maintenance requirements in those areas identified as hazardous (classified) locations in accordance with Article 440 of this standard.

FPN: These locations require special types of equipment and installation that ensure safe performance under conditions of proper use and maintenance. It is important that inspection authorities and users exercise more than ordinary care with regard to installation and maintenance. The maintenance requirements for specific equipment and materials covered elsewhere in Chapter 2 are applicable to hazardous (classified) locations. Other maintenance is required to ensure that the form of construction and of installation that makes the equipment and materials suitable for the particular location are not nullified.

Copyright National Fire Protection Association
Provided by IHS under license with NFPA
No reproduction or networking permitted without license from IHS
Not for Resale

The maintenance required for specific hazardous (classified) locations requires that the classification of the specific location be known. The design principles and equipment characteristics — for example, use of positive pressure ventilation, explosionproof, nonincendive, intrinsically safe, and purged and pressurized equipment — that were applied in the installation to meet the requirements of the area classification must also be known. With this information, the employer and the inspection authority are able to determine whether the installation as maintained has retained the condition necessary for a safe workplace.

235.2 Maintenance Requirements for Hazardous (Classified) Locations. Equipment and installations in these locations shall be maintained such that the following apply:

(1) No energized parts are exposed.

Exception to (1): Intrinsically safe and nonincendive circuits.

(2) There are no breaks in conduit systems, fittings, or enclosures from damage, corrosion, or other causes.

(3) All bonding jumpers are securely fastened and intact.

(4) All fittings, boxes, and enclosures with bolted covers have all bolts installed and bolted tight.

(5) All threaded conduit shall be wrenchtight and enclosure covers shall be tightened in accordance with the manufacturer's instructions.

(6) There are no open entries into fittings, boxes, or enclosures that would compromise the protection characteristics.

(7) All close-up plugs, breathers, seals, and drains are securely in place.

(8) Marking of luminaires (lighting fixtures) for maximum lamp wattage and temperature rating is legible and not exceeded.

(9) Required markings are secure and legible.

ARTICLE 240
Batteries and Battery Rooms

240.1 Ventilation. Ventilation systems, forced or natural, shall be maintained to prevent buildup of explosive mixtures. This maintenance shall include a functional test of any associated detection and alarm systems.

240.2 Eye and Body Wash Apparatus. Eye and body wash apparatus shall be maintained in operable condition.

240.3 Cell Flame Arresters and Cell Ventilation. Battery cell ventilation openings shall be unobstructed, and cell flame arresters shall be maintained.

ARTICLE 245
Portable Electric Tools and Equipment

245.1 Maintenance Requirements for Portable Electric Tools and Equipment. Attachment plugs, receptacles, cover plates, and cord connectors shall be maintained such that the following apply:

(1) There are no breaks, damage, or cracks exposing live parts.
(2) There are no missing cover plates.
(3) Terminations have no stray strands or loose terminals.
(4) There are no missing, loose, altered, or damaged blades, pins, or contacts.
(5) Polarity is correct.

ARTICLE 250
Personal Safety and Protective Equipment

250.1 Maintenance Requirements for Personal Safety and Protective Equipment. Personal safety and protective equipment such as the following shall be maintained in a safe working condition:

(1) Grounding equipment
(2) Hot sticks
(3) Rubber gloves, sleeves, and leather protectors
(4) Voltage test indicators
(5) Blanket and similar insulating equipment
(6) Insulating mats and similar insulating equipment
(7) Protective barriers
(8) External circuit breaker rack-out devices
(9) Portable lighting units
(10) Safety grounding equipment
(11) Dielectric footwear
(12) Protective clothing

250.2 Inspection and Testing of Protective Equipment and Protective Tools.

(A) Visual. Safety and protective equipment and protective tools shall be visually inspected for damage and defects before initial use and at intervals thereafter as service conditions require, but in no case shall the interval exceed 1 year.

(B) Testing. The insulation of protective equipment and protective tools, such as items (1) through (12) of 250.1, shall be verified by the appropriate test and visual inspection to ascertain that insulating capability has been retained before initial use, and at intervals thereafter as service conditions and applicable standards and instructions require, but in no case shall the interval exceed 3 years.

Copyright National Fire Protection Association
Provided by IHS under license with NFPA
No reproduction or networking permitted without license from IHS
Not for Resale

250.3 Safety Grounding Equipment.

(A) Visual. Personal protective ground cable sets shall be inspected for cuts in the protective sheath and damage to the conductors. Clamps and connector strain relief devices shall be checked for tightness. These inspections shall be made at intervals thereafter as service conditions require, but in no case shall the interval exceed 1 year.

(B) Testing. Prior to being returned to service, safety grounds that have been repaired or modified shall be tested to ascertain that 30- and 15-cycle maximum voltage drop values are not exceeded for the rating of the ground set. These tests shall be conducted at intervals as service conditions and applicable required standards and instructions require, but in no case shall the interval exceed 3 years.

Copyright National Fire Protection Association
Provided by IHS under license with NFPA
No reproduction or networking permitted without license from IHS
Not for Resale

Chapter 3 Safety Requirements for Special Equipment

ARTICLE 300
Introduction

300.1 Scope. Chapter 3 covers electrical safety installation requirements and safety-related work practices and procedures for employees who work on or near special electrical equipment in the workplace. Chapter 3 supplements or modifies the general requirements of Chapter 1 and Chapter 4.

300.2 Responsibility. The employer shall provide safety-related work practices and employee training. The employee shall follow those work practices.

300.3 Organization. Chapter 3 of this standard is divided into articles. Article 300 applies generally. Article 310 applies to electrolytic cells as described in 430.8. Article 320 applies to batteries and battery rooms. Article 330 applies to lasers. Article 340 applies to power electronic equipment.

FPN: The NFPA 70E Technical Committee might develop additional chapters for other types of special equipment in the future.

ARTICLE 310
Safety-Related Work Practices for Electrolytic Cells

310.1 Scope. The requirements of this chapter shall apply to the electrical safety-related work practices used in the types of electrolytic cell areas set forth in 430.8.

FPN No. 1: See Annex L for a typical application of safeguards in the cell line working zone.

FPN No. 2: For further information, see IEEE *Standard for Electrical Safety Practices in Electrolytic Cell Line Working Zones*, IEEE Std. 463-1993.

310.2 Definitions. For the purposes of this chapter, the following definitions shall apply.

Battery Effect. A voltage that exists on the cell line after the power supply is disconnected.

FPN: Electrolytic cells could exhibit characteristics similar to an electrical storage battery, and thus a hazardous voltage could exist after the power supply is disconnected from the cell line.

Safeguarding. Safeguards for personnel include the consistent administrative enforcement of safe work practices. Safeguards include training in safe work practices, cell line design, safety equipment, personal protective equipment, operating procedures, and work checklists.

310.3 Safety Training.

(A) General. The training requirements of this chapter shall apply to employees who are exposed to the risk of electrical hazard in the cell line working zone defined in 110.6 and shall supplement or modify the requirements of 110.8, 120.1, 130.1, and 130.5.

(B) Training Requirements. Employees shall be trained to understand the specific hazards associated with electrical energy on the cell line. Employees shall be trained in safety-related work practices and procedural requirements to provide protection from the electrical hazards associated with their respective job or task assignment.

310.4 Employee Training.

(A) Qualified Persons.

(1) Training. Qualified persons shall be trained and knowledgeable in the operation of cell line working zone equipment and specific work methods and shall be trained to avoid the electrical hazards that are present. Such persons shall be familiar with the proper use of precautionary techniques and personal protective equipment. Training for a qualified person shall include the following:

(1) The skills and techniques to avoid dangerous contact with hazardous voltages between energized surfaces and between energized surfaces and ground. Skills and techniques might include temporarily insulating or guarding parts to permit the employee to work on energized parts.
(2) The method of determining the cell line working zone area boundaries.

(2) Qualified Persons. Qualified persons shall be permitted to work within the cell line working zone.

(B) Unqualified Persons.

(1) Training. Unqualified persons shall be trained to recognize electrical hazards to which they may be exposed and the proper methods of avoiding the hazards.

Copyright National Fire Protection Association
Provided by IHS under license with NFPA
No reproduction or networking permitted without license from IHS
Not for Resale

(2) In Cell Line Working Zone. When there is a need for an unqualified person to enter the cell line working zone to perform a specific task, that person shall be advised by the designated qualified person-in-charge of the possible hazards to ensure the unqualified person is safeguarded.

310.5 Safeguarding of Employees in the Cell Line Working Zone.

(A) General. Operation and maintenance of electrolytic cell lines may require contact by employees with exposed energized surfaces such as buses, electrolytic cells, and their attachments. The approach distances referred to in Table 130.2(C) shall not apply to work performed by qualified persons in the cell line working zone. Safeguards such as safety-related work practices and other safeguards shall be used to protect employees from injury while working in the cell line working zone. These safeguards shall be consistent with the nature and extent of the related electrical hazards. Safeguards might be different for energized cell lines and deenergized cell lines. Hazardous battery effect voltages shall be dissipated to consider a cell line deenergized.

FPN No. 1: Exposed energized surfaces might not establish a hazardous condition. A hazardous electrical condition is related to current flow through the body causing shock and flash burns and arc blasts. Shock is a function of many factors, including resistance through the body and through skin, of return paths, of paths in parallel with the body, and of system voltages. Arc flash burns and arc blasts are a function of the current available at the point involved and the time of arc exposure.

FPN No. 2: A cell line or group of cell lines operated as a unit for the production of a particular metal, gas, or chemical compound might differ from other cell lines producing the same product because of variations in the particular raw materials used, output capacity, use of proprietary methods or process practices, or other modifying factors. Detailed standard electrical safety-related work practice requirements could become overly restrictive without accomplishing the stated purpose of Chapter 1 of this standard.

(B) Signs. Permanent signs shall clearly designate electrolytic cell areas.

(C) Electrical Flash Hazard Analysis. The requirements of 130.3, Flash Hazard Analysis, shall not apply to electrolytic cell line work zones.

(1) Flash Hazard Analysis Procedure. Each task performed in the electrolytic cell line working zone shall be analyzed for the risk of flash hazard injury. If there is risk of personal injury, appropriate measures shall be taken to protect persons exposed to the flash hazards. These measures shall include one or more of the following:

(1) Provide appropriate personal protective equipment *[see 310.5(D)(2)]* to prevent injury from the flash hazard.
(2) Alter work procedures to eliminate the possibility of the flash hazard.
(3) Schedule the task so that work can be performed when the cell line is deenergized.

(2) Routine Tasks. Flash hazard analysis shall be done for all routine tasks performed in the cell line work zone. The results of the flash hazard analysis shall be used in training employees in job procedures that minimize the possibility of flash hazards. The training shall be included in the requirements of 310.3.

(3) Nonroutine Tasks. Before a nonroutine task is performed in the cell line working zone, a flash hazard analysis shall be done. If flash hazard is a possibility during nonroutine work, appropriate instructions shall be given to employees involved on how to minimize the possibility of a hazardous flash.

(4) Flash Hazards. If the possibility of a flash hazard exists for either routine or nonroutine tasks, employees shall use appropriate safeguards.

(D) Safeguards. Safeguards shall include one or a combination of the following means.

(1) Insulation. Insulation shall be suitable for the specific conditions, and its components shall be permitted to include glass, porcelain, epoxy coating, rubber, fiberglass, plastic, and when dry, such materials as concrete, tile, brick, and wood. Insulation shall be permitted to be applied to energized or grounded surfaces.

(2) Personal Protective Equipment. Personal protective equipment shall provide protection from hazardous electrical conditions. Personal protective equipment shall include one or more of the following as determined by authorized management:

(1) Shoes, boots, or overshoes for wet service
(2) Gloves for wet service
(3) Sleeves for wet service
(4) Shoes for dry service
(5) Gloves for dry service
(6) Sleeves for dry service
(7) Electrically insulated head protection
(8) Protective clothing
(9) Eye protection

a. Standards for Personal Protective Equipment. Personal and other protective equipment shall be appropriate for conditions, as determined by authorized management, and shall not be required to meet the equipment standards in 130.7(C)(8) through 130.7(F) and in Table 130.7(C)(8) and Table 130.7(F).
b. Testing of Personal Protective Equipment. Personal protective equipment shall be verified with regularity and by methods that are consistent with the exposure of employees to hazardous electrical conditions.

Copyright National Fire Protection Association
Provided by IHS under license with NFPA
No reproduction or networking permitted without license from IHS
Not for Resale

(3) Barriers. Barriers shall be devices that prevent contact with energized or grounded surfaces that could present a hazardous electrical condition.

(4) Voltage Equalization. Voltage equalization shall exist where conductive surfaces are bonded to an energized surface, either directly or through a resistance, so that there is insufficient voltage between the surfaces to result in a hazardous electrical condition.

(5) Isolation. Isolation shall be the placement of equipment or items in locations such that employees are unable to simultaneously contact exposed conductive surfaces that could present a hazardous electrical condition.

(6) Safe Work Practices. Employees shall be trained in safe work practices. The training shall include why the work practices in a cell line working zone are different from similar work situations in other areas of the plant. Employees shall comply with established safe work practices and the safe use of protective equipment.

(a) Attitude Awareness. Safe work practice training shall include attitude awareness instruction. Simultaneous contact with energized parts and ground can cause serious electrical shock. Of special importance is the need to be aware of body position where contact may be made with energized parts of the electrolytic cell line and grounded surfaces.

(b) Bypassing of Safety Equipment. Safe work practice training shall include techniques to prevent bypassing the protection of safety equipment. Clothing may bypass protective equipment if the clothing is wet. Trouser legs should be kept at appropriate length, and shirt sleeves should be a good fit so as not to drape while reaching. Jewelry and other metal accessories that may bypass protective equipment shall not be worn while working in the cell line working zone.

(7) Tools. Tools and other devices used in the energized cell line work zone shall be selected to prevent bridging between surfaces at hazardous potential difference.

FPN: Tools and other devices of magnetic material could be difficult to handle in energized cells' areas due to their strong dc magnetic fields.

(8) Portable Cutout Type Switches. Portable cell cutout switches that are connected shall be considered as energized and as an extension of the cell line working zone. Appropriate procedures shall be used to ensure proper cutout switch connection and operation.

(9) Cranes and Hoists. Cranes and hoists shall meet the requirements of 430.8(I). Insulation required for safeguarding employees, such as insulated crane hooks, shall be periodically tested.

(10) Attachments. Attachments that extend the cell line electrical hazards beyond the cell line working zone shall utilize one or more of the following:

(1) Temporary or permanent extension of the cell line working zone
(2) Barriers
(3) Insulating breaks
(4) Isolation

(11) Pacemakers and Metallic Implants. Employees with implanted pacemakers, ferromagnetic medical devices, or other electronic devices vital to life shall not be permitted in cell areas unless written permission is obtained from the employee's physician.

FPN: The American Conference of Government Industrial Hygienists (ACGIH) recommends that persons with implanted pacemakers should not be exposed to magnetic flux densities above 10 gauss.

(12) Testing. Equipment safeguards for employee protection shall be tested to ensure they are in a safe working condition.

310.6 Portable Tools and Equipment.

(A) Portable Electrical Equipment. The grounding requirements of 110.9(B)(2) shall not be permitted within an energized cell line working zone. Portable electrical equipment shall meet the requirements of 430.8(E). Power supplies for portable electric equipment shall meet the requirements of 430.8(F).

(B) Auxiliary Nonelectric Connections. Auxiliary nonelectric connections such as air, water, and gas hoses shall meet the requirements of 430.8(H). Pneumatic-powered tools and equipment shall be supplied with nonconductive air hoses in the cell line working zone.

(C) Welding Machines. Welding machine frames shall be considered at cell potential when within the cell line working zone. Safety-related work practices shall require that the cell line not be grounded through the welding machine or its power supply. Welding machines located outside the cell line working zone shall be barricaded to prevent employees from touching the welding machine and ground simultaneously where the welding cables are in the cell line working zone.

(D) Portable Test Equipment. Test equipment in the cell line working zone shall be suitable for use in areas of large magnetic fields and orientation.

FPN: Test equipment that is not suitable for use in such magnetic fields could result in an incorrect response. When such test equipment is removed from the cell line working zone, its performance might return to normal, giving the false impression that the results were correct.

Copyright National Fire Protection Association
Provided by IHS under license with NFPA
No reproduction or networking permitted without license from IHS
Not for Resale

ARTICLE 320
Safety Requirements Related to Batteries and Battery Rooms

320.1 Scope. The requirements of this article shall apply to the safety requirements related to installations of batteries and battery rooms with a stored capacity exceeding 1 kWh or a floating voltage that exceeds 115 volts but does not exceed 650 volts.

FPN: For further information, refer to the following documents:

(1) NFPA 70-2002, *National Electrical Code*, Article 480, Storage Batteries
(2) IEEE Std. 484-2002, *Recommended Practice for Installation Design and Installation of Vented Lead-Acid Batteries for Stationary Applications*
(3) IEEE Std. 937-1987 (R1993), *Recommended Practice for Installation and Maintenance of Lead-Acid Batteries for Photovoltaic Systems*
(4) IEEE Std. 1187-1996, *Recommended Practice for Installation Design and Installation of Valve-Regulated Lead-Acid Storage Batteries for Stationary Applications*
(5) OSHA 1926.403, *Battery Rooms and Battery Charging*
(6) OSHA 1910.178(g), *Changing and Charging Batteries*
(7) OSHA 1910.305(j)(7), *Storage Batteries*

320.2 Definitions. For the purposes of this chapter, the following definitions shall apply.

Accessories. Items supplied with the battery to facilitate the continued operation of the battery.

Authorized Person. The person in charge of the premises, or other person appointed or selected by the person in charge of the premises, to perform certain duties associated with the battery installation on the premises.

Battery. An electrochemical system capable of storing under chemical form the electric energy received and which can give it back by reconversion.

Battery Enclosure. An enclosure containing batteries that is suitable for use in an area other than a battery room or an area restricted to authorized personnel.

Battery Room. Room specifically intended for the installation of batteries that have no other protective enclosure.

Capacity. The quantity of electricity (electric charge) usually expressed in ampere-hour (A·h) that a fully charged battery can deliver under specified conditions.

Cell. An assembly of electrodes and electrolyte that constitutes the basic unit of the battery.

Charging. An operation during which a battery receives electric energy that is converted to chemical energy from an external circuit. The quantity of electric energy then is known as the charge and is usually measured in ampere-hour.

Constant Current Charge. A charge during which the current is maintained at a constant value.

Constant Voltage Charge. A charge during which the voltage across the battery terminals is maintained at a constant value.

Container. A container for the plate pack and electrolyte of a cell of a material impervious to attack by the electrolyte.

Discharging. An operation during which a battery delivers current to an external circuit by the conversion of chemical energy to electric energy.

Electrolyte. A solid, liquid, or aqueous salt solution that permits ionic conduction between positive and negative electrodes of a cell.

Electrolyte Density. Density of the electrolyte, measured in kilograms per cubic meter at a specific temperature (density of pure water = 1000 kilograms per cubic meter at 4°Celsius).

FPN: The density of an electrolyte was formerly indicated by its specific gravity. Specific gravity is the ratio of the density of the electrolyte to the density of pure water. S.G. = (electrolyte density in kilograms per cubic meter)/1000.

Flame-Arrested Vent Plug. A vent plug design that provides protection against internal explosion when the cell or battery is exposed to a naked flame or external spark.

Gassing. The formation of gas produced by electrolyte.

Intercell and Interrow Connection. Connections made between rows of cells or at the positive and negative terminals of the battery that might include lead-plated terminal plates, cables with lead, plated lugs, and lead-plated rigid copper connectors, and for nickel-cadmium cells, nickel-plated copper intercell connections.

Intercell Connector Safety Cover. Insulated cover to shroud the terminals and intercell connectors from inadvertent contact by personnel or accidental short circuiting.

Nominal Voltage. An approximate value of voltage used to identify a type of battery.

Pilot Cell. A selected cell of a battery that is considered to be representative of the average state of the battery or part thereof.

Prospective Fault Current. The highest level of fault current that can occur at a point on a circuit. This is the fault current that can flow in the event of a zero impedance short-circuit and if no protection devices operate.

Copyright National Fire Protection Association
Provided by IHS under license with NFPA
No reproduction or networking permitted without license from IHS
Not for Resale

Rate. The current expressed in amperes at which a battery is discharged.

Sealed Battery. A battery that has no provision for the addition of water or electrolyte or for external measurement of electrolyte specific gravity.

Secondary Battery. Two or more cells electrically connected and used as a source of energy.

Secondary Cell. An assembly of electrodes and electrolytes that constitutes the basic unit of a battery.

Stepped Stand. Containers placed in rows and these rows are placed at different levels to form a stepped arrangement.

Terminal Post. A part provided for the connection of a cell or a battery to external conductors.

Tiered Stand. Where rows of containers are placed above containers of the same or another battery.

Valve Regulated Battery. A battery in which the venting of the products of electrolysis is controlled by a reclosing pressure-sensitive valve.

Vented Battery. A battery in which the products of electrolysis and evaporation are allowed to escape freely to the atmosphere.

Vent Plug. A part closing the filling hole that is also employed to permit the escape of gas.

VRLA. Valve-regulated lead-acid storage battery.

320.3 Battery Connections.

(A) Method of Connection.

FPN No. 1: Batteries usually consist of a number of identical cells connected in series. The voltage of a series connection of cells is the voltage of a single cell multiplied by the number of cells. If cells of sufficiently large capacity are available, then two or more series-connected strings of equal numbers of cells could be connected in parallel to achieve the desired rated capacity. The rated capacity of such a battery is the sum of the capacities of a group of cells comprising a single cell from each of the parallel branches.

FPN No. 2: Cells of unequal capacity should not be connected in series.

FPN No. 3: Parallel connections of batteries should be limited to 4 strings.

FPN No. 4: Parallel connections of batteries are not recommended for constant current-charging applications.

FPN No. 5: Cells connected in series have high voltages that could produce a shock hazard.

(B) Battery Short-Circuit Current. The battery manufacturer shall be consulted regarding the sizing of the battery short-circuit protection.

Exception: If information regarding the short-circuit protection of a battery is not available from the manufacturer, the prospective fault level at the battery terminals shall be considered to be twenty times the nominal battery capacity at the 3-hour rate.

FPN: Battery short-circuit current = (battery voltage)/(internal resistance).

(C) Connection Between Battery and DC Switching Equipment.

(1) General. Any cable, busbar, or busway forming the connection between the battery terminal and the dc switching equipment shall be rated to withstand the prospective short-circuit current.

FPN: The available short-circuit current should be assumed for a time period of at least 1 second.

Outside busbars and cables should be both of the following:

(1) Insulated from the battery terminals to a height of 3.75 m (12 ft 4 in.), or to the battery room ceiling, whichever is lower
(2) Be clearly identified and segregated from any other supply circuits

(2) Cable. Cables shall be effectively clamped and sufficient support shall be provided throughout the length of cables to minimize sag and prevent undue strain from being imposed on the cable.

(3) Busbars.

FPN: Busbars should be insulated throughout their length by an insulating material not affected by the acid fumes that are present in a battery room. The steelwork supporting the busbar system should be installed so as not to restrict access to the battery for the purpose of maintenance.

(4) Busways.

FPN: Busways should be fully enclosed and able to withstand high levels of fault current without danger.

(D) DC Switching Equipment. Switching equipment shall comply with the *NEC*.

(E) Terminals and Connectors. Intercell and battery terminal connections shall be constructed of materials, either intrinsically resistant to corrosion or suitably protected by surface finish against corrosion. The joining of materials that are incompatible in a corrosive atmosphere shall be avoided.

FPN No. 1: To prevent mechanical stress on the battery terminal posts, the connection between the battery and any busbar system or large cable should be by insulated flexible cable of suitable rating.

Copyright National Fire Protection Association
Provided by IHS under license with NFPA
No reproduction or networking permitted without license from IHS
Not for Resale

FPN No. 2: The takeoff battery terminals and busbar connections should be shrouded or protected by physical barriers to prevent accidental contact.

(F) DC Systems Grounding and Ground-Fault Detection. One of the four types of available dc grounding systems, described as Type 1 through Type 4, shall be used.

FPN: Stationary battery systems should not be grounded.

(1) Type 1. The ungrounded dc system in which neither pole of the battery is connected to ground

FPN: Work on such a system should be carried out with the battery isolated from the battery charger. If an intentional ground is placed at one end of the battery, an increased shock hazard would exist between the opposite end of the battery and ground. Also, if another ground develops within the system (e.g., dirt and acid touching the battery rack), it creates a short-circuit that could cause a fire. An ungrounded dc system should be equipped with an alarm to indicate the presence of a ground-fault.

(2) Type 2. The solidly grounded dc system where either the positive or negative pole of the battery is connected directly to ground

(3) Type 3. The resistance grounded dc system, where the battery is connected to ground through a resistance

FPN: The resistance is used to permit operation of a current relay, which in turn initiates an alarm.

(4) Type 4. A tapped solid ground, either at the center point or at another point to suit the load system

(G) Protection of DC Circuits. DC circuits shall be protected in accordance with the *NEC*.

(H) Alarms.

(1) Abnormal Battery Conditions. Alarms shall be provided for early warning of the following abnormal conditions of battery operation:

(1) For vented batteries:
   a. Overvoltage
   b. Undervoltage
   c. Overcurrent
   d. Ground-fault

(2) For VRLA batteries, items (1)(a) though (1)(d) plus overtemperature, as measured at the pilot cell

(2) Warning Signal. The alarm system shall provide an audible alarm and visual indication at the battery location, and where applicable, at a remote manned control point.

320.4 Installations of Batteries. Installations using secondary batteries vary considerable in size, form large uninterruptible power supply systems, telecommunication systems, and demand load leveling installations to small emergency lighting installations. Secondary batteries permanently installed in or on buildings, structures, or premises, having a nominal voltage exceeding 24 volts and a capacity exceeding 10 ampere-hours at the 1-hour rate, shall be installed in a battery room or battery enclosure.

(A) Location. Batteries shall be installed in one of the following:

(1) Dedicated battery rooms
(2) An area accessible only to authorized personnel
(3) An enclosure with lockable doors or a suitable housing that shall be lockable and provide protection against electrical contact and damage to the battery

(B) Arrangement of Cells. The space between adjacent containers shall be at least 12.5 mm (½ in.) and meet the following requirements:

(1) All cells shall be readily accessible for examination of the electrolyte level, refilling, cleaning, or removal as applicable.
(2) Each cell shall be readily accessible without having to reach over another cell or alternatively all exposed live surfaces shall be shrouded.

(C) Ventilation for Batteries of the Vented Type.

(1) Installation. Batteries shall be located in rooms or enclosures with outside vents or in well-ventilated rooms, so arranged to prevent the escape of fumes, gases, or electrolyte spray into other areas.

(2) Ventilation. Ventilation shall be provided so as to prevent liberated hydrogen gas from exceeding 1 percent concentration.

(a) Adequacy. Room ventilation shall be adequate to assure that pockets of trapped hydrogen gas do not occur, particularly at the ceiling, to prevent the accumulation of an explosive mixture.

(b) Equipment Considerations. Exhaust air shall not pass over electrical equipment unless the equipment is listed for the use.

(c) Location of Inlets. Inlets shall be no higher than the tops of the battery cells and outlets at the highest level in the room.

FPN: Ventilation rates should be based on the maximum hydrogen evolution rate for the applicable batteries. The maximum hydrogen evolution rate for lead antimony batteries should be considered as 0.000440 m^3/min (0.000269 ft^3/min) per charging ampere per cell at 25°C (77°F), with the maximum charging current available from the battery charger applied into a fully charged battery. The maximum hydrogen evolution rate for other types of batteries (e.g., lead calcium and nickel cadmium) should be obtained for the condition when the maximum charging current available from the battery charger is applied into a fully charged battery.

Copyright National Fire Protection Association
Provided by IHS under license with NFPA
No reproduction or networking permitted without license from IHS
Not for Resale

(3) Mechanical Ventilation. Where mechanical ventilation is installed, the following shall be required:

(1) Airflow sensors shall be installed to initiate an alarm if the ventilation fan becomes inoperative.
(2) Control equipment for the exhaust fan shall be located more than 1800 mm (6 ft) from the battery and a minimum of 100 mm (4 in.) below the lowest point of the highest ventilation opening.
(3) Where mechanical ventilation is used in a dedicated battery room, all exhaust air shall be discharged outside the building.
(4) Fans used to remove air from a battery room shall not be located in the duct unless the fan is listed for the use.

(D) Ventilation for VRLA Type.

(1) Ventilation Requirements. Ventilation shall be provided so as to prevent liberated hydrogen gas from exceeding a 1 percent concentration.

(a) Adequacy. Room ventilation shall be adequate to ensure that pockets of trapped hydrogen gas do not occur, particularly at the ceiling, to prevent the accumulation of an explosive mixture.

(b) Exhaust. Exhaust air shall not pass over electrical equipment unless the equipment is listed for the use.

(c) Inlets. Inlets shall be no higher than the tops of the battery cells and outlets at the highest level in the room.

(2) Mechanical Ventilation. Where mechanical ventilation is installed, the following shall be required:

(1) Airflow sensors shall be installed to initiate an alarm if the ventilation fan becomes inoperative.
(2) Control equipment for the exhaust fan shall be located more than 1800 mm (6 ft) from the battery and a minimum of 100 mm (4 in.) below the lowest point of the highest ventilation opening.
(3) Where mechanical ventilation is used in a dedicated battery room, all exhaust air shall be discharged outside the building.
(4) Fans used to remove air from a battery room shall not be located in the duct unless the fan is listed for the use.

(3) Temperature Requirements. Ventilation shall be provided to maintain design temperature to prevent thermal runaway that can cause cell meltdown leading to a fire or explosion.

(E) Ventilation for Sealed Gelled Electrolyte Type.

(1) Temperature Requirements. Ventilation shall be provided to maintain design temperature to prevent thermal runaway that can cause cell meltdown leading to a fire or explosion.

(2) Mechanical Ventilation. Where mechanical ventilation is installed, airflow sensors shall be installed to initiate an alarm if the ventilation fan becomes inoperative.

320.5 Battery Room Requirements.

(A) General. The battery room shall be accessible only to authorized personnel and shall be locked when unoccupied.

(1) Battery Rooms or Areas Restricted to Authorized Personnel.

(a) Doors. The battery room and enclosure doors shall open outward. The doors shall be equipped with quick-release, quick-opening hardware.

(b) Location. The battery room shall be located so that access to the batteries is unobstructed. Direct-current switching equipment, rotating machinery other than exhaust fans, and other equipment not directly part of the battery and charging facilities shall be external to the battery room. Alternatively, dc switching equipment shall be separated from the battery by a partition of a height no less than 2 m (6 ft 6 in.) and of sufficient length to prevent accidental contact with live surfaces.

(c) Foreign Piping. Foreign piping shall not pass through the battery room.

(d) Passageways. Passageways shall be of sufficient width to allow the replacement of all battery room equipment.

(e) Emergency Exits. Emergency exits shall be provided as required.

(f) Access. Access and entrance to working space about the battery shall be provided as required by 400.15.

FPN: Provision to include emergency services personnel and their equipment should be made.

(2) Battery Enclosures. All cells shall be readily accessible for examination of the electrolyte level, refilling, cleaning, and removal.

(3) Battery Room Floor Loading. Floor loading shall take into account the seismic activity.

(4) Battery Room Floor Construction and Finish. Where the grading of the floor is not practicable, suitable drip trays or sumps shall be installed to restrict the spread of spilled electrolyte.

FPN No. 1: The battery room floor should be of concrete construction. The floor should be graded so any spillage of electrolyte will drain to an area where the electrolyte could be neutralized before disposal. (The battery manufacturer should be consulted on the appropriate floor grading so as to reduce connection alignment problems.)

FPN No. 2: The floor should be covered with an electrolyte-resistant, durable, antistatic, and slip-resistant surface overall, to a height 100 mm (4 in.) on each wall. Where batteries are mounted against a wall, the wall behind and at each end of the battery should be coated to a distance of 500 mm (20 in.) around the battery with an electrolyte-resistant paint.

Copyright National Fire Protection Association
Provided by IHS under license with NFPA
No reproduction or networking permitted without license from IHS
Not for Resale

(B) Battery Layout and Floor Area. The battery layout and floor area shall meet the following requirement:

(1) Battery Layout. The installation shall be so designed that, unless there is a physical barrier, potential differences exceeding 120 volts shall be separated by a distance of not less than 900 mm (36 in.) measured in a straight line in any direction.

(2) Floor Area. The floor area shall allow for the following clearances.

(a) Aisle Width. The minimum aisle width shall be 900 mm (36 in.).

(b) Single Row Batteries. In addition to the minimum aisle width, there shall be a minimum clearance of 25 mm (1 in.) between a cell and any wall or structure on the side not requiring access for maintenance. This required clearance does not preclude battery stands touching adjacent walls or structures, provided that the battery shelf has a free air space for no less than 90 percent of its length.

(c) Double-Row Batteries. The minimum aisle width shall be maintained on one end and both sides of the battery. The remaining end shall have a minimum clearance of 100 mm (4 in.) between any wall or structure and a cell.

(d) Tiered Batteries. Tiered batteries shall meet the requirements of 320.5(B)(2)(a), 320.5(B)(2)(b), and 320.5(B)(2)(c). In addition, there shall be a minimum clearance of 300 mm (12 in.) between the highest point of the battery located on the bottom tier and the lowest point of the underside of the upper runner bearers.

(e) Where a charger, or other associated electrical equipment, is located in a battery room, the aisle width between any battery and any part of the battery-charging equipment (including the doors when fully open) shall be at least 900 mm (36 in.).

(C) Takeoff Battery Terminals and Outgoing Busbars and Cables.

(1) Takeoff Battery Terminals. Outgoing busbars and cables shall meet the following requirements:

(1) Be insulated from the battery terminals to a height of 3.75 m (12 ft 4 in.) or the battery room ceiling, whichever is lower
(2) Be clearly identified and segregated from any other supply circuits

(2) Outgoing Busbars and Cables. The takeoff battery terminals and busbar connections shall comply with either of the following:

(1) Be shrouded
(2) Be protected by physical barriers to prevent accidental contact

(D) Intertier and Interrow Connections. The battery terminals and busbar and cable interconnections between rows shall comply with either of the following:

(1) Be shrouded
(2) Be protected by insulating barriers to prevent accidental contact

(E) Barriers. To avoid accidental contact with intercell connections, the following insulating barriers shall be installed.

(1) Double-Row Batteries. Insulating barriers between double-row batteries shall be installed for the entire length of the battery extending 100 mm (4 in.) past the end terminal unless those terminals are shrouded. The barrier shall extend vertically a minimum of 400 mm (16 in.) above the exposed portion of the intercell connections and a minimum of 25 mm (1 in.) below the top of the battery container.

(2) Batteries Above 120 Volts. Where the nominal voltage of the battery exceeds 120 volts, interblock barriers shall be installed to sectionalize the battery into voltage blocks not exceeding 120 volts. Barriers shall extend a minimum of 50 mm (2 in.) out from the exposed side of the battery and a minimum of 400 mm (16 in.) above the top of the container.

(F) Illumination.

(1) Battery Room Lighting. Battery room lighting shall be installed to provide a minimum level of illumination of 300 lux (30 ft-candles).

(2) Emergency Lighting. Emergency illumination shall be provided for safe egress from the battery room.

(G) Location of Luminaires (Lighting Fixtures) and Switches. Luminaires (lighting fixtures) shall not be installed directly over cells or exposed live parts. Switches for the control of the luminaires (lighting fixtures) shall be readily accessible.

(H) Power. General-purpose outlets shall be installed for the maintenance of the battery.

(I) Location of General-Purpose Outlets. General-purpose outlets shall be installed at least 1800 mm (6 ft) from the battery and a minimum of 100 mm (4 in.) below the lowest point of the highest ventilation opening.

320.6 Battery Enclosure Requirements.

(A) Enclosure Construction.

(1) General. Where enclosures are designed to accommodate the battery, the battery charger, and other equipment, separate compartments shall be provided for each.

(2) Ventilation. The ventilation openings for the compartments shall be spaced as far apart as practicable.

Copyright National Fire Protection Association
Provided by IHS under license with NFPA
No reproduction or networking permitted without license from IHS
Not for Resale

(B) Battery Takeoff Terminals and Outgoing Busbars and Cables. Outgoing busbars and cables shall be fully insulated, and the battery takeoff terminals shall comply with either of the following:

(1) Be fully shrouded
(2) Have physical barriers installed between them

(C) Battery Compartment Circuits. Only circuits associated with the battery shall be installed within a battery compartment of the enclosure.

320.7 Protection.

(A) General.

(1) Marking. When the battery capacity exceeds 100 ampere-hours or where the nominal battery voltage is in excess of 50 volts, suitable warning notices indicating the battery voltage and the prospective short-circuit current of the installation shall be displayed.

(2) Overcurrent Protection. Each output conductor shall be individually protected by a fuse or circuit breaker positioned as close as practicable to the battery terminals.

(3) Protective Equipment. Protective equipment shall not be located in the battery compartment of the enclosure.

(B) Switching and Control Equipment. Switching and control equipment shall comply with NFPA 70, *National Electrical Code*, and shall be listed for the application.

(C) Ground-Fault Protection. For an ungrounded battery of nominal voltage in excess of 120 volts, a ground-fault detector shall be provided to initiate a ground-fault alarm.

(D) Main Isolating Switch. The battery installation shall have an isolating switch installed as close as practicable to the main terminals of the battery. Where a busway system is installed, the isolating switch may be incorporated into the end of the busway.

(E) Section Isolating Equipment. Where the battery section exceeds 120 volts, the installation shall include an isolating switch, plugs, or links, as required, to isolate sections of the battery, or part of the battery for maintenance.

(F) Warning Signs. The following signs shall be posted in appropriate locations:

(1) Electrical hazard warning signs indicating the shock hazard due to the battery voltage and the arc hazard due to the prospective short-circuit current
(2) Chemical hazard warning signs indicating the danger of hydrogen explosion from open flame and smoking and the danger of chemical burns from the electrolyte
(3) Notice for personnel to use and wear protective equipment and apparel
(4) Notice prohibiting access to unauthorized personnel

320.8 Personnel Protective Equipment. The following protective equipment shall be available to employees performing battery maintenance:

(1) Goggle and face shields
(2) Chemical-resistant gloves
(3) Protective aprons
(4) Protective overshoes
(5) Portable or stationary water facilities for rinsing eyes and skin in case of electrolyte spillage

320.9 Tools and Equipment. Tools and equipment for work on batteries shall comply with the following:

(1) Be of the nonsparking type
(2) Be equipped with handles listed as insulated for the maximum working voltage

ARTICLE 330
Safety-Related Work Practices for Use of Lasers

330.1 Scope. The requirements of this article shall apply to the use of lasers in the laboratory and the workshop.

330.2 Definitions. For the purposes of this article, the following definitions shall apply.

Fail Safe. The design consideration in which failure of a component does not increase the hazard. In the failure mode, the system is rendered inoperative or nonhazardous.

Fail Safe Safety Interlock. An interlock that in the failure mode does not defeat the purpose of the interlock, for example, an interlock that is positively driven into the off position as soon as a hinged cover begins to open, or before a detachable cover is removed, and that is positively held in the off position until the hinged cover is closed or the detachable cover is locked in the closed position.

Laser. Any device that can be made to produce or amplify electromagnetic radiation in the wavelength range from 100 nm to 1 mm primarily by the process of controlled stimulated emission.

Laser Controlled Area. An area where the occupancy and activity of those within are subject to control and supervision for the purpose of protection from radiation hazards.

Copyright National Fire Protection Association
Provided by IHS under license with NFPA
No reproduction or networking permitted without license from IHS
Not for Resale

Laser Energy Source. Any device intended for use in conjunction with a laser to supply energy for the excitation of electrons, ions, or molecules. General energy sources, such as electrical supply services or batteries, shall not be considered to constitute laser energy sources.

Laser Fiber Optic Transmission System. A system consisting of one or more laser transmitters and associated fiber optic cable.

Laser Hazard Area. The area within which the beam irradiance or radiant exposure exceeds the appropriate corneal maximum permissible exposure (MPE), including the possibility of accidental misdirection of the beam.

Laser Product. Any product or assembly of components that constitutes, incorporates, or is intended to incorporate a laser or laser system.

Laser Radiation. All electromagnetic radiation emitted by a laser product between 100 nm and 1 mm that is produced as a result of a controlled stimulated emission.

Laser System. A laser in combination with an appropriate laser energy source with or without additional incorporated components.

330.3 Safety Training.

(A) Personnel to Be Trained. Employers shall provide training for all operator and maintenance personnel.

(B) Scope of Training. The training shall include, but is not limited to, the following:

(1) Familiarization with laser principles of operation, laser types, and laser emissions
(2) Laser safety, including the following:
   a. System operating procedures
   b. Hazard control procedures
   c. The need for personnel protection
   d. Accident reporting procedures
   e. Biological effects of the laser upon the eye and the skin
   f. Electrical and other hazards associated with the laser equipment, including the following:
      i. High voltages (> 1 kV) and stored energy in the capacitor banks
      ii. Circuit components, such as electron tubes, with anode voltages greater than 5 kV emitting X-rays
      iii. Capacitor bank explosions
      iv. Production of ionizing radiation
      v. Poisoning from the solvent or dye switching liquids or laser media
      vi. High sound intensity levels from pulsed lasers

(C) Proof of Qualification. Proof of qualification of the laser equipment operator shall be available and in possession of the operator at all times.

330.4 Safeguarding of Employees in the Laser Operating Area.

(A) Eye Protection. Employees shall be provided with eye protection as required by federal regulation.

(B) Warning Signs. Warning signs shall be posted at the entrances to areas or protective enclosures containing laser products.

(C) Master Control. High power laser equipment shall include a key-operated master control.

(D) High-power laser equipment shall include a fail-safe laser radiation emission audible and visible warning when it is switched on or if the capacitor banks are charged.

(E) Beam shutters or caps shall be utilized, or the laser switched off, when laser transmission is not required. The laser shall be switched off when unattended for 30 minutes or more.

(F) Laser beams shall not be aimed at employees.

(G) Laser equipment shall bear a label indicating its maximum output.

(H) Personnel protective equipment shall be provided for users and operators of high-power laser equipment.

330.5 Employee Responsibility. Employees shall be responsible for the following:

(1) Obtaining authorization for laser use
(2) Obtaining authorization for being in a laser operating area
(3) Observing safety rules
(4) Reporting laser equipment failures and accidents to the employer

ARTICLE 340
Safety-Related Work Practices: Power Electronic Equipment

340.1 Scope. This article shall apply to safety-related work practices around power electronic equipment, including the following:

(1) Electric arc welding equipment
(2) High-power radio, radar, and television transmitting towers and antenna
(3) Industrial dielectric and RF induction heaters
(4) Shortwave or radio frequency diathermy devices

Copyright National Fire Protection Association
Provided by IHS under license with NFPA
No reproduction or networking permitted without license from IHS
Not for Resale

(5) Process equipment that includes rectifiers and inverters such as the following:
   a. Motor drives
   b. Uninterruptible power supply systems
   c. Lighting controllers

340.2 Definition. For the purposes of this article, the following definition shall apply.

Radiation Worker. A person who is required to work in electromagnetic fields, the radiation levels of which exceed those specified for nonoccupational exposure.

340.3 Application. This purpose of this article is to provide guidance for safety personnel in preparing specific safety-related work practices within their industry.

340.4 Reference Standards. The following are reference standards for use in the preparation of specific guidance to employees:

(1) International Electrotechnical Commission [IEC]: 479 Effects of current passing through the human body:
   a. 479-1 Part 1 General aspects
   b. 479-1-1 Chapter 1: Electrical impedance of the human body
   c. 479-1-2 Chapter 2: Effects of ac in the range of 15 Hz to 100 Hz
   d. 479-2 Part 2: Special aspects
   e. 479-2-4: Chapter 4: Effects of ac with frequencies above 100 Hz
   f. 479-2-5 Chapter 5: Effects of special waveforms of current
   g. 479-2-6 Chapter 6: Effects of unidirectional single impulse currents of short duration

(2) International Commission on Radiological Protection [IRCP]:

International Commission for Radiological Protection Publication 15: Protection against ionizing radiation from external sources

340.5 Hazards Associated with Power Electronic Equipment. Employer and employees shall be aware of the following hazards associated with power electronic equipment.

(1) Results of Power Frequency Current.
   a. At 5 mA, shock is perceptible.
   b. At 10 mA, a person may not be able to voluntarily let go of the hazard.
   c. At about 40 mA, the shock, if lasting for 1 second or longer, may be fatal due to ventricular fibrillation.
   d. Further increasing current leads to burns and cardiac arrest.

(2) Results of Direct Current.
   a. A dc current of 2 mA is perceptible.
   b. A dc current of 10 mA is considered the threshold of the let-go current.

(3) Results of Voltage. A voltage of 30 V rms, or 60 V dc, is considered safe except when the skin is broken the internal body resistance can be as low as 500 ohms so fatalities can occur.

(4) Results of Short Contact.
   a. For contact less than 0.1 second and with currents just greater than 0.5 mA, ventricular fibrillation may occur only if the shock is in a vulnerable part of the cardiac cycle.
   b. For contact of less than 0.1 second and with currents of several amperes, ventricular fibrillation may occur if the shock is in a vulnerable part of the cardiac cycle.
   c. For contact of greater than 0.8 second and with currents just greater than 0.5 A, cardiac arrest (reversible) may occur.
   d. For contact greater than 0.8 second and with currents of several amperes, burns and death are probable.

(5) Results of ac at Frequencies Above 100 Hz. When the threshold of perception increases from 10 kHz to 100 kHz, the threshold of let-go current increases from 10 mA to 100 mA.

(6) Effects of Waveshape. Contact with voltages from phase controls usually causes effects between those of ac and dc sources.

(7) Effects of Capacitive Discharge.
   a. A circuit of capacitance of 1 microfarad having a 10 kV capacitor charge may cause ventricular fibrillation.
   b. A circuit of capacitance of 20 microfarad having a 10 kV capacitor charge may be dangerous and probably cause ventricular fibrillation.

340.6 Hazards Associated with Power Electronic Equipment. Employer and employees shall be aware of the hazards associated with the following:

(1) High voltages within the power supplies
(2) Radio frequency energy–induced high voltages
(3) Effects of radio frequency, RF, fields in the vicinity of antennas and antenna transmission lines, which can introduce electrical shock and burns
(4) Ionizing (X-radiation) hazards from magnetrons, klystrons, thyratrons, cathode-ray tubes, and similar devices
(5) Non-ionizing RF radiation hazards from the following:
   a. Radar equipment
   b. Radio communication equipment, including broadcast transmitters
   c. Satellite earth-transmitters

Copyright National Fire Protection Association
Provided by IHS under license with NFPA
No reproduction or networking permitted without license from IHS
Not for Resale

d. Industrial scientific and medical equipment
e. RF induction heaters and dielectric heaters
f. Industrial microwave heaters and diathermy radiators

340.7 Specific Measures for Personnel Safety.

(A) Employer Responsibility. The employer shall be responsible for the following:

(1) Proper training and supervision by properly qualified personnel including the following:
   a. The nature of the associated hazard
   b. Strategies to minimize the hazard
   c. Methods of avoiding or protecting against the hazard
   d. The necessity of reporting any hazardous incident
(2) Properly installed equipment.
(3) Proper access to the equipment.
(4) Availability of the correct tools for operation and maintenance.
(5) Proper identification and guarding of dangerous equipment.
(6) Provision of complete and accurate circuit diagrams and other published information to the employee prior to the employee starting work. The circuit diagrams should be marked to indicate the hazardous components.
(7) Maintenance of clear and clean work areas around the equipment to be worked.
(8) Provision of adequate and proper illumination of the work area.

(B) Employee Responsibility. The employee is responsible for the following:

(1) Being continuously alert and aware of the possible hazards
(2) Using the proper tools and procedures for the work
(3) Informing the employer of malfunctioning protective measures, such as faulty or inoperable enclosures and locking schemes
(4) Examining all documents provided by the employer relevant to the work, especially those documents indicating the hazardous components location
(5) Maintaining good housekeeping around the equipment and work space
(6) Reporting any hazardous incident

Copyright National Fire Protection Association
Provided by IHS under license with NFPA
No reproduction or networking permitted without license from IHS
Not for Resale

Chapter 4 Installation Safety Requirements

ARTICLE 400
General Requirements for Electrical Installations

I. General

400.1 Scope.

(A) Introduction. The requirements contained in Chapter 4 shall be based on the provisions of NFPA 70, *National Electrical Code*. Where installations of electric conductors and equipment have been found to conform with the safety requirements of the *National Electrical Code* in use at the time of installation by governmental bodies or agencies having legal jurisdiction for enforcement of the *National Electrical Code*, this conformance shall be prima facie evidence that such installations were adequately designed and installed.

(B) Arrangement of the Chapter. Chapter 4 of this standard is divided into six articles. Article 400, 410, and 420 apply generally. Article 430 applies to specific-purpose equipment installations. Articles 440 and 450 apply to hazardous (classified) locations and special systems. Articles 430, 440, and 450 supplement or modify the general rules, and 450.5 covers communications systems and is independent of the other paragraphs and chapters except where specifically referenced. Articles 400, 410, and 420 apply except as amended by Articles 430, 440, and 450 for the particular condition.

400.2 Approval. The conductors and equipment required or permitted by this standard shall be acceptable only if approved.

FPN: See the definitions of *Approved, Identified, Labeled,* and *Listed* in Article 100.

400.3 Examination, Identification, Installation, and Use of Equipment.

(A) Examination. In judging equipment, considerations such as the following shall be evaluated:

(1) Suitability for installation and use in conformity with the provisions of this standard

FPN: Suitability of equipment use can be identified by a description marked on or provided with a product to identify the suitability of the product for a specific purpose, environment, or application. Suitability of equipment can be evidenced by listing or labeling.

(2) Mechanical strength and durability, including, for parts designed to enclose and protect other equipment, the adequacy of the protection thus provided

(3) Wire-bending and connection space
(4) Electrical insulation
(5) Heating effects under normal conditions of use and also under abnormal conditions likely to arise in service
(6) Arcing effects
(7) Classification by type, size, voltage, current capacity, and specific use
(8) Other factors that contribute to the practical safeguarding of persons using or likely to come in contact with the equipment

(B) Installation and Use. Listed or labeled equipment shall be installed and used in accordance with any instructions included in the listing or labeling.

400.4 Insulation Integrity. Completed wiring installations shall be free from short circuits and from grounds other than as required or permitted in conformity with this standard.

400.5 Interrupting Rating. Equipment intended to interrupt current at fault levels shall have an interrupting rating sufficient for the nominal circuit voltage and the current that is available at the line terminals of the equipment. Equipment intended to interrupt current at other than fault levels shall have an interrupting rating at nominal circuit voltage sufficient for the current that must be interrupted.

400.6 Circuit Impedance and Other Characteristics. The overcurrent protective devices, the total impedance, the component short-circuit current ratings, and other characteristics of the circuit to be protected shall be selected and coordinated to permit the circuit-protective devices used to clear a fault to do so without extensive damage to the electrical components of the circuit. This fault shall be assumed to be either between two or more of the circuit conductors or between any circuit conductor and the grounding conductor or enclosing metal raceway. Listed products applied in accordance with their listing shall be considered to meet the requirements of this section.

400.7 Deteriorating Agents.

(A) Location. Unless identified for use in the operating environment, no conductors or equipment shall be located in damp or wet locations; where exposed to gases, fumes, vapors, liquids, or other agents that have a deteriorating effect on the conductors or equipment; or where exposed to excessive temperatures.

FPN No. 1: In general, areas where acids and alkali chemicals are handled and stored could present such corrosive conditions, particularly when wet or damp. Severe

Copyright National Fire Protection Association
Provided by IHS under license with NFPA
No reproduction or networking permitted without license from IHS
Not for Resale

corrosive conditions could also be present in portions of meat-packing plants, tanneries, glue houses, and some stables; in installations immediately adjacent to a seashore and swimming pool areas; in areas where chemical deicers are used; and in storage cellars or rooms for hides, casings, fertilizer, salt, and bulk chemicals.

FPN No. 2: Some cleaning and lubricating compounds can cause severe deterioration of many plastic materials used for insulating and structural applications in equipment.

(B) Protection of Type 1 Equipment. Equipment identified only as "dry locations," "Type 1," or "indoor use only" shall be protected against permanent damage from the weather during building construction.

400.8 Mechanical Execution of Work. Electric equipment shall be installed in a neat and workmanlike manner.

(A) Unused Openings. Unused cable or raceway openings in boxes, raceways, auxiliary gutters, cabinets, cutout boxes, meter socket enclosures, equipment cases, or housings shall be effectively closed to afford protection substantially equivalent to the wall of the equipment. Where metallic plugs or plates are used with nonmetallic enclosures, they shall be recessed at least 6 mm (¼ in.) from the outer surface of the enclosure.

(B) Subsurface Enclosures. Conductors shall be racked to provide ready and safe access in underground and subsurface enclosures into which persons enter for installation and maintenance.

(C) Integrity of Electric Equipment and Connections. Internal parts of electric equipment, including busbars, wiring terminals, insulators, and other surfaces, shall not be damaged or contaminated by foreign materials such as paint, plaster, cleaners, abrasives, or corrosive residues. There shall be no damaged parts, such as parts that are broken; bent; cut; or deteriorated by corrosion, chemical action, or overheating, that could adversely affect safe operation or mechanical strength of the equipment.

400.9 Mounting and Cooling of Equipment.

(A) Mounting. Electric equipment shall be firmly secured to the surface on which it is mounted. Wooden plugs driven into holes in masonry, concrete, plaster, or similar materials shall not be used.

(B) Cooling. Electric equipment that depends on the natural circulation of air and convection principles for cooling of exposed surfaces shall be installed so that room airflow over such surfaces is not prevented by walls or by adjacent installed equipment. For equipment designed for floor mounting, clearance between top surfaces and adjacent surfaces shall be provided to dissipate rising warm air. Electric equipment provided with ventilating openings shall be installed so that walls or other obstructions do not prevent the free circulation of air through the equipment.

400.10 Electrical Connections. Because of different characteristics of dissimilar metals, devices such as pressure terminals or pressure splicing connectors and soldering lugs shall be identified for the material of the conductor and shall be properly installed and used. Conductors of dissimilar metals shall not be intermixed in a terminal or splicing connector where physical contact occurs between dissimilar conductors (such as copper and aluminum, copper and copper-clad aluminum, or aluminum and copper-clad aluminum), unless the device is identified for the purpose and conditions of use. Materials such as solder, fluxes, inhibitors, and compounds, where employed, shall be suitable for the use and shall be of a type that will not adversely affect the conductors, installation, or equipment.

FPN: Many terminations and equipment are marked with a tightening torque.

(A) Terminals. Connection of conductors to terminal parts shall ensure a thoroughly good connection without damaging the conductors and shall be made by means of pressure connectors (including set-screw type), solder lugs, or splices to flexible leads. Connection by means of wire-bending screws or studs and nuts having upturned lugs or equivalent shall be permitted for 10 AWG or smaller conductors. Terminals for more than one conductor and terminals used to connect aluminum shall be so identified.

(B) Splices. Conductors shall be spliced or joined with splicing devices identified for the use or by brazing, welding, or soldering with a fusible metal or alloy. Soldered splices shall first be spliced or joined so as to be mechanically and electrically secure without solder and then be soldered. All splices and joints and the free ends of conductors shall be covered with an insulation equivalent to that of the conductors or with an insulating device identified for the purpose. Wire connectors or splicing means installed on conductors for direct burial shall be listed for such use.

400.11 Flash Protection. Switchboards, panelboards, industrial control panels, and motor control centers that are in other than dwelling occupancies and are likely to require examination, adjustment, servicing, or maintenance while energized shall be field marked to warn qualified persons of potential electric arc flash hazards. The marking shall be located so as to be clearly visible to qualified persons before examination, adjustment, servicing, or maintenance of the equipment.

400.12 Arcing Parts. Parts of electric equipment that in ordinary operation produce arcs, sparks, flames, or molten metal shall be enclosed or separated and isolated from all combustible material.

Copyright National Fire Protection Association
Provided by IHS under license with NFPA
No reproduction or networking permitted without license from IHS
Not for Resale

400.13 Marking. The manufacturer's name, trademark, or other descriptive marking by which the organization responsible for the product can be identified shall be placed on all electric equipment. Other markings that indicate voltage, current, wattage, or other ratings shall be provided as specified elsewhere in this standard. The marking shall be of sufficient durability to withstand the environment involved.

400.14 Identification of Disconnecting Means.

(A) General. Each disconnecting means shall be legibly marked to indicate its purpose unless located and arranged so the purpose is evident. The marking shall be of sufficient durability to withstand the environment involved.

(B) Series Combination Ratings. Where circuit breakers or fuses are applied in compliance with the series combination ratings marked on the equipment by the manufacturer, the equipment enclosure(s) shall be legibly marked in the field to indicate the equipment has been applied with a series combination rating. The additional series combination interrupting rating shall be marked on the end use equipment, such as switchboards and panelboards. The marking shall be readily visible and state the following:

CAUTION
SERIES COMBINATION SYSTEM RATED __ AMPERES. IDENTIFIED REPLACEMENT COMPONENTS REQUIRED

II. 600 Volts, Nominal, or Less

400.15 Spaces About Electric Equipment. Sufficient access and working space shall be provided and maintained about all electric equipment to permit ready and safe operation and maintenance of such equipment. Enclosures that house electric apparatus and are controlled by lock and key shall be considered accessible to qualified persons.

(A) Working Space. Working space for equipment operating at 600 volts, nominal, or less to ground and likely to require examination, adjustment, servicing, or maintenance while energized shall comply with the dimensions of 400.15(A)(1), 400.15(A)(2), and 400.15(A)(3) or as required or permitted elsewhere in this standard.

(1) Depth of Working Space. The depth of the working space in the direction of live parts shall be not less than that indicated in Table 400.15(A)(1) unless the requirements of 400.15(A)(1)(a), 400.15(A)(1)(b), or 400.15(A)(1)(c) are met. Distances shall be measured from the exposed live parts if such are exposed or from the enclosure or opening if the live parts are enclosed.

Table 400.15(A)(1) Working Spaces

Nominal Voltage to Ground	Minimum Clear Distance					
	Condition 1		Condition 2		Condition 3	
0–150	900 mm	(3 ft)	900 mm	(3 ft)	900 mm	(3 ft)
151–600	900 mm	(3 ft)	1 m	(3½ ft)	1.2 m	(4 ft)

Note: Where the conditions are as follows:
Condition 1 — Exposed live parts on one side and no live or grounded parts on the other side of the working space, or exposed live parts on both sides effectively guarded by suitable wood or other insulating materials. Insulated wire or insulated busbars operating at not over 300 volts to ground shall not be considered live parts.
Condition 2 — Exposed live parts on one side and grounded parts on the other side. Concrete, brick, or tile walls shall be considered as grounded surfaces.
Condition 3 — Exposed live parts on both sides of the work space (not guarded as provided in Condition 1) with the operator between.

(a) Dead-Front Assemblies. Working space shall not be required in the back or sides of assemblies, such as dead-front switchboards or motor control centers, where all connections and all renewable or adjustable parts, such as fuses or switches, are accessible from locations other than the back or sides. Where rear access is required to work on nonelectrical parts on the back of enclosed equipment, a minimum horizontal working space of 762 mm (30 in.) shall be provided.

(b) Low Voltage. By special permission, smaller working spaces shall be permitted where all uninsulated parts operate at not greater than 30 volts rms, 42 volts peak, or 60 volts dc.

(c) Existing Buildings. In existing buildings where electric equipment is being replaced, Condition 2 working clearance shall be permitted between dead-front switchboards, panelboards, or motor control centers located across the aisle from each other where conditions of maintenance and supervision ensure that written procedures have been adopted to prohibit equipment on both sides of the aisle from being open at the same time. Qualified persons who are authorized will service the installation.

(2) Width of Working Space. The width of the working space in front of the electric equipment shall be the width of the equipment or 750 mm (30 in.), whichever is greater. In all cases, the work space shall permit at least a 90 degree opening of equipment doors or hinged panels.

(3) Height of Working Space. The work space shall be clear and extend from the grade, floor, or platform to the height required by 400.15(E). Within the height requirements of this section, other equipment that is associated with the electrical installation and is located above or below the electrical equipment shall be permitted to extend not more than 150 mm (6 in.) beyond the front of the electrical equipment.

Copyright National Fire Protection Association
Provided by IHS under license with NFPA
No reproduction or networking permitted without license from IHS
Not for Resale

(B) Clear Spaces. Working space required by this standard shall not be used for storage. When normally enclosed live parts operating at 50 volts are exposed for inspection or servicing, the working space, if in a passageway or general open space, shall be suitably guarded.

(C) Access and Entrance to Working Space.

(1) Minimum Required. At least one entrance of sufficient area shall be provided to give access to the working space about electric equipment.

(2) Large Equipment. For equipment rated 1200 amperes or more and over 1.8 m (6 ft) wide that contains overcurrent devices, switching devices, or control devices, there shall be one entrance to the required working space not less than 610 mm (24 in.) wide and 2.0 m (6½ ft) high at each end of the working space. Where the entrance has a personnel door(s), the door(s) shall open in the direction of egress and be equipped with panic bars, pressure plates, or other devices that are normally latched but open under simple pressures. A single entrance to the required working space shall be permitted where either of the conditions in 400.15(C)(2)(a) or 400.15(C)(2)(b) is met.

(a) Unobstructed Exit. Where the location permits a continuous and unobstructed way of exit travel, a single entrance to the working space shall be permitted.

(b) Extra Working Space. Where the depth of the working space is twice that required by 400.15(A)(1), a single entrance shall be permitted. It shall be located so that the distance from the equipment to the nearest edge of the entrance is not less than the minimum clear distance specified in Table 400.15(A)(1) for equipment operating at that voltage and in that condition.

(D) Illumination. Illumination shall be provided for all working spaces about service equipment, switchboards, panelboards, or motor control centers installed indoors. Additional lighting outlets shall not be required where the work space is illuminated by an adjacent light source. In electrical equipment rooms, the illumination shall not be controlled by automatic means only.

(E) Headroom. The minimum headroom of working spaces about service equipment, switchboards, panelboards, or motor control centers shall be 2.0 m (6½ ft). Where the electrical equipment exceeds 2.0 m (6½ ft) in height, the minimum headroom shall not be less than the height of the equipment.

(F) Dedicated Equipment Space. All switchboards, panelboards, distribution boards, and motor control centers shall be located in dedicated spaces and protected from damage.

Exception: Control equipment that by its very nature or because of other rules of the standard must be adjacent to or within sight of its operating machinery shall be permitted in those locations.

(1) Indoor. Indoor installations shall comply with 400.15(F)(1)(a) through 400.15(F)(1)(d).

(a) Dedicated Electrical Space. The space equal to the width and depth of the equipment and extending from the floor to a height of 1.8 m (6 ft) above the equipment or to the structural ceiling, whichever is lower, shall be dedicated to the electrical installation. No piping, ducts, leak protection apparatus, or equipment foreign to the electrical installation shall be located in this zone.

Exception: Suspended ceilings with removable panels shall be permitted within the 1.8 m (6 ft) zone.

(b) Foreign Systems. The area above the dedicated space required in 400.15(F)(1) shall be permitted to contain foreign systems, provided protection is installed to avoid damage to the electrical equipment from condensation, leaks, or breaks in such foreign systems.

(c) Sprinkler Protection. Sprinkler protection shall be permitted for the dedicated space where the piping complies with this section.

(d) Suspended Ceilings. A dropped, suspended, or similar ceiling that does not add strength to the building structure shall not be considered a structural ceiling.

(2) Outdoor. Outdoor electric equipment shall be installed in suitable enclosures and shall be protected from accidental contact by unauthorized personnel, or by vehicular traffic, or by accidental spillage or leakage from piping systems. The working clearance space shall include the zone described in 400.15(A). No architectural appurtenance or other equipment shall be located in this zone.

400.16 Guarding of Live Parts.

(A) Live Parts Guarded Against Accidental Contact. Except as elsewhere required or permitted by this standard, live parts of electric equipment operating at 50 volts or more shall be guarded against accidental contact by approved enclosures or by any of the following means:

(1) By location in a room, vault, or similar enclosure that is accessible only to qualified persons.
(2) By suitable permanent, substantial partitions or screens arranged so that only qualified persons have access to the space within reach of the live parts. Any openings in such partitions or screens shall be sized and located so that persons are not likely to come into accidental contact with the live parts or to bring conducting objects into contact with them.
(3) By location on a suitable balcony, gallery, or platform elevated and arranged so as to exclude unqualified persons.
(4) By elevation of 2.5 m (8 ft) or more above the floor or other working surface.

Copyright National Fire Protection Association
Provided by IHS under license with NFPA
No reproduction or networking permitted without license from IHS
Not for Resale

(B) Prevention of Physical Damage. In locations where electric equipment is likely to be exposed to physical damage, enclosures or guards shall be so arranged and of such strength as to prevent such damage.

(C) Warning Signs. Entrances to rooms and other guarded locations that contain exposed live parts operating at 50 volts shall be marked with conspicuous warning signs forbidding unqualified persons to enter.

III. Over 600 Volts, Nominal

400.17 General. Conductors and equipment used on circuits over 600 volts, nominal, shall comply with 400.1(A) of this standard and with the following sections, which supplement or modify 400.1(A). In no case shall the provisions of 400.18, 400.19, and 400.20 apply to equipment on the supply side of the service point.

400.18 Enclosure for Electrical Installations.

(A) Indoor or Controlled or Locked Installations. Electrical installations in a vault, room, or closet or in an area surrounded by a wall, screen, or fence, access to which is controlled by lock and key or other approved means, shall be considered to be accessible to qualified persons only. The type of enclosure used in a given case shall be designed and constructed according to the nature and degree of the hazard(s) associated with the installation.

(B) Outdoor Installations. For installations other than equipment as described in 400.18(E), a wall, screen, or fence shall be used to enclose an outdoor electrical installation to deter access by unqualified persons. A fence shall not be less than 2.1 m (7 ft) in height or a combination of 1.8 m (6 ft) or more of fence fabric and a 300 mm (1 ft) or more extension utilizing three or more strands of barbed wire or equivalent. The distance from the fence to live parts shall be not less than that given in Table 400.18(B).

FPN: For clearances of conductors for specific system voltages and typical BIL ratings, see ANSI C2-1997, *National Electrical Safety Code*.

Table 400.18(B) Minimum Distance from Fence to Live Parts

	Minimum Distance to Live Parts	
Nominal Voltage	**m**	**ft**
601–13,799	3.05	10
13,800–230,000	4.57	15
Over 230,000	5.49	18

(C) Fire Resistivity of Electrical Vaults. The walls, roof, floors, and doorways of vaults containing conductors and equipment over 600 volts, nominal, shall be constructed of material with structural strength adequate for the conditions, with a minimum fire rating of 3 hours. The floors of vaults in contact with the earth shall be of concrete that is not less than 4 in. (102 mm) thick, but where the vault is constructed with a vacant space or other stories below it, the floor shall have adequate structural strength for the load imposed on it and a minimum fire resistance of 3 hours. For the purpose of 400.18(A), studs and wallboards shall not be considered acceptable.

(D) Indoor Installations.

(1) In Places Accessible to Unqualified Persons. Indoor electrical installations that are accessible to unqualified persons shall be made with metal-enclosed equipment. Metal-enclosed switchgear, unit substations, transformers, pull boxes, connection boxes, and other similar associated equipment shall be marked with appropriate caution signs. Openings in ventilated dry-type transformers and similar openings in other equipment shall be designed so that foreign objects inserted through these openings are deflected from energized parts.

(2) In Places Accessible to Qualified Persons Only. Indoor electrical installations considered accessible only to qualified persons in accordance with this section shall comply with 400.19.

(E) Outdoor Installations.

(1) In Places Accessible to Unqualified Persons. Outdoor electrical installations that are open to unqualified persons shall comply with 410.7.

FPN: For clearances of conductors for system voltages over 600 volts, nominal, see ANSI C2-2002, *National Electrical Safety Code*.

(2) In Places Accessible to Qualified Persons Only. Outdoor electrical installations that have exposed live parts operating at 50 volts shall be accessible only to qualified persons in accordance with 400.18(A) and shall comply with 400.19.

(F) Enclosed Equipment Accessible to Unqualified Persons. Ventilating or similar openings in equipment shall be designed such that foreign objects inserted through these openings are deflected from energized parts. Where exposed to physical damage from vehicular traffic, suitable guards shall be provided. Nonmetallic or metal-enclosed equipment located outdoors and accessible to the general public shall be designed so that exposed nuts or bolts cannot be readily removed, permitting access to live parts. Where nonmetallic or metal-enclosed equipment is accessible to the general public and the bottom of the enclosure is less than 2.5 m (8 ft) above

Copyright National Fire Protection Association
Provided by IHS under license with NFPA
No reproduction or networking permitted without license from IHS
Not for Resale

the floor or grade level, the enclosure door or hinged cover shall be kept locked. Doors and covers of enclosures used solely as pull boxes, splice boxes, or junction boxes shall be locked, bolted, or screwed on. Underground box covers that weigh over 45.4 kg (100 lb) shall be considered as meeting this requirement.

400.19 Work Space About Equipment. Sufficient space shall be provided and maintained about electric equipment to permit ready and safe operation and maintenance of such equipment. Where energized parts are exposed, the minimum clear work space shall not be less than 2.0 m (6½ ft) high (measured vertically from the floor or platform), or less than 900 mm (3 ft) wide (measured parallel to the equipment). The depth shall be as required in 400.21. In all cases, the work space shall permit at least a 90-degree opening of doors or hinged panels.

400.20 Entrance and Access to Work Space.

(A) Entrance. At least one entrance not less than 610 mm (24 in.) wide and 2.0 m (6½ ft) high shall be provided to give access to the working space about electric equipment. Where the entrance has a personnel door(s), the door(s) shall open in the direction of egress and be equipped with panic bars, pressure plates, or other devices that are normally latched but open under simple pressure.

(1) Large Equipment. On switchboard and control panels exceeding 1.8 m (6 ft) in width, there shall be one entrance at each end of the equipment. A single entrance to the required working space shall be permitted where either of the conditions in 400.20(A)(1)(a) or 400.20(A)(1)(b) is met.

(a) Unobstructed Exit. Where the location permits a continuous and unobstructed way of exit travel, a single entrance to the working space shall be permitted.

(b) Extra Working Space. Where the depth of the working space is twice that required by 400.21, a single entrance shall be permitted. It shall be located so that the distance from the equipment to the nearest edge is not less than the minimum clear distance specified in Table 400.21 for equipment operating at that voltage and in that condition.

(2) Guarding. Where bare energized parts at any voltage or insulated energized parts above 600 volts, nominal, to ground are located adjacent to such entrance, they shall be suitably guarded.

(B) Access. Permanent ladders or stairways shall be provided to give safe access to the working space around electric equipment installed on platforms, balconies, mezzanine floors, or in attic or roof rooms or spaces.

400.21 Work Space and Guarding.

(A) Working Space. Except as elsewhere required or permitted in this standard, the minimum clear working space in the direction of access to live parts of electric equipment shall be not less than specified in Table 400.21. Distances shall be measured from the live parts, if such are exposed, or from the enclosure front or opening if such are enclosed.

Exception: Working space shall not be required in back of equipment such as dead-front switchboards or control assemblies where there are no renewable or adjustable parts (such as fuses or switches) on the back and where all connections are accessible from locations other than the back. Where rear access is required to work on the deenergized parts on the back of enclosed equipment, a minimum working space of 750 mm (30 in.) horizontally shall be provided.

Table 400.21 Minimum Depth of Clear Working Space at Electric Equipment

Nominal Voltage to Ground	Minimum Clear Distance					
	Condition 1		Condition 2		Condition 3	
	m	ft	m	ft	m	ft
601–2500 V	0.9	3	1.2	4	1.5	5
2501–9000 V	1.2	4	1.5	5	1.8	6
9001–25,000 V	1.5	5	1.8	6	2.8	9
25,001–75 kV	1.8	6	2.5	8	3.0	10
Above 75 kV	2.5	8	3.0	10	3.7	12

Note: Where the conditions are as follows:
Condition 1—Exposed live parts on one side and no live or grounded parts on the other side of the working space, or exposed live parts on both sides effectively guarded by suitable wood or other insulating materials. Insulated wire or insulated busbars operating at not over 300 volts shall not be considered live parts.
Condition 2—Exposed live parts on one side and grounded parts on the other side. Concrete, brick, or tile walls will be considered as grounded surfaces.
Condition 3—Exposed live parts on both sides of the work space (not guarded as provided in Condition 1) with the operator between.

(B) Separation from Low-Voltage Equipment. Where switches, cutouts, or other equipment operating at 600 volts, nominal, or less are installed in a room or enclosure where there are exposed live parts or exposed wiring operating at over 600 volts, nominal, the high-voltage equipment shall be effectively separated from the space occupied by the low-voltage equipment by a suitable partition, fence, or screen.

Exception: Switches or other equipment operating at 600 volts, nominal, or less and serving only equipment within the high-voltage vault, room, or enclosure shall be permitted to be installed in the high-voltage enclosure, room, or vault if accessible to qualified persons only.

Copyright National Fire Protection Association
Provided by IHS under license with NFPA
No reproduction or networking permitted without license from IHS
Not for Resale

(C) Locked Rooms or Enclosures.

(1) General. The entrances to all buildings, rooms, or enclosures containing exposed live parts or exposed conductors operating at over 600 volts, nominal, shall be kept locked unless such entrances are under the observation of a qualified person at all times.

(2) Warning Signs. Where the voltage exceeds 600 volts, nominal, permanent and conspicuous warning signs shall be provided, reading as follows:

DANGER — HIGH VOLTAGE — KEEP OUT

FPN: For further information on hazard signs and labels, see ANSI Z535.4, *Product Signs and Safety Labels*.

(D) Illumination. Illumination shall be provided for all working spaces about electric equipment. The lighting outlets shall be so arranged that persons changing lamps or making repairs on the lighting system are not endangered by live parts operating at 50 volts or by other equipment. The points of control shall be so located that persons are not likely to come in contact with any live part or moving part of the equipment while turning on the lights.

(E) Elevation of Unguarded Live Parts. Unguarded live parts above working space shall be maintained at elevations not less than required in Table 400.21(E).

(F) Protection of Service Equipment, Metal-Enclosed Power Switchgear, and Industrial Control Assemblies. Pipes or ducts foreign to the electrical installation and requiring periodic maintenance or whose malfunction would endanger the operation of the electrical system shall not be located in the vicinity of the service equipment, metal-enclosed power switchgear, or industrial control assemblies. Protection shall be provided where necessary to avoid damage from condensation leaks and breaks in such foreign systems. Piping and other facilities shall not be considered foreign if provided for fire protection of the electrical installation.

Table 400.21(E) Elevation of Unguarded Live Parts Above Working Space

Nominal Voltage Between Spaces	Elevation	
	m	ft
601–7500 V	2.8	9
7501–35,000 V	2.9	9½
Over 35 kV	2.9 m + 9.5 mm/kV above 35	9½ ft + 0.37 in./kV above 35

ARTICLE 410
Wiring Design and Protection

410.1 Use and Identification of Grounded and Grounding Conductors.

(A) Identification of Conductors. A conductor used as a grounded conductor shall be identifiable and distinguishable from all other conductors.

(B) Polarity of Connections. No grounded conductor shall be attached to any terminal or lead so as to reverse designated polarity.

410.2 Branch Circuits.

(A) Identification of Ungrounded Circuits. Where more than one nominal voltage system exists in a building, each ungrounded conductor of a multiwire branch circuit, where accessible, shall be identified by phase and system. The means of identification shall be permitted to be by separate color coding, marking tape, tagging, or other approved means and shall be permanently posted at each branch circuit panelboard.

(B) Receptacles and Cord Connectors.

(1) Grounding Type. Receptacles installed on 15- and 20-ampere branch circuits shall be of the grounding type. Grounding-type receptacles shall be installed only on circuits of the voltage class and current for which they are rated, except as provided in Table 410.5(B)(2) and Table 410.5(B)(3).

Exception: Nongrounding-type receptacles installed in accordance with 410.2(B)(4)(c).

(2) To Be Grounded. Receptacles and cord connectors that have grounding contacts shall have those contacts effectively grounded.

Exception No. 1: Receptacles mounted on portable and vehicle-mounted generators in accordance with this standard.

Exception No. 2: Replacement receptacles as permitted by 410.2(B)(4).

(3) Methods of Grounding. The grounding contacts of receptacles and cord connectors shall be grounded by connection to the equipment grounding conductor of the circuit supplying the receptacle or cord connector. The branch circuit wiring method shall include or provide an equipment grounding conductor to which the grounding contacts of the receptacle or cord connector shall be connected.

Copyright National Fire Protection Association
Provided by IHS under license with NFPA
No reproduction or networking permitted without license from IHS
Not for Resale

(4) Replacements. Replacement of receptacles shall comply with 410.2(B)(4)(a), 410.2(B)(4)(b), and 410.2(C) as applicable.

(a) Grounding-Type Receptacles. Where a grounding means exists in the receptacle enclosure or a grounding conductor is installed, grounding-type receptacles shall be used and shall be connected to the grounding conductor.

(b) Ground-Fault Circuit Interrupters. Ground-fault circuit-interrupter–protected receptacles shall be provided where replacements are made at receptacle outlets that are required to be so protected elsewhere in this standard.

(C) Non–Grounding-Type Receptacles. Where a grounding means does not exist in the receptacle enclosure, the installation shall comply with (1), (2), or (3):

(1) A non–grounding-type receptacle(s) shall be permitted to be replaced with another non–grounding-type receptacle(s).
(2) A non–grounding-type receptacle(s) shall be permitted to be replaced with a ground-fault circuit-interrupter–type of receptacle(s). Such receptacle shall be marked "No Equipment Ground." An equipment grounding conductor shall not be connected from the ground-fault circuit-interrupter–type receptacle to any outlet supplied from the ground-fault circuit–interrupter receptacle.
(3) A non–grounding-type receptacle(s) shall be permitted to be replaced with a grounding-type receptacle(s) where supplied through a ground-fault circuit-interrupter. Grounding-type receptacles supplied through the ground-fault circuit-interrupter shall be marked "GFCI Protected" and "No Equipment Ground." An equipment grounding conductor shall not be connected between the grounding-type receptacles.

(5) Cord-and-Plug-Connected Equipment. The installation of grounding-type receptacles shall not be used as a requirement that all cord-and-plug-connected equipment be of the grounded type.

(6) Noninterchangeable Types. Receptacles connected to circuits that have different voltages, frequencies, or types of current (ac or dc) on the same premises shall be of such design that the attachment plugs used on these circuits are not interchangeable.

410.3 Identification of Ungrounded Conductors. Where more than one nominal voltage system exists in a building, each ungrounded conductor of a multiwire branch circuit, where accessible, shall be identified by phase and system. This means of identification shall be permitted to be by separate color coding, marking tape, tagging, or other approved means and shall be permanently posted at each branch-circuit panelboard.

410.4 Ground-Fault Circuit-Interrupter Protection for Personnel.

(A) Other Than Dwelling Units. All 125-volt, single-phase, 15- and 20-ampere receptacles installed in the locations specified in (1), (2), and (3) shall have ground-fault circuit-interrupter protection for personnel:

(1) Bathrooms
(2) Rooftops
(3) Kitchens

(B) Ground-Fault Protection for Personnel. Ground-fault protection for personnel for all temporary wiring installations shall be provided to comply with 410.4(B)(1) or 410.4(B)(2). This section shall apply only to temporary wiring installations used to supply temporary power to equipment used by personnel during construction, remodeling, maintenance, repair, or demolition of buildings, structures, equipment or similar activities.

(1) Receptacle Outlets. All 125-volt, single-phase, 15-, 20-, and 30-ampere receptacle outlets that are not a part of the permanent wiring of the building or structure and that are in use by personnel shall have ground-fault circuit-interrupter protection for personnel. If a receptacle(s) is installed or exists as part of the permanent wiring of the building or structure and is used for temporary electric power, ground-fault circuit-interrupter protection for personnel shall be provided. For the purposes of this section, cord sets or devices incorporating listed ground-fault circuit-interrupter protection for personnel identified for portable use shall be permitted.

Exception: In industrial establishments only, where conditions of maintenance and supervision ensure that only qualified personnel are involved, an assured equipment grounding conductor program as specified in 410.4(B)(2) shall be permitted only for those receptacle outlets used to supply equipment that would create a greater hazard if power was interrupted or having a design that is not compatible with GFCI protection.

(2) Use of Other Outlets. Receptacles other than 125-volt, single-phase, 15-, 20-, and 30-ampere receptacles shall have protection in accordance with 410.4(B)(2)(a) or the assured equipment grounding conductor program in accordance with 410.4(B)(2)(b).

(a) GFCI Protection. Ground-fault circuit-interrupter protection for personnel.

(b) Assured Equipment Grounding Conductor Program. A written assured equipment grounding conductor program continuously enforced at the site by one or more designated persons to ensure that equipment grounding conductors for all cord sets, receptacles not part of the permanent wiring of the building or structure, and equipment connected by cord and

Copyright National Fire Protection Association
Provided by IHS under license with NFPA
No reproduction or networking permitted without license from IHS
Not for Resale

plug are installed and maintained. The following tests shall be performed on all cord sets, receptacles not part of the permanent wiring of the building or structure, and cord-and-plug-connected equipment required to be grounded:

(1) All equipment grounding conductors shall be tested for continuity and shall be electrically continuous.
(2) Each receptacle and attachment plug shall be tested for correct attachment of the equipment grounding conductor. The equipment grounding conductor shall be connected to its proper terminal.
(3) All required tests shall be performed as follows:
   a. Before first use on site
   b. When there is evidence of damage
   c. Before equipment is returned to service following any repairs
   d. At intervals not exceeding 3 months
(4) The test required by 410.4(B)(2)(b) shall be recorded and made available to the authority having jurisdiction.

410.5 Outlet Devices. Outlet devices shall have an ampere rating that is not less than the load to be served and shall comply with 410.5(A) and 410.5(B).

(A) Lampholders. Where connected to a branch circuit having a rating in excess of 20 amperes, lampholders shall be of the heavy-duty type. A heavy-duty lampholder shall have a rating of not less than 660 watts if of the admedium type and not less than 750 watts if of any other type.

(B) Receptacles.

(1) Single Receptacle on an Individual Branch Circuit. A single receptacle installed on an individual branch circuit shall have an ampere rating of not less than that of the branch circuit.

(2) Total Cord-and-Plug-Connected Load. Where connected to a branch circuit supplying two or more receptacles or outlets, a receptacle shall not supply a total cord-and-plug-connected load in excess of the maximum specified in Table 410.5(B)(2).

(3) Receptacle Ratings. Where connected to a branch circuit supplying two or more receptacles or outlets, receptacle ratings shall conform to the values listed in Table 410.5(B)(3), or, where larger than 50 amperes, the receptacle rating shall not be less than the branch-circuit rating.

Exception: Receptacles for one or more cord-and-plug-connected arc welders shall be permitted to have ampere ratings not less than the minimum branch-circuit conductor ampacity.

410.6 Cord Connections. A receptacle outlet shall be installed wherever flexible cords with attachment plugs are used. Where flexible cords are permitted to be permanently connected, receptacles shall be permitted to be omitted for such cords.

Table 410.5(B)(2) Maximum Cord-and-Plug-Connected Load to Receptacle

Circuit Rating (Amperes)	Receptacle Rating (Amperes)	Maximum Load (Amperes)
15 or 20	15	12
20	20	16
30	30	24

Table 410.5(B)(3) Receptacle Ratings for Various Size Circuits

Circuit Rating (Amperes)	Receptacle Rating (Amperes)
15	Not over 15
20	15 or 20
30	30
40	40 or 50
50	50

410.7 Outside Branch Circuit, Feeder, and Service Conductors, 600 Volts, Nominal, or Less. Sections 410.7(A), 410.7(B), 410.7(C), and 410.7(D) shall apply to branch circuit, feeder, and service conductors run outdoors as open conductors.

(A) Conductors on Poles. Conductors on poles shall have a separation of not less than 300 mm (1 ft) where not placed on racks or brackets. Conductors supported on poles shall provide a horizontal climbing space not less than the following:

(1) Power conductors below communications conductors: 750 mm (30 in.)
(2) Power conductors alone or above communications conductors: 300 volts or less — 600 mm (24 in.); over 300 volts — 750 mm (30 in.)
(3) Communications conductors below power conductors: same as power conductors
(4) Communications conductors alone: no requirement

(B) Clearance from Ground. Overhead spans of open conductors, open multiconductor cables, and service-drop conductors not exceeding 600 volts, nominal, shall conform to the following clearances:

(1) 3.0 m (10 ft) — above finished grade, sidewalks, or from any platform or projection from which they might be reached where the voltage does not exceed 150 volts to ground and accessible to pedestrians only
(2) 3.7 m (12 ft) — over residential property and driveways, and those commercial areas not subject to truck traffic where the voltage does not exceed 300 volts to ground

Copyright National Fire Protection Association
Provided by IHS under license with NFPA
No reproduction or networking permitted without license from IHS
Not for Resale

(3) 4.5 m (15 ft) — for those areas listed in item (2) where the voltage exceeds 300 volts to ground
(4) 5.5 m (18 ft) — over public streets, alleys, roads, parking areas subject to truck traffic, driveways on other than residential property, and other land traversed by vehicles, such as cultivated, grazing, forest, and orchard

(C) Clearance from Building Openings. Open conductors, open multiconductor cables, service-drop conductors, and final spans shall comply with 410.7(C)(1), 410.7(C)(2), and 410.7(C)(3).

(1) Clearance from Windows. Service conductors installed as open conductors or multiconductor cable without an overall outer jacket shall have a clearance of not less than 900 mm (3–ft) from windows designed to be opened, doors, porches, balconies, ladders, stairs, fire escapes, or similar locations.

Exception: Conductors run above the top level of a window shall be permitted to be less than the 900-mm (3-ft) requirement.

(2) Vertical Clearance. The vertical clearance of final spans above, or within 900 mm (3 ft) measured horizontally of, platforms, projections, or surfaces from which they might be reached shall be maintained in accordance with 410.7(B).

(3) Building Openings. Overhead service conductors shall not be installed beneath openings through which materials may be moved, such as openings in farm and commercial buildings, and shall not be installed where they obstruct entrance to these building openings.

(D) Clearances from Buildings for Conductors of Not Over 600 Volts, Nominal, Above Roofs.

(1) General. Overhead spans of open conductors and open multiconductor cables shall have a vertical clearance of not less than 2.5 m (8 ft) above the roof surface.

(2) Vertical Clearance. The vertical clearance above the roof level shall be maintained for a distance not less than 900 mm (3 ft) in all directions from the edge of the roof.

Exception No. 1: The area above a roof surface subject to pedestrian or vehicular traffic shall have a vertical clearance from the roof surface in accordance with the clearance requirements of 410.7(B).

Exception No. 2: Where the voltage between conductors does not exceed 300, and the roof has a slope of 100 mm (4 in.) in 300 mm (12 in.) or greater, a reduction in clearance to 900 mm (3 ft) shall be permitted.

Exception No. 3: Where the voltage between conductors does not exceed 300, a reduction in clearance above only the overhanging portion of the roof to not less than 450 mm (18 in.) shall be permitted if (1) not more than 1.8 m (6 ft) of the conductors, 1.2 m (4 ft) horizontally, pass above the roof overhang and (2) they are terminated at a through-the-roof raceway or approved support.

Exception No. 4: The requirement for maintaining the vertical clearance 900 mm (3 ft) from the edge of the roof shall not apply to the final conductor span where the conductors are attached to the side of a building.

(E) Location of Outdoor Lamps. Locations of lamps for outdoor lighting shall be below all energized conductors, transformers, or other electric utilization equipment, unless either of the following applies:

(1) Clearances or other safeguards are provided for relamping operations.
(2) Equipment is controlled by a disconnecting means that can be locked in the open position.

410.8 Services.

(A) Service Equipment — Disconnecting Means. Means shall be provided to disconnect all conductors in a building or other structure from the service-entrance conductors.

(1) Location. The service disconnecting means shall be installed in accordance with (a), (b), and (c) of this section.

(a) Readily Accessible Location. The service disconnecting means shall be installed at a readily accessible location either outside of a building or structure or inside nearest the point of entrance of the service conductors.

(b) Bathrooms. Service disconnecting means shall not be installed in bathrooms.

(c) Remote Control. Where a remote control device(s) is used to actuate the service disconnecting means, the service disconnecting means shall be located in accordance with 410.8(A)(1)(a).

(2) Marking. Each service disconnect shall be permanently marked to identify it as a service disconnect.

(3) Suitable for Use. Each service disconnecting means shall be suitable for the prevailing conditions.

(B) Services Exceeding 600 Volts, Nominal.

(1) Locked Rooms or Enclosures. The entrances to all buildings, rooms, or enclosures containing exposed live parts or exposed conductors operating at over 600 volts, nominal, shall be kept locked unless such entrances are under the observation of a qualified person at all times.

(2) Warning Signs. Where the voltage exceeds 600 volts, nominal, permanent and conspicuous warning signs shall be provided, reading as follows:

DANGER — HIGH VOLTAGE — KEEP OUT

FPN: For further information on hazard signs and labels, see ANSI Z535-4, *Product Signs and Safety Labels*.

Copyright National Fire Protection Association
Provided by IHS under license with NFPA
No reproduction or networking permitted without license from IHS
Not for Resale

410.9 Overcurrent Protection.

(A) 600 Volts, Nominal, or Less.

(1) Protection of Conductors and Equipment. Conductors and equipment shall be protected from overcurrent in accordance with their ability to safely conduct current.

(2) Grounded Conductors. No overcurrent device shall be connected in series with any conductor that is intentionally grounded, unless one of the following two conditions is met:

(1) The overcurrent device opens all conductors of the circuit, including the grounded conductor, and is designed so that no pole can operate independently.
(2) Where required for motor overload protection.

(3) Disconnecting Means for Fuses. A disconnecting means shall be provided on the supply side of all fuses in circuits over 150 volts to ground and of cartridge fuses in circuits of any voltage where accessible to other than qualified persons so that each individual circuit containing fuses can be independently disconnected from the source of power. A current-limiting device without a disconnecting means shall be permitted on the supply side of the service disconnecting means. A single disconnecting means shall be permitted on the supply side of more than one set of fuses as permitted by the exception to 420.10(E)(2)(e), for group operation of motors and for fixed electric space-heating equipment.

(4) Arcing or Suddenly Moving Parts. Arcing or suddenly moving parts shall comply with (a) and (b) of this section.

(a) Location. Fuses and circuit breakers shall be located or shielded so that persons will not be burned or otherwise injured by their operation.

(b) Suddenly Moving Parts. Handles or levers of circuit breakers, and similar parts that may move suddenly in such a way that persons in the vicinity are likely to be injured by being struck by them, shall be guarded or isolated.

(5) Circuit Breakers. Circuit breakers shall clearly indicate whether they are in the open off or closed on position. Where circuit breaker handles are operated vertically rather than rotationally or horizontally, the up position of the handle shall be the on position.

(a) Used as Switches. Circuit breakers used as switches in 120 volt and 277 volt fluorescent lighting circuits shall be listed and shall be marked SWD or HID. Circuit breakers used as switches in high-intensity discharge lighting circuits shall be listed and shall be marked as HID.

(b) Applications. A circuit breaker with a straight voltage rating, such as 240 V or 480 V, shall be permitted to be applied in a circuit in which the nominal voltage between any two conductors does not exceed the circuit breaker's voltage rating. A two-pole circuit breaker shall not be used for protecting a 3-phase, corner-grounded delta circuit unless the circuit breaker is marked 1 ϕ – 3 ϕ to indicate such suitability. A circuit breaker with a slash rating, such as 120/240 V or 480Y/277 V, shall be permitted to be applied in a solidly grounded circuit where the nominal voltage of any conductor to ground does not exceed the lower of the two values of the circuit breaker's voltage rating and the nominal voltage between any two conductors does not exceed the higher value of the circuit breaker's voltage rating.

FPN: Proper application of molded case circuit breakers on 3-phase systems, other than solidly grounded wye, particularly on corner-grounded delta systems, considers the circuit breaker's individual pole-interrupting capability.

(B) Overcurrent Protection, Over 600 Volts, Nominal Feeders and Branch Circuits.

(1) Location and Type of Protection. Feeder and branch-circuit conductors shall have overcurrent protection in each ungrounded conductor located at the point where the conductor receives its supply or at an alternative location in the circuit when designed under engineering supervision that includes but is not limited to consideration of the appropriate fault studies and time-current coordination analysis of the protective devices and the conductor damage curves. The overcurrent protection shall be permitted to be provided by either 410.9(B)(1)(a) or 410.9(B)(1)(b).

(a) Overcurrent Relays and Current Transformers. Circuit breakers used for overcurrent protection of 3-phase circuits shall have a minimum of three overcurrent relay elements operated from three current transformers. The separate overcurrent relay elements (or protective functions) shall be permitted to be part of a single electronic protective relay unit. On 3-phase, 3-wire circuits, an overcurrent relay in the residual circuit of the current transformers shall be permitted to replace one of the phase relays. An overcurrent relay element, operated from a current transformer that links all phases of a 3-phase, 3-wire circuit, shall be permitted to replace the residual relay element and one of the phase-conductor current transformers. Where the neutral is not regrounded on the load side of the circuit, the current transformer shall be permitted to link all 3-phase conductors and the grounded circuit conductor (neutral).

(b) Fuses. A fuse shall be connected in series with each ungrounded conductor.

(2) Protective Devices. The protective device(s) shall be capable of detecting and interrupting all values of current that can occur at their location in excess of their trip setting or melting point.

Copyright National Fire Protection Association
Provided by IHS under license with NFPA
No reproduction or networking permitted without license from IHS
Not for Resale

(3) Conductor Protection. The operating time of the protective device, the available short-circuit current, and the conductor used shall be coordinated to prevent damaging or dangerous temperatures in conductors or conductor insulation under short-circuit conditions.

(C) Additional Requirements for Feeders.

(1) Rating or Setting of Overcurrent Protective Devices. The continuous ampere rating of a fuse shall not exceed three times the ampacity of the conductors. The long-time trip element setting of a breaker or the minimum trip setting of an electronically actuated fuse shall not exceed six times the ampacity of the conductor. For fire pumps, conductors shall be permitted to be protected for overcurrent.

(2) Feeder Taps. Conductors tapped to a feeder or connection to a transformer secondary shall be permitted to be protected by the feeder overcurrent device where that overcurrent device also protects the tap conductor.

410.10 Grounding. Sections 410.10(A) through 410.10(G) cover grounding requirements for systems, circuits, and equipment.

(A) Grounding Path. The path to ground from circuits, equipment, and enclosures shall be permanent, continuous, and effective.

(B) General Bonding. Bonding shall be provided where necessary to ensure electrical continuity and the capacity to conduct safely any fault current likely to be imposed.

(C) Systems to Be Grounded. The following systems, which supply premises wiring, shall be grounded:

(1) Three-Wire, Direct-Current Systems. The neutral conductor of all 3-wire, dc systems supplying premises wiring shall be grounded.

(2) Two-Wire, Direct-Current Systems. A 2-wire, dc system supplying premises wiring and operating at greater than 50 volts but not greater than 300 volts shall be grounded.

Exception No. 1: A system equipped with a ground detector and supplying only industrial equipment in limited areas shall not be required to be grounded.

Exception No. 2: A rectifier-derived dc system supplied from an ac system complying with 410.10(C) shall not be required.

Exception No. 3: Direct-current fire alarm circuits having a maximum current of 0.030 ampere shall not be required to be grounded.

(3) Alternating-Current Circuits of Less Than 50 Volts. Alternating-current circuits of less than 50 volts shall be grounded under any of the following conditions:

(1) Where supplied by transformers, if the transformer supply systems exceeds 150 volts to ground
(2) Where supplied by transformers, if the transformer supply system is ungrounded
(3) Where installed as overhead conductors outside of buildings

(4) Alternating-Current Systems of 50 Volts to 1000 Volts. AC systems of 50 volts to 1000 volts that supply premises wiring systems shall be grounded under any of the following conditions:

(1) Where the system can be grounded so that the maximum voltage to ground on the ungrounded conductors does not exceed 150 volts
(2) Where the system is rated 3-phase, 4-wire, wye connected in which the neutral is used as a circuit conductor
(3) Where the system is rated 3-phase, 4-wire, delta connected in which the midpoint of one phase winding is used as a circuit conductor

(5) Alternating-Current Systems of 50 Volts to 1000 Volts Not Required to Be Grounded. The following ac systems of 50 volts to 1000 volts shall be permitted to be grounded but shall not be required to be grounded:

(1) Electrical systems used exclusively to supply industrial electric furnaces for melting, refining, tempering, and the like
(2) Separately derived systems used exclusively for rectifiers that supply only adjustable speed industrial drives
(3) Separately derived systems supplied by transformers that have a primary voltage rating less than 1000 volts, provided that all of the following conditions are met:
   a. The system is used exclusively for control circuits.
   b. The conditions of maintenance and supervision ensure that only qualified persons service the installation.
   c. Continuity of control power is required.
   d. Ground detectors are installed on the control system.
(4) Where high-impedance grounded neutral systems in which a grounding impedance, usually a resistor, limits the ground-fault current to a low value shall be permitted for 3-phase ac systems of 480 volts to 1000 volts where all of the following conditions are met:
   a. The conditions of maintenance and supervision ensure that only qualified persons service the installation.
   b. Continuity of power is required.
   c. Ground detectors are installed on the system.
   d. Line-to-neutral loads are not served.
(5) Other systems that are not required to be grounded in accordance with the requirements of 410.10(C).

(6) Alternating Current Systems of 1 kV and Over. Alternating-current systems supplying mobile or portable equipment shall be grounded. Where supplying other than mobile or portable equipment, such systems shall be permitted to be grounded.

Copyright National Fire Protection Association
Provided by IHS under license with NFPA
No reproduction or networking permitted without license from IHS
Not for Resale

(7) Portable and Vehicle-Mounted Generators.

(a) Portable Generators. The frame of a portable generator shall not be required to be grounded and shall be permitted to serve as the grounding electrode for a system supplied by the generator under the following conditions:

(1) The generator supplies only equipment mounted on the generator, cord-and-plug-connected equipment through receptacles mounted on the generator, or both.
(2) The non–current-carrying metal parts of equipment and the equipment grounding conductor terminals of the receptacles are bonded to the generator frame.

(b) Vehicle-Mounted Generators. The frame of a vehicle shall be permitted to serve as the grounding electrode for a system supplied by a generator located on the vehicle under the following conditions:

(1) The frame of the generator is bonded to the vehicle frame.
(2) The generator supplies only equipment located on the vehicle or cord-and-plug-connected equipment through receptacles mounted on the vehicle, or both equipment located on the vehicle and cord-and-plug-connected equipment through receptacles mounted on the vehicle or on the generator.
(3) The non–current-carrying metal parts of equipment and the equipment grounding conductor terminals of the receptacles are bonded to the generator frame.
(4) The system complies with all other provisions of 410.10.

(c) Grounded Conductor Bonding. A system conductor that is required to be grounded shall be bonded to the generator frame where the generator is a component of a separately derived system.

(D) Grounding Connections.

(1) For Grounded Systems. The connection shall be made by bonding the equipment grounding conductor to the grounded service conductor and the grounding electrode conductor.

(2) For Ungrounded Systems. The connection shall be made by bonding the equipment grounding conductor to the grounding electrode conductor.

(3) Nongrounding Receptacle Replacement or Branch-Circuit Extension. The equipment grounding conductor of a grounding-type receptacle or a branch-circuit extension shall be permitted to be connected to any of the following:

(1) Any accessible point on the grounding electrode system
(2) Any accessible point on the grounding electrode conductor
(3) The equipment grounding terminal bar within the enclosure where the branch circuit for the receptacle or branch circuit originates
(4) For grounded systems, the grounded service conductor within the service equipment enclosure
(5) For ungrounded systems, the grounding terminal bar within the service equipment enclosure

(E) Enclosure, Raceway, and Service Cable Grounding.

(1) Service Raceways and Enclosures. Metal enclosures and raceways for service conductors and equipment shall be grounded.

Exception: A metal elbow that is installed in an underground installation of rigid nonmetallic conduit and is isolated from possible contact by a minimum cover of 450 mm (18 in.) to any part of the elbow shall not be required to be grounded.

(2) Service Equipment Enclosures. Metal enclosures for service equipment shall be grounded.

(3) Frames of Ranges and Clothes Dryers. Frames of electric ranges, wall-mounted ovens, counter-mounted cooking units, clothes dryers, and outlet or junction boxes that are part of the circuit for these appliances shall be grounded.

(4) Fixed Equipment. Exposed non–current-carrying metal parts of fixed equipment likely to become energized shall be grounded under any of the following conditions:

(1) Where within 2.5 m (8 ft) vertically or 1.5 m (5 ft) horizontally of ground or grounded metal objects and subject to contact by persons
(2) Where located in a wet or damp location and not isolated
(3) Where in electrical contact with metal
(4) Where in a hazardous (classified) location
(5) Where supplied by a metal-clad, metal-sheathed, metal raceway, or other wiring method that provides an equipment ground, except for short sections of metal enclosures
(6) Where equipment operates with any terminal at over 150 volts to ground

Exception No. 1: Metal frames of electrically heated appliances, exempted by special permission, in which case the frames shall be permanently and effectively insulated from ground.

Exception No. 2: Distribution apparatus, such as transformer and capacitor cases, mounted on wooden poles, at a height exceeding 2.5 m (8 ft) above ground or grade level.

Exception No. 3: Listed equipment protected by a system of double insulation, or its equivalent, shall not be required to be grounded. Where such a system is employed, the equipment shall be distinctively marked.

(5) Equipment Connected by Cord and Plug. Under any of the conditions described in (1) through (3), exposed non–current-carrying metal parts of cord-and-plug-connected equipment likely to become energized shall be grounded.

Copyright National Fire Protection Association
Provided by IHS under license with NFPA
No reproduction or networking permitted without license from IHS
Not for Resale

Exception: Listed tools, listed appliances, and listed equipment covered in (2) and (3) shall not be required to be grounded where protected by a system of double insulation or its equivalent. Double insulated equipment shall be distinctively marked.

(1) In hazardous (classified) locations *(see Article 440)*

(2) Where operated at over 150 volts to ground

Exception No. 1: Motors, where guarded, shall not required to be grounded.

Exception No. 2: Metal frames of electrically heated appliances, exempted by special permission, shall not be required to be grounded, in which case the frames shall be permanently and effectively insulated from ground.

(3) For the following in other than residential occupancies:

a. Refrigerators, freezers, and air conditioners
b. Clothes-washing, clothes-drying, dishwashing machines, information technology equipment, sump pumps, and electric aquarium equipment
c. Hand-held motor-operated tools, stationary and fixed motor-operated tools, and light industrial motor-operated tools
d. Motor-operated appliances of the following types: hedge clippers, lawn mowers, snow blowers, and wet scrubbers
e. Cord-and-plug-connected appliances used in damp or wet locations or by persons standing on the ground or on metal floors or working inside of metal tanks or boilers
f. Tools likely to be used in wet and conductive locations

Exception to (f): Tools and portable hand lamps likely to be used in wet or conductive locations shall not be required to be grounded where supplied through an isolating transformer with an ungrounded secondary of not over 50 volts.

(6) Nonelectric Equipment. The metal parts of nonelectrical equipment described in this section shall be grounded:

(1) Frames and tracks of electrically operated cranes and hoists
(2) Frames of nonelectrically driven elevator cars to which electric conductors are attached
(3) Hand-operated metal shifting ropes or cables of electric elevators

FPN: Where extensive metal in or on buildings could become energized and is subject to personal contact, adequate bonding and grounding will provide additional safety.

(F) Equipment Considered Effectively Grounded. Under the conditions in 410.10(F)(1) and 410.10(F)(2), the non–current-carrying metal parts of the equipment shall be considered effectively grounded.

(1) Equipment Secured to Grounded Metal Supports. Electric equipment secured to and in electrical contact with a metal rack or structure provided for its support shall be considered to be effectively grounded. The structural metal frame of a building shall not be used as the required equipment grounding conductor for ac equipment.

(2) Metal Car Frames. Metal car frames supported by metal hoisting cables attached to or running over metal sheaves or drums of elevator machines shall also be considered to be effectively grounded.

(G) Grounding of Systems and Circuits of 1 kV and Over (High Voltage).

(1) General. Where high-voltage systems are grounded, they shall comply with all applicable provisions of 410.10 and with 410.10(F)(2) and 410.10(F)(3), which supplement and modify the preceding sections.

(2) Grounding of Systems Supplying Portable or Mobile Equipment. Systems supplying portable or mobile high-voltage equipment, other than substations installed on a temporary basis, shall comply with 410.10(G)(2)(a) through 410.10(G)(2)(e).

(a) Portable or Mobile Equipment. Portable or mobile high-voltage equipment shall be supplied from a system having its neutral grounded through an impedance. Where a delta-connected high-voltage system is used to supply portable or mobile equipment, a system neutral shall be derived.

(b) Exposed Non–Current-Carrying Metal Parts. Exposed non–current-carrying metal parts of portable or mobile equipment shall be connected by an equipment grounding conductor to the point at which the system neutral impedance is grounded.

(c) Ground-Fault Current. The voltage developed between the portable or mobile equipment frame and ground by the flow of maximum ground-fault current shall not exceed 100 volts.

(d) Ground-Fault Detection and Relaying. Ground-fault detection and relaying shall be provided to automatically deenergize any high-voltage system component that has developed a ground fault. The continuity of the equipment grounding conductor shall be continuously monitored so as to deenergize automatically the high-voltage circuit to the portable or mobile equipment upon loss of continuity of the equipment grounding conductor.

(e) Isolation. The grounding electrode to which the portable or mobile equipment system neutral impedance is connected shall be isolated from and separated in the ground by at least 6.0 m (20 ft) from any other system or equipment grounding electrode, and there shall be no direct connection between the grounding electrodes, such as buried pipe and fence.

Copyright National Fire Protection Association
Provided by IHS under license with NFPA
No reproduction or networking permitted without license from IHS
Not for Resale

(3) Grounding of Equipment. All non–current-carrying metal parts of fixed, portable, and mobile equipment and associated fences, housings, enclosures, and supporting structures shall be grounded.

Exception: Where isolated from ground and located so as to prevent any person who can make contact with ground from contacting such metal parts when the equipment is energized.

ARTICLE 420
Wiring Methods, Components, and Equipment for General Use

420.1 Wiring Methods. The provisions of this chapter are not intended to apply to the conductors that form an integral part of equipment, such as motors, controllers, motor control centers, factory assembled control equipment, or listed utilization equipment.

(A) Bonding Other Enclosures.

(1) General. Metal raceways, cable trays, cable armor, cable sheath, enclosures, frames, fittings, and other metal non–current-carrying parts that are to serve as grounding conductors, with or without the use of supplementary equipment grounding conductors, shall be effectively bonded where necessary to ensure electrical continuity and the capacity to conduct safely any fault current likely to be imposed on them. Any nonconductive paint, enamel, or similar coating shall be removed at threads, contact points, and contact surfaces or be connected by means of fittings designed so as to make such removal unnecessary.

(2) Isolated Grounding Circuits. Where required for the reduction of electrical noise (electromagnetic interference) of the grounding circuit, an equipment enclosure supplied by a branch circuit shall be permitted to be isolated from a raceway containing circuits that supply only that equipment by one or more listed nonmetallic raceway fittings located at the point of attachment of the raceway to the equipment enclosure. The metal raceway shall comply with provisions of this standard and shall be supplemented by an internal insulated equipment grounding conductor installed to ground the equipment enclosure.

FPN: Use of an isolated equipment grounding conductor does not relieve the requirement for grounding the raceway system.

(3) Ducts for Dust, Loose Stock, or Vapor Removal. No wiring systems of any type shall be installed in ducts used to transport dust, loose stock, or flammable vapors. No wiring system of any type shall be installed in any duct, or any shaft containing only such ducts, used for vapor removal or for ventilation of commercial-type cooking equipment.

(B) Temporary Wiring. Temporary electrical power and lighting wiring methods may be of a class less than would be required for a permanent installation. Except as specifically modified in 420.1(B)(1)(a) through 420.1(B)(1)(d), all other requirements of this standard for permanent wiring shall apply to temporary wiring installations.

(1) Time Constraints.

(a) During the Period of Construction. Temporary electrical power and lighting installations shall be permitted during the period of construction, remodeling, maintenance, repair, or demolition of buildings, structures, equipment, or similar activities.

(b) 90 Days. Temporary electrical power and lighting installations shall be permitted for a period not to exceed 90 days for holiday decorative lighting and similar purposes.

(c) Emergencies and Tests. Temporary electrical power and lighting installations shall be permitted during emergencies and for tests, experiments, and developmental work.

(d) Removal. Temporary wiring shall be removed immediately upon completion of construction or purpose for which the wiring was installed.

(2) General Requirements for Temporary Wiring.

(a) Feeders. Feeders shall be protected as provided in 410.9. They shall originate in an approved distribution center. Conductors shall be permitted within cable assemblies or within multiconductor cords or cables of a type identified for hard usage or extra-hard usage. For the purpose of this section, Type NM and Type NMC cables shall be permitted to be used in any dwelling, building, or structure without any height limitation.

Exception: Single insulated conductors shall be permitted where installed for the purpose(s) specified in 420.1(B)(3)(c) where accessible only to qualified persons.

(b) Branch Circuits. All branch circuits shall originate in an approved power outlet or panelboard. Conductors shall be permitted within cable assemblies or within multiconductor cord or cable of a type identified for hard usage or extra-hard usage. All conductors shall be protected as provided in 410.9. For the purpose of this section, Type NM and NMC cables shall be permitted to be used in any dwelling, building, or structure without any height limitation.

Exception: Branch circuits installed for the purposes specified in 420.1(B)(3)(b) or 420.1(B)(3)(c) shall be permitted to be run as single insulated conductors. Where the wiring is installed in accordance with 420.1(B)(1)(c), the voltage to ground shall not exceed 150 volts, the wiring shall not be subject to physical damage, and the conductors shall be supported on insulators at intervals of not more

Copyright National Fire Protection Association
Provided by IHS under license with NFPA
No reproduction or networking permitted without license from IHS
Not for Resale

than 3.0 m (10 ft); or, for festoon lighting, the conductors shall be arranged so that excessive strain is not transmitted to the lampholders.

(c) Receptacles. All receptacles shall be of the grounding type. Unless installed in a continuous grounded metal raceway or metal-covered cable, all branch circuits shall contain a separate equipment grounding conductor, and all receptacles shall be electrically connected to the equipment grounding conductors. Receptacles on construction sites shall not be installed on branch circuits that supply temporary lighting. Receptacles shall not be connected to the same ungrounded conductor of multiwire circuits that supply temporary lighting.

(d) Disconnecting Means. Suitable disconnecting switches or plug connectors shall be installed to permit the disconnection of all ungrounded conductors of each temporary circuit. Multiwire branch circuits shall be provided with a means to disconnect simultaneously all ungrounded conductors at the power outlet or panelboard where the branch circuit originated. Approved handle ties shall be permitted.

(e) Lamp Protection. All lamps for general illumination shall be protected from accidental contact or breakage by a suitable fixture or lampholder with a guard. Brass shell, paper-lined sockets, or other metal-cased sockets shall not be used unless the shell is grounded.

(f) Splices. On construction sites, a box shall not be required for splices or junction connections where the circuit conductors are multiconductor cord or cable assemblies, provided that the equipment grounding continuity is maintained with or without the box. A box, conduit body, or terminal fitting having a separately bushed hole for each conductor shall be used wherever a change is made to a conduit or tubing system or a metal-sheathed cable system.

(g) Protection from Accidental Damage. Flexible cords and cables shall be protected from accidental damage. Sharp corners and projections shall be avoided. Where passing through doorways or other pinch points, protection shall be provided to avoid damage.

(h) Termination(s) at Devices. Flexible cords and cables entering enclosures containing devices requiring termination shall be secured to the box with fittings designed for the purpose.

(i) Support. Cable assemblies and flexible cords and cables shall be supported in place at intervals that ensure that they will be protected from physical damage. Support shall be in the form of staples, cable ties, straps, or similar type fittings installed so as not to cause damage. Vegetation shall not be used for support of overhead spans of branch circuits or feeders.

(C) Cable Trays.

(1) Uses Permitted. Cable tray shall be permitted to be used as a support system for services, feeders, branch circuits, communications circuits, control circuits, and signaling circuits. Cable tray installations shall not be limited to industrial establishments. Where exposed to direct rays of the sun, insulated conductors and jacketed cables shall be identified as being sunlight resistant. Cable trays and their associated fittings shall be identified for the intended use.

(2) Wiring Methods. The following wiring methods shall be permitted to be installed in cable tray systems: armored cable; communication raceways; electrical metallic tubing; electrical nonmetallic tubing; fire alarm cables; flexible metal conduit; flexible metallic tubing; instrumentation tray cable; intermediate metal conduit; liquidtight flexible metal conduit and liquidtight flexible nonmetallic conduit; metal-clad cable; mineral-insulated, metal-sheathed cable; multiconductor service-entrance cable; multiconductor underground feeder and branch-circuit cable; multipurpose and communications cables; nonmetallic-sheathed cable; power and control tray cable; power-limited tray cable; optical fiber cables; optical fiber raceways; other factory-assembled, multiconductor control, signal, or power cables that are specifically approved for installation in cable trays; rigid metal conduit; and rigid nonmetallic conduit.

(3) In Industrial Establishments. The wiring methods in 420.1(C)(2) shall be permitted to be used in any industrial establishment under the conditions described in their respective articles. In industrial establishments only, where conditions of maintenance and supervision ensure that only qualified persons service the installed cable tray system, any of the cables in 420.1(C)(2)(a) and 420.1(C)(2)(b) shall be permitted to be installed in ladder, ventilated trough, solid bottom, or ventilated channel cable trays.

(a) Single Conductors. Single conductor cables shall be permitted to be installed in accordance with the following:

(1) Single conductor cable shall be 1/0 AWG or larger and shall be of a type listed and marked on the surface for use in cable trays. Where 1/0 AWG through 4/0 AWG single conductor cables are installed in ladder cable tray, the maximum allowable run spacing for the ladder cable tray shall be 230 mm (9 in.).
(2) Welding cables shall be installed in dedicated cable trays, as permitted.
(3) Single conductors used as equipment grounding conductors shall be insulated, covered, or bare, and they shall be 4 AWG or larger.

(b) Medium Voltage. Single- and multiconductor medium voltage cables shall be Type MV cable. Single conductors shall be installed in accordance with 420.1(C)(1).

Copyright National Fire Protection Association
Provided by IHS under license with NFPA
No reproduction or networking permitted without license from IHS
Not for Resale

(c) Equipment Grounding Conductors. Metallic cable trays shall be permitted to be used as equipment grounding conductors where continuous maintenance and supervision ensure that qualified persons service the installed cable tray system.

(d) Hazardous (Classified) Locations. Hazardous (classified) locations as permitted.

(e) Nonmetallic Cable Tray. Nonmetallic cable tray shall be permitted in corrosive areas and in areas requiring voltage isolation.

(4) Uses Not Permitted. Cable tray systems shall not be used in hoistways or where subject to severe physical damage. Cable tray systems shall not be used in environmental airspaces, except as permitted in 420.1(A)(2) to support wiring methods recognized for use in such spaces.

(D) Open Wiring on Insulators.

(1) Uses Permitted. Open wiring on insulators shall be permitted on systems of 600 volts, nominal, or less, as follows:

(1) Indoors or outdoors
(2) In wet or dry locations
(3) Where subject to corrosive vapors
(4) For services

(2) Securing and Supporting Conductor Sizes Smaller Than 8 AWG. Conductors smaller than 8 AWG shall be rigidly supported on noncombustible, nonabsorbent insulating materials and shall not contact any other objects. Supports shall be installed as follows:

(1) Within 150 mm (6 in.) from a tap or splice
(2) Within 300 mm (12 in.) of a dead-end connection to a lampholder or receptacle
(3) At intervals not exceeding 1.4 m (4½ ft) and at closer intervals sufficient to provide adequate support where likely to be disturbed

(3) Exposed Work.

(a) Dry Locations. In dry locations, where not exposed to severe physical damage, conductors shall be permitted to be separately enclosed in flexible nonmetallic tubing. The tubing shall be in continuous lengths not exceeding 4.5 m (15 ft) and secured to the surface by straps at intervals not exceeding 1.4 m (4½ ft).

(b) Entering Spaces Subject to Dampness, Wetness, or Corrosive Vapors. Conductors entering or leaving locations subject to dampness, wetness, or corrosive vapors shall have drip loops formed on them and shall then pass upward and inward from the outside of the buildings, or from the damp, wet, or corrosive location, through non-combustible, nonabsorbent insulating tubes.

(c) Exposed to Physical Damage. Conductors within 2.1 m (7 ft) from the floor shall be considered exposed to physical damage. Where open conductors cross ceiling joists and wall studs and are exposed to physical damage, they shall be protected by one of the following methods:

(1) Guard strips not less than 25 mm (1 in.) nominal in thickness and at least as high as the insulating supports, placed on each side of and close to the wiring.
(2) A substantial running board at least 13 mm (½ in.) thick in back of the conductors with side protections. Running boards shall extend at least 25 mm (1 in.) outside the conductors, but not more than 50 mm (2 in.), and the protecting sides shall be at least 50 mm (2 in.) high and at least 25 mm (1 in.) nominal in thickness.
(3) Boxing made in accordance with items (1) and (2) and furnished with a cover kept at least 25 mm (1 in.) away from the conductors within. Where protecting vertical conductors on side walls, the boxing shall be closed at the top and the holes through which the conductors pass shall be bushed.
(4) Rigid metal conduit, intermediate metal conduit, rigid nonmetallic conduit, or electrical metallic tubing, or by metal piping, in which case the conductors shall be encased in continuous lengths of approved flexible tubing.

(4) Through or Parallel to Framing Members. Open conductors shall be separated from contact with walls, floors, wood cross members, or partitions through which they pass by tubes or bushings of noncombustible, nonabsorbent insulating material. Where the bushing is shorter than the hole, a waterproof sleeve of noninductive material shall be inserted in the hole and an insulating bushing slipped into the sleeve at each end in such a manner as to keep the conductors absolutely out of contact with the sleeve. Each conductor shall be carried through a separate tube or sleeve.

420.2 Cabinets, Cutout Boxes, and Meter Socket Enclosures.

(A) Cabinets, Cutout Boxes, and Meter Socket Enclosures. Conductors entering enclosures within the scope of this standard shall be protected from abrasion and shall comply with 420.2(A)(1) through 420.2(A)(3).

(1) Openings to Be Closed. Opening through which conductors enter shall be adequately closed.

(2) Metal Cabinets, Cutout Boxes, and Meter Socket Enclosures. Where metal enclosures within the scope of this standard are installed with open wiring or concealed knob-and-tube wiring, conductors shall enter through insulating bushings or, in dry locations, through flexible tubing extending from the last insulating support and firmly secured to the enclosure.

Copyright National Fire Protection Association
Provided by IHS under license with NFPA
No reproduction or networking permitted without license from IHS
Not for Resale

(3) Cables. Where cable is used, each cable shall be secured to the cabinet, cutout box, or meter socket enclosure.

Exception: Cables with entirely nonmetallic sheaths shall be permitted to enter the top of a surface-mounted enclosure through one or more nonflexible raceways not less than 450 mm (18 in.) or more than 3.0 m (10 ft) in length, provided all the following conditions are met:

(a) Each cable is fastened within 300 mm (12 in.), measured along the sheath, of the outer end of the raceway.

(b) The raceway extends directly above the enclosure and does not penetrate a structural ceiling.

(c) A fitting is provided on each end of the raceway to protect the cable(s) from abrasion and the fittings remain accessible after installation.

(d) The raceway is sealed or plugged at the outer end using approved means so as to prevent access to the enclosure through the raceway.

(e) The cable sheath is continuous through the raceway and extends into the enclosure beyond the fitting not less than 6 mm (¼ in.).

(f) The raceway is fastened at its outer end and at other points in accordance with applicable section.

(g) Where installed as conduit or tubing, the allowable cable fill does not exceed that permitted for complete conduit or tubing systems.

(B) Covers and Canopies. In completed installations, each box shall have a cover, faceplate, or fixture canopy.

(1) Nonmetallic or Metal Covers and Plates. Nonmetallic or metal covers and plates shall be permitted. Where metal covers and plates are used, they shall comply with grounding requirements.

(2) Exposed Combustible Wall or Ceiling Finish. Where a luminaire (fixture) canopy or pan is used, any combustible wall or ceiling finish exposed between the edge of the canopy or pan and the outlet box shall be covered with noncombustible material.

(3) Flexible Cord Pendants. Covers of outlet boxes and conduit bodies having holes through which flexible cord pendants pass shall be provided with bushings designed for the purpose or shall have smooth, well-rounded surfaces on which the cords may bear. So-called hard rubber or composition bushings shall not be used.

(C) Pull and Junction Boxes for Use on Systems Over 600 Volts, Nominal. In addition to other requirements in this standard for pull and junction boxes, (1) and (2) shall apply:

(1) Boxes shall provide a complete enclosure for the contained conductors or cables.

(2) Boxes shall be closed by suitable covers securely fastened in place. Underground box covers that weigh over 45 kg (100 lb) shall be considered as meeting this requirement. Covers for boxes shall be permanently marked "DANGER — HIGH VOLTAGE — KEEP OUT." The marking shall be on the outside of the box cover and shall be readily visible. Letters shall be block type and at least 13 mm (½ in.) in height.

FPN: For further information on hazard signs and labels, see ANSI Z535-4, *Product Signs and Safety Labels*.

420.3 Position and Connection of Switches.

(A) Single-Throw Knife Switches. Single-throw knife switches shall be placed so that gravity will not tend to close them. Single-throw knife switches approved for use in the inverted position shall be provided with a locking device that ensures that the blades remain in the open position when so set.

(B) Double-Throw Knife Switches. Double-throw knife switches shall be permitted to be mounted so that the throw is either vertical or horizontal. Where the throw is vertical, a locking device shall be provided to hold the blades in the open position when so set.

(C) Connection of Switches. Single-throw knife switches and switches with butt contacts shall be connected so that their blades are de-energized when the switch is in the open position. Bolted pressure contact switches shall have barriers that prevent inadvertent contact with energized blades. Single-throw knife switches, bolted pressure contact switches, molded-case switches, switches with butt contacts, and circuit breakers used as switches shall be connected so that the terminals supplying the load are de-energized when the switch is in the open position.

Exception: The blades and terminals supplying the load of a switch shall be permitted to be energized when the switch is in the open position where the switch is connected to circuits or equipment inherently capable of providing a backfeed source of power. For such installations, a permanent sign shall be installed on the switch enclosure or immediately adjacent to open switches with the following words or equivalent:

WARNING
LOAD SIDE TERMINALS MAY BE ENERGIZED
BY BACKFEED

(D) Provisions for Snap Switch Faceplates.

(1) Faceplates. Faceplates provided for snap switches mounted in boxes and other enclosures shall be installed so as to completely cover the opening and, where the switch is flush mounted, seat against the finished surface.

Copyright National Fire Protection Association
Provided by IHS under license with NFPA
No reproduction or networking permitted without license from IHS
Not for Resale

(2) Grounding. Snap switches, including dimmer and similar control switches, shall be effectively grounded and shall provide a means to ground metal faceplates, whether or not a metal faceplate is installed. Snap switches shall be considered effectively grounded if either of the following conditions is met:

(1) The switch is mounted with metal screws to a metal box or to a nonmetallic box with integral means for grounding devices.
(2) An equipment grounding conductor or equipment bonding jumper is connected to an equipment grounding termination of the snap switch.

Exception to (2): Where no grounding means exists within the snap-switch enclosure or where the wiring method does not include or provide an equipment ground, a snap switch without a grounding connection shall be permitted for replacement purposes only. A snap switch wired under the provisions of this exception and located within reach of earth, grade conducting floors, or other conducting surfaces shall be provided with a faceplate of nonconducting, noncombustible material.

420.4 Switchboards and Panelboards. Switchboards that have any exposed live parts operating at 50 volts or more shall be located in permanently dry locations and then only where under competent supervision and accessible only to qualified persons. Switchboards shall be located so that the probability of damage from equipment or processes is reduced to a minimum. Panelboards shall be mounted in cabinets, cutout boxes, or enclosures designed for the purpose and shall be dead front.

Exception: Panelboards other than of the dead-front, externally operable type shall be permitted where accessible only to qualified persons.

420.5 Enclosures for Damp or Wet Locations.

(A) Damp or Wet Locations. In damp or wet locations, surface-type enclosures within the scope of this standard shall be placed or equipped so as to prevent moisture or water from entering and accumulating within the cabinet or cutout box, and shall be mounted so there is at least a 6-mm (¼-in.) airspace between the enclosure and the wall or other supporting surface. Enclosures installed in wet locations shall be weatherproof.

Exception: Nonmetallic enclosures shall be permitted to be installed without the airspace on a concrete, masonry, tile, or similar surface.

(B) Switchboards and Panelboards in Damp or Wet Locations. Switchboards or panelboards in a wet location or outside of a building shall be enclosed in a weatherproof enclosure or cabinet that shall comply with 420.5(A).

420.6 Conductor Identification.

(A) Grounded Conductors. Insulated or covered grounded conductors shall be identified in accordance with this standard.

(B) Equipment Grounding Conductors. Equipment grounding conductors shall be identified in accordance with this standard.

(C) Ungrounded Conductors. Conductors that are intended for use as ungrounded conductors, whether used as a single conductor or in multiconductor cables, shall be finished to be clearly distinguishable from grounded and grounding conductors. Distinguishing markings shall not conflict in any manner with the surface markings.

420.7 Flexible Cords and Cables.

(A) Suitability. Flexible cords and cables and their associated fittings shall be suitable for the conditions of use and location.

(B) Uses Permitted.

(1) Uses. Flexible cords and cables shall be used only for the following:

(1) Pendants
(2) Wiring on luminaires (fixtures)
(3) Connection of portable lamps, portable and mobile signs, or appliances
(4) Elevator cables
(5) Wiring on cranes and hoists
(6) Connection of utilization equipment to facilitate frequent interchange
(7) Prevention of the transmission of noise or vibration
(8) Appliances where the fastening means and mechanical connections are specifically designed to permit ready removal for maintenance and repair, and the appliance is intended or identified for flexible cord connection
(9) Data processing cables
(10) Connection of moving parts
(11) Temporary wiring

(2) Attachment Plugs. Where used as permitted in 420.7(B)(1)(3), (9), and (11), each flexible cord shall be equipped with an attachment plug and shall be energized from a receptacle outlet.

(C) Uses Not Permitted. Unless specifically permitted in 420.7(B), flexible cords and cables shall not be used for the following:

(1) As a substitute for the fixed wiring of a structure
(2) Where run through holes in walls, structural ceilings, suspended ceilings, dropped ceilings, or floors

Copyright National Fire Protection Association
Provided by IHS under license with NFPA
No reproduction or networking permitted without license from IHS
Not for Resale

(3) Where run through doorways, windows, or similar openings
(4) Where attached to building surfaces

Exception to (4): Flexible cord and cable shall be permitted to be attached to building surfaces.

(5) Where concealed by walls, floors, or ceilings or where located above suspended or dropped ceilings

(6) Where installed in raceways, except as otherwise permitted in this standard

(D) In Show Windows and Show Cases. Flexible cords used in show windows and show cases shall be Type S, SE, SEO, SEOO, SJ, SJE, SJEO, SJEOO, SJO, SJOO, SJT, SJTO, SJTOO, SO, SOO, ST, STO, STOO, SEW, SEOW, SEOOW, SJEW, SJEOW, SJEOOW, SJOW, SJOOW, SJTW, SJTOW, SJTOOW, SOW, SOOW, STW, STOW, or STOOW.

Exception No. 1: For the wiring of chain-supported luminaires (lighting fixtures).

Exception No. 2: As supply cords for portable lamps and other merchandise being displayed or exhibited.

(E) Markings, Splices, and Pull at Joints and Terminals.

(1) Standard Markings. Flexible cords and cables shall be marked by means of a printed tag attached to the coil reel or carton. The tag shall contain the required information. Types S, SC, SCE, SCT, SE, SEO, SEOO, SJ, SJE, SJEO, SJEOO, SJO, SJT, SJTO, SJTOO, SO, SOO, ST, STO, STOO, SEW, SEOW, SEOOW, SJEW, SJEOW, SJEOOW, SJOW, SJTW, SJTOW, SJTOOW, SOW, SOOW, STW, STWO, and STOOW flexible cords and G, G-GC, PPE, and W flexible cables shall be durably marked on the surface at intervals not exceeding 610 mm (24 in.) with the type designation, size, and number of conductors.

(2) Splices. Flexible cord shall be used only in continuous lengths without splice or tap where initially installed in applications permitted by this section. The repair of hard-service cord and junior hard-service cord 14 AWG and larger shall be permitted if conductors are spliced in accordance with this standard and the completed splice retains the insulation, outer sheath properties, and usage characteristics of the cord being spliced.

(3) Pull at Joints and Terminals. Flexible cords and cables shall be connected to devices and to fittings so that tension is not transmitted to joints or terminals.

Exception: Listed portable single-pole devices that are intended to accommodate such tension at their terminals shall be permitted to be used with single conductor flexible cable.

420.8 Portable Cables Over 600 Volts, Nominal.

(A) Construction.

(1) Conductors. The conductors shall be 8 AWG copper or larger and shall employ flexible stranding.

Exception: The size of the insulated ground-check conductor of Type G-GC cables shall be not smaller than 10 AWG.

(2) Shields. Cables operated at over 2000 volts shall be shielded. Shielding shall be for the purpose of confining the voltage stresses to the insulation.

(3) Equipment Grounding Conductor(s). An equipment grounding conductor(s) shall be provided. The total area shall not be less than that of the size of the equipment grounding conductor required in this standard.

(B) Shielding. All shields shall be grounded.

(C) Grounding. Grounding conductors shall be connected in accordance with this standard.

(D) Minimum Bending Radii. The minimum bending radii for portable cables during installation and handling in service shall be adequate to prevent damage to the cable.

(E) Fittings. Connectors used to connect lengths of cable in a run shall be of a type that lock firmly together. Provisions shall be made to prevent opening or closing these connectors while energized. Suitable means shall be used to eliminate tension at connectors and terminations.

(F) Splices and Terminations. Portable cables shall not contain splices unless the splices are of the permanent molded, vulcanized types in accordance with this standard. Terminations on portable cables rated over 600 volts, nominal, shall be accessible only to authorized and qualified personnel.

420.9 Fixture Wires.

(A) General. Fixture wires shall be a type approved for the voltage, temperature, and location of use. One conductor of fixture wires that is intended to be used as a grounded conductor shall be identified by means of stripes or by a colored braid, tracer in braid, colored insulation, colored separator, or tinned conductors.

(B) Uses Permitted. Fixture wires shall be permitted (1) for installation in luminaires (lighting fixtures) and in similar equipment where enclosed or protected and not subject to bending or twisting in use, or (2) for connecting luminaires (lighting fixtures) to the branch-circuit conductors supplying the luminaires (fixtures).

(C) Uses Not Permitted. Fixture wires shall not be used as branch-circuit conductors.

Copyright National Fire Protection Association
Provided by IHS under license with NFPA
No reproduction or networking permitted without license from IHS
Not for Resale

420.10 Equipment for General Use.

(A) Live Parts. Luminaires (fixtures), lampholders, and lamps shall have no live parts operating at 50 volts or more normally exposed to contact. Exposed accessible terminals in lampholders and switches shall not be installed in metal luminaire (fixture) canopies or in open bases or portable table or floor lamps.

Exception: Cleat-type lampholders located at least 2.5 m (8 ft) above the floor shall be permitted to have exposed terminals.

(1) Portable Handlamps. Portable handlamps shall comply with the following:

(1) Metal shell, paper-lined lampholders shall not be used.
(2) Handlamps shall be equipped with a handle of molded composition or other insulating material.
(3) Handlamps shall be equipped with a substantial guard attached to the lampholder or handle.
(4) Metallic guards shall be grounded by means of an equipment grounding conductor run with circuit conductors within the power-supply cord.
(5) Portable handlamps shall not be required to be grounded where supplied through an isolating transformer with an ungrounded secondary not over 50 volts.

(B) Installation of Lampholders.

(1) Screw-Shell Type. Lampholders of the screw-shell type shall be installed for use as lampholders only. Where supplied by a circuit having a grounded conductor, the grounded conductor shall be connected to the screw shell. Lampholders installed in wet or damp locations shall be of the weatherproof type.

(2) Double-Pole Switched Lampholders. Where supplied by the ungrounded conductors of a circuit, the switching device of lampholders of the switched type shall simultaneously disconnect both conductors of the circuit.

(3) Lampholders in Wet and Damp Locations. Lampholders installed in wet or damp locations shall be of the weatherproof type.

(C) Receptacles, Cord Connectors, and Attachment Plugs (Caps).

(1) Attachment Plugs. All attachment plugs and cord connectors shall be listed for the purpose and marked with the manufacturer's name or identification and voltage and ampere ratings.

(a) Construction. Attachment plugs and cord connectors shall be constructed so that there are no exposed current-carrying parts except the prongs, blades, or pins. The cover for wire terminations shall be a part that is essential for the operation of an attachment plug or connector (dead-front construction).

(b) Installation. Attachment plugs shall be installed so that their prongs, blades, or pins are not energized unless inserted into an energized receptacle. No receptacle shall be installed so as to require an energized attachment plug as its source of supply.

(c) Attachment Plug Ejector Mechanisms. Attachment plug ejector mechanisms shall not adversely affect engagement of the blades of the attachment plug with the contacts of the receptacle.

(2) Noninterchangeability. Receptacles, cord connectors, and attachment plugs shall be constructed so that receptacle or cord connectors do not accept an attachment plug with a different voltage or current rating from that for which the device is intended. However, a 20-ampere T-slot receptacle or cord connector shall be permitted to accept a 15-ampere attachment plug of the same voltage rating. Non–grounding-type receptacles and connectors shall not accept grounding-type attachment plugs.

(3) Receptacles in Damp or Wet Locations.

(a) Receptacles installed outdoors in a location protected from the weather or in other damp locations shall have an enclosure for the receptacle that is weatherproof when the receptacle is covered (attachment plug cap not inserted and receptacle covers closed).

(b) Installations suitable for wet locations shall also be considered suitable for damp locations.

(c) Receptacles shall be considered to be in a location protected from the weather where located under roofed open porches, canopies, marquees, and the like, and will not be subjected to a beating rain or water runoff.

(4) Receptacles in Wet Locations.

(a) 15- and 20-Ampere Outdoor Receptacles. All 15- and 20-ampere and 125- and 250-volt receptacles installed outdoors in a wet location shall have an enclosure that is weatherproof whether or not the attachment plug cap is inserted.

(b) Other Receptacles. Receptacles installed in a wet location shall comply with either of the following:

(1) A receptacle installed in a wet location where the product intended to be plugged into it is not attended while in use (e.g., sprinkler system controller, landscape lighting, holiday lights, and so forth) shall have an enclosure that is weatherproof with the attachment plug cap inserted or removed.
(2) A receptacle installed in a wet location where the product intended to be plugged into it will be attended while in use (e.g., portable tools, and so forth) shall have an enclosure that is weatherproof when the attachment plug is removed.

Copyright National Fire Protection Association
Provided by IHS under license with NFPA
No reproduction or networking permitted without license from IHS
Not for Resale

(D) Appliances.

(1) Live Parts. Appliances shall have no live parts operating at 50 volts or more normally exposed to contact other than those parts functioning as open-resistance heating elements, such as the heating element of a toaster, which are necessarily exposed.

(2) Disconnecting Means. A means shall be provided to disconnect each appliance from all ungrounded conductors. If an appliance is supplied by more than one source, the disconnecting means shall be grouped and identified.

(3) Nameplate.

(a) Nameplate Marking. Each electric appliance shall be provided with a nameplate giving the identifying name and the rating in volts and amperes or in volts and watts. If the appliance is to be used on a specific frequency or frequencies, it shall be so marked. Where motor overload protection external to the appliance is required, the appliance shall be so marked.

(b) To Be Visible. Marking shall be located so as to be visible or easily accessible after installation.

(E) Motors.

(1) In Sight From (Within Sight From, Within Sight). Where one piece of equipment shall be "in sight from," "within sight from," or "within sight," and so forth, of another equipment, the specified equipment is to be visible and not more than 15 m (50 ft) distant from the other.

(2) Disconnecting Means Location.

(a) Controller. An individual disconnecting means shall be provided for each controller and shall disconnect the controller. The disconnecting means shall be located in sight from the controller location.

Exception No. 1: For motor circuits over 600 volts, nominal, a controller disconnecting means capable of being locked in the open position shall be permitted to be out of sight of the controller, provided the controller is marked with a warning label giving the location of the disconnecting means.

Exception No. 2: A single disconnecting means shall be permitted for a group of coordinated controllers that drive several parts of a single machine or piece of apparatus. The disconnecting means shall be located in sight from the controllers, and both the disconnecting means and the controllers shall be located in sight from the machine or apparatus.

(b) Motor. A separate disconnecting means shall be located in sight from the motor location and the driven machinery location. The disconnecting means required in accordance with 420.10(E)(1) shall be permitted to serve as the disconnecting means for the motor if it is located in sight from the motor location and the driven machinery location.

Exception: The disconnecting means shall not be required to be in sight from the motor and the driven machinery location under either condition (a) or (b), provided the disconnecting means required in accordance with 420.10(E)(2) is individually capable of being locked in the open position. The provision for locking or adding a lock to the disconnecting means shall be permanently installed on or at the switch or circuit breaker used as the disconnecting means.

(a) Where such a location of the disconnecting means is impracticable or introduces additional or increased hazard to persons or property

(b) In industrial installations, with written safety procedures, where conditions of maintenance and supervision ensure that only qualified persons service the equipment

FPN: Some examples of increased or additional hazards include, but are not limited to, motors rated in excess of 100 hp, multimotor equipment, submersible motors, motors associated with variable frequency drives, and motors located in hazardous (classified) locations.

(c) To Be Indicating. The disconnecting means shall plainly indicate whether it is in the open (off) or closed (on) position.

(d) Readily Accessible. At least one of the disconnecting means shall be readily accessible.

(e) Motors Served by Single Disconnecting Means. Each motor shall be provided with an individual disconnecting means.

Exception: A single disconnecting means shall be permitted to serve a group of motors under any one of the following conditions:

(a) Where a number of motors drive several parts of a single machine or piece of apparatus, such as metal and woodworking machines, cranes, and hoists

(b) Where a group of motors is under the protection of one set of branch-circuit protective devices

(c) Where a group of motors is in a single room within sight from the location of the disconnecting means

(f) Motor and Branch-Circuit Overload Protection. Overload devices are intended to protect motors, motor-control apparatus, and motor branch-circuit conductors against excessive heating due to motor overloads and failure to start. Overload in electrical apparatus is an operating overcurrent that, when it persists for a sufficient length of time, would cause damage or dangerous overheating of the apparatus. It does include short circuits or ground faults. These provisions shall not be interpreted as requiring overload protection where it might introduce additional or increased hazards, as in the case of fire pumps.

(g) Protection of Live Parts — All Voltages. Exposed live parts of motors and controllers operating at 50 volts or more shall be guarded against accidental contact by enclosures or by location as follows:

Copyright National Fire Protection Association
Provided by IHS under license with NFPA
No reproduction or networking permitted without license from IHS
Not for Resale

(1) By installation in a room or enclosure that is accessible only to qualified persons
(2) By installation on a suitable balcony, gallery, or platform elevated and arranged so as to exclude unqualified persons
(3) By elevation 2.5 m (8 ft) or more above the floor

Exception to (g): Live parts of motors operating at more than 50 volts between terminals shall not require additional guarding for stationary motors that have commutators, collectors, and brush rigging located inside of motor-end brackets and not conductively connected to supply circuits operating at more than 150 volts to ground.

(h) Guards for Attendants. Where live parts of motors or controllers operating at over 150 volts to ground are guarded against accidental contact only by location, and where adjustment or other attendance might be necessary during the operation of the apparatus, suitable insulating mats or platforms shall be provided so that the attendant cannot readily touch live parts unless standing on the mats or platforms.

(F) Transformers.

(1) General. Sections 420.10(F)(2) through 420.10(F)(8) cover the installation of all transformers. The following transformers are not covered by 420.10(F):

(1) Current transformers
(2) Dry-type transformers that constitute a component part of other apparatus and comply with requirements for such apparatus
(3) Transformers that are an integral part of an X-ray, high-frequency, or electrostatic-coating apparatus
(4) Transformers used with Class 2 and Class 3 circuits
(5) Transformers for sign and outline lighting
(6) Transformers for electric-discharge lighting
(7) Transformers used for power-limited fire alarm circuits
(8) Transformers used for research, development, or testing, where effective arrangements are provided to safeguard persons from contacting energized parts

(2) Voltage Warning. The operating voltage of exposed live parts operating at 50 volts or more of transformer installations shall be indicated by signs or visible markings on the equipment or structures.

(3) Dry-Type Transformers Installed Indoors. Dry-type transformers installed indoors and rated over 35 kV shall be installed in a vault.

(4) Oil-Insulated Transformers Installed Indoors. Oil-insulated transformers installed indoors shall be installed in a vault.

(5) Oil-Insulated Transformers Installed Outdoors. Combustible material, combustible buildings, and parts of buildings, fire escapes, and door and window openings shall be safeguarded from fires originating in oil-insulated transformers installed on roofs, attached to or adjacent to a building or combustible material.

(6) Doorways. Vault doorways shall be protected in accordance with 420.10(F)(6)(a), 420.10(F)(6)(b), and 420.10(F)(6)(c):

(a) Type of Door. Each doorway leading into a vault from the building interior shall be provided with a tight-fitting door that has a minimum fire rating of 3 hours. The authority having jurisdiction shall be permitted to require such a door for an exterior wall opening where conditions warrant.

Exception: Where transformers are protected with automatic sprinkler, water spray, carbon dioxide, or halon, construction of 1-hour rating shall be permitted.

(b) Sills. A door sill or curb that is of sufficient height to confine the oil from the largest transformer within the vault shall be provided, and in no case shall the height be less than 100 mm (4 in.).

(c) Locks. Doors shall be equipped with locks, and doors shall be kept locked, access being allowed only to qualified persons. Personnel doors shall swing out and be equipped with panic bars, pressure plates, or other devices that are normally latched but open under simple pressure.

(7) Water Pipes and Accessories. Any pipe or duct system foreign to the electrical installation shall not enter or pass through a transformer vault. Piping or other facilities provided for vault fire protection, or for transformer cooling, shall not be considered foreign to the electrical installation.

(8) Storage in Vaults. Materials shall not be stored in transformer vaults.

(G) Capacitors.

(1) Switching: Load Current. Group-operated switches shall be used for capacitor switching and shall be capable of the following:

(1) Carrying continuously not less than 135 percent of the rated current of the capacitor installation
(2) Interrupting the maximum continuous load current of each capacitor, capacitor bank, or capacitor installation that will be switched as a unit
(3) Withstanding the maximum inrush current, including contributions from adjacent capacitor installations
(4) Carrying currents due to faults on capacitor side of switch

(2) Isolation.

(a) General. A means shall be installed to isolate from all sources of voltage each capacitor, capacitor bank, or capacitor installation that will be removed from service as a unit. The isolating means shall provide a visible gap in the electrical circuit adequate for the operating voltage.

Copyright National Fire Protection Association
Provided by IHS under license with NFPA
No reproduction or networking permitted without license from IHS
Not for Resale

(b) Isolating or Disconnecting Switches with No Interrupting Rating. Isolating or disconnecting switches (with no interrupting rating) shall be interlocked with the load-interrupting device or shall be provided with prominently displayed caution signs to prevent switching load current.

(3) Additional Requirements for Series Capacitors. The proper switching sequence shall be ensured by use of one of the following:

(1) Mechanically sequenced isolating and bypass switches
(2) Interlocks
(3) Switching procedure prominently displayed at the switching location

(H) Storage Batteries. Provisions shall be made for sufficient diffusion and ventilation of the gases from the battery to prevent the accumulation of an explosive mixture.

ARTICLE 430
Specific Purpose Equipment and Installations

430.1 Electric Signs and Outline Lighting.

(A) Disconnects. Each sign and outline lighting system, or feeder circuit or branch circuit supplying a sign or outline lighting system, shall be controlled by an externally operable switch or circuit breaker that opens all ungrounded conductors. The disconnecting means for signs and outline lighting systems shall be accessible and within sight from its equipment.

Exception No. 1: A disconnecting means shall not be required for an exit directional sign located within a building.

Exception No. 2: A disconnecting means shall not be required for cord-connected signs with an attachment plug.

(B) Location.

(1) Within Sight of the Sign. The disconnecting means shall be within sight of the sign or outline lighting system that it controls. Where the disconnecting means is out of the line of sight from any section that may be energized, the disconnecting means shall be capable of being locked in the open position.

(2) Within Sight of the Controller. The following shall apply for signs or outline lighting systems operated by electronic or electromechanical controllers located external to the sign or outline lighting system:

(1) The disconnecting means shall be permitted to be located within sight of the controller or in the same enclosure with the controller.
(2) The disconnecting means shall disconnect the sign or outline lighting system and the controller from all ungrounded supply conductors.
(3) The disconnecting means shall be designed so that no pole can be operated independently and shall be capable of being locked in the open position.

430.2 Cranes and Hoists.

(A) Disconnecting Means.

(1) Runway Conductor Disconnecting Means. A disconnecting means that has a continuous ampere rating shall be provided between the runway contact conductors and the power supply. Such disconnecting means shall consist of a motor-circuit switch, circuit breaker, or molded case switch. The disconnecting means shall be as follows:

(1) Readily accessible and operable from the ground or floor level
(2) Capable of being locked in the open position
(3) Open all ungrounded conductors simultaneously
(4) Placed within view of the runway contact conductors

(2) Disconnecting Means for Cranes and Monorail Hoists.

(a) A motor circuit switch, molded-case switch, or circuit breaker shall be provided in the leads from the runway contact conductors or other power supply on all cranes and monorail hoists. The disconnecting means shall be capable of being locked in the open position.

(b) Where a monorail hoist or hand-propelled crane bridge installation meets all of the following, the disconnecting means shall be permitted to be omitted:

(1) The unit is controlled from the ground or floor level.
(2) The unit is within view of the power supply disconnecting means.
(3) No fixed work platform has been provided for servicing the unit.

(c) Where the disconnecting means is not readily accessible from the crane or monorail hoist operating station, means shall be provided at the operating station to open the power circuit to all motors of the crane or monorail hoist.

(B) Limit Switch. A limit switch or other device shall be provided to prevent the load block from passing the safe upper limit of travel of all hoisting mechanisms.

(C) Clearance. The dimension of the working space in the direction of access to live parts operating at 50 volts or more that are likely to require examination, adjustment, servicing, or maintenance while energized shall be a minimum of 750 mm (2½ ft). Where controls are enclosed in cabinets, the door(s) shall either open at least 90 degrees or be removable.

Copyright National Fire Protection Association
Provided by IHS under license with NFPA
No reproduction or networking permitted without license from IHS
Not for Resale

430.3 Elevators, Dumbwaiters, Escalators, Moving Walks, Wheelchair Lifts, and Stairway Chair Lifts.

(A) Disconnecting Means. A single means for disconnecting all ungrounded main power supply conductors for each unit shall be provided and be designed so that no pole can be operated independently. Where multiple driving machines are connected to a single elevator, escalator, moving walk, or pumping unit, there shall be one disconnecting means to disconnect the motor(s) and control valve operating magnets. The disconnecting means for the main power supply conductors shall not disconnect a branch circuit supplying such items as the following:

(1) Car lighting, receptacle(s), ventilation, heating, and air conditioning.
(2) Machine room or control room/machinery space for control spacing lighting and receptacle(s).
(3) Hoistway pit lighting and receptacle(s).

(1) Type. The disconnecting means shall be an enclosed externally operable fused motor circuit switch or circuit breaker capable of being locked in the open position. The disconnecting means shall be a listed device.

(2) Operation. No provision shall be made to open or close this disconnecting means from any other part of the premises. If sprinklers are installed in hoistways, machine rooms, control rooms, machinery spaces, or control spaces, the disconnecting means shall be permitted to automatically open the power supply to the affected elevator(s) prior to the application of water. No provision shall be made to automatically close this disconnecting means. Power shall only be restored by manual means.

(3) Location. The disconnecting means shall be located where it is readily accessible to qualified persons.

(a) On Elevators Without Generator Field Control. On elevators without generator field control, the disconnecting means shall be located within sight of the motor controller. Driving machines or motion and operation controllers not within sight of the disconnecting means shall be provided with a manually operated switch installed in the control circuit to prevent starting. The manually operated switch(es) shall be installed adjacent to this equipment. Where the driving machine of an electric elevator or the hydraulic machine of a hydraulic elevator is located in a remote machinery room or machinery space, a single means for disconnecting all ungrounded main power supply conductors shall be provided and be capable of being locked in the open position.

(b) On Elevators with Generator Field Control. On elevators with generator field control, the disconnecting means shall be located within sight of the motor controller for the driving motor of the motor-generator set. Driving machines, motor-generator sets, or motion and operation controllers not within sight of the disconnecting means shall be provided with a manually operated switch installed in the control circuit to prevent starting. The manually operated switch(es) shall be installed adjacent to this equipment. Where the driving machine or the motor-generator set is located in a remote machine room or machinery space, a single means for disconnecting all ungrounded main power supply conductors shall be provided and be capable of being locked in the open position.

(c) On Escalators and Moving Walks. On escalators and moving walks, the disconnecting means shall be installed in the space where the controller is located.

(d) On Wheelchair Lifts and Stairway Chair Lifts. On wheelchair lifts and stairway chair lifts, the disconnecting means shall be located within sight of the motor controller.

(4) Identification and Signs. Where there is more than one driving machine in a machine room, the disconnecting means shall be numbered to correspond to the identifying number of the driving machine that they control. The disconnecting means shall be provided with a sign to identify the location of the supply side overcurrent protective device.

(B) Power from More Than One Source. On single-car and multicar installations, equipment receiving electrical power from more than one source shall be provided with a disconnecting means for each source of electrical power. The disconnecting means shall be within sight of the equipment served.

(C) Warning Sign for Multiple Disconnecting Means. Where multiple disconnecting means are used and parts of the controllers remain energized from a source other than the one disconnected, a warning sign shall be mounted on or next to the disconnecting means. The sign shall be clearly legible and shall read as follows:

WARNING
PARTS OF THE CONTROLLER ARE NOT
DEENERGIZED BY THIS SWITCH

(D) Interconnection Multicar Controllers. Where interconnections between controllers are necessary for the operation of the system on multicar installations that remain energized from a source other than the one disconnected, a warning sign in accordance with 430.3(C) shall be mounted on or next to the disconnecting means.

(E) Car Light, Receptacle(s), and Ventilation Disconnecting Means. Elevators shall have a single means for disconnecting all ungrounded car light, receptacle(s), and ventilation power-supply conductors for the elevator car. The disconnecting means shall be an enclosed externally operable fuses motor circuit switch or circuit breaker capable of being locked in the open position and shall be located in the machine room or control room for that elevator car. Where there is no machine

Copyright National Fire Protection Association
Provided by IHS under license with NFPA
No reproduction or networking permitted without license from IHS
Not for Resale

room or control room, the disconnecting means shall be located in the same space as the disconnecting means required by 430.3(A)(2). Disconnecting means shall be numbered to correspond to the identifying number of the elevator car whose light source they control. The disconnecting means shall be provided with a sign to identify the location of the supply side overcurrent protective device.

(F) Heating and Air-Conditioning Disconnecting Means. Elevators shall have a single means for disconnecting all ungrounded car heating and air-conditioning power-supply conductors for that elevator car. The disconnecting means shall be an enclosed externally operable fused motor circuit switch or circuit breaker capable of being locked in the open position and shall be located in the machine room or control room for that elevator car. Where there is no machine room or control room, the disconnecting means shall be located in the same space as the disconnecting means required by 430.3(A)(2). Where there is equipment for more than one elevator car in the machine room, the disconnecting means shall be numbered to correspond to the identifying number of the elevator car whose heating and air-conditioning source they control. The disconnecting means shall be provided with a sign to identify the location of the supply side overcurrent protective device.

(G) Utilization Equipment Disconnecting Means. Each branch circuit for other utilization equipment shall have a single means for disconnecting all ungrounded conductors. The disconnecting means shall be capable of being locked in the open position and shall be located in the machine room or control room/machine space or control space. Where there is more than one branch circuit for other utilization equipment, the disconnecting means shall be numbered to correspond to the identifying number of the equipment served. The disconnecting means shall be provided with a sign to identify the location of the supply side overcurrent protective device.

(H) Motor Controllers. Motor controllers shall be permitted outside the spaces herein specified, provided they are in enclosures with doors or removable panels that are capable of being locked in the closed position and the disconnecting means is located adjacent to or is an integral part of the motor controller. Motor controller enclosures for escalator or moving walks shall be permitted in the balustrade on the side located away from the moving steps or moving treadway. If the disconnecting means is an integral part of the motor controller, it shall be operable without opening the enclosure.

430.4 Electric Welders — Disconnecting Means.

(A) Arc Welders. A disconnecting means shall be provided in the supply circuit for each arc welder that is not equipped with a disconnect mounted as an integral part of the welder. The disconnecting means shall be a switch or circuit breaker, and its rating shall not be less than that necessary to accommodate overcurrent protection.

(B) Resistance Welder. A switch or circuit breaker shall be provided by which each resistance welder and its control equipment can be disconnected from the supply circuit. The ampere rating of this disconnecting means shall not be less than the supply conductor ampacity. The supply circuit switch shall be permitted as the welder disconnecting means where the circuit supplies only one welder.

430.5 Information Technology Equipment — Disconnecting Means. A means shall be provided to disconnect power to all electronic equipment in the information technology equipment room. There shall be a similar means to disconnect the power to all dedicated HVAC systems serving the room and cause all required fire/smoke dampers to close. The control for these disconnecting means shall be grouped and identified and shall be readily accessible at the principal exit doors. A single means to control both the electronic equipment and HVAC system shall be permitted. Where a pushbutton is used as a means to disconnect power, pushing the button in shall disconnect the power.

430.6 X-Ray Equipment.

(A) Disconnecting Means. A disconnecting means of adequate capacity for at least 50 percent of the input required for the momentary rating or 100 percent of the input required for the long-time rating of the X-ray equipment, whichever is greater, shall be provided in the supply circuit. The disconnecting means shall be operable from a location readily accessible from the X-ray control. For equipment connected to a 120-volt, nominal, branch circuit of 30 amperes or less, a grounding-type attachment plug cap and receptacle of proper rating shall be permitted to serve as a disconnecting means.

(B) Independent Control. Where more than one piece of equipment is operated from the same high-voltage circuit, each piece or each group of equipment as a unit shall be provided with a high-voltage switch or equivalent disconnecting means. This disconnecting means shall be constructed, enclosed, or located so as to avoid contact by persons with its live parts operating at 50 volts or more.

(C) Control — Industrial and Commercial Laboratory Equipment.

(1) Radiographic and Fluoroscopic Types. All radiographic- and fluoroscopic-type equipment shall be effectively enclosed or shall have interlocks that de-energize the equipment automatically to prevent ready access to live parts operating at 50 volts or more.

Copyright National Fire Protection Association
Provided by IHS under license with NFPA
No reproduction or networking permitted without license from IHS
Not for Resale

(2) Diffraction and Irradiation Types. Diffraction- and irradiation-type equipment or installations not effectively enclosed or provided with interlocks to prevent access to live current-carrying parts during operation shall be provided with a positive means to indicate when they are energized. The indicator shall be a pilot light, readable meter deflection, or equivalent means.

430.7 Induction and Dielectric Heating Equipment.

(A) General. Sections 430.7(B) and 430.7(C) cover the construction and installation of dielectric heating, induction heating, induction melting, and induction welding equipment and accessories for industrial and scientific applications. Medical and dental applications, appliances, or line frequency pipeline and vessel heating are not covered in this section.

(B) Guarding, Grounding, and Labeling.

(1) Enclosures. The converting device (excluding the component interconnections) shall be completely contained within an enclosure(s) of noncombustible material.

(2) Panel Controls. All panel controls shall be of deadfront construction.

(3) Access to Internal Equipment. Access doors or detachable access panels shall be employed for internal access to heating equipment. Access doors to internal compartments containing equipment employing voltages from 150 to 1000 volts ac or dc shall be capable of being locked closed or shall be interlocked to prevent the supply circuit from being energized while the door(s) is open. Access doors to internal compartments containing equipment employing voltages exceeding 1000 volts ac or dc shall be provided with a disconnecting means equipped with mechanical lockouts to prevent access while the heating equipment is energized, or the access doors shall be capable of being locked closed and interlocked to prevent the supply circuit from being energized while the door(s) is open. Detachable panels not normally used for access to such parts shall be fastened in a manner that will make them inconvenient to remove.

(4) Warning Labels or Signs. Warning labels or signs that read "DANGER — HIGH VOLTAGE — KEEP OUT" shall be attached to the equipment and shall be plainly visible where persons might come in contact with energized parts when doors are open or closed or when panels are removed from compartments containing over 150 volts ac or dc.

(5) Dielectric Heating Applicator Shielding. Protective cages or adequate shielding shall be used to guard dielectric heating applicators. Interlock switches shall be used on all hinged access doors, sliding panels, or other easy means of access to the applicator. All interlock switches shall be connected in such a manner as to remove all power from the applicator when any one of the access doors or panels is open.

(6) Disconnecting Means. A readily accessible disconnecting means shall be provided to disconnect each heating equipment from its supply circuit. The disconnecting means shall be located within sight from the controller or be capable of being locked in the open position. The rating of the disconnecting means shall be not less than the nameplate rating of the heating equipment. The supply circuit disconnecting means shall be permitted to serve as the heating equipment disconnecting means where only one heating equipment is supplied.

(C) Remote Control.

(1) Multiple Control Point. Where multiple control points are used for applicator energization, a means shall be provided and interlocked so that the applicator can be energized from only one control point at a time. A means for deenergizing the applicator shall be provided at each control point.

(2) Foot Switches. Switches operated by foot pressure shall be provided with a shield over the contact button to avoid accidental closing of a foot switch.

430.8 Electrolytic Cells.

(A) Scope. The provisions for this section shall apply to the installation of the electrical components and accessory equipment of electrolytic cells, electrolytic cell lines, and process power supply for the production of aluminum, cadmium, chlorine, copper, fluorine, hydrogen peroxide, magnesium, sodium, sodium chlorate, and zinc. Not covered by this section are cells used as a source of electric energy and for electroplating processes and cells used for the production of hydrogen.

(B) Definitions. For the purposes of 430.8, the following definitions shall apply.

Cell Line. An assembly of electrically interconnected electrolytic cells supplied by a source of direct current power.

Cell Line Attachments and Auxiliary Equipment. As applied to this section, a term that includes, but is not limited to, auxiliary tanks; process piping; ductwork; structural supports; exposed cell line conductors; conduits and other raceways; pumps, positioning equipment, and cell cutout or bypass electrical devices. Auxiliary equipment includes tools, welding machines, crucibles, and other portable equipment used for operation and maintenance within the electrolytic cell line working zone. In the cell line working zone, auxiliary equipment includes the exposed conductive surfaces of ungrounded cranes and crane-mounted cell-servicing equipment.

Copyright National Fire Protection Association
Provided by IHS under license with NFPA
No reproduction or networking permitted without license from IHS
Not for Resale

Electrolytic Cell. A tank or vat in which electrochemical reactions are caused by applying electrical energy for the purpose of refining or producing usable materials.

Electrolytic Cell Line Working Zone. The space envelope wherein operation or maintenance is normally performed on or in the vicinity of exposed energized surfaces of electrolytic cell lines or their attachments.

(C) Electrolytic Cell Lines. Electrolytic cell lines shall comply with the provisions of Articles 400, 410, 420, and 430, except as exempted by 430.8(C)(1) through 430.8(C)(4).

(1) Conductors. The electrolytic cell line conductors shall not be required to comply with the provisions of Article 400 and 410.2 and 410.3.

(2) Overcurrent Protection. Overcurrent protection of electrolytic cell dc process power circuits shall not be required to comply with the requirements of 410.5.

(3) Grounding. Equipment located or used within the electrolytic cell line working zone or associated with the cell line dc power circuits shall not be required to comply with the provisions of Section 410.6.

(4) Working Zone. The electrolytic cells, cell line attachments, and the wiring of auxiliary equipments and devices within the cell line working zone shall not be required to comply with the provisions of Article 400 and 410.2 and 410.3.

(D) Disconnecting Means.

(1) More Than One Process Power Supply. Where more than one dc cell line process power supply serves the same cell line, a disconnecting means shall be provided on the cell line circuit side of each power supply to disconnect it from the cell line circuit.

(2) Removable Links or Conductors. Removable links or removable conductors shall be permitted to be used as the disconnecting means.

(E) Portable Electric Equipment.

(1) Portable Electrical Equipment Not to Be Grounded. The frames and enclosures of portable electric equipment used within the cell line working zone shall not be grounded.

Exception No. 1: Where the cell line voltage does not exceed 200 volts dc, these frames and enclosures shall be permitted to be grounded.

Exception No. 2: These frames and enclosures shall be permitted to be grounded where guarded.

(2) Marking. Ungrounded portable electric equipment shall be distinctively marked and shall employ plugs and receptacles of a configuration that prevents connection of this equipment to grounding receptacles and that prevents inadvertent interchange of ungrounded and grounded portable electrical equipment.

(F) Power Supply Circuits and Receptacles for Portable Electric Equipment.

(1) Isolated Circuits. Circuits supplying power to ungrounded receptacles for hand-held, cord-connected equipments shall be electrically isolated from any distribution system supplying areas other than the cell line working zone and shall be ungrounded. Power for these circuits shall be supplied through isolating transformers. Primaries of such transformers shall operate at not more than 600 volts between conductors and shall be provided with proper overcurrent protection. The secondary voltage of such transformers shall not exceed 300 volts between conductors, and all circuits supplied from such secondaries shall be ungrounded and shall have an approved overcurrent device of proper rating in each conductor.

(2) Noninterchangeability. Receptacles and their mating plugs for ungrounded equipment shall not have provision for a grounding conductor and shall be of a configuration that prevents their use for equipment required to be grounded.

(3) Marking. Receptacles on circuits supplied by an isolating transformer with an ungrounded secondary shall be a distinctive configuration, distinctively marked, and shall not be used in any other location in the plant.

(G) Fixed and Portable Electrical Equipment.

(1) Electric Equipment Not Required to Be Grounded. Alternating-current systems supplying fixed and portable electric equipments within the cell line working zone shall not be required to be grounded.

(2) Exposed Conductive Surfaces Not Required to Be Grounded. Exposed conductive surfaces, such as electrical equipment housings, cabinets, boxes, motors, raceways, and the like, that are within the cell line working zone shall not be required to be grounded.

(3) Wiring Methods. Auxiliary electrical equipment such as motors, transducers, sensors, control devices, and alarms, mounted on an electrolytic cell or other energized surface, shall be connected to premises wiring systems by any of the following means:

(1) Multiconductor hard usage cord.
(2) Wire or cable in suitable raceways or metal or nonmetallic cable trays. If metal conduit, cable tray, armored cable, or similar metallic systems are used, they shall be installed with insulating breaks such that they do not cause a potentially hazardous electrical condition.

--`,,`,,`-`-`,,`,,`,`,,`---

Copyright National Fire Protection Association
Provided by IHS under license with NFPA
No reproduction or networking permitted without license from IHS
Not for Resale

(4) Circuit Protection. Circuit protection shall not be required for control and instrumentation that are totally within the cell line working zone.

(5) Bonding. Bonding of fixed electric equipment to the energized conductive surfaces of the cell line, its attachments, or auxiliaries shall be permitted. Where fixed electric equipment is mounted on an energized conductive surface, it shall be bonded to that surface.

(H) Auxiliary Nonelectric Connections. Auxiliary nonelectric connections, such as air hoses, water hoses, and the like, to an electrolytic cell, its attachments, or auxiliary equipments shall not have continuous conductive reinforcing wire, armor, braids, and the like. Hoses shall be of a nonconductive material.

(I) Cranes and Hoists.

(1) Conductive Surfaces to Be Insulated from Ground. The conductive surfaces of cranes and hoists that enter the cell line working zone shall not be required to be grounded. The portion of an overhead crane or hoist that contacts an energized electrolytic cell or energized attachments shall be insulated from ground.

(2) Hazardous Electrical Conditions. Remote crane or hoist controls that may introduce hazardous electrical conditions into the cell line working zone shall employ one or more of the following systems:

(1) Isolated and ungrounded control circuit in accordance with 430.8(F)(1)
(2) Nonconductive rope operator
(3) Pendant pushbutton with nonconductive supporting means and having nonconductive surfaces or ungrounded exposed conductive surfaces
(4) Radio

430.9 Electrically Driven or Controlled Irrigation Machines.

(A) Lightning Protection. If an irrigation machine has a stationary point, a grounding electrode system shall be connected to the machine at the stationary point for lightning protection.

(B) Main Disconnecting Means. The main disconnecting means for the machine shall provide overcurrent protection, and shall be at the point of connection of electrical power to the machine or shall be visible and not more than 15 m (50 ft) from the machine, and shall be readily accessible and capable of being locked in the open position. The disconnecting means shall have a horsepower and current rating not less than required for the main controller.

430.10 Swimming Pools, Fountains, and Similar Installations.

(A) Scope. Sections 430.10(B) through 430.10(F) shall apply to the construction and installation of electric wiring for and equipment in or adjacent to all swimming, wading, therapeutic, and decorative pools, fountains, hot tubs, spas, and hydromassage bathtubs, whether permanently installed or storable, and to metallic auxiliary equipment, such as pumps, filters, and similar equipment.

(B) Receptacles.

(1) Circulation and Sanitation System, Location. Receptacles that provide power for water-pump motors for or other loads directly related to the circulation and sanitation system shall be located at least 3.0 m (10 ft) from the inside walls of the pool, or not less than 1.5 m (5 ft) from the inside walls of the pool if they meet all of the following conditions:

(1) Consist of single receptacles
(2) Employ a locking configuration
(3) Are of the grounding type
(4) Have GFCI protection

(2) Other Receptacles, Location. Other receptacles shall be not less than 3.0 m (10 ft) from the inside walls of a pool.

(3) GFCI Protection. All 125-volt receptacles located within 6.0 m (20 ft) of the inside walls of a pool or fountain shall be protected by a ground-fault circuit interrupter. Receptacles that supply pool pump motors and that are rated 15 or 20 amperes, 120 volts through 240 volts, single phase, shall be provided with GFCI protection.

(4) Measurements. In determining the dimensions in 430.10 addressing receptacle spacings, the distance to be measured shall be the shortest path the supply cord of an appliance connected to the receptacle would follow without piercing a floor, wall, ceiling, doorway with hinged or sliding door, window opening, or other effective permanent barrier.

(C) Luminaires (Lighting Fixtures), Lighting Outlets, and Ceiling-Suspended (Paddle) Fans.

(1) New Outdoor Installation Clearances. In outdoor pool areas, luminaires (lighting fixtures), lighting outlets, and ceiling-suspended (paddle) fans installed above the pool area extending 1.5 m (5 ft) horizontally from the inside walls of the pool shall be installed at a height not less than 3.7 m (12 ft) above the maximum water level of the pool.

(2) Indoor Clearance. For installations in indoor pool areas, the clearances shall be the same as for outdoor areas unless modified as provided in this paragraph. If the branch circuit supplying the equipment is protected by a ground fault circuit interrupter, in which case the

Copyright National Fire Protection Association
Provided by IHS under license with NFPA
No reproduction or networking permitted without license from IHS
Not for Resale

following equipment shall be permitted at a height not less than 2.3 m (7 ft 6 in.) above the maximum pool water level:

(1) Totally enclosed luminaires (fixtures)
(2) Ceiling-suspended (paddle) fans identified for use beneath ceiling structures such as provided on porches or patios

(3) Existing Installations. Existing luminaires (lighting fixtures) and lighting outlets located less than 1.5 m (5 ft) measured horizontally from the inside walls of a pool shall be not less than 1.5 m (5 ft) above the surface of the maximum water level, shall be rigidly attached to the existing structure, and shall be protected by a ground-fault circuit interrupter.

(4) GFCI Protection in Adjacent Areas. Luminaires (lighting fixtures), lighting outlets, and ceiling-suspended (paddle) fans installed in the area extending between 1.5 m (5 ft) and 3.0 m (10 ft) horizontally from the inside walls of a pool shall be protected by a ground-fault circuit-interrupter unless installed not less than 1.5 m (5 ft) above the maximum water level and rigidly attached to the structure adjacent to or enclosing the pool.

(5) Cord-and-Plug-Connected Luminaires (Lighting Fixtures). Cord-and-plug-connected luminaires (lighting fixtures) shall comply with 430.10(C)(5)(a) through 430.10(C)(5)(c) where installed within 4.9 m (16 ft) of any point on the water surface, measured radially.

(a) Length. For other than storable pools, the flexible cord shall not exceed 900 mm (3 ft) in length.

(b) Equipment Grounding. The flexible cord shall have a copper equipment grounding conductor not smaller than 12 AWG. The cord shall terminate in a grounding-type attachment plug.

(c) Construction. The equipment grounding conductors shall be connected to a fixed metal part of the assembly. The removable part shall be mounted on or bonded to the fixed metal part.

(D) Switching Devices. Switching devices shall be located at least 1.5 m (5 ft) horizontally from the inside walls of a pool unless separated from the pool by a solid fence, wall, or other permanent barrier. Alternatively, a switch that is listed as being acceptable for use within 1.5 m (5 ft) shall be permitted.

(E) Underwater Equipment.

(1) Luminaire (Fixture) Design, Normal Operation. The design of an underwater luminaire (lighting fixture) supplied from a branch circuit either directly or by way of a transformer meeting the requirements of this section shall be such that, where the luminaire (fixture) is properly installed without a ground-fault circuit interrupter, there is no shock hazard with any likely combination of fault conditions during normal use (not relamping).

(2) GFCI Protection, Relamping. A ground-fault circuit interrupter shall be installed in the branch circuit supplying luminaires (fixtures) operating at more than 15 volts, so that there is no shock hazard during relamping. The installation of the ground-fault circuit interrupter shall be such that there is no shock hazard with any likely fault-condition combination that involves a person in a conductive path from any ungrounded part of the branch circuit or the luminaire (fixture) to ground.

(3) Voltage Limitation. No luminaire (lighting fixture) shall be installed for operation on supply circuits over 150 volts between conductors.

(4) Location, Wall-Mounted Luminaires (Fixtures). Luminaires (lighting fixtures) mounted in walls shall be installed with the top of the luminaire (fixture) lens not less than 450 mm (18 in.) below the normal water level of the pool, unless the luminaire (lighting fixture) is listed and identified for use at lesser depths. No luminaire (fixture) shall be installed less than 100 mm (4 in.) below the normal water level of the pool.

(5) Bottom-Mounted Luminaires (Fixtures). Luminaires (lighting fixtures) facing upward shall have the lens adequately guarded to prevent contact by any person.

(6) Dependence on Submersion. Luminaires (fixtures) that depend on submersion for safe operation shall be inherently protected against the hazards of overheating when not submerged.

(7) Compliance. Compliance with these requirements shall be obtained by the use of a listed underwater luminaire (lighting fixture) and by installation of a listed ground-fault circuit interrupter in the branch circuit or a listed transformer for luminaires (fixtures) operating at not more than 15 volts.

(F) Fountains: Ground-Fault Circuit Interrupter. Fountain equipment, unless listed for operation at 15 volts or less and supplied by a transformer shall be protected by a ground-fault circuit interrupter.

430.11 Carnivals, Circuses, Fairs, and Similar Events.

(A) Overhead Conductor Clearances.

(1) Vertical Clearances. Conductors shall have a vertical clearance to ground in accordance with 410.7(B). These clearances shall apply only to wiring installed outside of tents and concessions.

Copyright National Fire Protection Association
Provided by IHS under license with NFPA
No reproduction or networking permitted without license from IHS
Not for Resale

(2) Clearance to Rides and Attractions. Amusement rides and amusement attractions shall be maintained not less than 4.5 m (15 ft) in any direction from overhead conductors operating at 600 volts or less, except for the conductors supplying the amusement ride or attraction. Amusement rides or attractions shall not be located under or within 4.5 m (15 ft) horizontally of conductors operating in excess of 600 volts.

(B) Protection of Electrical Equipment. Electrical equipment and wiring methods in or on rides, concessions, or other units shall be provided with mechanical protection where such equipment or wiring methods are subject to physical damage.

(C) Guarding — Services. Service equipment shall not be installed in a location that is accessible to unqualified persons, unless the equipment is lockable.

(D) Wiring Methods.

(1) Type. Where flexible cords or cables are used, they shall be listed for extra-hard usage. Where flexible cords or cables are used and are not subject to physical damage, they shall be permitted to be listed for hard usage. Where used outdoors, flexible cords and cables shall also be listed for wet locations and shall be sunlight resistant. Extra-hard-usage flexible cords or cables shall be permitted for use as permanent wiring on portable amusement rides and attractions where not subject to physical damage.

(2) Single Conductor. Single conductor cable shall be permitted only in size 2 AWG or larger.

(3) Open Conductors. Open conductors are prohibited except as part of a listed assembly or festoon lighting installed in accordance with Section 410.7.

(4) Splices. Flexible cords or cables shall be continuous without splice or tap between boxes or fittings. Cord connectors shall not be laid on ground unless listed for wet locations. Connectors and cable connections shall not be placed in audience traffic paths or within areas accessible to the public unless guarded.

(5) Cord Connectors. Cord connectors shall not be laid on the ground unless listed for wet locations. Connectors and cable connections shall not be placed in audience traffic paths or within areas accessible to the public unless guarded.

(6) Support. Wiring for an amusement ride, attraction, tent, or similar structure shall not be supported by any other ride or structure unless specifically designed for the purpose.

(7) Protection. Flexible cords or cables accessible to the public shall be arranged to minimize the tripping hazard and shall be permitted to be covered with nonconductive matting, provided that the matting does not constitute a greater tripping hazard than the uncovered cables. It shall be permitted to bury cables.

(8) Boxes and Fittings. A box or fitting shall be installed at each connection point, outlet, switchpoint, or junction point.

(E) Rides, Tents, and Concessions.

(1) Disconnecting Means. Each ride and concessions shall be provided with a fused disconnect switch or circuit breaker located within sight and within 1.8 m (6 ft) of the operator's station. The disconnecting means shall be readily accessible to the operator, including when the ride is in operation. Where accessible to unqualified persons, the enclosure for the switch or circuit breaker shall be of the lockable type. A shunt trip device that opens the fused disconnect or circuit breaker when a switch located in the ride operator's console is closed shall be a permissible method of opening the circuit.

(2) Portable Wiring Inside Tents and Concessions. Electrical wiring for lighting, where installed inside of tents and concessions, shall be securely installed and, where subject to physical damage, shall be provided with mechanical protection. All lamps for general illumination shall be protected from accidental breakage by a suitable fixture or lampholder with a guard.

(F) Ground-Fault Circuit-Interrupter (GFCI) Protection for Personnel.

(1) General-Use 15- and 20-Ampere, 125-Volt Receptacles. All 125-volt, single-phase, 15- and 20-ampere receptacle outlets that are in use by personnel shall have listed ground-fault circuit-interrupter protection for personnel. The ground-fault circuit interrupter shall be permitted to be an integral part of the attachment plug or located in the power-supply cord, within 300 mm (12 in.) of the attachment plug. For the purposes of this section, listed cord sets incorporating ground-fault circuit-interrupter protection for personnel shall be permitted. Egress lighting shall not be connected to the load side terminals of a ground-fault circuit-interrupter receptacle.

(2) Appliance Receptacles. Receptacles supplying items, such as cooking and refrigeration equipment, that are incompatible with ground-fault circuit-interrupter devices shall not be required to have ground-fault circuit-interrupter protection.

(3) Other Receptacles. Other receptacle outlets not covered in 430.10(F)(1) and 430.10(F)(2) shall be permitted to have ground-fault circuit-interrupter protection for personnel, or a written procedure shall be continuously enforced

Copyright National Fire Protection Association
Provided by IHS under license with NFPA
No reproduction or networking permitted without license from IHS
Not for Resale

at the site by one or more designated persons to ensure the safety of equipment grounding conductors for all cord sets and receptacles.

(G) Equipment Bonding. The following equipment connected to the same source shall be bonded:

(1) Metal raceways and metal sheathed cable
(2) Metal enclosures of electrical equipment
(3) Metal frames and metal parts of rides, concessions, trailers, trucks, or other equipment that contain or support electrical equipment

(H) Equipment Grounding. All equipment requiring grounding shall be grounded by an equipment grounding conductor. The equipment grounding conductor shall be bonded to the system grounded conductor at the service disconnecting means, or in the case of a separately derived system such as a generator, at the generator or first disconnecting means supplied by the generator. The grounded circuit conductor shall not be connected to the equipment grounding conductor on the load side of the service disconnecting means or on the load side of a separately derived system disconnecting means.

(I) Grounding Conductor Continuity Assurance. The continuity of the grounding conductor system used to reduce electrical shock hazards shall be verified each time that portable electrical equipment is connected.

ARTICLE 440
Hazardous (Classified) Locations, Class I, II, and III, Divisions 1 and 2 and Class I, Zones 0, 1, and 2

440.1 Scope. This article shall apply to the requirements for electric equipment and wiring in locations that are classified depending on the properties of the flammable vapors, liquids, or gases, or combustible dusts or fibers that might be present therein and the likelihood that a flammable or combustible concentration or quantity is present. Hazardous (classified) locations can be found in occupancies such as, but not limited to, aircraft hangars, gasoline dispensing and service stations, bulk storage plants for gasoline or other volatile flammable liquids, paint-finishing process plants, health care facilities, agricultural or other facilities where excessive combustible dusts might be present, marinas, boat yards, and petroleum and chemical processing plants. Each room, section, or area shall be considered individually in determining its classification.

440.2 Definition: Intrinsically Safe Equipment. Apparatus in which the circuits are not necessarily intrinsically safe themselves but that affect the energy in the intrinsically safe circuits and are relied on to maintain intrinsic safety. Associated apparatus may be either of the following:

(1) Electrical apparatus that has an alternative-type protection for use in the appropriate hazardous (classified) location
(2) Electrical apparatus not so protected that shall not be used within a hazardous (classified) location

440.3 General.

(A) Documentation. All areas designated as hazardous (classified) locations shall be properly documented. This documentation shall be available to those authorized to design, install, inspect, maintain, or operate electrical equipment at the location.

(B) Approval for Class and Properties.

(1) Equipment Identification. Equipment shall be identified not only for the class of location but also for the explosive, combustible, or ignitible properties of the specific gas, vapor, dust, fiber, or flyings that will be present. Class I equipment shall not have any exposed surface that operates at a temperature in excess of the ignition temperature of the specific gas or vapor.

FPN: Luminaires (lighting fixtures) and other heat-producing apparatus, switches, circuit breakers, and plugs and receptacles are potential sources of ignition and are investigated for suitability in classified locations. Such type of equipment, as well as cable terminations for entry into explosionproof enclosures, are available as listed for Class I, Division 2 locations. Fixed wiring, however, might utilize wiring methods that are not evaluated with respect to classified locations. Wiring products such as cable, raceways, boxes, and fittings, therefore, are not marked as being suitable for Class I, Division 2 locations.

Suitability of identified equipment shall be determined by any of the following:

(1) Equipment listing or labeling
(2) Evidence of equipment evaluation from a qualified testing laboratory or inspection agency concerned with product evaluation
(3) Evidence acceptable to the authority having jurisdiction such as manufacturer's self-evaluation or an owner's engineering judgment

(2) Division Location. Equipment has been identified for a Division 1 location shall be permitted in a Division 2 location of the same class and group.

(3) General-Purpose Location. Where specifically permitted, general-purpose equipment or equipment in general-purpose enclosures shall be permitted to be installed in Division 2 locations if the equipment does not constitute a source of ignition under normal operating conditions.

Copyright National Fire Protection Association
Provided by IHS under license with NFPA
No reproduction or networking permitted without license from IHS
Not for Resale

(4) Equipment Requiring Sealing Means. Equipment, regardless of the classification of the location in which it is installed, that depends on a single compression seal, diaphragm, or tube to prevent flammable or combustible fluids from entering the equipment shall be identified for a Class I, Division 2 location. Equipment installed in a Class I, Division 1 location shall be identified for the Class I, Division 1 location.

(5) Normal Operating Conditions. Unless otherwise specified, normal operating conditions for motors shall be assumed to be rated full-load steady conditions.

(6) Flammable Gases and Dusts. Where flammable gases or combustible dusts are or may be present at the same time, the simultaneous presence of both shall be considered when determining the safe operation temperature of the electrical equipment.

FPN: The characteristics of various atmospheric mixtures of gases, vapors, and dusts depend on the specific material involved.

(C) Conduits. All threaded conduit or fittings shall be made wrenchtight to prevent sparking when fault current flows through the conduit system and to ensure the explosionproof and flameproof integrity of the conduit system where applicable. Equipment provided with threaded entries for field wiring connections shall be installed as applicable.

(D) Marking. All equipment shall be marked to show the class, group, and operating temperature or temperature class referenced to a 40°C (104°F) ambient.

Exception No. 1: Equipment of the non–heat-producing type, such as junction boxes, conduit, and fittings, and equipment of the heat-producing type and having a maximum temperature not more than 100°C (212°F) shall not be required to have a marked operating temperature or temperature class.

Exception No. 2: Fixed luminaires (lighting fixtures) marked for use in Class I, Division 2 or Class II, Division 2 locations only shall not be required to be marked to indicate the group.

Exception No. 3: Fixed general-purpose equipment in Class I locations, other than fixed luminaires (lighting fixtures), that is acceptable for use in Class I, Division 2 locations shall not be required to be marked with the class, group, division, or operating temperature.

Exception No. 4: Fixed dusttight equipment other than fixed luminaires (lighting fixtures) that is acceptable for use in Class II, Division 2 and Class III locations shall not be required to be marked with class, group, division, or operating temperature.

Exception No. 5: Electric equipment suitable for ambient temperatures exceeding 40°C (104°F) shall be marked with both the maximum ambient temperature and the operating temperature or temperature class at that ambient temperature.

440.4 Class I, Zone 0, 1, and 2 Locations.

(A) Scope. This article covers the requirements for the zone classification system as an alternative to the division classification system for electrical and electronic equipment and wiring for all voltage in Class I, Zone 0, Zone 1, and Zone 2 hazardous (classified) locations where fire or explosion hazards may exist due to flammable gases, vapors, or liquids.

FPN: Requirements for electric and electronic equipment and wiring for all voltages in Class I, Division 1 or Division 2; Class II, Division 1 or Division 2; and Class III, Division 1 or Division 2 hazardous (classified) locations where fire or explosion hazards may exist due to flammable gases or vapors, flammable liquids, or combustible dusts or fibers, are contained in Articles 500 through 504 of NFPA 70-2002, *National Electrical Code*.

(B) Threading. All threaded conduit or fittings referred to herein shall be threaded with a National (American) Standard Pipe Taper (NPT) standard conduit cutting die that provides a taper of 1 in 16 (¾ in. taper per foot). Such conduit shall be made wrenchtight to prevent sparking when fault current flows through the conduit system and to ensure the explosionproof or flameproof integrity of the conduit system where applicable. Equipment provided with threaded entries for field wiring connection shall be installed in accordance with 440.4(B)(1) or 440.4(B)(2).

(1) Equipment Provided with Threaded Entries for NPT-Threaded Conduit or Fittings. For equipment provided with threaded entries for NPT-threaded conduit or fittings, listed conduit, conduit fittings, or cable fittings shall be used.

(2) Equipment Provided with Threaded Entries for Metric Threaded Conduit or Fittings. For equipment with metric threaded entries, such entries shall be identified as being metric, or listed adapters to permit connection to conduit or NPT-threaded fittings shall be provided with the equipment. Adapters shall be used for connection to conduit or NPT-threaded fittings. Listed cable fittings that have metric threads shall be permitted to be used.

FPN: Threading specifications for metric threaded entries are located in ISO 965/1-1980, *Metric Screw Threads,* and ISO 965/3-1980, *Metric Screw Threads.*

(C) Special Precaution. Article 440 requires equipment construction and installation that will ensure safe performance under conditions of proper use and maintenance.

Copyright National Fire Protection Association
Provided by IHS under license with NFPA
No reproduction or networking permitted without license from IHS
Not for Resale

FPN No. 1: It is important that inspection authorities and users exercise more than ordinary care with regard to the installation and maintenance of electrical equipment in hazardous (classified) locations.

FPN No. 2: Low ambient conditions require special consideration. Electrical equipment depending on the protection techniques may not be suitable for use at temperatures lower than −20°C (−4°F) unless they are approved for use at lower temperatures. However, at low ambient temperatures, flammable concentrations of vapors may exist in a location classified Class I, Zones 0, 1, or 2 at normal ambient temperature.

(1) Supervision of Work. Classification of areas and selection of equipment and wiring methods shall be under the supervision of a qualified Registered Professional Engineer.

(2) Dual Classification. In instances of areas within the same facility classified separately, Class I, Zone 2 locations shall be permitted to abut, but not overlap, Class I, Division 2 locations. Class I, Zone 0 or Zone 1 locations shall not abut Class I, Division 1 or Division 2 locations.

(3) Reclassification Permitted. A Class I, Division 1 or Division 2 location shall be permitted to be reclassified as a Class I, Zone 0, Zone 1, or Zone 2 location, provided all of the space that is classified because of a single flammable gas or vapor source is reclassified under the requirements of the section.

(D) Class I Temperature. The temperature marking shall not exceed the ignition temperature of the specific gas or vapor to be encountered.

FPN: For information regarding ignition temperatures of gases and vapors, see NFPA 497-1997, *Recommended Practice for the Classification of Flammable Liquids, Gases, or Vapors and of Hazardous (Classified) Locations for Electrical Installations in Chemical Process Areas,* and IEC 79-20-1996, *Electrical Apparatus for Explosive Gas Atmospheres, Data for Flammable Gases and Vapours, Relating to the Use of Electrical Apparatus.*

(E) Equipment.

(1) Suitability. Suitability of identified equipment shall be determined by one of the following:

(1) Equipment listing or labeling
(2) Evidence of equipment evaluation for a qualified testing laboratory or inspection agency concerned with product evaluation
(3) Evidence acceptable to the authority having jurisdiction such as a manufacturer's self-evaluation or an owner's engineering judgment

(2) Listing.

(a) Equipment that is listed for a Zone 0 location shall be permitted in a Zone 1 or Zone 2 location of the same gas or vapor. Equipment that is listed for a Zone 1 location shall be permitted in a Zone 2 location of the same gas or vapor.

(b) Equipment shall be permitted to be listed for a specific gas or vapor, specific mixtures of gases or vapors, or any specific combination of gases or vapors.

(3) Marking. Equipment shall be marked in accordance with 440.3(E)(3)(a) or 440.3(E)(3)(b).

(a) Division Equipment. Equipment approved for Class I, Division 1 or Class I, Division 2 shall, in addition to being marked, be permitted to be marked with all of the following:

(1) Class I, Zone 1 or Class I, Zone 2 (as applicable)
(2) Applicable gas classification group(s)
(3) Temperature classification

(b) Zone Equipment. Equipment meeting one or more of the protection techniques shall be marked with the following in the order shown:

(1) Class
(2) Zone
(3) Symbol "AEx"
(4) Protection technique(s)
(5) Applicable gas classification group(s)
(6) Temperature classification

Exception: Intrinsically safe associated apparatus shall be required to be marked only with items (4), (5) and (6).

(c) Group and Zone Markings for Zone Equipment. Electric equipment of types of protection "e," "m," "p," or "q" shall be marked Group II. Electric equipment of types of protection "d," "ia," "ib," "[ia]," or "[ib]" shall be marked Group IIA, or IIB, or IIC, or for a specific gas or vapor. Electric equipment of types of protection "n" shall be marked Group II unless it contains enclosed-break devices, nonincendive components, or energy-limited equipment or circuits, in which case it shall be marked Group IIA, IIB, or IIC, or a specific gas or vapor. Electrical equipment of other types of protection shall be marked Group II unless the type of protection utilized by the equipment requires that it be marked Group IIA, IIB, or IIC, or a specific gas or vapor. [*See Figure 440.4(E)(3)(c).*]

FPN: An example of such a required marking is "Class I, Zone 0, AEx ia IIC T6."

(F) Documentation for Industrial Occupancies. All areas in industrial occupancies designated as hazardous (classified) locations shall be properly documented. This documentation shall be available to those authorized to design, install, inspect, maintain, or operate electrical equipment at the location.

(G) Grounding and Bonding. Grounding and bonding shall comply with the following and other applicable requirements.

Copyright National Fire Protection Association
Provided by IHS under license with NFPA
No reproduction or networking permitted without license from IHS
Not for Resale

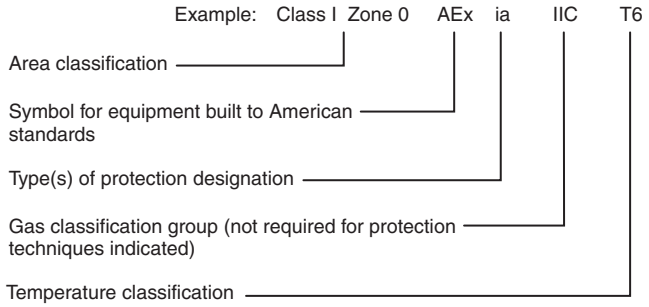

Figure 440.4(E)(3)(c) Class I, Zone 0, AEx ia IIC T6.

(1) Bonding. The locknut-bushing and double-locknut type of contacts shall not be depended on for bonding purposes, but bonding jumpers with proper fittings or other approved means of bonding shall be used. Such means of bonding shall apply to all intervening raceways, fittings, boxes, enclosures, and so forth, between Class I locations and the point of grounding for service equipment or point of grounding of a separately derived system.

Exception: The specific bonding means shall be required only to the nearest point where the grounded circuit conductor and the grounding electrode are connected together on the line side of the building or structure disconnecting means, provided the branch-circuit overcurrent protection is located on the line side of the disconnecting means.

(2) Flexible Metal Conduit. Where flexible metal conduit or liquidtight flexible metal conduit is used and is to be relied on to complete a sole equipment grounding path, it shall be installed with internal or external bonding jumpers in parallel with each conduit.

Exception: In Class I, Zone 2 locations, the bonding jumper shall be permitted to be deleted where all the following conditions are met:

(a) Listed liquidtight flexible metal conduit 1.8 m (6 ft) or less in length, with fittings listed for grounding, is used.
(b) Overcurrent protection in the circuit is limited to 10 amperes or less.
(c) The load is not a power utilization load.

ARTICLE 450
Special Systems

450.1 Systems Over 600 Volts, Nominal. Sections 450.1(A) through 450.1(I) cover the general requirements for equipment operating at more than 600 volts, nominal.

(A) Aboveground Wiring Methods. Aboveground conductors shall be installed in rigid metal conduit, in intermediate metal conduit, in electrical metallic tubing, in rigid nonmetallic conduit, in cable trays, as busways, as cablebus, in other identified raceways, or as open runs of metal-clad cable suitable for the use and purpose. In locations accessible to qualified persons only, open runs of Type MV cables, bare conductors, and bare busbars shall also be permitted. Busbars shall be permitted to be either copper or aluminum.

(B) Braid-Covered Insulated Conductors — Open Installations. Open runs of braid-covered insulated conductors shall have a flame-retardant braid. If the conductors used do not have this protection, a flame-retardant saturant shall be applied to the braid covering after installation. This treated braid covering shall be stripped back a safe distance at conductor terminals, according to the operating voltage. This distance shall not be less than 25 mm (1 in.) for each kilovolt of the conductor-to-ground voltage of the circuit, where practicable.

(C) Insulation Shielding. Metallic and semiconducting insulation shielding components of shielded cables shall be removed for a distance dependent on the circuit voltage and insulation. Stress reduction means shall be provided at all terminations of factory-applied shielding. Metallic shielding components such as tapes, wires, or braids, or combinations thereof, and their associated conducting and semiconducting components shall be grounded.

(D) Moisture or Mechanical Protection for Metal-Sheathed Cables. Where cable conductors emerge from a metal sheath and where protection against moisture or physical damage is necessary, the insulation of the conductors shall be protected by a cable sheath terminating device.

(E) Circuit-Interrupting Devices.

(1) Circuit Breakers: Location.

(a) Circuit breakers installed indoors shall be mounted either in metal-enclosed units or fire-resistant cell-mounted units, or they shall be permitted to be open-mounted in locations accessible to qualified persons only.

(b) Circuit breakers used to control oil-filled transformers shall either be located outside the transformer vault or be capable of operation from outside the vault.

(c) Oil circuit breakers shall be arranged or located so that adjacent readily combustible structures or materials are safeguarded in an approved manner.

(2) Power Fuses and Fuseholders — Use. Where fuses are used to protect conductors and equipment, a fuse shall be placed in each ungrounded conductor. Two power fuses shall be permitted to be used in parallel to protect the same

Copyright National Fire Protection Association
Provided by IHS under license with NFPA
No reproduction or networking permitted without license from IHS
Not for Resale

load if both fuses have identical ratings and both fuses are installed in an identified common mounting with electrical connections that will divide the current equally. Power fuses of the vented type shall not be used indoors, underground, or in metal enclosures unless identified for the use.

(3) Distribution Cutouts and Fuse Links — Expulsion Type.

(a) Installation. Cutouts shall be located so that they may be readily and safely operated and re-fused, and so that the exhaust of the fuses does not endanger persons. Distribution cutouts shall not be used indoors, underground, or in metal enclosures.

(b) Operation. Where fused cutouts are not suitable to interrupt the circuit manually while carrying full load, an approved means shall be installed to interrupt the entire load. Unless the fused cutouts are interlocked with the switch to prevent opening of the cutouts under load, a conspicuous sign shall be placed at such cutouts identifying that they shall not be operated under load.

(4) Oil-Filled Cutouts — Enclosure. Suitable barriers or enclosures shall be provided to prevent contact with nonshielded cables or energized parts of oil-filled cutouts.

(5) Load Interrupters. Load interrupter switches shall be permitted if suitable fuses or circuits are used in conjunction with these devices to interrupt fault currents. Where these devices are used in combination, they shall be coordinated electrically so that they will safely withstand the effects of closing, carrying, or interrupting all possible currents up to the assigned maximum short-circuit rating. Where more than one switch is installed with interconnected load terminals to provide for alternate connection to different supply conductors, each switch shall be provided with a conspicuous sign identifying this hazard.

(F) Isolating Means. Means shall be provided to completely isolate an item of equipment. The use of isolating switches shall not be required where there are other ways of de-energizing the equipment for inspection and repairs, such as drawout-type metal-enclosed switchgear units and removable truck panels. Isolating switches not interlocked with an approved circuit-interrupting device shall be provided with a sign warning against opening them under load. A fuseholder and fuse, designed for the purpose, shall be permitted as an isolating switch.

(G) Accessibility of Energized Parts.

(1) High-Voltage Equipment. Doors that would provide unqualified persons access to high-voltage energized parts shall be locked.

(2) Low-Voltage Control Equipment. Low-voltage control equipment, relays, motors, and the like shall not be installed in compartments with exposed high-voltage energized parts or high-voltage wiring unless either of the following conditions is met:

(1) The access means is interlocked with the high-voltage switch or disconnecting means to prevent the access means from being opened or removed.
(2) The high-voltage switch or disconnecting means is in the isolating position.

(3) High-Voltage Instruments or Control Transformers and Space Heaters. High-voltage instrument or control transformers and space heaters shall be permitted to be installed in the high-voltage compartment without access restrictions beyond those that apply to the high-voltage compartment generally.

(H) Mobile and Portable Equipment.

(1) Enclosures. All energized switching and control parts shall be enclosed in effectively grounded metal cabinets or enclosures. These cabinets or enclosures shall be marked "DANGER — HIGH VOLTAGE — KEEP OUT" and shall be locked so that only authorized and qualified persons can enter. Circuit breakers and protective equipment shall have the operating means projecting through the metal cabinet or enclosure so these units can be reset without opening locked doors. With doors closed, reasonable safe access for normal operation of these units shall be provided.

FPN: For further information on hazard signs and labels, see ANSI Z535-4, *Product Signs and Safety Labels*.

(2) Power Cable Connections to Mobile Machines. A metallic enclosure shall be provided on the mobile machine for enclosing the terminals of the power cable. The enclosure shall include provisions for a solid connection for the ground wire(s) terminal to effectively ground the machine frame. Ungrounded conductors shall be attached to insulators or be terminated in approved high-voltage cable couplers (which include ground wire connectors) of proper voltage and ampere rating. The method of cable termination used shall prevent any strain or pull on the cable from stressing the electrical connections. The enclosure shall have provision for locking so only authorized and qualified persons may open it, and shall be marked

"DANGER — HIGH VOLTAGE — KEEP OUT."

FPN: For further information on hazard signs and labels, see ANSI Z535-4, *Product Signs and Safety Labels*.

(I) Tunnel Installations.

(1) General. The provisions of 450.1(H) shall apply to the installation and use of high-voltage power distribution and utilization equipment that is portable, mobile, or both, such as substations, trailers, cars, mobile shovels, draglines,

Copyright National Fire Protection Association
Provided by IHS under license with NFPA
No reproduction or networking permitted without license from IHS
Not for Resale

hoists, drills, dredges, compressors, pumps, conveyors, and underground excavators, and the like.

(2) Conductors. High-voltage conductors in tunnels shall be installed in metal conduit or other metal raceway, Type MC cable, or other approved multiconductor cable. Multiconductor portable cable shall be permitted to supply mobile equipment.

(3) Protection Against Physical Damage. Conductors and cables in tunnels shall be located above the tunnel floor and be so placed or guarded to protect them from physical damage.

(4) Equipment Grounding Conductors. An equipment grounding conductor shall be run with circuit conductors inside the metal raceway or inside the multiconductor cable jacket. The equipment grounding conductor shall be permitted to be insulated or bare.

(5) Energized Parts. Bare terminals of transformers, switches, motor controllers, and other equipment shall be enclosed to prevent accidental contact with energized parts.

(6) Enclosures. Enclosures for use in tunnels shall be dripproof, weatherproof, or submersible as required by the environmental conditions. Switch or contactor enclosures shall not be used as junction boxes or raceways for conductors feeding through or tapping off to other switches, unless special designs are used to provide adequate space for this purpose.

(7) Disconnecting Means. A switch or circuit breaker that simultaneously opens all ungrounded conductors of the circuit shall be installed within sight of each transformer or motor. The switch or circuit breaker for a transformer shall have an ampere rating not less than the ampacity of the transformer supply conductors.

(8) Grounded and Bonded. All non–current-carrying metal parts of electric equipment and all metal raceways and cable sheaths shall be effectively grounded and bonded to all metal pipes and rails at the portal and at intervals not exceeding 300 m (1000 ft) throughout the tunnel.

450.2 Emergency Systems.

(A) Scope. The provisions of this section shall apply to the electrical safety of the installation, operation, and maintenance of emergency systems consisting of circuits and equipment intended to supply, distribute, and control electricity for illumination, power, or both, to required facilities when the normal electrical supply or system is interrupted. Emergency systems are those systems legally required and classified as emergency by municipal, state, federal, or other codes, or by any governmental agency having jurisdiction. These systems are intended to automatically supply illumination, power, or both, to designated areas and equipment in the event of failure of the normal supply or in the event of accident to elements of a system intended to supply, distribute, and control power and illumination essential for safety to human life.

(B) Wiring. Wiring of two or more emergency circuits supplied from the same source shall be permitted in the same raceway, cable, box, or cabinet. Wiring from an emergency source or emergency source distribution overcurrent protection to emergency loads shall be kept entirely independent of all other wiring and equipment, unless otherwise permitted in (1) through (4):

(1) Wiring from the normal power source located in transfer equipment enclosures
(2) Wiring supplied from two sources in exit or emergency luminaires (lighting fixtures)
(3) Wiring from two sources in a common junction box, attached to exit or emergency luminaires (lighting fixtures)
(4) Wiring within a common junction box attached to unit equipment, containing only the branch circuit supplying the unit equipment and the emergency circuit supplied by the unit equipment

(C) Emergency Illumination. Emergency illumination shall include all required means of egress lighting, illuminated exit signs, and all other lights specified as necessary to provide required illumination. Emergency lighting systems shall be designed and installed so that the failure of any individual lighting elements, such as the burning out of a light bulb, cannot leave in total darkness any space that requires emergency illumination. Where high-intensity discharge lighting such as high- and low-pressure sodium, mercury vapor, and metal halide is used as the sole source of normal illumination, the emergency lighting system shall be required to operate until normal illumination has been restored.

Exception: Alternative means that ensure the emergency lighting illumination level is maintained shall be permitted.

(D) Signs.

(1) Emergency Sources. A sign shall be placed at the service entrance equipment indicating type and location of on-site emergency power sources.

Exception: A sign shall not be required for individual unit equipment.

(2) Grounding. Where the grounded circuit conductor connected to the emergency source is connected to a grounding electrode conductor at a location remote from the emergency source, there shall be a sign at the grounding location that shall identify all emergency and normal sources connected at that location.

Copyright National Fire Protection Association
Provided by IHS under license with NFPA
No reproduction or networking permitted without license from IHS
Not for Resale

450.3 Class 1, Class 2, and Class 3 Remote Control, Signaling, and Power-Limited Circuits.

(A) Classification. Class 1, Class 2, or Class 3 remote control, signaling, or power-limited circuits shall be characterized by usage and electrical power limitations that differentiate them from light and power circuits.

(1) Class 1 Circuits.

(a) Class 1 Power-Limited Circuits. These circuits shall be supplied from a source that has a rated output of not more than 30 volts and 1000 volt-amperes.

(b) Class 1 Remote-Control and Signaling Circuits. These circuits shall not exceed 600 volts. The power output of the source shall not be required to be limited.

(2) Power Sources for Class 2 and Class 3 Circuits. The power source for a Class 2 or a Class 3 circuit shall be as specified in (1) through (5):

(1) A listed Class 2 or 3 transformer
(2) A listed Class 2 or 3 power supply
(3) Other listed equipment marked to identify the Class 2 or Class 3 power source

Exception to (3): Thermocouples shall not require listing as a Class 2 power source.

(4) Listed information technology (computer) equipment limited power circuits

(5) A dry cell battery shall be considered an inherently limited Class 2 power source, provided the voltage is 30 volts or less and the capacity is equal to or less than that available from series connected No. 6 carbon zinc cells

(3) Separation from Electric Light, Power, Class 1, Non–Power-Limited Fire Alarm Circuit Conductors, and Medium Power Network-Powered Broadband Communications Cables. Cables and conductors of Class 2 and Class 3 circuits shall not be placed in any cable, cable tray, compartment, enclosure, manhole, outlet box, device box, raceway, or similar fitting with conductors of electric light, power, Class 1, non–power-limited fire alarm circuits, and medium power network-powered broadband communications cables.

(4) Class 1, Class 2, and Class 3 Circuit Identification. Class 1, Class 2, and Class 3 circuits shall be identified at terminal and junction locations in a manner that prevents unintentional interference with other circuits during testing and servicing.

450.4 Fire Alarm Systems.

(A) Classifications. Fire alarm circuits shall be classified as either non–power-limited or power-limited.

(B) Power Sources. The power sources for use with fire alarm circuits shall be either power-limited or non–power-limited as required in 450.4(B)(1) and 450.4(B)(2).

(1) Non–Power-Limited Fire Alarm (NPLFA) Circuits. The power source of non–power-limited fire alarm circuits shall have an output voltage not more than 600 volts, nominal. These circuits shall not be supplied through ground-fault circuit interrupters.

(2) Power-Limited Fire Alarm (PLFA) Circuits. The power source for a power-limited fire alarm circuit shall be as specified in (1) through (3):

(1) Transformers. A listed PLFA for Class 3 transformer
(2) Power Supplies. A listed PLFA for Class 3 power supply
(3) Listed Equipment. Listed equipment marked to identify the PLFA power source

(C) Conductors of Different Circuits in Same Cable, Enclosure, or Raceway: Class 1 with NPLFA Circuits. Class 1 and non–power-limited fire alarm circuits shall be permitted to occupy the same cable, enclosure, or raceway without regard to whether the individual circuits are alternating current or direct current, provided that all conductors are insulated for the maximum voltage of any conductor in the enclosure or raceway.

(D) Separation from Electric Light, Power, Class 1, NPLFA, and Medium Power Network-Powered Broadband Communications Circuit Conductors. Power-limited fire alarm circuit cables and conductors shall not be placed in any cable, cable tray, compartment, enclosure, manhole, outlet box, device box, raceway, or similar fitting with conductors of electric light, power, Class 1, non–power-limited fire alarm circuits and medium power network-powered broadband communications circuits.

(E) Other Applications. For other applications, power-limited fire alarm circuit conductors shall be separated by at least 50 mm (2 in.) from conductors of any electric light, power, Class 1, non–power-limited fire alarm, or medium power network-powered broadband communications circuits unless one of the following conditions is met:

(1) Either (a) all of the electric light, power, Class 1, non–power-limited fire alarm, and medium power network-powered broadband communications circuit conductors or (b) all of the power-limited fire alarm circuit conductors are in a raceway or in metal-sheathed, metal-clad, nonmetallic-sheathed, or Type UF cables.
(2) All of the electric light, power, Class 1 non–power-limited fire alarm, and medium power network-powered broadband communications circuit conductors are permanently separated from all of the power-limited fire alarm circuit conductors by a continuous

Copyright National Fire Protection Association
Provided by IHS under license with NFPA
No reproduction or networking permitted without license from IHS
Not for Resale

and firmly fixed nonconductor, such as porcelain tubes or flexible tubing, in addition to the insulation on the conductors.

(F) Class 2 Circuits with PLFA Circuits. Conductors of one or more Class 2 circuits shall be permitted within the same cable, enclosure, or raceway with conductors of power-limited fire alarm circuits, provided that the insulation of the Class 2 circuit conductors in the cable, enclosure, or raceway is at least that required by the power-limited fire alarm circuits.

(G) Fire Alarm Circuit Identification. Fire alarm circuits shall be identified at terminal and junction locations, in a manner that prevents unintentional interference with the signaling circuit during testing and servicing.

450.5 Communications Systems.

(A) Scope. These provisions for communications systems shall apply to telephone, telegraph (except radio), outside wiring for fire alarm and burglar alarm, and similar central station systems, and telephone systems not connected to a central station system but using similar types of equipment, methods of installation, and maintenance.

(B) Protective Devices: Application. A listed primary protector shall be provided on each circuit run partly or entirely in aerial wire or aerial cable not confined within a block. Also, a listed primary protector shall be provided on each circuit, aerial or underground, located within the block containing the building served so as to be exposed to accidental contact with electric light or power conductors operating at over 300 volts to ground. In addition, where there exists a lightning exposure, each interbuilding circuit on a premises shall be protected by a listed primary protector at each end of the interbuilding circuit.

(C) Lightning Conductors. Where practicable, a separation of at least 1.8 m (6 ft) shall be maintained between communications wires and cables on buildings and lightning conductors.

(1) Overhead Communications Wires and Cables: On Poles and In-Span. Where communications wires and cables and electric light or power conductors are supported by the same pole or run parallel to each other in-span, the following conditions shall be met:

(1) Relative Location. Where practicable, the communications wires and cables shall be located below the electric light or power conductors.
(2) Attachment to Crossarms. Communications wires and cables shall not be attached to a crossarm that carries electric light or power conductors.

(2) Other Applications. Communications wires and cables shall be separated at least 50 mm (2 in.) from conductors of any electric light, power, Class 1, non–power-limited fire alarm, or medium power network-powered broadband communications circuits.

(D) Cable and Primary Protector Grounding. The metallic member(s) of the cable sheath, where required to be grounded, and primary protectors shall be grounded as specified in 450.5(D)(1) through 450.5(D)(4). The metallic sheath of communications cables entering buildings shall be grounded as close as practicable to the point of entrance or shall be interrupted as close to the point of entrance as practicable by an insulating joint or equivalent device.

(1) Grounding Conductor.

(a) Insulation. The grounding conductor shall be insulated and shall be listed as suitable for the purpose.

(b) Material. The grounding conductor shall be copper or other corrosion-resistant conductive material, stranded or solid.

(c) Size. The grounding conductor shall not be smaller than 14 AWG.

(d) Length. The primary protector grounding conductor shall be as short as practicable.

(e) Run in Straight Line. The grounding conductor shall be run to the grounding electrode in as straight a line as practicable.

(f) Physical Damage. Where necessary, the grounding conductor shall be guarded from physical damage. Where the grounding conductor is run in a metal raceway, both ends of the raceway shall be bonded to the grounding conductor or the same terminal or electrode to which the grounding conductor is connected.

(2) Electrode. The grounding conductor shall be connected as follows:

(1) To the nearest accessible location on the following:
   a. The building or structure grounding electrode system
   b. The grounded interior metal water piping system, within 1.5 m (5 ft) from its point of entrance to the building
   c. The power service accessible means external to enclosures
   d. The metallic power service raceway
   e. The service equipment enclosure
   f. The grounding electrode conductor or the grounding electrode conductor metal enclosure
   g. To the grounding conductor or the grounding electrode of a building or structure disconnecting means that is grounded to an electrode
(2) If the building or structure served has no grounding means, as described in item (1):
   a. To any one of the individual electrodes

Copyright National Fire Protection Association
Provided by IHS under license with NFPA
No reproduction or networking permitted without license from IHS
Not for Resale

b. If the building or structure served has no grounding means, as described in 450(D)(1) or 450(D)(2), to an effectively grounded metal structure or to a ground rod or pipe not less than 1.5 m (5 ft) in length and 12.7 mm (½ in.) in diameter, driven, where practicable, into permanently damp earth and separated from lightning conductors and at least 1.8 m (6 ft) from electrodes of other systems. Steam or hot water pipes or air terminal conductors (lightning-rod conductors) shall not be employed as electrodes for protectors.

(3) Electrode Connection. Connectors, clamps, fittings, or lugs used to attach grounding conductors and bonding jumpers to grounding electrodes or to each other that are to be concrete-encased or buried in the earth shall be suitable for its application.

(4) Bonding of Electrodes. A bonding jumper not smaller than 6 AWG copper or equivalent shall be connected between the communications grounding electrode and power grounding electrode system at the building or structure served where separate electrodes are used. Bonding together of all separate electrodes shall be permitted

FPN: Bonding together of all separate electrodes limits potential differences between them and between their associated wiring systems.

450.6 Solar Photovoltaic Systems.

(A) General. The provisions of this section shall apply to solar photovoltaic electrical energy systems, including the array circuit(s), inverter(s), and controller(s) for such systems. Solar photovoltaic systems covered by this section may be interactive with other electrical power production sources or stand-alone, with or without electrical energy storage such as batteries. These systems can have ac or dc output for utilization.

(B) Conductors of Different Systems. Photovoltaic source circuits and photovoltaic output circuits shall not be contained in the same raceway, cable tray, cable, outlet box, junction box, or similar fitting as feeders or branch circuits of other systems, unless the conductors of the different systems are separated by a partition or are connected together.

(C) Disconnecting Means.

(1) All Conductors. Means shall be provided to disconnect all current-carrying conductors of a photovoltaic power source from all other conductors in a building or other structure. Where a circuit grounding connection is not designed to be automatically interrupted as part of the ground-fault protection system, a switch or circuit breaker used as a disconnecting means shall not have a pole in the grounded conductor.

(2) Switch or Circuit Breaker. Where all terminals of the disconnecting means can be energized in the open position, a warning sign shall be mounted on or adjacent to or on the disconnecting means. The sign shall be clearly legible and have the following words or equivalent:

WARNING
ELECTRIC SHOCK HAZARD.
DO NOT TOUCH TERMINALS.
TERMINALS ON BOTH THE LINE AND
LOAD SIDES MAY BE ENERGIZED
IN OPEN POSITION.

450.7 Integrated Electrical Systems.

(A) Scope. This section shall apply to integrated electrical systems, other than unit equipment, in which orderly shutdown is necessary to ensure safe operation. An integrated electrical system as used in this section is a unitized segment of an industrial wiring system where all of the following conditions are met:

(1) An orderly shutdown is required to minimize personnel hazard and equipment damage.
(2) The conditions of maintenance and supervision ensure that qualified persons service the system.
(3) Effective safeguards, acceptable to the authority having jurisdiction, are established and maintained.

(B) Location of Overcurrent Devices in or on Premises. Location of overcurrent devices that are critical to integrated electrical systems shall be permitted to be accessible, with mounting heights permitted to ensure security from operation by nonqualified personnel.

Copyright National Fire Protection Association
Provided by IHS under license with NFPA
No reproduction or networking permitted without license from IHS
Not for Resale

Annex A Referenced Publications

A.1 General. The documents or portions thereof listed in this annex are referenced within this standard and shall be considered part of the requirements of this document.

A.2 NFPA Publications. National Fire Protection Association, 1 Batterymarch Park, Quincy, MA 02169-7471.

NFPA 70, *National Electrical Code®*, 2002.

A.3 Other Publications.

A.3.1 ANSI Publications. American National Standards Institute, Inc., 25 West 43rd Street, 4th Floor, New York, NY 10036.

ANSI A14.1, *Safety Requirements for Portable Wood Ladders,* 1994.

ANSI A14.3, *Safety Requirements for Fixed Ladders,* 2002.

ANSI A14.4, *Safety Requirements for Job-Made Ladders,* 1992.

ANSI A14.5, *Safety Requirement for Portable Reinforced Plastic Ladders,* 2000.

ANSI Z41, *Standard for Personnel Protection, Protective Footwear,* 1998.

ANSI Z87.1, *Practice for Occupational and Educational Eye and Face Protection,* 1998.

ANSI Z89.1, *Requirements for Protective Headwear for Industrial Workers,* 1997.

ANSI Z535, *Series of Standards for Safety Signs and Tags,* 1998.

A.3.2 ASTM Publications. American Society for Testing and Materials, 100 Barr Harbor Drive, West Conshohocken, PA 19428-2959.

ASTM D 120-02, *Standard Specification for Rubber Insulating Gloves,* 2002.

ASTM D 1048, *Standard Specification for Rubber Insulating Blankets,* 1999.

ASTM D 1049, *Standard Specification for Rubber Covers,* 1998.

ASTM D 1050, *Standard Specification for Rubber Insulating Line Hoses,* 1990.

ASTM D 1051-02, *Standard Specification for Rubber Insulating Sleeves,* 2002.

ASTM F 478, *Standard Specification for In-Service Care of Insulating Line Hose and Covers,* 1999.

ASTM F 479, *Standard Specification for In-Service Care of Insulating Blankets,* 1999.

ASTM F 496-02, *Standard Specification for In-Service Care of Insulating Gloves and Sleeves,* 2002.

ASTM F 696-02, *Standard Specification for Leather Protectors for Rubber Insulating Gloves and Mittens,* 2002.

ASTM F 711, *Standard Specification for Fiberglass-Reinforced Plastic (FRP) Rod and Tube Used; in Line Tools,* 1989 (R 1997).

ASTM F 712, *Standard Test Methods for Electrically Insulating Plastic Guard Equipment for Protection of Workers,* 1995.

ASTM F 855, *Standard Specification for Temporary Protective Grounds to Be Used on De-energized Electric Power Lines and Equipment,* 1997.

ASTM F 1117-98, *Standard Specification for Dielectric Overshoe Footwear,* 1998.

ASTM F 1236-01, *Standard Guide for Visual Inspection of Electrical Protective Rubber Products,* 2001.

ASTM F 1505, *Standard Specification for Insulated and Insulating Hand Tools,* 2001.

ASTM F 1506-02, *Standard Performance Specification for Textile Material for Wearing Apparel for Use by Electrical Workers Exposed to Momentary Electric Arc and Related Thermal Hazards,* 2002a.

ASTM F 1891-02, *Standard Specification for Arc and Flame Resistant Rainwear,* 2002a.

ASTM F 1958, *Standard Test Method for Determining the Ignitability of Non-Flame Resistant Materials for Clothing by Electric Arc Exposure Method Using Mannequins,* 1999.

ASTM F 1959, *Standard Test Method for Determining the Arc Thermal Performance Value of Materials for Clothing,* 1999.

ASTM F 2178-02, *Standard Test Method for Determining the Arc Rating of Face Protective Products,* 2002.

A.3.3 IEC Publications. International Electrotechnical Commission, 3, rue de Varembé, P.O. Box 131, CH-1211 Geneva 20, Switzerland.

479-1 Part 1 General aspects

479-1-1 Chapter 1: Electrical impedance of the human body

479-1-2 Chapter 2: Effects of ac in the range of 15 Hz to 100 Hz

479-2 Part 2: Special aspects

479-2-4: Chapter 4: Effects of ac with frequencies above 100 Hz

479-2-5 Chapter 5: Effects of special waveforms of current

479-2-6 Chapter 6: Effects of unidirectional single impulse currents of short duration

A.3.4 IRCP Publications. International Commission for Radiological Protection.

IRCP 15, *Protection Against Ionizing Radiation from External Sources*.

Copyright National Fire Protection Association
Provided by IHS under license with NFPA
No reproduction or networking permitted without license from IHS
Not for Resale

Annex B Informational References

B.1 Referenced Publications. The following documents or portions thereof are referenced within this standard for informational purposes only and are thus not part of the requirements of this document unless also listed in Annex A.

B.1.1 NFPA Publications. National Fire Protection Association, 1 Batterymarch Park, Quincy, MA 02169-7471.

NFPA 30, *Flammable and Combustible Liquids Code,* 2000 edition.

NFPA 58, *Liquefied Petroleum Gas Code,* 2001 edition.

NFPA 70, *National Electrical Code®,* 2002 edition.

NFPA 70B, *Recommended Practice for Electrical Equipment Maintenance,* 2002 edition.

NFPA 77, *Recommended Practice on Static Electricity,* 1993 edition.

NFPA 325, *Guide to Fire Hazard Properties of Flammable Liquids, Gases, and Volatile Solids,* 1994 edition (available in NFPA's *Fire Protection Guide to Hazardous Materials*).

NFPA 496, *Standard for Purged and Pressurized Enclosures for Electrical Equipment,* 1998 edition.

NFPA 497, *Recommended Practice for the Classification of Flammable Liquids, Gases or Vapors and of Hazardous (Classified) Locations for Electrical Installations in Chemical Process Areas,* 1997 edition.

NFPA 780, *Standard for the Installation of Lightning Protection Systems,* 2000 edition.

B.1.2 ANSI Publications. American National Standards Institute, 25 West 43rd Street, 4th Floor, New York, NY 10036.

ANSI/API RP 14F, *Design and Installation of Electrical Systems for Offshore Production Platforms,* 1991.

ANSI C2, *National Electrical Safety Code,* 2002.

ANSI/UL 2279, *Electrical Equipment for Use in Class I, Zone 0, 1, and 2 Hazardous (Classified) Locations,* 1997.

ANSI C84.1, *Electric Power Systems and Equipment — Voltage Ratings (60 Hz),* 1995.

ANSI Z535-4, *Product Signs and Safety Labels*.

B.1.3 Lee, Ralph, Life Fellow IEEE, "The Other Electrical Hazard: Electrical Arc Blast Burns," 1982.

B.1.4 U.S. Government Publication. Superintendent of Documents, U.S. Government Printing Office, Washington, DC 20402.

Title 29, *Code of Federal Regulations,* Parts 1926 and 1910.

OSHA 1926.403, *Battery Rooms and Battery Charging*

OSHA 1910.178(g), *Changing and Charging Batteries*

OSHA 1910.305(j)(7), *Storage Batteries*

B.1.5 ISA Publications. Electrical Apparatus for Use in Class I, Zone 1 Hazardous (Classified) Locations, Type of Protection — Oil-Immersion "o," ISA S12.26.01-1996

Electrical Apparatus for Use in Class I, Zone 1 Hazardous (Classified) Locations, Type of Protection — Increased Safety "e," ISA S12.16.01-1996

Electrical Apparatus for Use in Class I, Zone 1 Hazardous (classified) Locations, Type of Protection — Encapsulation "m," ISA S12.23.01-1996

Electrical Apparatus for Use in Class I, Zone 0, 1 Hazardous (Classified) Locations — General Requirements, ISA S12.0.01-1997

Electrical Apparatus for Use in Class I, Zone 1 and 2 Hazardous (Classified) Locations, Type of Protection — Flameproof "d," ISA S 12.22.01-1996

Electrical Apparatus for Explosive Gas Atmospheres, Classification of Hazardous Areas, IEC 79-10-1995

Recommended Practice for Classification of Locations for Electrical Installations at Petroleum Facilities Classified as Class I, Zone 0, Zone 1, or Zone 2, API RP 505-1997

Electrical Apparatus for Explosive Gas Atmospheres, Classifications of Hazardous (Classified) Locations, ISA S12.24.01-1997

Electrical Apparatus for Explosive Gas Atmospheres, Classifications of Hazardous (Classified) Locations, ISA S12.24.01-1997

Electrical Apparatus for Explosive Gas Atmospheres, Classifications of Hazardous (Classified) Locations, ISA S12.24.01-1997

B.1.6 IEC Publications. International Electrotechnical Commission, 3, rue de Varembé, P. O. Box 131, CH-1211 Geneva 20, Switzerland.

Electrical apparatus for explosive gas atmospheres, part 6 — oil immersion "o," IEC 79-6-1995

Electrical apparatus for explosive gas atmospheres, part 7 — increased safety "e," IEC 79-7-1990, Amendment No. 1 (1991) and Amendment No. 2 (1993)

Electrical apparatus for explosive gas atmospheres, part 18 — encapsulation "m," IEC 79-18-1992

Construction and verification test of flameproof enclosures of electrical apparatus, IEC 79-1A-1975, Amendment No. 1 (1993)

Spark-test apparatus for intinsically safe circuits, IEC 79-3-1990

Classification of mixtures of gases or vapors with air according to their maximum experimental safe gaps and minimum igniting currents, IEC 79-12-1978

Copyright National Fire Protection Association
Provided by IHS under license with NFPA
No reproduction or networking permitted without license from IHS
Not for Resale

Electrical apparatus for explosive gas atmospheres — part O — general requirements, IEC 79-0-1983, Amendment No. 1 (1987) and Amendment No. 2 (1991)

Electrical apparatus for explosive gas atmospheres, part 1 — construction and verification test of flameproof enclosures of electrical apparatus, IEC 79-1-1990, Amendment No. 1 (1993).

Electrical apparatus for explosive gas atmospheres, part 15 — electrical apparatus with type of protection "n," IEC 79-15-1987

Electrical apparatus for Explosive Gas Atmospheres — Part 2: Electrical Apparatus, Type of Protection "p," IEC 79-2-1983; and electrical apparatus for gas atmospheres, Part 13 — construction and use of rooms or buildings protected by pressurization, IEC 79-13-1982

Intrinsically Safe Apparatus and Associated Apparatus for Use in Class I, II, and III, Hazardous Locations, ANSI/UL 913-1997; Electrical apparatus for explosive gas atmospheres, part II — instrinsic safety "i," IEC 79-11-1991; and electrical apparatus for intrinsically safe circuits, IEC 79-3-1990

Electrical Apparatus for Use in Class I, Zone I Hazardous (Classified) Locations Type of Protection — Powder Filling "q," ISA S12.25.01-1996, and Electrical Apparatus for Explosive Gas Atmospheres — Part 5: Powder Filling, Type of Protection "q," IEC 79-5-1967

Electrical Apparatus for Explosive Gas Atmospheres — Part 14: Electrical Installations in Explosive Gas Atmospheres (Other than Mines), IEC 79-14-1996

Electrical Apparatus for Explosive Gas Atmospheres — Part 16: Artificial Ventilation for the Protection of Analyzer(s) Houses, IEC 79-16-1990

Electrical Apparatus for Explosive Gas Atmospheres, Data for Flammable Gases and Vapours, Relating to the Use of Electrical Apparatus, IEC 79-20-1996

Electrical Apparatus for Explosive Gas Atmospheres, Classification of Hazardous Areas, IEC 600 79-10-1995

B.1.7 IEEE Publications. Institute of Electrical and Electronic Engineers, 445 Hoes Lane, P. O. Box 1331, Piscataway, NJ 08855-1331.

IEEE Std 4, *Standard Techniques for High Voltage Testing,* 1978 (4th printing)

IEEE Std 463, *Standard for Electrical Safety Practices in Electrolytic Cell Line Work Zones,* 1993

IEEE Std 484, *Recommended Practice for Installation Design and Installation of Vented Lead-Acid Batteries for Stationary Applications,* 1996

IEEE Std 516, *Guide for Maintenance Methods on Energized Power Lines,* 2003

IEEE Std 937, *Recommended Practice for Installation and Maintenance of Lead-Acid Batteries for Photovoltaic Systems,* 1987 (R 1993)

IEEE Std 1187, *Recommended Practice for Installation Design and Installation of Valve-Regulated Lead-Acid Storage Batteries for Stationary Applications,* 1996

IEEE Std 1584, *Guide for Performing Arc Flash Calculations,* 2002

B.1.8 ISO Publications. International Standards Organization, 1, rue Varembé, Case postal 56, CH-1211 Geneva 20, Switzerland.

Metric Screw Threads, ISO 965/1:1980

Metric Screw Threads, ISO 965/3:1980

UL 943, *Standard for Ground-Fault Circuit Interrupters.*

B.1.9 Other Publications.

UL Technical Report No. 58 (1993)

API RP 500, *Recommended Practice for Classification of Locations for Electrical Installations at Petroleum Facilities Classified as Class I, Division 1 or Division 2,* 1997

API RP 505, *Classification of Locations for Electrical Installations at Petroleum Facilities Classified as Class I, Zone 0, Zone 1, or Zone 2,* 1997

API RP 2003, *Protection Against Ignitions Arising Out of Static Lightning and Stray Currents,* 1991

Area Classification Code for Petroleum Installations, Model Code — Part 15, Institute for Petroleum

API RP 505, *Classification of Locations for Electrical Installations at Petroleum Facilities Classified as Class I, Zone 0, Zone 1, or Zone 2,* 1997

Model Code of Safe Practice in the Petroleum Industry, Part 15 — Area Classification Code for Petroleum Installations, IP 15, The Institute of Petroleum, London

Copyright National Fire Protection Association
Provided by IHS under license with NFPA
No reproduction or networking permitted without license from IHS
Not for Resale

Annex C Limits of Approach

This annex is not a part of the requirements of this NFPA document but is included for informational purposes only.

C.1 Preparation for Approach. Observing a safe approach distance from exposed energized electrical conductors or circuit parts is an effective means of maintaining electrical safety. As the distance between a person and the exposed energized conductors or circuit parts decreases, the potential for electrical accident increases.

C.1.1 Unqualified Persons, Safe Approach Distance. Unqualified persons are safe when they maintain a distance from the exposed energized conductors or circuit parts, including the longest conductive object being handled, so that they cannot contact or enter a specified air insulation distance to the exposed energized electrical conductors or circuit parts. This safe approach distance is the Limited Approach Boundary. Further, persons must not cross the Flash Protection Boundary unless they are wearing appropriate personal protective clothing and are under the close supervision of a qualified person. Only when continuously escorted by a qualified person may an unqualified person cross the Limited Approach Boundary. Under no circumstance may an unqualified person cross the Restricted Approach Boundary, where special shock protection techniques and equipment are required.

C.1.2 Qualified Persons, Safe Approach Distance.

C.1.2.1 Determine the Flash Protection Boundary and, if the boundary is to be crossed, appropriate flash-flame protection equipment must be utilized.

C.1.2.2 For a person to cross the Limited Approach Boundary and enter the limited space, he or she must be qualified to perform the job/task.

C.1.2.3 To cross the Restricted Approach Boundary and enter the restricted space, qualified persons must do the following:

(1) Have a plan that is documented and approved by authorized management
(2) Use personal protective equipment that is appropriate for working near exposed energized conductors or circuit parts and is rated for the voltage and energy level involved
(3) Be certain that no part of the body enters the prohibited space
(4) Minimize the risk from inadvertent movement by keeping as much of the body out of the restricted space as possible, using only protected body parts in the space as necessary to accomplish the work

C.1.2.4 Crossing the Prohibited Approach Boundary and entering the prohibited space is considered the same as making contact with exposed energized conductors or circuit parts. See Figure C.1.2.4. Therefore, qualified persons must do the following:

(1) Have specified training to work on energized conductors or circuit parts
(2) Have a documented plan justifying the need to work that close
(3) Perform a risk analysis
(4) Have (2) and (3) approved by authorized management
(5) Use personal protective equipment that is appropriate for working on exposed energized conductors or circuit parts and is rated for the voltage and energy level involved

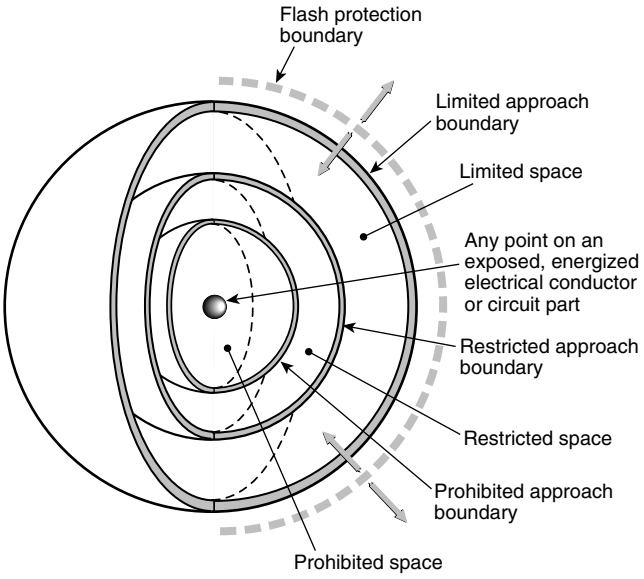

Figure C.1.2.4 Limits of Approach.

C.2 Basis for Distance Values in Table 130.2(B).

C.2.1 General Statement. Columns 1 through 5 of Table 130.2(C) show various distances from the exposed energized electrical conductors or circuit parts. They include dimensions that are added to a basic minimum air insulation distance. Those basic minimum air insulation distances for voltages 72.5 kV and under are based on ANSI/IEEE 4-1978 4th Printing, *Standard Techniques for High-Voltage Testing,* Appendix 2B; and voltages over 72.5 kV are based on ANSI/IEEE 516-2003, *Guide for Maintenance Methods*

Copyright National Fire Protection Association
Provided by IHS under license with NFPA
No reproduction or networking permitted without license from IHS
Not for Resale

on Energized Power Lines. The minimum air insulation distances that are required to avoid flashover are as follows:

(1) ≤300 V: 1 mm (0 ft 0.03 in.)
(2) >300 V ≤750 V: 2 mm (0 ft 0.07 in.)
(3) >750 V ≤2 kV: 5 mm (0 ft 0.19 in.)
(4) >2 kV ≤15 kV: 39 mm (0 ft 1.5 in.)
(5) >15 kV ≤36 kV: 161 mm (0 ft 6.3 in.)
(6) >36 kV ≤48.3 kV: 254 mm (0 ft 10.0 in.)
(7) >48.3 kV ≤72.5 kV: 381 mm (1 ft 3.0 in.)
(8) >72.5 kV ≤121 kV: 640 mm (2 ft 1.2 in.)
(9) >138 kV ≤145 kV: 778 mm (2 ft 6.6 in.)
(10) >161 kV ≤169 kV: 915 mm (3 ft 0.0 in.)
(11) >230 kV ≤242 kV: 1.281 m (4 ft 2.4 in.)
(12) >345 kV ≤362 kV: 2.282 m (7 ft 5.8 in.)
(13) >500 kV ≤550 kV: 3.112 m (10 ft 2.5 in.)
(14) >765 kV ≤800 kV: 4.225 m (13 ft 10.3 in.)

C.2.1.1 Column 1. The voltage ranges have been selected to group voltages that require similar approach distances based on the sum of the electrical withstand distance and an inadvertent movement factor. The value of the upper limit for a range is the maximum voltage for highest nominal voltage in the range, based on ANSI C84.1-1995, *Electric Power Systems and Equipment (60 Hz).* For single-phase systems, select the range that is equal to the system's maximum phase-to-ground voltage times 1.732.

C.2.1.2 Column 2. The distances in this column are based on OSHA's rule for unqualified persons to maintain a 3.05-m (10-ft) clearance for all voltages up to 50 kV (voltage-to-ground), plus 102 mm (4.0 in.) for each 1 kV over 50 kV.

C.2.1.3 Column 3. The distances are based on the following:

(1) ≤750 V: Use *NEC* Table 110.26(A)(1), Working Spaces, Condition 2 for 151 V–600 V range.
(2) >750 V ≤145 kV: Use *NEC* Table 110.34(A), Working Space, Condition 2.
(3) >145 kV: Use OSHA's 3.05-m (10-ft) rules as used in Column 2.

C.2.1.4 Column 4. The distances are based on adding to the flashover dimensions shown above the following inadvertent movement distance:

≤300 V: Avoid contact.

Based on experience and precautions for household 120/240 V systems:

>300 V ≤750 V: Add 304.8 mm (1 ft 0 in.) inadvertent movement.

These values have been found to be adequate over years of use in ANSI C2, *National Electrical Safety Code,* in the approach distances for communication workers.

>72.5 kV: Add 304.8 mm (1 ft 0 in.) for inadvertent movement.

These values have been found to be adequate over years of use in the *National Electrical Safety Code* in the approach distances for supply workers.

C.2.1.5 Column 5. The distances are based on the following:

(1) ≤300 V: Avoid contact.
(2) >300 ≤750 V: Use *NEC* Table 230.51(C), Clearances.

Between open conductors and surfaces, 600 V not exposed to weather.

(1) >750 V ≤2.0 kV: Select value that fits in with adjacent values.
(2) >2 kV ≤72.5 kV: Use *NEC* Table 490.24, Minimum Clearance of Live Parts, outdoor phase-to-ground values.
(3) >72.5 kV: Add 152.4 mm (0 ft 6 in.) for inadvertent movement.

These values have been found to be adequate over years of use where there has been a hazard/risk analysis, either formal or informal, of a special work procedure that allows a closer approach than that permitted by the Restricted Approach Boundary distance.

Copyright National Fire Protection Association
Provided by IHS under license with NFPA
No reproduction or networking permitted without license from IHS
Not for Resale

Annex D Sample Calculation of Flash Protection Boundary

This annex is not a part of the requirements of this NFPA document but is included for informational purposes only.

D.1 Introduction. Existing knowledge about arc flash exposure at voltage levels above 600 volts is limited. Other methods of calculating such exposure exist and may be used. Commercial and shareware programs are available for calculating these values. It is important to investigate the limitations of any programs to be used. For example, some programs only calculate for single phase conditions, while others have current limitations.

The following example is conservative at voltage levels above 600 volts. Experience suggests that the example is conservative and becomes more conservative as the voltage increases. It should be noted that all present methods of calculating incident energy at higher voltage levels have limitations.

See 130.3 for requirements for flash hazard analysis.

D.2 Development of Arc Energy and Temperature Rise on a Person's Exposed Skin. The following sections provide an explanation of the development of the arc energy and temperature rise on a person's exposed skin due to various strengths of electrical arc blasts at various distances from the involved person. The formulas used in this explanation are from Ralph Lee's paper "The Other Electrical Hazard: Electrical Arc Blast Burns," *IEEE Trans. Industrial Applications*, Vol 1A-18. No. 3, Page 246, May/June 1982. The calculations are based on the worst-case arc impedance. See Table D.2.

D.3 Basic Equations for Calculating Flash Protection Boundary Distances. The short-circuit symmetrical ampacity from a bolted 3-phase fault at the transformer terminals is calculated with the following formula:

$$I_{sc} = \left\{\left[MVA \text{ Base } \times 10^6\right] \div \left[1.732 \times V\right]\right\} \times \{100 \div \%Z\} \quad \textbf{[D.3(a)]}$$

where I_{sc} is in amperes, V is in volts, and $\%Z$ is based on the transformer MVA.

A typical value for the maximum power (in MW) in a 3-phase arc can be calculated using the following formula:

$$P = \left[\text{maximum bolted fault in } MVA_{bf}\right] \times 0.707^2 \quad \textbf{[D.3(b)]}$$

The Flash Protection Boundary distance is calculated in accordance with the following formulae:

$$P = 1.732 \times V \times I_{sc} \times 10^{-6} \times 0.707^2 \quad \textbf{[D.3(c)]}$$

$$D_c = \left[2.65 \times MVA_{bf} \times t\right]^{1/2} \quad \textbf{[D.3(d)]}$$

Table D.2 Flash Burn Hazards at Various Levels in a Large Petrochemical Plant

(1)	(2)	(3)	(4)	(5)	(6)	(7)	(8)
Bus Nominal Voltage Levels	**System (MVA)**	**Transformer (MVA)**	**System or Transformer (% Z)**	**Short Circuit Symmetrical (Amperes)**	**Arc (MW)**	**Clearing Time of Fault (Cycles)**	**Flash Protection Boundary Typical Distance[1]**
230 kV	9000		1.11	23,000	4000	6.0	14.03 m (46.0 ft)
13.8 kV	750		9.4	31,300	374	6.0	4.3 m (14.1 ft)
Load side of all 13.8 kV fuses	750		9.4	31,300	374	1.0	1.77 m (5.8 ft)
4.16 kV		10.0	5.5	25,000	91	6.0	2.23 m (7.3 ft)
4.16 kV		5.0	5.5	12,600	45	6.0	1.68 m (5.5 ft)
Line side of incoming 600 V fuse		2.5	5.5	44,000	23	6.0	1.13 m (3.7 ft)
600 V bus		2.5	5.5	44,000	23	0.25	225.6 mm (0.74 ft)
600 V bus		1.5	5.5	26,000	27	6.0	853.5 mm (2.8 ft)
600 V bus		1.0	5.57	17,000	17	6.0	702 mm (2.3 ft)

[1]Distance from an open arc to limit skin damage to a curable second-degree skin burn [less than 80°C (176°F) on skin] in free air.

Copyright National Fire Protection Association
Provided by IHS under license with NFPA
No reproduction or networking permitted without license from IHS
Not for Resale

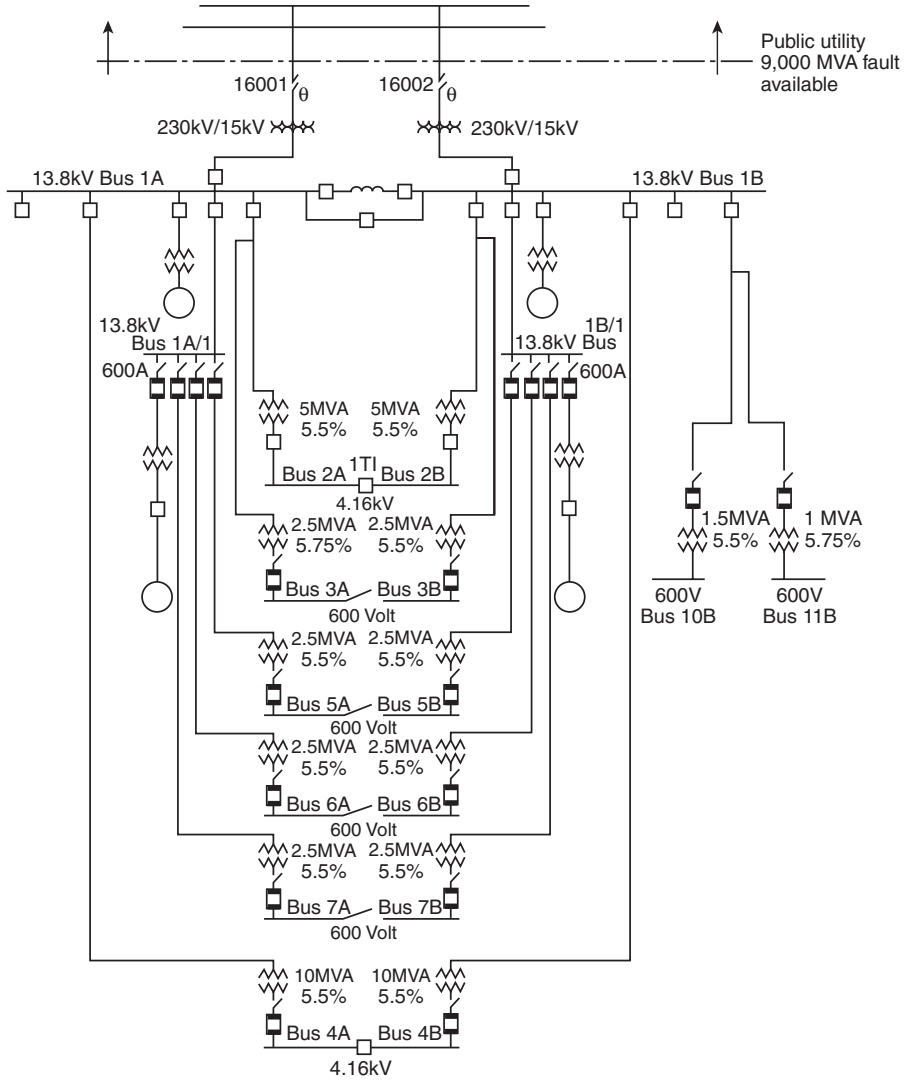

Figure D.4 Single Line Diagram of a Typical Petrochemical Complex.

$$D_c = [53 \times MVA \times t]^{1/2} \qquad \textbf{[D.3(e)]}$$

where:

D_c = distance in feet of person from arc source for a just curable burn (i.e., skin temperature remains less than 80 degrees)

MVA_{bf} = bolted fault *MVA* at point involved

MVA = *MVA* rating of transformer. For transformers with *MVA* ratings below 0.75 *MVA*, multiply the transformer *MVA* rating by 1.25.

t = time of arc exposure in seconds

The clearing time for a current limiting fuse is approximately ¼ cycle or 0.004 second. The clearing time of a 5 kV and 15 kV circuit breaker is approximately 0.1 second or 6 cycles. This can be broken down as follows: actual breaker time (approximately 2.0 cycles), plus relay operating time of approximately 1.74 cycles, plus an additional safety margin of 2 cycles, giving a total time of approximately 6 cycles.

D.4 Single Line Diagram of a Typical Petrochemical Complex. The single line diagram *(see Figure D.4)* illustrates the complexity of a distribution system in a typical petrochemical plant.

D.5 Sample Calculation. Many of the electrical characteristics of the systems and equipment are provided in Table D.2. The sample calculation is made on the 4160-volt bus 4A or 4B. Table D.2 tabulates the results of calculating the

Copyright National Fire Protection Association
Provided by IHS under license with NFPA
No reproduction or networking permitted without license from IHS
Not for Resale

Flash Protection Boundary for each part of the system. For this calculation, based on Table D.2, the following results are obtained:

(1) Calculation is made on a 4160-volt bus.
(2) Transformer MVA (and base *MVA*) = 10 MVA.
(3) Transformer impedance on 10 *MVA* base = 5.5 percent.
(4) Circuit breaker clearing time = 6 cycles.

Using Equation D.3(a), calculate the short-circuit current:

$$\begin{aligned} I_{sc} &= \left\{\left[MVA \text{ Base} \times 10^6\right] \div \left[1.732 \times V\right]\right\} \times \left\{100 \div \%Z\right\} \\ &= \left\{\left[10 \times 10^6\right] \div \left[1.732 \times 4160\right]\right\} \times \left\{100 \div 5.5\right\} \\ &= 25{,}000 \text{ amperes} \end{aligned}$$

Using Equation D.3(b), calculate the power in the arc:

$$\begin{aligned} P &= 1.732 \times 4160 \times 25{,}000 \times 10^{-6} \times 0.707^2 \\ &= 91 \text{ MW} \end{aligned}$$

Using the Equation D.3(d), calculate the second-degree burn distance:

$$\begin{aligned} D_c &= \left\{2.65 \times \left[1.732 \times 25{,}000 \times 4160 \times 10^{-6}\right] \times 0.1\right\}^{1/2} \\ &= 6.9 \text{ or } 7.00 \text{ ft} \end{aligned}$$

Or, using Equation D.3(e), calculate the second-degree burn distance using an alternative method:

$$\begin{aligned} D_c &= \left[53 \times 10 \times 0.1\right]^{1/2} \\ &= 7.28 \text{ ft} \end{aligned}$$

D.6 Calculation of Incident Energy Exposure for a Flash Hazard Analysis. The following equations can be used to predict the incident energy produced by a three-phase arc on systems rated 600 volts and below. The results of these equations might not represent the worst case in all situations. It is essential that the equations be used only within the limitations indicated in the definitions of the variables shown under the equations. The equations must be used only under qualified engineering supervision. (Note: Experimental testing continues to be performed to validate existing incident energy calculations and to determine new formulas.)

The parameters required to make the calculations follows:

(1) The maximum "bolted fault" three-phase short-circuit current available at the equipment and the minimum fault level at which the arc will self-sustain (Calculations should be made using the maximum value, and then at lowest fault level at which the arc is self-sustaining. For 480-volt systems, the industry accepted minimum level for a sustaining arcing fault is 38 percent of the available "bolted fault" three-phase short-circuit current. The highest incident energy exposure could occur at these lower levels where the overcurrent device could take seconds or minutes to open.)
(2) The total protective device clearing time (upstream of the perspective arc location) at the maximum short-circuit current, and at the minimum fault level at which the arc will sustain itself.
(3) The distance of the worker from the prospective arc for the task to be performed.

D.6.1 Arc in Open Air. The estimated incident energy for an arc in open air is

$$E_{MA} = 5271 D_A^{-1.9593} t_A \left[0.0016F^2 - 0.0076F + 0.8938\right] \quad \textbf{[D.6.1(a)]}$$

where:

E_{MA} = maximum open arc incident energy, cal/cm^2
D_A = distance from arc electrodes, in. (for distances 18 in. and greater)
t_A = arc duration, seconds
F = short-circuit current, kA (for the range of 16 kA to 50 kA)

Using Equation D.6.1(a), calculate the maximum open arc incident energy, cal/cm^2, where D_A = 18 in., t_A = 0.2 second, and F = 20 kA.

$$\begin{aligned} E_{MA} &= 5271\, D_A^{-1.9593} t_A \left[0.0016F^2 - 0.0076F + 0.8938\right] \quad \textbf{[D.6.1(b)]} \\ &= 5271 \times .0035 \times 0.2 \left[0.0016 \times 400 - 0.0076 \times 20 + 0.8938\right] \\ &= 3.69 \times \left[1.381\right] \\ &= 21.33 \text{ J/cm}^2 \left(5.098 \text{ cal/cm}^2\right) \end{aligned}$$

D.6.2 Arc in a Cubic Box. The estimated incident energy for an arc in a cubic box (20 in. on each side, open on one end) is given in the following equation. This equation is applicable to arc flashes emanating from within switchgear, motor control centers, or other electrical equipment enclosures.

$$E_{MB} = 1038.7 D_B^{-1.4738} t_A \left[0.0093F^2 - 0.3453F + 5.9675\right] \quad \textbf{[D.6.2(a)]}$$

where:

E_{MB} = maximum 20 in. cubic box incident energy, cal/cm^2
D_B = distance from arc electrodes, inches (for distances 18 in. and greater)
t_A = arc duration, seconds
F = short circuit current, kA (for the range of 16 kA to 50 kA)

Copyright National Fire Protection Association
Provided by IHS under license with NFPA
No reproduction or networking permitted without license from IHS
Not for Resale

Sample Calculation: Using Equation D.6.2, calculate the maximum 20 in. cubic box incident energy, cal/cm^2, using the following:

(1) D_A = 18 in.
(2) t_A = 0.2 second
(3) F = 20 kA

$$E_{MB} = 1038.7 D_B^{-1.4738} t_A \left[0.0093F^2 - 0.3453F + 5.9675\right] \quad \textbf{[D.6.2(b)]}$$
$$= 1038 \times 0.0141 \times 0.2\left[0.0093 \times 400 - 0.3453 \times 20 + 5.9675\right]$$
$$= 2.928 \times [2.7815]$$
$$= 34.1\ \text{J/cm}^2 \left(8.144\ \text{cal/cm}^2\right)$$

D.6.3 Reference. The equations for this section were derived in the IEEE paper by R. L. Doughty, T. E. Neal, and H. L. Floyd, II, "Predicting Incident Energy to Better Manage the Electric Arc Hazard on 600 V Power Distribution Systems," *Record of Conference Papers IEEE IAS 45th Annual Petroleum and Chemical Industry Conference,* September 28-30, 1998.

D.7 Calculation of Incident Energy Exposure Greater Than 600 V for a Flash Hazard Analysis. The following equation can be used to predict the incident energy produced by a three-phase arc in open air on systems rated above 600 V. The parameters required to make the calculations are as follows:

(1) The maximum "bolted fault" three-phase short circuit current available at the equipment
(2) The total protective device clearing time (upstream of the prospective arc location) at the maximum short circuit current
(3) The distance from the arc source
(4) Rated phase-to-phase voltage of the system:

$$E = \frac{793 \times F \times V \times t_A}{D^2}$$

where:
E = incident energy, cal/cm^2
F = bolted fault short circuit current, kA
V = system phase-to-phase voltage, kV
t_A = arc duration, seconds
D = distance from the arc source, inches

D.8 Basic Equations for Calculating Incident Energy and Flash Protection Boundary. This section offers equations for estimating incident energy and Flash Protection Boundaries based on statistical analysis and curve fitting of available test data. An IEEE working group produced the data from tests it performed to produce models of incident energy. Based on the selection of standard personal protective equipment (PPE) levels (1.2, 8, 25, and 40 cal/cm^2), it is estimated that the PPE is adequate or more than adequate to protect employees from second-degree burns in 95 percent of the cases.

FPN: When incident energy exceeds 40 cal/cm^2 at the working distance, greater emphasis than normal should be placed on de-energizing before working on or near the exposed electrical conductors or circuit parts.

The complete data, including a spreadsheet calculator to solve the equations, can be found in the *IEEE Guide for Performing Arc Flash Hazard Calculations* (IEEE Std 1584™-2002). It can be ordered from the Institute of Electrical and Electronics Engineers, Inc., 3 Park Avenue, New York, NY 10016-5997.

D.8.1 System Limits. An equation for calculating incident energy can be empirically derived using statistical analysis of raw data along with a curve-fitting algorithm. It can be used for systems with the following limits:

(1) 0.208 kV to 15 kV, three-phase
(2) 50 Hz to 60 Hz
(3) 700 A to 106,000 A available short-circuit current
(4) 13 mm to 152 mm conductor gaps

For three-phase systems in open-air substations, open-air transmission systems, and distribution systems, a theoretically derived model is available. This theoretically derived model is intended for use with applications where faults escalate to three-phase faults. Where such an escalation is not possible or likely or where single-phase systems are encountered, this equation will likely provide conservative results.

D.8.2 Arcing Current. To determine the operating time for protective devices, find the predicted three-phase arcing current.

For applications with a system voltage under 1 kV, solve Equation D.8.2(a):

$$\lg I_a = K + 0.662 \lg I_{bf} + 0.0966V + 0.000526G + \quad \textbf{[D.8.2(a)]}$$
$$0.5588V\left(\lg I_{bf}\right) - 0.00304G\left(\lg I_{bf}\right)$$

where:
lg = the $\log_{10}$
I_a = arcing current in kA
K = –0.153 for open air arcs; –0.097 for arcs-in-a-box
I_{bf} = bolted three-phase available short-circuit current (symmetrical rms) (kA)
V = system voltage in kV
G = conductor gap (mm) (See Table D.8.2.)

Copyright National Fire Protection Association
Provided by IHS under license with NFPA
No reproduction or networking permitted without license from IHS
Not for Resale

For systems greater than or equal to 1 kV, use Equation D.8.2(b):

$$\lg I_a = 0.00402 + 0.983 \lg I_{bf} \qquad \textbf{[D.8.2(b)]}$$

This higher voltage formula is utilized for both open-air arcs and for arcs-in-a-box.

Convert from lg:

$$I_a = 10^{\lg I_a} \qquad \textbf{[D.8.2(c)]}$$

Use $0.85I_a$ to find a second arcing time. This second arc current accounts for variations in the arcing current and the time for the overcurrent device to open. Calculate the incident energy using both values (I_a and 0.85 I_a), and use the higher value.

Table D.8.2 Factors for Equipment and Voltage Classes

System Voltage (kV)	Type of Equipment	Typical Conductor Gap (mm)	Distance X-Factor
0.208–1	Open-air	10–40	2.000
	Switchgear	32	1.473
	MCCs and panels	25	1.641
	Cables	13	2.000
>1–5	Open-air	102	2.000
	Switchgear	13–102	0.973
	Cables	13	2.000
>5–15	Open-air	13–153	2.000
	Switchgear	153	0.973
	Cables	13	2.000

D.8.3 Incident Energy at Working Distance—Empirically Derived Equation. To determine the incident energy using the empirically derived equation, determine the $\log_{10}$ of the normalized incident energy. This equation is based on data normalized for an arc time of 0.2 second and a distance from the possible arc point to the person of 610 mm:

$$\lg E_n = k_1 + k_2 + 1.081 \lg I_a = 0.0011G \qquad \textbf{[D.8.3(a)]}$$

where:

E_n = incident energy (J/cm^2) normalized for time and distance
k_1 = –0.792 for open air arcs; –0.555 for arcs-in-a-box
k_2 = 0 for ungrounded and high-resistance grounded systems
= –0.113 for grounded systems
G = the conductor gap (mm) (See Table D.8.2.)

Then,

$$E_n = 10^{\lg E_n} \qquad \textbf{[D.8.3(b)]}$$

Converting from normalized:

$$E = 4.184 C_f E_n \left(\frac{t}{0.2}\right)\left(\frac{610^x}{D^x}\right) \qquad \textbf{[D.8.3(c)]}$$

where:

E = incident energy in J/cm^2
C_f = calculation factor
= 1.0 for voltages above 1 kV
= 1.5 for voltages at or below 1 kV
E_n = incident energy normalized
t = arcing time (seconds)
D = distance (mm) from the arc to the person (working distance)
X = the distance exponent from Table D.8.2

D.8.4 Incident Energy at Working Distance—Theoretical Equation. The theoretically derived equation can be applied in cases where the voltage is over 15 kV or the gap is outside the range:

$$E = 2.142 \times 10^6 V I_{bf} \left(\frac{t}{D^2}\right) \qquad \textbf{(D.8.4)}$$

where:

E = incident energy (J/cm^2)
V = system voltage (kV)
t = arcing time (seconds)
D = distance (mm) from the arc to the person (working distance)
I_{bf} = available three-phase bolted-fault current

For voltages over 15 kV, arcing-fault current and bolted-fault current are considered equal.

D.8.5 Flash Protection Boundary. The Flash Protection Boundary is the distance at which a person is likely to receive a second-degree burn. The onset of a second-degree burn is assumed to be when the skin receives 5.0 J/cm^2 of incident energy.

For the empirically derived equation,

$$D_B = \left[4.184 C_f E_n \left(\frac{t}{0.2}\right)\left(\frac{610^x}{E_B}\right)\right]^{\frac{1}{x}} \qquad \textbf{[D.8.5(a)]}$$

Copyright National Fire Protection Association
Provided by IHS under license with NFPA
No reproduction or networking permitted without license from IHS
Not for Resale

For the theoretically derived equation:

$$D_B = \sqrt{2.142 \times 10^6 V I_{bf} \left(\frac{t}{E_B} \right)} \quad \textbf{[D.8.5(b)]}$$

where:

D_B = the distance (mm) of the Flash Protection Boundary from the arcing point
C_f = a calculation factor
= 1.0 for voltages above 1 kV
= 1.5 for voltages at or below 1 kV
E_n = incident energy normalized
E_B = incident energy in J/cm^2 at the distance of the Flash Protection Boundary
t = time (seconds)
X = the distance exponent from Table 10.8.2
I_{bf} = bolted three phase available short-circuit current
V = system voltage in kV

FPN: These equations could be used to determine whether selected PPE is adequate to prevent thermal injury at a specified distance in event of an arc flash.

D.8.6 Current-Limiting Fuses. The formulas in this section were developed for calculating arc-flash energies for use with current-limiting Class L and Class RK1 fuses. The testing was done at 600 volts and at a distance of 455 mm, using commercially available fuses from one manufacturer. The following variables are noted:

I_{bf} = available three-phase bolted-fault current (symmetrical rms) (kA)
E = incident energy (J/cm^2)

(A) Class L Fuses 1,601 A–2,000 A. Where I_{bf} <22.6 kA, calculate the arcing current using Equation D.8.2(a), and use time-current curves to determine the incident energy using Equations D.8.3(a), D.8.3(b), and D.8.3(c).

Where 22.6 kA ≤I_{bf} ≤65.9 kA.

$$E = 4.184\left(-0.1284 I_{bf} + 32.262\right) \quad \textbf{[D.8.6(a)]}$$

Where 65.9 kA < I_{bf} ≤106 kA.

$$E = 4.184\left(-0.5177 I_{bf} + 57.917\right) \quad \textbf{[D.8.6(b)]}$$

Where I_{bf} >106 kA, contact manufacturer.

(B) Class L Fuses 1,201 A–1,600 A. Where I_{bf} <15.7 kA, calculate the arcing current using Equation D.8.2(a), and use time-current curves to determine the incident energy using Equations D.8.3(a), D.8.3(b), and D.8.3(c).

Where 15.7 kA ≤I_{bf} ≤31.8 kA.

$$E = 4.184\left(-0.1863 I_{bf} + 27.926\right) \quad \textbf{[D.8.6(c)]}$$

Where 31.8 kA <I_{bf} <44.1 kA.

$$E = 4.184\left(-1.5504 I_{bf} + 71.303\right) \quad \textbf{[D.8.6(d)]}$$

Where 44.1 kA ≤I_{bf} ≤65.9 kA.

$$E = 12.3\,\text{J/cm}^2 \left(2.94\ \text{cal/cm}^2\right) \quad \textbf{[D.8.6(e)]}$$

Where 65.9 kA <I_{bf} ≤106 kA.

$$E = 4.184\left(-0.0631 I_{bf} + 7.0878\right) \quad \textbf{[D.8.6(f)]}$$

Where I_{bf} >106 kA, contact manufacturer.

(C) Class L Fuses 801 A–1,200 A. Where I_{bf} <15.7 kA, calculate the arcing current per Equation D.8.2(a), and use time-current curves to determine the incident energy per Equations D.8.3(a), D.8.3(b), and D.8.3(c).

Where 15.7 kA ≤I_{bf} ≤22.6 kA.

$$E = 4.184\left(-0.1928 I_{bf} + 14.226\right) \quad \textbf{[D.8.6(g)]}$$

Where 22.6 kA <I_{bf} ≤44.1 kA.

$$E = 4.184\left(0.0143 I_{bf}^{\ 2} - 1.3919 I_{bf} + 34.045\right) \quad \textbf{[D.8.6(h)]}$$

Where 44.1 kA <I_{bf} ≤106 kA.

$$E = 1.63 \quad \textbf{[D.8.6(i)]}$$

Where I_{bf} >106 kA, contact manufacturer.

(D) Class L Fuses 601 A–800 A. Where I_{bf} <15.7 kA, calculate the arcing current per Equation D.8.2(a), and use time-current curves to determine the incident energy using Equations D.8.3(a), D.8.3(b), and D.8.3(c).

Where 15.7 kA ≤I_{bf} ≤44.1 kA.

$$E = 4.184\left(-0.0601 I_{bf} + 2.8992\right) \quad \textbf{[D.8.6(j)]}$$

Copyright National Fire Protection Association
Provided by IHS under license with NFPA
No reproduction or networking permitted without license from IHS
Not for Resale

Where 44.1 kA < I_{bf} ≤106 kA.

$$E = 1.046 \quad \textbf{[D.8.6(k)]}$$

Where I_{bf} > 106 kA, contact manufacturer.

(E) Class RK1 Fuses 401 A–600 A. Where I_{bf} <8.5 kA, calculate the arcing current using Equation D.8.2(a), and use time-current curves to determine the incident energy using Equations D.8.3(a), D.8.3(b), and D.8.3(c).

Where 8.5 kA ≤I_{bf} ≤14 kA.

$$E = 4.184\left(-3.0545I_{bf} + 43.364\right) \quad \textbf{[D.8.6(l)]}$$

Where 14 kA < I_{bf} ≤15.7 kA.

$$E = 2.510 \quad \textbf{[D.8.6(m)]}$$

Where 15.7 kA < I_{bf} ≤22.6 kA.

$$E = 4.184\left(-0.0507I_{bf} + 1.3964\right) \quad \textbf{[D.8.6(n)]}$$

Where 22.6 kA < I_{bf} ≤106 kA.

$$E = 1.046 \quad \textbf{[D.8.6(o)]}$$

Where I_{bf} >106 kA, contact manufacturer.

(F) Class RK1 Fuses 201 A–400 A. Where I_{bf} <3.16 kA, calculate the arcing current using Equation D.8.2(a), and use time-current curves to determine the incident energy using Equations D.8.3(a), D.8.3(b), and D.8.3(c).

Where 3.16 kA ≤I_{bf} ≤5.04 kA.

$$E = 4.184\left(-19.053I_{bf} + 96.808\right) \quad \textbf{[D.8.6(p)]}$$

Where 5.04 kA < I_{bf}≤22.6 kA.

$$E = 4.184\left(-0.0302I_{bf} + 0.9321\right) \quad \textbf{[D.8.6(q)]}$$

Where 22.6 kA <I_{bf}≤106 kA.

$$E = 1.046 \quad \textbf{[D.8.6(r)]}$$

Where I_{bf} >106 kA, contact manufacturer.

(G) Class RK1 Fuses 101 A–200 A. Where I_{bf} <1.16 kA, calculate the arcing current using Equation D.8.2(a), and use time-current curves to determine the incident energy using Equations D.8.3(a), D.8.3(b), and D.8.3(c).

Where 1.16 kA ≤I_{bf} ≤1.6 kA.

$$E = 4.184\left(-18.409I_{bf} + 36.355\right) \quad \textbf{[D.8.6(s)]}$$

Where 1.6 kA < I_{bf} ≤3.16 kA.

$$E = 4.184\left(-4.2628I_{bf} + 13.721\right) \quad \textbf{[D.8.6(t)]}$$

Where 3.16 kA <I_{bf} ≤106 kA.

$$E = 1.046 \quad \textbf{[D.8.6(u)]}$$

Where I_{bf} > 106 kA, contact manufacturer.

(H) Class RK1 Fuses 1 A–100 A. Where I_{bf} <0.65 kA, calculate the arcing current per Equation D.8.2(a), and use time-current curves to determine the incident energy using Equations D.8.3(a), D.8.3(b), and D.8.3(c).

Where 0.65 kA ≤I_{bf} ≤1.16 kA.

$$E = 4.184\left(-11.176I_{bf} + 13.565\right) \quad \textbf{[D.8.6(v)]}$$

Where 1.16 kA < I_{bf} ≤1.4 kA.

$$E = 4.184\left(-1.4583I_{bf} + 2.2917\right) \quad \textbf{[D.8.6(w)]}$$

Where 1.4 kA < I_{bf} ≤106 kA.

$$E = 1.046 \quad \textbf{[D.8.6(x)]}$$

Where I_{bf} > 106 kA, contact manufacturer.

D.8.7 Low-Voltage Circuit Breakers. The equations in Table D.8.7 can be used for systems with low-voltage circuit breakers. The results of the equations will determine the incident energy and Flash Protection Boundary when I_{bf} is within the range as described. Time-current curves for the circuit breaker are not necessary within the appropriate range.

When the bolted-fault current is below the range indicated, calculate the arcing current per Equation D.8.2(a), and use time-current curves to determine the incident energy using Equations D.8.3(a), D.8.3(b), and D.8.3(c).

Copyright National Fire Protection Association
Provided by IHS under license with NFPA
No reproduction or networking permitted without license from IHS
Not for Resale

Table D.8.7 Incident Energy and Flash-Protection Boundary by Circuit Breaker Type and Rating

			480 V and Lower		575–600 V	
Rating (A)	**Breaker Type**	**Trip-Unit Type**	**Incident Energy (J/cm^2)[a]**	**Flash Boundary (mm)**	**Incident Energy (J/cm^2)**	**Flash Boundary (mm)**
100–400	MCCB	TM or M	0.189 I_{bf} + 0.548	9.16 I_{bf} + 194	0.271 I_{bf} + 0.180	11.8 I_{bf} + 196
600–1,200	MCCB	TM or M	0.223 I_{bf} + 1.590	8.45 I_{bf} + 364	0.335 I_{bf} + 0.380	11.4 I_{bf} + 369
600–1,200	MCCB	E, LI	0.377 I_{bf} + 1.360	12.50 I_{bf} + 428	0.468 I_{bf} + 4.600	14.3 I_{bf} + 568
1,600–6,000	MCCB or ICCB	TM or E, LI	0.448 I_{bf} + 3.000	11.10 I_{bf} + 696	0.686 I_{bf} + 0.165	16.7 I_{bf} + 606
800–6,300	LVPCB	E, LI	0.636 I_{bf} + 3.670	14.50 I_{bf} + 786	0.958 I_{bf} + 0.292	19.1 I_{bf} + 864
800–6,300	LVPCB	E, LS[b]	4.560 I_{bf} + 27.230	47.20 I_{bf} + 2660	6.860 I_{bf} + 2.170	62.4 I_{bf} + 2930

[a] I_{bf} is in kA; working distance is 455 mm (18 in.).
[b]Short-time delay is assumed to be set at maximum.
MCCB = Molded-case circuit breaker
ICCB = Insulated-case circuit breaker
LVPC = Low-voltage power circuit breaker
TM = Thermal-magnetic trip units
M = Magnetic (instantaneous only) trip units
E = Electronic trip units have three characteristics that may be used separately or in combination:
L = Long-time, S = Short-time, I = Instantaneous.

The range of available three-phase bolted-fault currents is from 700 A to 106,000 A. Each equation is applicable for the range

$$I_1 < I_{bf} < I_2$$

where:

I_2 is the interrupting rating of the CB at the voltage of interest.

I_1 is the minimum available three-phase, bolted, short-circuit current at which this method can be applied. I_1 is the lowest available three-phase, bolted, short-circuit current level that causes enough arcing current for instantaneous tripping to occur or for circuit breakers with no instantaneous trip, that causes short-time tripping to occur.

To find I_1, the instantaneous trip (I_t) of the circuit breaker must be found. This can be determined from the time-current curve, or it can be assumed to be 10 times the rating of the circuit breaker for circuit breakers rated above 100 amperes. For circuit breakers rated 100 amperes and below, a value of I_t = 1,300 A can be used. When short-time delay is utilized, I_t is the short-time pick-up current.

The corresponding bolted-fault current, I_{bf}, is found by solving the equation for arc current for box configurations by substituting I_t for arcing current. The 1.3 factor in Equation D.8.7(b) adjusts current to the top of the tripping band.

$$\lg(1.3I_t) = 0.084 + 0.096V + 0.586(\lg I_{bf}) + 0.559V(\lg I_{bf}) \quad \textbf{[D.8.7(a)]}$$

At 600 V,

$$\lg I_1 = 0.0281 + 1.091\lg(1.3I_t) \quad \textbf{[D.8.7(b)]}$$

At 480 V and lower,

$$\lg I_1 = 0.0407 + 1.17\lg(1.3I_t) \quad \textbf{[D.8.7(c)]}$$

$$I_{bf} = I_1 = 10^{\lg I_1} \quad \textbf{[D.8.7(d)]}$$

D.8.8 References. The complete data, including a spreadsheet calculator to solve the equations, may be found in the IEEE Guide for Performing Arc-Flash Hazard Calculations (IEEE Std 1584™-2002). IEEE publications are available from the Institute of Electrical and Electronic Engineers, 445 Hoes Lane, P.O. Box 1331, Piscataway, NJ 08855-1331, USA (http://standards.ieee.org/).

Copyright National Fire Protection Association
Provided by IHS under license with NFPA
No reproduction or networking permitted without license from IHS
Not for Resale

Annex E Electrical Safety Program

This annex is not a part of the requirements of this NFPA document but is included for informational purposes only.

See 110.7, Electrical Safety Program.

E.1 Typical Electrical Safety Program Principles. Electrical safety program principles include, but are not limited to, the following:

(1) Inspect/evaluate the electrical equipment
(2) Maintain the electrical equipment's insulation and enclosure integrity
(3) Plan every job and document first-time procedures
(4) Deenergize, if possible *(see 120.1)*
(5) Anticipate unexpected events
(6) Identify and minimize the hazard
(7) Protect the employee from shock, burn, blast, and other hazards due to the working environment
(8) Use the right tools for the job
(9) Assess people's abilities
(10) Audit these principles

E.2 Typical Electrical Safety Program Controls. Electrical safety program controls can include, but are not limited to, the following:

(1) Every electrical conductor or circuit part is considered energized until proven otherwise.
(2) No bare-hand contact is to be made with exposed energized electrical conductors or circuit parts above 50 volts to ground, unless the "bare-hand method" is properly used.
(3) Deenergizing an electrical conductor or circuit part and making it safe to work on is in itself a potentially hazardous task.
(4) Employer develops programs, including training, and employees apply them.
(5) Use procedures as "tools" to identify the hazards and develop plans to eliminate/control the hazards.
(6) Train employees to qualify them for working in an environment influenced by the presence of electrical energy.
(7) Identify/categorize tasks to be performed on or near exposed energized electrical conductors and circuit parts.
(8) Use a logical approach to determine potential hazard of task.
(9) Identify and use precautions appropriate to the working environment.

E.3 Typical Electrical Safety Program Procedures. Electrical safety program procedures can include, but are not limited to, the following:

(1) Purpose of task
(2) Qualifications and number of employees to be involved
(3) Hazardous nature and extent of task
(4) Limits of approach
(5) Safe work practices to be utilized
(6) Personal protective equipment involved
(7) Insulating materials and tools involved
(8) Special precautionary techniques
(9) Electrical diagrams
(10) Equipment details
(11) Sketches/pictures of unique features
(12) Reference data

Copyright National Fire Protection Association
Provided by IHS under license with NFPA
No reproduction or networking permitted without license from IHS
Not for Resale

Annex F Hazard/Risk Evaluation Procedure

This annex is not a part of the requirements of this NFPA document but is included for informational purposes only.

F.1 See 110.7(F), Hazard/Risk Evaluation Procedure. Figure F.1 illustrates the steps of a hazard/risk analysis evaluation procedure flow chart.

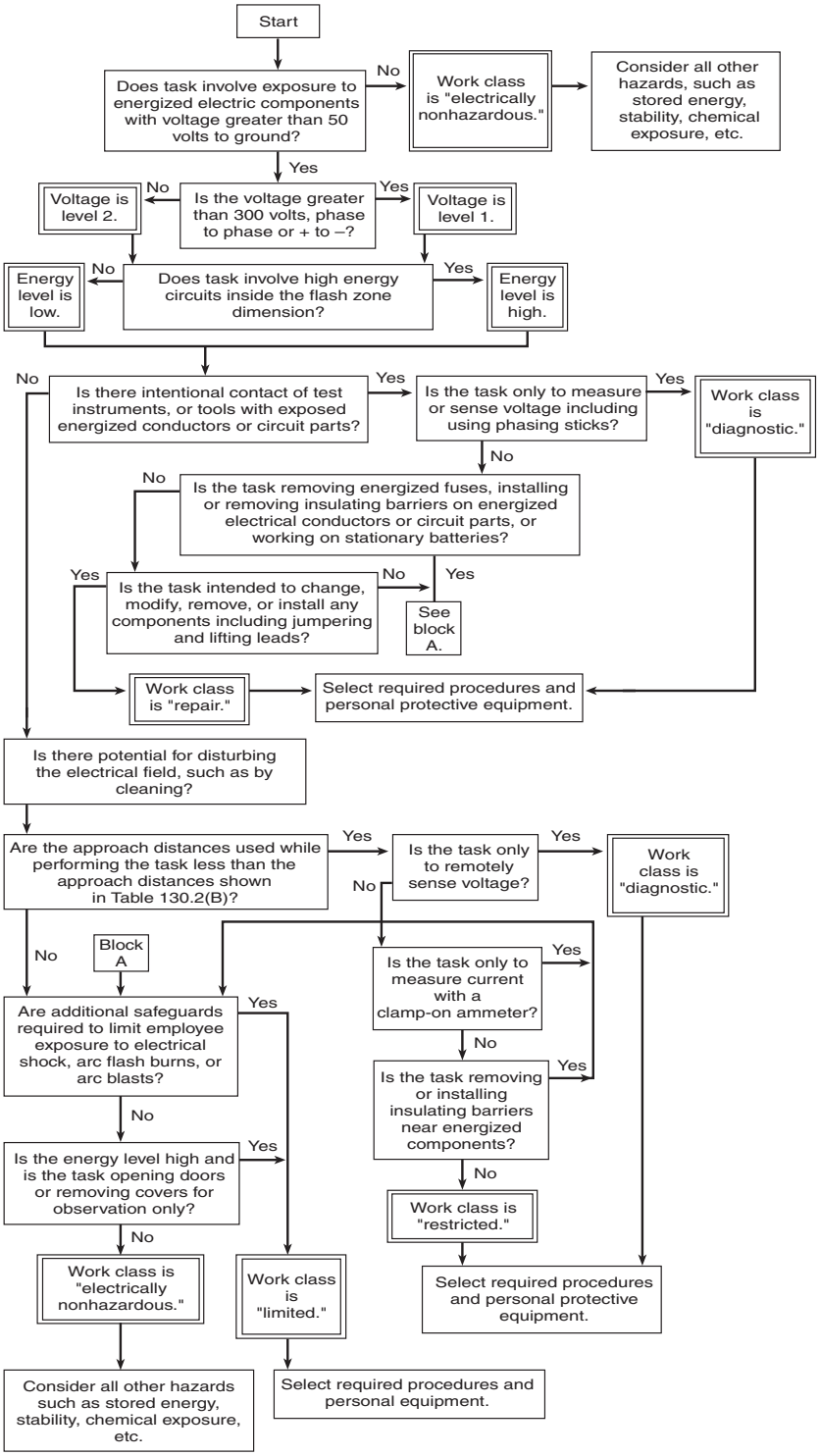

Figure F.1 Hazard/Risk Analysis Evaluation Procedure Flow Chart.

Copyright National Fire Protection Association
Provided by IHS under license with NFPA
No reproduction or networking permitted without license from IHS
Not for Resale

Annex G Sample Lockout/Tagout Procedure

This annex is not a part of the requirements of this NFPA document but is included for informational purposes only.

Lockout is the preferred method of controlling personnel exposure to electrical energy hazards. Tagout is an alternative method that is available to employers. To assist employers in developing a procedure that meets the requirement of 120.3 of NFPA 70E, the following sample procedure is provided for use in lockout or tagout programs. This procedure can be used for an individual employee control, a simple lockout/tagout, or as part of a complex lockout/tagout. Where a job/task is under the control of one person, the individual employee control procedure can be used in lieu of a lockout/tagout procedure. A more comprehensive plan will need to be developed, documented, and utilized for the complex lockout/tagout.

LOCKOUT (TAGOUT) PROCEDURE FOR ABC COMPANY

OR

TAGOUT PROCEDURE FOR _____ COMPANY

1.0 Purpose. This procedure establishes the minimum requirements for lockout (tagout) of electrical energy sources. It is to be used to ensure that conductors and circuit parts are disconnected from sources of electrical energy, locked (tagged), and tested before work begins where employees could be exposed to dangerous conditions. Sources of stored energy, such as capacitors or springs, shall be relieved of their energy, and a mechanism shall be engaged to prevent the re-accumulation of energy.

2.0 Responsibility. All employees shall be instructed in the safety significance of the lockout (tagout) procedure. All new or transferred employees and all other persons whose work operations are or might be in the area shall be instructed in the purpose and use of this procedure [include the name(s) of person(s) or job title(s) of employees with responsibility] shall ensure that appropriate personnel receive instructions on their roles and responsibilities. All persons installing a lockout (tagout) device shall sign their names and the date on the tag (or state how the name of the individual or person in charge will be available).

3.0 Preparation for Lockout (Tagout).

3.1 Review current diagrammatic drawings (or other equally effective means), tags, labels, and signs to identify and locate all disconnecting means to determine that power is interrupted by a physical break and not deenergized by a circuit interlock. Make a list of disconnecting means to be locked (tagged).

3.2 Review disconnecting means to determine adequacy of their interrupting ability. Determine if it will be possible to verify a visible open point, or if other precautions will be necessary.

3.3 Review other work activity to identify where and how other personnel might be exposed to sources of electrical energy hazards. Review other energy sources in the physical area to determine employee exposure to sources of other types of energy. Establish energy control methods for control of other hazardous energy sources in the area.

3.4 Provide an adequately rated voltage detector to test each phase conductor or circuit part to verify that they are deenergized. *(See 12.3.)* Provide a method to determine that the voltage detector is operating satisfactorily.

3.5 Where the possibility of induced voltages or stored electrical energy exists, call for grounding the phase conductors or circuit parts before touching them. Where it could be reasonably anticipated that contact with other exposed energized conductors or circuit parts is possible, call for applying ground connecting devices.

4.0 Individual Employee Control Procedure. The individual employee control procedure can be used when equipment with exposed conductors and circuit parts are deenergized for minor maintenance, servicing, adjusting, cleaning, inspection operating corrections, and the like, and the work shall be permitted to be performed without the placement of lockout/tagout devices on the disconnecting means, provided the disconnecting means is adjacent to the conductor, circuit parts, and equipment on which the work is performed, the disconnecting means is clearly visible to all employees involved in the work, and the work does not extend beyond the work shift.

5.0 Simple Lockout/Tagout. The simple lockout/tagout procedure will involve paragraphs 1.0 through 3.0, 5.0 through 9.0, and 11.0 through 13.0.

6.0 Sequence of Lockout (Tagout) System Procedures.

6.1 The employees shall be notified that a lockout (tagout) system is going to be implemented and the reason therefore. The qualified employee implementing the lockout (tagout) shall know the disconnecting means location for all sources of electrical energy and the location of all sources of stored energy. The qualified person shall be knowledgeable of hazards associated with electrical energy.

6.2 If the electrical supply is energized, the qualified person shall deenergize and disconnect the electric supply and relieve all stored energy.

Copyright National Fire Protection Association
Provided by IHS under license with NFPA
No reproduction or networking permitted without license from IHS
Not for Resale

6.3 Lockout (tagout) all disconnecting means with lockout (tagout) devices.

FPN: For tagout, one additional safety measure must be employed, such as opening, blocking, or removing an additional circuit element.

6.4 Attempt to operate the disconnecting means to determine that operation is prohibited.

6.5 A voltage-detecting instrument shall be used. *(See 12.3.)* Inspect the instrument for visible damage. Do not proceed if there is an indication of damage to the instrument until an undamaged device is available.

6.6 Verify proper instrument operation and then test for absence of voltage.

6.7 Verify proper instrument operation after testing for absence of voltage.

6.8 Where required, install grounding equipment/conductor device on the phase conductors or circuit parts, to eliminate induced voltage or stored energy, before touching them. Where it has been determined that contact with other exposed energized conductors or circuit parts is possible, apply ground connecting devices rated for the available fault duty.

6.9 The equipment and/or electrical source is now locked out (tagged out).

7.0 Restoring the equipment and/or electrical supply to normal condition.

7.1 After the job/task is complete, visually verify that the job/task is complete.

7.2 Remove all tools, equipment, and unused materials and perform appropriate housekeeping.

7.3 Remove all grounding equipment/conductor/devices.

7.4 Notify all personnel involved with the job/task that the lockout (tagout) is complete, that the electrical supply is being restored, and to remain clear of the equipment and electrical supply.

7.5 Perform any quality control tests/checks on the repaired/replaced equipment and/or electrical supply.

7.6 Remove lockout (tagout) devices by the person who installed them.

7.7 Notify the equipment and/or electrical supply owner that the equipment and/or electrical supply is ready to be returned to normal operation.

7.8 Return the disconnecting means to their normal condition.

8.0 Procedure Involving More Than One Person. For a simple lockout/tagout and where more than one person is involved in the job/task, each person shall install his/her own personal lockout (tagout) device.

9.0 Procedure Involving More Than One Shift. When the lockout (tagout) extends for more than one day, the lockout (tagout) shall be verified to be still in place at the beginning of the next day. Where the lockout (tagout) is continued on successive shifts, the lockout (tagout) is considered to be a complex lockout (tagout).

For complex lockout (tagout), the person-in-charge shall identify the method for transfer of the lockout (tagout) and of communication with all employees.

10.0 Complex Lockout (Tagout). A complex lockout/tagout plan is required where one or more of the following exist:

(1) Multiple energy sources (more than one)
(2) Multiple crews
(3) Multiple crafts
(4) Multiple locations
(5) Multiple employers
(6) Unique disconnecting means
(7) Complex or particular switching sequences
(8) Continues for more than one shift, that is, new workers

10.1 All complex lockout/tagout procedures shall require a written plan of execution. The plan will include the requirements in 1.0 through 3.0, 6.0, 7.0, and 9.0 through 13.0.

10.2 A person in charge shall be involved with a complex lockout/tagout procedure. At this location shall be the person in charge.

10.3 The person in charge shall develop a written plan of execution and communicate that plan to all persons engaged in the job/task. The person in charge shall be held accountable for safe execution of the complex lockout/tagout plan. The complex lockout/tagout plan must address all the concerns of employees who might be exposed, and they must understand how electrical energy is controlled. The person in charge shall ensure that each person understands the hazards to which they are exposed and the safety-related work practices they are to use.

10.4 All complex lockout/tagout plans identify the method to account for all persons who might be exposed to electrical hazards in the course of the lockout/tagout.

Select which of the following methods is to be used:

(1) Each individual will install his or her own personal lockout or tagout device.

Copyright National Fire Protection Association
Provided by IHS under license with NFPA
No reproduction or networking permitted without license from IHS
Not for Resale

(2) The person in charge shall lock his/her key in a "lock box"
(3) The person in charge shall maintain a sign in/out log for all personnel entering the area.
(4) Another equally effective methodology.

10.5 The person in charge can install locks/tags, or direct their installation on behalf of other employees.

10.6 The person in charge can remove locks/tags or direct their removal on behalf of other employees, only after all personnel are accounted for and ensured to be clear of potential electrical hazards.

10.7 Where the complex lockout (tagout) is continued on successive shifts, the person in charge shall identify the method for transfer of the lockout and of communication with all employees.

11.0 Discipline.

11.1 Knowingly violating this procedure will result in _____ (state disciplinary actions that will be taken).

11.2 Knowingly operating a disconnecting means with an installed lockout device (tagout device) will result in _____ (state disciplinary actions to be taken).

12.0 Equipment.

12.1 Locks shall be _____ (state type and model of selected locks).

12.2 Tags shall be _____ (state type and model to be used).

12.3 Voltage detecting device(s) to be used shall be _____ (state type and model).

13.0 Review. This procedure was last reviewed on _____, and is scheduled to be reviewed again on _____ _____ (not more than one year from the last review).

14.0 Lockout/Tagout Training. Recommended training can include, but is not limited to, the following:

(1) Recognizing lockout/tagout devices
(2) Installing lockout/tagout devices
(3) Duty of employer in writing procedures
(4) Duty of employee in executing procedures
(5) Duty of person-in-charge
(6) Authorized and unauthorized removal of locks/tags
(7) Enforcing execution of lockout/tagout procedures
(8) Individual employee control of energy
(9) Simple lockout/tagout
(10) Complex lockout/tagout
(11) Using single line and diagrammatic drawings to identify sources of energy
(12) Use of tags and warning signs
(13) Release of stored energy
(14) Personnel accounting methods
(15) Grounding needs/requirements
(16) Safe use of voltage detecting instruments

Copyright National Fire Protection Association
Provided by IHS under license with NFPA
No reproduction or networking permitted without license from IHS
Not for Resale

Annex H Simplified, Two-Category, Flame-Resistant (FR) Clothing System

This annex is not a part of the requirements of this NFPA document but is included for informational purposes only.

H.1 Use of Simplified Approach. The use of Table H.1 is suggested as a simplified approach to assure adequate PPE for electrical workers within facilities with large and diverse electrical systems. The clothing listed in Table H.1 fulfills the minimum FR clothing requirements of Table 130.7(C)(10) and Table 130.7(C)(11). The clothing systems listed in this table should be used with the other PPE appropriate for the Hazard/Risk Category. See Table 130.7(C)(11).

Table H.1 Simplified, Two-Category, Flame-Resistant Clothing System

Clothing*	Applicable Tasks
Everyday Work Clothing	All Hazard/Risk Category 1 and 2 tasks listed in Table 130.7(C)(10).
FR long-sleeve shirt (minimum arc rating of 4) worn over an untreated cotton T-shirt with FR pants (minimum arc rating of 8)	On systems operating at less than 1000 volts, these tasks include work on all equipment *except*
or	• Insertion or removal of low-voltage motor starter "buckets," • Insertion or removal of power circuit breakers from switchgear cubicles or • Removal of bolted covers from switchgear.
FR coveralls (minimum arc rating of 4) worn over an untreated cotton T-shirt (or an untreated natural fiber long-sleeve shirt) with untreated natural fiber pants.	On systems operating at 1000 volts or greater, tasks also include the operation of switching devices *with equipment enclosure doors closed*.
Electrical "Switching" Clothing	All Hazard/Risk Category 3 and 4 tasks listed in Table 130.7(C)(10) On systems operating at 1000 volts or greater, these tasks include work on exposed live parts of all equipment.
Multilayer FR flash jacket and FR bib overalls worn over either FR coveralls (minimum arc rating of 4) or FR long-sleeve shirt and FR pants (minimum arc rating of 4), worn over untreated natural fiber long-sleeve shirt and pants, worn over an untreated cotton T-shirt	On systems of less than 1000 volts, tasks include insertion or removal of low-voltage motor starter MCC "buckets," insertion or removal of plug-in devices into or from busway, insertion or removal of power circuit breakers and removal of bolted covers from switchgear.
or	
Insulated FR coveralls (with a minimum arc rating of 25, independent of other layers) worn over untreated natural fiber long-sleeve shirt with untreated denim cotton blue jeans ("regular weight," minimum 12 oz/yd^2 fabric weight), worn over an untreated cotton T-shirt.	

*Note other PPE required for the specific tasks listed in Tables 130.7(C)(9)(a) and 130.7(C)(10), which include arc-rated face shields or flash suit hoods, FR hardhat liners, safety glasses or safety goggles, hard hat, hearing protection, leather gloves, voltage-rated gloves, and voltage-rated tools.

Copyright National Fire Protection Association
Provided by IHS under license with NFPA
No reproduction or networking permitted without license from IHS
Not for Resale

Annex I Job Briefing and Planning Checklist

This annex is not a part of the requirements of this NFPA document but is included for informational purposes only.

I.1 Figure I.1 illustrates considerations for a Job Briefing and Planning Checklist.

Identify

- ❑ The hazards
- ❑ The voltage levels involved
- ❑ Skills required
- ❑ Any "foreign" (secondary source) voltage source
- ❑ Any unusual work conditions
- ❑ Number of people needed to do the job
- ❑ The shock protection boundaries
- ❑ The available incident energy
- ❑ Potential for arc flash (Conduct a flash-hazard analysis.)
- ❑ Flash protection boundary

Ask

- ❑ Can the equipment be de-energized?
- ❑ Are backfeeds of the circuits to be worked on possible?
- ❑ Is a "standby person" required?

Check

- ❑ Job plans
- ❑ Single-line diagrams and vendor prints
- ❑ Status board
- ❑ Information on plant and vendor resources is up to date
- ❑ Safety procedures
- ❑ Vendor information
- ❑ Individuals are familiar with the facility

Know

- ❑ What the job is
- ❑ Who else needs to know—Communicate!
- ❑ Who is in charge

Think

- ❑ About the unexpected event . . . What if?
- ❑ Lock — Tag — Test — Try
- ❑ Test for voltage — FIRST
- ❑ Use the right tools and equipment, including PPE
- ❑ Install and remove grounds
- ❑ Install barriers and barricades
- ❑ What else . . . ?

Prepare for an emergency

- ❑ Is the standby person CPR trained?
- ❑ Is the required emergency equipment available? Where is it?
- ❑ Where is the nearest telephone?
- ❑ Where is the fire alarm?
- ❑ Is confined space rescue available?
- ❑ What is the exact work location?
- ❑ How is the equipment shut off in an emergency?
- ❑ Are the emergency telephone numbers known?
- ❑ Where is the fire extinguisher?
- ❑ Are radio communications available?

Figure I.1 Job Briefing and Planning Checklist.

Copyright National Fire Protection Association
Provided by IHS under license with NFPA
No reproduction or networking permitted without license from IHS
Not for Resale

Annex J Energized Electrical Work Permit

This annex is not a part of the requirements of this NFPA document but is included for informational purposes only.

J.1 Figure J.1 illustrates considerations for a Energized Electrical Work Permit.

ENERGIZED ELECTRICAL WORK PERMIT

PART I: TO BE COMPLETED BY THE REQUESTER:

Job/Work Order Number _____

(1) Description of circuit/equipment/job location: _____

_____

(2) Description of work to be done: _____

_____

(3) Justification of why the circuit/equipment cannot be de-energized or the work deferred until the next scheduled outage:

_____

_____

_____ _____

Requester/Title Date

PART II: TO BE COMPLETED BY THE ELECTRICALLY QUALIFIED PERSONS *DOING* THE WORK:

Check when Complete

(1) Detailed job description procedure to be used in performing the above detailed work: _____ ☐

_____

_____

(2) Description of the Safe Work Practices to be employed: _____ ☐

_____

(3) Results of the Shock Hazard Analysis: _____ ☐

_____

(4) Determination of Shock Protection Boundaries: _____ ☐

_____

(5) Results of the Flash Hazard Analysis: _____ ☐

_____

(6) Determination of the Flash Protection Boundary: _____ ☐

_____

(7) Necessary personal protective equipment to safely perform the assigned task: _____ ☐

_____

(8) Means employed to restrict the access of unqualified persons from the work area: _____ ☐

_____

(9) Evidence of completion of a Job Briefing including discussion of any job-related hazards: _____ ☐

_____

(10) Do you agree the above described work can be done safely? ❑ Yes ❑ No (If *no,* return to requester)

_____ _____

Electrically Qualified Person(s) Date

_____ _____

Electrically Qualified Person(s) Date

PART III: APPROVAL(S) TO PERFORM THE WORK WHILE ELECTRICALLY ENERGIZED:

_____ _____

Manufacturing Manager Maintenance/Engineering Manager

_____ _____

Safety Manager Electrically Knowledgeable Person

_____ _____

General Manager Date

Note: Once the work is complete, forward this form to the site Safety Department for review and retention.

© 2004 National Fire Protection Association NFPA 70E (p. 1 of 1)

Figure J.1 Sample Permit for Energized Electrical Work.

Copyright National Fire Protection Association
Provided by IHS under license with NFPA
No reproduction or networking permitted without license from IHS
Not for Resale

Annex K General Categories of Electrical Hazards

This annex is not a part of the requirements of this NFPA document but is included for informational purposes only.

K.1 General Categories. There are three general categories of electrical hazards: electrical shock, arc-flash, and arc-blast.

K.2 Electric Shock. Approximately 30,000 nonfatal electrical shock accidents occur each year. The National Safety Council estimates that about 1000 fatalities each year are due to electrocution, more than half of them while servicing energized systems of less than 600 volts.

Electrocution is the fourth leading cause of industrial fatalities, after traffic, homicide, and construction accidents. The current required to light a 7½ watt, 120 volt lamp, if passed across the chest, is enough to cause a fatality. The most damaging paths through the body are through the lungs, heart, and brain.

K.3 Arc-Flash. When an electric current passes through air between ungrounded conductors or between ungrounded conductors and grounded conductors, the temperatures can reach 35,000°F. Exposure to these extreme temperatures both burns the skin directly and causes ignition of clothing, which adds to the burn injury. The majority of hospital admissions due to electrical accidents are from arc-flash burns, not from shocks. Each year more than 2,000 people are admitted to burn centers with severe arc-flash burns. Arc-flashes can and do kill at distances of 10 ft.

K.4 Arc-Blast. The tremendous temperatures of the arc cause the explosive expansion of both the surrounding air and the metal in the arc path. For example, copper expands by a factor of 67,000 times when it turns from a solid to a vapor. The danger associated with this expansion is one of high pressures, sound, and shrapnel. The high pressures can easily exceed hundreds or even thousands of pounds per square foot, knocking workers off ladders, rupturing eardrums, and collapsing lungs. The sounds associated with these pressures can exceed 160 dB. Finally, material and molten metal is expelled away from the arc at speeds exceeding 700 miles per hour, fast enough for shrapnel to completely penetrate the human body.

Copyright National Fire Protection Association
Provided by IHS under license with NFPA
No reproduction or networking permitted without license from IHS
Not for Resale

Annex L Typical Application of Safeguards in the Cell Line Working Zone

This annex is not a part of the requirements of this NFPA document but is included for informational purposes only.

L.1 Application of Safeguards. This section permits a typical application of safeguards in electrolytic areas where hazardous electrical conditions exist. Take, for example, an employee working on an energized cell. The employee uses manual contact to make adjustments and repairs. Consequently, the exposed energized cell and grounded metal floor could present a hazardous electrical condition. Safeguards for this employee can be provided in several ways:

(1) Protective boots can be worn that isolate the employee's feet from the floor and that provide a safeguard from the hazardous electrical condition.
(2) Protective gloves can be worn that isolate the employee's hands from the energized cell and that provide a safeguard.
(3) If the work task causes severe deterioration, wear, or damage to personal protective equipment, the employee might have to wear both protective gloves and boots.
(4) A permanent or temporary insulating surface can be provided for the employee to stand on to provide a safeguard.
(5) The design of the installation can be modified to provide a conductive surface for the employee to stand on. If the conductive surface is bonded to the cell, the hazardous electrical condition will be removed and a safeguard will be provided by voltage equalization.
(6) Safe work practices can provide safeguards. If protective boots are worn, the employee should not make long reaches over energized (or grounded) surfaces such that his or her elbow bypasses the safeguard. If such movements are required, protective sleeves, protective mats, or special tools should be utilized. Training on the nature of hazardous electrical conditions and proper use and condition of safeguards is in itself a safeguard.
(7) The energized cell can be temporarily bonded to ground to remove the hazardous electrical condition.

L.2 Electrical Power Receptacles. Power supply circuits and receptacles in the cell line area for portable electric equipment should meet the requirements of 430.8(F). However, it is recommended that receptacles for portable electric equipment not be installed in electrolytic cell areas and that only pneumatic powered portable tools and equipment be used.

Copyright National Fire Protection Association
Provided by IHS under license with NFPA
No reproduction or networking permitted without license from IHS
Not for Resale

Annex M Cross-Reference Tables

This annex is not a part of the requirements of this NFPA document but is included for informational purposes only.

Table M.1 Cross Reference from the 2000 edition of NFPA 70E to the 2004 edition of NFPA 70E

Topic	2000 edition	2004 edition
Introduction	Introduction	Article 90
Scope	Introduction, I-1	90.1
Definitions	Introduction, I-2	Article 100
Installation Safety Requirements	Part I	Chapter 4
General Requirements for Electrical Installations	Part I, Chapter 1	Article 400
General	Part I, Chapter 1, 1-1	400.1
Approval	Part I, Chapter 1, 1-2	400.2
Examination, Identification, Installation, and Use of Equipment	Part I, Chapter 1, 1-3	400.3
Insulation Integrity	Part I, Chapter 1, 1-3.3	400.4
Interrupting Rating	Part I, Chapter 1, 1-3.4	400.5
Circuit Impedance and Other Characteristics	Part I, Chapter 1, 1-3.5	400.6
Deteriorating Agents	Part I, Chapter 1, 1-3.6	400.7
Mechanical Execution of Work	Part I, Chapter 1, 1-3.7	400.8
Mounting and Cooling of Equipment	Part I, Chapter 1, 1-3.8	400.9
Electrical Connections	Part I, Chapter 1, 1-4	400.10
Arcing Parts	Part I, Chapter 1, 1-5	400.12
Marking	Part I, Chapter 1, 1-6	400.13
Identification of Disconnecting Means	Part I, Chapter 1, 1-7	400.14
600 Volts, Nominal, or Less	Part I, Chapter 1, 1-8	Article 400, Section B
Spaces about Electrical Equipment	Part I, Chapter 1, 1-8.1	400.15
Guarding of Live Parts	Part I, Chapter 1, 1-8.2	400.16
Over 600 Volts, Nominal	Part I, Chapter 1, 1-9	Article 400, Section C
General	Part I, Chapter 1, 1-9.1	400.17
Enclosure for Electrical Installations	Part I, Chapter 1, 1-9.2	400.18
Work Space about Equipment	Part I, Chapter 1, 1-9.3	400.19
Entrance and Access to Work Space	Part I, Chapter 1, 1-9.4	400.20
Table for Minimum Depth of Clear Working Space at Electric Equipment	Part I, Chapter 1, Table 1-9.5.1	Table 400.21
Wiring Design and Protection	Part I, Chapter 2	Article 410
Use and Identification of Grounded and Grounding Conductors	Part I, Chapter 2, 2-1	410.1
Branch Circuits	Part I, Chapter 2, 2-2	410.2
Identification of Ungrounded Conductors	Part I, Chapter 2, 2-2.3	410.3
Ground-Fault Circuit-Interrupter Protection for Personnel	Part I, Chapter 2, 2-2.4	410.4
Outlet Devices	Part I, Chapter 2, 2-2.5	410.5
Cord Connections	Part I, Chapter 2, 2-2.6	410.6
Outside Branch Circuit, Feeder, and Service Conductors, 600 Volts, Nominal, or Less	Part I, Chapter 2, 2-3	410.7
Services	Part I, Chapter 2, 2-4	410.8
Overcurrent Protection	Part I, Chapter 2, 2-5	410.9
Grounding	Part I, Chapter 2, 2-6	410.10
Wiring Methods, Components, and Equipment for General Use	Part I, Chapter 3	Article 420
Wiring Methods	Part I, Chapter 3, 3-1	420.1
Cabinets, Cutout Boxes, and Meter Socket Enclosures	Part I, Chapter 3, 3-2	420.2
Position and Connection of Switches	Part I, Chapter 3, 3-3	420.3
Switchboards and Panelboards	Part I, Chapter 3, 3-4	420.4
Enclosures for Damp or Wet Locations	Part I, Chapter 3, 3-5	420.5
Conductor Identification	Part I, Chapter 3, 3-6	420.6
Flexible Cords and Cables, 600 Volts, Nominal, or Less	Part I, Chapter 3, 3-7	420.7
Portable Cables Over 600 Volts, Nominal	Part I, Chapter 3, 3-8	420.8
Fixture Wires	Part I, Chapter 3, 3-9	420.9

Copyright National Fire Protection Association
Provided by IHS under license with NFPA
No reproduction or networking permitted without license from IHS
Not for Resale

Table M.1 *Continued*

Topic	2000 edition	2004 edition
Equipment for General Use	Part I, Chapter 3, 3-10	420.10
Specific Purpose Equipment and Installations	Part I, Chapter 4	Article 430
Electric Signs and Outline Lighting	Part I, Chapter 4, 4-1	430.1
Cranes and Hoists	Part I, Chapter 4, 4-2	430.2
Elevators, Dumbwaiters, Escalators, Moving Walks, Wheelchair Lifts, and Stairway Chair Lifts	Part I, Chapter 4, 4-3	430.3
Electric Welders — Disconnecting Means	Part I, Chapter 4, 4-4	430.4
Information Technology Equipment — Disconnecting Means	Part I, Chapter 4, 4-5	430.5
X-Ray Equipment	Part I, Chapter 4, 4-6	430.6
Induction and Dielectric Heating	Part I, Chapter 4, 4-7	430.7
Electrolytic Cells	Part I, Chapter 4, 4-8	430.8
Electrically Driven or Controlled Irrigation Machines	Part I, Chapter 4, 4-9	430.9
Swimming Pools, Fountains, and Similar Installations	Part I, Chapter 4, 4-10	430.10
Carnivals, Circuses, Fairs, and Similar Events	Part I, Chapter 4, 4-11	430.11
Hazardous (Classified) Locations, Class I, II, and III, Divisions 1 and 2 and Class I, Zones 0, 1, and 2	Part I, Chapter 5	Article 440
Scope	Part I, Chapter 5, 5-1	440.1
General	Part I, Chapter 5, 5-2	440.2
Class I, Zone 0, 1, and 2 Locations	Part I, Chapter 5, 5-4	440.3
Special Systems	Part I, Chapter 6	Article 450
Systems Over 600 Volts, Nominal	Part I, Chapter 6, 6-1	450.1
Emergency Systems	Part I, Chapter 6, 6-2	450.2
Class 1, Class 2, and Class 3 Remote Control, Signaling, and Power-Limited Circuits	Part I, Chapter 6, 6-3	450.3
Fire Alarm Systems	Part I, Chapter 6, 6-4	450.4
Communications Systems	Part I, Chapter 6, 6-5	450.5
Solar Photovoltaic Systems	Part I, Chapter 6, 6-6	450.6
Integrated Electrical Systems	Part I, Chapter 6, 6-7	450.7
Safety-Related Work Practices	Part II	Chapter 1
General	Part II, Chapter 1	Article 110
Scope	Part II, Chapter 1, 1-1	110.1
Purpose.	Part II, Chapter 1, 1-2	110.2
Responsibility	Part II, Chapter 1, 1-3	110.3
Organization	Part II, Chapter 1, 1-4	110.5
Training Requirements	Part II, Chapter 1, 1-5	110.6
General Requirements for Electrical Work Practices	Part II, Chapter 2	110.1
Working On or Near Electrical Conductors or Circuit Parts	Part II, Chapter 2, 2-1	130.1
General	Part II, Chapter 2, 2-1.1	110.1
Working On or Near Deenergized Electrical Conductors or Circuit Parts that Have Lockout/Tagout Devices Applied	Part II, Chapter 2, 2-1.2	120.2
Approach Boundaries to Live Parts	Part II, Chapter 2, 2-1.3.4	130.2
Table for Approach Boundaries to Live Parts for Shock Protection	Part II, Chapter 2, Table 2-1.3.4	Table 130.2(B)
Work On or Near Uninsulated Overhead Lines	Part II, Chapter 2, 2-2	130.5
Electrical Safety Program	Part II, Chapter 2, 2-3	110.7
Conductive Articles Being Worn	Part II, Chapter 2, 2-3.5	130.6(D)
Conductive Materials, Tools, and Equipment Being Handled	Part II, Chapter 2, 2-3.6	130.6(E)
Insulated Tools and Equipment	Part II, Chapter 2, 2-3.7	130.7(D)(1)
Personal and Other Protective Equipment	Part II, Chapter 3	130.7
Standards for Personal Protective Equipment	Part II, Chapter 3, 3-3.8	130.7(C)(8)
Table for Standards on Protective Equipment	Part II, Chapter 3, Table 3-3.8	Table 130.7(C)(8)
Selection of Personal Protective Equipment	Part II, Chapter 3, 3-3.9	130.7(C)(9)
Personal Protective Equipment Required for Various Tasks	Part II, Chapter 3, 3-3.9.1	130.7(C)(9)(a)
Table for Hazard Risk Category Classifications	Part II, Chapter 3, Table 3-3.9.1	Table 130.7(C)(9)(a)
Protective Clothing and Personal Protective Equipment Matrix	Part II, Chapter 3, 3-3.9.2	130.7(C)(10)
Table for Protective Clothing and Personal Protective Equipment (PPE) Matrix	Part II, Chapter 3, Table 3-3.9.2	Table 130.7(C)(10)
Protective Clothing Characteristics	Part II, Chapter 3, 3-3.9.3	130.7(C)(11)

Copyright National Fire Protection Association
Provided by IHS under license with NFPA
No reproduction or networking permitted without license from IHS
Not for Resale

Table M.1 *Continued*

Topic	2000 edition	2004 edition
Table for Protective Clothing Characteristics	Part II, Chapter 3, Table 3-3.9.3	Table 130.7(C)(11)
Factors in Selection of Protective Clothing	Part II, Chapter 3, 3-3.9.4	130.7(C)(12)
Arc Flash Protective Equipment	Part II, Chapter 3, 3-3.9.5	130.7(C)(13)
Other Protective Equipment	Part II, Chapter 3, 3-4	130.7(D)
Test Instruments and Equipment	Part II, Chapter 3, 3-4.10	110.9(A)
Standards for Other Protective Equipment	Part II, Chapter 3, 3-4.11	130.7(F)
Table for Standards on Other Protective Equipment	Part II, Chapter 3, Table 3-4.11	Table 130.7(F)
Use of Specific Safety-Related Equipment and Work Practices	Part II, Chapter 4	
Test Instruments and Equipment Use	Part II, Chapter 4, 4-1	110.9(A)
Lockout/Tagout Practices and Devices	Part II, Chapter 5	120.3
Appendix for Limits of Approach	Part II, Appendix A	Annex C
Appendix for Sample Calculation of Flash Protection Boundary	Part II, Appendix B	Annex D
Appendix for Electrical Safety Program	Part II, Appendix C	Annex E
Appendix for Hazard/Risk Evaluation Procedure	Part II, Appendix D	Annex F
Appendix for Sample Lockout/Tagout Procedure	Part II, Appendix E	Annex G
Appendix for Simplified, Two-Category, Flame-Resistant (FR) Clothing System	Part II, Appendix F	Annex H
Safety-Related Maintenance Requirements	Part III	Chapter 2
Introduction	Part III, Chapter 1	Article 200
General Maintenance Requirements	Part III, Chapter 2	Article 205
Qualified Persons	Part III, Chapter 2, 2-1	205.1
Single Line Diagram	Part III, Chapter 2, 2-2	205.2
Spaces About Electrical Equipment	Part III, Chapter 2, 2-3	205.3
Grounding and Bonding	Part III, Chapter 2, 2-4	205.4
Guarding of Live Parts	Part III, Chapter 2, 2-5	205.5
Safety Equipment	Part III, Chapter 2, 2-6	205.6
Clear Spaces	Part III, Chapter 2, 2-7	205.7
Identification of Components	Part III, Chapter 2, 2-8	205.8
Warning Signs	Part III, Chapter 2, 2-9	205.9
Identification of Circuits	Part III, Chapter 2, 2-10	205.10
Single and Multiple Conductors and Cables	Part III, Chapter 2, 2-11	205.11
Flexible Cords and Cables	Part III, Chapter 2, 2-12	205.12
Substation, Switchgear Assemblies, Switchboards, Panelboards, Motor Control Centers, and Disconnect Switches	Part III, Chapter 3	Article 210
Enclosures	Part III, Chapter 3, 3-1	210.1
Area Enclosures	Part III, Chapter 3, 3-2	210.2
Conductors	Part III, Chapter 3, 3-3	210.3
Insulation Integrity	Part III, Chapter 3, 3-4	210.4
Protective Devices	Part III, Chapter 3, 3-5	210.5
Premises Wiring	Part III, Chapter 4	Article 215
Covers for Wiring System Components	Part III, Chapter 4, 4-1	215.1
Open Wiring Protection	Part III, Chapter 4, 4-2	215.2
Raceways and Cable Trays	Part III, Chapter 4, 4-3	215.3
Controller Equipment	Part III, Chapter 5	Article 220
Scope	Part III, Chapter 5, 5-1	220.1
Protection and Control/Circuitry	Part III, Chapter 5, 5-2	220.2
Fuses and Circuit Breakers	Part III, Chapter 6	Article 225
Fuses	Part III, Chapter 6, 6-1	225.1
Molded-Case Circuit Breakers	Part III, Chapter 6, 6-2	225.2
Circuit Breaker Testing	Part III, Chapter 6, 6-3	225.3
Rotating Equipment	Part III, Chapter 7	Article 230
Terminal Boxes	Part III, Chapter 7, 7-1	230.1
Guards, Barriers, and Access Plates	Part III, Chapter 7, 7-2	230.2
Hazardous (Classified) Locations	Part III, Chapter 8	Article 235
Scope	Part III, Chapter 8, 8-1	235.1
Maintenance Requirements for Hazardous (Classified) Locations	Part III, Chapter 8, 8-2	235.2

Copyright National Fire Protection Association
Provided by IHS under license with NFPA
No reproduction or networking permitted without license from IHS
Not for Resale

Table M.1 *Continued*

Topic	2000 edition	2004 edition
Batteries and Battery Rooms	Part III, Chapter 9	Article 240
Ventilation	Part III, Chapter 9, 9-1	240.1
Eye and Body Wash Apparatus	Part III, Chapter 9, 9-2	240.2
Cell Flame Arresters and Cell Ventilation	Part III, Chapter 9, 9-3	240.3
Portable Electric Tools and Equipment	Part III, Chapter 10	Article 245
Maintenance Requirements for Portable Tools and Equipment	Part III, Chapter 10, 10-1	245.1
Personal Safety and Protective Equipment	Part III, Chapter 11	Article 250
Maintenance Requirements for Personal Safety and Protective Equipment	Part III, Chapter 11, 11-1	250.1
Inspection and Testing of Protective Equipment and Protective Tools	Part III, Chapter 11, 11-2	250.2
Safety Grounding Equipment	Part III, Chapter 11, 11-3	250.3
Safety Requirements for Special Equipment	Part IV	Chapter 3
Introduction	Part IV, Chapter 1	Article 300
Scope	Part IV, Chapter 1, 1-1	300.1
Responsibility	Part IV, Chapter 1, 1-2	300.2
Organization	Part IV, Chapter 1, 1-3	300.3
Safety-Related Work Practices for Electrolytic Cells	Part IV, Chapter 2	Article 310
Scope	Part IV, Chapter 2, 2-1	310.1
Definitions	Part IV, Chapter 2, 2-2	310.2
Safety Training	Part IV, Chapter 2, 2-3	310.3
Employee Training	Part IV, Chapter 2, 2-4	310.4
Safeguarding of Employees in the Cell Line Working Zone	Part IV, Chapter 2, 2-5	310.5
Portable Tools and Equipment	Part IV, Chapter 2, 2-6	310.6
Appendix for Typical Application of Safeguards in the Cell Line Working Zone	Part IV, Chapter 2, Appendix A	Annex L
Safety Requirements Related to Batteries and Battery Rooms	Part IV, Chapter 3	Article 320
Scope	Part IV, Chapter 3, 3-1	320.1
Definitions	Part IV, Chapter 3, 3-2	320.2
Battery Connections	Part IV, Chapter 3, 3-3	320.3
Installations of Batteries	Part IV, Chapter 3, 3-4	320.4
Battery Room Requirements	Part IV, Chapter 3, 3-5	320.5
Battery Enclosure Requirements	Part IV, Chapter 3, 3-6	320.6
Protection	Part IV, Chapter 3, 3-7	320.7
Personnel Protective Equipment	Part IV, Chapter 3, 3-8	320.8
Tools and Equipment	Part IV, Chapter 3, 3-9	320.9
Safety Related Work Practices for Use of Lasers	Part IV, Chapter 4	Article 330
Scope	Part IV, Chapter 4, 4-1	330.1
Definitions	Part IV, Chapter 4, 4-2	330.2
Safety Training	Part IV, Chapter 4, 4-3	330.3
Safeguarding of Employees in the Laser Operating Area	Part IV, Chapter 4, 4-4	330.4
Employee Responsibility	Part IV, Chapter 4, 4-5	330.5
Safety Related Work Practices: Power Electronic Equipment	Part IV, Chapter 5	Article 340
Scope	Part IV, Chapter 5, 5-1	340.1
Application	Part IV, Chapter 5, 5-2	340.3
Reference Standards	Part IV, Chapter 5, 5-3	340.4
Definition	Part IV, Chapter 5, 5-4	340.2
Hazards Associated with Power Electronic Equipment	Part IV, Chapter 5, 5-5	340.5
Hazards Associated with Power Electronic Equipment	Part IV, Chapter 5, 5-6	340.6
Specific Measures for Personnel Safety	Part IV, Chapter 5, 5-7	340.7
Appendix for Tables, Notes, and Charts [Reserved]	Appendix A	Annex A
Appendix for Referenced Publications	Appendix B	Annex B

Copyright National Fire Protection Association
Provided by IHS under license with NFPA
No reproduction or networking permitted without license from IHS
Not for Resale

Table M.2 Cross Reference from the 2004 edition of NFPA 70E to the 2000 edition of NFPA 70E

Topic	2004 Edition	2000 Edition
Introduction		
Scope	90.1	I-1
Standard Arrangement	90.2	I-1.3
Safety-Related Work Practices	Chapter 1	Part II
Definitions	Article 100	I-2
General Requirements for Electrical Safety-Related Work Practices	Article 110	Part II, Chapter 1
Scope	110.1	Part II, 1-1
Purpose	110.2	Part II, 1-2
Responsibility	110.3	Part II, 1-3
Multiemployer Relationship	110.4	
Organization	110.5	Part II, 1-4
Training Requirements	110.6	Part II, 1-5
Electrical Safety Program	110.7	Part II, 2-3
Working On or Near Electrical Conductors or Circuit Parts	110.8	Part II, 2-1
Use of Equipment	110.9	Part II, 1-8
Establishing an Electrically Safe Work Condition	Article 120	Part II, Chapter 1
Process of Achieving an Electrically Safe Work Condition	120.1	Part II, 2-1
Working On or Near Deenergized Electrical Conductors or Circuit Parts That Have Lockout/Tagout Devices Applied	120.2	Part II, 2-2
Lockout/Tagout Practices and Devices	120.3	Part II, 2-3
Temporary Protective Grounding Equipment	120.4	Part II, 3-4.2
Working On or Near Live Parts	Article 130	Part II, Chapter 2
Justification for Work	130.1	Part II, 2-1.1.1
Energized Electrical Work Permit	130.1(A)	New
Approach Boundaries to Live Parts	130.2	Part II, 2-1.3.4
Approach to Live Parts	130.2(B)	Part II, 2-1.3.3.2
Table for Approach Boundaries to Live Parts for Shock Protection	Table 130.2(B)	Part II, Table 2-1.3.4
Flash Hazard Analysis	130.3	Part II, 2-1.3.3
Test Instruments and Equipment Use	130.4	Part II, 4-1
Work On or Near Uninsulated Overhead Lines	130.5	Part II, 2-2
Other Precautions for Personnel Activities	130.6	New
Personal and Other Protective Equipment	130.7	Part II, Chapter 3
Standards for Personal Protective Equipment	130.7(C)(8)	Part II, 3-3.8
Table for Standards on Protective Equipment	Table 130.7(C)(8)	Part II, Table 3-3.8
Selection of Personal Protective Equipment	130.7(C)(9)	Part II, 3-3.9
Personal Protective Equipment Required for Various Tasks	130.7(C)(9)(a)	Part II, 3-3.9.1
Table for Hazard/Risk Category Classifications	Table 130.7(C)(9)(a)	Part II, Table 3-3.9.1
Protective Clothing and Personal Protective Equipment Matrix	130.7(C)(10)	Part II, 3-3.9.2
Table for Protective Clothing and Personal Protective Equipment (PPE) Matrix	Table 130.7(C)(10)	Part II, Table 3-3.9.2
Protective Clothing Characteristics	130.7(C)(11)	Part II, 3-3.9.3
Protective Clothing Characteristics	Table 130.7(C)(12)	Part II, Table 3-3.9.3
Factors in Selection of Protective Clothing	130.7(C)(12)	Part II, 3-3.9.4
Other Protective Equipment	130.7(D)	Part II, 3-4
Insulated Tools and Equipment	130.7(D)(1)	Part II, 2-3.7
Table for Standards on Other Protective Equipment	Table 130.7(F)	Part II, Table 3-4.11
Safety-Related Maintenance Requirements	Chapter 2	Part III
Introduction	Article 200	Part III, Chapter 1
General	200.1	Part III, 1-1
General Maintenance Requirements	Article 205	Part III, Chapter 2
Qualified Persons	205.1	Part III, 2-1
Single Line Diagram	205.2	Part III, 2-2
Spaces About Electrical Equipment	205.3	Part III, 2-3
Grounding and Bonding	205.4	Part III, 2-4
Guarding of Live Parts	205.5	Part III, 2-5
Safety Equipment	205.6	Part III, 2-6
Clear Spaces	205.7	Part III, 2-7
Identification of Components	205.8	Part III, 2-8

Copyright National Fire Protection Association
Provided by IHS under license with NFPA
No reproduction or networking permitted without license from IHS
Not for Resale

Table M.2 *Continued*

Topic	2004 Edition	2000 Edition
Warning Signs	205.9	Part III, 2-9
Identification of Circuits	205.10	Part III, 2-10
Single and Multiple Conductors and Cables	205.11	Part III, 2-11
Flexible Cords and Cables	205.12	Part III, 2-12
Substations, Switchgear Assemblies, Switchboards, Panelboards, Motor Control Centers, and Disconnect Switches	Article 210	Part III, Chapter 3
Enclosures	210.1	Part III, 3-1
Area Enclosures	210.2	Part III, 3-2
Conductors	210.3	Part III, 3-3
Insulation Integrity	210.4	Part III, 3-4
Protective Devices	210.5	Part III, 3-5
Premises Wiring	Article 215	Part III, Chapter 4
Covers for Wiring System Components	215.1	Part III, 4-1
Open Wiring Protection	215.2	Part III, 4-2
Raceways and Cable Trays	215.3	Part III, 4-3
Controller Equipment	Article 220	Part III, Chapter 5
Scope	220.1	Part III, 5-1
Protection and Control Circuitry	220.2	Part III, 5-2
Fuses and Circuit Breakers	Article 225	Part III, Chapter 6
Fuses	225.1	Part III, 6-1
Molded-Case Circuit Breakers	225.2	Part III, 6-2
Circuit Breaker Testing	225.3	Part III, 6-3
Rotating Equipment	Article 230	Part III, Chapter 7
Terminal Boxes	230.1	Part III, 7-1
Guards, Barriers, and Access Plates	230.2	Part III, 7-2
Hazardous (Classified) Locations	Article 235	Part III, Chapter 8
Scope	235.1	Part III, 8-1
Maintenance Requirements for Hazardous (Classified) Locations	235.2	Part III, 8-2
Batteries and Battery Rooms	Article 240	Part III, Chapter 9
Ventilation	240.1	Part III, 9-1
Eye and Body Wash Apparatus	240.2	Part III, 9-2
Cell Flame Arresters and Cell Ventilation	240.3	Part III, 9-3
Portable Electric Tools and Equipment	Article 245	Part III, Chapter 10
Maintenance Requirements for Portable Tools and Equipment	245.1	Part III, 10-1
Personal Safety and Protective Equipment	Article 250	Part III, Chapter 11
Maintenance Requirements for Personal Safety and Protective Equipment	250.1	Part III, 11-1
Inspection and Testing of Protective Equipment and Protective Tools	250.2	Part III, 11-2
Safety Grounding Equipment	250.3	Part III, 11-3
Safety Requirements for Special Equipment	Chapter 3	Part IV
Introduction	Article 300	Part IV, Chapter 1
Scope	300.1	Part IV, 1-1
Responsibility	300.2	Part IV, 1-2
Organization	300.3	Part IV, 1-3
Safety-Related Work Practices for Electrolytic Cells	Article 310	Part IV, Chapter 2
Scope	310.1	Part IV, 2-1
Definitions	310.2	Part IV, 2-2
Safety Training	310.3	Part IV, 2-3
Employee Training	310.4	Part IV, 2-4
Safeguarding of Employees in the Cell Line Working Zone	310.5	Part IV, 2-5
Portable Tools and Equipment	310.6	Part IV, 2-6
Safety Requirements Related to Batteries and Battery Rooms	Article 320	Part IV, Chapter 3
Scope	320.1	Part IV, 3-1
Definitions	320.2	Part IV, 3-2
Battery Connections	320.3	Part IV, 3-3
Installations of Batteries	320.4	Part IV, 3-4
Battery Room Requirements	320.5	Part IV, 3-5
Battery Enclosure Requirements	320.6	Part IV, 3-6
Protection	320.7	Part IV, 3-7

Copyright National Fire Protection Association
Provided by IHS under license with NFPA
No reproduction or networking permitted without license from IHS
Not for Resale

Table M.2 ***Continued***

Topic	2004 Edition	2000 Edition
Personnel Protective Equipment	320.8	Part IV, 3-8
Tools and Equipment	320.9	Part IV, 3-9
Safety Related Work Practices for Use of Lasers	Article 330	Part IV, Chapter 4
Scope	330.1	Part IV, 4-1
Definitions	330.2	Part IV, 4-2
Safety Training	330.3	Part IV, 4-3
Safeguarding of Employees in the Laser Operating Area	330.4	Part IV, 4-4
Employee Responsibility	330.5	Part IV, 4-5
Safety-Related Work Practices: Power Electronic Equipment	Article 340	Part IV, Chapter 5
Scope	340.1	Part IV, 5-1
Definition	340.2	Part IV, 5-4
Application	340.3	Part IV, 5-2
Reference Standards	340.4	Part IV, 5-3
Hazards Associated with Power Electronic Equipment	340.5	Part IV, 5-5
Hazards Associated with Power Electronic Equipment	340.6	Part IV, 5-6
Specific Measures for Personnel Safety	340.7	Part IV, 5-7
Installation Safety Requirements	Chapter 4	Part I
General Requirements for Electrical Installations	Article 400	Part I
Scope	400.1	Part I, 1-1
Approval	400.2	Part I, 1-2
Examination, Identification, Installation, and Use of Equipment	400.3	Part I, 1-3
Insulation Integrity	400.4	Part I, 1-3.3
Interrupting Rating	400.5	Part I, 1-3.4
Circuit Impedance and Other Characteristics	400.6	Part I, 1-3.5
Deteriorating Agents	400.7	Part I, 1-3.6
Mechanical Execution of Work	400.8	Part I. 1-3.7
Mounting and Cooling of Equipment	400.9	Part I, 1-3.8
Electrical Connections	400.10	Part I, 1-4
Flash Protection	400.11	New
Arcing Parts	400.12	Part I, 1-5
Marking	400.13	Part I, 1-6
Identification of Disconnecting Means	400.14	Part I, 1-7
600 Volts, Nominal, or Less	Section B	Part I, 1-8
Spaces about Electrical Equipment	400.15	Part I, 1-8.1
Guarding of Live Parts	400.16	Part I, 1-8.2
Over 600 Volts, Nominal	Section C	Part I, 1-9
General	400.17	Part I, 1-9.1
Enclosure for Electrical Installations	400.18	Part I, 1-9.2
Table for Minimum Distance from Fence to Live Parts	Table 400.18	Part I, Table 1-9.2
Work Space about Equipment	400.19	Part I, 1-9.3
Entrance and Access to Work Space	400.20	Part I, 1-9.4
Work Space and Guarding	400.21	Part I, 1-9.5
Wiring Design and Protection	Article 410	Part I, Chapter 2
Use and Identification of Grounded and Grounding Conductors	410.1	Part I, 2-1
Branch Circuits	410.2	Part I, 2-2
Identification of Ungrounded Conductors	410.3	Part I, 2-2.3
Ground-Fault Circuit-Interrupter Protection for Personnel	410.4	Part I, 2-2.4
Outlet Devices	410.5	Part I, 2-2.5
Cord Connections	410.6	Part I, 2-2.6
Outside Branch Circuit, Feeder, and Service Conductors, 600 Volts, Nominal, or Less	410.7	Part I, 2-3
Services	410.8	Part I, 2-4
Overcurrent Protection	410.9	Part I, 2-5
Grounding	410.10	Part I, 2-6
Wiring Methods, Components, and Equipment for General Use	Article 420	Part I, Chapter 3
Wiring Methods	420.1	Part I, 3-1
Cabinets, Cutout Boxes, and Meter Socket Enclosures	420.2	Part I, 3-2
Position and Connection of Switches	420.3	Part I, 3-3
Switchboards and Panelboards	420.4	Part I, 3-4
Enclosures for Damp or Wet Locations	420.5	Part I, 3-5

Copyright National Fire Protection Association
Provided by IHS under license with NFPA
No reproduction or networking permitted without license from IHS Not for Resale

Table M.2 ***Continued***

Topic	2004 Edition	2000 Edition
Conductor Identification	420.6	Part I, 3-6
Flexible Cords and Cables	420.7	Part I, 3-7
Portable Cables Over 600 Volts, Nominal	420.8	Part I, 3-8
Fixture Wires	420.9	Part I, 3-9
Equipment for General Use	420.10	Part I, 3-10
Specific Purpose Equipment and Installations	Article 430	Part I, Chapter 4
Electric Signs and Outline Lighting	430.1	Part I, 4-1
Cranes and Hoists	430.2	Part I, 4-2
Elevators, Dumbwaiters, Escalators, Moving Walks, Wheelchair Lifts, and Stairway Chair Lifts	430.3	Part I, 4-3
Electric Welders — Disconnecting Means	430.4	Part I, 4-4
Information Technology Equipment — Disconnecting Means	430.5	Part I, 4-5
X-Ray Equipment	430.6	Part I, 4-6
Induction and Dielectric Heating Equipment	430.7	Part I, 4-7
Electrolytic Cells	430.8	Part I, 4-8
Electrically Driven or Controlled Irrigation Machines	430.9	Part I, 4-9
Swimming Pools, Fountains, and Similar Installations	430.10	Part I, 4-10
Carnivals, Circuses, Fairs, and Similar Events	430.11	Part I, 4-11
Hazardous (Classified) Locations, Class I, II, and III, Divisions 1 and 2 and Class I, Zones 0, 1, and 2	Article 440	Part I, Chapter 5
Scope	440.1	Part I, 5-1
General	440.2	Part I, 5-2
Class I, Zone 0, 1, and 2 Locations	440.3	Part I, 5-4
Special Systems	Article 450	Part I, Chapter 6
Systems Over 600 Volts, Nominal	450.1	Part I, 6-1
Emergency Systems	450.2	Part I, 6-2
Class 1, Class 2, and Class 3 Remote Control, Signaling, and Power-Limited Circuits	450.3	Part I, 6-3
Fire Alarm Systems	450.4	Part I, 6-4
Communications Systems	450.5	Part I, 6-5
Solar Photovoltaic Systems	450.6	Part I, 6-6
Integrated Electrical Systems	450.7	Part I, 6-7
Tables, Notes, and Charts	Annex A	Appendix A
Referenced Publications	Annex B	Appendix A
Limits of Approach	Annex C	Part II, Appendix A
Sample Calculation of Flash Protection Boundary	Annex D	Part II, Appendix B
Electrical Safety Program	Annex E	Part II, Appendix C
Hazard/Risk Evaluation Procedure	Annex F	Part II, Appendix D
Annex G, Sample Lockout/Tagout Procedure	Annex G	Part II, Appendix D
Simplified, Two-Category, Flame-Resistant (FR) Clothing System	Annex H	Part II, Appendix F
Job Briefing and Planning Checklist	Annex I	New
Annex J, Energized Electrical Work Permit	Annex J	New
Annex K, General Categories of Electrical Hazards	Annex K	New
Annex L, Typical Application of Safeguards in the Cell Line Working Zone	Annex L	Part IV, Chapter 2, Appendix A
Annex M, Cross-Reference Tables	Annex M	New

Copyright National Fire Protection Association
Provided by IHS under license with NFPA
No reproduction or networking permitted without license from IHS
Not for Resale

Index

© 2004 National Fire Protection Association. All Rights Reserved.

The copyright in this index is separate and distinct from the copyright in the document that it indexes. The licensing provisions set forth for the document are not applicable to this index. This index may not be reproduced in whole or in part by any means without the express written permission of NFPA.

-A-

Accessible (as applied to wiring methods)
Definition, Art. 100–I
Accessible (as applied to equipment)
Definition, Art. 100–I
Over 600 volts, nominal, systems, 400.20(B)
Accessible, readily (readily accessible)
Battery enclosures, 320.5(A)(2)
Definition, Art. 100–I
Disconnecting means, motor, 420.10(E)(2)(d)
Subsurface enclosures, 400.8(B)
Accessories (definition), 320.2
Aerial lifts, 130.5(E)(1)
Air conditioning
Elevators, 430.3(F)
Information technology equipment, 430.5
Alternating current systems
Of less than 50 volts, 410.10(C)(3)
Of 50 volts to 1000 volts, 410.10(C)(4), 410.10(C)(5)
Of 1 kV and over, 410.10(C)(6)
Ampacity (definition), Art. 100–I
Appliances, 420.10(D)
At carnivals, circuses, fairs, 430.11(F)(2)
Definition, Art. 100–I
Disconnecting means, 420.10(D)(2)
Flexible cords and cables for, 420.7(B)(1)
Grounding, 410.10(E)(3)
Live parts, 420.10(D)(1)
Nameplate, 420.10(D)(3)
Approach distances;*see also* Boundary
Limits of, Annex C
Preparation for, C.1
Qualified persons, 130.2(C), C.1.2
Unqualified persons, 130.2(D), 130.5(D), C.1.1
Approved (definition), Art. 100–I
Arc-blast, K.4
Arc-flash, K.3; *see also* Flash hazard; Flash hazard analysis; Flash protection boundary; Flash suit
Arcing parts
Electrical installations, 400.12
Overcurrent protection, 410.9(A)(4)
Arc rating (definition), Art. 100–I
Arc welders, 430.4(A)
Armored cable (definition), Art. 100–I
Assured equipment grounding conductor program, 410.4(B)(2)(b)
Attachment plug (plug cap) (plug), 110.9(B)(2)(b), 110.9(B)(3)(c), 110.9(B)(4), 410.6, 420.10(C)
Assured equipment grounding conductor program, temporary wiring, 410.4(B)(2)(b)
Definition, Art. 100–I
Flexible cords equipped with, 420.7(B)(2)
Attendants, to warn and protect employees, 130.7(E)(3)
Authorized person
Battery rooms or areas restricted to, 320.5(A)
Definition, 320.2
Automatic (definition), Art. 100–I

-B-

Bare hand work, 130.2(C)(3)
Definition, Art. 100–I
Barricades, 130.7(E)(2)
Definition, Art. 100–I
Barriers
Batteries, 320.5(E)
Definition, Art. 100–I
Electrolytic cells, safe work practices, 310.5(D)(3)
Physical or mechanical, 130.6(F), 130.7(D)(1)(i)
Rotating equipment, 230.2
Bathroom (definition), Art. 100–I
Batteries
Connections, 320.3
Definition, 320.2
Installations, 320.4
Maintenance requirements, safety-related, Art. 240
Personal protective equipment (PPE), use of, 320.7(F)(3), 320.8
Protection, 320.7
Safety requirements, Art. 320
Sealed
Definition, 320.2
Ventilation, 320.4(E)
Secondary (definition), 320.2
Storage, 420.10(H)
Tools and equipment, use of, 320.9
Valve regulated (definition), 320.2
Vented
Definition, 320.2
Ventilation, 320.4(C)
VRLA (valve-regulated lead-acid storage battery)
Definition, 320.2
Ventilation, 320.4(D)
Battery effect (definition), 310.2
Battery enclosures
Definition, 320.2
Protective equipment, 320.7(A)(3)
Requirements, 320.5(A)(2), 320.6
Battery rooms
Definition, 320.2
Requirements, 320.5
Battery terminals, 320.3(C)(1), 320.3(E)
Takeoff, 320.3(E), 320.5(C), 320.5(D), 320.6(B)
Blind reaching, electrical safety program, 130.6(B)
Body wash apparatus, 240.2
Bonding (bonded)
Carnivals, circuses, fairs, equipment at, 430.11(G)
Communications systems, 450.5(D)(4)
Definition, Art. 100–I
Enclosures, 420.1(A)
Fixed and portable electrical equipment, electrolytic cells, 430.8(G)(5)
Grounded conductor, 410.10(C)(7)(c)
Grounding equipment methods, 410.10(B)
Hazardous (classified) locations, 440.4(G)
Maintenance of, 205.4
Tunnel installations, 450.1(I)(8)
Bonding jumper (definition), Art. 100–I
Boundary; *see also* Approach distances
Approach boundaries to live parts, 130.2, Table 130.2(C), C.1.1, C.1.2
Flash protection. *see* Flash protection boundary
Shock protection, 130.1(A)(2), 130.2(B)
Branch circuits, 410.2
Cord connectors, 410.2(B)
Definition, Art. 100–I
Extension, equipment grounding conductor of, 410.10(D)(3)
Ground-fault circuit-interrupter protection, 410.4
Identification of ungrounded circuits, 410.2(A)
Lampholders, 410.5(A)
Motors, overload protection, 420.10(E)(2)(f)
Over 600 volts, nominal, overcurrent protection, 410.9(B)
Receptacles, 410.2(B), 410.5(B)
Temporary wiring, 420.1(B)(2)(b)
Building (definition), Art. 100–I
Busbars
Battery, 320.3(C)(1), 320.3(C)(3), 320.3(E)
Outgoing, 320.5(C), 320.5(D), 320.6(B)
Integrity of, 400.8(C)
Systems over 600 volts, nominal, 450.1(A)
Busways, battery, 320.3(C)(1), 320.3(C)(4)

-C-

Cabinets, 420.2
Cables, 420.2(A)(3)
Conductors entering, 420.2(A)
Damp or wet locations, 420.5(A), 420.5(B)
Definition, Art. 100–I
Metal, 420.2(A)(2)
Openings to be closed, 420.2(A)(1)
Panelboards in, 420.4, 420.5(B)
Cable
Armored cable (definition), Art. 100–I
Battery, 320.3(C)(1), 320.3(C)(2)
Outgoing, 320.5(C), 320.5(D), 320.6(B)
In cabinets, cutout boxes, and meter socket enclosures, 420.2(A)(3)
Flexible. *see* Flexible cords and cables
Hazardous (classified) locations, 440.3(B)(1)
Maintenance of, 205.11
Medium voltage cable. *see* Medium voltage cable
Metal-clad
Definition, Art. 100–I
Tunnel installations, 450.1(I)(2)
Mineral-insulated metal-sheathed cable (definition), Art. 100–I
Nonmetallic-sheathed (definition), Art. 100–I
Openings, closing of unused, 400.8(A)
Portable cables, over 600 volts, nominal. *see* Portable cables, over 600 volts, nominal

Copyright National Fire Protection Association
Provided by IHS under license with NFPA
No reproduction or networking permitted without license from IHS
Not for Resale

Power and control tray cable (definition), Art. 100–I
Power-limited tray cable (definition), Art. 100–I
Service cable (definition), Art. 100–I
Service-entrance cable. *see* Service-entrance cable
Tunnel installations, 450.1(I)(2), 450.1(I)(3)
Cablebus (definition), Art. 100–I
Cable trays
Bonding of, 420.1(A)(1)
Maintenance, 215.3
Uses, 420.1(C)(1), 420.1(C)(4)
Wiring methods, 420.1(C)(2)
Canopies. *see* Covers and canopies
Capacitors, 420.10(G)
Capacity (definition), 320.2
Car frames, metal, grounded, 410.10(F)(2)
Carnivals, electrical installations at, 430.11
Ceiling fans, over swimming pools, 430.10(C)
Cell
Definition, 320.2
Electrolytic. *see* Electrolytic cell
Cell flame arresters, 240.3
Cell line. *see* Electrolytic cell line
Charging (definition), 320.2
Circuit breakers
Definition, Art. 100–I, Art. 100–II
Elevators, escalators, dumbwaiters, moving walks, wheelchair lifts, and stairway chair lifts, 430.3(A)(4), 430.3(E)
Molded-case, 225.2
Overcurrent protection, 410.9(A)(4), 410.9(A)(5)
Over 600 volts, nominal, 410.9(B)(1)(a), 450.1(E)(1)
Photovoltaic systems, 450.6(C)(2)
Reclosing circuits after operation, 130.6(K)
Routine opening and closing of circuits, 130.6(J)
Safety-related maintenance requirements, Art. 225
Series combination ratings, 400.14
Testing, 225.3
Circuit protective devices; *see also* Circuit breakers; Disconnecting means; Fuses; Overcurrent protection
Communications systems, 450.5(B), 450.5(D)
Reclosing circuits after protective device operation, 130.6(K)
Circuits; *see also* Branch circuits
Battery compartment, 320.6(C)
Deenergized, 120.1; *see also* Electrically safe work condition
Energized, working on or near parts that are or might become, 110.8; *see also* Working near or on live parts
Identification, maintenance of, 205.10
Impedance, 120.3(D), 400.6
Of 1 kV and over, grounding, 410.10(G)
Reclosing after protective device operation, 130.6(K)
Routine opening and closing of, 130.6(J)
Circuses, electrical installations at, 430.11
Class 1, Class 2, and Class 3 remote control, signaling, and power-limited circuits, 450.3
Class III locations
Class III, Division 1 (definition), Art. 100–I
Class III, Division 2 (definition), Art. 100–I
Definition, Art. 100–I
Class II locations
Class II, Division 1 (definition), Art. 100–I
Class II, Division 2 (definition), Art. 100–I
Definition, Art. 100–I
Class I locations
Class I, Division 1, 440.3(B)(4), 440.4(E)(3)(a)
Definition, Art. 100–I
Class I, Division 2, 440.3(B), 440.4(E)(3)(a)
Definition, Art. 100–I
Class I, Zone 0, 1, and 2, 440.4
Definition, Art. 100–I
Equipment, 440.4(E)
Special precautions, 440.4(C)
Temperature, 440.4(D)
Threading, 440.4(B)
Definition, Art. 100–I
Combustible dust
Classified locations for, 440.1, 440.3(B)(6)
Occasional presence of, 130.6(H)
Communications systems, 450.5
Concealed (definition), Art. 100–I
Conductive (definition), Art. 100–I
Conductors; *see also* Grounded conductors; Grounding conductors; Service-entrance conductors
Approval, 400.2
Bare (definition), Art. 100–I
Clearance
Building openings, 410.7(C)
From buildings for conductors of not over 600 volts, nominal, 410.7(D)
Ground, 410.7(B)
Communication systems, 450.5(C), 450.5(D)
Connections, 400.10
Covered (definition), Art. 100–I
Deenergized, 120.1; *see also* Electrically safe work condition
Electrolytic cell line, 430.8(C)(1)
Energized, working on or near conductors that are or might become, 110.8; *see also* Working near or on live parts
Entering boxes, cabinets, and meter socket enclosures, 420.2(A)
Identification. *see* Identified/identification
Insulated
Braid-covered insulated conductors—open installations, systems over 600 volts, nominal, 450.1(B)
Definition, Art. 100–I
Integrity of insulation, maintenance of, 210.4
Location of outdoor lamps, 410.7(E)
Maintenance of, 205.11, 210.3
Multiconductors, wiring methods, cable trays, 420.1(C)(3)(b)
Open, use at carnivals, circuses, fairs, of, 430.11(D)(3)
Overcurrent protection, 410.9(A)(1), 410.9(A)(2)
Photovoltaic systems, 450.6(B), 450.6(C)(1)
On poles, 410.7(A), 450.5(C)(1)
Portable cables, over 600 volts, nominal, 420.8(A)(1), 420.8(A)(3), 420.8(C)
Power-limited/non-power-limited fire alarm conductor locations, 450.4(C), 450.4(D)
Service
Definition, Art. 100–I
Outside, 600 volts, nominal, or less, 410.7
Single
Carnivals, circuses, fairs, use at, 430.11(D)(2)
Wiring methods, cable trays, 420.1(C)(3)(a)
Supports, open wiring on insulators, 420.1(D)(2)
Tunnel installations, 450.1(I)(2) to (4)
Ungrounded, identification, 410.2(A), 410.3
Conduit bodies (definition), Art. 100–I
Connections
Grounding, 410.10(D)
Identification, installation, and use, 400.10
Polarity, 410.1(B)
Constant current charge (definition), 320.2
Constant voltage charge (definition), 320.2
Container (definition), 320.2
Controllers; *see also* Motor controllers
Definition, Art. 100–I
Photovoltaic systems, 450.6(A)
Cooking unit, counter-mounted (definition), Art. 100–I
Cord-and-plug-connected equipment, 110.9(B)
Conductive work locations, 110.9(B)(3)(d)
Connecting attachment plugs, 110.9(B)(4)
Grounding, 410.10(E)(5)
Grounding-type equipment, 110.9(B)(2)
Handling, 110.9(B)(1)
Receptacle, 410.2(B)(5)
Swimming pools, fountains, and similar installations, 430.10(C)(5)
Visual inspection, 110.9(B)(3)
Cord connectors, 410.6, 420.10(C)
Branch circuits, 410.2(B)
Carnivals, circuses, fairs, use at, 430.11(D)(4), 430.11(D)(5)
Cords, flexible. *see* Flexible cords and cables
Corrosive vapors, locations subject to, 420.1(D)(3)(b)
Covers and canopies, 215.1, 420.2(B)
Exposed combustible wall or ceiling finish, 420.2(B)(2)
Flexible cord pendants, 420.2(B)(3)
Nonmetallic or metal covers and plates, 420.2(B)(1)
Cranes, 430.2
Clearance, 430.2(C)
Disconnecting means, 430.2(A)
Electrolytic cells, 310.5(D)(9), 430.8(I)
Flexible cords and cables for, 420.7(B)(1)
Limit switches, 430.2(B)
Cutout
Definition, Art. 100–II
Over 600 volts, nominal, system
Distribution cutouts, 450.1(E)(3)
Separation from, 400.21(B)
Portable cutout type switches, 310.5(D)(8)
Cutout boxes, 420.2
Cables, 420.2(A)(3)
Covers and canopies, 420.2(B)
Damp or wet locations, 420.5(A)
Definition, Art. 100–I
Metal, 420.2(A)(2)
Openings to be closed, 420.2(A)(1)
Panelboards in, 420.4

Copyright National Fire Protection Association
Provided by IHS under license with NFPA
No reproduction or networking permitted without license from IHS
Not for Resale

-D-

Damp locations. *see* Locations
Dead front (definition), Art. 100–I
Deenergized; *see also* Electrically safe work condition
  Definition, Art. 100–I
  Process to deenergize equipment, 120.2(F)(2)(a)
  Testing of parts, 120.1
  Uninsulated overhead lines, 130.5(B)
  Working on or near deenergized conductors or circuit parts that have lockout/tagout devices applied, 120.1, 120.2
Definitions, Art. 100
  Electrolytic cell, 310.2, 430.8(B)
  Hazardous (classified) locations, 440.2
  Lockout/tagout practices and devices, 120.2(F)(2)(k)
  Over 600 volts, nominal, Art. 100–II
  Power electronic equipment, 340.2
Deteriorating agents, 400.7
Device (definition), Art. 100–I
Dielectric heating (definition), Art. 100–I
Dielectric heating equipment, 430.7
  Access to internal equipment, 430.7(B)(3)
  Disconnecting means, 430.7(B)(6)
  Enclosures, 430.7(B)(1)
  Guarding and grounding, 430.7(B)
  Panel controls, 430.7(B)(2)
  Remote control, 430.7(C)
  Warning labels, 430.7(B)(4)
  Work applicator shielding, 430.7(B)(5)
Diffraction-type equipment, 430.6(C)(2)
Discharging (definition), 320.2
Disconnecting means, 120.1, 120.2(F)(2)(c)
  Appliances, 420.10(D)(2)
  Capacitors, 420.10(G)(2)(b)
  Carnivals, circuses, fairs, use at, 430.11(E)(1)
  Cranes, 430.2(A)
  Definition, Art. 100–I, Art. 100–II
  Dielectric heating equipment, 430.7(B)(6)
  Electric signs, 430.1
  Electric welders, 430.4
  Electrolytic cells, 430.8(D)
  Elevators, escalators, dumbwaiters, moving walks, wheelchair lifts, and stairway chair lifts, 430.3
  Fuses, 410.9(A)(3)
  Hoists, 430.2(A)
  HVAC systems, 430.5
  Identification, 400.14
  Induction heating equipment, 430.7(B)(6)
  Information technology equipment, 430.5
  Irrigation machines, 430.9(B)
  Lockout/tagout devices, use of, 120.2(D)(1), 120.2(E)(3), 120.2(E)(4)(d), 120.2(E)(6)
  Motors, 420.10(E)(2)
  Outline lighting, 430.1
  Photovoltaic systems, 450.6(C)
  Routine opening and closing of circuits, 130.6(J)
  Series combination ratings, marking of, 400.14
  Service equipment, 410.8(A)
  Temporary wiring general requirements, 420.1(B)(2)(d)
  Tunnel installations, 450.1(I)(7)
Disconnecting (or isolating) switches (disconnector, isolator); *see also* Disconnecting means
  Definition, Art. 100–I, Art. 100–II
  Safety-related maintenance requirements, Art. 210
Double-throw knife switches, 420.3(B)
Dry locations.*see* Locations
Dry-type transformers, wiring for installation indoors, 420.10(F)(3)
Ducts, wiring in, 420.1(A)(3)
Dumbwaiters
  Disconnecting means, 430.3
  Interconnection multicar controllers, 430.3(D)
  Motor controllers, 430.3(H)
  Warning signs, 430.3(C)
Dust
  Combustible
    Classified locations for, 440.1, 440.3(B)(6)
    Occasional presence of, 130.6(H)
  Ducts for, wiring of, 420.1(A)(3)
Dusttight equipment, 440.3(D) Ex. 4

-E-

Effective ground-fault current path (definition), Art. 100–I
Effectively grounded equipment, 410.10(F)
Electrical hazard; *see also* Flash hazard; Shock hazard
  Analysis, 110.8(B)(1)
  Categories of
    General, Annex K
    Personal protective equipment required for. *see* Personal protective equipment (PPE)
  Definition, Art. 100–I
  Hazard/risk evaluation procedure, 110.7(F), Annex F
Electrical installations, Chap. 4
  Approval, 400.2
  Arcing parts, 400.12
  Circuit impedance and other characteristics, 400.6
  Deteriorating agents, 400.7
  Electrical connections, 400.10
  Examination, installation, and use of equipment, 400.3
  Flash protection, 400.11
  General requirements, Art. 400 Part I
  Hazardous (classified) locations, Art. 440
  Identification of disconnecting means, 400.14
  Insulation integrity, 400.4
  Interrupting rating, 400.5
  Marking, 400.13
  Mechanical execution of work, 400.8
  Mounting and cooling of equipment, 400.9
  Over 600 volts, nominal, Art. 400 Part III
  600 volts, nominal, or less, Art. 400 Part II
  Special systems, Art. 450
  Splices, 400.10
  Swimming pools, fountains and similar installations, 430.10
  Terminals, 400.10
Electrically safe work condition, Art. 120
  Definition, Art. 100–I
  Lockout/tagout practices and devices, 120.1, 120.2
  Process to achieve, 120.1
  Temporary protective grounding equipment, 120.3
Electrical safety (definition), Art. 100–I
Electrical safety program, 110.7, Annex E
  Awareness and self-discipline, 110.7(B)
  Controls, 110.7(D), E.2
  General, 110.7(A)
  Hazard/risk evaluation procedure, 110.7(F)
  Job briefing, 110.7(G)
  Multi-employer relationship, 110.4
  Principles, 110.7(C), E.1
  Procedures, 110.7(E), E.3
  Repetitive or similar task, briefing for, 110.7(G)(2)
  Safety interlocks, 110.8(B)(4)
Electrical single-line diagram (definition), Art. 100–I
Electric signs, 430.1
  Definition, Art. 100–I
  Disconnecting means, 430.1
  Emergency power systems, 450.2(D)
  Flexible cords and cables for, 420.7(B)(1)
  Location, 430.1(B)
Electric welders, disconnecting means, 430.4
Electrolyte (definition), 320.2
Electrolyte density (definition), 320.2
Electrolytic cell, Art. 310, 430.8
  Auxiliary nonelectric connections, 310.6(B), 430.8(H)
  Definitions, 310.2, 430.8(B)
  Disconnecting means, 430.8(D)
  Employee training, 310.3, 310.4, 310.5(D)(6)
Electrolytic cell line, 430.8(C)
  Attachments and auxiliary equipment, 310.5(D)(10)
    Definition, 430.8(B)
  Definition, 430.8(B)
Electrolytic cell line working zone, 430.8(C)(3), 430.8(C)(4)
  Cranes and hoists, 310.5(D)(9), 430.8(I)
  Definition, 430.8(B)
  Employee training, 310.3, 310.4(A), 310(4)(B)(2), 310.5(D)(6)
  Portable equipment and tools, use of, 310.6
    Fixed electric equipment, 430.8(G)
    Portable electric equipment, 310.6(A), 430.8(E) to (G)
  Safeguards, employee, 310.5, Annex L
Elevated equipment, 130.5(E)(1)
Elevators
  Disconnecting means, 430.3
  Interconnection multicar controllers, 430.3(D)
  Motor controllers, 430.3(H)
  Warning signs, 430.3(C)
Emergency power systems, 450.2
  Emergency illumination, 450.2(C)
  Signs, 450.2(D)
  Wiring methods, 450.2(B)
Emergency procedures, training in, 110.6(C)
Employees
  Electrical safety program, 110.7
  Lockout/tagout procedure, 120.2(B)(1), 120.2(B)(2)
  Responsibilities, 110.3, 130.5(C)
    Lasers, 330.5
    Power electronic equipment, 340.7(B)
    Special equipment, 300.2
  Safeguarding. *see* Safeguarding
  Training. *see* Training, employees
Employers
  Electrical safety program, 110.7
  Responsibilities, 110.3, 110.4
    Lockout/tagout procedure, 120.2(C)(1)
    Power electronic equipment, 340.7(A)
    Special equipment, 300.2
    Uninsulated overhead lines, work on or near, 130.5(C)
Enclosed (definition), Art. 100–I
Enclosures
  Arcing parts, 400.12
  Battery. *see* Battery enclosures

Copyright National Fire Protection Association
Provided by IHS under license with NFPA
No reproduction or networking permitted without license from IHS
Not for Resale

To be grounded, 410.10(E)
Damp or wet locations, 420.5
Definition, Art. 100–I
Dielectric heating equipment, 430.7(B)(1)
Explosionproof, 440.3(B)(1)
Induction heating equipment, 430.7(B)(1)
Maintenance of, 205.5, 210.1, 210.2
Over 600 volts, nominal, systems, 400.18, 400.21(C), 410.8(B)(1)
Mobile and portable equipment, 450.1(H)
Panelboards in, 420.4
Series combination ratings, marking of, 400.14
Service equipment
Grounding, 410.10(E)(2)
Protection of, 400.21(F)
Subsurface, access to, 400.8(B)
Tunnel installations, 450.1(I)(5), 450.1(I)(6)
Energized; *see also* Live parts
Definition, Art. 100–I
Energized electrical work permit, 110.8(B)(2), 130.1(A), Annex J
Equipment; *see also* Electrical installations; specific equipment
Batteries, for work on, 320.9
Definition, Art. 100–I
Grounding, 410.10(G)(3)
Carnivals, circuses, fairs, equipment at, 430.11(H)
Cord-and-plug-connected equipment, 410.10(E)(5)
Fixed equipment, 410.10(E)(4)
High-voltage equipment, 410.10(G)
Induction heating equipment, 430.7(B)
Nonelectric equipment, 410.10(E)(6)
Portable or mobile equipment, 410.10(G)(2)
Ranges and clothes dryers, 410.10(E)(3)
Service equipment, 410.10(E)(1), 410.10(E)(2)
Vehicle or mechanical equipment, 130.5(E)(3)
For hazardous (classified) locations
Class I, Zone 0, 1, and 2 locations, 440.4(E)
Flammable gases and dusts, presence of, 440.3(B)(6)
Identification/marking, 440.3(B)(1), 440.3(D), 440.4(D), 440.4(E)(3)
Normal operating conditions, 440.3(B)(5)
Sealed equipment, 440.3(B)(4)
High-voltage. *see* High-voltage equipment
Overcurrent protection, 410.9(A)(1)
Spaces about, maintenance of, 205.3, 205.7
Special. *see* Special equipment
Use of, 110.9
Equipment grounding conductors. *see* Grounding conductors
Escalators
Disconnecting means, 430.3
Motor controllers, 430.3(H)
Warning signs, 430.3(C)
Explosionproof apparatus (definition), Art. 100–I
Explosionproof enclosures, 440.3(B)(1)
Exposed (as applied to live parts) (definition), Art. 100–I
Exposed (as applied to wiring methods) (definition), Art. 100–I
Exposed (circuit)
Definition, Art. 100–I
Safety-related work practices, 110.8(A)
Extension cords. *see* Flexible cord sets
Externally operable (definition), Art. 100–I
Eye wash apparatus, 240.2

-F-

Faceplates for flush-mounted snap switches, 420.3(D)(1)
Fail safe (definition), 330.2
Fail safe safety interlock (definition), 330.2
Fairs, electrical installations at, 430.11
Feeders
Definition, Art. 100–I
Outside, 600 volts, nominal, or less, 410.7
Over 600 volts, nominal, overcurrent protection, 410.9(B), 410.9(C)
Temporary wiring, 420.1(B)(2)(a)
Fiberglass-reinforced plastic rods, 130.7(D)(1)(d)
Fiber or flyings, combustible
Classified locations for, 440.1
Occasional presence of, 130.6(H)
Fire alarm systems, 410.10(C)(2), 450.4
Fittings
Bonding of, 420.1(A)(1)
Carnivals, circuses, fairs, use at, 430.11(D)(8)
Definition, Art. 100–I
Hazardous (classified) locations, 440.3(B)(1), 440.3(D) Ex. 1, 440.4(B)
Portable cables, over 600 volts, nominal, 420.8(E)
Fixed electric equipment
Electrolytic cells, 430.8(G)
Grounding, 410.10(E)(4)
Fixture wires, 420.9
Flame-arrested vent plug (definition), 320.2
Flame-resistant (FR) (definition), Art. 100–I
Flame-resistant clothing, 130.3(B), 130.7(C)(2), 130.7(C)(5), 130.7(C)(11), 130.7(C)(12), 130.7(C)(14) to (16), Annex H; *see also* Flash suit
Flammable gases
Classified locations for, 440.1, 440.3(B)(6)
Occasional presence of, 130.6(H)
Flammable liquids
Classified locations for, 440.1
Occasional presence of, 130.6(H)
Flash hazard
Definition, Art. 100–I
Protection from, 400.11; *see also* Flash protective equipment,
Flash hazard analysis, 110.8(B)(1)(b), 130.3, 130.7(C)(9)(a)
Definition, Art. 100–I
Electrolytic cell line working zones, 310.5(C)
Flash protection boundary, 130.1(A)(2), 130.2, Table 130.2(C), 130.3, C.1.1, C.1.2
Calculations, 130.3(A), Annex D
Definition, Art. 100–I
Protective equipment, use of, 130.7(C)(10), C.1.2.1, C.1.2.3, C.1.2.4
Flash protective equipment, 130.7(C)(10), 130.7(C)(12), 130.7(C)(13), 130.7(C)(16), C.1.2.1, C.1.2.3, C.1.2.4
Flash suit, 130.7(C)(13)(a), 130.7(C)(16)
Definition, Art. 100–I
Flexible cords and cables, 410.6, 420.7
Carnivals, circuses, fairs, use at, 430.11(D)(1), 430.11(D)(4), 430.11(D)(7)
Grounding-type utilization equipment, 110.9(B)(2)(a)
Handling, 110.9(B)(1)
Identification, 420.7(E)(1)
Maintenance of, 205.12
Pull at joints and terminals, 420.7(E)(3)
In show windows and show cases, 420.7(D)
Splices, 420.7(E)(2)
Suitability, 420.7(A)
Temporary wiring
Protection from accidental damage, 420.1(B)(2)(g)
Supports, 420.1(B)(2)(i)
Termination at devices, 420.1(B)(2)(h)
Uses, 420.7(B), 420.7(C)
Flexible cord sets, 110.9(B)
Assured equipment grounding conductor program, temporary wiring, 410.4(B)(2)(b)
Conductive work locations, 110.9(B)(3)(d)
Connecting attachment plugs, 110.9(B)(4)
Visual inspection, 110.9(B)(3)
Fluoroscopic-type equipment, 430.6(C)(1)
Fountains, electrical installations, 430.10
Fuses, 130.6(J)
Definition, Art. 100–I, Art. 100–II
Disconnecting means for, 410.9(A)(3)
Fuse or fuse-holding handling equipment, 130.7(D)(1)(b)
Personnel, protection of, 410.9(A)(4)(a)
Safety-related maintenance requirements, 225.1
Series combination ratings, 400.14
Systems over 600 volts, nominal, 450.1(E)(2), 450.1(E)(3)

-G-

Gases, flammable, 130.6(H), 440.1, 440.3(B)(6)
Gassing (definition), 320.2
Ground (definition), Art. 100–I
Grounded (definition), Art. 100–I
Grounded, effectively (definition), Art. 100–I
Grounded conductors
Bonding, 410.10(C)(7)(c)
Definition, Art. 100–I
Emergency power sources, sign indicating, 450.2(D)(2)
Identification, 410.1(A), 420.6(A)
Overcurrent protection, 410.9(A)(2)
Use, 410.1
Ground fault (definition), Art. 100–I
Ground-fault circuit-interrupters
Branch circuits, receptacles, 410.2(B)(4)(b)
Carnivals, circuses, fairs, receptacles at, 430.11(F)
Definition, Art. 100–I
Personnel, protection of, 410.4
Swimming pools, fountains, and similar installations, 430.10(F)
Lighting fixtures, lighting outlets, and ceiling-suspended fans, 430.10(C)(4)

--`,,`,,`-`-`,,`,,`,`,,`---

Copyright National Fire Protection Association
Provided by IHS under license with NFPA
No reproduction or networking permitted without license from IHS
Not for Resale

Receptacles, 430.10(B)(3)
Underwater equipment, 430.10(E)(2)
Temporary wiring, 410.4(B)(2)(a)
Testing, 110.9(C)
Ground-fault current path (definition), Art. 100–I
Ground-fault protection
Batteries, 320.3(F), 320.7(C)
Personnel, for, 410.4
Receptacle outlets, 410.4(B)
Temporary wiring installations, 410.4(B)
Grounding, 120.1, 410.10
Alternating current systems, 410.10(C)(3) to (6)
Appliances, 410.10(E)(3)
Batteries, 320.3(F)
Bonding, general, 410.10(B)
Carnivals, circuses, fairs, equipment at, 430.11(H)
Communications systems, 450.5(D)
Connections, 410.10(D)
Cord-and-plug-connected equipment, 410.10(E)(5)
Dielectric heating equipment, 430.7(B)
Electrolytic cell line, 430.8(C)(3)
Emergency power sources, sign indicating, 450.2(D)(2)
Enclosures, raceway, and service cable, 410.10(E)
Equipment. *see* Equipment.
Hazardous (classified) locations, 440.4(G)
Induction heating equipment, 430.7(B)
Lockout/tagout procedures, 120.2(F)(2)(g)
Maintenance of, 205.4
Nonelectric equipment, 410.10(E)(6)
Portable and vehicle-mounted generators, 410.10(C)(7)
Portable hand lamps, 410.10(E)(5)
Safety grounding equipment, maintenance of, 250.3
Snap switches, 420.3(D)(2)
Systems, 410.10(C)
1 kV and over (high voltage), 410.10(G)
Over 600 volts, nominal, 450.1(I)(4)
Portable equipment, 410.10(G)(2)
Tunnel installations, 450.1(I)(8)
Grounding conductors
Assured equipment grounding conductor program, 410.4(B)(2)(b)
Bonding, 420.1(A)(1)
Carnivals, circuses, and fairs, 430.11(I)
Communications systems, 450.5(D)(1)
Definition, Art. 100–I
Equipment, 110.9(B)(2)(a), 410.10(D)(3)
Definition, Art. 100–I
Identification, 420.6(B)
Portable cables, over 600 volts, nominal, 420.8(A)(3)
Tunnel installations, 450.1(I)(4)
Wiring methods, cable trays, 420.1(C)(3)(c)
Portable cables, over 600 volts, nominal, 420.8(A)(3), 420.8(C)
Use and identification, 410.1
Grounding electrode conductors, 410.10(D)(1), 410.10(D)(2)
Communications systems, 450.5(D)(2) to (4)
Definition, Art. 100–I
Emergency power sources, sign indicating, 450.2(D)(2)
Grounding-type equipment, 110.9(B)(2)
Guarded, 205.5; *see also* Barriers; Enclosures
Carnivals, circuses, fairs, service equipment at, 430.11(C)
Definition, Art. 100–I
Dielectric heating equipment, 430.7(B)
Induction heating equipment, 430.7(B)
Motors, live parts of, 420.10(E)(2)(g), 420.10(E)(2)(h)
Over 600 volts, nominal, system work spaces, 400.20(A)(2), 400.21, 410.8(B)(1)
Rotating equipment, 230.2
600 volts, nominal, or less, live parts, 400.16
Against accidental contact, 400.16(A)
Prevention of physical damage, 400.16(B)
Warning signs, 400.16(C)
Uninsulated overhead lines, 130.5(B), 130.5(C)

-H-

Handlines, 130.7(D)(1)(c)
Hazardous (classified) locations, Art. 440
Approval for class and properties, 440.3(B)
Class I. *see* Class I locations
Class II. *see* Class II locations
Class III. *see* Class III locations
Definitions, 440.2
Documentation, 440.3(A), 440.4(F)
Marking, 440.3(D), 440.4(D), 440.4(E)(3)
Safety-related maintenance requirements, Art. 235
Sealed equipment, 440.3(B)(4)
Wiring methods, cable trays, 440.3(B)(1)
Hazards. *see* Electrical hazard
Health care facilities (definition), Art. 100–I
Heating equipment
Definition, Art. 100–I
Dielectric. *see* Dielectric heating
Elevators, 430.3(F)
High-voltage space heaters, systems over 600 volts, nominal, 450.1(G)(3)
Induction. *see* Induction heating
High-voltage equipment
One kV or over, grounding of, 410.10(G)
Systems over 600 volts, nominal
Accessibility, 450.1(G)(1)
Instrument or control transformers and space heaters, 450.1(G)(3)
Hoists, 430.2
Clearance, 430.2(C)
Disconnecting means, 430.2(A)
Electrolytic cells, 310.5(D)(9), 430.8(I)
Flexible cords and cables for, 420.7(B)(1)
Limit switches, 430.2(B)
Monorail, 430.2(A)(2)
Hoistway (definition), Art. 100–I
Hot tubs, electrical installations, 430.10(A)
HVAC systems, disconnecting means, 430.5

-I-

Identified/identification;*see also* Marking
Conductors, 410.1(A), 410.2(A), 410.3, 420.6
Definition, Art. 100–I
Disconnecting means, 400.14
Electrical connections, 400.10
Fire alarm circuits, 450.4(G)
Flexible cords and cables, 420.7(E)(1)
Hazardous (classified) locations, equipment for, 440.3(B)(1)
Maintenance of, 205.8
Illumination
Battery rooms, 320.5(F), 320.5(G)
Emergency power systems, 450.2(C)
Working on or near live parts, 130.6(C)
Working spaces, over 600 volts, nominal, systems, 400.21(D)
Implanted pacemakers and metallic medical devices, 310.5(D)(11)
Incident energy (definition), Art. 100–I
Induction heating (definition), Art. 100–I
Induction heating equipment, 430.7
Access to internal equipment, 430.7(B)(3)
Disconnecting means, 430.7(B)(6)
Enclosures, 430.7(B)(1)
Guarding and grounding, 430.7(B)
Panel controls, 430.7(B)(2)
Remote control, 430.7(C)
Warning labels, 430.7(B)(4)
Work applicator shielding, 430.7(B)(5)
Industrial control panels, 400.11
Industrial occupancies
Furnaces, grounding of electrical systems for, 410.10(C)(5)
Hazardous (classified) locations, documentation for, 440.4(F)
Wiring methods, cable trays, 420.1(C)(3)
Information technology equipment, disconnecting means, 430.5
Inspection, visual
Cord-and-plug-connected equipment, 110.9(B)(3)
Safety and protective equipment, 250.2(A)
Safety grounding equipment, 250.3(A)
Test instruments and equipment, 110.9(A)(3)
Installation. *see* Electrical installations
Insulated (definition), Art. 100–I
Insulated conductors. *see* Conductors
Insulation, L.1
Electrolytic cells, 310.5(D)(1)
Integrity, 400.4
Moisture or mechanical protection, metal-sheathed cable, 450.1(D)
Shielding, 450.1(C)
Integrated electrical systems, 450.7
Intercell and interrow connection (definition), 320.2
Intercell connector safety cover (definition), 320.2
Interlocks. *see* Safety interlocks
Interrupter switch (definition), Art. 100–II
Interrupting rating, 400.5
Intrinsically safe equipment (definition), 440.2
Irradiation-type equipment, 430.6(C)(2)
Irrigation machines
Definition, Art. 100–I
Disconnecting means, 430.9(B)
Electrically driven or controlled, 430.9
Isolated (as applied to location)
Definition, Art. 100–I
Electrolytic cells, 310.5(D)(5)
Grounding circuits, wiring methods, 420.1(A)(2)
Portable or mobile equipment system, 410.10(G)(2), 430.8(F)(1)

--`,,`,,`-`-`,,`,,`,`,,`---

Copyright National Fire Protection Association
Provided by IHS under license with NFPA
No reproduction or networking permitted without license from IHS
Not for Resale

Isolating devices, 430.8(F)
Battery
Main isolating switch, 320.7(D)
Section isolating equipment, 320.7(E)
Capacitors, 420.10(G)(2)
Control devices as, 120.2(E)(6)
Lockout device, acceptance of, 120.2(E)(1)
Over 600 volts, nominal, 450.1(F)
Isolating switches; *see also* Disconnecting means
Definition, Art. 100–I, Art. 100–II
Safety-related maintenance requirements, Art. 210

-J-

Job briefing, 110.7(G), 130.1(A)(2)
Checklist, Annex I
Junction boxes
Hazardous (classified) locations, 440.3(B)(1), 440.3(D) Ex. 1
Over 600 volts, nominal, 420.2(C), 430.11(D)(8)

-K-

Knife switches, 420.3(A) to (C)

-L-

Labeled (definition), Art. 100–I
Lampholders, 410.5(A), 420.1(B)(2)(e), 420.10(A), 420.10(B), 430.11(E)(2)
Lamps, 420.10(A)
Flexible cords and cables for, 420.7(B)(1)
Outdoor lamps, location of, 410.7(E)
Temporary, protection of, 420.1(B)(2)(e), 430.11(E)(2)
Laser controlled area (definition), 330.2
Lasers
Definition, 330.2
Energy source (definition), 330.2
Fiber optic transmission system (definition), 330.2
Hazard area (definition), 330.2
Product (definition), 330.2
Radiation (definition), 330.2
System (definition), 330.2
Work practices, safety-related, Art. 330
Employee responsibility, 330.5
Safeguarding employees in operating area, 330.4
Training, 330.3
Lighting fixtures, 420.10(A)
Battery rooms, 320.5(G)
Elevators, 430.3(E)
Flexible cords and cables for, 420.7(B)(1)
Hazardous (classified) locations, 440.3(B)(1), 440.3(D) Ex. 2
Swimming pools, 430.10(C), 430.10(E)
Lighting outlets
Definition, Art. 100–I
Swimming pools, 430.10(C)
Lightning conductors, 450.5(C)
Lightning protection, electrically driven or controlled irrigation machines, 430.9(A)
Limited approach boundary, 130.2, C.1.1, C.1.2.1; *see also* Approach distances
Definition, Art. 100–I
Listed
Definition, Art. 100–I
Hazardous (classified) locations, equipment for, 440.4(E)(2)
Power-limited fire alarm (PLFA) circuits, 450.4(B)(2)
Live parts
Appliances, 420.10(D)(1)
Definition, Art. 100–I
Guarding of. *see* Guarded
Over 600 volts, nominal, systems, 450.1(G)
Clear working space, 400.21(A)
Elevation of unguarded live parts, 400.21(E)
Guarding of. *see* Guarded
Illumination, 400.21(D)
Locked rooms or enclosures, 400.21(C), 410.8(B)(1)
Separation from low-voltage equipment, 400.21(B)
Safe work conditions, 110.8(A)(1); *see also* Electrical safety program; Working near or on live parts; Work practices, safety-related
Tunnel installations, 450.1(I)(5)
Unsafe work conditions, 110.8(A)(2)
Load interrupter switches, 450.1(E)(5)
Locations
Damp, 400.7
Cord-and-plug-connected appliances in, 410.10(E)(5)
Definition, Art. 100–I
Enclosures, 420.5
Lampholders in, 420.10(B)(3)
Receptacles in, 420.10(C)(3)
Dry, 400.7
Definition, Art. 100–I
Exposed work, open wiring on insulators, 420.1(D)(3)(a)
Metal enclosures, 420.2(A)(2)
Switchboards, 420.4
Wet, 400.7
Cord-and-plug-connected appliances in, 410.10(E)(5)
Definition, Art. 100–I
Enclosures, 420.5
Exposed work, open wiring on insulators, 420.1(D)(3)(b)
Lampholders in, 420.10(B)(3)
Receptacles in, 420.10(C)(3), 420.10(C)(4)
Lockout/tagout practices and devices, 120.2
Audit, 120.2(C)(3)
Complex procedure, 120.2(C)(2), 120.2(D)(3), 120.2(F)(1)(f), Annex G
Control, elements of, 120.2(F)(2)
Coordination, 120.2(D)(4)
Definitions, 120.2(F)(2)(k)
Equipment, 120.2(E)
Grounding, 120.2(F)(2)(g)
Hazardous electrical energy control procedures, 120.2(B)(4), 120.2(C)(2), 120.2(D)
Identification of devices, 120.2(B)(5)
Maintenance of devices, 205.6
Plans for, 120.2(B)(3), 120.2(F)(1)
Principles of execution, 120.2(B)
Procedures, 120.2(F), Annex G
Release
For return to service, 120.2(F)(2)(m)
Temporary, 120.2(F)(2)(n)
Removal of devices, 120.2(E)(3)(e), 120.2(F)(2)(l)
Responsibility, 120.2(C)
Simple procedure, 120.2(C)(2), 120.2(D)(2), 120.2(F)(1)(e), Annex G
Testing, 120.2(F)(2)(f)
Voltage, 120.2(B)(6)
Working on/near conductors or circuit parts with, 110.8(B), 120.1, 120.2
Low-voltage control equipment, systems over 600 volts, nominal, 450.1(G)(2)

-M-

Maintenance requirements, Chap. 2
Batteries and battery rooms, Art. 240
Controller equipment, Art. 220
Fuses and circuit breakers, Art. 225
General, Art. 205
Hazardous (classified) locations, Art. 235
Introduction, Art. 200
Personal safety and protective equipment, Art. 250
Portable electric tools and equipment, Art. 245
Premises wiring, Art. 215
Rotating equipment, Art. 230
Substation, switchgear assemblies, switchboards, panelboards, motor control centers, and disconnect switches, Art. 210
Marking; *see also* Identified/identification
Appliance nameplates, 420.10(D)(3)
Batteries, 320.7(A)(1)
Electrical installations, 400.13
Flash hazards, 400.11
Hazardous (classified) locations, equipment for, 440.3(D), 440.4(D), 440.4(E)(3)
Lasers, 330.4(G)
Portable electric equipment, electrolytic cells, 430.8(E)(2), 430.8(F)(3)
Transformers, voltage warning, 420.10(F)(2)
Mechanical equipment, working on or near uninsulated overhead lines, 130.5(E)
Medium voltage cable, 420.1(C)(3)(b), 450.1(A)
Definition, Art. 100–I
Metal-clad cable
Definition, Art. 100–I
Tunnel installations, 450.1(I)(2)
Metal wireways (definition), Art. 100–I
Meter socket enclosures, 420.2
Cables, 420.2(A)(3)
Metal, 420.2(A)(2)
Openings to be closed, 420.2(A)(1)
Mineral-insulated metal-sheathed cable (definition), Art. 100–I
Mobile equipment
AC systems of 1 kV and over, grounding of, 410.10(C)(6)
Over 600 volts, nominal, 450.1(H)
Mobile X-ray (definition), Art. 100–I
Monorail hoists, 430.2(A)(2)
Motor circuit switches (definition), Art. 100–I
Motor control centers, 400.11
Definition, Art. 100–I
Safety-related maintenance requirements, Art. 210
Motor controllers, 430.3(A)(6), 430.3(C), 430.3(D), 430.3(H)
Motors, 420.10(E)
Disconnecting means, 420.10(E)(2)
Guarding of live parts, 420.10(E)(2)(g), 420.10(E)(2)(h)

Copyright National Fire Protection Association
Provided by IHS under license with NFPA
No reproduction or networking permitted without license from IHS
Not for Resale

Normal operating conditions, 440.3(B)(5)
Overload protection, 420.10(E)(2)(f)
In sight from, 420.10(E)(1)
Moving walks
Disconnecting means, 430.3
Motor controllers, 430.3(H)
Warning signs, 430.3(C)
Multiconductors, wiring methods, cable trays, 420.1(C)(3)(b)
Multi-employer relationship, 110.4, 120.2(D)(3)

-N-

Nominal voltage (definition), 320.2
Nonelectric equipment
Auxiliary connections, electrolytic cells, 310.6(B)
Grounding, 410.10(E)(6)
Nonmetallic cable trays, wiring methods, 420.1(C)(3)(e)
Nonmetallic-sheathed cable (definition), Art. 100–I
Nonmetallic wireways (definition), Art. 100–I
Non-power-limited fire alarm (NPLFA) circuits, 450.4(B)(1), 450.4(C), 450.4(D), 450.4(E)

-O-

Oil-filled cutouts, systems over 600 volts, nominal, 450.1(E)(4)
Oil-insulated transformers
Installed indoors, 420.10(F)(4), 420.10(F)(5)
Installed outdoors, 420.10(F)(5)
One kV and over systems, grounding, 410.10(G)
Openings, unused, 400.8(A)
Open wiring on insulators, 420.1(D)
Conductor supports, 420.1(D)(2)
Definition, Art. 100–I
Exposed work, 420.1(D)(3)
Physical damage, exposed to, 420.1(D)(3)(c)
Through or parallel to framing members, 420.1(D)(4)
Uses, 420.1(D)(1)
Outlet devices, 410.5
Outlets; *see also* Lighting outlets; Receptacle outlets
Battery rooms, 320.5(H), 320.5(I)
Definition, Art. 100–I
Outline lighting, 430.1
Definition, Art. 100–I
Disconnecting means, 430.1
Location, 430.1(B)
Outside branch circuit, feeder, and service conductors, 600 volts, nominal, or less, 410.7
Oven, wall-mounted (definition), Art. 100–I
Overcurrent (definition), Art. 100–I
Overcurrent protection, 400.6, 410.9
Batteries, 320.7(A)(2)
Electrolytic cell line, 430.8(C)(2)
Integrated electric systems, 450.7(B)
Maintenance of devices, 210.5
Modification, 110.9(D)
Over 600 volts, nominal, 410.9(B)
Reclosing circuits after protective device operation, 130.6(K)
600 volts, nominal, or less, 410.9(A)
Overhead lines
Carnivals, circuses, fairs, overhead conductor clearances, 430.11(A)
Grounding, 410.10(C)(3)
Working on or near uninsulated, 130.5
Overload
Definition, Art. 100–I
Motors, protection for, 420.10(E)(2)(f)
Over 600 volts, nominal, 400.17, 450.1; *see also* 600 volts, nominal, or less
Braid-covered insulated conductors—open installations, 450.1(B)
Circuit-interrupting devices, 450.1(E)
Definitions, Art. 100–II
Elevation of unguarded live parts, 400.21(E)
Enclosure for electrical installations, 400.18, 400.18(F)
Installations accessible
Indoor, 400.18(A), 400.18(D)
Outdoor, 400.18(B), 400.18(E)
Qualified persons only, 400.18(A), 400.18(D)(2), 400.18(E)(2)
Unqualified persons, 400.18(B), 400.18(D)(1), 400.18(E)(1), 400.18(F)
Vaults, fire resistivity of, 400.18(C)
Insulation shielding, 450.1(C)
Isolating means, 450.1(F)
Locked rooms or enclosures, 400.21(C), 410.8(B)(1)
Mobile and portable equipment, 450.1(H)
Moisture or mechanical protection, metal-sheathed cable, 450.1(D)
Overcurrent protection, 410.9(B)
Portable cables, 420.8
Protection of service equipment, metal-enclosed power switchgear, and industrial control assemblies, 400.21(F)
Pull and junction boxes, 420.2(C)
Separation from low-voltage equipment, 400.21(B)
Services, 410.8(B)
Tunnel installations, 450.1(I)
Warning signs, 410.8(B)(2)
Wiring methods, aboveground installations, 450.1(A)
Work spaces
About equipment, 400.19
Entrance and access, 400.20
Guarding, 400.20(A)(2), 400.21
Illumination, 400.21(D)

-P-

Pacemakers, implanted, 310.5(D)(11)
Panelboards, 420.4
In damp or wet locations, 420.5(B)
Definition, Art. 100–I
Flash protection, 400.11
Safety-related maintenance requirements, Art. 210
Series combination ratings, 400.14
Panel controls, heating equipment, 430.7(B)(2)
Personal protective equipment (PPE), 130.1(A)(2), 130.1(A)(3), 130.3(B), 130.7(A), 130.7(C)(1), L.1
Batteries and battery rooms, 320.7(F)(3), 320.8
Body protection, 130.7(C)(5)
Care of, 130.7(B)
Clothing characteristics, Annex H
Eye protection, 130.7(C)(4), 330.4(A)
Flash protection. *see* Flash protective equipment
Foot and leg protection, 130.7(C)(7)
Hand and arm protection, 130.7(C)(6)
Head, face, neck, and chin protection, 130.7(C)(3)
Lasers, use of, 330.4(A), 330.4(H)
Maintenance, Art. 250
Required for various tasks, 130.7(C)(9)(a), Table 130.7(C)(9)(a), 130.7(C)(10), Table 130.7(C)(10), Table 130.7(C)(11)
Safeguarding of employees in electrolytic cell line working zone, 310.5(D)(2)
Standards for, 130.7(C)(8), Table 130.7(C)(8)
Pilot cell (definition), 320.2
Planning checklist, Annex I
Pools, swimming, 430.10
Portable cables, over 600 volts, nominal, 420.8
Conductors, 420.8(A)(1), 420.8(A)(3), 420.8(C)
Construction, 420.8(A)
Equipment grounding conductors, 420.8(A)(3)
Fittings, 420.8(E)
Minimum bending radii, 420.8(D)
Shields, 420.8(A)(2), 420.8(B)
Splices and terminations, 420.8(F)
Portable electric equipment, 110.9(B)
Conductive work locations, 110.9(B)(3)(d)
Connecting attachment plugs, 110.9(B)(4)
Electrolytic cells, 310.6(A), 430.8(E) to (G), L.2
Grounding, 410.10(C)(6), 410.10(G)(2)
Grounding-type, 110.9(B)(2)
Handling, 110.9(B)(1)
Over 600 volts, nominal, 450.1(H)
Safety-related maintenance requirements, Art. 245
Visual inspection, 110.9(B)(3)
Portable generators, 410.10(C)(7)(a)
Portable lamps
Flexible cords and cables for, 420.7(B)(1)
Handlamps, 410.10(E)(5), 420.10(A)(1)
Power and control tray cable (definition), Art. 100–I
Power electronic equipment, safety-related work practices, Art. 340
Definitions, 340.2
Hazards associated with, 340.5, 340.6
Reference standards, 340.4
Specific measures, 340.7
Power-limited circuits, Class 1, Class 2, and Class 3, 450.3
Power-limited fire alarm (PLFA) circuits, 450.4(B)(2), 450.4(D) to (F)
Power-limited tray cable (definition), Art. 100–I
Power supply
Portable electric equipment, circuits for, 310.6(A), 430.8(F)
Power-limited fire alarm (PLFA) circuits, 450.4(B)(2)
Premises wiring (system)
Definition, Art. 100–I
Maintenance of, Art. 215
Prohibited approach boundary (definition), Art. 100–I
Prospective fault current (definition), 320.2

Copyright National Fire Protection Association
Provided by IHS under license with NFPA
No reproduction or networking permitted without license from IHS
Not for Resale

Protective clothing, 130.2(C)(1), 130.3(B), 130.7(C), L.1
Arc flash protection, 130.7(C)(12), 130.7(C)(13), 130.7(C)(16)
Care and maintenance, 130.7(C)(16)
Characteristics, 130.7(C)(11), 130.7(C)(14)
Prohibited clothing, 130.7(C)(15)
Selection of, 130.7(C)(12)
Protective equipment, 130.5(C), 130.5(E)(2), 130.7
Alerting techniques, 130.7(E)
Barricades, 130.7(E)(2)
Barriers. *see* Barriers
Batteries, maintenance of, 320.7(A)(3), 320.7(F)(3)
Care of equipment, 130.7(B)
Flash protection. *see* Flash protective equipment
Insulated tools, 130.7(D)(1)
Maintenance, Art. 250
Nonconductive ladders, 130.7(D)(1)(e)
Personal. *see* Personal protective equipment (PPE)
Rubber insulating equipment, 130.7(D)(1)(g)
Safety signs and tags, 130.7(E)(1)
Standards for, Table 130.7(C)(8), Table 130.7(F)
Temporary protective grounding equipment, 120.3
Voltage rated plastic guard equipment, 130.7(D)(1)(h)
Pull boxes, over 600 volts, nominal, 420.2(C)

-Q-

Qualified persons, 110.8(A)(2), 110.8(B)(3), 130.1(A)(3)
Approach distances, 130.2(C), C.1.2
Definition, Art. 100–I
Electrolytic cells, training for, 310.4(A)
Employee training, 110.6(D)(1)
Individual control procedure, 120.2(D)(1), 120.2(F)(1)(d)
Lockout/tagout procedures, 120.2(C)(2), 120.2(C)(3), 120.2(D)(1), 120.2(D)(2), 120.2(F)(1)(d)
Maintenance, performance of, 205.1
Over 600 volts, nominal, systems, accessibility of, 400.18(A), 400.18(D)(2), 400.18(E)(2), 410.8(B)(1)
Safety interlocks, defeating or bypassing, 110.8(B)(4)
Testing work on or near live parts, 130.4

-R-

Raceways
Definition, Art. 100–I
Hazardous (classified) locations, 440.3(B)(1)
Maintenance, 215.3
Metal, bonding of, 420.1(A)(1)
Tunnel installations, 450.1(I)(2)
Unused openings, closing of, 400.8(A)
Radiation worker (definition), 340.2
Radiographic-type equipment, 430.6(C)(1)
Rate (definition), 320.2
Readily accessible. *see* Accessible, readily (readily accessible)
Receptacle outlets, 420.7(B)(2)
Definition, Art. 100–I
Ground-fault protection, 410.4(B)
Receptacles, 410.5(B), 420.10(C)
Assured equipment grounding conductor program, temporary wiring, 410.4(B)(2)(b)
To be grounded, 410.2(B)(2)
Branch circuits, installed on, 410.2(B)
Carnivals, circuses, fairs, use at, 430.11(F)
Cord-and-plug-connected equipment, 410.2(B)(5)
Definition, Art. 100–I
Electrolytic cell lines, L.2
Elevators, 430.3(E)
Ground-fault circuit interrupter protected, 410.2(B)(4)(b), 410.4(B)(1), 410.4(B)(2)(a)
Grounding methods, 410.2(B)(3)
Grounding-type, 410.2(B)(1), 410.2(B)(4)(a), 410.2(B)(5), 410.10(D)(3)
Nongrounding-type, 410.2(B)(4)(c), 410.10(D)(3)
Noninterchangeable type, 410.2(B)(6), 430.8(F)(2)
Portable electric equipment, 110.9(B)(2)(b), 110.9(B)(3)(c), 110.9(B)(4)(b), 430.8(F)
Replacements, 410.2(B)(4)
Swimming pools, 430.10(B)
Temporary wiring, 420.1(B)(2)(c)
References, Annex A, Annex B
Remote-control circuits, Class 1, Class 2, and Class 3, 450.3
Resistance welders, disconnecting means, 430.4(B)
Restricted approach boundary, 130.2, C.1.1, C.1.2.3; *see also* Approach distances
Definition, Art. 100–I
Ropes, 130.7(D)(1)(c)

-S-

Safeguarding
In cell line working zone, 310.5, Annex L
Definition, 310.2
In laser operating area, 330.4
Safety grounding equipment, maintenance of, 250.3
Safety interlocks, 110.8(B)(4)
Fail safe safety interlock (definition), 330.2
Maintenance of, 205.6
Safety-related maintenance requirements. *see* Maintenance requirements
Safety-related work practices. *see* Work practices, safety-related
Scope of standard, 90.1
Sealed batteries
Definition, 320.2
Ventilation, 320.4(E)
Secondary battery (definition), 320.2
Secondary cell (definition), 320.2
Separately derived system (definition), Art. 100–I
Services, 410.8
Definition, Art. 100–I
Over 600 volts, nominal, 410.8(B)
Service cable (definition), Art. 100–I
Service conductors
Definition, Art. 100–I
Outside, 600 volts, nominal, or less, 410.7
Service drop (definition), Art. 100–I
Service-entrance cable
Definition, Art. 100–I
Type SE (definition), Art. 100–I
Type USE (definition), Art. 100–I
Service-entrance conductors
Definition, Art. 100–I
Overhead system (definition), Art. 100–I
Underground system (definition), Art. 100–I
Service equipment
Carnivals, circuses, fairs, guarding at, 430.11(C)
Definition, Art. 100–I
Disconnecting means, 410.8(A)
Enclosures
Grounding, 410.10(E)(2)
Protection of, 400.21(F)
Service point (definition), Art. 100–I
Shields, portable cables, over 600 volts, nominal, 420.8(A)(2), 420.8(B)
Shock hazard, K.2
Definition, Art. 100–I
Protection from, 130.7(C)(12)
Shock hazard analysis, 110.8(B)(1)(a), 130.1(A)(2), 130.2(A)
Shock protection boundaries, 130.1(A)(2), 130.2(B)
Show window (definition), Art. 100–I
Signaling circuits
Class 1, Class 2, and Class 3, 450.3
Definition, Art. 100–I
Signs; *see also* Electric signs
Electrolytic cell areas, 310.5(B)
Elevators, escalators, dumbwaiters, moving walks, wheelchair lifts, and stairway chair lifts, 430.3(A)(4), 430.3(C)
Single conductors
Carnivals, circuses, fairs, use at, 430.11(D)(2)
Wiring methods, cable trays, 420.1(C)(3)(a)
Single line diagram, maintenance of, 205.2
Single-throw knife switches, 420.3(A)
600 volts, nominal, or less; *see also* Over 600 volts, nominal
Against accidental contact, 400.16(A)
Clear space, 400.15(B), 400.21(A)
Dedicated equipment space, 400.15(F)
Electrical space, 400.15(F)(1)(a)
Foreign systems, 400.15(F)(1)(b)
Indoor installations, 400.15(F)(1)
Outdoor installations, 400.15(F)(2)
Sprinkler protection, 400.15(F)(1)(c)
Suspended ceilings, 400.15(F)(1)(d)
Electrical installations, Art. 400 Part II
Guarding. *see* Guarded
Headroom, 400.15(E)
Illumination, 400.15(D)
Outside branch circuit, feeder and service conductors, 410.7
Overcurrent protection, 410.9(A)
Prevention of physical damage, 400.16(B)
Separation of over 600 volts, nominal, systems, 400.21(B)
Spaces about electric equipment, 400.15
Working spaces, 400.15(A)
Access and entrance to, 400.15(C)
Clear spaces, 400.15(B), 400.21(A)

Copyright National Fire Protection Association
Provided by IHS under license with NFPA
No reproduction or networking permitted without license from IHS
Not for Resale

Depth of, 400.15(A)(1)
Headroom, 400.15(E)
Height of, 400.15(A)(3)
Width of, 400.15(A)(2)
Snap switches, 420.3(D), 420.3(D)(2)
Solar photovoltaic systems, 450.6
Spaces, maintenance of, 205.3, 205.7
Spas, electrical installations, 430.10(A)
Special equipment, Chap. 3; *see also* Batteries; Battery rooms; Electrolytic cell; Lasers; Power electronic equipment
Organization, 300.3
Responsibility, 300.2
Special permission (definition), Art. 100–I
Special systems, Art. 450
Class 1, Class 2, and Class 3 remote control, signaling, and power-limited circuits, 450.3
Communication, 450.5
Emergency power, 450.2
Fire alarm, 450.4
Integrated electrical, 450.7
Over 600 volts, nominal, 450.1
Solar photovoltaic, 450.6
Splices, 400.10
Carnivals, circus, fairs, use at, 430.11(D)(4)
Flexible cords and cables, 420.7(E)(2)
Portable cables, over 600 volts, nominal, 420.8(F)
Temporary wiring, 420.1(B)(2)(f)
Stairway chair lifts
Disconnecting means, 430.3
Motor controllers, 430.3(H)
Warning signs, 430.3(C)
Stepped stand (definition), 320.2
Step potential (definition), Art. 100–I
Storage batteries, 420.10(H)
Stored energy, 120.1, 120.2(F)(2)(b)
Substations, safety-related maintenance requirements, Art. 210
Suddenly moving parts, overcurrent protection for, 410.9(A)(4)(b)
Supports
Carnivals, circuses, fairs, wiring at, 430.11(D)(6)
Conductors, open wiring on insulators, 420.1(D)(2)
Temporary wiring, 420.1(B)(2)(i)
Swimming pools, electrical installations, 430.10
Switches; *see also* Switching devices
Battery rooms, 320.5(G), 320.7(B)
Capacitor switching, 420.10(G)(1), 420.10(G)(3)
Circuit breakers used as, 410.9(A)(5)(a)
Connection, 420.3
DC switching equipment, battery, 320.3(C)(1), 320.3(D)
Disconnecting. *see* Disconnecting (or isolating) switches (disconnector, isolator)
Faceplates for flush-mounted snap switches, 420.3(D)(1)
Foot, induction and dielectric heating equipment, 430.7(C)(2)
Interrupter switch (definition), Art. 100–II
Isolating switch. *see* Isolating switches
Knife switches, 420.3(A) to (C)
Limit, cranes and hoists, 430.2(B)
Load interrupter, 450.1(E)(5)
Load-rated, 130.6(J)
Motor circuit switch (definition), Art. 100–I
Photovoltaic systems, 450.6(C)(2)
Portable cutout type, 310.5(D)(8)
Position, 420.3
Separation from over 600 volts, nominal, live parts or wiring, 400.21(B)
Snap, 420.3(D), 420.3(D)(2)
Switchboards, 420.4
Accessibility, 400.20(1)
In damp or wet locations, 420.5(B)
Definition, Art. 100–I
Flash protection, 400.11
Safety-related maintenance requirements, Art. 210
Series combination ratings, 400.14
Switchgear assemblies
Protection of, 400.21(F)
Safety-related maintenance requirements, Art. 210
Switching devices; *see also* Circuit breakers; Disconnecting means; Switches
Cutout. *see* Cutout
Definition, Art. 100–II
Disconnecting (or isolating) switch. *see* Disconnecting (or isolating) switches (disconnector, isolator)
Interrupter switch (definition), Art. 100–II
Swimming pools, fountains, and similar installations, 430.10(D)

-T-

Tagout. *see* Lockout/tagout practices and devices
Temporary protective grounding equipment, 120.3
Temporary wiring, 420.1(B)
Carnivals, circuses, fairs, at, 430.11(E)(2)
Flexible cords and cables for, 420.7(B)(1)
Ground-fault protection, 410.4(B)
Terminal post (definition), 320.2
Terminals
Battery. *see* Battery terminals
Conductor connections, 400.10
Flexible cords and cables, pull of, 420.7(E)(3)
Integrity of, 400.8(C)
Maintenance of, 230.1
Portable cables, over 600 volts, nominal, 420.8(F)
Testing
Assured equipment grounding conductor program, 410.4(B)(2)(b)
Deenergized parts, 120.1
Energized equipment, 130.1(A)(3)
Ground-fault circuit-interrupters, 110.9(C)
Lockout/tagout procedure, 120.2(F)(2)(f)
Personal protective equipment, 310.5(D)(2)(b)
Safety and protective equipment, insulation of, 250.2(B)
Safety grounding equipment, 250.3(A)
Temporary wiring for, 420.1(B)(1)(c)
Test instruments and equipment, 110.9(A)
Cell line working zone, 310.6(D)
Visual inspection, 110.9(A)(3)
Work on or near live parts, 130.4
Therapeutic pools, electrical installations, 430.10(A)
Tiered stand (definition), 320.2
Tools
Batteries, for work on, 320.9
Electrolytic cells, safe work practices, 310.5(D)(7), 310.6, L.2
Touch potential (definition), Art. 100–I
Training, employees, 110.3
Emergency procedures, 110.6(C)
Lockout/tagout practices, 120.2(B)(2), 120.2(D)(5), Annex G
Qualified persons, 110.6(D)(1)
Unqualified persons, 110.6(D)(2)
Work practices, safety-related, 110.3, 110.6, 310.3, 310.4, 310.5(D)(6), 330.3
Transformers, 420.10(F)
Dry-type, installed indoors, 420.10(F)(3)
Grounding, 410.10(C)(3), 410.10(C)(5)
High-voltage control transformers, systems over 600 volts, nominal, 450.1(G)(3)
Oil-insulated
Indoor installation, 420.10(F)(4)
Outdoor installation, 420.10(F)(5)
Over 600 volts, nominal, overcurrent protection, 410.9(B)(1)(a)
Power-limited fire alarm (PLFA) circuits, 450.4(B)(2)
Vaults
Doorways, 420.10(F)(6)
Storage in, 420.10(F)(8)
Water pipes and accessories in, 420.10(F)(7)
Tunnel installations, over 600 volts, nominal, 450.1(I)

-U-

Underwater equipment, electrical installations, 430.10(E)
Ungrounded conductors, identification, 410.2(A), 410.3, 420.6(C)
Uninsulated overhead lines, working on or near, 130.5
Unqualified persons, 110.8(B)(3), 130.1(A)(2)
Approach distances, 130.2(D), 130.5(D), C.1.1
Definition, Art. 100–I
Electrolytic cells, training for, 310.4(B)
Employee training, 110.6(D)(2)
Over 600 volts, nominal, systems, accessibility of, 400.18(B), 400.18(D)(1), 400.18(E)(1), 400.18(F)
Utilization equipment
Definition, Art. 100–I
Elevators, disconnecting means, 430.3(G)
Flexible cords and cables for, 420.7(B)(1)
Grounding-type, 110.9(B)(2)(a)

-V-

Valve regulated battery (definition), 320.2
Vapor removal ducts, wiring of, 420.1(A)(3)
Vaults
Doorway, 420.10(F)(6)
Fire resistivity, 400.18(C)
Storage in, 420.10(F)(8)
Water pipes and accessories in, 420.10(F)(7)
Vehicle-mounted generators, 410.10(C)(7)(b)
Vehicular equipment, working on or near uninsulated overhead lines, 130.5(E)

Copyright National Fire Protection Association
Provided by IHS under license with NFPA
No reproduction or networking permitted without license from IHS
Not for Resale

Vented batteries, 320.4(C)
Definition, 320.2
Ventilated/ventilation
Batteries, 240.1, 240.2, 320.4(C) to (E)
Definition, Art. 100–I
Elevators, 430.3(E)
Vent plug
Definition, 320.2
Flame-arrested (definition), 320.2
Volatile flammable liquid (definition), Art. 100–I
Voltage
(Of a circuit) (definition), Art. 100–I
Electrolytic cells, voltage equalization, 310.5(D)(4)
Lockout/tagout procedures, 120.2(B)(6)
Nominal (definition), Art. 100–I
To ground (definition), Art. 100–I
Warning, 420.10(F)(2)
VRLA (valve-regulated lead-acid storage battery)
Definition, 320.2
Ventilation, 320.4(D)

-W-

Warning signs
Battery rooms and enclosures, 320.7(F)
Dielectric heating equipment, 430.7(B)(4)
Induction heating equipment, 430.7(B)(4)
Lasers, 330.4(B)
Maintenance of, 205.9
Photovoltaic systems, disconnecting means, 450.6(C)(2)
Rooms and locations containing exposed live parts operating at 50 volts, 400.16(C)
Service over 600 volts, nominal, 410.8(B)(2)
Transformers, voltage, 420.10(F)(2)
Watertight (definition), Art. 100–I
Weatherproof (definition), Art. 100–I
Welding machines, 310.6(C)
Wet locations. *see* Locations
Wheelchair lifts
Disconnecting means, 430.3
Motor controllers, 430.3(H)
Warning signs, 430.3(C)
Wiring, premises. *see* Premises wiring (system)
Wiring components and equipment, general use
Appliances, 420.10(D)
Cabinets, cutout boxes, and meter socket enclosures, 420.2
Capacitors, 420.10(G)
Conductor identification, 420.6
Covers and canopies, 215.1, 420.2(B)
Enclosures, damp or wet locations, 420.5
Fixture wires, 420.9
Flexible cords and cables, 420.7
Lampholders, installation of, 420.10(B)
Live parts, 420.10(A)
Motors, 420.10(E)
Portable cables over 600 volts, nominal, 420.8
Receptacles, cord connectors, and attachment plugs (caps), 420.10(C)
Storage batteries, 420.10(H)
Switchboards and panelboards, 420.4
Switches, 420.3
Transformers, 420.10(F)
Wiring design and protection
Branch circuits, 410.2
Grounded and grounding conductors, 410.1
Grounding, 410.10
Outside branch circuit, feeder, and service conductors, 600 volts, nominal, or less, 410.7
Overcurrent protection, 410.9
Services, 410.8
Wiring methods, 420.1
Bonding other enclosures, 420.1(A)(1)
Cable trays, 420.1(C)(2), 420.1(C)(3)
Carnivals, circuses, fairs, electrical installations at, 430.11(D)
Ducts, 420.1(A)(3)
Emergency power systems, 450.2(B)
Fixed and portable electrical equipment, electrolytic cells, 430.8(G)(3)
Hazardous (classified) locations, 440.3(B)(1)
Isolated grounding circuits, 420.1(A)(2)
Open wiring on insulators, 420.1(D)
Systems over 600 volts, nominal, 450.1
Temporary wiring, 420.1(B)
Working near or on live parts, 110.1, 110.8, Art. 130; *see also* Work practices, safety-related
Alertness of personnel, 130.6(A)
Approach boundaries to live parts, 130.2, Table 130.2(C)
Blind reaching by employees, 130.6(B)
Conductive articles being worn, 130.6(D)
Conductive materials, tools, and equipment being handled, 130.6(E)
Confined or enclosed work spaces, 130.6(F)
Deenergized electrical conductors or circuit parts that have lockout/tagout devices, 110.8(B)
Energized electrical work permit, 130.1(A)
Failure, anticipation of, 130.6(I)
Flash hazard analysis, 130.3
Housekeeping duties, 130.6(G)
Illumination, 130.6(C)
Insulated tools and equipment, 130.7(D)(1)
Justification for work, 130.1
Occasional use of flammable materials, 130.6(H)
Opening and closing of circuits, routine, 130.6(J)
Portable ladders, 130.7(D)(1)(e)
Protective shields, 130.6(F), 130.7(D)(1)(f)
Reclosing circuits after protective device operation, 130.6(K)
Test instruments and equipment use, 130.4
Uninsulated overhead lines, work on or near, 130.5
Work permit, energized electrical, 110.8(B)(2), 130.1(A), Annex J
Work practices, safety-related, Chap. 1; *see also* Electrically safe work condition; Working near or on live parts
Approach distances. *see* Approach distances
Batteries and battery rooms, Art. 320
Deenergized equipment. *see* Electrically safe work condition
Electrical conductors or circuit parts that are or might become energized, work on or near, 110.8
Electrical safety program, 110.7
Electrolytic cells, Art. 310, L.1
Lasers, Art. 330
Multi-employer relationship, 110.4
Power electronic equipment, Art. 340
Purpose, 110.2
Responsibility for, 110.3
Scope, 110.1
Special equipment. *see* Special equipment
Training requirements, 110.3, 110.6
Use of equipment, 110.9

-X-

X-ray equipment, 430.6
Control—industrial and commercial laboratory equipment, 430.6(C)
Disconnecting means, 430.6(A)
Independent control, 430.6(B)

Copyright National Fire Protection Association
Provided by IHS under license with NFPA
No reproduction or networking permitted without license from IHS
Not for Resale

Sequence of Events Leading to Publication of an NFPA Committee Document

Call goes out for proposals to amend existing document or for recommendations on new document.

▼

Committee meets to act on proposals, to develop its own proposals, and to prepare its report.

▼

Committee votes on proposals by letter ballot. If two-thirds approve, report goes forward. Lacking two-thirds approval, report returns to committee.

▼

Report — *Report on Proposals* (ROP) — is published for public review and comment.

▼

Committee meets to act on each public comment received.

▼

Committee votes on comments by letter ballot. If two-thirds approve, supplementary report goes forward. Lacking two-thirds approval, supplementary report returns to committee.

▼

Supplementary report — *Report on Comments* (ROC) — is published for public review.

▼

NFPA membership meets (Annual or Fall Meeting) and acts on committee report (ROP or ROC).

▼

Committee votes on any amendments to report approved at NFPA Annual or Fall Meeting.

▼

Appeals to Standards Council on Association action must be filed within 20 days of the NFPA Annual or Fall Meeting.

▼

Standards Council decides, based on all evidence, whether or not to issue standard or to take other action, including upholding any appeals.

Committee Membership Classifications

The following classifications apply to Technical Committee members and represent their principal interest in the activity of the committee.

M *Manufacturer:* A representative of a maker or marketer of a product, assembly, or system, or portion thereof, that is affected by the standard.

U *User:* A representative of an entity that is subject to the provisions of the standard or that voluntarily uses the standard.

I/M *Installer/Maintainer:* A representative of an entity that is in the business of installing or maintaining a product, assembly, or system affected by the standard.

L *Labor:* A labor representative or employee concerned with safety in the workplace.

R/T *Applied Research/Testing Laboratory:* A representative of an independent testing laboratory or independent applied research organization that promulgates and/or enforces standards.

E *Enforcing Authority:* A representative of an agency or an organization that promulgates and/or enforces standards.

I *Insurance:* A representative of an insurance company, broker, agent, bureau, or inspection agency.

C *Consumer:* A person who is, or represents, the ultimate purchaser of a product, system, or service affected by the standard, but who is not included in the *User* classification.

SE *Special Expert:* A person not representing any of the previous classifications, but who has a special expertise in the scope of the standard or portion thereof.

NOTES:

1. "Standard" connotes code, standard, recommended practice, or guide.
2. A representative includes an employee.
3. While these classifications will be used by the Standards Council to achieve a balance for Technical Committees, the Standards Council may determine that new classifications of members or unique interests need representation in order to foster the best possible committee deliberations on any project. In this connection, the Standards Council may make such appointments as it seems appropriate in the public interest, such as the classification of "Utilities" in the National Electrical Code Committee.
4. Representatives of subsidiaries of any group are generally considered to have the same classification as the parent organization.

Copyright National Fire Protection Association
Provided by IHS under license with NFPA
No reproduction or networking permitted without license from IHS
Not for Resale

NFPA Technical Committee Document Proposal Form

Note: All proposals must be received by 5:00 p.m. EST/EDST on the published proposal closing date.

For further information on the standards-making process, please contact Codes and Standards Administration at 617-984-7249. For technical assistance, please call NFPA at 617-770-3000.

FOR OFFICE USE ONLY
Log #: _____
Date Rec'd: _____

Please indicate in which format you wish to receive your ROP/ROC: ☐ **CD ROM** ☐ **paper** ☐ **download**
(Note: In choosing the download option you intend to view the ROP/ROC from our Website. No copy will be sent to you.)

Date 12/18/02 **Name** John B. Smith **Telephone** 617-555-1212
Company _____
Address 9 Seattle St. **City** Seattle **State** WA **Zip** 02255
Please indicate organization represented (if any) Fire Marshals Assn. of North America

1. **a) NFPA Document Title** National Fire Alarm Code
   b) NFPA No. & Edition NFPA 72, 2002 ed. **c) Section/Paragraph** 4.4.7.1.1

2. **Proposal Recommends:** *(check one)* ☐ **new text** ☐ **revised text** ☒ **deleted text**

3. **Proposal.** *(Include proposed new or revised wording, or identification of wording to be deleted.)* Note: Proposed text should be in legislative format, that is, use underscore to denote wording to be inserted (inserted wording) and strike-through to denote wording to be deleted (~~deleted wording~~). Delete exception.

4. **Statement of Problem and Substantiation for Proposal.** Note: State the problem that will be resolved by your recommendation. Give the specific reason for your proposal including copies of tests, research papers, fire experience, etc. If more than 200 words, it may be abstracted for publication. A properly installed and maintained system should be free of ground faults. The occurrence of one or more ground faults should be required to cause a "trouble" signal because it indicates a condition that could contribute to future malfunction of the system. Ground fault protection has been widely available on these systems for years and its cost is negligible. Requiring it on all systems will promote better installations, maintenance and reliability.

5. ☒ **This Proposal is Original Material.** Note: Original material is considered to be the submitter's own idea based on or as a result of his/her own experience, thought, or research and, to the best of his/her knowledge, is not copied from another source.

   ☐ **This Proposal is Not Original Material; Its Source** ***(if known)*** **is as Follows:** _____

Sample

I hereby grant the NFPA all and full rights in copyright to this proposal, and I understand that I acquire no rights in any publication of NFPA in which this proposal in this or another similar or analogous form is used.

Signature ***(Required)*** John B. Smith

PLEASE USE SEPARATE FORM FOR EACH PROPOSAL • NFPA FAX (617) 770-3500

Mail to: Secretary, Standards Council • NFPA • 1 Batterymarch Park • PO Box 9101 • Quincy, MA 02269-9101

Copyright National Fire Protection Association
Provided by IHS under license with NFPA
No reproduction or networking permitted without license from IHS
Not for Resale

NFPA Technical Committee Document Proposal Form

Note: All proposals must be received by 5:00 p.m. EST/EDST on the published proposal closing date.

For further information on the standards-making process, please contact Codes and Standards Administration at 617-984-7249. For technical assistance, please call NFPA at 617-770-3000.

FOR OFFICE USE ONLY
Log #: _____
Date Rec'd: _____

Please indicate in which format you wish to receive your ROP/ROC: ☐ **CD ROM** ☐ **paper** ☐ **download**
(Note: In choosing the download option you intend to view the ROP/ROC from our Website. No copy will be sent to you.)

Date _____ **Name** _____ **Telephone** _____
Company _____
Address _____ **City** _____ **State** _____ **Zip** _____
Please indicate organization represented (if any) _____

1. **a) NFPA Document Title** _____
   b) NFPA No. & Edition _____ **c) Section/Paragraph** _____

2. **Proposal Recommends:** *(check one)* ☐ **new text** ☐ **revised text** ☐ **deleted text**

3. **Proposal.** *(Include proposed new or revised wording, or identification of wording to be deleted.)* Note: Proposed text should be in legislative format, that is, use underscore to denote wording to be inserted (inserted wording) and strike-through to denote wording to be deleted (~~deleted wording~~). _____

4. **Statement of Problem and Substantiation for Proposal.** Note: State the problem that will be resolved by your recommendation. Give the specific reason for your proposal including copies of tests, research papers, fire experience, etc. If more than 200 words, it may be abstracted for publication. _____

5. ☐ **This Proposal is Original Material.** Note: Original material is considered to be the submitter's own idea based on or as a result of his/her own experience, thought, or research and, to the best of his/her knowledge, is not copied from another source.

   ☐ **This Proposal is Not Original Material; Its Source *(if known)* is as Follows:** _____

I hereby grant the NFPA all and full rights in copyright to this proposal, and I understand that I acquire no rights in any publication of NFPA in which this proposal in this or another similar or analogous form is used.

Signature *(Required)* _____

PLEASE USE SEPARATE FORM FOR EACH PROPOSAL • NFPA FAX (617) 770-3500

Mail to: Secretary, Standards Council • NFPA • 1 Batterymarch Park • PO Box 9101 • Quincy, MA 02269-9101

Copyright National Fire Protection Association
Provided by IHS under license with NFPA
No reproduction or networking permitted without license from IHS
Not for Resale