Tentative Interim Amendment

NFPA 5000®

Building Construction and Safety Code®

2006 Edition

Reference: A.16.3.4.3.4
TIA 06-1 (NFPA 5000)
(SC 06-7-27)/Log No. 844)

Pursuant to Section 5 of the NFPA Regulations Governing Committee Projects, the National Fire Protection Association has issued the following Tentative Interim Amendment to NFPA 5000® *Building Construction and Safety Code®*, 2006 edition. The TIA was processed by the Building Code Committee and was issued by the Standards Council on July 28, 2006, with an effective date of August 19, 2006.

A Tentative Interim Amendment is tentative because it has not been processed through the entire standards-making procedures. It is interim because it is effective only between editions of the standard. A TIA automatically becomes a proposal of the proponent for the next edition of the standard; as such, it then is subject to all of the procedures of the standards-making process.

Add an asterisk to 16.3.4.3.4 and add new annex text to chapter 16 for assembly occupancies as follows:

A.16.3.4.3.4 Automatic occupant notification in assembly occupancies with occupant load sufficient to require a fire alarm system is problematic. The physical configuration (including large-volume spaces) of assembly venues and the human behavior characteristics of the occupants (including elevated levels of occupant-generated noise) present challenges to effective occupant notification by a voice communication system in compliance with NFPA 72®, *National Fire Alarm Code®*. The technical committee responsible for the assembly occupancy chapters of this *Code* seriously deliberated the subject of mandating occupant notification strictly in accordance with NFPA 72 during recent revision cycles, in particular during the processing of the 2006 edition when public proposals and comments were received on the subject. The deliberations resulted in the committee action of retaining the requirements in place which permit the occupant notification voice announcement to be made per 16.3.4.3.4 via an approved voice communication or public address system, provided with emergency power, that is audible above the ambient noise level of the assembly occupancy.

The technical committee acted to maintain the occupant notification provisions that have been in the *Code* for numerous editions for the following reasons:

(1) The effective day-to-day operation of assembly occupancy venues is highly reliant on the functionality of the public address system, thus ensuring reliability comparable to that found in a typical NFPA 72 notification system.

Copyright National Fire Protection Association
Provided by IHS under license with NFPA
No reproduction or networking permitted without license from IHS
Not for Resale

(2) The acoustical performance of the public address system is superior to the performance capabilities of listed fire alarm notification equipment as applied to large volume spaces.

(3) The public address system is designed, installed, and maintained to have the tremendous power to be heard over crowd noises and performances.

(4) The large assembly areas are characterized by the lack of fire separation.

(5) The public address system announcement, live or pre-defined, can adequately perform the intended function of notifying occupants of an emergency condition and of what actions to take.

(6) The public address system with its required emergency power back-up has the reliability to provide effective occupant notification in these venues that are, in most cases, highly managed and supervised.

(7) Costs associated with providing an NFPA 72 notification system are not justified in that such a system would be redundant to the public address system that is equivalent, if not superior, from a technical and reliability standpoint.

Copyright © 2006 All Rights Reserved
NATIONAL FIRE PROTECTION ASSOCIATION

Copyright National Fire Protection Association
Provided by IHS under license with NFPA
No reproduction or networking permitted without license from IHS
Not for Resale

NFPA 5000™

Building Construction and Safety Code™

2006 Edition

NFPA, 1 Batterymarch Park, Quincy, MA 02169-7471
An International Codes and Standards Organization

Copyright National Fire Protection Association
Provided by IHS under license with NFPA
No reproduction or networking permitted without license from IHS

Not for Resale

IMPORTANT NOTICES AND DISCLAIMERS CONCERNING NFPA DOCUMENTS

NOTICE AND DISCLAIMER OF LIABILITY CONCERNING THE USE OF NFPA DOCUMENTS

NFPA codes, standards, recommended practices, and guides, of which the document contained herein is one, are developed through a consensus standards development process approved by the American National Standards Institute. This process brings together volunteers representing varied viewpoints and interests to achieve consensus on fire and other safety issues. While the NFPA administers the process and establishes rules to promote fairness in the development of consensus, it does not independently test, evaluate, or verify the accuracy of any information or the soundness of any judgments contained in its codes and standards.

The NFPA disclaims liability for any personal injury, property or other damages of any nature whatsoever, whether special, indirect, consequential or compensatory, directly or indirectly resulting from the publication, use of, or reliance on this document. The NFPA also makes no guaranty or warranty as to the accuracy or completeness of any information published herein.

In issuing and making this document available, the NFPA is not undertaking to render professional or other services for or on behalf of any person or entity. Nor is the NFPA undertaking to perform any duty owed by any person or entity to someone else. Anyone using this document should rely on his or her own independent judgment or, as appropriate, seek the advice of a competent professional in determining the exercise of reasonable care in any given circumstances.

The NFPA has no power, nor does it undertake, to police or enforce compliance with the contents of this document. Nor does the NFPA list, certify, test or inspect products, designs, or installations for compliance with this document. Any certification or other statement of compliance with the requirements of this document shall not be attributable to the NFPA and is solely the responsibility of the certifier or maker of the statement.

Copyright National Fire Protection Association
Provided by IHS under license with NFPA
No reproduction or networking permitted without license from IHS
Not for Resale

ADDITIONAL NOTICES AND DISCLAIMERS

Updating of NFPA Documents

Users of NFPA codes, standards, recommended practices, and guides should be aware that these documents may be superseded at any time by the issuance of new editions or may be amended from time to time through the issuance of Tentative Interim Amendments. An official NFPA document at any point in time consists of the current edition of the document together with any Tentative Interim Amendments and any Errata then in effect. In order to determine whether a given document is the current edition and whether it has been amended through the issuance of Tentative Interim Amendments or corrected through the issuance of Errata, consult appropriate NFPA publications such as the National Fire Codes® Subscription Service, visit the NFPA website at www.nfpa.org, or contact the NFPA at the address listed below.

Interpretations of NFPA Documents

A statement, written or oral, that is not processed in accordance with Section 6 of the Regulations Governing Committee Projects shall not be considered the official position of NFPA or any of its Committees and shall not be considered to be, nor be relied upon as, a Formal Interpretation.

Patents

The NFPA does not take any position with respect to the validity of any patent rights asserted in connection with any items which are mentioned in or are the subject of NFPA codes, standards, recommended practices, and guides, and the NFPA disclaims liability for the infringement of any patent resulting from the use of or reliance on these documents. Users of these documents are expressly advised that determination of the validity of any such patent rights, and the risk of infringement of such rights, is entirely their own responsibility.

NFPA adheres to applicable policies of the American National Standards Institute with respect to patents. For further information contact the NFPA at the address listed below.

Law and Regulations

Users of these documents should consult applicable federal, state, and local laws and regulations. NFPA does not, by the publication of its codes, standards, recommended practices, and guides, intend to urge action that is not in compliance with applicable laws, and these documents may not be construed as doing so.

Copyrights

This document is copyrighted by the NFPA. It is made available for a wide variety of both public and private uses. These include both use, by reference, in laws and regulations, and use in private self-regulation, standardization, and the promotion of safe practices and methods. By making this document available for use and adoption by public authorities and private users, the NFPA does not waive any rights in copyright to this document.

Use of NFPA documents for regulatory purposes should be accomplished through adoption by reference. The term “adoption by reference” means the citing of title, edition, and publishing information only. Any deletions, additions, and changes desired by the adopting authority should be noted separately in the adopting instrument. In order to assist NFPA in following the uses made of its documents, adopting authorities are requested to notify the NFPA (Attention: Secretary, Standards Council) in writing of such use. For technical assistance and questions concerning adoption of NFPA documents, contact NFPA at the address below.

For Further Information

All questions or other communications relating to NFPA codes, standards, recommended practices, and guides and all requests for information on NFPA procedures governing its codes and standards development process, including information on the procedures for requesting Formal Interpretations, for proposing Tentative Interim Amendments, and for proposing revisions to NFPA documents during regular revision cycles, should be sent to NFPA headquarters, addressed to the attention of the Secretary, Standards Council, NFPA, 1 Batterymarch Park, P.O. Box 9101, Quincy, MA 02269-9101.

For more information about NFPA, visit the NFPA website at www.nfpa.org.

Copyright National Fire Protection Association
Provided by IHS under license with NFPA
No reproduction or networking permitted without license from IHS
Not for Resale

Copyright © 2005, National Fire Protection Association, All Rights Reserved

NFPA 5000®

Building Construction and Safety Code®

2006 Edition

This edition of *NFPA 5000®*, *Building Construction and Safety Code®*, was prepared by the Committees on the Building Code and acted on by NFPA at its June Association Technical Meeting held June 6–10, 2005, in Las Vegas, NV. It was issued by the Standards Council on July 29, 2005, with an effective date of August 18, 2005, and supersedes all previous editions.

This edition of *NFPA 5000* was approved as an American National Standard on August 18, 2005.

Origin and Development of *NFPA 5000*

The inaugural edition of *NFPA 5000®*, *Building Construction and Safety Code®*, was issued in 2002 and was the first model building code developed using the full open consensus–based procedures accredited by the American National Standards Institute. The first edition marked the culmination of NFPA's more than 100 years of experience in developing voluntary consensus-based codes and standards related to the built environment. From the *Life Safety Code®* to the *National Electrical Code®*, sprinkler installation, fuel gas, and myriad other occupancy-specific and installation standards, NFPA codes and standards, as well as the codes and standards of other consensus-based standards development organizations, have addressed almost every aspect of the built environment. The significant gap in the code regime for the built environment, however, had been the lack of an open consensus–based model building code.

NFPA's *Building Code* endeavors to be responsive to the needs of the enforcement, user, and design communities and to be consistent with the other principles of code development that NFPA adheres to. *NFPA 5000* has also established a set of goals and objectives that work to deliver a safe, usable, and functional building at the end of the design process.

In addition to fire, a design hazard that has always been, and will always be, a major component of any building code, NFPA's other codes and standards address many of the subject areas and hazards that comprise a building code. *NFPA 5000* applies NFPA's collection of consensus codes and standards and adds requirements for other design provisions. Related natural hazards and building interior environmental issues that must be addressed are also included in the code.

The provisions of NFPA *101®*, *Life Safety Code®*, as they relate to new construction were a fundamental starting point for the content as well as the format and arrangement of *NFPA 5000* for the first edition. Consistent with NFPA's performance-based code initiative, *NFPA 5000* establishes a clear set of goals and objectives for specifying the expected outcome for occupant safety and building performance based upon the *Code* requirements. These goals and objectives also extend to the expected outcome for a building, its contents, and its mission, when applicable. These goals and objectives are critical in allowing those affected by codes to exercise the performance-based design approach. In addition, they can be used as a tool for evaluating equivalency provisions on project-specific jobs or designs.

When appropriate, additional criteria were derived from numerous sources, including the American Society of Civil Engineers (ASCE), the Federal Emergency Management Agency (FEMA), and the Access Board, among others. The all-hazard design provisions for *NFPA 5000* are rounded out with the use of criteria that include elements for a range of design loads and natural hazards.

This edition of *NFPA 5000* has revised several sections based on recent events, changes to federal regulations, and incorporation of new technologies among others. The 2006 edition has introduced an optional design approach for selection of allowable building and heights and areas that is based on construction type and enhanced fire compartments. Several changes have been incorporated to address certain means of egress design features, including an increase in stair width when large populations would be expected to utilize the stairs and a mandate for stairway descent devices in certain multistory buildings. Chapter 12 was completely revised to be consistent with the recent changes to the Americans with Disabilities Act Accessibility Guidelines (ADAAG) and the technical provisions of ICC/ANSI A117.1, *American National Standard for Accessible and Usable Buildings and Facilities*. Building rehabilitation

--`,,```,,,,````-`-`,,`,,`,`,,`---

Copyright National Fire Protection Association
Provided by IHS under license with NFPA
No reproduction or networking permitted without license from IHS
Not for Resale

requirements were enhanced to expand on the types of unsafe conditions that require remedial action and improvement. In addition, a fuller description of when a structural evaluation should be made has been added. Significant changes relating to assembly occupancies, in particular, night club occupancies, have been made to address the lessons learned from the 2003 events in Chicago and West Warwick, RI. New requirements for patient treatment and sleeping room suites have been included in Chapter 19 for health care occupancies. Placement and use rules for alcohol-based hand rub dispensing units have also been added for health care and ambulatory health care occupancies. A first-of-its-kind requirement in a U.S. building code for residential sprinklers in one- and two-family dwellings appears in Chapter 22. The hazardous contents provisions of Chapter 34 have been further refined and clarified to address new topics and subjects; this chapter continues to correlate with the various specialty codes and standards that address certain subjects, and a flow chart has been added to help select the appropriate protection scheme for the conditions given. The structural design and materials chapters have all been updated to recognize and reference the latest editions of key design documents such as ASCE 7, *Minimum Design Loads for Buildings and Other Structures*. Substantial changes were made to Chapter 38, "Roof Assemblies and Roof Structures," to address new requirements for subjects such as metal shingle roof coverings.

Copyright National Fire Protection Association
Provided by IHS under license with NFPA
No reproduction or networking permitted without license from IHS
Not for Resale

COMMITTEES ON BUILDING CODE
Technical Correlating Committee (BLD-AAC)

Jerry Wooldridge, *Chair*
Reedy Creek Improvement District, FL [E]

Wayne G. Carson, *Secretary*
Carson Associates, Incorporated, VA [SE]

Robert E. Solomon, *Nonvoting Secretary*
NFPA, MA

Diane D. Matthews, *Nonvoting Recording Secretary*
NFPA, MA

Carl F. Baldassarra, Schirmer Engineering Corporation, IL [U]
Rep. American Hotel & Lodging Association
Robert Bourke, Lynn Fire Department, MA [E]
Rep. International Fire Marshals Association
George Capko, Jr., FM Global, MA [I]
David S. Collins, The Preview Group, Incorporated, OH [SE]
Rep. American Institute of Architects
Salvatore DiCristina, Rutgers, The State University of New Jersey, NJ [E]
Rep. Building Code Development Committee
Russell P. Fleming, National Fire Sprinkler Association, NY [M]
David Frable, U.S. General Services Administration, IL [U]
Sam W. Francis, American Forest & Paper Association, PA [M]
Raymond N. Hansen, U.S. Department of the Air Force, FL [U]
Howard Hopper, Underwriters Laboratories Incorporated, CA [RT]
Bill Hopple, Tyco/SimplexGrinnell, CA [M]
Rep. National Electrical Manufacturers Association
Roland J. Huggins, American Fire Sprinkler Association, Incorporated, TX [IM]
Thomas W. Jaeger, Gage-Babcock & Associates, Incorporated, VA [U]
Rep. American Health Care Association
Joseph M. Jardin, New York City Fire Department, NY [C]
Rep. NFPA Fire Service Section
Gerald H. Jones, Kansas City, MO [E]
Rep. Building Seismic Safety Council/Code Resource Support Committee
Jerry W. Jones, Louisiana Department of Public Safety, LA [E]
Rep. National Conference of States on Building Codes & Standards Incorporated
John E. Kampmeyer, Triad Fire Protection Engineering Corporation, PA [SE]
Rep. National Society of Professional Engineers
Kenneth E. Lauziere, U.S. Office of the Architect of the Capitol, DC [E]
John V. Loscheider, Loscheider Engineering Company, WA [SE]
Rep. National Council of Structural Engineers Associations
Harry W. (Hank) Martin, American Iron and Steel Institute, CA [M]
Kevin G. McGuire, McGuire Associates, Incorporated, MA [C]
Joseph J. Messersmith, Jr., Portland Cement Association, VA [M]
Michael T. Newman, Johnson & Johnson, NJ [U]
Rep. NFPA Industrial Fire Protection Section
Ronald G. Nickson, National Multi Housing Council, DC [U]
Jake Pauls, Jake Pauls Consulting Services in Building Use & Safety, MD [C]
Rep. American Public Health Association
Jim Schwager, City of Portland, OR [E]

Alternates

Kathleen M. Eckert, Bank of New York, NY [U]
(Alt. to M. T. Newman)
John C. Harrington, FM Global, MA [I]
(Alt. to G. Capko)
Christopher P. Jones, Christopher P. Jones & Associates, NC [E]
(Alt. to G. H. Jones)
Kevin J. Kelly, National Fire Sprinkler Association, NY [M]
(Alt. to R. P. Fleming)
Mark Kluver, Portland Cement Association, CA [M]
(Alt. to J. J. Messersmith)
Russell B. Leavitt, TVA Fire and Life Safety, Incorporated, AZ [IM]
(Alt. to R. J. Huggins)
Thomas M. Moses, Reedy Creek Improvement District, FL [E]
(Alt. to J. Wooldridge)
Dennis L. Pitts, American Forest & Paper Association, TX [M]
(Alt. to S. W. Francis)
Joseph A. Simone, U.S. Department of the Navy, DC [U]
(Alt. to R. N. Hansen)
John Taecker, Underwriters Laboratories Incorporated, CA [RT]
(Alt. to H. Hopper)
Daniel M. Troxell, Washington, DC Fire Department, MD [C]
(Alt. to J. M. Jardin)
Leon F. Vinci, Health Promotion Consultants, NE [C]
(Alt. to J. Pauls)
Robert J. Wills, American Iron and Steel Institute, AL [M]
(Alt. to H. W. Martin)

Copyright National Fire Protection Association
Provided by IHS under license with NFPA
No reproduction or networking permitted without license from IHS
Not for Resale

Nonvoting

David A. de Vries, Firetech Engineering Incorporated, IL [SE]
Rep. TC on Means of Egress
William E. Fitch, Omega Point Laboratories Incorporated, TX [RT]
Rep. TC on Furnishings and Contents
Ralph Gerdes, Ralph Gerdes Consultants, LLC, IN [SE]
Rep. TC on Assembly Occupancies and Membrane Structures
Wayne D. Holmes, HSB Professional Loss Control, CT [I]
Rep. TC on Industrial, Storage, and Miscellaneous Occupancies
Morgan J. Hurley, Society of Fire Protection Engineers, MD [U]
Rep. TC on Fundamentals
Philip R. Jose, Guilderland, NY [SE]
Rep. TC on Board and Care Facilities
Richard L. Klinker, Klinker & Associates, Incorporated, MD [SE]
Rep. TC on Building Service and Fire Protection Equipment
James K. Lathrop, Koffel Associates, Incorporated, CT [SE]
Rep. TC on Residential Occupancies
James R. Quiter, Arup Fire, CA [SE]
Rep. Safety to Life Correlating Committee
John A. Rickard, Foundation Communities, TX [SE]
Rep. TC on Building Systems
Eric R. Rosenbaum, Hughes Associates, Incorporated, MD [SE]
Rep. TC on Fire Protection Features
Ed Schultz, Code Consultants, Incorporated, MO [SE]
Rep. TC on Mercantile and Business Occupancies
Catherine L. Stashak, Des Plaines, IL [E]
Rep. TC on Educational and Day-Care Occupancies
Joseph H. Versteeg, Versteeg Associates, CT [E]
Rep. TC on Materials
Peter J. Willse, GE Global Asset Protection Services, CT [I]
Rep. TC on Structures and Construction

Robert E. Solomon, NFPA Staff Liaison

This list represents the membership at the time the Committee was balloted on the final text of this edition. Since that time, changes in the membership may have occurred. A key to classifications is found at the back of the document.

NOTE: Membership on a committee shall not in and of itself constitute an endorsement of the Association or any document developed by the committee on which the member serves.

Committee Scope: This committee shall have primary responsibility for documents or portions of documents on the design and construction of every building or structure, including structural design methods and techniques, as well as the design of integrated building systems for health, safety, comfort, and convenience.

Technical Committee on Assembly Occupancies and Membrane Structures (BLD-AXM)

Ralph Gerdes, *Chair*
Ralph Gerdes Consultants, LLC, IN [SE]

Ron Coté, *Nonvoting Secretary*
National Fire Protection Association, MA

Scott W. Adams, Park City Fire Service District, UT [E]
Rep. International Fire Marshals Association
Stanton M. Alexander, North American Testing Company, FL [M]
Weston E. Bacon, Jr., Bacon Hedland Management, Incorporated, IL [U]
Rep. International Association of Exposition Management
Scott R. Bartlett, Tyco/SimplexGrinnell, MA [M]
Rep. National Electrical Manufacturers Association
George D. Bushey, Rosser International, GA [SE]
William Conner, Schuler & Shook, Incorporated, IL [SE]
Rep. American Society of Theater Consultants
Bhola Dhume, City of New Orleans, LA [E]
Ronald R. Farr, Kalamazoo Township Fire Department, MI [E]
Rep. Michigan Fire Inspectors Society
Robert D. Fiedler, City of Lincoln, NE [E]
William E. Fitch, Omega Point Laboratories Incorporated, TX [RT]
Wesley W. Hayes, Polk County Fire Services Division, FL [E]
Rep. International Fire Marshals Association
Roland J. Huggins, American Fire Sprinkler Association, Incorporated, TX [IM]
Jonathan Humble, American Iron and Steel Institute, CT [M]
Kevin J. Kelly, National Fire Sprinkler Association, NY [M]
John Lake, Marion County Fire Rescue, FL [E]
Rep. NE Florida Fire Prevention Association
Vern L. Martindale, Church of Jesus Christ of Latter-day Saints, UT [U]
Joseph J. Messersmith, Jr., Portland Cement Association, VA [M]
Gregory R. Miller, Code Consultants, Incorporated, MO [U]
Rep. National Association of Theatre Owners
Keith C. Nagelski, Soft Play, L.L.C., NC [M]
Rep. International Play Equipment Manufacturers Association
Jake Pauls, Jake Pauls Consulting Services in Building Use & Safety, MD [SE]
Steven W. Peavey, Altamonte Springs Fire Department, FL [E]
Rep. Florida Fire Marshals & Inspectors Association
Larry B. Perkins, RBC Center/Carolina Hurricanes, NC [U]
Rep. International Association of Assembly Managers, Incorporated
John William Pritchett, Athens-Clarke County Fire Department, GA [E]
Ed Roether, HOK SVE, MO [U]
Karl G. Ruling, Entertainment Services & Technology Association, NY [U]
Rep. U.S. Institute for Theatre Technology
Philip R. Sherman, Philip R. Sherman, PE, NH [SE]
Jeffrey S. Tubbs, Arup Fire, MA [SE]
Daniel R. Victor, Interkal, LLC, MI [M]
Rep. National School Supply & Equipment Association
Paul L. Wertheimer, Crowd Management Strategies, IL [SE]

--`,,```,,,,````-`-`,,`,,`,`,,`---

Copyright National Fire Protection Association
Provided by IHS under license with NFPA
No reproduction or networking permitted without license from IHS
Not for Resale

Alternates

Gene Boecker, Code Consultants, Incorporated, MO [U]
(Alt. to G. R. Miller)
David Cook, Ralph Gerdes Consultants, LLC, IN [SE]
(Alt. to R. Gerdes)
Jerrold S. Gorrell, City of Phoenix, AZ [U]
(Alt. to K. G. Ruling)
Mike Hayward, Little Tikes Commercial Play Systems Inc., MO [M]
(Alt. to K. C. Nagelski)
Eugene Leitermann, Theatre Projects Consultants, Incorporated, CT [SE]
(Alt. to W. Conner)
Vern T. Lewis, Church of Jesus Christ of Latter-day Saints, UT [U]
(Alt. to V. L. Martindale)
Steven J. Scandaliato, Scandaliato Design Group, Incorporated, CO [IM]
(Alt. to R. J. Huggins)
Stephen V. Skalko, Portland Cement Association, GA [M]
(Alt. to J. J. Messersmith)
Mark V. Smith, Gainesville Fire Rescue Department, FL [E]
(Alt. to J. Lake)
Robert B. Treiber, National Fire Sprinkler Association, Incorporated, OH [M]
(Alt. to K. J. Kelly)
Robert J. Wills, American Iron and Steel Institute, AL [M]
(Alt. to J. Humble)

Ron Coté, NFPA Staff Liaison

This list represents the membership at the time the Committee was balloted on the final text of this edition. Since that time, changes in the membership may have occurred. A key to classifications is found at the back of the document.

NOTE: Membership on a committee shall not in and of itself constitute an endorsement of the Association or any document developed by the committee on which the member serves.

Committee Scope: This Committee shall have primary responsibility for documents on protection of human life and property from fire and other circumstances capable of producing similar consequences, and on the non-emergency and emergency movement of people in assembly occupancies, tents, and membrane structures.

Technical Committee on Board and Care Facilities (BLD-BCF)

Philip R. Jose, *Chair*
Guilderland, NY [SE]

Gregory E. Harrington, *Nonvoting Secretary*
National Fire Protection Association, MA

Gregory J. Austin, Gentex Corporation, MI [M]
Rep. National Electrical Manufacturers Association
Warren D. Bonisch, Schirmer Engineering Corporation, TX [I]
Harry L. Bradley, Maryland State Fire Marshals Office, MD [E]
Rep. International Fire Marshals Association
Philip C. Favro, Philip C. Favro & Associates, CA [SE]
Laura A. Hoffman, Volunteer State Community College, TN [SE]
Kenneth E. Isman, National Fire Sprinkler Association, NY [M]
David Ray Kiely, The Charles Lea Center, SC [U]
Rep. American Network of Community Options & Resources
James K. Lathrop, Koffel Associates, Incorporated, CT [SE]
John E. Mahoney, Gage Babcock & Associates, Incorporated, VA [U]
Rep. American Health Care Association
Paul E. Patty, Underwriters Laboratories Incorporated, IL [RT]
Francis G. Reuer, U.S. Department of Health and Human Services, CO [E]
James W. Rice, U.S. Department of Veterans Affairs, MI [U]

Alternates

Kerry M. Bell, Underwriters Laboratories Incorporated, IL [RT]
(Alt. to P. E. Patty)
Margaret R. Engwer, U.S. Department of Veterans Affairs, PA [U]
(Alt. to J. W. Rice)
Oystein (Sam) F. Husoe, National Fire Sprinkler Association, CA [M]
(Alt. to K. E. Isman)
Cindy Mahan, Friendship Community Care, Incorporated, AR [U]
(Alt. to D. R. Kiely)
James F. Woodford, Tyco/SimplexGrinnell, MA [M]
(Alt. to G. J. Austin)
Mayer D. Zimmerman, U.S. Department of Health and Human Services, MD [E]
(Alt. to F. G. Reuer)

Nonvoting

Harold E. Nelson, Hughes Associates, Incorporated, VA [SE]
(Member Emeritus)

Gregory E. Harrington, NFPA Staff Liaison

This list represents the membership at the time the Committee was balloted on the final text of this edition. Since that time, changes in the membership may have occurred. A key to classifications is found at the back of the document.

NOTE: Membership on a committee shall not in and of itself constitute an endorsement of the Association or any document developed by the committee on which the member serves.

Committee Scope: This Committee shall have primary responsibility for documents on protection of human life and property from fire and other circumstances capable of producing similar consequences, and on the emergency movement of people in residential board and care facilities.

--`,,```,,,,````-`-`,,`,,`,`,,`---

Copyright National Fire Protection Association
Provided by IHS under license with NFPA
No reproduction or networking permitted without license from IHS
Not for Resale

Technical Committee on Building Construction (BLD-BLC)

Peter J. Willse, *Chair*
GE Global Asset Protection Services, CT [I]
Rep. GE Global Asset Protection Services

Bonnie Manley, *Nonvoting Secretary*
National Fire Protection Association, MA

Peter J. Barbadoro, FireSmart Building Technology Incorporated, MA [IM]
Jesse J. Beitel, Hughes Associates, Incorporated, MD [SE]
Robert M. Berhinig, Underwriters Laboratories Incorporated, IL [RT]
David S. Collins, The Preview Group, Incorporated, OH [SE]
Rep. American Institute of Architects
Richard J. Davis, FM Global, MA [I]
Alan J. Dopart, Willis of New Jersey, NJ [I]
Victor L. Dubrowski, Code Consultants, Incorporated, MO [SE]
Bruce A. Edwards, Liberty Mutual Property, MA [I]
Rep. Property Casualty Insurers Association of America
Byron (BJ) Foster, State of California, CA [E]
David Frable, U.S. General Services Administration, IL [U]
Sam W. Francis, American Forest & Paper Association, PA [M]
Daniel F. Gemeny, The RJA Group, Incorporated, CA [SE]
Joseph T. Holland, III, Hoover Treated Wood Products, Incorporated, FL [M]
Gerald Kelliher, Westinghouse Savannah River Company, SC [U]
Kevin J. Kelly, National Fire Sprinkler Association, NY [M]
Joseph J. Messersmith, Jr., Portland Cement Association, VA [M]
Kathleen Reid, Intel Corporation, NM [U]
Rep. Semiconductor Industry Association
Sarah A. Rice, Schirmer Engineering Corporation, OH [I]
Brad Schiffer, Brad Schiffer/Taxis, Incorporated, FL [SE]
Robert A. Wessel, Gypsum Association, DC [M]
Robert J. Wills, American Iron and Steel Institute, AL [M]

Alternates

Robert G. Backstrom, Underwriters Laboratories Incorporated, IL [RT]
(Alt. to R. M. Berhinig)
Brenda L. Bronson, U.S. General Services Administration, CO [U]
(Alt. to D. Frable)
Michael A. Gardner, Gypsum Association, DC [M]
(Alt. to R. A. Wessel)
William E. Koffel, Koffel Associates, Incorporated, MD [U]
(Alt. to K. Reid)
Renato R. Molina, The RJA Group, Incorporated, FL [SE]
(Alt. to D. F. Gemeny)
Dennis L. Pitts, American Forest & Paper Association, TX [M]
(Alt. to S. W. Francis)
Stephen V. Skalko, Portland Cement Association, GA [M]
(Alt. to J. J. Messersmith)
Rick Thornberry, The Code Consortium, Incorporated, CA [M]
(Voting Alt. to W.R. Grace Rep.)
Robert B. Treiber, National Fire Sprinkler Association, OH [M]
(Alt. to K. J. Kelly)
Ronald R. Walker, Charlevoix, MI [M]
(Alt. to J. T. Holland)

Bonnie E. Manley, NFPA Staff Liaison

This list represents the membership at the time the Committee was balloted on the final text of this edition. Since that time, changes in the membership may have occurred. A key to classifications is found at the back of the document.

NOTE: Membership on a committee shall not in and of itself constitute an endorsement of the Association or any document developed by the committee on which the member serves.

Committee Scope: This Committee shall have primary responsibility for documents on the selection and design of types of building construction, exterior walls, building height and area, firewalls, and fire barrier walls, as they relate to the protection of life and property from fire. For the processing of NFPA 5000, Chapter 7, and Sections 8.3 and 8.4, this Committee reports directly to the NFPA 5000 TCC; whereas, for the processing of NFPA 220 and NFPA 221, this Committee does not report to the NFPA 5000 TCC.

Copyright National Fire Protection Association
Provided by IHS under license with NFPA
No reproduction or networking permitted without license from IHS
Not for Resale

Technical Committee on Building Service and Fire Protection Equipment (BLD-BSF)

Richard L. Klinker, *Chair*
Klinker & Associates, Incorporated, MD [SE]

Gregory E. Harrington, *Nonvoting Secretary*
National Fire Protection Association, MA

Keith A. Ball, Tyco/SimplexGrinnell, FL [M]
Rep. National Electrical Manufacturers Association
Harry L. Bradley, Maryland State Fire Marshals Office, MD [E]
Rep. International Fire Marshals Association
Pat D. Brock, Oklahoma State University, OK [SE]
Phillip A. Brown, American Fire Sprinkler Association, Incorporated, TX [IM]
Paul M. Donga, Boston Fire Department, MA [E]
Edward A. Donoghue, Edward A. Donoghue Associates, Incorporated, NY [M]
Rep. National Elevator Industry Incorporated
Kenneth E. Isman, National Fire Sprinkler Association, NY [M]
Joseph M. Jardin, New York City Fire Department, NY [C]
Rep. NFPA Fire Service Section
Ignatius Kapalczynski, Connecticut Department of Public Safety, CT [E]
Roy C. (Chuck) Kimball, Brooks Equipment Company, Incorporated, NC [M]
Rep. Fire Equipment Manufacturers' Association
David P. Klein, U.S. Department of Veterans Affairs, MD [U]
Dennis A. Lockard, Newport Beach Fire Department, CA [E]
Rep. Western Fire Chiefs Association
Roger L. McDaniel, Florida Department of Corrections, FL [U]
Richard R. Osman, Schirmer Engineering Corporation, IL [I]
Dinesh K. Patel, U.S. Department of the Navy, CA [U]
Martin H. Reiss, The RJA Group, Incorporated, MA [SE]
Lawrence J. Shudak, Underwriters Laboratories Incorporated, IL [RT]
Carl Dewayne Wren, Austin Fire Department, TX [E]

Alternates

Lisa Marie Bossert, Schirmer Engineering Corporation, NC [I]
(Alt. to R. R. Osman)
James D. Brown, Oklahoma State University, OK [SE]
(Alt. to P. D. Brock)
Greg Gottlieb, Hauppauge Fire District, NY [C]
(Alt. to J. M. Jardin)
Claudia Hagood, Klinker & Associates, Incorporated, MD [SE]
(Alt. to R. L. Klinker)
Thomas P. Hammerberg, Automatic Fire Alarm Association, Incorporated, FL [M]
(Voting Alt. to AFAA Rep.)
Kevin J. Kelly, National Fire Sprinkler Association, NY [M]
(Alt. to K. E. Isman)
Peter A. Larrimer, U.S. Department of Veterans Affairs, PA [U]
(Alt. to D. P. Klein)
Stephen M. Leyton, Protection Design and Consulting, CA [IM]
(Alt. to P. A. Brown)
John J. McSheffrey, Jr., MIJA, Incorporated, MA [M]
(Alt. to R. C. Kimball)
Gary L. Nuschler, Otis Elevator Company, CT [M]
(Alt. to E. A. Donoghue)
Andrew M. Schneider, Maryland State Fire Marshals Office, MD [E]
(Alt. to H. L. Bradley)
Randolph W. Tucker, The RJA Group, Incorporated, TX [SE]
(Alt. to M. H. Reiss)

Gregory E. Harrington, NFPA Staff Liaison

This list represents the membership at the time the Committee was balloted on the final text of this edition. Since that time, changes in the membership may have occurred. A key to classifications is found at the back of the document.

NOTE: Membership on a committee shall not in and of itself constitute an endorsement of the Association or any document developed by the committee on which the member serves.

Committee Scope: This Committee shall have primary responsibility for documents on the application of fire protection systems including detection, alarm, and suppression, and the life safety impact of various building systems.

--`,,```,,,,````-`-`,,`,,`,`,,`---
Copyright National Fire Protection Association
Provided by IHS under license with NFPA
No reproduction or networking permitted without license from IHS
Not for Resale

Technical Committee on Building Systems (BLD-BSY)

John A. Rickard, *Chair*
Foundation Communities, TX [SE]

Allan Fraser, *Nonvoting Secretary*
National Fire Protection Association, MA

Stanton M. Alexander, North American Testing Company, FL [U]
William Ambrefe, City of Beverly, MA [E]
Dennis W. Bradshaw, Ralph Gerdes Consultants, LLC, IN [SE]
Edward A. Donoghue, Edward A. Donoghue Associates, Incorporated, NY [M]
Rep. National Elevator Industry Incorporated
Joshua W. Elvove, U.S. Department of Veterans Affairs, CO [U]
Phil Forner, Allendale Heating Company Incorporated, MI [IM]
Rep. Air Conditioning Contractors of America
Raymond N. Hansen, U.S. Department of the Air Force, FL [U]
Peter Hays, Newark, OH [M]
Rep. North American Insulation Manufacturers Association
A. Hal Key, City of Mesa Fire Department, AZ [E]
Joe McElvaney, City of Phoenix, AZ [E]
Kevin G. McGuire, McGuire Associates, Incorporated, NY [C]
John E. Munroe, Earth Tech (Canada) Incorporated, Canada [SE]
Jim Pauley, Square D Company, KY [M]
Rep. National Electrical Code Correlating Committee
Michael J. Reeser, Santa Rosa Fire Equipment Service Incorporated, CA [IM]
Rep. California Automatic Fire Alarm Association Incorporated
Mark A. Roberts, Louisiana Office of State Fire Marshal, LA [E]
Stephen Rondinelli, The RJA Group, Incorporated, CO [SE]
Shelley Siegel, Accessible Interiors' Network, Incorporated, FL [SE]
Rep. American Society of Interior Designers
Robert Van Becelaere, Ruskin Manufacturing, MO [M]
Rep. American Society of Mechanical Engineers
William A. Webb, Shirmer Engineering Corporation, IL [I]
Rep. American Society for Heating, Refrigeration & Air Conditioning Engineers Incorporated

Alternates

Shane M. Clary, Bay Alarm Company, CA [IM]
(Alt. to M. J. Reese)
David Cook, Ralph Gerdes Consultants, LLC, IN [SE]
(Alt. to D. W. Bradshaw)
Charles C. Cottrell, North American Insulation Manufacturers Association, VA [M]
(Alt. to P. Hays)
Joshua D. Greene, The RJA Group, Incorporated, IL [SE]
(Alt. to S. Rondinelli)
Gary L. Nuschler, Otis Elevator Company, CT [M]
(Alt. to E. A. Donoghue)
Jack Wells, Pass & Seymour/Legrand, NY [M]
(Alt. to J.Pauley)

Allan Fraser, NFPA Staff Liaison

This list represents the membership at the time the Committee was balloted on the final text of this edition. Since that time, changes in the membership may have occurred. A key to classifications is found at the back of the document.

NOTE: Membership on a committee shall not in and of itself constitute an endorsement of the Association or any document developed by the committee on which the member serves.

Committee Scope: This Committee shall have primary responsibility for documents on the application of various building systems and features that relate to convenience, health, comfort, and access to a building.

Technical Committee on Detention and Correctional Occupancies (BLD-DET)

Thomas W. Jaeger, *Chair*
Gage-Babcock & Associates Incorporated, VA [SE]

Ron Coté, *Nonvoting Secretary*
National Fire Protection Association, MA

James R. Ambrose, Code Consultants, Incorporated, MO [SE]
David L. Bondor, St. Paul Fire and Marine, TX [I]
Rep. American Society of Safety Engineers
Peter J. Collins, U.S. Department of Justice, DC [U]
Randy Gaw, Correctional Service of Canada, Canada [E]
Patrick G. Gordon, Philadelphia Prison System, PA [U]
Timothy (T.J.) Gottwalt, ESSEX Industries, Incorporated, CT [M]
Rep. Builders Hardware Manufacturers Association
Kenneth E. Isman, National Fire Sprinkler Association, NY [M]
William E. Koffel, Koffel Associates, Incorporated, MD [SE]
Roger L. McDaniel, Florida Department of Corrections, FL [U]
Jack McNamara, Bosch Security Systems, NY [M]
Rep. National Electrical Manufacturers Association
E. Eugene Miller, Washington, DC [SE]
Jerry Nealy, Cumulus Fibres, Incorporated, NC [M]
Rep. Institutional Bedding Manufacturers Association

Copyright National Fire Protection Association
Provided by IHS under license with NFPA
No reproduction or networking permitted without license from IHS
Not for Resale

Brian C. Pavey, Folger Adam Security Incorporated, IL [M]
Robert R. Perry, Robert Perry Associates Incorporated, IL [M]
Rep. Door & Hardware Institute
Kenneth J. Schwartz, Schirmer Engineering Corporation, IL [I]
Wayne S. Smith, Texas State Fire Marshal, TX [E]
Rep. International Fire Marshals Association
David W. Spence, Corrections Corporation of America, TN [U]

Alternates

A. Larry Iseminger, Jr., Maryland State Fire Marshals Office, MD [E]
(Alt. to W. S. Smith)
Kevin J. Kelly, National Fire Sprinkler Association, NY [M]
(Alt. to K. E. Isman)
Kurt A. Roeper, Ingersoll Rand Security and Safety, OH [M]
(Alt. to T.J. Gottwalt)
Ralph R. Winter, Code Consultants, Incorporated, MO [SE]
(Alt. to J. R. Ambrose)
John Younghusband, Schirmer Engineering Corporation, CA [I]
(Alt. to K. J. Schwartz)

Ron Coté, NFPA Staff Liaison

This list represents the membership at the time the Committee was balloted on the final text of this edition. Since that time, changes in the membership may have occurred. A key to classifications is found at the back of the document.

NOTE: Membership on a committee shall not in and of itself constitute an endorsement of the Association or any document developed by the committee on which the member serves.

Committee Scope: This Committee shall have primary responsibility for documents on protection of human life and property from fire and other circumstances capable of producing similar consequences, and on the emergency movement of people in detention and correctional occupancies.

Technical Committee on Educational and Day-Care Occupancies (BLD-END)

Catherine L. Stashak, *Chair*
Des Plaines, IL [E]
Rep. Illinois Fire Inspectors Association

Ron Coté, *Nonvoting Secretary*
National Fire Protection Association, MA

Scott R. Bartlett, Tyco/SimplexGrinnell, MA [M]
Samuel S. Dannaway, S. S. Dannaway Associates, Incorporated, HI [SE]
Victor L. Dubrowski, Code Consultants, Incorporated, MO [SE]
Douglas R. Freels, Performance Design Technologies, TN [SE]
Dominick G. Kass, National Fire Sprinkler Association, NY [M]
Vern L. Martindale, Church of Jesus Christ of Latter-day Saints, UT [U]
Erin A. M. Oneisom, U.S. Air Force, AE [U]
Michael L. Sinsigalli, Windsor Locks Fire Department, CT [E]
Aleksy L. Szachnowicz, Anne Arundel County Public Schools, MD [U]
Ralph J. Warburton, University of Miami, FL [SE]
Kenneth Wood, Office of the Illinois State Fire Marshal, IL [E]

Alternates

Kevin J. Kelly, National Fire Sprinkler Association, NY [M]
(Alt. to D. G. Kass)
Amy J. Murdock, Code Consultants, Incorporated, MO [SE]
(Alt. to V. L. Dubrowski)
Roger B. Rudy, Performance Design Technologies, LLC, TN [SE]
(Alt. to D. R. Freels)
Fred K. Walker, U.S. Department of the Air Force, FL [U]
(Alt. to E. A. M. Oneisom)

Ron Coté, NFPA Staff Liaison

This list represents the membership at the time the Committee was balloted on the final text of this edition. Since that time, changes in the membership may have occurred. A key to classifications is found at the back of the document.

NOTE: Membership on a committee shall not in and of itself constitute an endorsement of the Association or any document developed by the committee on which the member serves.

Committee Scope: This Committee shall have primary responsibility for documents on protection of human life and property from fire and other circumstances capable of producing similar consequences, and on the emergency movement of people in educational occupancies and day-care occupancies.

Copyright National Fire Protection Association
Provided by IHS under license with NFPA
No reproduction or networking permitted without license from IHS
Not for Resale

Technical Committee on Fire Protection Features (BLD-FIR)

Eric R. Rosenbaum, *Chair*
Hughes Associates, Incorporated, MD [SE]

Milosh T. Puchovsky, *Nonvoting Secretary*
National Fire Protection Association, MA

Carl F. Baldassarra, Schirmer Engineering Corporation, IL [I]
John F. Bender, Maryland Office of State Fire Marshal, MD [E]
Rep. International Fire Marshals Association
Robert M. Berhinig, Underwriters Laboratories Incorporated, IL [RT]
Gregory J. Cahanin, St. Petersburg, FL [U]
Rep. Louisiana State Firemen's Association
Brian L. Eklow, Aon Risk Consultants, IL [I]
Sam W. Francis, American Forest & Paper Association, PA [M]
Ralph Gerdes, Ralph Gerdes Consultants, LLC, IN [SE]
Wayne D. Holmes, HSB Professional Loss Control, CT [I]
Jonathan Humble, American Iron and Steel Institute, CT [M]
Ignatius Kapalczynski, Connecticut Department of Public Safety , CT [E]
Marshall A. Klein, Marshall A. Klein & Associates, Incorporated, MD [SE]
William E. Koffel, Koffel Associates, Incorporated, MD [M]
Rep. Glazing Industry Code Committee
Vickie J. Lovell, InterCode Incorporated, FL [M]
Rep. Air Movement & Control Association
Jeffrey A. Maddox, The RJA Group, Incorporated, CA [SE]
John W. McCormick, Code Consultants, Incorporated, MO [SE]
Joseph J. Messersmith, Jr., Portland Cement Association, VA [M]
Jon W. Pasqualone, Martin County Board of County Commissioners, FL [E]
Rep. Florida Fire Marshals & Inspectors Association
Kurt A. Roeper, Ingersoll Rand Security and Safety, OH [M]
Rep. Steel Door Institute
Kathleen Taraba, Rolling Plains Construction, Incorporated, CO [IM]
Rep. Firestop Contractors International Association
Kenneth Wood, Office of the Illinois State Fire Marshal, IL [E]

Alternates

Donald W. Belles, Koffel Associates, Incorporated, TN [M]
(Alt. to W. E. Koffel)
Joseph A. Brooks, Air Movement & Control Association International, IL [M]
(Alt. to V. J. Lovell)
Edward K. Budnick, Hughes Associates, Incorporated, MD [SE]
(Alt. to E. R. Rosenbaum)
Joseph A. Castellano, The RJA Group, Incorporated, GA [SE]
(Alt. to J. A. Maddox)
Charles B. Clark, Jr., Brick Industry Association, VA [M]
(Voting Alt. to BIA Rep.)
David Cook, Ralph Gerdes Consultants, LLC, IN [SE]
(Alt. to R. Gerdes)
John F. Devlin, Schirmer Engineering Corporation, MD [I]
(Alt. to C. F. Baldassarra)
Jack Gump, HSB Professional Loss Control, TN [I]
(Alt. to W. D. Holmes)
David M. Hammerman, Marshall A. Klein and Associates, Incorporated, MD [SE]
(Alt. to M. A. Klein)
Thomas R. Janicak, Ceco Door Products, TN [M]
(Alt. to K. A. Roeper)
Mark Kluver, Portland Cement Association, CA [M]
(Alt. to J. J. Messersmith)
David A. Lewis, Code Consultants, Incorporated, MO [SE]
(Alt. to J. W. McCormick)
William J. McHugh, Jr., Firestop Contractors International Association, IL [IM]
(Alt. to K. Taraba)
Andrew M. Schneider, Maryland Office of State Fire Marshal, MD [E]
(Alt. to J. F. Bender)
David P. Tyree, American Forest & Paper Association, CO [M]
(Alt. to S. W. Francis)
Robert J. Wills, American Iron and Steel Institute, AL [M]
(Alt. to J. Humble)

Nonvoting

Michael Earl Dillon, Dillon Consulting Engineers, Incorporated, CA [SE]
Rep. TC on Air Conditioning

Milosh T. Puchovsky, NFPA Staff Liaison

This list represents the membership at the time the Committee was balloted on the final text of this edition. Since that time, changes in the membership may have occurred. A key to classifications is found at the back of the document.

NOTE: Membership on a committee shall not in and of itself constitute an endorsement of the Association or any document developed by the committee on which the member serves.

Committee Scope: This Committee shall have primary responsibility for documents on construction compartmentation, including the performance of assemblies, openings, and penetrations, as related to the protection of life and property from fire and other circumstances capable of producing similar consequences.

Copyright National Fire Protection Association
Provided by IHS under license with NFPA
No reproduction or networking permitted without license from IHS
Not for Resale

Technical Committee on Fundamentals (BLD-FUN)

Morgan J. Hurley, *Chair*
Society of Fire Protection Engineers, MD [U]

Ron Coté, *Nonvoting Secretary*
National Fire Protection Association, MA

Thomas H. Allen, Smoke Guard Corporation, ID [U]
Rep. American Institute of Architects
Robert E. Bachman, Robert E. Bachman, Consulting Structural Engineer, CA [SE]
Rep. National Council of Structural Engineers Associations
Wayne G. Carson, Carson Associates, Incorporated, VA [SE]
Amy Y. Cheng, Clark County Department of Development Services, NV [E]
James E. Churchill, Schirmer Engineering Corporation, CA [I]
Salvatore DiCristina, Rutgers, The State University of New Jersey, NJ [E]
Barbara Ebstein, Vinick Associates, Incorporated, CT [U]
Rep. American Society of Interior Designers
Robert J. Eugene, Underwriters Laboratories Incorporated, WA [RT]
Ben Greene, City of Englewood, CO [E]
Norman E. Groner, John Jay College of Criminal Justice, NY [SE]
David J. Jacoby, Arup Fire, NY [SE]
David P. Klein, U.S. Department of Veterans Affairs, MD [U]
James A. Landmesser, U.S. Department of Energy, TN [E]
James K. Lathrop, Koffel Associates, Incorporated, CT [SE]
Jake Pauls, Jake Pauls Consulting Services in Building Use & Safety, MD [C]
Rep. American Public Health Association
Stephen V. Skalko, Portland Cement Association, GA [M]
Jeffrey B. Stone, American Forest & Paper Association, FL [M]
Victoria B. Valentine, National Fire Sprinkler Association, NY [M]
John M. Watts, Jr., Fire Safety Institute, VT [SE]
Robert J. Wills, American Iron and Steel Institute, AL [M]
Steven F. Wydeveld, Will County Land Use, IL [E]

Alternates

Eugene A. Cable, U.S. Department of Veterans Affairs, NY [U]
(Alt. to D. P. Klein)
Robert M. Carasitti, Schirmer Engineering Corporation, MA [I]
(Alt. to J. E. Churchill)
Jonathan Humble, American Iron and Steel Institute, CT [M]
(Alt. to R. J. Wills)
Mark Kluver, Portland Cement Association, CA [M]
(Alt. to S. V. Skalko)
John V. Loscheider, Loscheider Engineering Company, WA [SE]
(Alt. to R. E. Bachman)
Kimberly A. Marks, The Marks Design Group, Incorporated, TX [U]
(Alt. to B. Ebstein)
Eric N. Mayl, Koffel Associates, Incorporated, MD [SE]
(Alt. to J. K. Lathrop)
Rodney A. McPhee, Canadian Wood Council, Canada [M]
(Alt. to J. B. Stone)
Rick Thornberry, The Code Consortium, Incorporated, CA [M]
(Voting Alt. to W.R. Grace Rep.)
John R. Wiggins, Underwriters Laboratories Incorporated, NC [RT]
(Alt. to R. J. Eugene)

Nonvoting

Pichaya Chantranuwat, Fusion Consultants Company Limited/Thailand, Thailand [SE]

Ron Coté, NFPA Staff Liaison

This list represents the membership at the time the Committee was balloted on the final text of this edition. Since that time, changes in the membership may have occurred. A key to classifications is found at the back of the document.

NOTE: Membership on a committee shall not in and of itself constitute an endorsement of the Association or any document developed by the committee on which the member serves.

Committee Scope: This Committee shall have primary responsibility for documents on the basic goals, objectives, performance requirements, and definitions for protection of human life and property from fire, earthquake, flood, wind, and other circumstances capable of producing similar consequences, and on the nonemergency and emergency movement of people.

Copyright National Fire Protection Association
Provided by IHS under license with NFPA
No reproduction or networking permitted without license from IHS
Not for Resale

Technical Committee on Furnishings and Contents (BLD-FUR)

William E. Fitch, *Chair*
Omega Point Laboratories Incorporated, TX [RT]

Milosh T. Puchovsky, *Nonvoting Secretary*
National Fire Protection Association, MA

Vytenis Babrauskas, Fire Science and Technology Incorporated, WA [SE]
Lisa Bonneville, Bonneville Design, MA [U]
Rep. American Society of Interior Designers
Eugene A. Cable, U.S. Department of Veterans Affairs, NY [U]
Frederic B. Clarke, Benjamin Clarke Associates, Incorporated, VA [SE]
Paul Dillon, Southern Polytechnic State University, GA [M]
Rep. Sleep Products Safety Council
Pravinray D. Gandhi, Underwriters Laboratories Incorporated, IL [RT]
Marcelo M. Hirschler, GBH International, CA [SE]
E. Ken McIntosh, Carpet and Rug Institute, GA [M]
Henry Paszczuk, City of New Britain Fire Department, CT [E]
T. Hugh Talley, Hugh Talley Company, TN [M]
Rep. American Furniture Manufacturers Association

Alternates

James K. Lathrop, Koffel Associates, Incorporated, CT [M]
(Alt. to E. K. McIntosh)
James V. Ryan, Potomac, MD [SE]
(Alt. to F. B. Clarke)
Shelley Siegel, Accessible Interiors' Network, Incorporated, FL [U]
(Alt. to L. Bonneville)

Milosh T. Puchovsky, NFPA Staff Liaison

This list represents the membership at the time the Committee was balloted on the final text of this edition. Since that time, changes in the membership may have occurred. A key to classifications is found at the back of the document.

NOTE: Membership on a committee shall not in and of itself constitute an endorsement of the Association or any document developed by the committee on which the member serves.

Committee Scope: This Committee shall have primary responsibility for documents on limiting the impact of furnishings and building contents effect on protection of human life and property from fire and other circumstances capable of producing similar consequences, and on the emergency movement of people.

Technical Committee on Health Care Occupancies (BLD-HEA)

Daniel J. O'Connor, *Chair*
Schirmer Engineering Corporation, IL [I]

Ron Coté, *Nonvoting Secretary*
National Fire Protection Association, MA

James R. Ambrose, Code Consultants, Incorporated, MO [SE]
William N. Brooks, Eichleay Engineers, Incorporated, PA [SE]
Kenneth E. Bush, Maryland State Fire Marshals Office, MD [E]
Rep. International Fire Marshals Association
Wayne G. Carson, Carson Associates, Incorporated, VA [SE]
Robert J. Carubia, Jr., West Virginia University Hospitals, WV [U]
Michael A. Crowley, The RJA Group, Incorporated, TX [SE]
Samuel S. Dannaway, S. S. Dannaway Associates, Incorporated, HI [SE]
Rep. American Society of Safety Engineers
Buddy Dewar, National Fire Sprinkler Association, FL [M]
Douglas S. Erickson, American Society for Healthcare Engineering, VI [U]
Kenneth S. Faulstich, U.S. Department of Veterans Affairs, DC [U]
John E. Fishbeck, Joint Commission on Accreditation of Healthcare Organizations, IL [E]
Antonio Freire, Axa Courtage, France [I]
Donald W. Harris, California Office of Health Planning & Development, CA [E]
Thomas W. Jaeger, Gage-Babcock & Associates, Incorporated, VA [U]
Rep. American Health Care Association
John I. Mills, Beery, Rio & Associates, VA [SE]
Kirby W. Perry, Kirby W. Perry Architects & Associates Incorporated, TX [SE]
Rep. American Institute of Architects
Peter P. Petresky, Pennsylvania Department of Health, PA [E]
Rep. Association of Health Facility Survey Agencies
Brian Prediger, U.S. Department of the Army, MD [U]
George F. Stevens, U.S. Department of Health and Human Services, AZ [E]
John S. Taylor, Health South Rehabilitation Hospital of Southern Arizona, AZ [U]
Rep. NFPA Health Care Section
Mayer D. Zimmerman, U.S. Department of Health and Human Services, MD [E]

--`,,```,,,,````-`-`,,`,,`,`,,`---

Copyright National Fire Protection Association
Provided by IHS under license with NFPA
No reproduction or networking permitted without license from IHS
Not for Resale

Alternates

James H. Antell, The RJA Group, Incorporated, IL [SE]
(Alt. to M. A. Crowley)
Lori B. Dinney, Code Consultants, Incorporated, MO [SE]
(Alt. to J. R. Ambrose)
Michael R. Durst, National Fire Sprinkler Association, CO [M]
(Alt. to B. Dewar)
Joshua W. Elvove, U.S. Department of Veterans Affairs, CO [U]
(Alt. to K. S. Faulstich)
J. Richard Fruth, Hayes Large Architects, PA [SE]
(Alt. to K. W. Perry)
Thomas W. Gardner, Schirmer Engineering Corporation, GA [I]
(Alt. to D. J. O'Connor)
William E. Koffel, Koffel Associates, Incorporated, MD [U]
(Alt. to D. S. Erickson)

Nonvoting

Pichaya Chantranuwat, Fusion Consultants Company Limited/Thailand, Thailand [SE]

Ron Coté, NFPA Staff Liaison

This list represents the membership at the time the Committee was balloted on the final text of this edition. Since that time, changes in the membership may have occurred. A key to classifications is found at the back of the document.

NOTE: Membership on a committee shall not in and of itself constitute an endorsement of the Association or any document developed by the committee on which the member serves.

Committee Scope: This Committee shall have primary responsibility for documents on protection of human life and property from fire and other circumstances capable of producing similar consequences, and on the emergency movement of people in health care occupancies.

Technical Committee on Industrial, Storage, and Miscellaneous Occupancies (BLD-IND)

Wayne D. Holmes, *Chair*
HSB Professional Loss Control, CT [I]

Milosh T. Puchovsky, *Nonvoting Secretary*
National Fire Protection Association, MA

John A. Alderman, RRS Engineering, TX [SE]
Rep. American Society of Safety Engineers
Thomas L. Allison, Westinghouse Savannah River Company, SC [U]
Raymond E. Arntson, Rayden Research LLC, WI [SE]
Donald C. Birchler, FP&C Consultants Incorporated, MO [SE]
Howard M. Bucci, U.S. Department of Energy, WA [U]
Charles E. Doody, Canton Fire Department, MA [E]
John F. Farney, Jr., Sargent & Lundy Engineers, IL [SE]
Larry L. Fluer, Fluer, Incorporated, CA [M]
Rep. Compressed Gas Association
Larry N. Garrett, Delphi Corporation, IN [U]
Rep. NFPA Industrial Fire Protection Section
James E. Golinveaux, Tyco Fire & Building Products, RI [M]
Rep. American Fire Sprinkler Association
Jonathan Humble, American Iron and Steel Institute, CT [M]
Ronald Keefer, Menlo Park Fire Protection District, CA [E]
Marshall A. Klein, Marshall A. Klein & Associates, Incorporated, MD [U]
Rep. Automotive Oil Change Association
Neal W. Krantz, LVC Technologies, Incorporated, MI [IM]
Rep. Automatic Fire Alarm Association, Incorporated
Richard S. Kraus, PSC Petroleum Safety Consultants, VA [U]
Rep. American Petroleum Institute
Raymond W. Lonabaugh, National Fire Sprinkler Association, PA [M]
Patrick A. McLaughlin, McLaughlin & Associates, RI [U]
Rep. Semiconductor Industry Association
Milton L. Norsworthy, Arch Chemicals, Incorporated, TN [M]
Anthony M. Ordile, Loss Control Associates, Incorporated, PA [SE]
Rep. TC on Storage and Warehousing of Containers and Portable Tanks
Phani K. Raj, Technology & Management Systems, Incorporated, MA [SE]
Rep. TC on Liquefied Petroleum Gases
William J. Satterfield, III, Hydrogen Safety, LLC/Rode & Associates, LLC, RI [SE]
Jeffrey M. Shapiro, International Code Consultants, TX [M]
Rep. The Chlorine Institute, Incorporated
Stephen V. Skalko, Portland Cement Association, GA [M]
Cleveland B. Skinker, Bechtel Power Corporation, MD [SE]
Bruce J. Swiecicki, National Propane Gas Association, IL [IM]
David C. Tabar, The Sherwin-Williams Company, OH [U]
Samuel Vanover, Jefferson Parish Fire Department, LA [E]
Rep. TC on Hazardous Chemicals
Carl Dewayne Wren, Austin Fire Department, TX [E]

Copyright National Fire Protection Association
Provided by IHS under license with NFPA
No reproduction or networking permitted without license from IHS
Not for Resale

Alternates

Clarence D. (Dale) Eggen, U.S. Department of Energy, WA [U]
(Alt. to H. M. Bucci)
Daniel J. Gengler, National Fire Sprinkler Association, WI [M]
(Alt. to R. W. Lonabaugh)
Jack Gump, HSB Professional Loss Control, TN [I]
(Alt. to W. D. Holmes)
David M. Hammerman, Marshall A. Klein and Associates, Incorporated, MD [U]
(Alt. to M. A. Klein)
Roland J. Huggins, American Fire Sprinkler Association, TX [M]
(Alt. to J. E. Golinveaux)
Mark Kluver, Portland Cement Association, CA [M]
(Alt. to S. V. Skalko)
William E. Koffel, Koffel Associates, Incorporated, MD [U]
(Alt. to P. A. McLaughlin)
Todd D. Matteson, Westinghouse Savannah River Company, SC [U]
(Alt. to T. L. Allison)
David J. Repasky, The Sherwin-Williams Company, OH [U]
(Alt. to D. C. Tabar)
Roberto Lozano Rosales, Delphi Corporation, TX [U]
(Alt. to L. N. Garrett)
Roger A. Smith, Compressed Gas Association, VA [M]
(Alt. to L. L. Fluer)
Gary F. Trojak, The Chlorine Institute, Incorporated, VA [M]
(Alt. to J. M. Shapiro)
Robert J. Wills, American Iron and Steel Institute, AL [M]
(Alt. to J. Humble)

Nonvoting

Virginia M. Gilman, U.S. Department of Labor, DC [E]
Rep. Occupational Safety and Health Administration
(Alt. to T. P. Smith)
Terence P. Smith, U.S. Department of Labor, DC [E]
Rep. Occupational Safety and Health Administration

Milosh T. Puchovsky, NFPA Staff Liaison

This list represents the membership at the time the Committee was balloted on the final text of this edition. Since that time, changes in the membership may have occurred. A key to classifications is found at the back of the document.

NOTE: Membership on a committee shall not in and of itself constitute an endorsement of the Association or any document developed by the committee on which the member serves.

Committee Scope: This Committee shall have primary responsibility for documents on protection of human life and property from fire and other circumstances capable of producing similar consequences, and on the emergency movement of people in industrial and storage occupancies, special structures, windowless and underground buildings, and high-rise buildings.

Technical Committee on Materials (BLD-MAT)

Joseph H. Versteeg, *Chair*
Versteeg Associates, CT [E]
Rep. International Fire Marshals Association

Bonnie E. Manley, *Nonvoting Secretary*
National Fire Protection Association, MA

Stanton M. Alexander, North American Testing Company, FL [U]
Jesse J. Beitel, Hughes Associates, Incorporated, MD [SE]
Richard L. P. Custer, Arup Fire, MA [SE]
J. Daniel Dolan, Washington State University, WA [E]
Rep. Building Seismic Safety Council/Code Resource Support Committee
William E. Fitch, Omega Point Laboratories Incorporated, TX [RT]
Michael A. Gardner, Gypsum Association, DC [M]
Ralph Gerdes, Ralph Gerdes Consultants, LLC, IN [SE]
Rep. American Institute of Architects
John C. Harrington, FM Global, MA [I]
Alfred J. Hogan, Reedy Creek Improvement District, FL [E]
William E. Koffel, Koffel Associates, Incorporated, MD [M]
Rep. Glazing Industry Code Committee
Harry W. (Hank) Martin, American Iron and Steel Institute, CA [M]
Joseph J. Messersmith, Jr., Portland Cement Association, VA [M]
Dennis L. Pitts, American Forest & Paper Association, TX [M]
John C. Stevenson, John Stevenson Architect Incorporated, CA [SE]
Rep. American Institute of Architects
Jason J. Thompson, National Concrete Masonry Association, VA [M]
Rimas Veitas, Veitas & Veitas Engineers, Incorporated, MA [SE]
Rep. National Council of Structural Engineers Associations
Peter J. Willse, GE Global Asset Protection Services, CT [I]

Alternates

Richard J. Davis, FM Global, MA [I]
(Alt. to J. C. Harrington)
Karl D. Houser, EBL Engineers, LLC, MD [IM]
(Voting Alt. to AWCI Rep.)

Copyright National Fire Protection Association
Provided by IHS under license with NFPA
No reproduction or networking permitted without license from IHS
Not for Resale

Mark Kluver, Portland Cement Association, CA [M]
(Alt. to J. J. Messersmith)
Arthur J. Parker, Hughes Associates, Incorporated, MD [SE]
(Alt. to J. J. Beitel)
Norman J. Scheel, Norman Scheel Structural Engineer, CA [SE]
(Alt. to R. Veitas)
David P. Tyree, American Forest & Paper Association, CO [M]
(Alt. to D. L. Pitts)
Robert A. Wessel, Gypsum Association, DC [M]
(Alt. to M. A. Gardner)
Robert J. Wills, American Iron and Steel Institute, AL [M]
(Alt. to H. W. Martin)

Bonnie E. Manley, NFPA Staff Liaison

This list represents the membership at the time the Committee was balloted on the final text of this edition. Since that time, changes in the membership may have occurred. A key to classifications is found at the back of the document.

NOTE: Membership on a committee shall not in and of itself constitute an endorsement of the Association or any document developed by the committee on which the member serves.

Committee Scope: This Committee shall have primary responsibility for documents on the application of various building materials that are used in the construction of buildings, structures, and related facilities.

Technical Committee on Means of Egress (BLD-MEA)

David A. de Vries, *Chair*
Firetech Engineering Incorporated, IL [SE]

Ron Coté, *Nonvoting Secretary*
National Fire Protection Association, MA

Lawrence Brown, National Association of Home Builders, DC [U]
John L. Bryan, Frederick, MD [SE]
Kenneth E. Bush, Maryland State Fire Marshals Office, MD [E]
Rep. International Fire Marshals Association
Steven Di Pilla, ACE USA/ESIS Risk Control Services, NJ [I]
Rep. American Society of Safety Engineers
Joshua W. Elvove, U.S. Department of Veterans Affairs, CO [U]
Philip C. Favro, Philip C. Favro & Associates, CA [SE]
Edward L. Fixen, Schirmer Engineering Corporation, CA [I]
David Frable, U.S. General Services Administration, IL [U]
Rita C. Guest, Carson Guest, Incorporated, GA [U]
Rep. American Society of Interior Designers
Billy G. Helton, Lithonia Emergency Systems, GA [M]
Rep. National Electrical Manufacturers Association
William E. Koffel, Koffel Associates, Incorporated, MD [SE]
Erica D. Kuligowski, U.S. National Institute of Standards and Technology, MD [RT]
Lawrence J. McGinty, U.S. Central Intelligence Agency, DC [U]
Gary L. Nuschler, Otis Elevator Company, CT [M]
Rep. National Elevator Industry Incorporated
Jake Pauls, Jake Pauls Consulting Services in Building Use & Safety, MD [C]
Rep. American Public Health Association
Robert R. Perry, Robert Perry Associates Incorporated, IL [M]
Rep. Door & Hardware Institute
Eric R. Rosenbaum, Hughes Associates, Incorporated, MD [SE]
Michael S. Shulman, Underwriters Laboratories Incorporated, CA [RT]
Leslie Strull, The RJA Group, Incorporated, IL [SE]
Andrew L. Stuffler, City of Ventura Fire Department, CA [E]
Michael Tierney, Builders Hardware Manufacturers Association, CT [M]
Michael D. Tomy, Heery International Incorporated, GA [SE]
Rep. American Institute of Architects
Joseph H. Versteeg, Versteeg Associates, CT [E]
Rep. Fairfield CT Fire Marshal's Office

Alternates

Warren D. Bonisch, Schirmer Engineering Corporation, TX [I]
(Alt. to E. L. Fixen)
Michael A. Crowley, The RJA Group, Incorporated, TX [SE]
(Alt. to L. Strull)
Joseph M. DeRosier, U.S. Department of Veterans Affairs, MI [U]
(Alt. to J. W. Elvove)
Edward A. Donoghue, Edward A. Donoghue Associates, Incorporated, NY [M]
(Alt. to G. L. Nuschler)
Barbara Ebstein, Vinick Associates, Incorporated, CT [U]
(Alt. to R. C. Guest)
Steven D. Holmes, Underwriters Laboratories Incorporated, CA [RT]
(Alt. to M. S. Shulman)
James K. Lathrop, Koffel Associates, Incorporated, CT [SE]
(Alt. to W. E. Koffel)
R. T. Leicht, State of Delaware, DE [E]
(Alt. to K. E. Bush)
James A. Milke, University of Maryland, MD [SE]
(Alt. to J. L. Bryan)
Brian T. Rhodes, Hughes Associates, Incorporated, MD [SE]
(Alt. to E. R. Rosenbaum)
Roy W. Schwarzenberg, U.S. Central Intelligence Agency, DC [U]
(Alt. to L. J. McGinty)
Gregory J. Steinman, Thomas & Betts Corporation, TN [M]
(Alt. to B. G. Helton)

Copyright National Fire Protection Association
Provided by IHS under license with NFPA
No reproduction or networking permitted without license from IHS
Not for Resale

Nonvoting

Pichaya Chantranuwat, Fusion Consultants Company Limited/Thailand, Thailand [SE]
Matthew I. Chibbaro, U.S. Department of Labor, DC [E]
Rep. Occupational Safety and Health Administration
Virginia M. Gilman, U.S. Department of Labor, DC [E]
Rep. Occupational Safety and Health Administration
(Alt. to M. I. Chibbaro)

Ron Coté, NFPA Staff Liaison

This list represents the membership at the time the Committee was balloted on the final text of this edition. Since that time, changes in the membership may have occurred. A key to classifications is found at the back of the document.

NOTE: Membership on a committee shall not in and of itself constitute an endorsement of the Association or any document developed by the committee on which the member serves.

Committee Scope: This Committee shall have primary responsibility for documents on the general requirements for safe egress for protection of human life from fire and other circumstances capable of producing similar consequences, and on the nonemergency and emergency movement of people.

Technical Committee on Mercantile and Business Occupancies (BLD-MER)

Ed Schultz, *Chair*
Code Consultants, Incorporated, MO [SE]

Milosh T. Puchovsky, *Nonvoting Secretary*
National Fire Protection Association, MA

David M. Banwarth, David M. Banwarth Associates, LLC, MD [SE]
E. Joseph Bocci, U.S. Department of the Treasury, DC [U]
Kenneth E. Bush, Maryland State Fire Marshals Office, MD [E]
Rep. International Fire Marshals Association
David A. Dodge, Safety and Forensic Consulting, ME [SE]
Rep. American Society of Safety Engineers
Sam W. Francis, American Forest & Paper Association, PA [M]
Douglas R. Freels, Performance Design Technologies, TN [SE]
Daniel J. Gauvin, Tyco/SimplexGrinnell, MA [M]
Rep. National Electrical Manufacturers Association
William Hiotaky, The Taubman Company, MI [U]
Wayne D. Holmes, HSB Professional Loss Control, CT [I]
Jonathan Humble, American Iron and Steel Institute, CT [M]
Michael J. Laderoute, MJL Associates, Incorporated, VA [M]
Rep. Fire Equipment Manufacturers' Association
Brian L. Marburger, St. Paul Travelers, IL [I]
Jeff Martin, Elite Fire Protection, Canada [IM]
Rep. National Association of Fire Equipment Distributors
Richard V. Moon, Insurance Services Office, Incorporated, NJ [I]
Lawrence G. Perry, Building Owners & Managers Association International, MD [U]
Steven E. Randall, National Fire Sprinkler Association, FL [M]
Sheldon S. Rucinski, Schirmer Engineering Corporation, IL [I]
David C. Tabar, The Sherwin-Williams Company, OH [U]
Rick Thornberry, The Code Consortium, Incorporated, CA [SE]
William J. Tomes, TVA Fire and Life Safety, Incorporated, GA [U]
Rep. The Home Depot

Alternates

Tracey D. Bellamy, TVA Fire and Life Safety, Incorporated, GA [U]
(Alt. to W. J. Tomes)
Darryl Thomas Brown, Performance Design Technologies, TN [SE]
(Alt. to D. R. Freels)
Jack Gump, HSB Professional Loss Control, TN [I]
(Alt. to W. D. Holmes)
Raymond W. Lonabaugh, National Fire Sprinkler Association, PA [M]
(Alt. to S. E. Randall)
Patrick A. McLaughlin, McLaughlin & Associates, RI [U]
(Alt. to D. C. Tabar)
Richard R. Osman, Schirmer Engineering Corporation, IL [I]
(Alt. to S. S. Rucinski)
Dennis L. Pitts, American Forest & Paper Association, TX [M]
(Alt. to S. W. Francis)
Terry Schultz, Code Consultants, Incorporated, MO [SE]
(Alt. to E. Schultz)
Robert J. Wills, American Iron and Steel Institute, AL [M]
(Alt. to J. Humble)

Milosh T. Puchovsky, NFPA Staff Liaison

This list represents the membership at the time the Committee was balloted on the final text of this edition. Since that time, changes in the membership may have occurred. A key to classifications is found at the back of the document.

NOTE: Membership on a committee shall not in and of itself constitute an endorsement of the Association or any document developed by the committee on which the member serves.

Committee Scope: This Committee shall have primary responsibility for documents on protection of human life and property from fire and other circumstances capable of producing similar consequences, and for the emergency movement of people in mercantile and business occupancies.

Copyright National Fire Protection Association
Provided by IHS under license with NFPA
No reproduction or networking permitted without license from IHS
Not for Resale

Technical Committee on Residential Occupancies (BLD-RES)

James K. Lathrop, *Chair*
Koffel Associates, Incorporated, CT [SE]

Gregory E. Harrington, *Nonvoting Secretary*
National Fire Protection Association, MA

James R. Bell, Marriott International, Incorporated, DC [U]
Rep. American Hotel & Lodging Association
Warren D. Bonisch, Schirmer Engineering Corporation, TX [I]
H. Wayne Boyd, U.S. Safety & Engineering Corporation, CA [M]
Harry L. Bradley, Maryland State Fire Marshals Office, MD [E]
Rep. International Fire Marshals Association
Byron L. Briese, The RJA Group, Incorporated, VA [U]
Rep. NFPA Lodging Industry Section
Lawrence Brown, National Association of Home Builders, DC [U]
Phillip A. Brown, American Fire Sprinkler Association, TX [IM]
James J. Convery, Arup Fire, NJ [SE]
Sam W. Francis, American Forest & Paper Association, PA [M]
Ralph Gerdes, Ralph Gerdes Consultants, LLC, IN [SE]
Wendy B. Gifford, Invensys Climate Controls America, IL [M]
Rep. National Electrical Manufacturers Association
Robert Howe, Vermont Department of Labor & Industry, VT [E]
Rep. National Association of State Fire Marshals
Kenneth E. Isman, National Fire Sprinkler Association, NY [M]
Marshall A. Klein, Marshall A. Klein & Associates, Incorporated, MD [SE]
Joseph J. Messersmith, Jr., Portland Cement Association, VA [M]
Ronald G. Nickson, National Multi Housing Council, DC [U]
Erin A. M. Oneisom, U.S. Air Force, AE [U]
Henry Paszczuk, City of New Britain Fire Department, CT [E]
Jake Pauls, Jake Pauls Consulting Services in Building Use & Safety, MD [C]
Rep. American Public Health Association
Peter Puhlick, University of Connecticut, CT [U]
Alan Robinson, Tuan and Robinson, Structural Engineers, Incorporated, CA [E]
Rep. Building Seismic Safety Council/Code Resource Support Committee
John A. Sharry, Beakmann Properties, CA [U]
T. Hugh Talley, Hugh Talley Company, TN [M]
Rep. American Furniture Manufacturers Association
Joseph H. Versteeg, Versteeg Associates, CT [SE]

Alternates

Carl F. Baldassarra, Schirmer Engineering Corporation, IL [I]
(Alt. to W. D. Bonisch)
David Cook, Ralph Gerdes Consultants, LLC, IN [SE]
(Alt. to R. Gerdes)
Thomas G. Daly, Hilton Hotels Corporation, CA [U]
(Alt. to J. R. Bell)
David M. Hammerman, Marshall A. Klein & Associates, Incorporated, MD [SE]
(Alt. to M. A. Klein)
Stanley C. Harbuck, School of Building Inspection, UT [C]
(Alt. to J. Pauls)
Mark Kluver, Portland Cement Association, CA [M]
(Alt. to J. J. Messersmith)
Michael F. Meehan, Virginia Sprinkler Company, Incorporated, VA [IM]
(Alt. to P. A. Brown)
Donald J. Pamplin, National Fire Sprinkler Association, WA [M]
(Alt. to K. E. Isman)
Dennis L. Pitts, American Forest & Paper Association, TX [M]
(Alt. to S. W. Francis)
Jeffrey L. Shearman, Zurich Services Corporation, PA [U]
(Alt. to B. L. Briese)
Fred K. Walker, U.S. Air Force, FL [U]
(Alt. to E. A. M. Oneisom)

Gregory E. Harrington, NFPA Staff Liaison

This list represents the membership at the time the Committee was balloted on the final text of this edition. Since that time, changes in the membership may have occurred. A key to classifications is found at the back of the document.

NOTE: Membership on a committee shall not in and of itself constitute an endorsement of the Association or any document developed by the committee on which the member serves.

Committee Scope: This Committee shall have primary responsibility for documents on protection of human life and property from fire and other circumstances capable of producing similar consequences, and on the emergency movement of people in hotels, dormitories, apartments, lodging and rooming houses, and one- and two-family dwellings.

Copyright National Fire Protection Association
Provided by IHS under license with NFPA
No reproduction or networking permitted without license from IHS
Not for Resale

Technical Committee on Structures and Construction (BLD-STR)

Peter J. Willse, *Chair*
GE Global Asset Protection Services, CT [I]
Rep. GE Global Asset Protection Services

Bonnie Manley, *Nonvoting Secretary*
National Fire Protection Association, MA

David S. Collins, The Preview Group, Incorporated, OH [SE]
Rep. American Institute of Architects
Richard J. Davis, FM Global, MA [I]
Carvin DiGiovanni, National Spa & Pool Institute, VA [M]
Ralph Dorio, Insurance Services Office, NJ [I]
Victor L. Dubrowski, Code Consultants, Incorporated, MO [SE]
Jeffrey Feid, State Farm Insurance Company, IL [I]
Satyendra K. Ghosh, S. K. Ghosh Associates Incorporated, IL [SE]
John D. Gillengerten, State of California, CA [E]
Raymond A. Grill, The RJA Group, Incorporated, VA [SE]
Joseph T. Holland, III, Hoover Treated Wood Products, Incorporated, FL [M]
Martin W. Johnson, ABS Consulting, CA [SE]
Rep. National Council of Structural Engineers Associations
Christopher P. Jones, Christopher P. Jones & Associates, NC [E]
Rep. FEMA/Federal Insurance & Mitigation Administration
James R. Kirby, National Roofing Contractors Association, IL [IM]
Harry W. (Hank) Martin, American Iron and Steel Institute, CA [M]
Joe McElvaney, City of Phoenix, AZ [E]
Joseph J. Messersmith, Jr., Portland Cement Association, VA [M]
Scott G. Nacheman, LZA Technology/Thornton-Tomasetti Engineers, IL [SE]
Eugene M. Novak, Jr., Commonwealth of Massachusetts, MA [E]
Sarah A. Rice, Schirmer Engineering Corporation, OH [I]
James A. Rossberg, Structural Engineering Institute of the ASCE, VA [SE]
Jason V. Smart, Institute for Business & Home Safety, FL [I]
Rebai Tamerhoulet, State of Oregon, OR [E]
Jason J. Thompson, National Concrete Masonry Association, VA [M]
David P. Tyree, American Forest & Paper Association, CO [M]
Michael T. Valley, Magnusson Klemencic Associates, WA [E]
Rep. Building Seismic Safety Council/Code Resource Support Committee
Carl Dewayne Wren, Austin Fire Department, TX [E]
Rep. International Fire Marshals Association

Alternates

Susan M. Dowty, S. K. Ghosh Associates Incorporated, CA [SE]
(Alt. to S. K. Ghosh)
Daniel F. Gemeny, The RJA Group, Incorporated, CA [SE]
(Alt. to R. A. Grill)
John C. Harrington, FM Global, MA [I]
(Alt. to R. J. Davis)
Gerald H. Jones, Kansas City, MO [E]
(Alt. to M. T. Valley)
Mark Kluver, Portland Cement Association, CA [M]
(Alt. to J. J. Messersmith)
John V. Loscheider, Loscheider Engineering Company, WA [SE]
(Alt. to M. W. Johnson)
Michael L. Perrino, Code Consultants, Incorporated, MO [SE]
(Alt. to V. L. Dubrowski)
James S. Sheehan, Jr., Town of Framingham, MA [E]
(Alt. to E. M. Novak)
Jeffrey B. Stone, American Forest & Paper Association, FL [M]
(Alt. to D. P. Tyree)
Ronald R. Walker, Charlevoix, MI [M]
(Alt. to J. T. Holland)
Robert J. Wills, American Iron and Steel Institute, AL [M]
(Alt. to H. W. Martin)

Bonnie E. Manley, NFPA Staff Liaison

This list represents the membership at the time the Committee was balloted on the final text of this edition. Since that time, changes in the membership may have occurred. A key to classifications is found at the back of the document.

NOTE: Membership on a committee shall not in and of itself constitute an endorsement of the Association or any document developed by the committee on which the member serves.

Committee Scope: This Committee shall have primary responsibility for documents on the selection and design of building construction types, structural design systems and assemblies, construction techniques and methodologies, and for the protection of human life and property from fire and environmental loads.

Copyright National Fire Protection Association
Provided by IHS under license with NFPA
No reproduction or networking permitted without license from IHS
Not for Resale

Contents

Chapter 1 Administration **5000**– 25
1.1 Scope **5000**– 25
1.2 Purpose **5000**– 25
1.3 Application **5000**– 25
1.4 Retroactivity. (Reserved) **5000**– 25
1.5 Equivalency **5000**– 25
1.6 Units **5000**– 25
1.7 Enforcement **5000**– 25

Chapter 2 Referenced Publications **5000**– 33
2.1 General **5000**– 33
2.2 NFPA Publications **5000**– 33
2.3 Other Publications **5000**– 35
2.4 References for Extracts in Mandatory Sections **5000**– 43

Chapter 3 Definitions **5000**– 43
3.1 General **5000**– 43
3.2 NFPA Official Definitions **5000**– 43
3.3 General Definitions **5000**– 44

Chapter 4 General **5000**– 69
4.1 Goals and Objectives **5000**– 69
4.2 Assumption — Single Fire Source **5000**– 72
4.3 Building Design and Life Safety Compliance Options **5000**– 72
4.4 Fundamental Fire and Life Safety Requirements **5000**– 72
4.5 General Requirements **5000**– 73
4.6 Roof Access **5000**– 73

Chapter 5 Performance-Based Option **5000**– 74
5.1 General Requirements **5000**– 74
5.2 Performance Criteria **5000**– 74
5.3 Retained Prescriptive Requirements ... **5000**– 75
5.4 Performance-Based Design Characteristics and Assumptions **5000**– 76
5.5 Design Scenarios **5000**– 77
5.6 Evaluation of Proposed Designs **5000**– 79
5.7 Safety Factors **5000**– 79
5.8 Documentation Requirements **5000**– 79

Chapter 6 Classification of Occupancy, Classification of Hazard of Contents, and Special Operations ... **5000**– 79
6.1 Classification of Occupancy **5000**– 79
6.2 Multiple Occupancies **5000**– 81
6.3 Hazard of Contents **5000**– 81
6.4 Special Operations **5000**– 84

Chapter 7 Construction Types and Height and Area Requirements **5000**– 87
7.1 General **5000**– 87
7.2 Construction Types **5000**– 88
7.3 Exterior Walls **5000**– 92
7.4 Height and Area Requirements **5000**– 95
7.5 Height Increases Permitted **5000**– 99
7.6 Area Increases Permitted **5000**–100

Chapter 8 Fire-Resistive Materials and Construction **5000**–102
8.1 General **5000**–102
8.2 Fire Resistance–Rated Construction ... **5000**–102
8.3 High Challenge Fire Walls and Fire Walls **5000**–103
8.4 Fire Barrier Walls **5000**–110
8.5 Exterior Walls — General **5000**–110
8.6 Horizontal Assemblies **5000**–110
8.7 Opening Protectives **5000**–111
8.8 Penetrations **5000**–112
8.9 Joints **5000**–114
8.10 Smoke Partitions **5000**–115
8.11 Smoke Barriers **5000**–116
8.12 Vertical Openings **5000**–117
8.13 Mezzanine **5000**–119
8.14 Concealed Spaces **5000**–119
8.15 Special Hazard Protection **5000**–120
8.16 Insulating Materials **5000**–120
8.17 Rubbish Chutes and Laundry Chutes ... **5000**–121

Chapter 9 Reserved **5000**–121

Chapter 10 Interior Finish **5000**–121
10.1 General **5000**–121
10.2 Use of Interior Finishes **5000**–121
10.3 Interior Wall or Ceiling Finish Testing and Classification **5000**–122
10.4 Specific Materials **5000**–122
10.5 Trim and Incidental Finish **5000**–123
10.6 Interior Floor Finish Testing and Classification **5000**–123
10.7 Automatic Sprinklers **5000**–123

Chapter 11 Means of Egress **5000**–123
11.1 General **5000**–123
11.2 Means of Egress Components **5000**–125
11.3 Capacity of Means of Egress **5000**–140
11.4 Number of Means of Egress **5000**–143
11.5 Arrangement of Means of Egress **5000**–143
11.6 Measurement of Travel Distance to Exits **5000**–144
11.7 Discharge from Exits **5000**–145
11.8 Illumination of Means of Egress. **5000**–145
11.9 Emergency Lighting **5000**–146
11.10 Marking of Means of Egress **5000**–146
11.11 Special Provisions for Occupancies with High Hazard Contents **5000**–148

--`,,```,,,,````-`-`,,`,,`,`,,`---

Copyright National Fire Protection Association
Provided by IHS under license with NFPA
No reproduction or networking permitted without license from IHS
Not for Resale

11.12 Mechanical Equipment Rooms, Boiler Rooms, and Furnace Rooms 5000–148

Chapter 12 Accessibility 5000–148
12.1 Application 5000–148
12.2 Existing Buildings and Facilities 5000–148
12.3 General Exceptions 5000–149
12.4 Protruding Objects 5000–150
12.5 Operable Parts 5000–150
12.6 Accessible Routes 5000–150
12.7 Accessible Means of Egress 5000–154
12.8 Parking Spaces 5000–154
12.9 Passenger Loading Zones and Bus Stops 5000–155
12.10 Stairways 5000–155
12.11 Drinking Fountains 5000–155
12.12 Kitchens and Kitchenettes 5000–155
12.13 Toilet Facilities and Bathing Facilities ... 5000–155
12.14 Washing Machines and Clothes Dryers 5000–156
12.15 Fire Alarm Systems 5000–156
12.16 Signs 5000–156
12.17 Telephones 5000–158
12.18 Transportation Facilities 5000–158
12.19 Assistive Listening Systems 5000–159
12.20 Automatic Teller Machines and Fare Machines 5000–159
12.21 Assembly Areas 5000–159
12.22 Dressing, Fitting, and Locker Rooms 5000–160
12.23 Health Care Occupancies and Residential Board and Care Occupancies 5000–160
12.24 Hotel and Motel and Lodging and Rooming House Guest Rooms 5000–161
12.25 Storage 5000–162
12.26 Dining Surfaces and Work Surfaces 5000–162
12.27 Sales and Service 5000–162
12.28 Depositories, Vending Machines, Change Machines, Mail Boxes, and Fuel Dispensers 5000–162
12.29 Windows 5000–163
12.30 Two-Way Communication Systems 5000–163
12.31 Judicial Facilities 5000–163
12.32 Detention Facilities and Correctional Facilities 5000–163
12.33 Residential Facilities 5000–164
12.34 Amusement Rides 5000–166
12.35 Recreational Boating Facilities 5000–166
12.36 Exercise Machines and Equipment 5000–166
12.37 Fishing Piers and Platforms 5000–166
12.38 Golf Facilities 5000–166
12.39 Miniature Golf Facilities 5000–167
12.40 Play Areas 5000–167
12.41 Saunas and Steam Rooms 5000–167
12.42 Swimming Pools, Wading Pools, and Spas 5000–168
12.43 Shooting Facilities with Firing Positions 5000–168
12.44 Technical Requirements 5000–168
12.45 Additional Technical Requirements ... 5000–168

Chapter 13 Encroachments into the Public Right-of-Way 5000–182
13.1 General 5000–182
13.2 Projection into Alleys 5000–182
13.3 Space Below Sidewalk 5000–182
13.4 Balconies and Appendages 5000–182
13.5 Doors 5000–182
13.6 Roof Drainage 5000–182
13.7 Air-Right Structures 5000–182
13.8 Skywalk Bridges 5000–182

Chapter 14 Safeguards During Construction 5000–182
14.1 Purpose 5000–182
14.2 Application 5000–182
14.3 Protection of Utilities 5000–182
14.4 Temporary Light and Power 5000–182
14.5 Use of Explosives 5000–182

Chapter 15 Building Rehabilitation 5000–182
15.1 Administration 5000–182
15.2 Definitions and Chapter Organization 5000–184
15.3 Repair 5000–185
15.4 Renovation 5000–185
15.5 Modification 5000–187
15.6 Reconstruction 5000–190
15.7 Change of Use and Change of Occupancy Classification 5000–195
15.8 Addition 5000–200
15.9 Damaged or Unsafe Buildings 5000–201
15.10 Historic Buildings and Structures 5000–201

Chapter 16 Assembly Occupancies 5000–204
16.1 General Requirements 5000–204
16.2 Means of Egress Requirements 5000–204
16.3 Protection 5000–211
16.4 Special Provisions 5000–213
16.5 Building Services 5000–220
16.6 Reserved 5000–220

Chapter 17 Educational Occupancies 5000–220
17.1 General Requirements 5000–220
17.2 Means of Egress Requirements 5000–221
17.3 Protection 5000–222
17.4 Special Provisions 5000–224
17.5 Building Services 5000–224
17.6 Reserved 5000–225

Copyright National Fire Protection Association
Provided by IHS under license with NFPA
No reproduction or networking permitted without license from IHS
Not for Resale

Chapter 18 Day-Care Occupancies **5000**–225
18.1 General Requirements **5000**–225
18.2 Means of Egress Requirements **5000**–226
18.3 Protection **5000**–227
18.4 Special Provisions **5000**–228
18.5 Building Services **5000**–228
18.6 Day-Care Homes **5000**–229

Chapter 19 Health Care Occupancies **5000**–230
19.1 General Requirements **5000**–230
19.2 Means of Egress Requirements **5000**–232
19.3 Protection **5000**–236
19.4 Special Provisions **5000**–239
19.5 Building Services **5000**–240

Chapter 20 Ambulatory Health Care Occupancies **5000**–241
20.1 General Requirements **5000**–241
20.2 Means of Egress Requirements **5000**–242
20.3 Protection **5000**–243
20.4 Special Provisions **5000**–244
20.5 Building Services **5000**–244

Chapter 21 Detention and Correctional Occupancies **5000**–245
21.1 General Requirements **5000**–245
21.2 Means of Egress Requirements **5000**–246
21.3 Protection **5000**–248
21.4 Special Provisions **5000**–250
21.5 Building Services **5000**–254

Chapter 22 One- and Two-Family Dwellings **5000**–254
22.1 General Requirements **5000**–254
22.2 Means of Escape Requirements **5000**–255
22.3 Protection **5000**–256
22.4 Separation Between Townhouses **5000**–257
22.5 Building Services **5000**–257

Chapter 23 Lodging or Rooming House Occupancies **5000**–257
23.1 General Requirements **5000**–257
23.2 Means of Escape Requirements **5000**–258
23.3 Protection **5000**–258
23.4 Reserved **5000**–260
23.5 Building Services **5000**–260

Chapter 24 Hotels and Dormitory Occupancies **5000**–260
24.1 General Requirements **5000**–260
24.2 Means of Egress Requirements **5000**–261
24.3 Protection **5000**–262
24.4 Special Provisions **5000**–264
24.5 Building Services **5000**–264

Chapter 25 Apartment Buildings **5000**–264
25.1 General Requirements **5000**–264
25.2 Means of Egress Requirements **5000**–265
25.3 Protection **5000**–267
25.4 Special Provisions **5000**–269
25.5 Building Services **5000**–269

Chapter 26 Residential Board and Care Occupancies **5000**–269
26.1 General Requirements **5000**–269
26.2 Small Facilities **5000**–269
26.3 Large Facilities **5000**–272

Chapter 27 Mercantile Occupancies **5000**–275
27.1 General Requirements **5000**–275
27.2 Means of Egress Requirements **5000**–276
27.3 Protection **5000**–278
27.4 Special Provisions **5000**–279
27.5 Building Services **5000**–283
27.6 Reserved **5000**–283

Chapter 28 Business Occupancies **5000**–283
28.1 General Requirements **5000**–283
28.2 Means of Egress Requirements **5000**–284
28.3 Protection **5000**–285
28.4 Special Provisions **5000**–286
28.5 Building Services **5000**–286

Chapter 29 Industrial Occupancies **5000**–287
29.1 General Requirements **5000**–287
29.2 Means of Egress Requirements **5000**–287
29.3 Protection **5000**–289
29.4 Special Provisions **5000**–290
29.5 Building Services **5000**–290
29.6 Special Provisions for Aircraft-Servicing Hangars **5000**–291

Chapter 30 Storage Occupancies **5000**–291
30.1 General Requirements **5000**–291
30.2 Means of Egress Requirements **5000**–291
30.3 Protection **5000**–293
30.4 Special Provisions **5000**–294
30.5 Building Services **5000**–294
30.6 Special Provisions for Aircraft Storage Hangars **5000**–294
30.7 Special Provisions for Grain or Other Bulk Storage Elevators **5000**–294
30.8 Special Provisions for Parking Structures **5000**–295

Chapter 31 Occupancies in Special Structures ... **5000**–297
31.1 General **5000**–297
31.2 Underground Structures **5000**–297
31.3 Limited Access Structures **5000**–298
31.4 Vehicles and Vessels (Mobile Units) **5000**–298
31.5 Open Structures (Outdoor Processing Facilities) **5000**–298
31.6 Towers **5000**–299

Copyright National Fire Protection Association
Provided by IHS under license with NFPA
No reproduction or networking permitted without license from IHS
Not for Resale

31.7 Water-Surrounded Structures 5000–299
31.8 Piers 5000–300
31.9 Helistops 5000–300

Chapter 32 Special Construction 5000–300
32.1 General 5000–300
32.2 Membrane Structures 5000–301
32.3 Tents 5000–302
32.4 Awnings and Canopies 5000–303
32.5 Marquees 5000–304
32.6 Outdoor Signs 5000–304
32.7 Grandstands and Bleachers 5000–304
32.8 Swimming Pools and Spas 5000–306
32.9 Cooling Towers 5000–306
32.10 Temporary Structures 5000–306
32.11 Masonry and Concrete, Chimneys, and Fireplaces 5000–307
32.12 Masonry Heaters 5000–307
32.13 Roof Structures 5000–307
32.14 Towers and Spires 5000–307
32.15 Rooftop Heliports 5000–307

Chapter 33 High-Rise Buildings 5000–307
33.1 General Requirements 5000–307
33.2 Protection 5000–308

Chapter 34 High Hazard Contents 5000–308
34.1 General Requirements 5000–308
34.2 Requirements for All Occupancies Containing High Hazard Contents 5000–321
34.3 Requirements for Occupancies Exceeding the Maximum Allowable Quantities per Control Area for High Hazard Contents 5000–322

Chapter 35 Structural Design 5000–336
35.1 General 5000–336
35.2 Special Definitions 5000–337
35.3 Occupancy Category 5000–339
35.4 Construction Documents 5000–339
35.5 Dead Loads 5000–341
35.6 Live Loads 5000–341
35.7 Roof Loads 5000–342
35.8 Snow Loads 5000–343
35.9 Wind Loads 5000–343
35.10 Earthquake Loads 5000–344
35.11 Lateral Soil Loads 5000–344
35.12 Flood Loads 5000–344
35.13 Ice Loads — Atmospheric Icing Loads 5000–345
35.14 Other Minimum Loads 5000–345
35.15 Load Combinations 5000–345
35.16 Building Rehabilitation 5000–345

Chapter 36 Soils, Foundations, and Retaining Walls 5000–345
36.1 Scope 5000–345
36.2 Excavations 5000–345
36.3 Investigation and Bearing Capacity of Soil 5000–346
36.4 Soil-Bearing Footings 5000–347
36.5 Pile Foundations 5000–348
36.6 Foundation Walls 5000–350
36.7 Wood Foundation Systems. 5000–354
36.8 Waterproofing and Dampproofing 5000–354
36.9 Retaining Walls 5000–354

Chapter 37 Exterior Wall Construction 5000–354
37.1 General 5000–354
37.2 Projections 5000–355
37.3 Weather Resistance. 5000–355
37.4 Metal Composite Materials 5000–356
37.5 Exterior Insulation and Finish Systems (EIFS) 5000–357

Chapter 38 Roof Assemblies and Roof Structures 5000–357
38.1 Scope 5000–357
38.2 Exterior Fire Exposure 5000–357
38.3 Interior Fire Exposure 5000–358
38.4 Wind Resistance 5000–358
38.5 Hail Resistance 5000–358
38.6 Roof Drainage. 5000–359
38.7 Roof Flashing Requirements 5000–360
38.8 Ventilation of Attic Space 5000–360
38.9 Roof Materials and Assemblies 5000–360
38.10 Re-Roofing 5000–367
38.11 Light-Transmitting Plastic Roof Panels, Sloped Glazing, and Skylights 5000–367

Chapter 39 Flood-Resistant Design and Construction 5000–368
39.1 General 5000–368
39.2 Special Definitions 5000–368
39.3 Design Flood 5000–369
39.4 Flood Hazard Area 5000–370
39.5 Performance During the Design Flood 5000–370
39.6 Design and Construction Requirements 5000–370
39.7 Lowest Floor Elevation 5000–370
39.8 Foundations 5000–370
39.9 Materials 5000–370
39.10 Systems 5000–370
39.11 Enclosures Below the Design Flood Elevation 5000–370
39.12 Documentation 5000–371
39.13 Existing Structures 5000–372
39.14 Manufactured Housing 5000–372

--`,,```,,,,````-`-`,,`,,`,`,,`---

Copyright National Fire Protection Association
Provided by IHS under license with NFPA
No reproduction or networking permitted without license from IHS

Not for Resale

39.15 Temporary Structures 5000–372

Chapter 40 Quality Assurance During Construction 5000–372
40.1 General 5000–372
40.2 Extent of Quality Assurance 5000–373
40.3 Quality Assurance for Structural and Geotechnical Components and Assemblies 5000–374
40.4 Quality Assurance for Wall Finish Systems 5000–380
40.5 Quality Assurance for Sprayed Fire-Resistive Materials 5000–380
40.6 Quality Assurance for Smoke Control Systems 5000–381
40.7 Quality Assurance for Stairs and Railings 5000–381
40.8 Quality Assurance for Nonstructural Components and Systems 5000–381
40.9 Quality Assurance for Penetrations and Joints 5000–381

Chapter 41 Concrete 5000–381
41.1 Scope 5000–381
41.2 General 5000–381
41.3 Construction Documents 5000–382
41.4 Quality Assurance 5000–382
41.5 Seismic Requirements 5000–382
41.6 Slabs-on-Ground 5000–382
41.7 Shotcrete 5000–382
41.8 Reinforced Gypsum Concrete 5000–382

Chapter 42 Aluminum 5000–382
42.1 General 5000–382

Chapter 43 Masonry 5000–382
43.1 Scope 5000–382
43.2 General 5000–382
43.3 Design 5000–382
43.4 Construction Documents 5000–383
43.5 Quality Assurance 5000–383
43.6 Masonry Construction Materials 5000–383
43.7 Masonry Construction 5000–383
43.8 Seismic Requirements 5000–383
43.9 Masonry and Concrete Fireplaces and Chimneys 5000–383

Chapter 44 Steel 5000–383
44.1 General 5000–383
44.2 Structural Steel Construction 5000–383
44.3 Steel Joists 5000–384
44.4 Steel Cable Structures 5000–384
44.5 Steel Storage Racks 5000–384
44.6 Cold-Formed Steel 5000–384
44.7 Cold-Formed Steel Framing 5000–384

Chapter 45 Wood 5000–384
45.1 Scope 5000–384
45.2 Special Definitions 5000–384
45.3 General 5000–385
45.4 Design Requirements 5000–385
45.5 Criteria 5000–385
45.6 General Construction Requirements 5000–388

Chapter 46 Glass and Glazing 5000–392
46.1 General 5000–392
46.2 Special Definitions 5000–392
46.3 Labeling 5000–393
46.4 Louvered Windows or Jalousies 5000–393
46.5 Human Impact Loads 5000–393
46.6 Glass in Handrails and Guards 5000–394
46.7 Glazing in Athletic Facilities 5000–395
46.8 Sloped Glazing and Skylights 5000–395
46.9 Glass Supports 5000–396
46.10 Wind, Snow, and Dead Loads on Glass 5000–396
46.11 Fire Protection Glazing 5000–398

Chapter 47 Gypsum Board, Lath, and Plaster 5000–398
47.1 General Requirements 5000–398
47.2 Gypsum Board and Gypsum Veneer Plaster 5000–398
47.3 Gypsum Lath and Gypsum Plaster 5000–400
47.4 Portland Cement Plaster 5000–400

Chapter 48 Plastics 5000–402
48.1 Scope 5000–402
48.2 Special Definitions 5000–402
48.3 General Criteria — Foam Plastic Insulation 5000–402
48.4 Specific Application Requirements — Foam Plastic Insulation 5000–404
48.5 Specific Requirements — Interior Finish and Trim 5000–405
48.6 Specific Requirements — Plastic Veneers 5000–405
48.7 Specific Requirements — Light-Transmitting Plastics 5000–405
48.8 Specific Requirements — Plastic Interior Signs 5000–409
48.9 Specific Requirements — Light-Transmitting Plastics Used in Greenhouses 5000–409

Chapter 49 Interior Environment 5000–409
49.1 General 5000–409
49.2 Ventilation 5000–409
49.3 Lighting 5000–413
49.4 Sound Transmission 5000–414
49.5 Interior Space Dimensions 5000–414
49.6 Access to Attics 5000–414

Copyright National Fire Protection Association
Provided by IHS under license with NFPA
No reproduction or networking permitted without license from IHS
Not for Resale

49.7 Design Conditions 5000–414
49.8 Special Requirements for Occupancies 5000–414
49.9 Vermin Proofing. (Reserved — See Annex B.) 5000–414

Chapter 50 Mechanical Systems 5000–415
50.1 General 5000–415
50.2 Flood Resistance 5000–415
50.3 Refrigeration Machinery Room 5000–415

Chapter 51 Energy Efficiency 5000–415
51.1 General 5000–415
51.2 Commercial 5000–415
51.3 Residential 5000–416
51.4 Manufactured Homes 5000–416
51.5 Day Care 5000–416
51.6 Residential Board and Care 5000–416

Chapter 52 Electrical Systems 5000–416
52.1 General 5000–416
52.2 Flood Resistance 5000–416

Chapter 53 Plumbing Systems 5000–416
53.1 General 5000–416
53.2 Flood Resistance 5000–416

Chapter 54 Elevators and Conveying Systems 5000–416
54.1 General 5000–416
54.2 Installation 5000–416
54.3 Ambulance Stretcher Accommodation 5000–416
54.4 Openings to Exits 5000–416
54.5 Elevator Machine Rooms and Machinery Spaces 5000–416
54.6 Number of Cars in a Hoistway 5000–417
54.7 Hoistway Enclosure 5000–417
54.8 Flood Resistance 5000–417
54.9 Vents Required 5000–417
54.10 Conveying Systems 5000–417
54.11 Wheelchair Lifts 5000–417

Chapter 55 Fire Protection Systems and Equipment 5000–417
55.1 General 5000–417
55.2 Fire Detection, Alarm, and Communications Systems 5000–418
55.3 Automatic Sprinklers 5000–420
55.4 Standpipe Systems 5000–420
55.5 Other Automatic Extinguishing Equipment 5000–421
55.6 Portable Fire Extinguishers 5000–421
55.7 Smoke Control 5000–421
55.8 Fire Hydrants 5000–421
55.9 Private Fire Service Mains 5000–421
55.10 Protection of Cooking Hazards 5000–421
55.11 Special Inspections and Tests 5000–421

Annex A Explanatory Material 5000–422

Annex B Vermin Proofing 5000–509

Annex C Flood Resistant Construction 5000–510

Annex D Construction Types and Enhanced Fire Compartment Requirements 5000–513

Annex E Informational References 5000–529

Index 5000–533

Copyright National Fire Protection Association
Provided by IHS under license with NFPA
No reproduction or networking permitted without license from IHS
Not for Resale

NFPA 5000®

Building Construction and Safety Code®

2006 Edition

IMPORTANT NOTE: This NFPA document is made available for use subject to important notices and legal disclaimers. These notices and disclaimers appear in all publications containing this document and may be found under the heading "Important Notices and Disclaimers Concerning NFPA Documents." They can also be obtained on request from NFPA or viewed at www.nfpa.org/disclaimers.

NOTICE: An asterisk (*) following the number or letter designating a paragraph indicates that explanatory material on the paragraph can be found in Annex A.

Changes other than editorial are indicated by a vertical rule beside the paragraph, table, or figure in which the change occurred. These rules are included as an aid to the user in identifying changes from the previous edition. Where one or more complete paragraphs have been deleted, the deletion is indicated by a bullet (•) between the paragraphs that remain.

A reference in brackets [ ] following a section or paragraph indicates material that has been extracted from another NFPA document. As an aid to the user, the complete title and edition of the source documents for mandatory extracts are given in Chapter 2 and those for nonmandatory extracts are given in Annex E. Editorial changes to extracted material consist of revising references to an appropriate division in this document or the inclusion of the document number with the division number when the reference is to the original document. Requests for interpretations or revisions of extracted text shall be sent to the technical committee responsible for the source document.

Information on referenced publications can be found in Chapter 2 and Annex E.

Chapter 1 Administration

1.1* Scope.

1.1.1 General. The *Code* addresses those construction, protection, and occupancy features necessary to minimize danger to life and property.

1.1.2 *Code* Title. The provisions of this document shall constitute and be known as *NFPA 5000, Building Construction and Safety Code*, hereinafter referred to as "this *Code*" or "the *Code*."

1.2* Purpose. The purpose of the *Code* is to provide minimum design regulations to safeguard life, health, property, and public welfare and to minimize injuries by regulating and controlling the permitting, design, construction, quality of materials, use and occupancy, location, and maintenance of all buildings and structures within the jurisdiction and certain equipment specifically regulated herein.

1.3 Application.

1.3.1 Buildings and Structures. The provisions of the *Code* shall apply to the construction, alteration, repair, equipment, use and occupancy, maintenance, relocation, and demolition of every building or structure, or any appurtenances connected or attached to such buildings or structures within the jurisdiction.

1.3.2 References to Requirements of Other Codes or Standards. Where the requirements of a referenced code or standard differ from the requirements of this *Code*, the requirements of this *Code* shall govern.

1.3.3 Moved Buildings and Structures. The provisions of the *Code* shall apply to buildings and structures moved into or within the jurisdiction.

1.3.4 Existing Buildings and Structures. The provisions of this *Code* shall apply to existing buildings where any one of the following conditions applies:

(1) A change of use or occupancy classification occurs.
(2) A repair, renovation, modification, reconstruction, or addition is made.
(3) The building or structure is relocated.
(4) The building is considered damaged, unsafe, or a fire hazard.
(5) A property line that affects compliance with any provision of this *Code* is created or relocated.

1.4 Retroactivity. (Reserved)

1.5 Equivalency.

1.5.1 General. Nothing in this *Code* shall prohibit methods of construction, materials, and designs not specifically prescribed in this *Code* where equivalent alternatives are approved by the authority having jurisdiction.

1.5.2 Approval of Alternatives. Alternative systems, methods, or devices approved as equivalent by the authority having jurisdiction shall be recognized as being in compliance with this *Code*.

1.5.3 Tests.

1.5.3.1 Whenever the authority having jurisdiction determines that there is insufficient evidence of proof of equivalency with the prescribed requirements of this *Code*, the authority having jurisdiction shall be authorized to require tests showing proof of equivalency.

1.5.3.2 Tests required by the authority having jurisdiction shall be provided by the owner at no expense to the jurisdiction.

1.5.3.3 Tests shall be conducted as specified in this *Code* or, where test methods are not specified in this *Code*, they shall be conducted as required by the authority having jurisdiction.

1.5.4 Approval. The authority having jurisdiction shall determine whether the proposed alternate methods of construction, materials, and designs are at least equivalent to the prescribed requirements of this *Code*.

1.6 Units.

1.6.1 SI Units. Metric units in this *Code* are in accordance with the modernized metric system known as the International System of Units (SI).

1.6.2 Primary Values. The inch-pound value for a measurement, and the SI value given in parentheses, shall each be acceptable for use as primary units for satisfying the requirements of this *Code*.

1.7 Enforcement.

1.7.1 Organization.

1.7.1.1 Creation of Department of Building and Safety. There is hereby created in the jurisdiction a department of building and safety that shall be under the control of the director of building and safety, who shall be the authority having jurisdiction.

Copyright National Fire Protection Association
Provided by IHS under license with NFPA
No reproduction or networking permitted without license from IHS
Not for Resale

1.7.1.2 Delegation of Authority. The authority having jurisdiction is hereby empowered to delegate authority and assignments to subordinate employees. Such employees shall have the authority to carry out duties and assignments, as delegated by the authority having jurisdiction.

1.7.1.3 Right of Entry. Whenever it is necessary to make an inspection to enforce any of the provisions of this *Code*, or whenever the authority having jurisdiction has reason to believe that there exists in any building, or upon any premises, a condition that makes such building or premises unsafe, as specified by 1.7.5.3.1.1, the authority having jurisdiction shall be authorized to enter such building or premises at reasonable times to inspect the same, or to perform any duty imposed on the authority having jurisdiction by this *Code*, under the following conditions:

(1) The authority having jurisdiction shall first present proper credentials and request entry.
(2) In the event that entry is refused, or the person authorized to grant entry is unavailable, the authority having jurisdiction shall have recourse to remedy provided by law to secure entry.

1.7.1.4 Concealed Work. The authority having jurisdiction is hereby authorized to order parts of any building or structure to be exposed for inspection when the building or part thereof is in an unsafe or a dangerous condition, when there is willful or negligent concealment of a violation of this *Code*, or when work subject to a required inspection has been covered prior to the required inspection. All costs incurred in making concealed work available for inspection shall be borne by the owner of the building or structure.

1.7.2 Approvals by Other Regulatory Agencies. The authority having jurisdiction shall have the authority to require that the laws, rules, and regulations of other regulatory agencies having jurisdiction are met before a building permit is issued to an applicant.

1.7.2.1 The authority having jurisdiction shall have the authority to require evidence in writing to show that other regulatory agencies having jurisdiction over the design, construction, alteration, repair, equipment, maintenance, demolition, and relocation of buildings and structures in the jurisdiction have approved the proposed construction.

1.7.2.2 The authority having jurisdiction shall not be held responsible for enforcement of the regulations of the regulatory agencies specified in 1.7.2.1, unless authorized to enforce the regulations of such an agency.

1.7.3 Board of Appeals.

1.7.3.1 Creation of Board of Appeals.

1.7.3.1.1 There is hereby established a board of appeals, consisting of at least five members, qualified by training and experience to rule on matters relating to building, who shall be appointed by the jurisdiction. The board shall select one of its members to serve as chair, and the authority having jurisdiction shall be an ex officio member without vote and shall act as secretary to the board.

1.7.3.1.2 Whenever the authority having jurisdiction rejects or refuses to approve the manner of proposed construction or the suitability of alternative materials and methods of construction, the owner of such building or structure or a duly authorized agent shall be permitted to request an appeal from the decision of the authority having jurisdiction by means of the board of appeals.

1.7.3.2 Term of Office. The jurisdiction shall appoint one member of the board of appeals for a term of 1 year, two members for a term of 2 years, and two members for a term of 3 years, and, thereafter, they shall be appointed for a term of 3 years. The authority shall fill vacancies for an unexpired term.

1.7.3.3 Quorum. Two-thirds, but not less than four members, of the board of appeals shall constitute a quorum. In varying the application of any provision of this *Code*, or in modifying an order of the authority having jurisdiction, a majority vote of the members present shall be required.

1.7.3.4 Meetings and Records. Meetings of the board shall be held at the call of the chair and at such other times as the board determines. All hearings before the board shall be open to the public. The board shall keep minutes of its proceedings showing the vote of each member on every question, or if the member is absent or fails to vote, indicating such actions. The board shall also keep records of its examinations and other official actions. Minutes and records of the board shall be public records.

1.7.3.5 Procedures. The board shall establish rules and regulations for its own procedures consistent with the provisions of this *Code* and applicable laws and statutes.

1.7.3.6 Appeals. An appeal of a decision shall be filed within 30 days from the date of the decision being appealed by filing with the authority having jurisdiction and the board of appeals a notice of appeal, specifying the grounds thereof. In the case of a building or structure that, in the opinion of the authority having jurisdiction, is unsafe or dangerous, the authority having jurisdiction shall be permitted to limit the time for such appeal to a shorter period. The authority having jurisdiction shall transmit to the board all the papers relating to the appeal and shall schedule a public hearing thereon.

1.7.3.7 Authority of the Board.

1.7.3.7.1 The board of appeals shall provide for reasonable interpretation of the provisions of this *Code* and rule on appeals from decisions of the authority having jurisdiction. The ruling of the appeals board shall ensure that the intent of the *Code* is complied with and public safety is secured.

1.7.3.7.2 The board shall be permitted to grant modifications through the procedures outlined for equivalency in Section 1.5.

1.7.3.7.3 A decision of the board to modify an order of the authority having jurisdiction shall be in writing and shall specify the manner in which such modification is made, the conditions upon which it is made, and the reasons therefor.

1.7.3.8 Decisions.

1.7.3.8.1 Every decision of the board shall be entered in the minutes of the board meeting. Every decision shall be promptly filed in the office of the authority having jurisdiction and shall be open for public inspection. A certified copy shall be sent by mail or messenger to the appellant, and a copy shall be publicly posted in the office of the authority having jurisdiction for 2 weeks after filing. The decision of the board shall be final, subject to such remedy as any aggrieved party might have through legal, equity, or other avenues of appeal or petition.

Copyright National Fire Protection Association
Provided by IHS under license with NFPA
No reproduction or networking permitted without license from IHS
Not for Resale

1.7.3.8.2 If a decision of the board reverses or modifies a refusal, order, or disallowance of the authority having jurisdiction, or varies the application of any provision of this *Code*, the authority having jurisdiction shall take action immediately in accordance with such decision.

1.7.4 Liability.

1.7.4.1 Any officer, employee, or member of the board of appeals charged with the enforcement or interpretation of this *Code*, acting for the applicable governing body in the discharge of his/her duties, shall not thereby render himself/herself personally liable. Further, all such persons shall be relieved from all personal liability for any damage they accrue to persons or property as a result of any act required or permitted in the discharge of their duties. Any suit brought against any officer or employee because of such act performed in the course of enforcement of any provision of this *Code* shall be defended by the legal counsel of the jurisdiction until the termination of the proceedings.

1.7.4.2 This *Code* shall not be construed to relieve from, or lessen the responsibility of, any person owning, operating, or controlling any building or structure for any damages to persons or property caused by defects. Further, the *Code* enforcement agency or its parent jurisdiction shall not be held as assuming any such liability by reason of the inspections authorized by this *Code* or any permits or certificates issued under this *Code*.

1.7.5 Compliance of Buildings and Structures.

1.7.5.1 Alterations or Change of Occupancy Classification. Alterations or change of occupancy classification shall be in accordance with Chapter 15.

1.7.5.2 Maintenance of Buildings and Property.

1.7.5.2.1 Buildings. The requirements contained in this *Code* for maintenance of buildings shall apply to all buildings and structures in existence on the date of enactment of this *Code* and those hereafter erected. All buildings and structures and all parts thereof shall be maintained in a safe condition, and all devices and safeguards required by this *Code* shall be maintained in operating condition. The requirements of this paragraph shall not be construed as permitting the removal or nonmaintenance of existing devices or safeguards, unless authorized by the authority having jurisdiction.

1.7.5.2.2 Existing Installations. Buildings in existence at the time of the adoption of this *Code* shall be permitted to have their existing use or occupancy continued if such use or occupancy was legal at the time of the adoption of this *Code*, provided that such continued use is not dangerous to life.

1.7.5.3 Unsafe Buildings and Fire Hazards.

1.7.5.3.1 Descriptions.

1.7.5.3.1.1 Description of Unsafe Building. All buildings that are, or that hereafter become, characterized by the following shall be considered unsafe buildings:

(1) Existence of unsanitary conditions
(2) Deficiency in means of egress
(3) Hazard from fire or natural or man-made threats
(4) Dangers to human life or public welfare by reason of illegal or improper use, occupancy, or maintenance
(5) Noncompliance with the provisions of codes applicable at time of construction
(6) Significant damage by fire or explosion or other natural or man-made cause
(7) Incompleteness — incomplete buildings for which building permits have expired
(8) Falling away, hanging loose, or loosening of any siding, block, or other building material, appurtenance, or part thereof of a building
(9) Existence of unsanitary conditions by reason of inadequate or malfunctioning sanitary facilities or waste disposal systems
(10) *Existence of structurally unsafe conditions

1.7.5.3.1.2 Description of Building as a Fire Hazard. A building shall be deemed to be a fire hazard and unsafe under the following conditions:

(1) When vacant and unguarded and open to unauthorized entry at door or window
(2) When there is an accumulation of combustible dust, debris, or materials therein deemed to be a hazard by the authority having jurisdiction
(3) When the building does not provide the exits or fire protection required herein for the most recent occupancy
(4) When electrical or mechanical installations or systems create a hazardous condition

1.7.5.3.2 Authority of the Authority Having Jurisdiction Regarding Unsafe Buildings or Buildings That Are a Fire Hazard. All buildings deemed to be unsafe or to be a fire hazard by the authority having jurisdiction, based on 1.7.5.3.1, are hereby declared to be public nuisances and shall be demolished and removed from the premises concerned or shall be made safe and sanitary in accordance with Chapter 15 of this *Code*.

1.7.5.3.3 Inspection of Unsafe Buildings. The authority having jurisdiction, on his/her own initiative, or as a result of reports filed with the department of building and safety, shall examine or cause to be examined every building appearing to be or reported to be unsafe, and, if such is found to be an unsafe building as defined in 1.7.5.3.1.1, the authority having jurisdiction shall post the property on which the building is located and shall furnish the owner of such building with a written notice of violation. The manner of posting and furnishing written notice shall be as provided in 1.7.5.3.4 and 1.7.5.3.5, inclusive.

1.7.5.3.4 Notice of Violation. At least 14 days prior to posting a noncomplying building, the authority having jurisdiction shall give the owner of the premises written notice by certified mail, addressed to the owner's last known address. If proof of service by certified mail is not completed by signed return receipt, a copy of the written notice shall be affixed to the structure concerned, and such procedure shall be considered proper service, and the time for compliance stipulated in the notice shall commence with the date on which such notice is so affixed. This written notice shall state the defects that constitute a violation of this *Code* and prescribe the action to be taken by the owner of the building to comply with the *Code* and the time within which compliance must be accomplished. Such time shall be reasonable under the circumstances of the case and shall be subject to reasonable extension, when requested in writing, for reasons that the authority having jurisdiction considers as justifying an extension of time. All extensions of time shall be by written approval of the authority having jurisdiction. In addition, this written notice shall explain the right of appeal of the decision of the authority having jurisdiction to the board of appeals and shall state that,

Copyright National Fire Protection Association
Provided by IHS under license with NFPA
No reproduction or networking permitted without license from IHS
Not for Resale

unless there is compliance with the instructions in the notice of violation or an appeal is filed, a public hearing before the board of appeals will be initiated by the authority having jurisdiction after the time period for compliance has expired.

1.7.5.3.5 Recording of Notice of Violation.

1.7.5.3.5.1 If the owner of the property has not complied with the requirements as stated in the notice of violation within the time specified, the authority having jurisdiction shall file an appropriate instrument in the office of the clerk of the circuit court, to be recorded in the public records of the jurisdiction in which the violation occurred, indicating that violations of this *Code*, and of 1.7.5.3.4 thereof, exist upon the property involved.

1.7.5.3.5.2 The recording of the notice of violation shall constitute legal notice to all concerned, as well as to any subsequent purchasers, transferees, grantees, mortgagees, lessees, and all persons claiming or acquiring interest in the property.

1.7.5.3.5.3 When the violation specified in the notice of violation has been corrected and the filing fees incurred have been paid, the authority having jurisdiction shall file a certificate attesting that the violation has been corrected.

1.7.5.3.6 Posting Notice of Violation. The authority having jurisdiction shall post a signed notice in a conspicuous location on the building that has been determined to be unsafe, but not before 14 days after the notice of violation provided in 1.7.5.3.4 has been served. The posted notice shall be dated and shall read as follows:

> UNSAFE BUILDING — This building is unsafe based on the provisions of 1.7.5.3 of *NFPA 5000, Building Construction and Safety Code*. This building shall be vacated and shall not be occupied. Action to repair or remove this building shall be taken by the owner as prescribed by written notice previously served. THIS NOTICE SHALL NOT BE REMOVED EXCEPT BY THE AUTHORITY HAVING JURISDICTION.

1.7.5.3.7 Emergency Action.

1.7.5.3.7.1 When, in the opinion of the authority having jurisdiction, an imminent danger exists, the authority having jurisdiction shall be authorized to order the occupants to vacate, or temporarily close for use or occupancy, the rights-of-way, sidewalks, streets, or adjacent buildings or nearby areas. The authority having jurisdiction shall have the authority to institute such other temporary safeguards as deemed necessary. The authority having jurisdiction shall be authorized to employ the necessary labor and materials to perform the required work. The authority having jurisdiction shall promptly notify the local emergency services of buildings posted as unsafe and ordered to be vacated. The authority having jurisdiction shall also notify the emergency services when unsafe conditions have been remedied and the building is safe for occupancy and use.

1.7.5.3.7.2 Costs incurred in the performance of emergency work shall be paid by the governmental authority having jurisdiction. Upon recording in the public records of the county in which such emergency work was completed, a certificate, executed by the authority having jurisdiction, certifying the amount expended and the reasons therefor shall be issued, and the cost shall become a lien against the property on which such emergency work was required.

1.7.5.3.8 Appeal and Review. The owner of, or anyone having an interest in, a building that has been determined to be unsafe, concerning which a notice of violation has been served by the authority having jurisdiction as stated in the notice of violation, shall be permitted to appeal to the board of appeals, and such appeal shall be filed in accordance with the provisions of 1.7.3.6 and 1.7.3.7 prior to the expiration of the time allowed for compliance specified in such notice. In no case shall the appeal period be less than 15 days.

1.7.6 Building Permits, Construction Documents, and Inspections.

1.7.6.1 Permits.

1.7.6.1.1 Permits Required.

1.7.6.1.1.1 No person, firm, or corporation shall move a property line that affects an existing structure or erect, construct, enlarge, alter, repair, relocate, improve, convert, or demolish any building, structure, or part thereof in the jurisdiction, or cause the same to be done, without first obtaining from the authority having jurisdiction a separate building permit for the work to be accomplished for each such building, structure, or temporary structure. Permits shall not be required for the following:

(1) Painting, papering, tiling, and carpeting and cabinets, countertops, and similar finish work
(2) Temporary motion picture, television, and theater stage sets and scenery
(3) Window awnings supported by an exterior wall for one- and two-family residential use
(4) One-story detached accessory structures used as tool and storage sheds or playhouses or for other similar uses, provided that the floor area does not exceed 120 ft^2 (11.1 m^2)
(5) Fences not over 6 ft (1830 mm) high
(6) Movable cases, counters, and partitions not over 6 ft (1830 mm) high

1.7.6.1.1.2 Permits shall be required for plumbing, air-conditioning, heating, and ventilating systems; elevators, escalators, and transporting assemblies; and gas, sprinkler, roofing, electrical, and show/ride installations.

1.7.6.1.1.3 Special building permits for temporary structures placed in flood hazard areas shall comply with Section 39.15.

1.7.6.1.1.4 A previously issued lawful permit shall be valid on the terms of the *Code* under which it was issued, provided that no such permit shall be subject to the limitations specified in 1.7.6.1.

1.7.6.1.1.5 A special building permit that remains in effect for a limited time shall be obtained before the erection of temporary structures such as construction sheds, seats, canopies, tents, and fences used in construction work or for temporary purposes such as reviewing stands. Temporary structures shall be completely removed upon the expiration of the time limit stated in the permit.

1.7.6.1.2 Other Jurisdictions. Permits required for work to be accomplished under the jurisdiction of other departments shall be issued only on presentation of written proof of compliance with 1.7.2 of this *Code*.

1.7.6.2 Applications.

1.7.6.2.1 Application Requirements. To obtain a permit, the applicant shall first file an application therefor in writing on a

Copyright National Fire Protection Association
Provided by IHS under license with NFPA
No reproduction or networking permitted without license from IHS
Not for Resale

form supplied for that purpose by the department of building and safety. Such application shall include the following:

(1) Identification and description of the work to be covered by the permit for which application is made
(2) Description of the land on which the proposed work is to be done by lot, block, tract, and street address, or similar description that will locate specifically the proposed building or work
(3) Indication of the use or occupancy of all parts of the building
(4) Construction documents as required in 1.7.6.3
(5) Valuation of the proposed work
(6) Signature of the permittee or his/her authorized agent
(7) Provision of other information as required by the authority having jurisdiction

1.7.6.2.2 Surveyor's Certificate Requirements. Application for permit for new construction and additions shall be accompanied by a registered land surveyor's certificate and plan in duplicate on which shall be indicated clearly the following:

(1) Property corner stakes
(2) Property line dimensions
(3) Existing structures and their location
(4) Existing rights-of-way
(5) Sidewalks
(6) Easements
(7) Street zoning and property zoning of record
(8) Critical elevations and building setbacks required by law
(9) General block plan
(10) Other pertinent survey data

1.7.6.2.3 Waiver of Surveyor's Certificate Requirement. The authority having jurisdiction shall be granted authority to waive the requirements for the surveyor's certificate when property line stakes are known to be in place and when the work contemplated is minor and is clearly within building lines.

1.7.6.2.4 Requirements for Relocation of Buildings. Application for permit for relocating a building within the jurisdiction shall be submitted in the form that the authority having jurisdiction requests. The application shall be accompanied by plans or other data that, in the opinion of the authority having jurisdiction, are necessary to show compliance with this *Code* and the zoning and other regulations of the jurisdiction. A physical examination of the structure shall be made by the authority having jurisdiction before it issues a permit for relocation. *(See also 1.7.6.6.)*

1.7.6.2.5 Requirements for Demolition of Buildings and Structures. Application for permits for the work of demolition of buildings or structures shall be accepted only from persons or firms qualified to do the work. The qualifications of persons or firms permitted to demolish a building or structure shall be in accordance with the requirements of the jurisdiction providing for qualification and certification of construction tradespeople.

1.7.6.3 Construction Documents.

1.7.6.3.1 Requirements for Construction Documents.

1.7.6.3.1.1 Each application for a permit shall be accompanied by a minimum of two sets of construction documents and calculations when required by the authority having jurisdiction.

1.7.6.3.1.2 When compliance with this *Code* can be determined without the submittal or review of plans, specifications, and calculations, the authority having jurisdiction shall be permitted to issue a permit without construction documents and calculations being submitted for review.

1.7.6.3.1.3 The construction documents shall be prepared by a registered design professional where required by statutes of the jurisdiction in which the construction site is located.

1.7.6.3.1.4 Unless otherwise provided in 1.7.6.3.1.5, plans shall be drawn to scale, shall be identified by name of designer and owner on every sheet, and shall be mechanically reproduced prints on substantial paper or cloth. A plot plan shall show all occupied and unoccupied parts of the lot or lots and shall delineate the accessible route(s) between structures and features that are required to be accessible in accordance with Chapter 12 of this *Code*. The use, name, and occupancy of all parts of the building shall be shown, including all foundations, wall sections, floor plans, elevations, and structural details. Mechanical, plumbing, electrical, fire sprinkler, and fire alarm details shall be shown on the plans and represent the designs for those disciplines, along with such other information to show clearly the nature, character, and location of the proposed work.

1.7.6.3.1.5 For tenant improvements or building repairs, renovations, modifications, or reconstruction in accordance with Chapter 15, plans shall be drawn to scale, shall be identified by name of designer and owner on every sheet, and shall be mechanically reproduced prints on substantial paper or cloth. The use, name, and occupancy of the work area shall be shown. Construction documents shall indicate the location, nature, and extent of the proposed work and shall show in detail that the proposed work will conform to the provisions of this *Code*.

1.7.6.3.1.6 Construction documents for all buildings shall indicate required smoke-resistant-rated and fire resistance–rated construction and how the required structural integrity, fire resistance ratings, and smoke resistance will be maintained where a joint or penetration of a required fire- or smoke-resistant wall, floor, or partition will be made for electrical, gas, or mechanical work; plumbing and communications conduits; pipes; and systems. Construction documents shall also indicate in sufficient detail how the fire integrity will be maintained where required fire-resistant floors intersect the exterior walls.

1.7.6.3.1.7 The classification of fire resistance–rated floor and roof construction shall be identified on the plans as restrained or unrestrained. Only where a registered design professional has furnished documentation satisfactory to the authority having jurisdiction verifying that the construction is restrained as specified in 8.2.1.4 shall the construction be considered restrained.

1.7.6.3.1.8 The construction documents and shop drawings submitted to the authority having jurisdiction shall contain sufficient detail for evaluation of the protected hazards and the effectiveness of the system. The shop drawings for the installation of fire protection systems shall be submitted for review and approval prior to the installation of a fire protection system.

1.7.6.3.1.9 For high-rise buildings, covered mall buildings, and buildings containing atriums, the construction documents shall include a description of the fire protection systems

Copyright National Fire Protection Association
Provided by IHS under license with NFPA
No reproduction or networking permitted without license from IHS
Not for Resale

in the building. This description shall include the basic concepts used for suppression, alarm, notification, egress, compartmentation, smoke control, and other related systems, as well as the coordination of those systems. Upon completion of the project, a copy of the approved documentation shall be maintained at the site.

1.7.6.3.2 Examination of Construction Documents.

1.7.6.3.2.1 The authority having jurisdiction shall examine all construction documents and applications for permits and amendments thereto for their compliance with this *Code*. If the applications or the construction documents do not conform to the requirements of this *Code*, the authority having jurisdiction shall reject such application for a building permit in writing, stating the reasons therefor. Construction documents that are rejected shall be returned for corrections. If, upon examination, the application and construction documents are found to comply with the requirements of this *Code*, the construction documents shall be signed by the authority having jurisdiction or its deputy and shall be stamped "approved."

1.7.6.3.2.2 When practical difficulties are involved in carrying out the requirements of this *Code*, the authority having jurisdiction shall be permitted to grant modifications for individual cases. Such permission shall require, first, a finding that a special individual reason makes strict compliance impractical and, second, that the modification is in conformance with the intent and purpose of the *Code*. Fire protection and structural integrity shall not be lessened.

1.7.6.3.3 Partial Approval.

1.7.6.3.3.1 Pending the completion of checking of construction documents, and on payment of the fee required, the authority having jurisdiction, at its discretion, shall be permitted to authorize the issuance of a partial permit for site preparation, excavation, and construction; foundation, structural, or show/ride installations; or any combination thereof. The holder of such partial permit shall proceed at his/her own risk and without assurance that a completion permit will be granted.

1.7.6.3.3.2 Whenever there is a delay in approval of construction documents under special circumstances, the authority having jurisdiction shall be permitted to allow the builder to place tool sheds, materials, batterboards, and construction equipment on the site prior to actual construction, or to permit exploratory uncovering of concealed structural elements of existing buildings for design information, pending completion of construction documents for proposed alterations.

1.7.6.3.3.3 The construction documents for each phase shall be complete in themselves, so that review and inspection can properly be made. Preliminary plans of the total building shall be submitted with the construction documents, and with sufficient detail, so that proper evaluation can be made. Areas and items not included in the phase to be permitted shall be shown as not included.

1.7.6.3.3.4 Deferred submittal of construction documents shall be approved by the authority having jurisdiction prior to the issuance of a building permit. The registered design professional (RDP) for design shall identify all deferred submittals in writing with the application for permit. Construction documents for deferred submittal items shall be reviewed by the RDP for design for general conformance to the RDP's design and then submitted to the authority having jurisdiction. Deferred submittal items shall not be installed until their performance requirements and construction documents have been approved by the authority having jurisdiction.

1.7.6.3.4 Approved Construction Documents.

1.7.6.3.4.1 The authority having jurisdiction shall retain one set of the approved construction documents and calculations. The other set shall be kept at the building site, open to inspection at all times when the offices of the jurisdiction are open.

1.7.6.3.4.2 After permit issuance, all changes and deviations from the approved construction documents shall be submitted and approved by the authority having jurisdiction prior to implementing the changes on site.

1.7.6.3.4.3 Approved construction documents and amendments thereto that are retained by the authority having jurisdiction shall become public record, provided that they shall be considered as confidential records of their author, that they shall be open to the public only for inspection, and that the authority having jurisdiction shall permit bona fide owners or designers employed by such owners to inspect the construction documents when not available from their author. Upon written application, the authority having jurisdiction shall permit the construction documents to be copied by the owner in the event of the author's death or the inability of the author to supply copies of the construction documents.

1.7.6.3.4.4 At the time a certificate of occupancy is issued, an updated set of construction documents shall be submitted, and a permit fee shall be paid to reflect increased costs.

1.7.6.3.5 Multitenant Buildings.

1.7.6.3.5.1 Buildings that are to be completed in phases due to occupancy by tenants shall be permitted to be completed by the owner to a "rough-in" status. The individual tenant area shall then have a permit issued, and, upon completion of all work, a certificate of occupancy shall be issued for that area only. The authority having jurisdiction shall approve the certificate of occupancy by stages before starting construction and shall be permitted to require special conditions to provide safety during the completion.

1.7.6.3.5.2 Buildings that will later be occupied by multiple tenants (lessees) shall be permitted to have certain areas constructed to an unfinished rough-in condition without affecting the certificate of occupancy issued for the finished portions of the buildings. Future construction to accommodate individual tenants shall be approved upon submittals of acceptable construction documents for permit purposes. Certificates of occupancy shall be granted on a case-by-case basis when *Code* compliance has been achieved.

1.7.6.4 Permit Fees.

1.7.6.4.1 Fee Requirements. Any person requiring a building permit, in addition to filing an application therefor and before such permit is issued, shall pay such permit fee and plan check fee as required by the jurisdiction.

1.7.6.4.2 Basis of Permit Fee. The jurisdiction shall establish a fee schedule listing all applicable fees and the method of their calculation. The authority having jurisdiction shall be permitted to require an estimate of cost and other descriptive data as a basis for determining the permit fee.

1.7.6.5 Conditions of Permit.

1.7.6.5.1 Permit. When construction documents and application for permit have been approved and the required fee has

Copyright National Fire Protection Association
Provided by IHS under license with NFPA
No reproduction or networking permitted without license from IHS
Not for Resale

been paid, the authority having jurisdiction shall issue a permit for the work. With each permit, the authority having jurisdiction shall issue a permit bearing the legal description of the property, the nature of the work being done, the names of the owner and builder or contractor, and other pertinent information. The permit shall be posted and maintained in legible condition in a conspicuous place within the construction area during the entire time period the work authorized by the permit is in progress.

1.7.6.5.2 Compliance with the *Code*.

1.7.6.5.2.1 Issuing or granting of a permit or approval of construction documents by the authority having jurisdiction shall not be construed to be a permit for, or an approval of, any violations of any of the provisions of this *Code*. No permit presuming to give authority to violate or cancel any of the provisions of this *Code* shall be valid, except insofar as the performance of the work that it authorizes is lawful.

1.7.6.5.2.2 When construction documents have been approved, the issuance of a permit shall not prevent the authority having jurisdiction from thereafter requiring correction of errors in such construction documents, or from preventing building operations being carried on thereunder in violation of this *Code* or of any other regulations of the jurisdiction applicable thereto. Compliance with this *Code* is the responsibility of the owner or his/her authorized agent.

1.7.6.5.3 Time Limitation.

1.7.6.5.3.1 Permits shall expire if the work authorized by such permit is not commenced within 6 months from the date of the permit, or, if after commencing, the work is suspended or abandoned for a period of 6 months at any time during construction operations. The authority having jurisdiction shall be permitted to extend such permit for a period of 90 days from the date of expiration if the work has not commenced, or for a period of 90 days from the date of the last recorded inspection if written application for such extension is received and approved by the authority having jurisdiction prior to the date of expiration of the initial permit, and provided that the proposed work complies with all requirements of the *Code* in effect at the time of such renewal.

1.7.6.5.3.2 A previously issued lawful permit shall be valid under the terms of the *Code* under which it was issued, provided that such permit shall be subject to the limitations specified in 1.7.6.5.3.

1.7.6.5.3.3 Before the work for which a building permit has become void can be recommended, a new permit shall be required. The work for which the new permit is issued shall conform to the provisions of this *Code* at the time of reissuance of the permit. The fee shall be based on the amount of work remaining to be done.

1.7.6.6 Inspection.

1.7.6.6.1 Inspection Requirements.

1.7.6.6.1.1 Before issuing a permit, the authority having jurisdiction shall be permitted to inspect any building or structure for which an application has been received for a permit to enlarge, alter, repair, relocate, demolish, or change the occupancy thereof. The authority having jurisdiction shall inspect all buildings and structures from time to time during the work for which a permit was issued and on completion of the work. The authority having jurisdiction shall cause to be kept a record of every inspection and of all violations of this *Code* and of the correction and disposition of such violations.

1.7.6.6.1.2 Before a permit for moving a building or structure within or into the jurisdiction is issued, the authority having jurisdiction shall be authorized to inspect such building or structure for the purpose of ascertaining that the building being relocated complies with the requirements of this *Code* and all other applicable laws or regulations of the jurisdiction.

1.7.6.6.1.3 All construction or work for which a permit is required shall be subject to mandatory inspections by the authority having jurisdiction, as prescribed in 1.7.6.6.3, and certain types of construction shall have quality assurance, as specified in Chapter 40. Prior to issuance of a certificate of occupancy, a final inspection shall be made by the authority having jurisdiction of all construction or work for which a permit has been issued.

1.7.6.6.1.4 When required by the authority having jurisdiction, it shall make an inspection of materials or assemblies at the place of manufacture or fabrication. A record shall be maintained of every such inspection and of all violations of this *Code* noted during the inspection.

1.7.6.6.1.5 The authority having jurisdiction shall make or cause to be made the inspections required in 1.7.6.6.1. Written reports of inspectors employed by approved inspection services shall be permitted, provided that, after investigation, the authority having jurisdiction is satisfied as to the qualifications and reliability of the inspection service. Costs of such inspections shall be borne by the owner. No certificate called for by any of these requirements shall be based on such reports, unless the reports are in writing and are certified by the officer of the agency who made the inspection. Reports issued by inspection services engaged by the owner or the registered design professional of a building shall be promptly forwarded to the authority having jurisdiction for its information and records.

1.7.6.6.1.6 Work requiring a building permit shall not be commenced until the permit holder or the holder's agent shall have posted the building permit in accordance with the requirements of 1.7.6.5.1. This permit shall be maintained in such position by the permit holder until the certificate of occupancy has been issued by the authority having jurisdiction.

1.7.6.6.2 Inspection of Structural Units. Where a building or part thereof is a structural unit, the integral parts of which have been built or assembled prior to incorporation into the building, such building or part thereof shall conform to the requirements of this *Code*. Inspections shall be made by the authority having jurisdiction as required in this *Code* for the materials and types of construction used in the prefabricated assemblies. The inspection shall be permitted to be waived during prefabrication if the approved agency certifies to the compliance of the construction with this *Code* and supplies evidence of such compliance in writing by a registered design professional or an approved agency or laboratory.

1.7.6.6.3 Mandatory Inspections.

1.7.6.6.3.1 Work requiring mandatory inspections shall not be covered or concealed in any manner without first obtaining the approval of the authority having jurisdiction.

1.7.6.6.3.2 Work shall not be done on any part of a building or structure beyond the stage of work indicated in each of the successive mandatory inspections until inspection has been

Copyright National Fire Protection Association
Provided by IHS under license with NFPA
No reproduction or networking permitted without license from IHS
Not for Resale

completed and written approval has been given by the authority having jurisdiction or its deputy.

1.7.6.6.3.3 The permit holder or permit holder's agent shall notify the authority having jurisdiction of the time when a given stage of construction will be ready for inspection. The authority having jurisdiction shall then make such called inspection and other inspection as necessary, and it either shall approve in writing that stage of the construction as completed or shall notify the permit holder or permit holder's agent specifically wherein the work fails to comply with the provisions of this *Code*.

1.7.6.6.3.4 Inspections shall be conducted for each building element as described in 1.7.6.6.3.4(A) through (P).

(A) Foundations. Inspections for foundations shall be conducted when the excavation for footings is complete, and footing forms and required anchorage and reinforcing steel are in place, but before concrete is placed.

(B) Reinforcing Steel. Inspections of reinforcing steel shall be conducted after all reinforcing steel is in place and supported, and forms are braced, but before the concrete is placed. Reinforcing steel in walls shall be inspected after the steel is in place, with one side of wall forms in place and braced, but before the concrete is placed.

(C)* Lowest Floor. Inspections for the lowest floor for buildings and structures located wholly or partly within the flood hazard area established by 39.4.2 shall be made after the lowest floor level is set. No further vertical construction shall take place until the lowest floor inspection has been completed and the lowest floor elevation has been approved by the authority having jurisdiction. An elevation certificate identifying the lowest floor elevation, as required by 39.12.3.1.3 or 39.12.3.2.3, shall be submitted to the authority having jurisdiction immediately after the floor level is set. The lowest floor inspection shall be in addition to other flood-related special inspections in 1.7.6.6.3.4(N)(5).

(D) Framing. Inspections for framing shall be made at each floor level after all floor, wall, roof framing, and fire blocking are complete, after welds and clip connections are made, and after all pipes, chimneys, vents, ductwork, rough plumbing, and rough electrical work are in place.

(E) Insulation. Inspections for insulation shall be made before lathing, wallboard, or other finishes are applied.

(F) Lathing and Wallboard. Inspections for lathing and wallboard shall be conducted when supports, backing, lath, or wallboard, or any combination thereof, are in place and ready for plaster and other finish work, and all plastering materials are delivered on the job, but before any finish is applied and before wallboard joints and fasteners are taped and finished.

(G) Roofing. Inspections for roofing shall be conducted after the anchor sheet(s) is on and secured and before the installation of capsheet or other finish course.

(H) Masonry. Inspections for masonry shall be conducted after units are set and reinforcing steel is placed and prior to grouting.

(I) Structural Steel. Inspections for structural steel shall be conducted when structural steel members and required connections are complete, but before concealing any members or connections.

(J) Electrical Systems. Inspections for electrical systems shall be made in accordance with the requirements of Chapter 52.

(K) Mechanical Systems. Inspections for mechanical systems shall be made in accordance with the requirements of Chapter 50.

(L) Plumbing Systems. Inspections for plumbing systems shall be made in accordance with the requirements of Chapter 53.

(M) Fire Protection Systems. Inspections for fire protection systems shall be in accordance with applicable standards.

(N) Special Inspections. Special inspections shall be made immediately after completion and at such intervals during the progress of the work as required by the authority having jurisdiction and as follows:

(1) Inspections for elevators and conveying systems shall be made in accordance with the requirements of ASME A17.1, *Safety Code for Elevators and Escalators*, ASME A18.1, *Safety Standard for Platform Lifts and Stairway Chairlifts*, and ASME B20.1, *Safety Standard for Conveyors and Related Equipment*.
(2) Inspections for swimming pools shall be made in accordance with the requirements of this *Code*.
(3) Inspections for signs shall be made in accordance with the requirements of this *Code*.
(4) Inspections shall be made to confirm that stairways, except those used in the means of escape, comply with 11.2.2.3.5 and 11.2.2.3.6 of this *Code* before the installation of carpeting and after the installation of carpeting, provided that measurements made after the installation of carpeting are made to the uncompressed walking surface of the carpet.
(5) For buildings and structures located wholly or partly within the flood hazard area established by 39.4.2, the following criteria shall be met:
    (a) Inspections shall be made to determine the lowest elevation of machinery and equipment servicing the building, adjacent grade elevations, and flood-opening information.
    (b) An elevation certificate identifying the information specified in 1.7.6.6.3.4(N)(5)(a), as required by 39.12.3.1.3 or 39.12.3.2.3, shall be submitted to the authority having jurisdiction before a certificate of occupancy is issued.

(O) Other Inspections. Other inspections shall be permitted. Prefabricated assemblies shall be permitted to be inspected at the place of manufacture.

(P) Final Inspection. A final inspection shall be made when the building or structure is completed and is ready for use or occupancy.

1.7.6.6.3.5 Requests for final inspections shall be made to the office of the authority having jurisdiction, and a reasonable time shall be allowed for such inspection to be made. Rejection or refusal to approve the work for reasons of incompleteness, violation of the provisions of this *Code*, or inadequacy of the construction shall nullify the request for final inspection. The work shall be made to comply with the *Code*, and the request for inspection shall be repeated as required herein.

1.7.6.6.4 Inspection Reports. The authority having jurisdiction shall keep a record of all inspections made, results, plans filed, surveys made, and certificates of occupancy issued.

Copyright National Fire Protection Association
Provided by IHS under license with NFPA
No reproduction or networking permitted without license from IHS
Not for Resale

1.7.6.7 Certificate of Occupancy.

1.7.6.7.1 Certificate Requirements.

1.7.6.7.1.1 No building hereafter erected, altered, enlarged, or relocated, or for which a change of occupancy has been made, shall be used in whole or in part until a certificate of occupancy has been issued by the authority having jurisdiction certifying that the building and occupancy are in accordance with the provisions of this *Code* and all other laws and regulations applying thereto. When the building or part thereof complies with the provisions of all pertinent laws and regulations, the authority having jurisdiction shall issue the certificate of occupancy for the building or part thereof. A certificate of occupancy for places of assembly shall indicate thereon, and make record of, the number of persons for whom such certificate is issued. In all manufacturing, commercial, storage, or warehouse occupancies, the design live loads shall be plainly posted.

1.7.6.7.1.2 When, in the opinion of the authority having jurisdiction, any building rehabilitated, altered, or enlarged, or any combination thereof, is in compliance with this *Code*, the owner shall be issued a certificate of compliance affirming substantial compliance with the requirements of this *Code*, in lieu of a certificate of occupancy.

1.7.6.7.2 Existing Occupancy. The authorized occupancy of any structure existing on the date of adoption of this *Code* shall be permitted to continue without change, except as is specifically covered in this *Code* or as is deemed necessary by the authority having jurisdiction for the general safety and welfare of the occupants and public.

1.7.6.7.3 Temporary Certificate of Occupancy. A temporary certificate of occupancy shall be permitted to be issued by the authority having jurisdiction for the use of parts of a building prior to completion of the entire building.

1.7.6.7.4 Connection of Services. It shall be unlawful for a public service corporation or agency to begin utility service to a building or structure, including temporary service for use during building construction or testing operations, until such connection of service has been approved by the authority having jurisdiction.

1.7.6.7.5 Conditions of Certificate of Occupancy. Certificate of occupancy shall be conditioned upon the following:

(1) The completed project meets the conditions of the construction permit, the approved construction documents including all amendments, and all prior approvals.
(2) All required fees have been paid.
(3) All necessary inspections have been completed, and the completed project meets the requirements of this *Code*.
(4) All violations have been corrected, and any assessed penalties have been paid.
(5) All protective devices and equipment required to be installed by this *Code* will continue to be operational, as required by this *Code*.
(6) All quality assurance programs required by Chapter 40 have been completed.

1.7.7 Stop-Work Orders and Revocation of Permit or Certificate.

1.7.7.1 Stop-Work Orders. Whenever any work is being done contrary to provisions of this *Code*, the authority having jurisdiction shall be authorized to order such work stopped. Such work shall immediately stop until authorized by the authority having jurisdiction to proceed.

1.7.7.1.1 Written notice of violations leading to the stop-work order shall be mailed or given to the permit holder or permit holder's agent. Upon issuance of a stop-work order, the work cited shall immediately cease according to the time limitation specified on the order.

1.7.7.1.2 When the violation(s) has been corrected, the authority having jurisdiction shall provide the permit holder or permit holder's agent written notice that the violation(s) has been corrected and that the stop-work order has been lifted.

1.7.7.1.3 Any person continuing work after being served a stop-work order, except work to correct the cited violation(s) or work not included within the scope of the stop-work order, shall be subject to the provisions of 1.7.7.2 and other penalties as prescribed by law.

1.7.7.2 Revocation of Permit. The authority having jurisdiction shall be hereby granted authority to revoke a permit or approval issued under the provisions of this *Code* when any false statement or misrepresentation of fact is made in the application, or on the plans on which the permit or approval was based, or for failure to honor any stop-work order issued under 1.7.7.1 of this *Code*.

1.7.7.2.1 The authority having jurisdiction shall notify the contractor or owner or owner's agent in writing that the permit is revoked. Work performed by person or persons in or about the building or structure, except work required for the correction of violations, shall be prohibited. Any person continuing work after having a permit suspended, except work to correct the cited violation(s), shall be subject to the provisions of 1.7.5.3.4 and 1.7.5.3.5 and any other penalties prescribed by law. If, in the judgment of the authority having jurisdiction, there is imminent danger that requires immediate action, the permit shall be permitted to be revoked verbally, and written notice shall be served later.

1.7.7.2.2 When a permit has been revoked, it shall not be reinstated until all violations leading to the revocation of the permit have been corrected. Written notice of reinstatement shall be given to the permit holder when requested.

1.7.7.3 Revocation of Certificate. When any building or part thereof is being used contrary to the provisions of this *Code*, or any other laws or regulations of the jurisdiction, the authority having jurisdiction shall be authorized to revoke a certificate of occupancy and order such use or occupancy discontinued and the building or part thereof vacated. The authority having jurisdiction shall provide written notice of the revocation of the certificate to the person(s) using or causing to be used such buildings or parts thereof. Continued use of the building or part thereof after the certificate of occupancy has been revoked shall be in violation of this *Code* and subject to the penalties prescribed by law.

Chapter 2 Referenced Publications

2.1 General. The documents or portions thereof listed in this chapter are referenced within this code and shall be considered part of the requirements of this document.

2.2 NFPA Publications. National Fire Protection Association, 1 Batterymarch Park, Quincy, MA 02169-7471.

NFPA 1, *Uniform Fire Code™*, 2006 edition.

--`,,```,,,,````-`-`,,`,,`,`,,`---

Copyright National Fire Protection Association
Provided by IHS under license with NFPA
No reproduction or networking permitted without license from IHS
Not for Resale

NFPA 10, *Standard for Portable Fire Extinguishers,* 2002 edition.

NFPA 11, *Standard for Low-, Medium-, and High-Expansion Foam,* 2005 edition.

NFPA 12, *Standard on Carbon Dioxide Extinguishing Systems,* 2005 edition.

NFPA 12A, *Standard on Halon 1301 Fire Extinguishing Systems,* 2004 edition.

NFPA 13, *Standard for the Installation of Sprinkler Systems,* 2002 edition.

NFPA 13D, *Standard for the Installation of Sprinkler Systems in One- and Two-Family Dwellings and Manufactured Homes,* 2002 edition.

NFPA 13R, *Standard for the Installation of Sprinkler Systems in Residential Occupancies up to and Including Four Stories in Height,* 2002 edition.

NFPA 14, *Standard for the Installation of Standpipe and Hose Systems,* 2003 edition.

NFPA 15, *Standard for Water Spray Fixed Systems for Fire Protection,* 2001 edition.

NFPA 16, *Standard for the Installation of Foam-Water Sprinkler and Foam-Water Spray Systems,* 2003 edition.

NFPA 17, *Standard for Dry Chemical Extinguishing Systems,* 2002 edition.

NFPA 17A, *Standard for Wet Chemical Extinguishing Systems,* 2002 edition.

NFPA 24, *Standard for the Installation of Private Fire Service Mains and Their Appurtenances,* 2002 edition.

NFPA 30, *Flammable and Combustible Liquids Code,* 2003 edition.

NFPA 30A, *Code for Motor Fuel Dispersing Facilities and Repair Garages,* 2003 edition.

NFPA 30B, *Code for the Manufacture and Storage of Aerosol Products,* 2002 edition.

NFPA 31, *Standard for the Installation of Oil-Burning Equipment,* 2001 edition.

NFPA 32, *Standard for Drycleaning Plants,* 2004 edition.

NFPA 33, *Standard for Spray Application Using Flammable or Combustible Materials,* 2003 edition.

NFPA 34, *Standard for Dipping and Coating Processes Using Flammable or Combustible Liquids,* 2003 edition.

NFPA 35, *Standard for the Manufacture of Organic Coatings,* 2005 edition.

NFPA 36, *Standard for Solvent Extraction Plants,* 2004 edition.

NFPA 37, *Standard for the Installation and Use of Stationary Combustion Engines and Gas Turbines,* 2002 edition.

NFPA 40, *Standard for the Storage and Handling of Cellulose Nitrate Film,* 2001 edition.

NFPA 42, *Code for the Storage of Pyroxylin Plastic,* 2002 edition.

NFPA 45, *Standard on Fire Protection for Laboratories Using Chemicals,* 2004 edition.

NFPA 51, *Standard for the Design and Installation of Oxygen–Fuel Gas Systems for Welding, Cutting, and Allied Processes,* 2002 edition.

NFPA 51A, *Standard for Acetylene Cylinder Charging Plants,* 2001 edition.

NFPA 52, *Vehicular Fuel Systems Code,* 2006 edition.

NFPA 54/ANSI 223.1, *National Fuel Gas Code,* 2006 edition.

NFPA 55, *Standard for the Storage, Use, and Handling of Compressed Gases and Cryogenic Fluids in Portable Cylinders and Stationary Containers and Tanks,* 2005 edition.

NFPA 58, *Liquefied Petroleum Gas Code,* 2004 edition.

NFPA 59A, *Standard for the Production, Storage, and Handling of Liquefied Natural Gas (LNG),* 2006 edition.

NFPA 61, *Standard for the Prevention of Fires and Dust Explosions in Agricultural and Food Processing Facilities,* 2002 edition.

NFPA 69, *Standard on Explosion Prevention Systems,* 2002 edition.

NFPA 70, *National Electrical Code®,* 2005 edition.

NFPA 72®, National Fire Alarm Code®, 2002 edition.

NFPA 75, *Standard for the Protection of Information Technology Equipment,* 2003 edition.

NFPA 80, *Standard for Fire Doors and Fire Windows,* 1999 edition.

NFPA 82, *Standard on Incinerators and Waste and Linen Handling Systems and Equipment,* 2004 edition.

NFPA 85, *Boiler and Combustion Systems Hazards Code,* 2004 edition.

NFPA 88A, *Standard for Parking Structures,* 2002 edition.

NFPA 90A, *Standard for the Installation of Air-Conditioning and Ventilating Systems,* 2002 edition.

NFPA 90B, *Standard for the Installation of Warm Air Heating and Air-Conditioning Systems,* 2006 edition.

NFPA 91, *Standard for Exhaust Systems for Air Conveying of Vapors, Gases, Mists, and Noncombustible Particulate Solids,* 2004 edition.

NFPA 92A,, *Standard for Smoke-Control Systems Utilizing Barriers and Pressure Differences,* 2006 edition.

NFPA 96, *Standard for Ventilation Control and Fire Protection of Commercial Cooking Operations,* 2004 edition.

NFPA 99, *Standard for Health Care Facilities,* 2005 edition.

NFPA 99B, *Standard for Hypobaric Facilities,* 2005 edition.

NFPA *101®, Life Safety Code®,* 2006 edition.

NFPA 102, *Standard for Grandstands, Folding and Telescopic Seating, Tents, and Membrane Structures,* 1995 edition.

NFPA 105, *Standard for the Installation of Smoke Door Assemblies,* 2003 edition.

NFPA 110, *Standard for Emergency and Standby Power Systems,* 2005 edition.

NFPA 111, *Standard on Stored Electrical Energy Emergency and Standby Power Systems,* 2005 edition.

NFPA 120, *Standard for Fire Prevention and Control in Coal Mines,* 2004 edition.

NFPA 140, *Standard on Motion Picture and Television Production Studio Soundstages and Approved Production Facilities,* 2004 edition.

NFPA 150, *Standard on Fire Safety in Racetrack Stables,* 2000 edition.

NFPA 211, *Standard for Chimneys, Fireplaces, Vents, and Solid Fuel-Burning Appliances,* 2003 edition.

NFPA 214, *Standard on Water-Cooling Towers,* 2005 edition.

NFPA 220, *Standard on Types of Building Construction,* 2006 edition.

NFPA 241, *Standard for Safeguarding Construction, Alteration, and Demolition Operations,* 2004 edition.

NFPA 251, *Standard Methods of Tests of Fire Resistance of Building Construction and Materials,* 2006 edition.

NFPA 252, *Standard Methods of Fire Tests of Door Assemblies,* 2003 edition.

NFPA 253, *Standard Method of Test for Critical Radiant Flux of Floor Covering Systems Using a Radiant Heat Energy Source,* 2006 edition.

NFPA 255, *Standard Method of Test of Surface Burning Characteristics of Building Materials,* 2006 edition.

NFPA 256, *Standard Methods of Fire Tests of Roof Coverings,* 2003 edition.

NFPA 257, *Standard on Fire Test for Window and Glass Block Assemblies,* 2000 edition.

NFPA 259, *Standard Test Method for Potential Heat of Building Materials,* 2003 edition.

NFPA 262, *Standard Method of Test for Flame Travel and Smoke of Wires and Cables for Use in Air-Handling Spaces,* 2002 edition.

Copyright National Fire Protection Association
Provided by IHS under license with NFPA
No reproduction or networking permitted without license from IHS
Not for Resale

NFPA 265, *Standard Methods of Fire Tests for Evaluating Room Fire Growth Contribution of Textile Coverings on Full Height Panels and Walls,* 2002 edition.

NFPA 268, *Standard Test Method for Determining Ignitability of Exterior Wall Assemblies Using a Radiant Heat Energy Source,* 2001 edition.

NFPA 285, *Standard Fire Test Method for Evaluation of Fire Propagation Characteristics of Exterior Non-Load-Bearing Wall Assemblies Containing Combustible Components,* 2006 edition.

NFPA 286, *Standard Methods of Fire Tests for Evaluating Contribution of Wall and Ceiling Interior Finish to Room Fire Growth,* 2006 edition.

NFPA 288, *Standard Methods of Fire Tests of Floor Fire Door Assemblies Installed Horizontally in Fire Resistance–Rated Floor Systems,* 2001 edition.

NFPA 303, *Fire Protection Standard for Marinas and Boatyards,* 2006 edition.

NFPA 307, *Standard for the Construction and Fire Protection of Marine Terminals, Piers, and Wharves,* 2006 edition.

NFPA 318, *Standard for the Protection of Semiconductor Fabrication Facilities,* 2006 edition.

NFPA 407, *Standard for Aircraft Fuel Servicing,* 2001 edition.

NFPA 409, *Standard on Aircraft Hangars,* 2004 edition.

NFPA 415, *Standard on Airport Terminal Buildings, Fueling Ramp Drainage, and Loading Walkways,* 2002 edition.

NFPA 418, *Standard for Heliports,* 2001 edition.

NFPA 423, *Standard for Construction and Protection of Aircraft Engine Test Facilities,* 2004 edition.

NFPA 430, *Code for the Storage of Liquid and Solid Oxidizers,* 2004 edition.

NFPA 432, *Code for the Storage of Organic Peroxide Formulations,* 2002 edition.

NFPA 434, *Code for the Storage of Pesticides,* 2002 edition.

NFPA 484, *Standard for Combustible Metals,* 2006 edition.

NFPA 490, *Code for the Storage of Ammonium Nitrate,* 2002 edition.

NFPA 495, *Explosive Materials Code,* 2006 edition.

NFPA 501, *Standard on Manufactured Housing,* 2005 edition.

NFPA 502, *Standard for Road Tunnels, Bridges, and Other Limited Access Highways,* 2004 edition.

NFPA 560, *Standard for the Storage, Handling, and Use of Ethylene Oxide for Sterilization and Fumigation,* 2002 edition.

NFPA 654, *Standard for the Prevention of Fire and Dust Explosions from the Manufacturing, Processing, and Handling of Combustible Particulate Solids,* 2006 edition.

NFPA 655, *Standard for Prevention of Sulfur Fires and Explosions,* 2001 edition.

NFPA 664, *Standard for the Prevention of Fires and Explosions in Wood Processing and Woodworking Facilities,* 2002 edition.

NFPA 701, *Standard Methods of Fire Tests for Flame Propagation of Textiles and Films,* 2004 edition.

NFPA 703, *Standard for Fire Retardant–Treated Wood and Fire-Retardant Coatings for Building Materials,* 2006 edition.

NFPA 704, *Standard System for the Identification of the Hazards of Materials for Emergency Response,* 2001 edition.

NFPA 750, *Standard on Water Mist Fire Protection Systems,* 2003 edition.

NFPA 801, *Standard for Fire Protection for Facilities Handling Radioactive Materials,* 2003 edition.

NFPA 804, *Standard for Fire Protection for Advanced Light Water Reactor Electric Generating Plants,* 2001 edition.

NFPA 805, *Performance-Based Standard for Fire Protection for Light Water Reactor Electric Generating Plants,* 2001 edition.

NFPA 820, *Standard for Fire Protection in Wastewater Treatment and Collection Facilities,* 2003 edition.

NFPA 853, *Standard for the Installation of Stationary Fuel Cell Power Systems,* 2003 edition.

NFPA 900, *Building Energy Code,* 2004 edition.

NFPA 909, *Code for the Protection of Cultural Resource Properties – Museums, Libraries, and Places of Worship,* 2005 edition.

NFPA 914, *Code for Fire Protection of Historic Structures,* 2001 edition.

NFPA 1124, *Code for the Manufacture, Transportation, Storage, and Retail Sales of Fireworks and Pyrotechnic Articles,* 2006 edition.

NFPA 1125, *Code for the Manufacture of Model Rocket and High Power Rocket Motors,* 2001 edition.

NFPA 1144, *Standard for Protection of Life and Property from Wildfire,* 2002 edition.

NFPA 1221, *Standard for the Installation, Maintenance, and Use of Emergency Services Communications Systems,* 2002 edition.

NFPA 2001, *Standard on Clean Agent Fire Extinguishing Systems,* 2004 edition.

2.3 Other Publications.

2.3.1 AA Publication. Aluminum Association, Inc., 1525 Wilson Blvd., Suite 600, Arlington, VA 22209.

Aluminum Design Manual: Part 1A, *Aluminum Structures, Allowable Stress Design*, and Part 1-B, *Aluminum Structures, Load and Resistance Factor Design of Buildings and Similar Type Structures*, 2000.

2.3.2 AAMA Publications. American Architectural Manufacturer's Association, Techstreet, 1327 Jones Drive, Ann Arbor, MI 48105.

ANSI/AAMA 101, *Voluntary Specifications for Aluminum Prime Windows and Sliding Glass Doors*, 1988.

AAMA 101V, *Voluntary Specifications for Poly Vinyl Chloride (PVC) Prime Windows and Sliding Glass Doors*, 1986.

2.3.3 ACCA Publication. Air-Conditioning Contractors Association, 2800 Shirlington Road, Suite 300, Arlington, VA 22206.

ACCA, *Residential Load Calculation, Manual J*, 8th edition, 1988.

2.3.4 ACI Publications. American Concrete Institute, P.O. Box 9094, Farmington Hills, MI 48333-9094.

ACI 216.1/TMS 0216.1, *Standard Method for Determining Fire Resistance of Concrete and Masonry Assemblies,* 1997.

ACI 318, *Building Code Requirements for Structural Concrete*, (ACI 318, 2005) *and Commentary* (ACI 318R, 2005), 2005.

ACI 506.2, *Specification for Materials, Proportioning, and Application of Shotcrete*, 1995.

ACI 530/ASCE 5/TMS 402, *Building Code Requirements for Masonry Structures*, 2005.

ACI 530.1/ASCE 6/TMS 602, *Specification for Masonry Structures*, 2005.

2.3.5 AF&PA Publications. American Forest & Paper Association, 1111 19th Street, NW, Suite 800, Washington, DC 20036.

ANSI/AF&PA NDS, *National Design Specifications (NDS) for Wood Construction*, 2005.

AF&PA NDS Supplement, *NDS Supplement — Design Values for Wood Construction*, 2005.

AF&PA SDPWS, *Special Design Provisions for Wind and Seismic*, 2005.

Copyright National Fire Protection Association
Provided by IHS under license with NFPA
No reproduction or networking permitted without license from IHS
Not for Resale

Span Tables for Joists and Rafters, 1993.

Technical Report No. 7, *Permanent Wood Foundation System,* 1987.

Wood Construction Data No. 4, *Plank and Beam Framing for Residential Buildings,* 2003.

ANSI/AF&PA WFCM, *Wood Frame Construction Manual for One- and Two-Family Dwellings,* 2001.

2.3.6 AISC Publications. American Institute of Steel Construction, One East Wacker Drive, Suite 3100, Chicago, IL 60601-2001.

ANSI/AISC 341, *Seismic Provisions for Structural Steel Buildings*, 2005.

ANSI/AISC 360, *Specification for Structural Steel Buildings*, 2005.

2.3.7 AISI Publications. American Iron and Steel Institute, 1401 Connecticut Avenue, Suite 705, Washington, DC 20036.

AISI-NAS, *North American Specification for the Design of Cold-Formed Steel Structural Members*, 2001, including Supplement No. 1, 2004.

AISI-General, *Standard for Cold-Formed Steel Framing—General Provisions*, 2004.

AISI-Header, *Standard for Cold-Formed Steel Framing—Header Design*, 2004.

AISI-Lateral Design, *Standard for Cold-Formed Steel Framing—Lateral Design,* 2004.

AISI-Prescriptive, *Standard for Cold-Formed Steel Framing—Prescriptive Method for One and Two Family Dwellings*, 2001, including 2004 Supplement.

AISI-Truss, *Standard for Cold-Formed Steel Framing—Trusses.* 2004.

AISI-Wall Stud, *Standard for Cold-Formed Steel Framing—Wall Stud Design,* 2004.

2.3.8 AITC Publication. American Institute of Timber Construction, 7012 S. Revere Parkway, Suite 140, Centennial, CO 80112.

ANSI/AITC A190.1, *American National Standard, Structural Glued Laminated Timber,* 2002.

2.3.9 ANSI Publications. American National Standards Institute, Inc., 25 West 43rd Street, 4th floor, New York, NY 10036.

ANSI A14.3, *Safety Requirements for Fixed Ladders,* 2002.

ANSI A208.1, *Standard for Particleboard*, 1999.

ANSI A1264.1, *Safety Requirements for Workplace Floor and Wall Openings, Stairs and Railing Systems*, 1995.

ANSI Z21.56, *Gas Fired Pool Heaters*, 1998.

ANSI Z 97.1, *Glazing Materials Used in Buildings, Safety Performance Specifications and Methods of Test*, 2004.

2.3.10 APSP Publications. The Association of Pool and Spa Professionals, 211 Eisenhower Avenue, Alexandria, VA 22314.

ANSI/NSPI-1, *Standard for Public Swimming Pools,* 2003.

ANSI/NSPI-2, *Standard for Public Spas,* 1999.

ANSI/NSPI-3, *Standard for Permanently Installed Residential Spas,* 1999.

ANSI/NSPI-4, *Standard for Aboveground/Onground Residential Swimming Pools,* 1999, with Addendum 2003.

ANSI/NSPI-5, *Standard for Residential Inground Swimming Pools,* 2003.

ANSI/NSPI-6, *Standard for Residential Portable Spas,* 1999.

ANSI/NSPI-8, *Model Barrier Code for Residential Swimming Pools, Spas, and Hot Tubs,* 1996.

2.3.11 ARI Publications. Air Conditioning and Refrigeration Institute, 4100 North Fairfax Drive, Suite 200, Arlington, VA 22203.

ARI 210/240, *Unitary Air-Conditioning and Air-Source Heat Pump Equipment*, 1994.

ARI 310, *Packaged Terminal Air-Conditioners*, 1993.

ARI 310/380, *Packaged Terminal Air-Conditioner, and Heat Pumps*, 1993.

ARI 325, *Ground Water-Source Heat Pumps*, 1998.

ARI 380, *Packaged Terminal Heat Pumps*, 1993.

2.3.12 ASCE Publications. American Society of Civil Engineers, 1801 Alexander Bell Drive, Reston, VA 20191-4400.

ASCE/SEI 3, *Standard for the Structural Design of Composite Slabs*, 1991.

ASCE/SEI 7, *Minimum Design Loads for Buildings and Other Structures*, 2005 with Supplement 1.

ASCE/SEI 8, *Standard Specification for the Design of Cold-Formed Stainless Steel Structural Members*, 2002.

ASCE/SEI 17, *Air Supported Structures*, 1996.

ASCE/SEI 19, *Structural Applications of Steel Cables for Buildings*, 1996.

ASCE/SEI 23, *Specification for Structural Steel Beams with Web Openings*, 1997.

ASCE/SEI 24, *Flood Resistant Design and Construction,* 2005.

ASCE/SFPE 29, *Standard Calculation Methods for Structural Fire Protection*, 2005.

ASCE/SEI 31, *Seismic Evaluation of Existing Buildings*, 2002.

2.3.13 ASHRAE Publications. American Society of Heating, Refrigerating and Air Conditioning Engineers, Inc., 1791 Tullie Circle, NE, Atlanta, GA 30329-2305.

ASHRAE, *Cooling and Heating Load Calculation Principles*, 1998.

ASHRAE, *Handbook of Fundamentals*, 2001.

ASHRAE 55, *Thermal Environmental Conditions for Human Occupancy*, 1992.

ASHRAE 62, *Ventilation for Acceptable Indoor Air Quality*, 2001.

ASHRAE/IESNA 90.1, *Energy Standard for Buildings Except Low Rise Residential Buildings*, 2004.

ASHRAE 90.2, *Energy-Efficient Design of Low-Rise Residential Buildings*, 2004.

ANSI/ASHRAE 94.2, *Method for Testing Thermal Storage Devices with Electrical Input and Thermal Output Based on Thermal Performance*, 1981 (RA 96).

ANSI/ASHRAE 15, *Safety Standard for Refrigeration Systems*, 2004.

Copyright National Fire Protection Association
Provided by IHS under license with NFPA
No reproduction or networking permitted without license from IHS
Not for Resale

2.3.14 ASME Publications. American Society of Mechanical Engineers, Three Park Avenue, New York, NY 10016-5990.

ASME A17.1, *Safety Code for Elevators and Escalators*, 2004, including Addenda ASME A17.1a-2005 and Supplement A17.1s-2005.

ASME A18.1, *Safety Standard for Platform Lifts and Stairway Chairlifts*, 2003.

ASME B20.1, *Safety Standard for Conveyors and Related Equipment*, 2003.

ASME B31.3, *Process Piping*, 2002.

2.3.15 ASTM Publications. American Society for Testing and Materials, 100 Barr Harbor Drive, West Conshohocken, PA 19428-2959.

ASTM A 153/A 153M, *Standard Specification for Zinc Coating (Hot-Dip) on Iron and Steel Hardware*, 2004.

ASTM A 463/A 463 M, *Standard Specification for Steel Sheet, Aluminum-Coated, by the Hot-Dip Process,* 2002a.

ASTM A 653/A 653M, *Standard Specification for Steel Sheet, Zinc-Coated (Galvanized) or Zinc-Iron Alloy-Coated (Galvannealed) by the Hot-Dip Process*, 2004a.

ASTM A 706/A 706M, *Standard Specification for Low-Alloy Steel Deformed and Plain Bars for Concrete Reinforcement*, 2004b.

ASTM A 755/A 755M, *Standard Specification for Steel Sheet, Metallic Coated by the Hot-Dip Process and Prepainted by the Coil-Coating Process for Exterior Exposed Building Products,* 2003.

ASTM A 792/A 792M, *Standard Specification for Steel Sheet, 55% Aluminum-Zinc Alloy-Coated by the Hot-Dip Process*, 2003.

ASTM A 875/A 875M, *Standard Specification for Steel Sheet, Zinc-5% Aluminum Alloy-Coated by the Hot-Dip Process*, 2002a.

ASTM A 924/A 924M, *Standard Specification for General Requirements for Steel Sheet, Metallic-Coated by the Hot-Dip Process,* 2004.

ASTM B 101, *Standard Specification for Lead-Coated Copper Sheet and Strip for Building Construction*, 2002.

ASTM B 209, *Standard Specification for Aluminum and Aluminum-Alloy Sheet and Plate,* 2004.

ASTM C 28/C 28M, *Standard Specification for Gypsum Plasters*, 2000e1.

ASTM C 35, *Standard Specification for Inorganic Aggregates for Use in Gypsum Plaster*, 2001.

ASTM C 59/C 59M, *Standard Specification for Gypsum Casting Plaster and Gypsum Molding Plaster*, 2000.

ASTM C 61/C 61M, *Standard Specification for Gypsum Keenes Cement*, 2000.

ASTM C 90, *Standard Specification for Loadbearing Concrete Masonry Units*, 2003.

ASTM C 91, *Standard Specification for Masonry Cement*, 2003a.

ASTM C 150, *Standard Specification for Portland Cement*, 2004a.

ASTM C 206, *Standard Specification for Finishing Hydrated Lime*, 2003.

ASTM C 208, *Standard Specification for Cellulosic Fiber Insulating Board*, 1995 (2001).

ASTM C 317/C 317M, *Standard Specification for Gypsum Concrete,* 2000.

ASTM C 406, *Standard Specification for Roofing Slate*, 2000.

ASTM C 472, *Standard Test Methods for Physical Testing of Gypsum, Gypsum Plasters and Gypsum Concrete,* 1999 (2004).

ASTM C 475/C 475M, *Standard Specification for Joint Compound and Joint Tape for Finishing Gypsum Board*, 2002.

ASTM C 476, *Standard Specification for Grout for Masonry*, 2002.

ASTM C 514, *Standard Specification for Nails for the Application of Gypsum Board*, 2001.

ASTM C 552, *Standard Specification for Cellular Glass Thermal Insulation*, 2003.

ASTM C 557, *Standard Specification for Adhesives for Fastening Gypsum Wallboard to Wood Framing*, 2003.

ASTM C 578, *Standard Specification for Rigid, Cellular Polystyrene Thermal Insulation*, 2004.

ASTM C 587, *Standard Specification for Gypsum Veneer Plaster*, 2002.

ASTM C 588/C 588M, *Standard Specification for Gypsum Base for Veneer Plasters*, 2003e1.

ASTM C 591, *Standard Specification for Unfaced Preformed Rigid Cellular Polyisocyanurate Thermal Insulation*, 2001.

ASTM C 595, *Standard Specification for Blended Hydraulic Cements*, 2003.

ASTM C 631, *Standard Specification for Bonding Compounds for Interior Gypsum Plastering,* 1995a (2004).

ASTM C 645, *Standard Specification for Nonstructural Steel Framing Members*, 2004a.

ASTM C 726, *Standard Specification for Mineral Fiber Roof Insulation Board*, 2000a.

ASTM C 728, *Standard Specification for Perlite Thermal Insulation Board*, 1997 e1.

ASTM C 836, *Standard Specification for High Solids Content, Cold Liquid-Applied Elastomeric Waterproofing Membrane for Use with Separate Wearing Course*, 2003.

ASTM C 840, *Standard Specification for Application and Finishing of Gypsum Board*, 2004.

ASTM C 841, *Standard Specification for Installation of Interior Lathing and Furring,* 2003.

ASTM C 842, *Standard Specification for Application of Interior Gypsum Plaster*, 1999.

ASTM C 843, *Standard Specification for Application of Gypsum Veneer Plaster*, 1999 e1.

ASTM C 844, *Standard Specification for Application of Gypsum Base to Receive Gypsum Veneer Plaster,* 2004.

ASTM C 847, *Standard Specification for Metal Lath,* 1995 (2000).

ASTM C 887, *Standard Specification for Packaged, Dry, Combined Materials for Surface Bonding Mortar*, 1979a (2001).

ASTM C 897, *Standard Specification for Aggregate for Job-Mixed Portland Cement-Based Plasters*, 2000.

Copyright National Fire Protection Association
Provided by IHS under license with NFPA
No reproduction or networking permitted without license from IHS
Not for Resale

ASTM C 926, *Standard Specification for Application of Portland Cement-Based Plaster*, 1998a.

ASTM C 932, *Standard Specification for Surface-Applied Bonding Compounds for Exterior Plastering*, 2003.

ASTM C 933, *Standard Specification for Welded Wire Lath*, 2004.

ASTM C 946, *Standard Practice for Construction of Dry-Stacked, Surface-Bonded Walls*, 1991 (2001).

ASTM C 954, *Standard Specification for Steel Drill Screws for the Application of Gypsum Panel Products or Metal Plaster Bases to Steel Studs from 0.033 in. (0.84 mm) to 0.112 in. (2.84 mm) in Thickness*, 2004.

ASTM C 955, *Standard Specification for Load-Bearing (Transverse and Axial) Steel Studs, Runners (Tracks), and Bracing or Bridging for Screw Application of Gypsum Panel Products and Metal Plaster Bases*, 2003.

ASTM C 956, *Standard Specification for Installation of Cast-in-Place Reinforced Gypsum Concrete*, 2004.

ASTM C 957, *Standard Specification for High-Solids Content, Cold Liquid-Applied Elastomeric Waterproofing Membrane with Integral Wearing Surface*, 2004.

ASTM C 1002, *Standard Specification for Steel Self-Piercing Tapping Screws for the Application of Gypsum Panel Products or Metal Plaster Bases to Wood Studs or Steel Studs*, 2004.

ASTM C 1029, *Standard Specification for Spray-Applied Rigid Cellular Polyurethane Thermal Insulation*, 2002.

ASTM C 1032, *Standard Specification for Woven Wire Plaster Base*, 2004.

ASTM C 1047, *Standard Specification for Accessories for Gypsum Wallboard and Gypsum Veneer Base*, 1999 (2004).

ASTM C 1063, *Standard Specification for Installation of Lathing and Furring to Receive Interior and Exterior Portland Cement-Based Plaster*, 2003.

ASTM C 1167, *Standard Specification for Clay Roof Tiles*, 2003.

ASTM C 1177/C 1177M, *Standard Specification for Glass Mat Gypsum Substrate for Use as Sheathing*, 2004 e1.

ASTM C 1178/C 1178M, *Standard Specification for Glass Mat Water-Resistant Gypsum Backing Panel*, 2004 e1.

ASTM C 1278/C 1278M, *Standard Specification for Fiber-Reinforced Gypsum Panel*, 2003 e1.

ASTM C 1280, *Standard Specification for Application of Gypsum Sheathing*, 2004.

ASTM C 1289, *Standard Specification for Faced Rigid Cellular Polyisocyanurate Thermal Insulation Board*, 2003.

ASTM C 1328, *Standard Specification for Plastic (Stucco) Cement*, 2003a.

ASTM C 1396/C 1396M, *Standard Specification for Gypsum Board*, 2004.

ASTM C 1491, *Standard Specification for Concrete Roof Pavers*, 2003.

ASTM C 1492, *Standard Specification for Concrete Roof Tile*, 2003.

ASTM D 25, *Standard Specification for Round Timber Piles*, 1999 e1.

ASTM D 41, *Standard Specification for Asphalt Primer Used in Roofing, Dampproofing, and Waterproofing*, 1994 (2000) e1.

ASTM D 43, *Standard Specification for Coal Tar Primer Used in Roofing, Dampproofing, and Waterproofing*, 2000.

ASTM D 56, *Standard Test Method for Flash Point by Tag Closed Tester*, 2001.

ASTM D 86, *Standard Test Method for Distillation of Petroleum Products at Atmospheric Pressure*, 2000.

ASTM D 93, *Standard Test Methods for Flash-Point by Pensky-Martens Closed Cup Tester*, 2000.

ASTM D 225, *Standard Specification for Asphalt Shingles (Organic Felt) Surfaced with Mineral Granules*, 2004.

ASTM D 226, *Standard Specification for Asphalt-Saturated Organic Felt Used in Roofing and Waterproofing*, 1997a.

ASTM D 227, *Standard Specification for Coal-Tar-Saturated Organic Felt Used in Roofing and Waterproofing*, 2003.

ASTM D 312, *Standard Specification for Asphalt Used in Roofing*, 2000.

ASTM D 450, *Standard Specification for Coal-Tar Pitch Used in Roofing, Damproofing, and Waterproofing*, 1996 (2000) e1.

ASTM D 635, *Standard Test Method for Rate of Burning and/or Extent and Time of Burning of Plastics in a Horizontal Position*, 2003.

ASTM D 1079, *Standard Terminology Relating to Roofing, Waterproofing, and Bituminous Materials*, 2002.

ASTM D 1143, *Standard Test Method for Piles Under Static Axial Compressive Load*, 1981 (1994) e1.

ASTM D 1227, *Standard Specification for Emulsified Asphalt Used as a Protective Coating for Roofing*, 1995 (2000).

ASTM D 1761, *Standard Test Methods for Mechanical Fasteners in Wood*, 1988 (2000) e1.

ASTM D 1863, *Standard Specification for Mineral Aggregate Used on Built-Up Roofs*, 2003.

ASTM D 1929, *Standard Test Method for Determining Ignition Temperature of Plastics*, 1996 (2001) e1.

ASTM D 1970, *Standard Specification for Self-Adhering Polymer Modified Bituminous Sheet Materials Used as Steep Roofing Underlayment for Ice Dam Protection*, 2001.

ASTM D 2178, *Standard Specification for Asphalt Glass Felt Used in Roofing and Waterproofing*, 2004.

ASTM D 2487, *Standard Classification of Soils for Engineering Purposes (Unified Soil Classification System)*, 2000.

ASTM D 2626, *Standard Specification for Asphalt-Saturated and Coated Organic Felt Base Sheet Used in Roofing*, 2004.

ASTM D 2823, *Standard Specification for Asphalt Roof Coatings*, 1990 (1997) e1.

ASTM D 2843, *Standard Test Method for Density of Smoke from the Burning or Decomposition of Plastics*, 1999 (2004).

ASTM D 2859, *Standard Test Method for Ignition Characteristics of Finished Textile Floor Covering Materials*, 2004.

Copyright National Fire Protection Association
Provided by IHS under license with NFPA
No reproduction or networking permitted without license from IHS
Not for Resale

ASTM D 2898, *Standard Test Methods for Accelerated Weathering of Fire-Retardant-Treated Wood for Fire Testing*, 1994 (2004).

ASTM D 3019, *Standard Specification for Lap Cement Used with Asphalt Roll Roofing, Non Fibered, Asbestos Fibered, and Non Asbestos Fibered*, 1994 (2000) e1.

ASTM D 3161, *Standard Test Method for Wind-Resistance of Asphalt Shingles (Fan-Induced Method)*, 2003b.

ASTM D 3201, *Standard Test Method for Hygroscopic Properties of Fire-Retardant Wood and Wood-Base Products*, 1994 (2003).

ASTM D 3278, *Standard Test Methods for Flash Point of Liquids by Small Scale Closed-Cup Apparatus,* 1996.

ASTM D 3462, *Standard Specification for Asphalt Shingles Made from Glass Felt and Surfaced with Mineral Granules*, 2004.

ASTM D 3468, *Standard Specification for Liquid-Applied Neoprene and Chlorosulfonated Polyethylene Used in Roofing and Waterproofing*, 1999.

ASTM D 3737, *Standard Practice for Establishing Allowable Properties for Structural Glued Laminated Timber (Glulam)*, 2003.

ASTM D 3746, *Standard Test Method for Impact Resistance of Bituminous Roofing Systems*, 1985 (2002).

ASTM D 3747, *Standard Specification for Emulsified Asphalt Adhesive for Adhering Roof Insulation*, 1979 (2000) e1.

ASTM D 3828, *Standard Test Methods for Flash Point by Small Scale Closed Tester,* 1998.

ASTM D 3909, *Standard Specification for Asphalt Roll Roofing (Glass Felt) Surfaced with Mineral Granules*, 1997b.

ASTM D 4022, *Standard Specification for Coal Tar Roof Cement, Asbestos Containing*, 1994 (2000) e1.

ASTM D 4318, *Standard Test Methods for Liquid Limit, Plastic Limit, and Plasticity Index of Soils*, 2000.

ASTM D 4434, *Standard Specification for Poly (Vinyl Chloride) Sheet Roofing*, 2004.

ASTM D 4479, *Standard Specification for Asphalt Roof Coatings — Asbestos-Free,* 2000.

ASTM D 4586, *Standard Specification for Asphalt Roof Cement, Asbestos-Free*, 2000.

ASTM D 4601, *Standard Specification for Asphalt-Coated Glass Fiber Base Sheet Used in Roofing*, 1998.

ASTM D 4637, *Standard Specification for EPDM Sheet Used in a Single-Ply Roof Membrane*, 2004.

ASTM D 4869, *Standard Specification for Asphalt-Saturated Organic Felt Underlayment Used in Steep Slope Roofing,* 2004.

ASTM D 4897, *Standard Specification for Asphalt-Coated Glass-Fiber Venting Base Sheet Used in Roofing*, 2001.

ASTM D 4990, *Standard Specification for Coal Tar Glass Felt Used in Roofing and Waterproofing*, 1997a.

ASTM D 5019, *Standard Specification for Reinforced Non-Vulcanized Polymeric Sheet Used in Roofing Membrane,* 1996 e1.

ASTM D 5055, *Standard Specification for Establishing and Monitoring Structural Capacities of Prefabricated Wood I-Joists*, 2004.

ASTM D 5456, *Standard Specification for Evaluation of Structural Composite Lumber Products*, 2003.

ASTM D 5516, *Standard Test Method for Evaluating the Flexural Properties of Fire-Retardant Treated Softwood Plywood Exposed to Elevated Temperatures*, 2003.

ASTM D 5643, *Standard Specification for Coal Tar Roof Cement, Asbestos Free*, 1994 (2000) e1.

ASTM D 5664, *Standard Test Method for Evaluating the Effects of Fire-Retardant Treatments and Elevated Temperatures on Strength Properties of Fire-Retardant Treated Lumber*, 2002.

ASTM D 5665, *Standard Specification for Thermoplastic Fabrics Used in Cold-Applied Roofing and Waterproofing*, 1999a.

ASTM D 5726, *Standard Specification for Thermoplastic Fabrics Used in Hot-Applied Roofing and Waterproofing*, 1998.

ASTM D 6083, *Standard Specification for Liquid Applied Acrylic Coating Used in Roofing*, 1997a.

ASTM D 6162, *Standard Specification for Styrene Butadiene Styrene (SBS) Modified Bituminous Sheet Materials Using a Combination of Polyester and Glass Fiber Reinforcements,* 2000a.

ASTM D 6163, *Standard Specification for Styrene Butadiene Styrene (SBS) Modified Bituminous Sheet Materials Using Glass Fiber Reinforcements,* 2000 e1.

ASTM D 6164, *Standard Specification for Styrene Butadiene Styrene (SBS) Modified Bituminous Sheet Materials Using Polyester Reinforcements,* 2000.

ASTM D 6222, *Standard Specification for Atactic Polypropylene (APP) Modified Bituminous Sheet Materials Using Polyester Reinforcements,* 2002.

ASTM D 6223, *Standard Specification for Atactic Polypropylene (APP) Modified Bituminous Sheet Materials Using a Combination of Polyester and Glass Fiber Reinforcements,* 2002.

ASTM D 6298, *Standard Specification for Fiberglass Reinforced Styrene-Butadiene-Styrene (SBS) Modified Bituminous Sheet with a Factory Applied Metal Surface,* 2000.

ASTM D 6305, *Standard Practice for Calculating Bending Strength Design Adjustment Factors for Fire-Retardant-Treated Plywood Roof Sheathing*, 2002 e1.

ASTM D 6380, *Standard Specification for Asphalt Roll Roofing (Organic Felt),* 2003.

ASTM D 6381, *Standard Test Method for Measurement of Asphalt Shingle Mechanical Uplift Resistance*, 2003b.

ASTM D 6694, *Standard Specification for Liquid-Applied Silicone Coating Used in Spray Polyurethane Foam Roofing,* 2001.

ASTM D 6754, *Standard Specification for Ketone Ethylene Ester Based Sheet Roofing,* 2002.

ASTM D 6757, *Standard Specification for Steep-Slope Underlayment Felt Containing Inorganic Fibers,* 2004.

ASTM D 6841, *Standard Practice for Calculating Design Valve Treatment Adjustment Factors for Fire-Retardant-Treated Lumber,* 2003.

ASTM D 6878, *Standard Specification for Thermoplastic Polyolefin Based Sheet Roofing,* 2003.

ASTM E 84, *Standard Test Method for Surface Burning Characteristics of Building Materials*, 2004.

ASTM E 90, *Standard Test Method for Laboratory Measurement of Airborne Sound Transmission Loss of Building Partitions and Elements*, 1999.

Copyright National Fire Protection Association
Provided by IHS under license with NFPA
No reproduction or networking permitted without license from IHS
Not for Resale

ASTM E 96, *Standard Test Methods for Water Vapor Transmission of Materials*, 2000.

ASTM E 108, *Standard Test Methods for Fire Tests of Roof Coverings,* 2004.

ASTM E 119, *Standard Test Methods for Fire Tests of Building Construction and Materials,* 2000a.

ASTM E 136, *Standard Test Method for Behavior of Materials in a Vertical Tube Furnace at 750°C,* 2004.

ASTM E 283, *Standard Test Method for Determining the Rate of Air Leakage Through Exterior Windows, Curtain Walls, and Doors Under Specified Pressure Differences Across the Specimen*, 1991.

ASTM E 492, *Standard Test Method for Laboratory Measurement of Impact Sound Transmission Through Floor-Ceiling Assemblies Using the Tapping Machine*, 1996.

ASTM E 605, *Standard Test Methods for Thickness and Density of Sprayed Fire-Resistive Material (SFRM) Applied to Structural Members,* 1993 (2000).

ASTM E 648, *Standard Test Method for Critical Radiant Flux of Floor-Covering Systems Using a Radiant Heat Energy Source,* 2003.

ASTM E 736, *Standard Test Method for Cohesion/Adhesion of Sprayed Fire-Resistive Materials Applied to Structural Members,* 2000.

ASTM E 814, *Standard Test Method for Fire Tests of Through-Penetration Fire Stops*, 2002.

ASTM E 970, *Standard Test Method for Critical Radiant Flux of Exposed Attic Floor Insulation Using a Radiant Heat Energy Source,* 2000.

ASTM E 1300, *Standard Practice for Determining Load Resistance of Glass in Buildings*, 2004e1.

ASTM E 1352, *Standard Test Method for Cigarette Ignition Resistance of Mock-Up Upholstered Furniture Assemblies*, 2002.

ASTM E 1353, *Standard Test Methods for Cigarette Ignition Resistance of Components of Upholstered Furniture*, 2002.

ASTM E 1537, *Standard Test Method for Fire Testing of Upholstered Furniture*, 2002a.

ASTM E 1590, *Standard Test Method for Fire Testing of Mattresses* , 2002.

ASTM E 1591, *Standard Guide for Obtaining Data for Deterministic Fire Models*, 2000.

ASTM E 1592, *Standard Test Method for Structural Performance of Sheet Metal Roof and Siding Systems by Uniform Static Air Pressure Difference,* 2001.

ASTM E 1602, *Standard Guide for Construction of Solid Fuel Burning Masonry Heaters*, 2003.

ASTM E 1966, *Standard Test Method for Fire-Resistive Joint Systems*, 2001.

ASTM E 2174, *Standard Practice for On-Site Inspection of Installed Fire Stops*, 2001.

ASTM E 2393, *Standard Practice for On-Site Inspection of Installed Fire Resistive Joint Systems and Perimeter Fire Barriers*, 2004.

ASTM F 547, *Standard Terminology of Nails for Use with Wood and Wood-Base Materials,* 2001.

ASTM F 851, *Standard Test Method for Self-Rising Seat Mechanisms*, 1987 (2000).

ASTM F 1292, *Standard Specification for Impact Attenuation of Surface Systems Under and Around Playground Equipment*, 1999.

ASTM F 1292, *Standard Specification for Impact Attenuation of Surfacing Materials Within the Use Zone of Playground Equipment,* 2004.

ASTM F 1487, *Standard Consumer Safety Performance Specification for Playground Equipment for Public Use*, 2001.

ASTM F 1577, *Standard Test Methods for Detention Locks for Swinging Doors*, 2001.

ASTM F 1667, *Standard Specification for Driven Fasteners: Nails, Spikes, and Staples*, 2003.

ASTM F 1951, *Standard Specification for Determination of Accessibility of Surface Systems Under and Around Playground Equipment,* 1999.

ASTM G 155, *Standard Practice for Operating Xenon Arc Light Apparatus for Exposure of Non-Metallic Materials*, 2000ae1.

2.3.16 AWPA Publications. American Wood Preservers Association, P.O. Box 388, Selma, AL 36702-0388.

C1, *Standard for Preservative Treatment of All Timber Products by Pressure Processes,* 2003.

C2, *Standard for the Preservative Treatment of Lumber, Timber, Bridge Ties, and Mine Ties by Pressure Processes,* 2002.

C3, *Piles — Preservative Treatment by Pressure Processes,* 2003.

C4, *Poles — Preservative Treatment by Pressure Processes,* 2003.

C9, *Plywood — Preservative Treatment by Pressure Processes,* 2003.

C14, *Wood for Highway Construction — Preservative Treatment by Pressure Processes,* 2003.

C15, *Wood for Commercial-Residential Construction Preservative Treatment by Pressure Processes,* 2003.

C16, *Wood Used on Farms — Preservative Treatment by Pressure Processes,* 2003.

C22, *Lumber and Plywood for Permanent Wood Foundations — Preservative Treatment by Pressure Processes,* 2003.

C23, *Round Poles and Posts Used in Building Construction — Preservative Treatment by Pressure Processes,* 2003.

C24, *Sawn Timber Piles Used for Residential and Commercial Building,* 2003.

C28, *Standard for Preservative Treatment of Structural Glued Laminated Members and Lamination Before Gluing of Southern Pine, Coastal Douglas Fir, Hemfir, and Western Hemlock by Pressure Processes,* 2003.

C31, *Lumber Used Out of Contact with the Ground and Continuously Protected from Liquid Water—Treatment by Pressure Processes,* 2002.

C33, *Standard for Preservative Treatment of Structural Composite Lumber by Pressure Processes,* 2003.

M4, *Standard for the Care of Preservative-Treated Wood Products,* 2002.

P1/P13, *Standard for Creosote Preservative,* 2001.

P2, *Standard for Creosote Solutions,* 2001.

P5, *Standard for Waterborne Preservatives,* 2004.

P8, *Standard for Oil-borne Preservatives,* 2004.

P9, *Standards for Solvents and Formulations for Organic Preservative Systems,* 2003.

Copyright National Fire Protection Association
Provided by IHS under license with NFPA
No reproduction or networking permitted without license from IHS
Not for Resale

2.3.17 BHMA Publication. Builders Hardware Manufacturers Association, 355 Lexington Avenue, 17th floor, New York, NY 10017-6603.

BHMA/ANSI A156.19, *American National Standard for Power Assist and Low Energy Power Operated Doors*, 2002.

2.3.18 CGSB Publications. Canadian General Standards Board, CGSB Sales Centre, 11 Laurier St., Gatineau, PQ, Canada K1A 1G6.

37-GP-52M, *Roofing and Waterproofing Membrane, Sheet Applied, Elastomeric,* 1984.

37-GP-56M, *Membrane, Modified, Bituminous, Prefabricated, and Reinforced for Roofing,* 1985.

CAN/CGSB-37.54, *Polyvinyl Chloride Roofing and Waterproofing Membrane,* 1995.

2.3.19 Composite Panel Association Publications. Composite Panel Association, Composite Wood Council, 18922 Premiere Court, Gaithersburg, MD 20879-1574.

ANSI/AHA A135.4, *Basic Hardboard,* 2004.

ANSI/AHA A135.5, *Prefinished Hardboard Paneling*, 2004.

ANSI/AHA A135.6, *Hardboard Siding,* 1998.

2.3.20 DASMA Publication. Door and Access Systems Manufacturers Association, International, 1300 Summer Avenue, Cleveland, OH 44115-2851.

ANSI/DASMA 107, *Room Fire Test Standard for Garage Doors Using Foam Plastic Insulation,* 1997.

2.3.21 EIMA Publication. EIFS Industry Members Association, 3000 Corporate Center Drive, Suite 270, Morrow, GA 30260.

ANSI/EIMA 99A, *Exterior Insulation and Finish Systems (EIFS),* 2001.

2.3.22 FM Global Publications. FM Global, 1301 Atwood Avenue, P.O. Box 7500, Johnston, RI 02919.

FM 4411, *Insulated Wall Constructions,* 1974.

FM 4435, *Approval Standard for Roof Perimeter Flashing,* 2004.

FM 4450, *Approval Standard for Class I Insulated Steel Deck Roofs,* 1989.

FM 4470, *Approval Standard for Class I Roof Covers,* 1986.

FM 4471, *Approval Standard for Class 1 Panel Roofs,* 1995.

FM 4473, *Test Standard for Specification Test Protocol for Impact Resistance Testing of Rigid Roofing Materials by Impacting with Freezer Ice Balls,* 2000.

FM 4880, *Approval Standard for Class 1 Insulated Wall or Wall & Roof/Ceiling Panels; Plastic Interior Finish Materials; Plastic Exterior Building Panels; Wall/Ceiling Coating Systems; Interior or Exterior Finish Systems*, 1994.

2.3.23 FRSA/ RTI Publication. Florida Roofing, Sheet Metal and Air Conditioning Contractors Association, 4111 Metric Drive, Suite 6, Winter Park, FL 32792.

07320/1, *Concrete and Clay Roof Tile Installation Manual,* third edition, 1998 with June 2001 Addendum.

2.3.24 GA Publications. Gypsum Association, 810 First Street, NE, #510, Washington, DC 20002.

GA-216, *Application and Finishing of Gypsum Panel Products,* 2004.

GA-600, *Fire Resistance Design Manual,* 2003.

2.3.25 HPVA Publication. Hardwood Plywood and Veneer Association, P.O. Box 2789, Reston, VA 20195.

ANSI/HPVA HP-1, *American National Standard for Hardwood and Decorative Plywood,* 2004.

2.3.26 IAPMO Publications. International Association of Plumbing and Mechanical Officials, 20001 Walnut Drive South, Walnut, CA 91789.

UMC, *Uniform Mechanical Code,* 2003.

UPC, *Uniform Plumbing Code,* 2003.

2.3.27 ICC Publications. International Code Council, 5203 Leesburg Pike, Suite 600, Falls Church, VA 22041.

ICC/ANSI A117.1, *American National Standard for Accessible and Usable Buildings and Facilities*, 2003.

SSTD-10, *Standard for Hurricane-Resistant Construction,* 1999.

IRC, *International Residential Code*, 2003.

2.3.28 NAAMM Publication. National Association of Architectural Metal Manufacturers, 8 South Michigan Avenue, Suite 1000, Chicago, IL 60603.

ANSI/NAAMM FP 1001, *Guide Specifications for Design of Metal Flagpoles Manual,* 1997.

2.3.29 NCMA Publication. National Concrete Masonry Association, 13750 Sunrise Valley Drive, Herndon, VA 20171.

Design Manual for Segmental Retaining Walls, 2000.

2.3.30 NFRC Publications. National Fenestration Rating Council, 1300 Spoons Street, Suite 500, Silver Spring, MD 20910.

NFRC 100, *Procedure for Determining Fenestration Product U-factors*, 1997.

NFRC 200, *Procedure for Determining Fenestration Product Solar Heat Gain Coefficients at Nominal Incidence*, 2002.

2.3.31 NWWDA Publications. National Wood Window and Door Association, 1400 East Touhy Avenue, Des Plaines, IL 60018.

ANSI/NWWDA IS-2, *Industry Standard for Wood Window Units*, 1987.

ANSI/NWWDA IS-3, *Industry Standard for Wood Sliding Patio Doors*, 1998.

2.3.32 PCA Publication. Portland Cement Association, 5420 Old Orchard Road, Skokie, IL 60077-1083.

PCA EB118, *Prescriptive Method for Insulating Concrete Forms in Residential Construction*, second edition (revised), December 2002.

2.3.33 PTI Publication. Post-Tensioning Institute, 8601 North Black Canyon Highway, Suite 103, Phoenix, AZ 85021.

Design and Construction of Post-Tensioned Slabs-on-Ground, 3rd edition, 2004.

Copyright National Fire Protection Association
Provided by IHS under license with NFPA
No reproduction or networking permitted without license from IHS
Not for Resale

2.3.34 RMI Publication. Rack Manufacturers Institute, 8720 Red Oak Boulevard, Suite 201, Charlotte, NC 28217.

RMI, *Specification for the Design, Testing and Utilization of Industrial Steel Storage Racks*, 2002.

2.3.35 SJI Publications. Steel Joist Institute, 3127 Mr. Joe White Avenue, Myrtle Beach, SC 29577-6760.

Standard Specifications for Joist Girders, 2005.

Standard Specifications, Load Tables and Weight Tables for Steel Joists and Joist Girders, 2005.

Standard Specifications for Longspan Steel Joists, LH Series and Deep Longspan Steel Joists, DLH Series, 2005.

Standard Specifications for Open Web Steel Joists, K Series, 2005.

2.3.36 SPC Publication. Southern Pine Council, P.O. Box 641700, Kenner, LA 70064-1700.

Permanent Wood Foundations: Design & Construction Guide, 2000.

2.3.37 SPRI Publications. SPRI, 77 Rumford Avenue, Suite 3B, Waltham, MA 02453.

ANSI/SPRI ES-1, *Wind Design Guide for Edge Systems Used with Low Slope Roofing Systems,* 2003.

ANSI/SPRI RP-4, *Wind Design Standard for Ballasted Single-Ply Roofing Systems,* 2002.

2.3.38 TIA Publication. Telecommunications Industry Association, 2500 Wilson Boulevard, Suite 300, Arlington, VA 22201.

ANSI/TIA/EIA-222-F, *Structural Standards for Steel Antenna Towers and Antenna Structures,* 1996 (R2003).

2.3.39 TPI Publication. Truss Plate Institute, Inc., 583 D'Onofrio Drive, Suite 200, Madison, WI 53719.

ANSI/TPI 1, *National Design Standard for Metal Plate Connected Wood Truss Construction,* 2002.

2.3.40 UL Publications. Underwriters Laboratories Inc., 333 Pfingsten Road, Northbrook, IL 60062-2096.

ANSI/UL 10C, *Standard for Positive Pressure Fire Tests of Door Assemblies* , 2001.

UL 217, *Standard for Single and Multiple Station Smoke Alarms*, 2004.

ANSI/UL 263, *Standard for Fire Tests of Building Construction and Materials,* 2003.

ANSI/UL 555, *Standard for Fire Dampers,* 1999, Revised 2002.

UL 555C, *Standard for Ceiling Dampers,* 1996.

UL 555S, *Standard for Smoke Dampers,* 1999, Revised 2003.

UL 580, *Standard for Tests for Uplift Resistance of Roof Assemblies,* 1994, Revised 1998.

ANSI/UL 723, *Standard for Test for Surface Burning Characteristics of Building Materials*, 2003.

ANSI/UL 790, *Standard for Standard Test Methods for Fire Tests of Roof Coverings,* 2004.

UL 924, *Standard for Emergency Lighting and Power Equipment,* 1995, Revised 2001.

ANSI/UL 1040, *Standard for Fire Test of Insulated Wall Construction,* 1996, Revised 2001.

ANSI/UL 1256, *Standard for Fire Test of Roof Deck Constructions,* 2002.

UL 1286, *Standard for Office Furnishings,* 2004.

ANSI/UL 1479, *Standard for Fire Tests of Through-Penetration Firestops,* 2003.

ANSI/UL 1715, *Standard for Fire Test of Interior Finish Material,* 2004.

UL 1784, *Standard for Air Leakage Tests of Door Assemblies,* 2001.

ANSI/UL 1820, *Standard for Fire Test of Pneumatic Tubing for Flame and Smoke Characteristics,* 1999.

ANSI/UL 1887, *Standard for Fire Test of Plastic Sprinkler Pipe for Visible Flame and Smoke Characteristics,* 1999.

ANSI/UL 1897, *Standard for Uplift Tests for Roof Covering Systems,* 2004.

UL 1975, *Standard for Fire Tests for Foamed Plastics Used for Decorative Purposes,* 1996.

UL 2024, *Standard for Optical Fiber Cable Raceway,* 2002.

UL 2043, *Standard for Fire Test for Heat and Visible Smoke Release for Discrete Products and Their Accessories Installed in Air-Handling Spaces,* 2001.

ANSI/UL 2079, *Standard for Tests for Fire Resistance of Building Joint Systems,* 2004.

UL 2218, *Standard for Impact Resistance of Prepared Roof Covering Materials,* 2002.

ANSI/UL 2390, *Standard for Tests for Wind Resistant Asphalt Shingles with Sealed Tabs*, 2004.

CAN/ULC S102.2, *Standard Method of Test for Surface Burning Characteristics of Floor Coverings and Miscellaneous Materials and Assemblies,* 2003.

2.3.41 U.S. Government Publications. U.S. Government Printing Office, Washington, DC 20402.

Federal Specification UUB-790a, *Specification for Building Paper, Vegetable Fiber: Kraft, Waterproofed, Water Repellent, and Fiber Resistant,* 1992.

FEMA 356, *Prestandard and Commentary for the Seismic Rehabilitation of Buildings*, 2000.

Public Law 100-12, 42 U.S.C. 6295, *National Appliance Energy Conservation Act of 1987.*

Title 10, Code of Federal Regulations, 430, *Test Procedure and Certification and Enforcement Requirements for Plumbing Products and Residential Appliances.*

Title 28, Code of Federal Regulations, 36, Americans with Disabilities Act Accessibility Guidelines (ADAAG).

Title 40, *Code of Federal Regulations*, 18, *Transportation, Manufacture, Distribution, and Storage of Explosive Materials.*

USDOC PS 1, *U.S. Product Standard for Construction and Industrial Plywood*, 1995.

USDOC PS 2, *Performance Standard for Wood-based Structural-Use Panels,* 1992.

--`,,```,,,,````-`-`,,`,,`,`,,`---

Copyright National Fire Protection Association
Provided by IHS under license with NFPA
No reproduction or networking permitted without license from IHS

Not for Resale

USDOC PS 20, *American Softwood Lumber Standard,* 1999.

CPSC, 16 CFR 1201, *Safety Standard for Architectural Glazing Materials,* 1977.

CPSC, 16 CFR 1209, *Interim Safety Standard for Cellulose Insulation,* 1979.

CPSC, 16 CFR 1404, *Cellulose Insulation,* 1979.

2.3.42 WRI/CRSI Publication. Wire Reinforcement Institute, 301 East Sandusky Street, Findlay, OH 45839-0450.

Design of Slab-on-Ground Foundations, 1996.

2.4 References for Extracts in Mandatory Sections.

NFPA 1, *Uniform Fire Code™,* 2006 edition.

NFPA 13, *Standard for the Installation of Sprinkler Systems,* 2002 edition.

NFPA 14, *Standard for the Installation of Standpipe and Hose Systems,* 2003 edition.

NFPA 30, *Flammable and Combustible Liquids Code,* 2003 edition.

NFPA 30B, *Code for the Manufacture and Storage of Aerosol Products,* 2002 edition.

NFPA 32, *Standard for Drycleaning Plants,* 2004 edition.

NFPA 55, *Standard for the Storage, Use, and Handling of Compressed Gases and Cryogenic Fluids in Portable and Stationary Containers, Cylinders, and Tanks,* 2005 edition.

NFPA 58, *Liquefied Petroleum Gas Code,* 2004 edition.

NFPA 61, *Standard for the Prevention of Fires and Dust Explosions in Agricultural and Food Processing Facilities,* 2002 edition.

NFPA 68, *Guide for Venting of Deflagrations,* 2002 edition.

NFPA 72®, National Fire Alarm Code®, 2002 edition.

NFPA 80, *Standard for Fire Doors and Fire Windows,* 1999 edition.

NFPA 88A, *Standard for Parking Structures,* 2002 edition.

NFPA 90A, *Standard for the Installation of Air-Conditioning and Ventilating Systems,* 2002 edition.

NFPA 97, *Standard Glossary of Terms Relating to Chimneys, Vents, and Heat-Producing Appliances,* 2003 edition.

NFPA *101®, Life Safety Code®,* 2006 edition.

NFPA 101B, *Code for Means of Egress for Buildings and Structures,* 2002 edition.

NFPA 102, *Standard for Grandstands, Folding and Telescopic Seating, Tents, and Membrane Structures,* 1995 edition.

NFPA 140, *Standard on Motion Picture and Television Production Studio Soundstages and Approved Production Facilities,* 2004 edition.

NFPA 211, *Standard for Chimneys, Fireplaces, Vents, and Solid Fuel-Burning Appliances,* 2003 edition.

NFPA 221, *Standard for High Challenge Fire Walls, Fire Walls, and Fire Barrier Walls,* 2006 edition.

NFPA 252, *Standard Methods of Fire Tests of Door Assemblies,* 2003 edition.

NFPA 288, *Standard Methods of Fire Tests of Floor Fire Door Assemblies Installed Horizontally in Fire Resistance–Rated Floor Systems,* 2001 edition.

NFPA 301, *Code for Safety to Life from Fire on Merchant Vessels,* 2001 edition.

NFPA 307, *Standard for the Construction and Fire Protection of Marine Terminals, Piers, and Wharves,* 2006 edition.

NFPA 318, *Standard for the Protection of Semiconductor Fabrication Facilities,* 2006 edition.

NFPA 418, *Standard for Heliports,* 2001 edition.

NFPA 432, *Code for the Storage of Organic Peroxide Formulations,* 2002 edition.

NFPA 495, *Explosive Materials Code,* 2006 edition.

NFPA 501, *Standard on Manufactured Housing,* 2005 edition.

NFPA 654, *Standard for the Prevention of Fire and Dust Explosions from the Manufacturing, Processing, and Handling of Combustible Particulate Solids,* 2006 edition.

NFPA 909, *Code for the Protection of Cultural Resource Properties — Museums, Libraries, and Places of Worship,* 2005 edition.

NFPA 914, *Code for Fire Protection of Historic Structures,* 2001 edition.

NFPA 921, *Guide for Fire and Explosion Investigations,* 2004 edition.

NFPA 1124, *Code for the Manufacture, Transportation, Storage, and Retail Sales of Fireworks and Pyrotechnic Articles,* 2006 edition.

NFPA 1144, *Standard for Protection of Life and Property from Wildfire,* 2002 edition.

Chapter 3 Definitions

3.1 General. The definitions contained in this chapter shall apply to the terms used in this *Code*. Where terms are not included, common usage of the terms shall apply. The following terms, for the purposes of this *Code*, shall have the meanings given in this chapter, if not otherwise modified by another chapter. Words used in the present tense shall include the future; words used in the masculine gender shall include the feminine and neuter; the singular number shall include the plural, and the plural number shall include the singular. Where terms are not defined in this chapter or within another chapter, they shall be defined using their ordinarily accepted meanings within the context in which they are used. *Webster's Third New International Dictionary of the English Language, Unabridged*, shall be a source for ordinarily accepted meaning.

3.2 NFPA Official Definitions.

3.2.1* Approved. Acceptable to the authority having jurisdiction.

3.2.2* Authority Having Jurisdiction (AHJ). An organization, office, or individual responsible for enforcing the requirements of a code or standard, or for approving equipment, materials, an installation, or a procedure.

3.2.3* Code. A standard that is an extensive compilation of provisions covering broad subject matter or that is suitable for adoption into law independently of other codes and standards.

3.2.4 Labeled. Equipment or materials to which has been attached a label, symbol, or other identifying mark of an organization that is acceptable to the authority having jurisdiction and concerned with product evaluation, that maintains periodic inspection of production of labeled equipment or materials, and by whose labeling the manufacturer indicates compliance with appropriate standards or performance in a specified manner.

3.2.5* Listed. Equipment, materials, or services included in a list published by an organization that is acceptable to the authority having jurisdiction and concerned with evaluation of products or services, that maintains periodic inspection of production of listed equipment or materials or periodic evaluation of services, and whose listing states that either the equipment, material, or service meets appropriate designated standards or has been tested and found suitable for a specified purpose.

3.2.6 Shall. Indicates a mandatory requirement.

3.2.7 Should. Indicates a recommendation or that which is advised but not required.

--`,,```,,,,````-`-`,,`,,`,`,,`---

Copyright National Fire Protection Association
Provided by IHS under license with NFPA
No reproduction or networking permitted without license from IHS
Not for Resale

3.3 General Definitions.

3.3.1 Accessible (Accessibility). A site, building, facility, or portion thereof that complies with this *Code.*

3.3.2 Accessible Area of Refuge. See 3.3.34.1.

3.3.3 Accessible Means of Egress. See 3.3.391.1.

3.3.4 Accessible Route (Accessibility). A continuous unobstructed path that complies with this *Code* and ICC/ANSI A117.1.

3.3.5 Accessory Building. See 3.3.65.1.

3.3.6 Accreditation Body. An approved, third-party organization that is independent of the grading and inspection agencies, and the lumber mills, and that initially accredits and subsequently monitors, on a continuing basis, the competency and performance of a grading or inspection agency related to carrying out specific tasks.

3.3.7 Active Sub-Slab Depressurization System. See 3.3.608.4.1.

3.3.8 Actual Start of Construction (Flood Resistance). See 3.3.115.1.

3.3.9* Actuating Member or Bar. The activating mechanism of a panic hardware or fire exit hardware device located on the egress side of a door.

3.3.10 Addition. An increase in the building area, aggregate floor area, height, or number of stories of a structure. [**ASCE/SEI 7:**11.2]

3.3.11 Adjusted Shear Resistance. See 3.3.526.1.

3.3.12 Aerosol. A product that is dispensed from an aerosol container by a propellant. [**30B,** 2002]

3.3.13 Aerosol Container. See 3.3.119.1.

3.3.14 Inspection Agent. A qualified company or individual assigned to execute the tests and special inspections required by the quality assurance program.

3.3.15 Agricultural Building. See 3.3.65.2.

3.3.16 Agricultural Dust. See 3.3.170.1.

3.3.17 Aircraft Engine Test Facility. An integrated system of building(s), structure(s), space, and services used to test aircraft engines contained within a test cell or on a test stand.

3.3.18 Air-Inflated Structure. See 3.3.601.2.

3.3.19 Air-Right Structure. See 3.3.601.3.

3.3.20 Air-Supported Structure. See 3.3.601.4.

3.3.21* Aisle. An unenclosed path of travel that forms part of the exit access and provides an open and unobstructed path of egress travel to another aisle, a corridor, a vomitory, or an exit.

3.3.22* Aisle Accessway. The initial portion of an exit access that leads to an aisle. [***101,*** 2006]

3.3.23 Alarm.

3.3.23.1 ***Single Station Alarm.*** A detector comprising an assembly that incorporates a sensor, control components, and an alarm notification appliance in one unit operated from a power source either located in the unit or obtained at the point of installation. [***72,*** 2002]

3.3.23.2 ***Smoke Alarm.*** A single or multiple station alarm responsive to smoke. [***72,*** 2002]

3.3.24 Alley. Public space or thoroughfare less than 20 ft (6.1 m) wide, but not less than 10 ft (3 m) wide, that has been deeded or dedicated to the public for permanent public use.

3.3.25 Allowable Stress Design. See 3.3.146.1.

3.3.26 Alteration.

3.3.26.1 ***Alter/Alteration.*** A modification, replacement, or other physical change to an existing facility.

3.3.26.2* ***Alteration (Accessibility).*** A change to a building or facility that affects or could affect the accessibility of the building or facility or part thereof.

3.3.27 Alternative Calculation Procedure. A calculation procedure that differs from the procedure originally employed by the design team but that provides predictions for the same variables of interest. [***101,*** 2006]

3.3.28 Aluminum Composite Material (ACM). See 3.3.388.10, Metal Composite Material (MCM).

3.3.29 Ambulatory Health Care Occupancy. See 3.3.424.6.1.

3.3.30 Analysis.

3.3.30.1 ***Sensitivity Analysis.*** An analysis performed to determine the degree to which a predicted output will vary given a specified change in an input parameter, usually in relation to models.

3.3.30.2 ***Uncertainty Analysis.*** An analysis performed to determine the degree to which a predicted value will vary.

3.3.31 Anchor Building. See 3.3.65.3.

3.3.32 Apartment Building. See 3.3.65.4.

3.3.33 Area.

3.3.33.1 ***Assembly Area (Accessibility).*** For the purposes of this *Code,* a building or facility, or portion thereof, used for the purpose of entertainment, educational or civic gatherings, or similar purposes including, but not limited to, classrooms, lecture halls, courtrooms, public meeting rooms, public hearing rooms, legislative chambers, motion picture houses, auditoria, theaters, playhouses, dinner theaters, concert halls, centers for the performing arts, amphitheaters, arenas, stadiums, grandstands, or convention centers.

3.3.33.2 ***Building Area.*** The area included within surrounding exterior walls (or exterior walls and fire walls) exclusive of vent shafts and courts. Areas of the building not provided with surrounding walls shall be included in the building areas if such areas are included within the horizontal projection of the roof or floor above.

3.3.33.3 ***Control Area.*** A building or portion of a building within which hazardous materials are allowed to be stored, dispensed, used, or handled in quantities not exceeding the maximum allowable quantities (MAQ).

3.3.33.4 ***Detention and Correctional Residential Housing Area.*** Sleeping areas and any contiguous day room, group activity space, or other common space for customary access of residents.

3.3.33.5* ***Fabrication Area (Fab Area).*** An area within a semiconductor fabrication facility and related research and development areas in which there are processes using hazardous production materials.

Copyright National Fire Protection Association
Provided by IHS under license with NFPA
No reproduction or networking permitted without license from IHS
Not for Resale

3.3.33.6 ***Fire Area.*** The aggregate gross floor area contained within firewalls, fire barriers, or exterior walls of a building.

3.3.33.7 ***Flood Hazard Area.*** The greater of either (1) the special flood hazard area shown on the flood insurance rate map or (2) the area subject to flooding during the design flood and shown on a jurisdiction's flood hazard map, or otherwise legally designated.

3.3.33.7.1 ***Special Flood Hazard Area.*** The land area subject to flooding by the base flood, and depicted on the flood insurance rate map or other flood hazard map as Zone A, Zone AE, Zone A1-30, Zone A99, Zone AO, Zone AR, Zone AH, Zone V, Zone VE, Zone V1-30, or Zone VO.

3.3.33.8 ***Floor Area.***

3.3.33.8.1* ***Gross Floor Area.*** The floor area within the inside perimeter of the outside walls of the building under consideration with no deduction for hallways, stairs, closets, thickness of interior walls, columns, or other features.

3.3.33.8.2 ***Net Floor Area.*** The floor area within the inside perimeter of the outside walls, or the outside walls and fire walls of the building under consideration with deductions for hallways, stairs, closets, thickness of interior walls, columns, or other features.

3.3.33.9 ***Gross Leasable Area.*** The total floor area designated for tenant occupancy and exclusive use. The area of tenant occupancy is measured from the centerlines of joint partitions to the outside of the tenant walls. All tenant areas, including areas used for storage, shall be included in calculating gross leasable area.

3.3.33.10* ***Hazardous Area.*** An area of a structure or building that poses a degree of hazard greater than that normal to the general occupancy of the building or structure.

3.3.33.11 ***Living Area.*** Any normally occupiable space in a residential occupancy, other than sleeping rooms or rooms that are intended for combination sleeping/living, bathrooms, toilet compartments, kitchens, closets, halls, storage or utility spaces, and similar areas. [***101,*** 2006]

3.3.33.12 ***Work Area.***

3.3.33.12.1* ***Employee Work Area (Accessibility).*** All or any portion of a space used only by employees and used only for work, not including corridors, toilet rooms, kitchenettes, and break rooms.

3.3.33.12.2* ***Rehabilitation Work Area.*** That portion of a building affected by any renovation, modification, or reconstruction work as initially intended by the owner and indicated as such in the permit.

3.3.34* Area of Refuge. An area that is either (1) a story in a building where the building is protected throughout by an approved, supervised automatic sprinkler system and has not less than two accessible rooms or spaces separated from each other by smoke-resisting partitions; or (2) a space located in a path of travel leading to a public way that is protected from the effects of fire, either by means of separation from other spaces in the same building or by virtue of location, thereby permitting a delay in egress travel from any level. [***101,*** 2006]

3.3.34.1 ***Accessible Area of Refuge.*** An area of refuge that complies with the accessible route requirements of ICC/ANSI A117.1, *American National Standard for Accessible and Usable Buildings and Facilities.*

3.3.35 Area of Sport Activity (Accessibility). That portion of a room or space where the play or practice of a sport takes place.

3.3.36 Assembly.

3.3.36.1 ***Door Assembly.*** Any combination of a door, frame, hardware, and other accessories that is placed in an opening in a wall that is intended primarily for access or for human entrance or exit. [**252,** 2003]

3.3.36.1.1 ***Fire Door Assembly.*** Any combination of a fire door, a frame, hardware, and other accessories that together provide a specific degree of fire protection to the opening. [**80,** 1999]

3.3.36.1.2 ***Floor Fire Door Assembly.*** A combination of a fire door, a frame, hardware, and other accessories installed in a horizontal plane, which together provide a specific degree of fire protection to a through-opening in a fire resistance–rated floor. [**288,** 2001]

3.3.36.2 ***Fire Window Assembly.*** A window or glass block assembly having a fire protection rating. [**80,** 1999]

3.3.36.3 ***Roof Assembly.*** The component(s) above the roof structural framing including the roof deck, vapor barrier, insulation, roof cover, coatings, toppings, or any combination thereof.

3.3.37 Assembly Area (Accessibility). See 3.3.33.1.

3.3.38 Assembly Occupancy. See 3.3.424.1.

3.3.39 Assistive Listening Systems (ALS) (Accessibility). See 3.3.608.1.

3.3.40 Atmosphere.

3.3.40.1 ***Common Atmosphere.*** The atmosphere that exists between rooms, spaces, or areas within a building that are not separated by an approved smoke barrier.

3.3.40.2 ***Separate Atmosphere.*** The atmosphere that exists between rooms, spaces, or areas that are separated by an approved smoke barrier.

3.3.41* Atrium. A large-volume space created by a floor opening or series of floor openings connecting two or more stories that is covered at the top of the series of openings and is used for purposes other than an enclosed stairway; an elevator hoistway; an escalator opening; or as a utility shaft used for plumbing, electrical, air-conditioning, or communications facilities. [***101,*** 2006]

3.3.42 Attic. The space between the ceiling of the top habitable story and the roof that may be used for storage.

3.3.43 Automatic. That which provides a function without the necessity of human intervention. [***101,*** 2006]

3.3.44 Automatic-Closing Door. See 3.3.163.1.

3.3.45 Balcony (Exterior). An exterior floor projecting from, and supported by, a structure without additional independent supports.

3.3.46* Barricade. The effective screening of a building containing explosive materials from the magazine or another building, a railway, or a highway by a natural or an artificial barrier. A straight line from the top of any sidewall of the building containing explosive materials to the eaveline of any magazine or other building or to a point 12 ft (3.7 m) above the center of a railway or highway shall pass through such barrier.

--`,,```,,,,````-`-`,,`,,`,`,,`---

Copyright National Fire Protection Association
Provided by IHS under license with NFPA
No reproduction or networking permitted without license from IHS
Not for Resale

3.3.47 Barrier.

3.3.47.1* *Fire Barrier.* A continuous membrane or a membrane with discontinuities created by protected openings with a specified fire protection rating, where such membrane is designed and constructed with a specified fire resistance rating to limit the spread of fire, that also restricts the movement of smoke. [***101,*** 2006]

3.3.47.2* *Smoke Barrier.* A continuous membrane, or a membrane with discontinuities created by protected openings, where such membrane is designed and constructed to restrict the movement of smoke.

3.3.47.3* *Thermal Barrier.* A material that limits the average temperature rise of an unexposed surface to not more than 250°F (139°C) for a specified fire exposure complying with the standard time-temperature curve of NFPA 251, *Standard Methods of Tests of Fire Endurance of Building Construction and Materials*.

3.3.48 Base Flood. See 3.3.244.1.

3.3.49 Base Flood Elevation (BFE). See 3.3.247.1.

3.3.50 Basement. Story of a building wholly below grade or partly below and partly above grade, located so that the vertical distance from grade to the floor below is greater than the vertical distance from grade to the floor above.

3.3.50.1 *Basement (Flood Resistance).* For all matters related to flood-resistant design and construction, the portion of a building having its floor below ground level on all sides.

3.3.51 Basic Wind Speed *(V).* Three-second gust speed at 33 ft (10 m) above the ground in Exposure C (see ASCE/SEI 7, Section 6.5.6.3) as determined in accordance with ASCE/SEI 7, Section 6.5.4. [**ASCE/SEI 7:**6.2]

3.3.52 Bay Window. See 3.3.656.1.

3.3.53 Bearing Wall. See 3.3.644.1.

3.3.54 Bearing Wall System. See 3.3.608.2.

3.3.55* Birth Center. A facility in which low-risk births are expected following normal, uncomplicated pregnancies, and in which professional midwifery care is provided to women during pregnancy, birth, and postpartum. [***101,*** 2006]

3.3.56 Bleachers. A grandstand in which the seats are not provided with backrests. [***101,*** 2006]

3.3.57 Board and Care. See 3.3.424.11, Residential Board and Care Occupancy.

3.3.58 Boarding Pier (Accessibility). A portion of a pier where a boat is temporarily secured for the purpose of embarking or disembarking.

3.3.59 Boat Slip (Accessibility). That portion of a pier, main pier, finger pier, or float where a boat is moored for the purpose of berthing, embarking, or disembarking.

3.3.60 Boiler. A closed vessel in which water is heated, steam is generated, or steam is superheated, or in which any combination thereof takes place by the application of heat from combustible fuels, in a self-contained or attached furnace.

3.3.61 Boiler Room. See 3.3.534.1.

3.3.62 Boiling Point. See 3.3.476.1.

3.3.63 Building Area. See 3.3.33.2.

3.3.64 Building Height. See 3.3.308.1.

3.3.65* Buildings. Structures, usually enclosed by walls and a roof, constructed to provide support or shelter for an intended occupancy. [**ASCE/SEI 7:**1.2]

3.3.65.1 *Accessory Building.* Any building or structure used incidentally to another building or structure.

3.3.65.2 *Agricultural Building.* A building located on agricultural property used for sheltering farm implements, hay, grain, livestock, or other farm produce or equipment in which there is no human habitation and that is not used by the public.

3.3.65.3 *Anchor Building.* A building housing any occupancies having low or ordinary hazard contents and having direct access to a mall building, but having all required means of egress independent of the mall.

3.3.65.4* *Apartment Building.* A building or portion thereof containing three or more dwelling units with independent cooking and bathroom facilities.

3.3.65.5 *Bulk Merchandising Retail Building.* A building in which the sales area includes the storage of combustible materials on pallets, in solid piles, or in racks in excess of 12 ft (3660 mm) in storage height.

3.3.65.6 *Detached Building.* A separate building that is separated from other structures or uses as required by this *Code* for a freestanding structure.

3.3.65.7* *Existing Building.* A building erected or officially authorized prior to the effective date of the adoption of this edition of the *Code* by the agency or jurisdiction. [***101,*** 2006]

3.3.65.7.1 *Existing Building (Flood Resistance).* For all matters related to flood-resistant design and construction, a building for which the *start of construction* commenced before the effective date of the jurisdiction's first floodplain management ordinance, code, or standard.

3.3.65.8* *Flexible Plan and Open Plan Educational or Day-Care Building.* A building or portion of a building designed for multiple teaching stations.

3.3.65.9 *Frangible Building.* A detached building containing high hazard contents that is not anticipated to survive a fire, deflagration, or explosion and located to limit damage to surrounding structures.

3.3.65.10* *High-Rise Building.* A building where the floor of an occupiable story is greater than 75 ft (23 m) above the lowest level of fire department vehicle access.

3.3.65.11 *Historic Building (Flood Resistance).* A building or structure that is (1) listed or preliminarily determined to be eligible for listing in the National Register of Historic Places, or (2) determined by the secretary of the U.S. Department of Interior as contributing to the historical significance of a registered historic district or a district preliminarily determined to qualify as an historic district, or (3) designated as historic under a state or local historic preservation program approved by the U.S. Department of Interior.

3.3.65.12* *Mall Building.* A single building enclosing a number of tenants and occupancies wherein two or more tenants have a main entrance into one or more malls. For the purpose of this *Code*, anchor buildings shall not be considered as a part of the mall building.

Copyright National Fire Protection Association
Provided by IHS under license with NFPA
No reproduction or networking permitted without license from IHS
Not for Resale

3.3.65.13* ***Mini-Storage Building.*** A storage occupancy in which non-fire resistance–rated partitions are used to subdivide the occupancy into individual storage units that are not owner occupied.

3.3.65.14 ***Private Building.*** Any building or that portion of a building that is normally not frequented by, and not open to, the public.

3.3.65.15 ***Public Building.*** A building or part of a building that is not a private building.

3.3.65.16* ***Special Amusement Building.*** A building that is temporary, permanent, or mobile and contains a device or system that conveys passengers or provides a walkway along, around, or over a course in any direction as a form of amusement arranged so that the egress path is not readily apparent due to visual or audio distractions or an intentionally confounded egress path, or is not readily available due to the mode of conveyance through the building or structure. [**101B,** 2002]

3.3.66 Built-Up Roofing. A continuous, semiflexible membrane consisting of plies of saturated felts, coated felts, fabrics or mats assembled in place with alternate layers of bitumen, and surfaced with mineral aggregate, bituminous materials, or a granule surfaced sheet (abbreviation, BUR). [**ASTM D 1079:** 2.1]

3.3.67 Bulk Merchandising Retail Building. See 3.3.65.5.

3.3.68 Bulkhead. (1) The exterior walls of a store building that support show windows; (2) a structure above the roof of a building, enclosing elevator machinery, tanks, stairs, or the like, or the part of a shaft extending above the roof; (3) a retaining structure intended to withstand lateral pressure; or (4) a vertical structural wall, usually of stone, timber, metal, concrete, or synthetic material, constructed along, and generally parallel to, the shoreline to retain earth as an extension of the upland, and often to provide suitable water depth at the waterside face.

3.3.69 Business Occupancy. See 3.3.424.2.

3.3.70 Canopy. Any fixed roof-like structure that is self-supporting in whole or in part, but having no sidewalls or curtains other than valances not exceeding 18 in. (457 mm) in depth.

3.3.71 Catch Pool (Accessibility). See 3.3.477.1.

3.3.72 Categories of Rehabilitation Work. The nature and extent of rehabilitation work undertaken in an existing building.

3.3.73 Cavity Wall. See 3.3.644.2.

3.3.74 Ceiling Limit. See 3.3.354.1.

3.3.75 Ceiling Radiation Damper. See 3.3.133.1.

3.3.76 Cellular or Foamed Plastic. See 3.3.471.1.

3.3.77 Change of Occupancy Classification. A change of use involving a change in the occupancy classification of a structure or portion of a structure.

3.3.78 Change of Use. See 3.3.636.2.

3.3.79 Children's Use (Accessibility). See 3.3.636.3.

3.3.80 Chimney. A structure containing one or more vertical or nearly vertical passageways for conveying flue gases to the outside atmosphere. [**211,** 2003]

3.3.81 Circulation Path (Accessibility). An exterior or interior way of passage from one place to another for pedestrians including, but not limited to, walks, hallways, courtyards, stairways, and stair landings.

3.3.82 Class II Combustible Liquid. See 3.3.360.1.1.

3.3.83 Class IIIA Combustible Liquid. See 3.3.360.1.2.

3.3.84 Class IIIB Combustible Liquid. See 3.3.360.1.3.

3.3.85 Class I Organic Peroxide. See 3.3.440.1.

3.3.86 Class II Organic Peroxide. See 3.3.440.2.

3.3.87 Class III Organic Peroxide. See 3.3.440.3.

3.3.88 Class IV Organic Peroxide. See 3.3.440.4.

3.3.89 Class V Organic Peroxide. See 3.3.440.5.

3.3.90 Class 1 Oxidizer. See 3.3.445.1.

3.3.91 Class 2 Oxidizer. See 3.3.445.2.

3.3.92 Class 3 Oxidizer. See 3.3.445.3.

3.3.93 Class 4 Oxidizer. See 3.3.445.4.

3.3.94 Cleanroom. A room in which the concentration of airborne particles is controlled to specified limits, including areas below the raised floor and above the ceiling grid if these areas are part of the air path and within the rated construction.

3.3.95 Closed System Use (Material). See 3.3.636.1.1.

3.3.96 Closed-Circuit Telephone (Accessibility). A telephone with a dedicated line, such as a house phone, courtesy phone, or phone that must be used to gain entry to a facility.

3.3.97 Coal Preparation Plant. See 3.3.469.1.

3.3.98 Coal Tar. A dark brown to black cementitious material produced by the destructive distillation of coal. [**ASTM D 1079:** 2.1]

3.3.99 Combination Fire/Smoke Damper. See 3.3.133.2.

3.3.100 Combustible (Material). See 3.3.388.1.

3.3.101 Combustible Dust. See 3.3.170.2.

3.3.102 Combustible Liquid. See 3.3.360.1.

3.3.103 Combustion. A chemical process of oxidation that occurs at a rate fast enough to produce heat and usually light in the form of either a glow or flame.

3.3.104 Common Atmosphere. See 3.3.40.1.

3.3.105* Common Path of Travel. The portion of exit access that must be traversed before two separate and distinct paths of travel to two exits are available. [***101,*** 2006]

3.3.106 Common Use (Accessibility). See 3.3.636.4.

3.3.107 Compartment.

3.3.107.1* ***Fire Compartment.*** A space within a building that is enclosed by fire barriers on all sides, including the top and bottom. [***101,*** 2006]

3.3.107.2* ***Smoke Compartment.*** A space within a building enclosed by smoke barriers on all sides, including the top and bottom. [***101,*** 2006]

Copyright National Fire Protection Association
Provided by IHS under license with NFPA
No reproduction or networking permitted without license from IHS
Not for Resale

3.3.108 Complex Rehabilitation Project Involving Multiple Codes. A rehabilitation project or portion thereof that involves two or more construction codes and either (1) is an addition, a change of occupancy, or a reconstruction; or (2) is in any category of work and involves the installation of sprinklers.

3.3.109 Component. A part or element of an architectural, electrical, mechanical, or structural system. [**ASCE/SEI 7:**11.2]

3.3.110 Components and Cladding. Elements of the building envelope that do not qualify as part of the main wind-force resisting system. [**ASCE/SEI 7:**6.2]

3.3.111 Composite Wood Structural Panel. See 3.3.447.3.1.

3.3.112 Compressed Gas. See 3.3.270.1.

3.3.113 Compressed Gas Container. See 3.3.119.2.

3.3.114 Concrete.

3.3.114.1 ***Plain Concrete.*** Concrete that either is unreinforced or contains less reinforcement than the minimum amount specified in ACI 318 for reinforced concrete. [**ASCE/SEI 7:**11.2].

3.3.114.2 ***Reinforced Concrete.*** Concrete reinforced with no less than the minimum amount required by ACI 318, prestressed or nonprestressed, and designed on the assumption that the two materials act together in resisting forces. [**ASCE/SEI 7:**11.2]

3.3.115 Construction. Work or operations necessary or incidental to land clearing, grading, excavation, and filling; or erection, demolition, assembling, installing, or equipping of buildings or structures; or alterations incidental thereto, or to the finished product of construction operations.

3.3.115.1 ***Start of Construction (Flood Resistance).*** For all matters related to flood-resistant design and construction, the date of permit issuance for new construction or substantial improvements to an existing structure, provided the actual start of construction, repair, reconstruction, rehabilitation, addition placement, or other improvement is within 180 days after the date of issuance.

3.3.115.1.1* ***Actual Start of Construction (Flood Resistance).*** For all matters related to flood-resistant design and construction, the first placement of permanent construction of a building (including a manufactured home) on a site, such as the pouring of a slab or footings, installation of pilings, or construction of columns. Permanent construction does not include land preparation (such as clearing, excavation, grading, or filling); or the installation of streets and walkways; or the excavation for a basement, footings, piers, or foundations; or the erection of temporary forms; or the installation of accessory buildings such as garages or sheds not occupied as dwelling units and not part of the main building. For a substantial improvement, the actual start of construction means the first alteration of any wall, ceiling, floor, or other structural part of the building, whether or not that alteration affects the exterior dimensions of the building.

3.3.116* Construction Documents. The plans and specifications required to be submitted to the authority having jurisdiction for examination prior to issuance of a building permit, including quality assurance plans where required.

3.3.117 Construction Type. The combination of materials used in the construction of a building or structure, based on the varying degrees of fire resistance and combustibility.

3.3.118 Consumer Fireworks, 1.4G. See 3.3.231.1.

3.3.119 Container.

3.3.119.1 ***Aerosol Container.*** A metal can, up to a maximum size of 33.8 fl oz (1000 ml), or a glass or plastic bottle, up to a maximum size of 4 fl oz (118 ml), that is designed and intended to dispense an aerosol. [**30B,** 2002]

3.3.119.2 ***Compressed Gas Container.*** A pressure vessel designed to hold compressed gases at pressures greater than 1 atmosphere at 68°F (20°C) that includes cylinders, containers, and tanks.

3.3.120 Contents and Furnishings. Any movable objects in a building for functional, operational, or decorative reasons, excluding parts of the building structure, building service equipment, and items meeting the definition of interior finish.

3.3.121 Continuous Gas Detection System. See 3.3.608.3.

3.3.122 Contractor. One who contracts on predetermined terms to provide labor and materials and who is responsible for performance of a construction job in accordance with construction documents.

3.3.123 Control Area. See 3.3.33.3.

3.3.124 Corrosion Resistance. See 3.3.526.2.

3.3.125 Corrosive Material. See 3.3.388.2.

3.3.126 Court. An open, uncovered, unoccupied space, unobstructed to the sky, bounded on three or more sides by exterior building walls. [***101,*** 2006]

3.3.126.1 ***Enclosed Court.*** A court bounded on all sides by the exterior walls of a building or by the exterior walls and lot lines on which walls are permitted.

3.3.126.2 ***Food Court.*** A public seating area located in a mall that serves adjacent food preparation tenant spaces.

3.3.127 Cripple Wall. See 3.3.644.3.

3.3.128* Critical Radiant Flux. The level of incident radiant heat energy on a floor-covering system at the most distant flameout point. [***101,*** 2006]

3.3.129 Cross Slope (Accessibility). The slope that is perpendicular to the direction of travel.

3.3.130 Cryogenic Fluid. A fluid with a boiling point lower than –130°F (–90°C) at an absolute pressure of 14.7 psia (101.325 kPa).

3.3.131 Cultural Resource Properties. Buildings, structures, sites or portions thereof that are culturally significant or that house culturally significant collections for museums, libraries and places of worship. [**909,** 2005].

3.3.132 Dalle Glass. See 3.3.274.1.

3.3.133 Damper.

3.3.133.1 ***Ceiling Radiation Damper.*** A listed device installed in a ceiling membrane of a fire resistance–rated floor-ceiling or roof-ceiling assembly to automatically limit the radiative heat transfer through an air inlet/outlet opening.

3.3.133.2 ***Combination Fire and Smoke Damper.*** A device that meets both the fire damper and smoke damper requirements.

Copyright National Fire Protection Association
Provided by IHS under license with NFPA
No reproduction or networking permitted without license from IHS
Not for Resale

3.3.133.3* ***Fire Damper.*** A device, installed in an air-distribution system, that is designed to close automatically upon detection of heat to interrupt migratory airflow and to restrict the passage of flame.

3.3.133.4 ***Smoke Damper.*** A device within an air-distribution system to control the movement of smoke.

3.3.134 Dangerous. That situation where the stresses in any member due to dead and live loads exceed 150 percent of the stresses allowed in the member or material.

3.3.135 Dash-Bond Coat (of plaster). A thick, wet mixture of aggregate and portland cement mixed in proportions of two parts aggregate to one part portland or plastic cement, dashed onto a monolithic surface to improve the mechanical key for subsequent plaster coats.

3.3.136 Data Conversion. The process of developing the input data set for the assessment method of choice. [***101,*** 2006]

3.3.137 Day-Care Home. See 3.3.320.1.

3.3.138 Day-Care Occupancy. See 3.3.424.3.

3.3.139 Dead Loads. See 3.3.367.1.

3.3.140 Deck. An exterior floor supported on at least two opposing sides by an adjacent structure and/or posts, piers, or other independent supports.

3.3.141 Decorative Glass. See 3.3.274.2.

3.3.142 Deferred Submittals. Those portions of the construction documents and calculations that are not submitted to the authority having jurisdiction with the application for permit, but which are to be submitted at a specified time after the application for permit.

3.3.143 Deflagration. Propagation of a combustion zone at a velocity that is less than the speed of sound in the unreacted medium. [**68,** 2002]

3.3.144 Demolition. Dismantling or razing of all or part of a building and all operations incidental thereto.

3.3.145 Depressurization System. See 3.3.608.4.

3.3.146 Design.

3.3.146.1 ***Allowable Stress Design.*** A method of proportioning structural members such that elastically computed stresses produced in the members by nominal loads do not exceed specified allowable stresses (also called working stress design). [**ASCE/SEI 7:**1.2]

3.3.146.2* ***Proposed Design.*** A design developed by a design team and submitted to the authority having jurisdiction for approval. [***101,*** 2006]

3.3.146.3 ***Strength Design.*** A method of proportioning structural members such that the computed forces produced in the members by the factored loads do not exceed the member design strength (also called *load and resistance factor design*). [**ASCE/SEI 7:**1.2]

3.3.147 Design Earthquake. The earthquake effects that are two-thirds of the corresponding maximum considered earthquake. [**ASCE/SEI 7:**11.2]

3.3.148 Design Fire Scenario. See 3.3.224.1.

3.3.149 Design Flood. See 3.3.244.2.

3.3.150 Design Flood Elevation (DFE). See 3.3.247.2.

3.3.151 Design Pressure *(p).* Equivalent static pressure to be used in the determination of wind loads for buildings. [**ASCE/SEI 7:**6.2]

3.3.152 Design Specification. See 3.3.579.1.

3.3.153 Design Strength. See 3.3.594.1.

3.3.154 Design Team. A group of stakeholders including, but not limited to, representatives of the architect, client, and any pertinent engineers and other designers. [***101,*** 2006]

3.3.155 Detached Building. See 3.3.65.6.

3.3.156 Detention and Correctional Occupancy. See 3.3.424.4.

3.3.157 Detention and Correctional Residential Housing Area. See 3.3.33.4.

3.3.158 Detonation. Propagation of a combustion zone at a velocity that is greater than the speed of sound in the unreacted medium. [**68,** 2002]

3.3.159* Development. Any man-made changes to improved or unimproved real estate.

3.3.159.1 ***Development (Flood Resistance).*** Any man-made changes to improved or unimproved real estate including, but not limited to, buildings or other structures, temporary or permanent storage of materials, mining, dredging, filling, grading, paving, excavation, drilling, or other land-disturbing activities.

3.3.160 Device.

3.3.160.1 ***Multiple Station Alarm Device.*** Two or more single-station alarm devices that can be interconnected so that actuation of one causes all integral audible alarms to operate; or one single-station alarm device having connections to other detectors or to a manual fire alarm box.

3.3.160.2* ***Special Industrial Explosive Device (SIED).*** An explosive power pack containing an explosive charge in the form of a cartridge or construction device.

3.3.160.3* ***Stair Descent Device.*** A portable device, incorporating a means to control the rate of descent, used to transport a person with a severe mobility impairment downward on stairs during emergency egress.

3.3.161 Dispensing. The pouring or transferring of a material from a container, tank, or similar vessel whereby vapors, dusts, fumes, mists, or gases could be liberated to the atmosphere.

3.3.162 Display Fireworks, 1.3G. See 3.3.231.2.

3.3.163 Door.

3.3.163.1 ***Automatic-Closing Door.*** Doors that normally are open but that close when the automatic-closing device is activated. [**80,** 1999]

3.3.163.2 ***Elevator Lobby Door.*** A door between an elevator lobby and another building space other than the elevator shaft. [***101,*** 2006]

3.3.163.3 ***Fire Door.*** The door component of a fire door assembly.

3.3.164 Door Assembly. See 3.3.36.1.

3.3.165* Dormitory. A building or a space in a building in which group sleeping accommodations are provided for more than 16 persons who are not members of the same family in

Copyright National Fire Protection Association
Provided by IHS under license with NFPA
No reproduction or networking permitted without license from IHS
Not for Resale

one room, or a series of closely associated rooms, under joint occupancy and single management, with or without meals, but without individual cooking facilities. [***101,*** 2006]

3.3.166 Draft Stop. A continuous membrane used to subdivide a concealed space to resist the passage of smoke and heat.

3.3.167 Dry Floodproofing. A combination of design modifications that results in a building or structure, including the attendant utility and sanitary facilities, being watertight, with walls substantially impermeable to the passage of water, and with structural components having the capacity to resist loads and load combinations associated with the design flood.

3.3.168 Drycleaning Plant. See 3.3.469.2.

3.3.169 Dumbwaiter. See ANSI/ASME A17.1.

3.3.170 Dust.

3.3.170.1 ***Agricultural Dust.*** Any finely divided solid agricultural material 420 microns or smaller in diameter (material passing a U.S. No. 40 Standard Sieve) that presents a fire or explosion hazard when dispersed and ignited in air. [**61,** 2002]

3.3.170.2 ***Combustible Dust.*** Any finely divided solid material that is 420 microns or smaller in diameter (material passing a U.S. No. 40 Standard Sieve) and presents a fire or explosion hazard when dispersed and ignited in air.

3.3.171 Dwelling Unit. One or more rooms arranged for complete, independent housekeeping purposes, with space for eating, living, and sleeping; facilities for cooking; and provisions for sanitation.

3.3.171.1 ***One- and Two-Family Dwelling Unit.*** A building that contains not more than two dwelling units with independent cooking and bathroom facilities.

3.3.171.2 ***One-Family Dwelling Unit.*** A building that consists solely of one dwelling unit with independent cooking and bathroom facilities.

3.3.171.3 ***Residential Dwelling Unit (Accessibility).*** A building intended to be used primarily as a long-term residence, not including transient lodging, inpatient medical care, licensed long-term care, and detention or correctional facilities.

3.3.171.4 ***Two-Family Dwelling Unit.*** A building that consists solely of two dwelling units with independent cooking and bathroom facilities.

3.3.172 Educational Occupancy. See 3.3.424.5.

3.3.173* Electroluminescent. Refers to a light-emitting capacitor in which alternating current excites phosphor atoms placed between electrically conductive surfaces and produces light. [***101,*** 2006]

3.3.174 Element.

3.3.174.1 ***Element (Accessibility).*** An architectural or mechanical component of a building, facility, space, or site.

3.3.174.2 ***Load-Bearing Element.*** Any column, girder, beam, joist, truss, rafter, wall, floor, or roof sheathing that supports any vertical load in addition to its own weight, or any lateral load.

3.3.174.3 ***Structural Element.*** The columns and girders, beams, trusses, joists, braced frames, moment-resistant frames, and vertical and lateral resisting elements, and other framing members that are designed to carry any portion of the dead or live load and lateral forces, that are essential to the stability of the building or structure.

3.3.175 Elevator. See Chapter 54.

3.3.176 Elevator Evacuation System. See 3.3.608.5.

3.3.177 Elevator Lobby. See 3.3.368.1.

3.3.178 Elevator Lobby Door. See 3.3.163.2.

3.3.179 Emergency Alarm System. See 3.3.608.6.

3.3.180 Employee Work Area (Accessibility). See 3.3.33.12.1.

3.3.181 Enclosed Court. See 3.3.126.1.

3.3.182 Enclosure.

3.3.182.1* ***Exhausted Enclosure.*** An appliance or piece of equipment that consists of a top, a back, and two sides providing a means of local exhaust for capturing gases, fumes, vapors, and mists.

3.3.182.2* ***Smokeproof Enclosure.*** A stair enclosure designed to limit the movement of products of combustion produced by a fire. [***101,*** 2006]

3.3.183 Engine Test Facility. See 3.3.17.

3.3.184 Entrance (Accessibility). Any access point to a building or facility, or portion of a building or facility, used for the purpose of entering, including the approach walk, the vertical access leading to the entrance platform, the entrance platform itself, the vestibule, if provided, the entry door or gate, and the hardware of the entry door or gate.

3.3.184.1 ***Public Entrance (Accessibility).*** An entrance that is not a service entrance or a restricted entrance.

3.3.184.2 ***Restricted Entrance (Accessibility).*** An entrance that is made available for common use on a controlled basis, but not public use, and that is not a service entrance.

3.3.184.3 ***Service Entrance (Accessibility).*** An entrance intended primarily for delivery of goods or services. *[See also 3.3.184.1, Public Entrance (Accessibility), and 3.3.184.2, Restricted Entrance (Accessibility).]*

3.3.185* Equipment or Fixture. Any plumbing, heating, electrical, ventilating, air-conditioning, refrigerating, and fire protection equipment, and elevators, dumbwaiters, escalators, boilers, pressure vessels, and other mechanical facilities or installations that are related to building services.

3.3.186 Equivalency. An alternative means of providing an equal or greater degree of safety than that afforded by strict conformance to prescribed codes and standards.

3.3.187 Escalator. See Chapter 54.

3.3.188 Reserved.

3.3.189 Essential Facilities. See 3.3.204.2.

3.3.190 Exhausted Enclosure. See 3.3.182.1.

3.3.191 Exhibit. A space or portable structure used for the display of products or services. [***101,*** 2006]

3.3.192* Existing. That which is already in existence on the date this edition of the *Code* goes into effect. [***101,*** 2006]

3.3.193 Existing Building. See 3.3.65.7.

3.3.194 Existing Building (Flood Resistance). See 3.3.65.7.1.

--`,,```,,,,````-`-`,,`,,`,`,,`---

Copyright National Fire Protection Association
Provided by IHS under license with NFPA
No reproduction or networking permitted without license from IHS

Not for Resale

3.3.195* Exit. That portion of a means of egress that is separated from all other spaces of a building or structure by construction or equipment as required to provide a protected way of travel to the exit discharge. [***101,*** 2006]

3.3.195.1* ***Horizontal Exit.*** A way of passage from one building to an area of refuge in another building on approximately the same level, or a way of passage through or around a fire barrier to an area of refuge on approximately the same level in the same building that affords safety from fire and smoke originating from the area of incidence and areas communicating therewith. [***101,*** 2006]

3.3.196 Exit Access. That portion of a means of egress that leads to an exit. [***101,*** 2006]

3.3.197 Exit Discharge. That portion of a means of egress between the termination of an exit and a public way. [***101,*** 2006]

3.3.197.1 ***Level of Exit Discharge.*** (1) The lowest story from which not less than 50 percent of the required number of exits and not less than 50 percent of the required egress capacity from such a story discharge directly outside at grade; (2) the story with the smallest elevation change needed to reach grade where no story has 50 percent or more of the required number of exits and 50 percent or more of the required egress capacity from such a story discharge directly outside at grade.

3.3.197.1.1 ***Primary Level of Exit Discharge.*** The lowest story whose floor is level with or above finished ground level on the exterior wall line for 50 percent or more of its perimeter.

3.3.198 Explosive Material. See 3.3.388.3.

3.3.199* Exposure Fire. A fire that starts at a location that is remote from the area being protected and grows to expose that which is being protected. [***101,*** 2006]

3.3.200 Exterior Surface. See 3.3.606.1.

3.3.201 Externally Illuminated. See 3.3.327.1.

3.3.202 Fabrication Area (Fab Area). See 3.3.33.5.

3.3.203 Fabricator. The entity performing off-site manufacture or assembly, or both, of construction components or systems.

3.3.204 Facility.

3.3.204.1 ***Facility (Accessibility).*** All or any portion of buildings, structures, site improvements, elements, and pedestrian or vehicular routes located on a site.

3.3.204.2 ***Essential Facilities.*** Buildings and other structures that are intended to remain operational in the event of extreme environmental loading from wind, snow, or earthquakes. [**ASCE/SEI 7:**1.2]

3.3.204.3 ***Functionally Dependent Facility (Flood Resistance).*** For all matters related to flood-resistant design and construction, any facility that cannot be used for its intended purpose unless it is located or carried out in close proximity to water. *Functionally Dependent Facility* shall include docking or port facilities necessary for the loading or unloading of cargo or passengers, shipbuilding, or ship repair, but shall not include long-term storage, manufacture, sales, or service facilities.

3.3.204.4 ***Health Care Facilities.*** Buildings or portions of buildings in which medical, dental, psychiatric, nursing, obstetrical, or surgical care is provided. Health care facilities include, but are not limited to, hospitals, nursing homes, limited care facilities, clinics, medical and dental offices, and ambulatory care centers.

3.3.204.5 ***Hypobaric Facility.*** A facility that is designed to provide an oxygen-enriched atmosphere in which the concentration of oxygen exceeds 23.5 percent by volume, and a pressure less than 760 mm Hg.

3.3.204.6* ***Limited Care Facility.*** A building or portion of a building used on a 24-hour basis for the housing of four or more persons who are incapable of self-preservation because of age; physical limitations due to accident or illness; or limitations such as mental retardation/developmental disability, mental illness, or chemical dependency. [**99**, 2005]

3.3.204.7 ***Private Building or Facility (Accessibility).*** A building or facility that is a place of public accommodation or a commercial building or facility subject to Title III of the ADA and 28 CFR, Part 36, or a transportation building or facility subject to Title III of the ADA and 49 CFR 37.45.

3.3.204.8 ***Public Building or Facility (Accessibility).*** A building or facility, or portion of a building or facility, designed, constructed, or altered by, on behalf of, or for the use of, a public entity subject to Title II of the ADA and 28 CFR, Part 35, or to Title II of the ADA and 49 CFR 37.41 or 37.43.

3.3.204.9 ***Self-Service Storage Facility (Accessibility).*** Real property designed and used for the purpose of renting or leasing individual storage spaces to customers for the purpose of storing and removing personal property on a self-service basis.

3.3.204.10 ***Temporary Facilities.*** Buildings or other structures that are to be in service for a limited time and have a limited exposure period for environmental loadings. [**ASCE/SEI 7:**1.2]

3.3.205 Facility (Accessibility). See 3.3.204.1.

3.3.206 Factor.

3.3.206.1 ***Importance Factor (I).*** A factor that accounts for the degree of hazard to human life and damage to property. [**ASCE/SEI 7:**6.2]

3.3.206.1.1 ***Occupancy Importance Factor (I).*** A factor assigned to each structure according to its Occupancy Category as prescribed in Table 35.3.1 and ASCE/SEI 7, Table 1-1.

3.3.206.2 ***Load Factor.*** A factor that accounts for deviations of the actual load from the nominal load, for uncertainties in the analysis that transforms the load into a load effect, and for the probability that more than one extreme load will occur simultaneously. [**ASCE/SEI 7:**1.2]

3.3.206.3 ***Resistance Factor.*** A factor that accounts for deviations of the actual strength from the nominal strength and the manner and consequences of failure (also called *strength reduction factor*). [**ASCE/SEI 7:**1.2]

3.3.206.4 ***Safety Factor.*** A factor applied to a predicted value to ensure that a sufficient safety margin is maintained. [***101,*** 2006]

3.3.207 Factored Loads. See 3.3.367.2.

3.3.208 Fence. A freestanding wall, balustrade, or railing having a height of not less than 3 ft (1 m), erected to divide property, to serve as a barrier or guard, or for decoration.

3.3.209 Festival Seating. See 3.3.538.1.

Copyright National Fire Protection Association
Provided by IHS under license with NFPA
No reproduction or networking permitted without license from IHS
Not for Resale

3.3.210* Fiberboard. A fibrous, homogeneous panel made from lignocellulosic fibers and having a density of less than 31 lb/ft^3 (497 kg/m^3) but more than 10 lb/ft^3 (160 kg/m^3).

3.3.211 Finish.

3.3.211.1 ***Interior Ceiling Finish.*** The interior finish of ceilings. [***101,*** 2006]

3.3.211.2* ***Interior Finish.*** The exposed surfaces of walls, ceilings, and floors within buildings.

3.3.211.3* ***Interior Floor Finish.*** The interior finish of floors, ramps, stair treads and risers, and other walking surfaces. [***101,*** 2006]

3.3.211.4 ***Interior Wall Finish.*** The interior finish of columns, fixed or movable walls, and fixed or movable partitions. [***101,*** 2006]

3.3.212 Fire Area. See 3.3.33.6.

3.3.213 Fire Barrier. See 3.3.47.1.

3.3.214 Fire Barrier Wall. See 3.3.644.4.

3.3.215 Fire Compartment. See 3.3.107.1.

3.3.216 Fire Damper. See 3.3.133.3.

3.3.217 Fire Door. See 3.3.163.3.

3.3.218 Fire Door Assembly. See 3.3.36.1.1.

3.3.219 Fire Exit Hardware. See 3.3.299.1.

3.3.220* Fire Model. A structured approach to predicting one or more effects of a fire.

3.3.221 Fire Protection Rating. See 3.3.506.1.

3.3.222 Fire Resistance Rating. See 3.3.506.2.

3.3.223 Fire Safety Functions. Building and fire control functions that are intended to increase the level of life safety for occupants or to control the spread of the harmful effects of fire. [***72,*** 2002]

3.3.224* Fire Scenario. A set of conditions that defines the development of fire, the spread of combustion products throughout a building or portion of a building, the reactions of people to fire, and the effects of combustion products. [***101,*** 2006]

3.3.224.1 ***Design Fire Scenario.*** A fire scenario selected for evaluation of a proposed design. [**914,** 2001]

3.3.225 Fire Wall. See 3.3.644.5.

3.3.226 Fire Window. See 3.3.656.2.

3.3.227 Fire Window Assembly. See 3.3.36.2.

3.3.228 Fireblock. A material, barrier, or construction installed in concealed spaces to prevent the extension of fire for an unspecified period of time.

3.3.229 Fire-Retardant-Treated Wood. See 3.3.657.1.

3.3.230 Firestop. A specific system, device, or construction consisting of the materials that fill the openings around penetrating items such as cables, cable trays, conduits, ducts, pipes, and their means of support through the wall or floor openings to prevent the spread of fire.

3.3.231* Fireworks. Any composition or device for the purpose of producing a visible or an audible effect by combustion, deflagration, or detonation, and that meets the definition of Consumer Fireworks, 1.4G, or Display Fireworks, 1.3G, as set forth in this *Code*.

3.3.231.1* ***Consumer Fireworks, 1.4G.*** *(Formerly known as Class C, Common Fireworks.)* Any small fireworks device designed primarily to produce visible effects by combustion that complies with the construction, chemical composition, and labeling regulations of the U.S. Consumer Product Safety Commission, as set forth in Title 16, CFR, Parts 1500 and 1507. Some small devices designed to produce audible effects are included, such as whistling devices, ground devices containing 0.8 gr (50 mg) or less of explosive composition (salute powder), and aerial devices containing 2 gr (130 mg) or less of explosive composition (salute powder) per explosive unit.

3.3.231.2* ***Display Fireworks, 1.3G.*** *(Formerly known as Class B, Special Fireworks.)* Large fireworks articles designed to produce visible or audible effects for entertainment purposes by combustion, deflagration, or detonation. This term includes, but is not limited to, salutes containing more than 2 gr (130 mg) of explosive composition (salute powder), aerial shells containing more than 60 g (2.1 oz) of total pyrotechnic and explosive composition, and other display pieces that exceed the limits for classification as consumer fireworks, 1.4G.

3.3.232 First Story Above Grade. See 3.3.590.2.

3.3.233* Flame Spread. The propagation of flame over a surface.

3.3.234 Flame Spread Index. See 3.3.332.1.

3.3.235 Flammable Gas. See 3.3.270.2.

3.3.236 Flammable Gas — Liquefied. See 3.3.270.2.1.

3.3.237 Flammable Liquid. See 3.3.360.2.

3.3.238* Flammable Solid. A solid substance, other than one defined as a blasting agent or explosive, that is liable to cause fire through friction or as a result of retained heat from manufacture, that has an ignition temperature below 212°F (100°C), or that burns so vigorously or persistently when ignited that it creates a serious hazard.

3.3.239 Flammable Vapors. A concentration of constituents in air that exceeds 25 percent of its lower flammable limit (LFL).

3.3.240 Flash Point. See 3.3.476.2.

3.3.241 Flashing. The system used to seal membrane edges at walls, expansion joints, drains, gravel stops, and other places where the membrane is interrupted or terminated. Base flashing covers the edges of the membrane. Cap or counterflashing shields the upper edges of the base flashing. [**ASTM D 1079:** 2.1]

3.3.242 Flashover. A stage in the development of a contained fire in which all exposed surfaces reach ignition temperature more or less simultaneously and fire spreads rapidly throughout the space.

3.3.243 Flexible Plan and Open Plan Educational or Day-Care Building. See 3.3.65.8.

3.3.244 Flood. A general and temporary condition of partial or complete inundation of normally dry land by either (1) the overflow of inland or tidal waters, or (2) the rapid accumulation of surface waters from any source.

3.3.244.1 ***Base Flood.*** The flood having a 1 percent chance of being equaled or exceeded in any given year.

Copyright National Fire Protection Association
Provided by IHS under license with NFPA
No reproduction or networking permitted without license from IHS
Not for Resale

3.3.244.2 ***Design Flood.*** The greater of either (1) the base flood or (2) the flood so designated by the jurisdiction as its regulatory flood, with a 1 percent chance, or less, of being equaled or exceeded in any given year.

3.3.245 Flood Boundary and Floodway Map (FBFM). See 3.3.383.1.

3.3.246 Flood Damage–Resistant Material. See 3.3.388.4.

3.3.247 Flood Elevation.

3.3.247.1 ***Base Flood Elevation (BFE).*** The elevation of the base flood, including wave height, relative to the datum specified on a jurisdiction's flood hazard map.

3.3.247.2 ***Design Flood Elevation (DFE).*** The elevation of the design flood, including wave height, relative to the datum specified on a jurisdiction's flood hazard map.

3.3.248 Flood Hazard Area. See 3.3.33.7.

3.3.249 Flood Hazard Boundary Map (FHBM). See 3.3.383.2.

3.3.250 Flood Hazard Map. See 3.3.383.3.

3.3.251 Flood Insurance Rate Map (FIRM). See 3.3.383.4.

3.3.252 Flood Insurance Study. An official report provided to a jurisdiction by the Federal Emergency Management Agency, which accompanies the flood insurance rate map and flood boundary and floodway map, and provides the water surface elevation of the base flood, along with supporting technical data.

3.3.253 Floodway *(Also known as Regulatory Floodway).* The channel of a river, creek, or other watercourse, and the adjacent land area, that must be reserved in order to pass the base flood discharge without cumulatively raising the water surface elevation more than a designated height.

3.3.254 Floor.

3.3.254.1 ***Lowest Floor (Flood Resistance).*** For all matters related to flood-resistant design and construction, the floor of the lowest enclosed area of a building or structure. An unfinished or flood-resistant enclosure used solely for vehicle parking, building access, or limited storage shall not be considered the lowest floor, provided the enclosed area is not constructed so as to render the building or structure in violation of the flood-related provisions of Chapter 39.

3.3.254.2* ***Street Floor.*** A story or floor level accessible from the street or from outside the building at ground level, with the floor level at the main entrance not more than three risers above or below ground level, and arranged and utilized to qualify as the main floor. [**101B,** 2002]

3.3.255 Floor Area. See 3.3.33.8.

3.3.256 Floor Fire Door Assembly. See 3.3.36.1.2.

3.3.257 Foam Plastic Insulation. A cellular plastic, used for thermal insulating or acoustical applications, having a density of 20 lb/ft^3 (320 kg/m^3) or less, containing open or closed cells, and formed by a foaming agent.

3.3.258 Folding and Telescopic Seating. See 3.3.538.2.

3.3.259 Food Court. See 3.3.126.2.

3.3.260 Footing. Part of the foundation of a structure that spreads and transmits the load direct to the soil or to piles.

3.3.261 Foundation Wall. See 3.3.644.6.

3.3.262 Foyer. Area or space within a building, located between the main entrance and the occupied areas of a building, or, when used in connection with a theater, the area between the lobby and the main floor.

3.3.263 Frangible Building. See 3.3.65.9.

3.3.264 Fuel Gas. See 3.3.270.3.

3.3.265 Fuel Load. See 3.3.367.3.

3.3.266 Functionally Dependent Facility (Flood Resistance). See 3.3.204.3.

3.3.267 Gallery. That part of the seating area of a theater or assembly room located above a balcony and having a seating capacity of more than 10.

3.3.268 Gangway (Accessibility). A variable-sloped pedestrian walkway that links a fixed structure or land with a floating structure. Gangways that connect to vessels are not addressed in this *Code.*

3.3.269 Garage. A building or portion of a building in which one or more self-propelled vehicles carrying volatile flammable liquid for fuel or power are kept for use, sale, storage, rental, repair, exhibition, or demonstrating purposes, and all that portion of a building that is on or below the floor or floors in which such vehicles are kept and that is not separated therefrom by suitable cutoffs.

3.3.269.1 ***Parking Garage.*** Garage used solely for parking motor vehicles.

3.3.269.2 ***Private Garage.*** A building or part thereof not over 1000 ft^2 (93 m^2) in area, in which only motor vehicles used by the owner or tenants of the building are stored or kept.

3.3.269.3 ***Repair Garage.*** A building, structure, or portions thereof wherein major repair or painting or body and fender work is performed on motorized vehicles or automobiles, and includes associated floor space used for offices, parking, and showrooms.

3.3.270 Gas.

3.3.270.1* ***Compressed Gas.*** A material, or mixture of materials, that (1) is a gas at 68°F (20°C) or less at 14.7 psia (101.3 kPa) of pressure, and (2) has a boiling point of 68°F (20°C) or less at 14.7 psia (101.3 kPa) that is either liquefied, nonliquefied, or in solution, except those gases that have no other health or physical hazard properties are not considered to be compressed until the pressure in the packaging exceeds 41 psia (282.5 kPa) at 68°F (20°C).

3.3.270.2 ***Flammable Gas.*** A material that is a gas at 68°F (20°C) or less at an absolute pressure of 14.7 psia (101.325 kPa), that is ignitable at an absolute pressure of 14.7 psia (101.325 kPa) when in a mixture of 13 percent or less by volume with air, or that has a flammable range at an absolute pressure of 14.7 psia (101.325 kPa) with air of at least 12 percent, regardless of the lower limit.

3.3.270.2.1 ***Flammable Gas — Liquefied.*** A liquefied compressed gas that under the charged pressure is partially liquid at a temperature of 68°F (20°C) and that is flammable.

3.3.270.3 ***Fuel Gas.*** Natural gas, manufactured gas, liquefied petroleum gas (LP-Gas) in the vapor phase only, liquefied petroleum gas-air mixtures, and mixtures of these

Copyright National Fire Protection Association
Provided by IHS under license with NFPA
No reproduction or networking permitted without license from IHS
Not for Resale

gases, plus gas-air mixtures within the flammable range, with the fuel gas or the flammable component of a mixture being a commercially distributed product.

3.3.270.4 ***Liquefied Petroleum Gas (LP-Gas).*** Any material having a vapor pressure not exceeding that allowed for commercial propane that is composed predominantly of the following hydrocarbons, either by themselves or as mixtures: propane, propylene, butane (normal butane or isobutane), and butylenes. [**58,** 2004]

3.3.270.5 ***Oxidizing Gas.*** A gas that can support and accelerate combustion of other materials. [**55,** 2005]

3.3.271* Gas Cabinet. A fully enclosed, noncombustible enclosure used to provide an isolated environment for compressed gas cylinders in storage or use.

3.3.272 Gas Room. See 3.3.534.2.

3.3.273 General Industrial Occupancy. See 3.3.424.7.1.

3.3.274 Glass.

3.3.274.1 ***Dalle Glass.*** A decorative composite glazing material made of individual pieces of glass that are embedded in a cast matrix of concrete or epoxy.

3.3.274.2 ***Decorative Glass.*** A carved, leaded, or Dalle glass or glazing material whose purpose is decorative or artistic, not functional; whose coloring, texture, or other design qualities or components cannot be removed without destroying the glazing material; and whose surface, or assembly into which it is incorporated, is divided into segments.

3.3.275 Glass Fiber Reinforced Plastic. See 3.3.471.2.

3.3.276 Glazing. Glass or transparent or translucent plastic sheet used in windows, doors, skylights, or curtain walls. [**ASCE/SEI 7:**6.2]

3.3.276.1 ***Plastic Glazing.*** Plastic panels or lenses that are glazed or set in a frame or sash and that are not mechanically fastened to a structural member of the structure.

3.3.276.2 ***Sloped Glazing.*** Any installation of glass or other transparent, translucent, or opaque glazing material installed at a slope of 15 degrees or more from the vertical plane, including glazing materials in skylights, roofs, and sloped walls.

3.3.277 Goal. A nonspecific overall outcome to be achieved that is measured on a qualitative basis. [***101,*** 2006]

3.3.278 Grade (Ground Level). A reference plane representing the average of finished ground level adjoining the building at all exterior walls. When the finished ground level slopes down from the exterior walls, the reference plane is established by the lowest points within the area between the building and the lot line or, when the lot line is more than 6 ft (1.8 m) from the building, between the building and a point 6 ft (1.8 m) from the building.

3.3.278.1* ***Grade (Ground Level, Flood Resistance).*** For all matters related to flood-resistant design and construction, the elevation of the natural or graded ground surface, or fill, adjacent to the walls of a building or structure.

3.3.279* Grandstand. A structure that provides tiered or stepped seating. [***101,*** 2006]

3.3.280 Gravel. Coarse, granular aggregate, with pieces larger than sand grains, resulting from the natural erosion of rock. [**ASTM D 1079:** 2.1]

3.3.281 Gridiron. The structural framing over a stage supporting equipment for hanging or flying scenery and other stage effects. [***101,*** 2006]

3.3.282 Gross Floor Area. See 3.3.33.8.1.

3.3.283 Gross Leasable Area. See 3.3.33.9.

3.3.284 Guard. A vertical protective barrier erected along exposed edges of stairways, balconies, and similar areas. [***101,*** 2006]

3.3.285 Guest. Person hiring or occupying a room for living or sleeping, not included in a family.

3.3.286 Guest Room. See 3.3.534.3.

3.3.287 Guest Suite. See 3.3.605.1.

3.3.288 Gypsum Base for Veneer Plaster. A gypsum board used as the base for application of a gypsum veneer plaster.

3.3.289 Gypsum Board. The generic name for a family of sheet products consisting of a noncombustible core primarily of gypsum with paper surfacing.

3.3.290 Gypsum Lath. A gypsum board used as the base for application of gypsum plaster.

3.3.291 Gypsum Panel Products. The general name for a family of sheet products consisting essentially of gypsum.

3.3.292 Gypsum Plaster. See 3.3.470.1.

3.3.293 Gypsum Veneer Plaster. See 3.3.470.2.

3.3.294 Gypsum Wallboard. A gypsum board used primarily as an interior surfacing for building structures.

3.3.295 Habitable Room. See 3.3.534.4.

3.3.296 Handling. The deliberate movement of material by any means to a point of storage or use.

3.3.297 Handrail. A bar, pipe, or similar member designed to furnish persons with a handhold. [***101,*** 2006]

3.3.298 Hardboard. A fibrous-felted, homogeneous panel made from lignocellulosic fibers consolidated under heat and pressure in a hot press to a density not less than 31 lb/ft^3 (497 kg/m^3).

3.3.299 Hardware.

3.3.299.1 ***Fire Exit Hardware.*** A door-latching assembly incorporating an actuating member or bar that releases the latch bolt upon the application of a force in the direction of egress travel and that additionally provides fire protection where used as part of a fire door assembly.

3.3.299.2 ***Panic Hardware.*** A door-latching assembly incorporating an actuating member or bar that releases the latch bolt upon the application of a force in the direction of egress travel.

3.3.300 Hazardous Area. See 3.3.33.10.

3.3.301 Hazardous Material. See 3.3.388.5.

3.3.302 Hazardous Production Material (HPM). See 3.3.388.6.

3.3.303 Hazardous Production Material (HPM) Room. See 3.3.534.5.

3.3.304 Health Care Facilities. See 3.3.204.4.

3.3.305 Health Care Occupancy. See 3.3.424.6.

Copyright National Fire Protection Association
Provided by IHS under license with NFPA
No reproduction or networking permitted without license from IHS
Not for Resale

3.3.306 Health Hazard Material. See 3.3.388.7.

3.3.307* Heat Release Rate (HRR). The rate at which heat energy is generated by burning. [**921,** 2004]

3.3.308 Height.

3.3.308.1 ***Building Height.*** The vertical distance from the grade to the average elevation of the highest roof surface.

3.3.308.2 ***Story Height.*** The vertical distance from the upper surface of a floor and upper surface of the floor or roof next above.

3.3.308.3 ***Wall Height.*** The vertical distance to the top of the wall measured from the foundation wall or from a girder or other immediate support of such wall.

3.3.309* Heliport. An identifiable area located on land, on water, or on a structure, that also includes any existing buildings or facilities thereon, used or intended to be used for landing and takeoff of helicopters. [**418,** 2001]

3.3.310 Helistop. A heliport where no refueling, maintenance, repair, or storage of helicopters is permitted.

3.3.311 High Explosive (Material). See 3.3.388.3.1.

3.3.312 High Velocity Wave Action (Flood Resistance). Condition present during the base flood where wave heights are greater than or equal to 3 ft (0.9 m) or where wave run-up elevations exceed 3 ft (0.9 m) above grade. Areas subject to high velocity wave action are designated on the flood insurance rate map or flood hazard map as Zone V, Zone VE, Zone VO, or Zone V1-30.

3.3.313 Highly Toxic Material. See 3.3.388.18.1.

3.3.314 High-Piled Storage. See 3.3.588.1.

3.3.315 High-Rise Building. See 3.3.65.10.

3.3.316 Historic Building. See 3.3.601.5, Historic Structure.

3.3.317 Historic Building (Flood Resistance). See 3.3.65.11.

3.3.318 Historic Preservation. A generic term that encompasses all aspects of the professional and public concern related to the maintenance of a historic structure, site, or element in its current condition, as originally constructed, or with the additions and alterations determined to have acquired significance over time. [**914,** 2001]

3.3.319 Historic Structure. See 3.3.601.5.

3.3.320 Home.

3.3.320.1* ***Day-Care Home.*** A building or portion of a building in which more than 3 but not more than 12 clients receive care, maintenance, and supervision, by other than their relative(s) or legal guardians(s), for less than 24 hours per day. [***101,*** 2006]

3.3.320.2 ***Manufactured Home.*** A structure, transportable in one or more sections, which, in the traveling mode, is 8 body-ft (2.4 m) or more in width or 40 body-ft (12.2 m) or more in length or, when erected on site, is 320 ft^2 (29.7 m^2) or more and which is built on a permanent chassis and designed to be used as a dwelling, with or without a permanent foundation, when connected to the required utilities, and includes plumbing, heating, air-conditioning, and electrical systems contained therein; except that such terms shall include any structure which meets all the requirements of this paragraph except the size requirements and with respect to which the manufacturer voluntarily files a certification required by the regulatory agency. Calculations used to determine the number of square feet in a structure are based on the structure's exterior dimensions, measured at the largest horizontal projections when erected on site. These dimensions include all expandable rooms, cabinets, and other projections containing interior space, but do not include bay windows. [**501,** 2005]

3.3.320.2.1 ***Manufactured Home (Flood Resistance).*** For all matters related to installation or erection in flood hazard areas: (1) a structure, transportable in one or more sections, built on a chassis and designed to be used as a dwelling with or without a permanent foundation, when connected to the required utilities, and constructed to the Federal Manufactured Home Construction and Safety Standards and rules and regulations promulgated by the U.S. Department of Housing and Urban Development; (2) a mobile home, park trailer, travel trailer, and similar transportable structure that is placed on a site for 180 consecutive days or longer.

3.3.320.3 ***Nursing Home.*** A building or portion of a building used on a 24-hour basis for the housing and nursing care of four or more persons who, because of mental or physical incapacity, might be unable to provide for their own needs and safety without the assistance of another person. [**99**, 2005]

3.3.321 Horizontal Exit. See 3.3.195.1.

3.3.322 Horizontal Separation. The width of the permanent open space as measured horizontally between a building exterior wall and the adjacent property line or the centerline of a facing street, alley, or public way, or to an imaginary line drawn between exterior walls of adjacent buildings on the same lot.

3.3.323 Hospital. A building or portion thereof used on a 24-hour basis for the medical, psychiatric, obstetrical, or surgical care of four or more inpatients. [***101,*** 2006]

3.3.324* Hot Tub. A spa constructed of wood, with sides and bottoms formed separately, and the whole shaped to join together by pressure from the surrounding hoops, bands, or rods.

3.3.325* Hotel. A building or groups of buildings under the same management in which there are sleeping accommodations for more than 16 persons and primarily used by transients for lodging with or without meals. [***101,*** 2006]

3.3.326 Hypobaric Facility. See 3.3.204.5.

3.3.327 Illuminated.

3.3.327.1* ***Externally Illuminated.*** Refers to an illumination source that is contained outside of the device or sign legend area that is to be illuminated.

3.3.327.2* ***Internally Illuminated.*** Refers to an illumination source that is contained inside the device or legend that is illuminated.

3.3.328 Imminent Danger. A condition or practice in an occupancy or structure that poses a danger that could reasonably be expected to cause death, serious physical harm, or serious property loss. [**1,** 2006]

3.3.329 Importance Factor ***(I).*** See 3.3.206.1.

3.3.330 Incapacitation. A condition under which humans do not function adequately and become unable to escape untenable conditions. [***101,*** 2006]

Copyright National Fire Protection Association
Provided by IHS under license with NFPA
No reproduction or networking permitted without license from IHS
Not for Resale

3.3.331 Incompatible Material. See 3.3.388.8.

3.3.332 Index.

3.3.332.1 ***Flame Spread Index.*** A comparative measure, expressed as a dimensionless number, derived from visual measurements of the spread of flame versus time for a material tested in accordance with NFPA 255, *Standard Method of Test of Surface Burning Characteristics of Building Materials*, ASTM E 84, *Standard Test Method for Surface Burning Characteristics of Building Materials*, or UL 723, *Standard for Test for Surface Burning Characteristics of Building Materials*.

3.3.332.2 ***Smoke Developed Index.*** A comparative measure, expressed as a dimensionless number, derived from measurements of smoke obscuration versus time for a material tested in accordance with NFPA 255, *Standard Method of Test of Surface Burning Characteristics of Building Materials*, ASTM E 84, *Standard Test Method for Surface Burning Characteristics of Building Materials*, or UL 723, *Standard for Test for Surface Burning Characteristics of Building Materials*.

3.3.333 Industrial Occupancy. See 3.3.424.7.

3.3.334 Inorganic. Being or composed of matter other than hydrocarbons and their derivatives, or matter that is not of plant or animal origin. [**ASTM D 1079:** 2.1]

3.3.335 Input Data Specification. See 3.3.579.2.

3.3.336 Inspection Agent. A qualified company or individual assigned to execute the tests and special inspections required by the quality assurance program.

3.3.337 Interior Ceiling Finish. See 3.3.211.1.

3.3.338 Interior Finish. See 3.3.211.2.

3.3.339 Interior Floor Finish. See 3.3.211.3.

3.3.340 Interior Surface. See 3.3.606.2.

3.3.341 Interior Wall Finish. See 3.3.211.4.

3.3.342 Internally Illuminated. See 3.3.327.2.

3.3.343 Joint. A linear opening in or between adjacent assemblies that is designed to allow independent movement of the building.

3.3.344 Jurisdiction. Legally constituted governmental unit that has adopted this *Code* by law or ordinance.

3.3.345 Legitimate Stage. See 3.3.582.1.

3.3.346 Level of Exit Discharge. See 3.3.197.1.

3.3.347 Life Safety Evaluation. A written review dealing with the adequacy of life safety features relative to fire, storm, collapse, crowd behavior, and other related safety considerations. [***101***, 2006]

3.3.348 Light Framed Wall. See 3.3.644.7.

3.3.349 Light Framed Wood Shear Wall. See 3.3.644.8.

3.3.350 Light-Diffusing System. See 3.3.608.8.

3.3.351 Light-Transmitting Plastic. See 3.3.471.3.

3.3.352 Light-Transmitting Plastic Roof Panel. See 3.3.447.1.

3.3.353 Light-Transmitting Plastic Wall Panel. See 3.3.447.2.1.

3.3.354 Limit.

3.3.354.1* ***Ceiling Limit.*** The maximum concentration of an airborne contaminant to which one can be exposed.

3.3.354.2* ***Lower Flammable Limit (LFL).*** The concentration of a combustible material in air below which ignition will not occur.

3.3.354.3* ***Permissible Exposure Limit (PEL).*** The maximum permitted 8-hour, time-weighted average concentration of an airborne contaminant.

3.3.355 Limit State. A condition beyond which a structure or member becomes unfit for service and is judged either to be no longer useful for its intended function (serviceability limited state) or to be unsafe (strength limit state). [**ASCE/SEI 7:**1.2]

3.3.356 Limited Access Structure. See 3.3.601.6.

3.3.357 Limited Care Facility. See 3.3.204.6.

3.3.358 Limited-Combustible (Material). See 3.3.388.9.

3.3.359 Liquefied Petroleum Gas (LP-Gas). See 3.3.270.4.

3.3.360 Liquid. A material that has a melting point that is equal to or less than 68°F (20°C) and a boiling point that is greater than 68°F (20°C) at 14.7 psia (101.3 kPa). When not otherwise identified, the term *liquid* shall mean both flammable and combustible liquids.

3.3.360.1* ***Combustible Liquid.*** Any liquid that has a closed-cup flash point at or above 100°F (37.8°C).

3.3.360.1.1 ***Class II Combustible Liquid.*** Any liquid that has a flash point at or above 100°F (37.8°C) and below 140°F (60°C).

3.3.360.1.2 ***Class IIIA Combustible Liquid.*** Any liquid that has a flash point at or above 140°F (60°C), but below 200°F (93°C).

3.3.360.1.3 ***Class IIIB Combustible Liquid.*** Any liquid that has a flash point at or above 200°F (93°C).

3.3.360.2* ***Flammable Liquid.*** Any liquid having a closed-cup flash point below 100°F (37.8°C).

3.3.361 Liquid Storage Room. See 3.3.534.6.

3.3.362 Live Loads. See 3.3.367.4.

3.3.363 Living Area. See 3.3.33.11.

3.3.364 Load Effects. Forces and deformations produced in structural members by the applied loads. [**ASCE/SEI 7:**1.2]

3.3.365 Load Factor. See 3.3.206.2.

3.3.366 Load-Bearing Element. See 3.3.174.2.

3.3.367 Loads. Forces or other actions that result from the weight of all building materials, occupants and their possessions, environmental effects, differential movement, and restrained dimensional changes. Permanent loads are those loads in which variations over time are rare or of small magnitude. All other loads are variable loads. *(See also 3.3.411, Nominal Loads.)* [**ASCE/SEI 7:**1.2]

3.3.367.1 ***Dead Loads.*** Dead loads consist of the weight of all materials of construction incorporated into the building including but not limited to walls, floors, roofs, ceilings, stairways, built-in partitions, finishes, cladding and other similarly incorporated architectural and structural items, and fixed service equipment including the weight of cranes. [**ASCE/SEI 7:**3.1]

Copyright National Fire Protection Association
Provided by IHS under license with NFPA
No reproduction or networking permitted without license from IHS
Not for Resale

3.3.367.2 ***Factored Loads.*** The product of the nominal load and a load factor. [**ASCE/SEI 7:**1.2]

3.3.367.3* ***Fuel Load.*** The total quantity of combustible contents of a building, space, or fire area.

3.3.367.4 ***Live Loads.*** Live loads are those loads produced by the use and occupancy of the building or other structure and do not include construction or environmental loads such as wind load, snow load, rain load, earthquake load, flood load, or dead load. Live loads on a roof are those produced (1) during maintenance by workers, equipment, and materials; and (2) during the life of the structure by movable objects such as planters and by people. [**ASCE/SEI 7:**4.1]

3.3.367.5 ***Nominal Loads.*** The magnitudes of the loads specified in ASCE/SEI 7, Sections 3 through 22 (dead, live, soil, wind, snow, rain, flood and earthquake). [**ASCE/SEI 7:**1.2]

3.3.367.6 ***Occupant Load.*** The total number of persons that might occupy a building or portion thereof at any one time.

3.3.367.7 ***Occupant Load (Accessibility).*** The number of persons for which the means of egress of a building or portion of a building is designed.

3.3.368 Lobby. An enclosed vestibule directly accessible from the main entrance of a theater, hotel, apartment house, or similar building with an occupant load of 10 or more.

3.3.368.1 ***Elevator Lobby.*** A space from which people directly enter an elevator car(s) and into which people directly enter upon leaving an elevator car(s).

3.3.369 Lockup. An area in other than a detention and correctional occupancy where occupants are restrained and such occupants are mostly incapable of self-preservation because of security measures not under the occupants' control.

3.3.370 Lodging or Rooming House. A building or portion thereof that does not qualify as a one- or two-family dwelling, that provides sleeping accommodations for a total of 16 or fewer people on a transient or permanent basis, without personal care services, with or without meals, but without separate cooking facilities for individual occupants. [***101,*** 2006]

3.3.371 Lot. Smallest parcel of land considered as a unit.

3.3.372 Low Explosive (Material). See 3.3.388.3.2.

3.3.373 Lower Flammable Limit (LFL). See 3.3.354.2.

3.3.374 Lowest Floor (Flood Resistance). See 3.3.254.1.

3.3.375 LP Fuel. See 3.3.270.3, Fuel Gas.

3.3.376 LP-Gas. See 3.3.270.4, Liquefied Petroleum Gas (LP-Gas).

3.3.377 Lumber (Grade). The classification of lumber in regard to strength and utility in accordance with USDOC PS 20 and the grading rules of an approved lumber rules-writing agency.

3.3.378 Mall. A roofed or covered common pedestrian area within a mall building that serves as access for two or more tenants and does not exceed three levels that are open to each other.

3.3.379 Mall Building. See 3.3.65.12.

3.3.380 Manufactured Home. See 3.3.320.2.

3.3.381 Manufactured Home (Flood Resistance). See 3.3.320.2.1.

3.3.382 Manufactured Home Park or Subdivision (Flood Resistance). A parcel, or contiguous parcels, of land divided into two or more manufactured home lots.

3.3.383 Map.

3.3.383.1 ***Flood Boundary and Floodway Map (FBFM).*** An official map of a jurisdiction on which the Federal Emergency Management Agency has delineated flood hazard zones and floodway boundaries for the jurisdiction.

3.3.383.2 ***Flood Hazard Boundary Map (FHBM).*** An official map of a jurisdiction, on which FEMA has delineated special flood hazard areas for the jurisdiction.

3.3.383.3 ***Flood Hazard Map.*** A map delineating the flood hazard area and adopted by a jurisdiction.

3.3.383.4 ***Flood Insurance Rate Map (FIRM).*** An official map of a jurisdiction on which FEMA has delineated special flood hazard areas and risk premium zones applicable to the jurisdiction. The term *flood insurance rate map* shall include the flood boundary and floodway map, and the flood hazard boundary map.

3.3.384 Marine Terminal. See 3.3.618.1.

3.3.385 Marquee. Permanent roofed structure attached to and supported by a building.

3.3.386 Masonry. Built-up unit of construction or combination of materials such as clay, shale, concrete, glass, gypsum, tile, or stone set in mortar.

3.3.387 Masonry Bonded Hollow Wall. See 3.3.644.9.

3.3.388 Material.

3.3.388.1 ***Combustible (Material).*** A material that, in the form in which it is used and under the conditions anticipated, will ignite and burn; a material that does not meet the definition of noncombustible or limited-combustible.

3.3.388.2* ***Corrosive Material.*** A chemical that causes visible destruction of, or irreversible alterations in, living tissue by chemical action at the site of contact.

3.3.388.3* ***Explosive Material.*** A chemical compound, mixture, or device, the primary or common purpose of which is to function by explosion.

3.3.388.3.1 ***High Explosive (Material).*** Explosive material, such as dynamite, that can be caused to detonate by means of a No. 8 test blasting cap when unconfined.

3.3.388.3.2* ***Low Explosive (Material).*** Explosive material that will burn or deflagrate when ignited.

3.3.388.4 ***Flood Damage–Resistant Material.*** Any construction material capable of direct and prolonged contact with floodwaters without sustaining any damage that requires more than cosmetic repairs.

3.3.388.5 ***Hazardous Material.*** A chemical or substance that is classified as a physical hazard material or a health hazard material, whether the chemical or substance is in usable or waste condition. *(See also 3.3.388.7 Health Hazard Material, and 3.3.388.12 Physical Hazard Material.)*

Copyright National Fire Protection Association
Provided by IHS under license with NFPA
No reproduction or networking permitted without license from IHS
Not for Resale

3.3.388.6 ***Hazardous Production Material (HPM).*** A solid, liquid, or gas associated with semiconductor manufacturing that has a degree-of-hazard rating of 3 or 4 in health, flammability, instability, or water reactivity in accordance with NFPA 704 and that is used directly in research, laboratory, or production processes that have as their end product materials that are not hazardous.

3.3.388.7 ***Health Hazard Material.*** A chemical or substance classified as a toxic, highly toxic, or corrosive material in accordance with definitions set forth in this *Code*.

3.3.388.8 ***Incompatible Material.*** Materials that, when in contact with each other, have the potential to react in a manner that generates heat, fumes, gases, or by-products that are hazardous to life or property.

3.3.388.9* ***Limited-Combustible (Material).*** Refers to a building construction material not complying with the definition of noncombustible material that, in the form in which it is used, has a potential heat value not exceeding 3500 Btu/lb (8141 kJ/kg), where tested in accordance with NFPA 259, *Standard Test Method for Potential Heat of Building Materials*, and includes either of the following: (1) materials having a structural base of noncombustible material, with a surfacing not exceeding a thickness of ⅛ in. (3.2 mm) that has a flame spread index not greater than 50; and (2) materials, in the form and thickness used, having neither a flame spread index greater than 25 nor evidence of continued progressive combustion, and of such composition that surfaces that would be exposed by cutting through the material on any plane would have neither a flame spread index greater than 25 nor evidence of continued progressive combustion, when tested in accordance with NFPA 255, *Standard Method of Test of Surface Burning Characteristics of Building Materials*, or ASTM E 84, *Standard Test Method of Surface Burning Characteristics of Building Materials.*

3.3.388.10 ***Metal Composite Material (MCM).*** A factory-manufactured panel consisting of metal skins bonded to both faces of a core made of any plastic other than foamed plastic insulation as defined in 3.3.257.

3.3.388.11 ***Noncombustible Material.*** A material that, in the form in which it is used and under the conditions anticipated, will not ignite, burn, support combustion, or release flammable vapors, when subjected to fire or heat. Materials that are reported as passing ASTM E 136, *Standard Test Method for Behavior of Materials in a Vertical Tube Furnace at 750 Degrees C*, shall be considered noncombustible materials.

3.3.388.12 ***Physical Hazard Material.*** A chemical or substance classified as a combustible liquid, explosive, flammable cryogen, flammable gas, flammable liquid, flammable solid, organic peroxide, oxidizer, oxidizing cryogen, pyrophoric, unstable (reactive), or water-reactive material.

3.3.388.13 ***Pyrophoric Material.*** A chemical with an autoignition temperature in air at or below 130°F (54.4°C).

3.3.388.14 ***Solid Material.*** A material that has a melting point, decomposes, or sublimes at a temperature greater than 68°F (20°C).

3.3.388.15 ***Sprayed Fire-Resistive Material.*** A cementitious or fibrous material that is spray-applied to structural elements, walls, floors, and roofs to provide fire-resistive protection.

3.3.388.16* ***Thermoplastic Material.*** Plastic material capable of being repeatedly softened by heating and hardened by cooling and, that in the softened state, can be repeatedly shaped by molding or forming.

3.3.388.17* ***Thermoset Material.*** Plastic material that, after having been cured by heat or other means, is substantially infusible and cannot be softened and formed.

3.3.388.18 ***Toxic Material.*** A material that produces a lethal dose or a lethal concentration within any of the following categories: (1) a chemical or substance that has a median lethal dose (LD_{50}) of more than 50 mg/kg but not more than 500 mg/kg of body weight when administered orally to albino rats weighing between 200 g and 300 g each; (2) a chemical or substance that has a median lethal dose (LD_{50}) of more than 200 mg/kg but not more than 1000 mg/kg of body weight when administered by continuous contact for 24 hours, or less if death occurs within 24 hours, with the bare skin of albino rabbits weighing between 2 kg and 3 kg each; (3) a chemical or substance that has a median lethal concentration (LC_{50}) in air of more than 200 parts per million but not more than 2000 parts per million by volume of gas or vapor, or more than 2 mg/L but not more than 20 mg/L, of mist, fume, or dust when administered by continuous inhalation for 1 hour, or less if death occurs within 1 hour, to albino rats weighing between 200 g and 300 g each.

3.3.388.18.1* ***Highly Toxic Material.*** A material that produces a lethal dose or lethal concentration that falls within any of the following categories: (1) a chemical that has a median lethal dose (LD_{50}) of 50 mg/kg or less of body weight when administered orally to albino rats weighing between 200 g and 300 g each; (2) a chemical that has a median lethal dose (LD_{50}) of 200 mg/kg or less of body weight when administered by continuous contact for 24 hours, or less if death occurs within 24 hours, with the bare skin of albino rabbits weighing between 2 kg and 3 kg each; (3) a chemical that has a median lethal concentration (LC_{50}) in air of 200 parts per million by volume or less of gas or vapor, or 2 mg/L or less of mist, fume, or dust, when administered by continuous inhalation for 1 hour, or less if death occurs within 1 hour, to albino rats weighing between 200 g and 300 g each.

3.3.388.19* ***Unstable (Reactive) Material.*** A material that, in the pure state or as commercially produced, will vigorously polymerize, decompose or condense, become self-reactive, or otherwise undergo a violent chemical change under conditions of shock, pressure, or temperature.

3.3.388.20* ***Water-Reactive Material.*** A material that explodes; violently reacts; produces flammable, toxic, or other hazardous gases; or evolves enough heat to cause self-ignition or ignition of nearby combustibles upon exposure to water or moisture.

3.3.388.21 ***Weathered-Membrane Material.*** Membrane material that has been subjected to a minimum of 3000 hours in a weatherometer in accordance with ASTM G 155, *Standard Practice for Operating Xenon Arc Light Apparatus for Exposure of Non-Metallic Materials,* or approved equivalent.

3.3.389* Materials and Methods Requirements. Those requirements of applicable codes that specify material standards, details of installation and connection, joints, penetrations, and continuity of any element, component, or system in the building.

Copyright National Fire Protection Association
Provided by IHS under license with NFPA
No reproduction or networking permitted without license from IHS
Not for Resale

3.3.390 Maximum Considered Earthquake Ground Motion. The most severe earthquake effects considered by this code as defined in ASCE/SEI 7, Section 11.4. [**ASCE/SEI 7:**11.2]

3.3.391* Means of Egress. A continuous and unobstructed way of travel from any point in a building or structure to a public way consisting of three separate and distinct parts: (1) the exit access, (2) the exit, and (3) the exit discharge. [***101*,** 2006]

3.3.391.1 ***Accessible Means of Egress.*** A means of egress that provides an accessible route to an area of refuge, a horizontal exit, or a public way.

3.3.392 Means of Escape. A way out of a building or structure that does not conform to the strict definition of means of egress but does provide an alternate way out. [***101*,** 2006]

3.3.393* Membrane. A thin layer of construction material.

3.3.394 Membrane Penetration. See 3.3.455.1.

3.3.395 Membrane Structure. See 3.3.601.7.

3.3.396 Mercantile Occupancy. See 3.3.424.8.

3.3.397 Metal Composite Material (MCM) See 3.3.388.10.

3.3.398 Metal Composite Panel Wall. See 3.3.644.10.

3.3.399 Mezzanine. An intermediate level between the floor and the ceiling of any room or space. [***101*,** 2006]

3.3.399.1 ***Mezzanine (Accessibility).*** An intermediate level or levels between the floor and ceiling of any story with an aggregate floor area of not more than one-third of the area of the room or space in which the level or levels are located, and having sufficient elevation that space for human occupancy can be provided on the floor below.

3.3.400 Mini-Storage Building. See 3.3.65.13.

3.3.401 Mixed Occupancy. See 3.3.424.9.

3.3.402 Modification. The reconfiguration of any space, the addition or elimination of any door or window, the addition or elimination of load-bearing elements, the reconfiguration or extension of any system, or the installation of any additional equipment.

3.3.403 Moist Curing. A method for the retention of moisture for hydration of portland cement plaster.

3.3.404 Motor Freight Terminal. See 3.3.618.2.

3.3.405 Multilevel Play Structure. See 3.3.601.8.

3.3.406 Multiple Occupancy. See 3.3.424.10.

3.3.407 Multiple Station Alarm Device. See 3.3.160.1.

3.3.408 Multipurpose Assembly Occupancy. See 3.3.424.1.1.

3.3.409 Net Floor Area. See 3.3.33.8.2.

3.3.410 Nominal Dimension.

3.3.410.1* ***Nominal Dimension (Masonry).*** A specified dimension plus an allowance for the joints with which the units are to be laid.

3.3.410.2 ***Nominal Dimension (Metal).*** A specified dimension or weight plus or minus the specified manufacturing tolerance for the material or product.

3.3.411 Nominal Loads. See 3.3.367.5.

3.3.412 Nominal Size (Lumber). The commercial size designation of width and depth, in standard sawn lumber and glued laminated lumber grades, meeting the requirements of USDOC PS 20 for sawn lumber and AF&PA NDS for glued laminated lumber.

3.3.413 Nominal Strength. See 3.3.594.2,

3.3.414 Nonbearing Wall. See 3.3.644.11.

3.3.415 Noncombustible Material. See 3.3.388.11.

3.3.416 Nonconforming. Not conforming to the requirements of this *Code*.

3.3.417 Non-Sleeping Suite (Health Care Occupancies). See 3.3.605.2.1.

3.3.418 Nonstructural Wall. See 3.3.644.12.

3.3.419 Normal Temperature and Pressure (NTP). A temperature of 70°F (21.1°C) and a pressure of 1 atmosphere [14.7 psia (101.3 kPa)].

3.3.420 NTP. See 3.3.419, Normal Temperature and Pressure (NTP).

3.3.421 Number of Stories. See 3.3.590.3.

3.3.422 Nursing Home. See 3.3.320.3.

3.3.423* Objective. A requirement that needs to be met to achieve a goal.

3.3.424 Occupancy. The purpose for which a building or other structure, or part thereof, is used or intended to be used. [**ASCE/SEI 7:**1.2]

3.3.424.1* ***Assembly Occupancy.*** An occupancy (1) used for a gathering of 50 or more persons for deliberation, worship, entertainment, eating, drinking, amusement, awaiting transportation, or similar uses; or (2) used as a special amusement building, regardless of occupant load. [***101*,** 2006]

3.3.424.1.1 ***Multipurpose Assembly Occupancy.*** An assembly room designed to accommodate temporarily any of several possible assembly uses.

3.3.424.2* ***Business Occupancy.*** An occupancy used for the transaction of business other than mercantile.

3.3.424.3* ***Day-Care Occupancy.*** An occupancy in which four or more clients receive care, maintenance, and supervision, by other than their relatives or legal guardians, for less than 24 hours per day.

3.3.424.4* ***Detention and Correctional Occupancy.*** An occupancy used to house one or more persons under varied degrees of restraint or security where such occupants are mostly incapable of self-preservation because of security measures not under the occupants' control.

3.3.424.5* ***Educational Occupancy.*** An occupancy used for educational purposes through the twelfth grade by six or more persons for 4 or more hours per day or more than 12 hours per week.

3.3.424.6* ***Health Care Occupancy.*** An occupancy used for purposes of medical or other treatment or care of four or more persons where such occupants are mostly incapable of self-preservation due to age, physical or mental disability, or because of security measures not under the occupants' control.

3.3.424.6.1 ***Ambulatory Health Care Occupancy.*** A building or portion thereof used to provide services or treatment simultaneously to four or more patients that provides, on

Copyright National Fire Protection Association
Provided by IHS under license with NFPA
No reproduction or networking permitted without license from IHS
Not for Resale

an outpatient basis, one or more of the following: (1) treatment for patients that renders the patients incapable of taking action for self-preservation under emergency conditions without the assistance of others; (2) anesthesia that renders the patients incapable of taking action for self-preservation under emergency conditions without the assistance of others; (3) emergency or urgent care for patients who, due to the nature of their injury or illness, are incapable of taking action for self-preservation under emergency conditions without the assistance of others.

3.3.424.7* ***Industrial Occupancy.*** An occupancy in which products are manufactured or in which processing, assembling, mixing, packaging, finishing, decorating, or repair operations are conducted.

3.3.424.7.1* ***General Industrial Occupancy.*** An industrial occupancy in which ordinary and low hazard industrial operations are conducted in buildings of conventional design suitable for various types of industrial processes.

3.3.424.7.2 ***Special-Purpose Industrial Occupancy.*** An industrial occupancy in which ordinary and low hazard industrial operations are conducted in buildings designed for, and suitable only for, particular types of operations, characterized by a relatively low density of employee population, with much of the area occupied by machinery or equipment.

3.3.424.8* ***Mercantile Occupancy.*** An occupancy used for the display and sale of merchandise.

3.3.424.9 ***Mixed Occupancy.*** A multiple occupancy where the occupancies are intermingled.

3.3.424.10* ***Multiple Occupancy.*** A building or structure in which two or more classes of occupancy exist.

3.3.424.11* ***Residential Board and Care Occupancy.*** A building or portion thereof that is used for lodging and boarding of four or more residents, not related by blood or marriage to the owners or operators, for the purpose of providing personal care services.

3.3.424.12* ***Residential Occupancy.*** An occupancy that provides sleeping accommodations for purposes other than health care or detention and correctional.

3.3.424.13 ***Separated Occupancy.*** A multiple occupancy where the occupancies are separated by fire resistance–rated assemblies.

3.3.424.14* ***Storage Occupancy.*** An occupancy used primarily for the storage or sheltering of goods, merchandise, products, vehicles, or animals.

3.3.425 Occupancy Importance Factor *(I).* See 3.3.206.1.1.

3.3.426 Occupant Characteristics. The abilities or behaviors of people before and during a fire. [***101,*** 2006]

3.3.427 Occupant Load. See 3.3.367.6.

3.3.428 Occupant Load (Accessibility). See 3.3.367.7.

3.3.429 Occupiable (Accessibility). A room or enclosed space designed for human occupancy.

3.3.430 Occupiable Story. See 3.3.590.4.

3.3.431 One- and Two-Family Dwelling Unit. See 3.3.171.1.

3.3.432 One-Family Dwelling Unit. See 3.3.171.2.

3.3.433 Open Parking Structure. See 3.3.601.9.

3.3.434 Open Structure. See 3.3.601.10.

3.3.435 Open System Use (Material). See 3.3.636.1.2.

3.3.436 Open-Air Mercantile Operation. An operation conducted outside of all structures, with the operations area devoid of all walls and roofs except for small, individual, weather canopies. [***101,*** 2006]

3.3.437 Openings. Apertures or holes in the building envelope that allow air to flow through the building envelope and which are designed as "open" during design winds as defined by ASCE/SEI 7. [**ASCE/SEI 7:**6.2]

3.3.437.1 ***Vertical Opening.*** An opening through a floor or roof. [***101,*** 2006]

3.3.438 Operable Part (Accessibility). A component of an element used to insert or withdraw objects, or to activate, deactivate, or adjust the element.

3.3.439 Organic. Being or composed of hydrocarbons or their derivatives, or matter of plant or animal origin. [**ASTM D 1079:** 2.1]

3.3.440* Organic Peroxide. Any organic compound having a double oxygen or peroxy (-O-O-) group in its chemical structure. [**432,** 2002]

3.3.440.1 ***Class I Organic Peroxide.*** Organic peroxide formulations that are capable of deflagration but not detonation.

3.3.440.2 ***Class II Organic Peroxide.*** Organic peroxide formulations that burn very rapidly and that present a severe reactivity hazard.

3.3.440.3 ***Class III Organic Peroxide.*** Organic peroxide formulations that burn rapidly and that present a moderate reactivity hazard.

3.3.440.4 ***Class IV Organic Peroxide.*** Organic peroxide formulations that burn in the same manner as ordinary combustibles and that present a minimal reactivity hazard.

3.3.440.5 ***Class V Organic Peroxide.*** Organic peroxide formulations that burn with less intensity than ordinary combustibles or do not sustain combustion and that present no reactivity hazard.

3.3.441 Oriented Strand Board (OSB) Wood Structural Panel. See 3.3.447.3.2.

3.3.442 Other Structures. See 3.3.601.11.

3.3.443* Outside Stair. A stair with not less than one side open to the outer air. [***101,*** 2006]

3.3.444 Owner. Any person, agent, firm, or corporation having a legal or equitable interest in a property, building, or structure.

3.3.445* Oxidizer. A material, other than a blasting agent or explosive, that readily yields oxygen or other oxidizing gas, or that readily reacts to promote or initiate combustion of combustible materials.

3.3.445.1 ***Class 1 Oxidizer.*** An oxidizer that does not moderately increase the burning rate of combustible materials with which it comes into contact.

Copyright National Fire Protection Association
Provided by IHS under license with NFPA
No reproduction or networking permitted without license from IHS
Not for Resale

3.3.445.2 ***Class 2 Oxidizer.*** An oxidizer that causes a moderate increase in the burning rate of combustible materials with which it comes into contact.

3.3.445.3 ***Class 3 Oxidizer.*** An oxidizer that causes a severe increase in the burning rate of combustible materials with which it comes into contact.

3.3.445.4 ***Class 4 Oxidizer.*** An oxidizer that can undergo an explosive reaction due to contamination or exposure to thermal or physical shock and that causes a severe increase in the burning rate of combustible materials with which it comes into contact.

3.3.446 Oxidizing Gas. See 3.3.270.5.

3.3.447 Panel.

3.3.447.1* ***Light-Transmitting Plastic Roof Panel.*** A structural plastic panel in the plane of the roof, fastened to roof members, that transmits light into the structure.

3.3.447.2 ***Wall Panel.*** Nonbearing wall built between columns and piers wholly supported at each story.

3.3.447.2.1* ***Light-Transmitting Plastic Wall Panel.*** A plastic panel fastened to structural wall members that transmits light into the structure.

3.3.447.3 ***Wood Structural Panel.*** A panel manufactured from veneers; or wood strands or wafers; or a combination of veneer and wood strands or wafers bonded together with waterproof synthetic resins or other suitable bonding systems, including composite panels, oriented strand board, and plywood.

3.3.447.3.1 ***Composite Wood Structural Panel.*** A structural panel that is made of layers of veneer and wood-based material.

3.3.447.3.2 ***Oriented Strand Board (OSB) Wood Structural Panel.*** A mat-formed wood structural panel product composed of thin, rectangular wood strands or wafers arranged in oriented layers and bonded with waterproof adhesive.

3.3.447.3.3 ***Plywood Wood Structural Panel.*** A wood structural panel comprised of plies of wood veneer arranged in cross-aligned layers.

3.3.448 Panic Hardware. See 3.3.299.2.

3.3.449 Parapet. That part of a wall entirely above the roofline.

3.3.450 Parking Garage. See 3.3.269.1.

3.3.451 Partial Height Partition. See 3.3.453.1.

3.3.452* Particleboard. A generic term for a panel primarily composed of cellulosic materials, generally in the form of discrete pieces or particles, as distinguished from fibers, that are combined with synthetic resin or other suitable bonding system by a process in which the interparticle bond is created by the bonding system under heat and pressure.

3.3.453* Partition. A nonstructural interior wall that spans horizontally or vertically from support to support. The supports may be the basic building frame, subsidiary structural members, or other portions of the partition system. [**ASCE/SEI 7:**11.2]

3.3.453.1 ***Partial Height Partition.*** A partition with a height not greater than 72 in. (1830 mm).

3.3.453.2* ***Smoke Partition.*** A continuous membrane that is designed to form a barrier to limit the transfer of smoke. [***101,*** 2006]

3.3.454 Passive Sub-Slab Depressurization System. See 3.3.608.4.2.

3.3.455 Penetration.

3.3.455.1* ***Membrane Penetration.*** An opening for penetrations made through one side of a fire resistance–rated assembly.

3.3.455.2* ***Through-Penetration.*** An opening for penetrations that pass through both sides of a vertical or horizontal fire resistance–rated assembly.

3.3.456* Penthouse. Enclosed structure other than a roof structure located on a roof, extending not more than 12 ft (3.7 m) above a roof.

3.3.457* Performance Criteria. Threshold values on measurement scales that are based on quantified performance objectives. [***101,*** 2006]

3.3.458 Permanent. Any object that is intended to remain in place for more than 180 days in any consecutive 12-month period. *(See also 3.3.601.12, Permanent Structure.)*

3.3.459 Permanent Structure. See 3.3.601.12.

3.3.460 Permissible Exposure Limit (PEL). See 3.3.354.3.

3.3.461 Permit. A document issued by the authority having jurisdiction for the purpose of authorizing performance of a specified activity. [**1,** 2006]

3.3.462 Person. Any individual, firm, partnership, corporation, company, association, or joint-stock association, including any trustee, receiver, assignee, or personal representative thereof.

3.3.463* Personal Care. The care of residents who do not require chronic or convalescent medical or nursing care. [***101,*** 2006]

3.3.464* Photoluminescent. Having the ability to store incident electromagnetic radiation typically from ambient light sources, and release it in the form of visible light. [**301,** 2001]

3.3.465 Physical Hazard Material. See 3.3.388.12.

3.3.466 Pictogram (Accessibility). A pictorial symbol that represents activities, facilities, or concepts.

3.3.467 Pinrail. A rail on or above a stage through which belaying pins are inserted and to which lines are fastened. [***101,*** 2006]

3.3.468 Plain Concrete. See 3.3.114.1.

3.3.469 Plant.

3.3.469.1* ***Coal Preparation Plant.*** A facility designed to prepare coal for shipment, including coal mine surface buildings and structures, housing, and supporting coal-processing and coal-handling equipment.

3.3.469.2 ***Drycleaning Plant.*** A plant in which drycleaning and associated operations are conducted, including the office, receiving area, and storage rooms. [**32,** 2004]

3.3.470 Plaster.

3.3.470.1 ***Gypsum Plaster.*** The generic name for a family of powdered cementitious products consisting primarily of

--`,,```,,,,````-`-`,,`,,`,`,,`---

Copyright National Fire Protection Association
Provided by IHS under license with NFPA
No reproduction or networking permitted without license from IHS
Not for Resale

calcined gypsum with additives to modify physical characteristics, and having the ability, when mixed with water, to produce a plastic mortar or slurry that can be formed to the desired shape by various methods and subsequently sets to a hard, rigid mass.

3.3.470.2 ***Gypsum Veneer Plaster.*** A calcined gypsum plaster specially manufactured to provide high strength, hardness, and abrasion resistance when applied in thin coats over a gypsum base for veneer plasters.

3.3.470.3 ***Portland Cement Plaster.*** A plaster mix in which portland cement or combinations of portland and masonry cements or portland cement and lime are the principal cementitious materials mixed with aggregate.

3.3.471* Plastic. Any of a wide range of natural or synthetic organic materials of high molecular weight that can be formed by pressure, heat, extrusion, and other methods into desired shapes. [**921,** 2004]

3.3.471.1* ***Cellular or Foamed Plastic.*** A heterogeneous system comprised of not less than two phases, one of which is a continuous, polymeric, organic material, and the second of which is deliberately introduced for the purpose of distributing gas in voids throughout the material.

3.3.471.2 ***Glass Fiber Reinforced Plastic.*** Plastic material containing not less than 20 percent by weight glass fiber that imparts some mechanical properties superior to those of the base resin.

3.3.471.3 ***Light-Transmitting Plastic.*** Plastic material that is used to transmit light into structures.

3.3.472 Plastic Glazing. See 3.3.276.1.

3.3.473* Platform. The raised area within a building used for the presentation of music, plays, or other entertainment. [***101,*** 2006]

3.3.473.1 ***Temporary Platform.*** A platform erected within an area for not more than 30 days.

3.3.474 Plenum. A compartment or chamber to which one or more air ducts are connected and that forms part of the air distribution system. [**90A,** 2002]

3.3.475 Plywood Wood Structural Panel. See 3.3.447.3.3.

3.3.476 Point.

3.3.476.1* ***Boiling Point.*** The temperature at which the vapor pressure of a liquid equals the surrounding atmospheric pressure. For purposes of defining the boiling point, atmospheric pressure shall be considered to be 14.7 psia (760 mm Hg). For mixtures that do not have a constant boiling point, the 20 percent evaporated point of a distillation performed in accordance with ASTM D 86 shall be considered to be the boiling point.

3.3.476.2* ***Flash Point.*** The minimum temperature at which a liquid or a solid emits vapor sufficient to form an ignitable mixture with air near the surface of the liquid or the solid.

3.3.477 Pool.

3.3.477.1 ***Catch Pool (Accessibility).*** A pool or designated section of a pool used as a terminus for water slide flumes.

3.3.477.2 ***Public Pool.*** Any pool that is not a residential pool.

3.3.477.3 ***Residential Pool.*** A swimming pool that is intended for noncommercial use by not more than three owner families and their guests.

3.3.477.4 ***Swimming Pool.*** Any constructed pool intended for swimming or diving, permanent or nonportable, that is over 24 in. (610 mm) in depth, has a surface area exceeding 250 ft^2 (23 m^2) or a volume over 3250 gal (12,300 L).

3.3.478 Portable Spa. See 3.3.572.1.

3.3.479 Portland Cement Plaster. See 3.3.470.3.

3.3.480 Prefabricated. Fabricated prior to erection or installation on or in a building or on a foundation.

3.3.481 Preservative-Treated Wood. See 3.3.657.2.

3.3.482 Primary Level of Exit Discharge. See 3.3.197.1.1.

3.3.483 Private Building. See 3.3.65.14.

3.3.484 Private Building or Facility (Accessibility). See 3.3.204.7.

3.3.485 Private Garage. See 3.3.269.2.

3.3.486 Private Party Tent. See 3.3.617.1.

3.3.487 Production Studio. A building, a portion of a building, or a group of buildings designed and constructed for use by the entertainment industry for the purpose of motion picture, television, or commercial productions, or broadcasting television programs utilizing a soundstage. [**140,** 2004]

3.3.488 Professional Engineer. A person registered or licensed to practice engineering in a jurisdiction, subject to all laws and limitations imposed by the jurisdiction.

3.3.489 Property Line. Line dividing one lot from another, or from a street or other public space.

3.3.490 Proposed Design. See 3.3.146.2.

3.3.491 Proscenium Wall. See 3.3.644.13.

3.3.492 Public Building. See 3.3.65.15.

3.3.493 Public Building or Facility (Accessibility). See 3.3.204.8.

3.3.494 Public Entrance (Accessibility). See 3.3.184.1.

3.3.495 Public Pool. See 3.3.477.2.

3.3.496 Public Spa. See 3.3.572.2.

3.3.497 Public Use (Accessibility). See 3.3.636.5.

3.3.498 Public Way. See 3.3.650.1.

3.3.499 Pyrophoric Material. See 3.3.388.13.

3.3.500 Pyrotechnic Article. A pyrotechnic device, other than a device classed as fireworks, for use in the entertainment industry. [**1124,** 2006]

3.3.501 Quality Assurance. The procedures conducted by the registered design professionals (RDPs) responsible for design and the registered design professionals responsible for inspection that provide evidence and documentation to the RDPs, the owner, and the authority having jurisdiction that the work is being constructed in accordance with the approved construction documents.

3.3.502 Quality Assurance Plan. Written documentation of the tests, special inspections, and observations to be performed in the quality assurance program.

Copyright National Fire Protection Association
Provided by IHS under license with NFPA
No reproduction or networking permitted without license from IHS
Not for Resale

3.3.503 Quality Assurance Program. A predefined set of observations, special inspections, tests, and other procedures that provide an independent record to the owner, authority having jurisdiction, and RDP responsible for design that the construction is in general conformance with the approved construction documents.

3.3.504 Quality Control Program. The operational procedures provided by the contractors to control the quality of the work and ensure compliance with the approved construction documents.

3.3.505* Ramp. A walking surface that has a slope steeper than 1 in 20. [***101***, 2006]

3.3.506 Rating.

3.3.506.1 ***Fire Protection Rating.*** The designation indicating the duration of the fire test exposure to which a fire door assembly or fire window assembly was exposed and for which it met all the acceptance criteria as determined in accordance with NFPA 252, *Standard Methods of Fire Tests of Door Assemblies*, or NFPA 257, *Standard on Fire Test for Window and Glass Block Assemblies*, respectively. [***101***, 2006]

3.3.506.2 ***Fire Resistance Rating.*** The time, in minutes or hours, that materials or assemblies have withstood a fire exposure as determined by the tests, or methods based on tests, prescribed by this *Code*.

3.3.507 Reconstruction. The reconfiguration of a space that affects an exit, or a corridor shared by more than a single tenant; or reconfiguration of space such that the rehabilitation work area is not permitted to be occupied because existing means of egress and fire protection systems, or their equivalent, are not in place or continuously maintained.

3.3.508* Recreational Vehicle. A vehicle that is built on a single chassis, 400 ft^2 (37 m^2) or less when measured at the largest horizontal projection, designed to be self-propelled or permanently towable by a light-duty truck, and designed primarily not for use as a permanent dwelling but as temporary living quarters for recreational, camping, travel, or seasonal use.

3.3.509 Registered Architect. A person licensed to practice architecture in a jurisdiction, subject to all laws and limitations imposed by the jurisdiction.

3.3.510 Registered Design Professional (RDP). An individual who is registered or licensed to practice his/her respective design profession as defined by the statutory requirements of the professional registration laws of the state or jurisdiction in which the project is to be constructed.

3.3.511 Regular Stage. See 3.3.582.2.

3.3.512 Regulatory Floodway. See 3.3.253, Floodway.

3.3.513 Rehabilitation Work Area. See 3.3.33.12.2.

3.3.514 Reinforced Concrete. See 3.3.114.2.

3.3.515 Renovation. The replacement in kind or strengthening of load-bearing elements; or the refinishing, replacement, bracing, strengthening, or upgrading of existing materials, elements, equipment or fixtures, or both, without reconfiguration of spaces.

3.3.516 Repair. The patching, restoration, or painting of materials, elements, equipment, or fixtures for the purposes of maintaining such materials, elements, equipment, or fixtures in good or sound condition, not including work that is covered by Section 15.10.

3.3.517 Repair Garage. See 3.3.269.3.

3.3.518 Required. Required by this *Code*.

3.3.519 Required Strength. See 3.3.594.3.

3.3.520 Residential Board and Care Occupancy. See 3.3.424.11.

3.3.521 Residential Board and Care Resident. A person who receives personal care and resides in a residential board and care facility.

3.3.522 Residential Dwelling Unit (Accessibility). See 3.3.171.3.

3.3.523 Residential Occupancy. See 3.3.424.12.

3.3.524 Residential Pool. See 3.3.477.3.

3.3.525 Residential Spa. See 3.3.572.3.

3.3.526 Resistance.

3.3.526.1 ***Adjusted Shear Resistance.*** The unadjusted shear resistance multiplied by the shear resistance adjustment factors.

3.3.526.2 ***Corrosion Resistance.*** The ability of a material to withstand deterioration of its surface or its properties when exposed to its environment.

3.3.527 Resistance Factor. See 3.3.206.3.

3.3.528 Restricted Entrance (Accessibility). See 3.3.184.2.

3.3.529 Retaining Wall. See 3.3.644.14.

3.3.530 Roof Assembly. See 3.3.36.3.

3.3.531 Roof Covering. The membrane, which may also be the roof assembly, that resists fire and provides weather protection to the building against water infiltration, wind, and impact.

3.3.532 Roof Structure. See 3.3.601.13.

3.3.533 Rooftop Landing Pad. The entire load-bearing surface intended for the landing, takeoff, and parking of helicopters.

3.3.534 Room.

3.3.534.1 ***Boiler Room.*** Any room with a boiler of 5 horsepower or greater.

3.3.534.2 ***Gas Room.*** A separately ventilated, fully enclosed room in which only compressed gases and associated equipment and supplies are stored or used.

3.3.534.3 ***Guest Room.*** An accommodation combining living, sleeping, sanitary, and storage facilities within a compartment. [***101***, 2006]

3.3.534.4 ***Habitable Room.*** A room in a residential occupancy used for living, sleeping, cooking, and eating, but excluding bath, storage and service area, and corridors.

3.3.534.5 ***Hazardous Production Material (HPM) Room.*** A room used in conjunction with or serving a semiconductor fabrication facility where HPM is stored or used and that is classified as Protection Level 2, Protection Level 3, or Protection Level 4.

3.3.534.6 ***Liquid Storage Room.*** A room used for the storage of flammable or combustible liquids in a closed condition that satisfies the requirements of this *Code* for high hazard Level 3 contents.

Copyright National Fire Protection Association
Provided by IHS under license with NFPA
No reproduction or networking permitted without license from IHS
Not for Resale

3.3.535 Safety Factor. See 3.3.206.4.

3.3.536 Safety Margin. The difference between a predicted value and the actual value where a fault condition is expected. [***101,*** 2006]

3.3.537 Sally Port (Security Vestibule). A compartment provided with two or more doors where the intended purpose is to prevent continuous and unobstructed passage by allowing the release of only one door at a time. [***101,*** 2006]

3.3.538 Seating.

3.3.538.1* *Festival Seating.* A form of audience/spectator accommodation in which no seating, other than a floor or ground surface, is provided for the audience/spectators gathered to observe a performance. [***101,*** 2006]

3.3.538.2 *Folding and Telescopic Seating.* A structure that is used for tiered seating of persons and whose overall shape and size can be reduced, without being dismantled, for purposes of moving or storing. [**102,** 1995]

3.3.538.3 *Smoke-Protected Assembly Seating.* Seating served by means of egress that is not subject to smoke accumulation within or under the structure.

3.3.539 Seismic Design Category. A classification assigned to a structure based on its Occupancy Category and the severity of the design earthquake ground motion at the site as defined in ASCE/SEI 7, Section 11.4. [**ASCE/SEI 7:**11.2]

3.3.540 Seismic Forces. The assumed forces prescribed herein, related to the response of the structure to earthquake motions, to be used in the design of the structure and its components. [**ASCE/SEI 7:**11.2]

3.3.541 Self-Closing. Equipped with an approved device that ensures closing after opening. [***101,*** 2006]

3.3.542* Self-Luminous. Illuminated by a self-contained power source and operated independently of external power sources.

3.3.543* Self-Preservation (Day-Care Occupancy). The ability of a client to evacuate a day-care occupancy without direct intervention by a staff member. [***101,*** 2006]

3.3.544 Self-Service Storage Facility (Accessibility). See 3.3.204.9.

3.3.545 Sensitivity Analysis. See 3.3.30.1.

3.3.546 Separate Atmosphere. See 3.3.40.2.

3.3.547 Separated Occupancy. See 3.3.424.13.

3.3.548 Service Corridor. A fully enclosed passage used for transporting HPM and for purposes other than required means of egress.

3.3.549 Service Entrance (Accessibility). See 3.3.184.3.

3.3.550 Severe Mobility Impairment. The ability to move to stairs but without the ability to use the stairs. [***101,*** 2006]

3.3.551 Shaft. An enclosed space extending through one or more stories and connecting vertical openings through two or more successive floors of a building or through floors and roof.

3.3.552 Shear Wall. See 3.3.644.15.

3.3.553 Sign (Accessibility). An architectural element composed of displayed text or numbers or symbolic, tactile, or pictorial information.

3.3.554 Single Station Alarm. See 3.3.23.1.

3.3.555 Site (Accessibility). A parcel of land bounded by a property line or a designated portion of a public right-of-way.

3.3.556 Site Class. A classification assigned to a site based on the types of soils present and their engineering properties as defined in ASCE/SEI 7 Section 20. [**ASCE/SEI 7:**11.2]

3.3.557 Skywalk Bridge. Any elevated bridge-like structure connecting two buildings and primarily designed for pedestrian use.

3.3.558 Sleeping Suite (Health Care Occupancies). See 3.3.605.2.2.

3.3.559 Sloped Glazing. See 3.3.276.2.

3.3.560 Smoke Alarm. See 3.3.23.2.

3.3.561 Smoke Barrier. See 3.3.47.2.

3.3.562 Smoke Compartment. See 3.3.107.2.

3.3.563 Smoke Damper. See 3.3.133.4.

3.3.564 Smoke Detector. A device that detects visible or invisible particles of combustion. [***72,*** 2002]

3.3.565 Smoke Developed Index. See 3.3.332.2.

3.3.566 Smoke Partition. See 3.3.453.2.

3.3.567 Smokeproof Enclosure. See 3.3.182.2.

3.3.568 Smoke-Protected Assembly Seating. See 3.3.538.3.

3.3.569 Solid Masonry Unit. A masonry unit whose net cross-sectional area in every plane parallel to the bearing surface is 75 percent or more of its gross cross-sectional area measured in the same plane. [**97,** 2003]

3.3.570 Solid Material. See 3.3.388.14.

3.3.571 Soundstage. A building or a portion of a building, usually insulated from outside noise and natural light, used by the entertainment industry for the purpose of motion picture, television, or commercial productions. [**140,** 2004]

3.3.572 Spa. A hydrotherapy unit, including, but not limited to, a therapeutic or hydrotherapy pool, whirlpool, or hot tub, with a maximum water depth of 48 in. (1220 mm) that might have a therapeutic use but is not drained, cleaned, or refilled for each individual use.

3.3.572.1 *Portable Spa.* A spa that is not permanent and in which the water circulating equipment can be either an integral or nonintegral part of the product.

3.3.572.2 *Public Spa.* Any spa which is intended to be used for bathing and is operated by an owner, licensee, or concessionaire, regardless of whether a fee is charged for use.

3.3.572.3* *Residential Spa.* A permanent spa in which the water heating and water circulation equipment is not an integral part of the product.

3.3.573 Space (Accessibility). A definable area, such as a room, toilet room, hall, assembly area, entrance, storage room, alcove, courtyard, or lobby.

3.3.573.1 *Wheelchair Space (Accessibility).* The space for a single wheelchair and its occupant.

3.3.574 Special Amusement Building. See 3.3.65.16.

3.3.575 Special Flood Hazard Area. See 3.3.33.7.1.

Copyright National Fire Protection Association
Provided by IHS under license with NFPA
No reproduction or networking permitted without license from IHS
Not for Resale

3.3.576 Special Industrial Explosive Device (SIED). See 3.3.160.2.

3.3.577 Special Inspection. Inspection performed by inspection agents under the direction of the registered design professional responsible for inspection to ensure conformance to the approved construction documents, not including inspection required by Chapter 1.

3.3.578 Special-Purpose Industrial Occupancy. See 3.3.424.7.2.

3.3.579 Specification.

3.3.579.1* ***Design Specification.*** A building characteristic and other conditions that are under the control of the design team.

3.3.579.2 ***Input Data Specification.*** Information required by the verification method. [***101,*** 2006]

3.3.580 Sprayed Fire-Resistive Material. See 3.3.388.15.

3.3.581 Staff (Residential Board and Care). Persons who provide personal care services, supervision, or assistance. [***101,*** 2006]

3.3.582 Stage. A space within a building used for entertainment and utilizing drops or scenery or other stage effects. [***101,*** 2006]

3.3.582.1 ***Legitimate Stage.*** A stage with a height greater than 50 ft (15 m) measured from the lowest point on the stage floor to the highest point of the roof or floor deck above.

3.3.582.2 ***Regular Stage.*** A stage with a height of 50 ft (15 m) or less measured from the lowest point on the stage floor to the highest point of the deck above.

3.3.583 Stair Descent Device. See 3.3.160.3.

3.3.584 Stairway. One or more flights of stairs and the landings and platforms connecting them, forming a continuous and uninterrupted passage from one story to another in a building or structure.

3.3.585 Stakeholder. An individual, or representative of same, having an interest in the successful completion of a project. [***101,*** 2006]

3.3.586 Standpipe System. See 3.3.608.9.

3.3.587 Start of Construction (Flood Resistance). See 3.3.115.1.

3.3.588 Storage (Material). The keeping, retention, or leaving of hazardous materials in closed containers, tanks, cylinders, or similar vessels; or vessels supplying operations through closed connections to the vessel.

3.3.588.1 ***High-Piled Storage.*** Solid-piled, palletized, rack storage, bin box, and shelf storage in excess of 12 ft (3.7 m) in height. [**13,** 2002]

3.3.589 Storage Occupancy. See 3.3.424.14.

3.3.590 Story. The portion of a building located between the upper surface of a floor and the upper surface of the floor or roof next above.

3.3.590.1 ***Story (Accessibility).*** That portion of a building or facility designed for human occupancy located between the upper surface of a floor and the upper surface of the floor or roof next above. A story containing one or more mezzanines has more than one floor level.

3.3.590.2 ***First Story Above Grade.*** Any story having its finished floor surface entirely above grade, except that a basement shall be considered as a first story above grade where the finished surface of the floor above the basement is (1) more than 6 ft (1830 mm) above grade or (2) more than 6 ft (1830 mm) above the finished ground level for more than 50 percent of the total building perimeter, or (3) more than 12 ft (3660 mm) above the finished ground level at any point.

3.3.590.3* ***Number of Stories.*** The story count starting with the primary level of exit discharge and ending with the highest occupiable level.

3.3.590.4* ***Occupiable Story.*** A story occupied by people on a regular basis.

3.3.591 Story Height. See 3.3.308.2.

3.3.592 Street. A public thoroughfare that has been dedicated for vehicular use by the public and can be used for access by fire department vehicles. [***101,*** 2006]

3.3.593 Street Floor. See 3.3.254.2.

3.3.594 Strength.

3.3.594.1 ***Design Strength.*** The product of the nominal strength and a resistance factor, Φ. [**ASCE/SEI 7:**1.2]

3.3.594.2 ***Nominal Strength.*** (1) In general, the capacity of a structure or member to resist the effects of loads, as determined by computations using specified material strengths and dimensions and formulas derived from accepted principles of structural mechanics or by field tests or laboratory tests of scaled models, allowing for modeling effects and differences between laboratory and field conditions. (2) For the purposes of earthquake loading, strength of a member or cross section calculated in accordance with the requirements and assumptions of the strength design methods of ASCE/SEI 7 (or the referenced standards) before application of any strength reduction factors. [**ASCE/SEI 7:**1.2, 11.2]

3.3.594.3 ***Required Strength.*** Strength of a member, cross section, or connection required to resist factored loads or related internal moments and forces in such combinations as stipulated by ASCE/SEI 7. [**ASCE/SEI 7:**11.2]

3.3.595 Strength Design. See 3.3.146.3.

3.3.596 Structural Element. See 3.3.174.3.

3.3.597 Structural Frame. Frame composed of individual members of a building or structure required to transmit loads to the ground.

3.3.597.1 ***Structural Frame (Accessibility).*** The columns, girders, beams, and trusses having direct connections to the columns and all other members that are essential to the stability of a building or facility as a whole.

3.3.598 Structural Glued Laminated Timber. Any member comprising an assembly of laminations of lumber in which the grain of all laminations is approximately parallel longitudinally, and in which the laminations are bonded with adhesives.

3.3.599 Structural Observation. The periodic observation of the structural portions of construction by the registered design professional (RDP) responsible for design, or another RDP designated by the RDP responsible for design, to determine if the work is proceeding in general conformance to the

Copyright National Fire Protection Association
Provided by IHS under license with NFPA
No reproduction or networking permitted without license from IHS
Not for Resale

approved construction documents and not including, or waiving the requirements for, any inspection required by this *Code*.

3.3.600* Structurally Unsafe.

3.3.601* Structure. That which is built or constructed and limited to buildings and nonbuilding structures as defined herein. [**ASCE/SEI 7:**11.2].

3.3.601.1 ***Structure (Flood Resistance).*** For all matters related to flood-resistant design and construction, a walled and roofed building, a gas or liquid storage tank that is principally above ground, as well as a manufactured home.

3.3.601.2 ***Air-Inflated Structure.*** A structure whose shape is maintained by air pressure in cells or tubes forming all or part of the enclosure of the usable area and in which the occupants are not within the pressurized area used to support the structure.

3.3.601.3 ***Air-Right Structure.*** A structure other than a skywalk bridge that is built over a roadway using the roadway's air rights.

3.3.601.4* ***Air-Supported Structure.*** A structure where shape is maintained by air pressure and in which occupants are within the elevated pressure area.

3.3.601.5* ***Historic Structure.*** A building, bridge, lighthouse, monument, pier, vessel, or other construction that is designated or that is deemed eligible for such designation by a local, regional, or national jurisdiction as having historical, architectural, or cultural significance. [**914,** 2001]

3.3.601.6 ***Limited Access Structure.*** A structure or portion of a structure lacking emergency openings.

3.3.601.7 ***Membrane Structure.*** A building or portion of a building incorporating an air-inflated, air-supported, tensioned-membrane structure; a membrane roof; or a membrane-covered rigid frame to protect habitable or usable space.

3.3.601.8 ***Multilevel Play Structure.*** A structure that consists of tubes, slides, crawling areas, and jumping areas that is located within a building and is used for climbing and entertainment, generally by children. [***101,*** 2006]

3.3.601.9 ***Open Parking Structure.*** A parking structure that, at each parking level, has wall openings open to the atmosphere, for an area of not less than 1.4 ft^2 for each linear foot (0.13 m^2 for each linear meter) of its exterior perimeter. Such openings are distributed over 40 percent of the building perimeter or uniformly over two opposing sides. Interior wall lines and column lines are at least 20 percent open, with openings distributed to provide ventilation. [**88A,** 2002]

3.3.601.10* ***Open Structure.*** A structure that supports equipment and operations not enclosed within building walls.

3.3.601.11 ***Other Structures.*** Structures, other than buildings, for which loads are specified in ASCE/SEI 7. [**ASCE/SEI 7:**1.2]

3.3.601.12 ***Permanent Structure.*** A building or structure that is intended to remain in place for a period of more than 180 days in any consecutive 12-month period.

3.3.601.13 ***Roof Structure.*** Structure above the roof of any part of a building enclosing a stairway, a tank, elevator machinery, service equipment, or part of a shaft extending above the roof, not housing living or recreational accommodations.

3.3.601.14 ***Temporary Structure.*** A building or structure not meeting the definition of permanent structure. *(See also 3.3.601.12, Permanent Structure.)*

3.3.601.15 ***Tensioned-Membrane Structure.*** A membrane structure incorporating a membrane and a structural support system such as arches, columns and cables, or beams wherein the stresses developed in the tensioned membrane interact with those in the structural support so that the entire assembly acts together to resist the applied loads.

3.3.601.16* ***Underground Structure.*** A structure or portions of a structure in which the floor level is below the level of exit discharge.

3.3.601.17 ***Water-Surrounded Structure.*** A structure fully surrounded by water.

3.3.602 Sub-Membrane Depressurization System. See 3.3.608.4.3.

3.3.603 Substantial Damage (Flood Resistance). For buildings and structures located wholly or partly within the flood hazard area, damage of any origin whereby the cost of restoring the building or structure to its pre-damage condition would equal or exceed 50 percent of the market value of the building or structure.

3.3.604 Substantial Improvement (Flood Resistance). For buildings and structures located wholly or partly within the flood hazard area: (1) any repair, addition, reconstruction, rehabilitation, or improvement of the building or structure, the cost of which equals or exceeds 50 percent of the market value of the building or structure before the alteration is started; or (2) if a building or structure has sustained substantial damage, any repairs or reconstruction regardless of the actual work performed. *Substantial improvement* shall not include the following: (1) any project or improvement of a building or structure required to correct existing health, sanitary, or safety code violations identified by the authority having jurisdiction, and that are the minimum necessary to assure safe living conditions; (2) any alteration of a historic building or structure, provided that the alteration will not preclude the continued designation as a historic building or structure.

3.3.605 Suite.

3.3.605.1 ***Guest Suite.*** An accommodation with two or more contiguous rooms comprising a compartment, with or without doors between such rooms, that provides living, sleeping, sanitary, and storage facilities. [***101,*** 2006]

3.3.605.2 ***Suite (Health Care Occupancies).*** A series of rooms or spaces or a subdivided room separated from the remainder of the building by walls and doors.

3.3.605.2.1 ***Non-Sleeping Suite (Health Care Occupancies).*** A suite without patient beds intended for overnight sleeping.

3.3.605.2.2 ***Sleeping Suite (Health Care Occupancies).*** A suite containing one or more patient beds intended for overnight sleeping.

3.3.606 Surface.

3.3.606.1 ***Exterior Surface.*** A weather-exposed surface.

3.3.606.2 ***Interior Surface.*** A surface other than a weather-exposed surface.

Copyright National Fire Protection Association
Provided by IHS under license with NFPA
No reproduction or networking permitted without license from IHS
Not for Resale

3.3.606.3* ***Weather-Exposed Surface.*** The surface of walls, ceilings, roofs, soffits, and similar surfaces exposed to the weather.

3.3.607 Swimming Pool. See 3.3.477.4.

3.3.608 System.

3.3.608.1 ***Assistive Listening System (ALS) (Accessibility).*** An amplification system utilizing transmitters, receivers, and coupling devices to bypass the acoustical space between a sound source and a listener by means of induction loop, radio frequency, infrared, or direct-wired equipment.

3.3.608.2 ***Bearing Wall System.*** A structural system with bearing walls providing support for all or major portions of the vertical loads. Shear walls or braced frames provide seismic force resistance. [**ASCE/SEI 7:**11.2]

3.3.608.3 ***Continuous Gas Detection System.*** A gas detection system where the instrument is maintained in continuous operation and the interval between sampling of any point does not exceed 30 minutes.

3.3.608.4 ***Depressurization System.***

3.3.608.4.1 ***Active Sub-Slab Depressurization System.*** A system designed to achieve lower sub-slab air pressure relative to indoor air pressure by use of a fan-powered vent drawing air from beneath the slab.

3.3.608.4.2 ***Passive Sub-Slab Depressurization System.*** A system designed to achieve lower sub-slab air pressure relative to indoor air pressure by use of a vent pipe routed through the conditioned space of a building and connecting the sub-slab area with outdoor air, thereby relying on the convective flow of air upward in the vent to draw air from beneath the slab.

3.3.608.4.3 ***Sub-Membrane Depressurization System.*** A system designed to achieve lower sub-membrane air pressure relative to crawl space air pressure by use of a vent drawing air from beneath the soil-gas retarder membrane.

3.3.608.5 ***Elevator Evacuation System.*** A system, including a vertical series of elevator lobbies and associated elevator lobby doors, an elevator shaft(s), and a machine room(s), that provides protection from fire effects for elevator passengers, people waiting to use elevators, and elevator equipment so that elevators can be used safely for egress. [***101,*** 2006]

3.3.608.6 ***Emergency Alarm System.*** A system to provide indication and warning of emergency situations involving hazardous materials and summon appropriate aid.

3.3.608.7 ***Reserved.***

3.3.608.8* ***Light-Diffusing System.*** Panels, grids, baffles, or lenses made with light-transmitting plastics, positioned below independently mounted electrical light sources, skylights, or light-transmitting roof panels.

3.3.608.9 ***Standpipe System.*** An arrangement of piping, valves, hose connections, and allied equipment installed in a building or structure, with the hose connections located in such a manner that water can be discharged in streams or spray patterns through attached hose and nozzles, for the purpose of extinguishing a fire, thereby protecting a building or structure and its contents in addition to protecting the occupants. This is accomplished by means of connections to water supply systems or by means of pumps, tanks, and other equipment necessary to provide an adequate supply of water to the hose connections. [**14,** 2003]

3.3.609 Tactile (Accessibility). Describes an object that can be perceived by using the sense of touch.

3.3.610 Tank. A structure above grade that encloses a volume that either holds bulk solids or liquids or simulates that.

3.3.611 Technically Infeasible. A change to a building that has little likelihood of being accomplished because the existing structural conditions require the removal or alteration of a load-bearing member that is an essential part of the structural frame, or because other existing physical or site constraints prohibit modification or addition of elements, spaces, or features that are in full and strict compliance with applicable requirements.

3.3.611.1 ***Technically Infeasible (Accessibility).*** With respect to an alteration of a building or a facility, a change to a building that has little likelihood of being accomplished because existing structural conditions would require removing or altering a load-bearing member that is an essential part of the structural frame, or because other existing physical or site constraints prohibit modification or addition of elements, spaces, or features that are in full and strict compliance that the minimum requirement for alterations and that are necessary to provide accessibility.

3.3.612 Temporary. Any object that is in place for a period of 180 consecutive days or less. *(See also 3.3.601.14, Temporary Structure.)*

3.3.613 Temporary Facilities. See 3.3.204.10.

3.3.614 Temporary Platform. See 3.3.473.1.

3.3.615 Temporary Structure. See 3.3.601.14.

3.3.616 Tensioned-Membrane Structure. See 3.3.601.15.

3.3.617* Tent. A temporary structure, the covering of which is made of pliable material that achieves its support by mechanical means such as beams, columns, poles, or arches, or by rope or cables, or both.

3.3.617.1 ***Private Party Tent.*** A tent erected in the yard of a private residence for entertainment, recreation, dining, a reception, or similar function.

3.3.618 Terminal.

3.3.618.1 ***Marine Terminal.*** A facility comprised of one or more berths, piers, wharves, loading and unloading areas, warehouses, and storage yards and used for transfer of people and/or cargo between waterborne and land transportation modes. [**307,** 2006]

3.3.618.2* ***Motor Freight Terminal.*** The area where the overall operation of freight transfer, vehicle repair and service, truck parking, and administrative functions are performed.

3.3.619 Thermal Barrier. See 3.3.47.3.

3.3.620 Thermoplastic Material. See 3.3.388.16.

3.3.621 Thermoset Material. See 3.3.388.17.

3.3.622 Through-Penetration. See 3.3.455.2.

3.3.623 Tower. An enclosed independent structure or portion of a building with elevated levels for support of equipment or occupied for observation, control, operation, signaling, or similar limited use.

Copyright National Fire Protection Association
Provided by IHS under license with NFPA
No reproduction or networking permitted without license from IHS
Not for Resale

3.3.624 Townhouse. A one-family dwelling constructed in attached groups of three or more units in which each unit extends from the foundation to the roof and has open space on at least two sides.

3.3.625 Toxic Material. See 3.3.388.18.

3.3.626 Transient Lodging (Accessibility). A building or facility containing one or more guest rooms for sleeping that provides accommodations that are intended primarily for short-term use, not including residential dwelling units intended to be used as a residence, inpatient medical care facilities, licensed long-term care facilities, detention or correctional facilities, private buildings or facilities that contain not more than five rooms for rent or hire, and that are actually occupied by the proprietor as the proprietor's residence.

3.3.627 Transition Plate (Accessibility). A sloping pedestrian walking surface located at the end(s) of a gangway.

3.3.628 TTY (Accessibility). The abbreviation for teletypewriter, machinery that employs interactive text-based communication through the transmission of coded signals across the telephone network, which can include, for example, devices known as TDDs (telecommunication display devices or telecommunication devices for deaf persons) or computers with special modems; also known as text telephones.

3.3.629 Two-Family Dwelling Unit. See 3.3.171.4.

3.3.630 Type I (Segmented) Shear Wall. See 3.3.644.15.1.

3.3.631 Type II (Perforated) Shear Wall. See 3.3.644.15.2.

3.3.632 Type II Shear Wall Segment. A section of shear wall with full-height sheathing and that meets required aspect ratio limits.

3.3.633 Uncertainty Analysis. See 3.3.30.2.

3.3.634 Underground Structure. See 3.3.601.16.

3.3.635 Unstable (Reactive) Material. See 3.3.388.19.

3.3.636 Use.

3.3.636.1 ***Use (Material).*** Placing a solid, liquid, or gaseous material into action or keeping a solid or liquid material in an open vessel.

3.3.636.1.1* ***Closed System Use (Material).*** A solid or liquid hazardous material in a closed vessel or system that remains closed during normal operations where vapors emitted by the product are not liberated outside of the vessel or system and the product is not exposed to the atmosphere during normal operations, and all uses of compressed gases.

3.3.636.1.2* ***Open System Use (Material).*** Use of a solid or liquid hazardous material in a vessel or system that is continuously open to the atmosphere during normal operations and where vapors are liberated, or the product is exposed to the atmosphere during normal operations.

3.3.636.2* ***Change of Use.*** A change in the purpose or level of activity within a structure that involves a change in application of the requirements of the building code.

3.3.636.3 ***Children's Use (Accessibility).*** Spaces and elements specifically designed for use primarily by people 12 years old and younger.

3.3.636.4* ***Common Use (Accessibility).*** Interior or exterior rooms, spaces, or elements that are made available for the use of a restricted group of people.

3.3.636.5* ***Public Use (Accessibility).*** Interior or exterior rooms, spaces, or elements that are made available to the public.

3.3.637 Vapor Retarder. A layer of material or a laminate used to appreciably reduce the flow of water vapor into the roofing system. [**ASTM D 1079:** 2.1]

3.3.637.1 ***Water Vapor Retarder.*** Material or construction that adequately impedes the transmission of water vapor under specified conditions. Water vapor retards have a water vapor permeance of less than 1.0 perm when tested in accordance with ASTM E 96.

3.3.638 Variance (Flood Resistance). A grant of relief from a provision or provisions of this *Code,* which permits construction in a manner that would otherwise be prohibited.

3.3.639 Vehicular Way (Accessibility). See 3.3.650.2.

3.3.640 Veneered Wall. See 3.3.644.16.

3.3.641 Verification Method. A procedure or process used to demonstrate or confirm that the proposed design meets the specified criteria. [***101,*** 2006]

3.3.642 Vertical Opening. See 3.3.437.1.

3.3.643 Walk (Accessibility). An exterior prepared surface for pedestrian use, including pedestrian areas such as plazas and courts.

3.3.644 Wall. A component that has a slope of 60 degrees or greater with the horizontal plane used to enclose or divide space. [**ASCE/SEI 7:**11.2]

3.3.644.1 ***Bearing Wall.*** Any wall meeting either of the following classifications: (1) any metal or wood stud wall that supports more than 100 lb/linear ft (1400 N/linear m) of vertical load in addition to its own weight or (2) any concrete or masonry wall that supports more than 200 lb/linear ft (2900 N/linear m) of vertical load in addition to its own weight. [**ASCE/SEI 7:**11.2]

3.3.644.2 ***Cavity Wall.*** A wall built of masonry units or of plain concrete, or a combination of these materials arranged to provide an air space within the wall and in which the inner and outer wythes of the wall are tied together with metal ties.

3.3.644.3 ***Cripple Wall.*** Short stud wall, less than 8 ft (2.4 m) in height, between the foundation and the lowest framed floors with studs not less than 14 in. (35 mm) long—also known as a knee wall. Cripple walls can occur in both engineered structures and conventional construction. [**ASCE/SEI 7:**11.2]

3.3.644.4 ***Fire Barrier Wall.*** A wall, other than a fire wall, having a fire resistance rating.

3.3.644.5* ***Fire Wall.*** A wall separating buildings or subdividing a building to prevent the spread of fire and having a fire resistance rating and structural stability. [**221,** 2006]

3.3.644.6 ***Foundation Wall.*** A wall below the floor nearest grade that serves as a structural support for a wall, pier, column, or other structural part of a building or structure, or a basement wall that resists lateral soil load.

3.3.644.7 ***Light-Framed Wall.*** A wall with wood or steel studs. [**ASCE/SEI 7:**11.2]

Copyright National Fire Protection Association
Provided by IHS under license with NFPA
No reproduction or networking permitted without license from IHS
Not for Resale

3.3.644.8 ***Light-Framed Wood Shear Wall.*** A wall constructed with wood studs and sheathed with material rated for shear resistance. [**ASCE/SEI 7:**11.2]

3.3.644.9 ***Masonry Bonded Hollow Wall.*** A wall built of masonry units arranged to provide an air space within the wall, in which the inner and outer wythes of the wall are tied together with masonry units.

3.3.644.10 ***Metal Composite Panel Wall.*** Nonbearing wall built between columns and piers wholly supported at each story and comprised of an exterior and interior metal panel housing a foam or other insulating material.

3.3.644.11 ***Nonbearing Wall.*** Any wall that is not a bearing wall. [**ASCE/SEI 7:**11.2]

3.3.644.12 ***Nonstructural Wall.*** All walls other than bearing walls or shear walls. [**ASCE/SEI 7:**11.2]

3.3.644.13 ***Proscenium Wall.*** The wall that separates the stage from the auditorium or house.

3.3.644.14 ***Retaining Wall.*** A wall that is not laterally supported at the top, and is designed to resist lateral soil load.

3.3.644.15 ***Shear Wall.*** A wall, bearing or nonbearing, designed to resist lateral seismic forces acting in the plane of the wall (sometimes referred to as a vertical diaphragm). [**ASCE/SEI 7:**11.2]

3.3.644.15.1 ***Type I (Segmented) Shear Wall.*** A wall designed to resist inplane lateral forces that is fully sheathed and that is provided with hold-down anchors at each end of the wall segment.

3.3.644.15.2* ***Type II (Perforated) Shear Wall.*** A wall designed to resist inplane lateral forces that is sheathed with wood structural panel or sheet steel that contains openings, but that has not been specifically designed and detailed for force transfer around wall openings.

3.3.644.16 ***Veneered Wall.*** A wall having a facing of masonry, plastic, glass, or other material securely attached to the backing but not bonded to exert a common reaction under load.

3.3.645 Wall Height. See 3.3.308.3.

3.3.646 Wall Panel. See 3.3.447.2.

3.3.647 Water Vapor Retarder. See 3.3.637.1.

3.3.648 Water-Reactive Material. See 3.3.388.20.

3.3.649 Water-Surrounded Structure. See 3.3.601.17.

3.3.650 Way.

3.3.650.1 ***Public Way.*** A street, alley, or other similar parcel of land essentially open to the outside air deeded, dedicated, or otherwise permanently appropriated to the public for public use and having a clear width and height of not less than 10 ft (3050 mm). [***101,*** 2006]

3.3.650.2 ***Vehicular Way (Accessibility).*** A route intended for vehicular traffic, such as a street, driveway, or parking lot.

3.3.651 Weathered-Membrane Material. See 3.3.388.21.

3.3.652 Weather-Exposed Surface. See 3.3.606.3.

3.3.653 Wheelchair Space (Accessibility). See 3.3.573.1.

3.3.654 Wildland/Urban Interface. The line, area, or zone where structures and other human development meet or intermingle with undeveloped wildland or vegetative fuels.

3.3.655 Wildland/Urban Intermix. An area where improved property and wildland fuels meet with no clearly defined boundary. [**1144,** 2002]

3.3.656 Window.

3.3.656.1 ***Bay Window.*** A window assembly whose maximum horizontal projection is no more than 2 ft (610 mm) from the plane of an exterior wall and is elevated above the floor level of the home, or a window supported on a foundation extending beyond the main walls of a building.

3.3.656.2 ***Fire Window.*** A window assembly rated in accordance with NFPA 257 and installed in accordance with NFPA 80.

3.3.657 Wood.

3.3.657.1 ***Fire-Retardant-Treated Wood.*** A wood product impregnated with chemical by a pressure process or other means during manufacture, which is tested in accordance with NFPA 255, has a listed flame spread of 25 or less, and shows no evidence of significant progressive combustion when the test is continued for an additional 20-minute period; nor does the flame front progress more than 10.5 ft (3.2 m) beyond the centerline of the burners at any time during the test.

3.3.657.2 ***Preservative-Treated Wood.*** Wood impregnated under pressure with compounds that reduce their susceptibility to deterioration caused by fungi, insects, or marine borers.

3.3.658 Wood Structural Panel. See 3.3.447.3.

3.3.659 Work Area. See 3.3.33.12.

3.3.660 Work Area Equipment (Accessibility). For the purposes of this *Code*, any machine, instrument, engine, motor, pump, conveyor, or other apparatus used to perform work that is permanently installed or built-in within employee work areas, not including passenger elevators and other accessible means of vertical transportation.

3.3.661* Workstation. A defined space or an independent, principal piece of equipment using hazardous chemicals within a cleanroom or clean zone, where a specific function, a laboratory procedure, or a research activity occurs. [**318,** 2006]

3.3.662 Written Notice. A notification in writing delivered in person to the individual or parties intended, or delivered at, or sent by certified or registered mail to, the last residential or business address of legal record. [**1,** 2006]

3.3.663 Yard. An open, unoccupied space, other than a court, unobstructed from the ground to the sky on the lot on which a building is situated. [***101,*** 2006]

Chapter 4 General

4.1* Goals and Objectives.

4.1.1* Goals. The primary goals of this *Code* are safety, health, building usability, and public welfare, including property protection as it relates to the primary goals.

Copyright National Fire Protection Association
Provided by IHS under license with NFPA
No reproduction or networking permitted without license from IHS
Not for Resale

4.1.2* Objectives. To achieve the goals stated in 4.1.1, the goals and objectives of 4.1.3 through 4.1.6 shall be satisfied.

4.1.3 Safety. The intent of the safety goal of this *Code* is to reduce the probability of injury or death from fire, structural failure, and building use.

4.1.3.1 Safety from Fire.

4.1.3.1.1* Safety from Fire Goal. The fire safety goal of this *Code* is as follows:

(1) To provide an environment for the occupants inside or near a building that is reasonably safe from fire and similar emergencies
(2) To provide reasonable safety for fire fighters and emergency responders during search and rescue operations

4.1.3.1.2 Safety from Fire Objectives.

4.1.3.1.2.1 Buildings shall be designed and constructed to protect occupants not intimate with the initial fire development for the time needed to evacuate, relocate, or defend in place.

4.1.3.1.2.2* Buildings shall be designed and constructed to provide reasonable safety for fire fighters and emergency responders during search and rescue operations.

4.1.3.1.2.3 Buildings shall be designed and constructed to reasonably protect adjacent persons and buildings from injury, death, or substantial damage as a result of a fire.

4.1.3.1.2.4 Buildings shall be designed and constructed to provide reasonable access to the building for emergency responders.

4.1.3.2 Safety from Structural Failure.

4.1.3.2.1* Safety from Structural Failure Goals. The safety from structural failure goals of this *Code* are to provide a high confidence of a low probability of structural failure resulting in local or global collapse, or the creation of falling debris hazards that could threaten life under any load or combination of loads that the structure could reasonably be anticipated to experience, and to provide a high confidence that the structure will be capable of resisting regularly occurring loads and combinations of loads without significant damage or degradation.

4.1.3.2.2 Safety from Structural Failure Objectives.

4.1.3.2.2.1* Buildings shall be designed and constructed to withstand the loads specified in Chapter 35 or, for existing buildings, Chapter 15, without damage or excessive deformation or deflection.

4.1.3.2.2.2* Buildings and their components shall be designed and constructed such that there is a low likelihood of failure under the extreme levels of live, earthquake, rain, flood, ice, impact, soil and hydrostatic pressure, snow, and wind loads that are anticipated to occur during the building life.

4.1.3.2.2.3 Buildings and building components shall be designed and constructed to reasonably protect pedestrians and persons in adjacent buildings or structures from injury or death as a result of a structural failure.

4.1.3.3 Safety During Building Use.

4.1.3.3.1* Safety During Building Use Goal. The safety during building use goal of this *Code* is to provide an environment for the occupants of the building that is reasonably safe during the normal use of the building.

4.1.3.3.2 Safety During Building Use Objectives.

4.1.3.3.2.1 Buildings shall be designed and constructed to reduce the probability of death or injury to occupants from falls during normal use.

4.1.3.3.2.2 Buildings shall be designed and constructed to provide for reasonably safe crowd movement during emergency and nonemergency conditions.

4.1.3.3.2.3 Buildings shall be designed and constructed to provide reasonable safety for occupants and workers during construction and demolition.

4.1.3.3.2.4 Buildings shall be designed and constructed to provide reasonable notification to occupants of emergency situations.

4.1.3.3.2.5 Buildings shall be designed and constructed to provide reasonable signage to identify hazards, means of egress, and other building safety features.

4.1.3.3.2.6 Buildings shall be designed and constructed to provide reasonable safety from occupants coming in contact with glazing or similar frangible construction materials during normal use of the building.

4.1.3.4 Safety from Hazardous Materials. Facilities containing high hazard contents shall have the goal of protecting people and property from the consequences of unauthorized discharges, fires, and explosions involving hazardous materials. Designs shall minimize the risk of such events and shall minimize the consequences of such events if they occur.

4.1.4 Health. The intent of the health goal of this *Code* is to reduce the probability of an illness or injury caused by the indoor environment, vibrations and noise, surface water, release of hazardous materials, uncontrolled moisture, inadequate light, or inadequate sanitation facilities.

4.1.4.1 Interior Environment.

4.1.4.1.1* Interior Environment Goal. The interior environment goal of this *Code* is to provide an environment for occupants of the building that is reasonably safe from contaminants in the interior environment during normal use of the building.

4.1.4.1.2 Interior Environment Objectives.

4.1.4.1.2.1 Buildings shall be designed and constructed to reduce the probability of levels of airborne contaminants in the interior air that could cause illness or injury to the occupants.

4.1.4.1.2.2 Buildings shall be designed and constructed to provide reasonable levels of air, temperature, and moisture to reduce the probability of illness for occupants.

4.1.4.2 Surface Water Entry.

4.1.4.2.1 Surface Water Entry Goal. The surface water entry goal of this *Code* is to prevent surface water from unreasonably affecting the health and safety of occupants.

4.1.4.2.2 Surface Water Entry Objective. Buildings shall be designed and constructed to prevent surface water from entering or accumulating, unless the building is specifically designed and constructed to accommodate surface water entry.

--`,,```,,,,````-`-`,,`,,`,`,,`---

Copyright National Fire Protection Association
Provided by IHS under license with NFPA
No reproduction or networking permitted without license from IHS
Not for Resale

4.1.4.3 Control of Contaminants.

4.1.4.3.1 Control of Contaminants Goal. The control of contaminants goal of this *Code* is to provide an environment for the occupants of the building that is as follows:

(1) Reasonably safe from substances that could constitute a hazard to the health of the occupants
(2) Reasonably free of unwanted odors and uncontrolled moisture

4.1.4.3.2 Control of Contaminants Objective. Buildings shall be designed and constructed to reduce concentrations of contaminants, unwanted odors, and uncontrolled moisture, during normal use of the building, to quantities that do not unreasonably affect the health and safety of, or irritate a substantial portion of, the occupants.

4.1.4.4 Lighting.

4.1.4.4.1 Lighting Goal. The lighting goal of this *Code* is to provide an environment for the occupants of the building that offers reasonable illumination, either natural, artificial, or both, to reduce the probability of an illness or injury.

4.1.4.4.2 Lighting Objectives.

4.1.4.4.2.1 Buildings shall be designed and constructed to provide natural or artificial light in all spaces of the building at reasonable levels to reduce the probability of illness or injury to occupants.

4.1.4.4.2.2 Habitable spaces in buildings shall be designed and constructed to provide reasonable levels of natural light to reduce the probability of illness or injury to occupants.

4.1.4.5 Sanitation.

4.1.4.5.1* Sanitation Goal. The sanitation goal of this *Code* is to reduce the probability of illness caused by insufficient sanitation or personal hygiene facilities.

4.1.4.5.2 Sanitation Objective. Buildings shall be designed and constructed with reasonable sanitary facilities for personal hygiene so as to reduce the probability of illness for occupants of the building.

4.1.4.6 Uncontrolled Moisture.

4.1.4.6.1 Uncontrolled Moisture Goal. The uncontrolled moisture goal of this *Code* is to provide an interior environment reasonably free of moisture that adversely affects the health of the occupants.

4.1.4.6.2 Uncontrolled Moisture Objectives.

4.1.4.6.2.1 Buildings shall be designed and constructed to control precipitation entering the exterior envelope of the building to quantities that do not unreasonably affect the health of the occupants.

4.1.4.6.2.2 Buildings shall be designed and constructed to control water vapor entering the exterior envelope of the building or concealed spaces within the building to quantities that do not unreasonably affect the health of the occupants.

4.1.4.6.2.3 Buildings shall be designed and constructed to control moisture or leaks occurring within the building to quantities that do not unreasonably affect the health of the occupants.

4.1.5 Usability Goal. The intent of the usability goal of this *Code* is to reduce the probability that all potential occupants of a building are unreasonably impeded in the access to, or the reasonable use of, a building, consistent with its normal function, and that the building is capable of functioning at the level for which it was designed.

4.1.5.1 Accessibility.

4.1.5.1.1 Accessibility Goal. The intent of the accessibility goal of this *Code* is to ensure that all persons, including those with physical or sensory limitations, have reasonable access to a building and the facilities it contains.

4.1.5.1.2 Accessibility Objective. Buildings shall be designed and constructed to provide reasonable access to the building and its facilities for all persons, including those with physical or sensory limitations.

4.1.5.2 Barrier-Free Use.

4.1.5.2.1 Barrier-Free Use Goal. The intent of the barrier-free use goal of this *Code* is to ensure that all persons, including those with physical or sensory limitations, are not unreasonably impeded from circulation within a building and have reasonable use of facilities within a building.

4.1.5.2.2 Barrier-Free Use Objectives.

4.1.5.2.2.1 Buildings shall be designed and constructed to provide reasonable circulation within the building for all persons, including those with physical or sensory limitations.

4.1.5.2.2.2 Buildings shall be designed and constructed to provide reasonable use of facilities within the building for all persons, including those with physical or sensory limitations.

4.1.5.3 Function.

4.1.5.3.1* Function Goal. The intent of the function goal of this *Code* is to ensure that a building and its systems, features, and construction, throughout its life, provide reasonable capability of operation to satisfy the other goals of this *Code*.

4.1.5.3.2* Function Objective. Buildings shall be designed and constructed to provide reasonable assurance that its systems, features, and construction are capable of performing their intended use to satisfy the objectives of this *Code*.

4.1.6* Public Welfare. The intent of the public welfare goal of this *Code* is to ensure that the design, construction, and operation of the building is consistent with the reasonable expectations of society with respect to energy efficiency, cultural heritage preservation, mission continuity, and environment.

4.1.6.1 Energy Efficiency.

4.1.6.1.1 Energy Efficiency Goal. The energy efficiency goal of this *Code* is to ensure that a building, in its design, construction, and operation, utilizes energy efficiently.

4.1.6.1.2 Energy Efficiency Objective. Buildings shall be designed and constructed to be reasonably efficient in the use of energy from depletable sources.

4.1.6.2* Cultural Heritage.

4.1.6.2.1 Cultural Heritage Goal. The cultural heritage goal of this *Code* is to ensure that reasonable care in design and construction is provided to preserve the original quality or character of a historic building, structure, or site.

4.1.6.2.2 Cultural Heritage Objective. Buildings shall be designed and constructed to reasonably preserve the original quality or character of a historic building, structure, or site.

--`,,```,,,,````-`-`,,`,,`,`,,`---

Copyright National Fire Protection Association
Provided by IHS under license with NFPA
No reproduction or networking permitted without license from IHS
Not for Resale

4.1.6.3 Mission Continuity.

4.1.6.3.1* Mission Continuity Goal. The mission continuity goal of this *Code* is to maintain a high probability that the building continues to perform the function for which it is intended following a fire, an earthquake, a flood, and other internal or external events.

4.1.6.3.2* Mission Continuity Objective. Buildings that provide a public welfare role for a community shall be designed and constructed to provide reasonable assurance of continued function following a fire, an earthquake, a flood, and other internal or external events.

4.1.6.4 Environment.

4.1.6.4.1 Environment Goal. The environment goal of this *Code* is to ensure that a building, in its design and construction, does not impact the environment in an unreasonably negative manner.

4.1.6.4.2* Environment Objective. Buildings shall be designed and constructed to reasonably ensure that the probability of harm to the external environment surrounding the building is minimized.

4.2* Assumption — Single Fire Source. The fire protection methods of this *Code* assume that multiple simultaneous fire incidents will not occur, but this assumption shall not preclude the evaluation of multiple design fire scenarios, as required by Section 5.5 for performance-based designs.

4.3 Building Design and Life Safety Compliance Options.

4.3.1 Options. Building design meeting the goals and objectives of Section 4.1 shall be provided in accordance with either of the following:

(1) Prescriptive-based provisions of 4.3.2
(2) Performance-based provisions of 4.3.3

4.3.2 Prescriptive-Based Option.

4.3.2.1 A prescriptive-based building design shall be in accordance with Chapters 1 through 4 and Chapters 6 through 55.

4.3.2.2 Prescriptive-based designs meeting the requirements of Chapters 1 through 3, Sections 4.4 through 4.6, and Chapters 6 through 55 shall be deemed to satisfy the provisions of Section 4.1.

4.3.2.3 Where specific requirements contained in Chapters 15 through 55 differ from general requirements contained in Chapters 1 through 4 and Chapters 6 through 14, the requirements of Chapters 15 through 55 shall govern.

4.3.3 Performance-Based Option.

4.3.3.1 A performance-based building design shall be in accordance with Chapters 1 through 5.

4.3.3.2 Prescriptive requirements shall be permitted to be used as part of the performance approach, if, in conjunction with the performance features, they meet the overall goals and objectives of this *Code*.

4.4 Fundamental Fire and Life Safety Requirements.

4.4.1* Multiple Safeguards. The design of every building or structure intended for human occupancy shall be such that reliance for property protection and safety to life does not depend solely on any single safeguard. An additional safeguard(s) shall be provided for property protection and life safety in case any single safeguard is ineffective due to inappropriate human actions, building failure, or system failure.

4.4.2 Appropriateness of Safeguards. Every building or structure shall be provided with means of egress and other fire and life safety safeguards of the kinds, numbers, locations, and capacities appropriate to the individual building or structure, with due regard to the following:

(1) Character of the occupancy, including fire load
(2) Capabilities of the occupants
(3) Number of persons exposed
(4) Fire protection available
(5) Capabilities of response personnel
(6) Height and type of construction of the building or structure
(7) Other factors necessary to provide occupants with a reasonable degree of safety
(8) Other factors necessary to protect the building and contents from unacceptable damage

4.4.3 Means of Egress.

4.4.3.1 Number of Means of Egress. Two means of egress, as a minimum, shall be provided in every building or structure, section, and area where size, occupancy, and arrangement endanger occupants attempting to use a single means of egress that is blocked by fire or smoke. The two means of egress shall be arranged to minimize the possibility that both might be rendered impassable by the same emergency condition.

4.4.3.2 Unobstructed Egress. In every occupied building or structure, means of egress from all parts of the building shall be maintained free and unobstructed. Means of egress shall be accessible to the extent necessary to ensure reasonable safety for occupants with impaired mobility.

4.4.3.3 Awareness of Egress System. Every exit shall be clearly visible, or the route to reach every exit shall be conspicuously indicated. Each means of egress, in its entirety, shall be arranged or marked so that the way to a place of safety is indicated in a clear manner.

4.4.3.4 Lighting. Where artificial illumination is needed in a building or structure, egress facilities shall be included in the lighting design.

4.4.4* Occupant Notification. In every building or structure of such size, arrangement, or occupancy that a fire itself might not provide adequate occupant warning, fire alarm systems shall be provided where necessary to warn occupants of the existence of fire.

4.4.5 Vertical Openings. Every vertical opening between the floors of a building shall be suitably enclosed or protected, as necessary, to provide the following:

(1) Reasonable safety to occupants while using the means of egress by preventing spread of fire, smoke, or fumes through vertical openings from floor to floor to allow occupants to complete their use of the means of egress
(2) Limitation of damage to the building and its contents

4.4.6 System Design/Installation. Any fire protection system, building service equipment, feature of fire protection, or safeguard provided to achieve the goals of this *Code* shall be designed, installed, and approved in accordance with appropriate codes and standards.

--`,,```,,,,````-`-`,,`,,`,`,,`---

Copyright National Fire Protection Association
Provided by IHS under license with NFPA
No reproduction or networking permitted without license from IHS
Not for Resale

4.4.7 Limiting Fire Spread.

4.4.7.1 Interior Finishes. The interior surfaces of the building shall not contribute to an unacceptable rate and magnitude of fire spread and generation of heat and smoke.

4.4.7.2 Concealed Spaces. The construction of concealed spaces shall not contribute to an unacceptable rate of the spread of fire, hot gases, and smoke to areas of the building remote from the fire source and shall limit their spread beyond the immediate area of the origin of the fire.

4.4.7.3 Compartmentation. The building shall be compartmented, as appropriate, by walls and floors, including their associated openings with proper closures, to limit the spread of fire, hot gases, and smoke to an acceptable area beyond the immediate area of fire origin.

4.4.8 Structural Integrity. The building's structural members and assemblies shall be provided with the appropriate degree of fire resistance to limit structural damage to an acceptable level and to limit damage to the building and its contents and to adjacent buildings and property.

4.4.9 Maintenance. Whenever or wherever any device, equipment, system, condition, arrangement, or level of protection, or any other feature, is required for compliance with the provisions of this *Code*, such device, equipment, system, condition, arrangement, level of protection, or other feature shall thereafter be maintained, unless the *Code* exempts such maintenance.

4.5 General Requirements.

4.5.1 Authority Having Jurisdiction.

4.5.1.1 The authority having jurisdiction shall determine whether the provisions of this *Code* are met.

4.5.1.2 Where it is evident that a reasonable degree of safety is provided, any requirement shall be permitted to be modified if its application would be hazardous under normal occupancy conditions in the judgment of the authority having jurisdiction.

4.5.2 Historic Buildings. See Chapter 15.

4.5.3 Provisions in Excess of *Code* Requirements. Nothing in this *Code* shall be construed to prohibit a superior type of building construction, an additional means of egress, or an otherwise safer condition than that specified by the minimum requirements of this *Code*.

4.5.4 Conditions for Occupancy.

4.5.4.1 No new construction or existing building shall be occupied in whole or in part in violation of the provisions of this *Code,* unless the following conditions exist:

(1) A plan of correction has been approved.
(2) The occupancy classification remains the same.
(3) No serious life safety hazard exists, as judged by the authority having jurisdiction.

4.5.4.2 Where compliance with this *Code* is effected by means of a performance-based design, the owner shall annually certify compliance with the conditions and limitations of the design by submitting a warrant of fitness acceptable to the authority having jurisdiction. The warrant of fitness shall attest that the building features, systems, and use have been inspected and confirmed as still consistent with design specifications outlined in the documentation required by Section 5.8 and that they continue to satisfy the goals and objectives specified in Section 4.1. *(See Chapter 5.)*

4.5.5 Construction, Repair, and Improvement Operations.

4.5.5.1 Buildings or portions of buildings shall be permitted to be occupied during construction, repair, or alteration, or during construction of additions, where required means of egress, required fire protection features, and other health and safety features necessary for the protection of occupants and the general public are in place and continuously maintained for the portion occupied, or where alternative life safety measures and building protection measures acceptable to the authority having jurisdiction are in place.

4.5.5.2 In buildings under construction, adequate escape facilities shall be maintained at all times for the use of construction workers. Escape facilities shall consist of doors, walkways, stairs, ramps, fire escapes, ladders, or other approved means or devices arranged in accordance with the general principles of the *Code,* insofar as they can reasonably be applied to buildings under construction.

4.5.5.3 Flammable or explosive substances or equipment for repairs or alterations shall be permitted in a building while the building is occupied, if the condition of use and safeguards provided do not create any additional danger or impediment to egress beyond the conditions normally permitted in the building.

4.5.6* Changes of Use. Changes of use, including change of occupancy, shall be in accordance with Chapter 15.

4.5.7 Wildland/Urban Interface or Wildland/Urban Intermix. Buildings or structures located in a wildland/urban interface or wildland/urban intermix shall comply with this *Code* and NFPA 1144, *Standard for Protection of Life and Property from Wildfire.*

4.5.8 Maintenance and Testing.

4.5.8.1 Whenever or wherever any device, equipment, system, condition, arrangement, or level of protection, or any other feature, is required for compliance with the provisions of this *Code*, such device, equipment, system, condition, arrangement, level of protection, or other feature shall thereafter be continuously maintained in accordance with applicable NFPA requirements or requirements developed as part of a performance-based design, or as directed by the authority having jurisdiction.

4.5.8.2 Equipment requiring periodic testing or operation to ensure its maintenance shall be tested or operated as specified elsewhere in this *Code* or as directed by the authority having jurisdiction.

4.5.8.3 Maintenance and testing shall be under the supervision of a responsible person who shall ensure that testing and maintenance are made at specified intervals in accordance with applicable NFPA standards or as directed by the authority having jurisdiction.

4.5.9 Buildings and Structures in Flood Hazard Areas. The provisions of Chapter 39 shall apply to new and existing buildings and structures located wholly or partly within flood hazard areas.

4.6 Roof Access.

4.6.1 Structures shall provide means of access to the roof in accordance with Section 4.6 in cases where the roof is flat, or the roof has a pitch less than 3 in 12, and the structure either is four or more stories in height or the roof is 40 ft (12 m) or

Copyright National Fire Protection Association
Provided by IHS under license with NFPA
No reproduction or networking permitted without license from IHS
Not for Resale

more above grade for more than 50 percent of the building perimeter.

4.6.2 Where required by 4.6.1, at least one means of access to the roof shall be provided. Additional access shall be provided at the rate of one access for each 100,000 ft^2 (9300 m^2) of roof area.

4.6.3 Where roof access is required, at least one means of access shall be provided by stairs complying with 11.2.2.3. Additional roof access using ladders in accordance with 11.2.9 shall be permitted.

4.6.4* Where roof access is required, such access shall be provided with a door that is readily operable from both sides by fire department personnel.

Chapter 5 Performance-Based Option

5.1* General Requirements.

5.1.1 Application. The requirements of this chapter shall apply to buildings or structures, portions of buildings or structures, or building systems designed to the performance-based option permitted by Section 4.3.

5.1.2 Goals and Objectives. The performance-based design shall meet the goals and objectives of Section 4.1.

5.1.3* Independent Review. The authority having jurisdiction shall be permitted to require an approved, independent third party to review the proposed design and provide an evaluation of the design to the authority having jurisdiction at the expense of the owner.

5.1.4 Sources of Data. Data sources shall be identified and documented for each input data requirement that must be met using a source other than a design scenario, an assumption, or a building design specification. The degree of conservatism reflected in such data shall be specified, and a justification for the source shall be provided.

5.1.5* Final Determination. The authority having jurisdiction shall make the final determination as to whether the performance objectives have been met.

5.1.6* Maintenance of Design Features.

5.1.6.1 The design features required for the building to continue to meet the performance goals and objectives of this *Code* shall be maintained for the life of the building. Such performance goals and objectives shall include complying with all documented assumptions and design specifications. Any variations shall require the approval of the authority having jurisdiction prior to the actual change.

5.1.6.2 Whenever or wherever any device, equipment, system, condition, arrangement, level of protection, or other feature is required to meet the goals, objectives, or performance criteria of this *Code*, approved procedures for the operation and maintenance of such device, equipment, system, condition, arrangement, level of protection, or other feature shall be prepared, and an approved system of inspection, maintenance, and testing shall be included in an operations and maintenance manual developed as part of the performance-based design.

5.1.7 Special Definitions. See Section 3.3.

5.2 Performance Criteria.

5.2.1 General. To achieve the goals and objectives of Section 4.1, a building design shall meet the performance criteria in Section 5.2.

5.2.2* Safety from Fire.

5.2.2.1 Equipment and fixtures in a building shall be designed and installed to reasonably prevent the ignition of construction materials and building contents.

5.2.2.2* Buildings shall be designed and constructed to reasonably prevent the spread of fire beyond the compartment of fire origin.

5.2.2.3 Buildings shall be designed and constructed to reasonably prevent structural failure under fire conditions for a time sufficient to protect the occupants.

5.2.2.4 Means shall be provided to evacuate, relocate, or defend in place occupants of buildings for a time sufficient to prevent them from exposure to instantaneous or cumulative untenable conditions from smoke, heat, or flames.

5.2.2.5* Buildings shall be designed and constructed to reasonably prevent structural failure under fire conditions for a time sufficient to enable fire fighters and emergency responders to conduct search and rescue operations.

5.2.2.6* Buildings shall be designed and constructed to reasonably prevent fire spread to adjacent buildings and structures for a time sufficient for emergency responders to arrive on-site and establish fire suppression operations.

5.2.2.7 Access shall be provided to enable fire apparatus to reach the principal building entrance for fire department use and to reach the fire emergency equipment provided for the building.

5.2.3 Safety from Structural Failure.

5.2.3.1* General. Buildings shall be designed and constructed to withstand combinations of dead, live, impact, soil and hydrostatic pressure, rain, flood, wind, ice, snow, and earthquake loads at the serviceability performance level and immediate occupancy performance level without collapse as specified in 5.5.3 for the structural design scenarios.

5.2.3.2* Serviceability Performance. The serviceability level of performance shall be a state in which structural elements and nonstructural components shall not sustain detrimental cracking or yielding, or degradation in strength, stiffness, or fire resistance requiring repair. Structures shall not experience permanent deformation or deflection or deformation or deflection that is disruptive of building function. Nonstructural components and permanent fixtures and features shall not become displaced or dislodged.

5.2.3.3* Immediate Occupancy Performance. The immediate occupancy level of performance shall be a state in which minor, repairable cracking, yielding, and permanent deformation of the structure and nonstructural elements shall be permitted to occur. However, the structure shall not sustain such degradation in configuration, stiffness, strength, or fire resistance that it is unsafe for continued occupancy.

5.2.3.4* Collapse Prevention Performance. Buildings shall be designed and constructed to reasonably prevent structural failure under extreme loads to enable emergency responders to effect occupant rescue and evacuate the building.

Copyright National Fire Protection Association
Provided by IHS under license with NFPA
No reproduction or networking permitted without license from IHS
Not for Resale

5.2.4 Safety During Building Use.

5.2.4.1 In assembly occupancy buildings with occupant loads greater than 1000, measures shall be provided to reasonably prevent injury or death during the movement of crowds in emergency and nonemergency conditions.

5.2.4.2 During construction and demolition, measures shall be taken to ensure the safety of occupants and workers from fire and other hazards in the building undergoing construction or demolition and in adjacent buildings that could be impacted by a hazard in the building undergoing construction or demolition.

5.2.4.3* Measures shall be provided to alert occupants to the presence of a fire or other emergency condition to provide sufficient time for occupants to evacuate, relocate, or defend in place.

5.2.4.4 Signs shall be provided to identify means of egress, exits, emergency safety features, potential hazards, and features intended for the safety and for the amenity of occupants with physical or sensory limitations.

5.2.4.5 Glass or other similar frangible construction material shall be installed in such a manner that, if occupants come into contact with such material, one of the following occurs:

(1) The material resists impact without breaking.
(2) The material breaks in such a manner that it does not cause injury.
(3) The material is protected from occupant impact.

5.2.5 Surface Water Entry. Buildings shall be designed and constructed to ensure that surface water will not enter or accumulate during the design flood, unless the building is designed to accommodate such surface water entry.

5.2.6 Control of Contaminants.

5.2.6.1* Buildings shall limit, or shall be provided with systems to reduce, concentrations in the building of contaminants, unwanted odors, and excess moisture, to quantities that do not unreasonably affect the health and safety of the occupants during normal use of the building.

5.2.6.2* Strong concentrations of pollutants, odors, and moisture shall be eliminated or collected at their point of origin and exhausted from the building; mild concentrations shall be diluted with outdoor air by natural or mechanical means.

5.2.7 Function. Buildings, construction, facilities and equipment required by this *Code* shall be designed, constructed, and installed in a manner that minimizes the risk of failure, when required, during the occupancy of the building.

5.2.8 Cultural Heritage.

5.2.8.1 Additions, alterations, and renovations in culturally significant buildings and structures shall be undertaken so as to preserve their original quality or character and so that, if the additions, alterations, or renovations were removed in the future, the essential form and integrity of the original building or structure would be essentially unchanged.

5.2.8.2* For historic buildings or structures located in whole or in part in flood hazard areas established by 39.4.2, work on the building or structure shall be permitted, provided that the following provisions are met:

(1) The proposed work does not preclude the continued designation as a historic building or structure.
(2) A variance to the flood provisions of this *Code* is granted by the board of appeals.

5.2.9 Mission Continuity. Buildings that perform a community public welfare role shall incorporate means appropriate to their function and importance to ensure their continued operation following a fire or other natural or man-made disaster.

5.2.10 Environment. Buildings shall be designed and constructed so that, during their construction and operation, damage to the environment from waste gases, solids, or liquids from the building is reduced to the greatest extent possible.

5.2.11 Uncontrolled Moisture.

5.2.11.1 The exterior envelope of the building shall be designed to control the entry of precipitation into the building.

5.2.11.2 The exterior walls, attics, crawl spaces, and other concealed or enclosed building elements that comprise the building envelope shall be designed to control the accumulation of water vapor or its condensation in such quantities and physical state that contact of water vapor or its condensation with the building insulation or building materials will not result in conditions that adversely affect the health of the building occupants.

5.2.11.3 Building materials located in areas within the building that are subject to exposure from water discharges or leaks in quantities and durations that cause exterior moisture to accumulate for extended periods of time, thus resulting in conditions that adversely affect the health of the building occupants, shall be designed to control penetration of, or direct contact with, water or shall be protected from such exposure.

5.3 Retained Prescriptive Requirements. The design shall comply with the requirements of Section 5.3 in addition to the performance criteria of Section 5.2 and the methods of Sections 5.4 through 5.8.

5.3.1 Systems and Features. All fire protection systems and features of the building shall comply with applicable NFPA standards for those systems and features.

5.3.2 Means of Egress. Means of egress shall comply with the following:

(1) Changes in level in means of egress — 11.1.7
(2) Guards — 11.1.8
(3) Doors — 11.2.1
(4) Stairs — 11.2.2, other than the provisions of 11.2.2.5.1, 11.2.2.5.2, 11.2.2.7.2, 11.2.2.7.3, and 11.2.2.7.4
(5) Ramps — 11.2.5, other than the provisions of 11.2.5.4.1, 11.2.5.6, and 11.2.5.7.1
(6) Fire escape ladders — 11.2.9
(7) Alternating tread devices — 11.2.11
(8) Capacity of means of egress — Section 11.3, other than the provisions of 11.3.3 and 11.3.4
(9) Impediments to egress — 11.5.2
(10) Illumination of means of egress — Section 11.8
(11) Emergency lighting — Section 11.9
(12) Marking of means of egress — Section 11.10

5.3.3 Equivalency. Equivalent designs for the features covered in the retained prescriptive requirements mandated by Section 5.3 shall be addressed in accordance with the equivalency provisions of Section 1.5.

5.3.4 Accessibility. Accessibility shall comply with Chapter 12.

Copyright National Fire Protection Association
Provided by IHS under license with NFPA
No reproduction or networking permitted without license from IHS
Not for Resale

5.3.5 Building Environment.

5.3.5.1 Interior Environment. The interior environment shall comply with Section 49.2.

5.3.5.2 Lighting. Lighting shall comply with Section 49.3.

5.3.5.3 Sound Transmission. Sound transmission shall comply with Section 49.4.

5.3.5.4 Indoor Space Dimensions. Indoor space dimensions shall comply with Section 49.5.

5.3.5.5 Access to Attics. Access to attics shall be in accordance with Section 49.6.

5.3.5.6 Heating and Cooling Design Conditions. Heating and cooling design conditions shall comply with Section 49.7.

5.3.5.7 Special Interior Requirements. Interior environments shall comply with Section 49.8.

5.3.6 Energy Efficiency. Energy efficiency shall comply with Chapter 51.

5.3.7 Quality Assurance During Construction. Quality assurance during construction shall comply with Chapter 40.

5.3.8 Plumbing Systems. Plumbing systems shall comply with Chapter 53.

5.3.9 Electrical Systems. Electrical systems shall comply with Chapter 52.

5.3.10 Flood-Resistant Construction. Construction shall be in accordance with Chapter 39.

5.4* Performance-Based Design Characteristics and Assumptions.

5.4.1 General.

5.4.1.1 Design characteristics and assumptions used in the performance-based design shall be clearly stated and shown to be realistic and sustainable.

5.4.1.2 Each design characteristic and assumption used in the design shall be accurately translated into input data specifications, as appropriate for the calculation method or model to be used.

5.4.1.3 Design characteristics and assumptions that the design analyses do not explicitly address or incorporate and that are, therefore, omitted from input data specifications shall be identified, and a sensitivity analysis of the consequences of that omission shall be performed.

5.4.1.4 Design characteristics and assumptions modified in input data specifications, due to limitations in test methods or other data-generation procedures, shall be identified, and a sensitivity analysis of the consequences of the modification shall be performed.

5.4.1.5* The design shall not include mutually inconsistent characteristics, assumptions, or statements of conditions.

5.4.2 Building Characteristics and Assumptions.

5.4.2.1* Characteristics of the building or its contents, equipment, layout, or operations that are not inherent in the design specifications, but that affect occupant or building behavior or the rate of hazard development, shall be explicitly identified.

5.4.2.2* The performance of building systems and features shall reflect the documented performance and reliability of the components of those systems or features, unless design specifications are incorporated to modify the expected performance.

5.4.3 Occupant Characteristics and Assumptions.

5.4.3.1* General. The selection of occupant characteristics to be used in the design calculations shall be approved by the authority having jurisdiction and shall provide an accurate reflection of the expected population of building users.

5.4.3.2 Occupant Profile. Occupant characteristics shall represent the normal occupant profile, unless design specifications are used to modify the expected occupant features.

5.4.3.3* Response Characteristics. The basic response characteristics of sensibility, reactivity, mobility, and susceptibility shall be considered. Such consideration shall include the expected distribution of characteristics of a population appropriate to the use of the building. The source of data for these characteristics shall be documented.

5.4.3.4 Location. It shall be assumed that, in every normally occupied room or area, at least one person shall be located at the most remote point from the exits.

5.4.3.5* Number of Occupants. The design shall be based on the maximum number of people that every occupied room or area is expected to contain. Where success or failure of the design is contingent on the number of occupants not exceeding a certain number, operational controls shall be used to ensure that a greater number of occupants could not be expected to be present.

5.4.3.6* Staff Assistance. In those occupancies where staff assistance is required to ensure the safety of other occupants, such trained assistance shall be provided. The ability of trained employees to be included as part of the building safety system shall be identified and documented.

5.4.4 Emergency Response Personnel Characteristics and Assumptions.

5.4.4.1 Nongovernmental emergency response personnel shall not be relied upon in the performance design, unless they are under the continuous and direct control of the building owner or occupant. Emergency response personnel of the governmental agency legally responsible for providing emergency responders to the local jurisdiction shall be permitted to be relied upon in the performance design when approved by the governmental agency.

5.4.4.2 Design characteristics and assumptions related to the availability, speed of response, effectiveness, roles, and other characteristics of emergency response personnel shall be specified, estimated, or characterized sufficiently for evaluation of the design.

5.4.5 Other Characteristics and Assumptions.

5.4.5.1* Post-Construction Conditions. Design characteristics or assumptions related to activities during the life of the building that affect the ability of the building to meet the stated goals, objectives, and performance criteria of this *Code* shall be specified, estimated, or characterized sufficiently to evaluate the design.

5.4.5.2 Off-Site Conditions. Design characteristics or assumptions related to resources or conditions outside the property being designed that affect the ability of the building to meet the stated goals, objectives, and performance criteria of this

Copyright National Fire Protection Association
Provided by IHS under license with NFPA
No reproduction or networking permitted without license from IHS
Not for Resale

Code shall be specified, estimated, or characterized sufficiently for evaluation of the design.

5.4.5.3* Special Provisions. Additional provisions not covered by the design characteristics and assumptions provided in Section 5.4, but that are required for the design to comply with the goals, objectives, or performance criteria of this *Code*, shall be documented.

5.4.5.4 Single Fire Source. It is assumed that a single fire source shall be utilized to evaluate the protection measures provided in this *Code*.

5.5* Design Scenarios.

5.5.1 General.

5.5.1.1 The proposed design shall be considered to meet the goals and objectives if it achieves the performance criteria for each required design scenario. The authority having jurisdiction shall approve the parameters involved with design scenarios.

5.5.1.2* Design scenarios shall be evaluated for each required scenario using a method acceptable to the authority having jurisdiction and appropriate for the conditions. Each scenario shall be as challenging and realistic as any that could realistically occur in the building.

5.5.1.3* Scenarios selected as design scenarios shall include, but shall not be limited to, those specified in 5.5.2 through 5.5.4. Design fire scenarios demonstrated by the design team to the satisfaction of the authority having jurisdiction as inappropriate for the building use and conditions shall not be required to be evaluated fully. Design Fire Scenario 8 shall not be required to be applied to fire protection systems for which both the level of reliability and the design performance in the absence of the system are acceptable to the authority having jurisdiction.

5.5.1.4 Each design scenario used in the performance-based design proposal shall be translated into input data specifications, as appropriate for the calculation method or model.

5.5.1.5 Any design scenario specifications that the design analyses do not explicitly address or incorporate, and that are, therefore, omitted from input data specifications, shall be identified, and a sensitivity analysis of the consequences of that omission shall be performed.

5.5.1.6 Any design scenario specifications modified in input data specifications, due to limitations in test methods or other data-generation procedures, shall be identified, and a sensitivity analysis of the consequences of the modification shall be performed.

5.5.2 Required Design Scenarios — Fire.

5.5.2.1* Design Fire Scenario 1. Design Fire Scenario 1, which is an occupancy-specific design scenario representative of a typical fire for the occupancy, shall explicitly specify the following:

(1) Occupant activities
(2) Number and location of occupants
(3) Room size
(4) Furnishings and contents
(5) Fuel properties and ignition sources
(6) Ventilation conditions
(7) First item ignited and its location

5.5.2.2* Design Fire Scenario 2. Design Fire Scenario 2, which is an ultrafast-developing fire in the primary means of egress, with interior doors open at the start of the fire, shall address the concern regarding a reduction in the number of available means of egress.

5.5.2.3* Design Fire Scenario 3. Design Fire Scenario 3, which is a fire that starts in a normally unoccupied room that can potentially endanger a large number of occupants in a large room or other area, shall address the concern regarding a fire starting in a normally unoccupied room and migrating into the space that can, potentially, hold the greatest number of occupants in the building.

5.5.2.4* Design Fire Scenario 4. Design Fire Scenario 4, which is a fire that originates in a concealed wall space or ceiling space adjacent to a large, occupied room, shall address the concern regarding a fire originating in a concealed space that does not have either a detection system or suppression system and then spreading into the room within the building that can, potentially, hold the greatest number of occupants.

5.5.2.5* Design Fire Scenario 5. Design Fire Scenario 5, which is a slow-developing fire, shielded from fire protection systems, in close proximity to a high occupancy area, shall address the concern regarding a relatively small ignition source causing a significant fire.

5.5.2.6* Design Fire Scenario 6. Design Fire Scenario 6, which is the most severe fire resulting from the largest possible fuel load characteristic of the normal operation of the building, shall address the concern regarding a rapid-developing fire with occupants present.

5.5.2.7* Design Fire Scenario 7. Design Fire Scenario 7, which is an outside exposure fire, shall address the concern regarding a fire starting at a location remote from the area of concern and either spreading into the area, blocking escape from the area, or developing untenable conditions within the area.

5.5.2.8* Design Fire Scenario 8. Design Fire Scenario 8, which is a fire originating in ordinary combustibles in a room or area with each passive or active fire protection system or fire protection feature independently rendered ineffective, shall address the concern regarding each fire protection system or fire protection feature, considered individually, being unreliable or becoming unavailable. This scenario shall not be required to be applied to fire protection systems or fire protection features for which both the level of reliability and the design performance in the absence of the system or feature are acceptable to the authority having jurisdiction.

5.5.3 Required Design Scenarios — Structural.

5.5.3.1 Serviceability Scenario. Buildings shall be designed and constructed to provide serviceability performance, as presented in 5.2.3.2, under dead load and in combination with live, impact, soil and hydrostatic pressure, rain, flood, wind, ice, snow, and earthquake loads having the mean recurrence intervals indicated in Table 5.5.3.1. The following combinations of load shall be considered, or, alternatively, the loads and load combinations specified in ASCE 7, *Minimum Design Loads for Buildings and Other Structures,* shall be permitted to be used:

(1) Dead
(2) Dead and floor live and impact
(3) Dead and floor live and roof live or snow or rain
(4) Dead and floor live and wind or earthquake

Copyright National Fire Protection Association
Provided by IHS under license with NFPA
No reproduction or networking permitted without license from IHS
Not for Resale

(5) Dead and wind or earthquake
(6) In hurricane-prone regions, dead and wind and flood
(7) In other areas, dead and flood

Table 5.5.3.1 Serviceability Level Mean Recurrence Intervals for Transient Loads (yr)

	Occupancy Category†			
Load Type*	I	II	III	IV
Live	50	50	50	50
Snow	50	50	100	100
Wind	NA	10	20	20
Earthquake	NA	25	50	100
Flood	100	100	100	100

NA: Not applicable.
* Loading includes deflection and vibration.
† Occupancy categories are as defined in ASCE 7.

5.5.3.1.1 The effects of soil and hydrostatic pressure shall be considered concurrently with dead loads in the load combinations specified in 5.5.3.1(1) through (7).

5.5.3.1.2 Seventy-five percent of the effects of floor live and wind loads, or floor live and earthquake loads, shall be permitted to be used when considered in combination.

5.5.3.2 Immediate Occupancy Scenario. Buildings and their nonstructural components shall be designed and constructed to provide the immediate occupancy performance level, as presented in 5.2.3.3, under dead load in combination with live loads having the mean recurrence intervals indicated in Table 5.5.3.1 and earthquake loads having the mean recurrence intervals indicated in Table 5.5.3.2. Building cladding systems shall be designed to provide immediate occupancy performance under dead load in combination with the wind loads indicated in Table 5.5.3.2. The following load combinations shall be used:

(1) Dead and floor live and earthquake
(2) Dead and wind or earthquake

Table 5.5.3.2 Immediate Occupancy Level Mean Recurrence Intervals for Transient Loads (yr)

	Occupancy Category[b]			
Load Type[a]	I	II	III	IV
Wind[c]	25	50	100	100
Earthquake	NA	50	100	200
Flood[d]	NA	100	100	100

NA: Not applicable.
[a] Loading includes deflection and vibration.
[b] Occupancy categories are as defined in ASCE 7.
[c] In hurricane-prone areas, wind speed is based on both hurricane simulation techniques and 500-year wind speed records.
[d] In hurricane-prone areas, flood height is determined in conjunction with the hurricane wind surge.

5.5.3.2.1 The effects of soil and hydrostatic pressure shall be considered concurrently with dead loads in the load combinations specified in 5.5.3.2(1) and (2).

5.5.3.2.2 Seventy-five percent of the effects of floor live and wind loads, or floor live and earthquake loads, shall be permitted to be used when considered in combination.

5.5.3.3 Collapse Prevention Scenario. Buildings shall be designed and constructed to resist collapse, and their components shall be designed to resist failure, as presented in 5.2.3.4, under dead load in combination with live loading having the mean recurrence intervals indicated in Table 5.5.3.1, in combination with ground motion intensities having the fraction of maximum considered earthquake (MCE) intensity indicated in Table 5.5.3.3. The following combinations of load shall be considered:

(1) Dead and floor live and earthquake
(2) Dead and earthquake

Table 5.5.3.3 Collapse Prevention Level Minimum Intensities for Earthquake Shaking (multiple of MCE acceleration)

	Occupancy Category*			
Component	I	II	III	IV
Structure and structural components	0.67	1.0	1.25	1.5
Nonstructural components	0.67	0.67	0.83	1.0

Note: Maximum considered earthquake (MCE) shaking is as defined in ASCE 7.
*Occupancy categories are as defined in ASCE 7.

5.5.3.3.1 The effects of soil and hydrostatic pressure shall be considered concurrently with dead loads in the load combinations specified in 5.5.3.3(1) and (2).

5.5.3.3.2 Seventy-five percent of the effects of floor live and earthquake loads shall be permitted to be used when considered in combination.

5.5.4 Required Design Scenarios — Safety During Building Use.

5.5.4.1* Building Use Design Scenario 1. Building use design scenario 1, which is an event in which the maximum occupant load is in the assembly occupancy building and an emergency event occurs blocking the principal exit/entrance to the building, shall address the concern of occupants having to take alternative exit routes under crowded conditions.

5.5.4.2 Building Use Design Scenario 2. Building use design scenario 2, which is a fire in an area of a building undergoing construction or demolition while the remainder of the building is occupied and in which the normal fire suppression system in the area has been taken out of service, shall address the concern regarding the inoperability of certain building fire safety features during construction and demolition in a partially occupied building.

Copyright National Fire Protection Association
Provided by IHS under license with NFPA
No reproduction or networking permitted without license from IHS
Not for Resale

5.6 Evaluation of Proposed Designs.

5.6.1 General. A proposed design's performance shall be assessed relative to each performance objective in Section 4.1 and each applicable scenario in Section 5.5, with the assessment conducted through the use of appropriate calculation methods. The authority having jurisdiction shall approve the choice of assessment methods.

5.6.2 Use. The design professional shall use the assessment methods to demonstrate that the proposed design will achieve the goals and objectives for each scenario, as measured by the performance criteria in light of the safety margins and uncertainty analysis, given the assumptions.

5.6.3 Input Data.

5.6.3.1 Data. Input data for computer fire models shall be obtained in accordance with ASTM E 1591, *Standard Guide for Obtaining Data for Deterministic Fire Models*. Data for use in analytical models that are not computer-based fire models shall be obtained using appropriate measurement, recording, and storage techniques to ensure the applicability of the data to the analytical method being used.

5.6.3.2 Data Requirements. A complete listing of input data requirements for all models, engineering methods, and other calculation or verification methods required or proposed as part of the performance-based design shall be provided.

5.6.3.3 Uncertainty and Conservatism of Data. Uncertainty in input data shall be analyzed and, as determined appropriate by the authority having jurisdiction, addressed through the use of conservative values.

5.6.4 Output Data. The assessment methods used shall accurately and appropriately produce the required output data from input data based on the design specifications, assumptions, and scenarios.

5.6.5 Validity. Evidence shall be provided confirming that the assessment methods are valid and appropriate for the proposed building, use, and conditions.

5.7* Safety Factors. Approved safety factors shall be included in the design methods and calculations to reflect uncertainty in the assumptions, data, and other factors associated with the performance-based design.

5.8 Documentation Requirements.

5.8.1* General. All aspects of the design, including those described in 5.8.2 through 5.8.14, shall be documented. The format and content of the documentation shall be acceptable to the authority having jurisdiction.

5.8.2* Technical References and Resources. The authority having jurisdiction shall be provided with sufficient documentation to support the validity, accuracy, relevance, and precision of the proposed methods. The engineering standards, calculation methods, and other forms of scientific information provided shall be appropriate for the particular application and methodologies used.

5.8.3 Building Design Specifications. All details of the proposed building design that affect the ability of the building to meet the stated goals and objectives shall be documented.

5.8.4 Performance Criteria. Performance criteria, with sources, shall be documented.

5.8.5 Occupant Characteristics. Assumptions about occupant characteristics shall be documented.

5.8.6 Design Scenarios. Descriptions of design hazards scenarios shall be documented.

5.8.7 Input Data. Input data to models and assessment methods, including sensitivity analysis, shall be documented.

5.8.8 Output Data. Output data from models and assessment methods, including sensitivity analysis, shall be documented.

5.8.9 Safety Factors. The safety factors utilized shall be documented.

5.8.10 Prescriptive Requirements. Retained prescriptive requirements shall be documented.

5.8.11* Modeling Features.

5.8.11.1 Assumptions made by the model user and the description of the models and methods used, including known limitations, shall be documented.

5.8.11.2 Documentation shall be provided verifying that the assessment methods have been used validly and appropriately to address the design specifications, assumptions, and scenarios.

5.8.12 Evidence of Modeler Capability. The design team's relevant experience with the models, test methods, databases, and other assessment methods used in the performance-based design proposal shall be documented.

5.8.13 Performance Evaluation. The performance evaluation summary shall be documented.

5.8.14 Use of Performance-Based Design Option. Design proposals shall include documentation that provides anyone involved in ownership or management of the building with notification of the following:

(1) The building was approved as a performance-based design with certain specified design criteria and assumptions.
(2) Any remodeling, modification, renovation, change in use, or change in the established assumptions is to be re-evaluated and reapproved.

Chapter 6 Classification of Occupancy, Classification of Hazard of Contents, and Special Operations

6.1 Classification of Occupancy.

6.1.1 General.

6.1.1.1 Occupancy Classification.

6.1.1.1.1 The occupancy of a building or structure, or portion of a building or structure, shall be classified in accordance with 6.1.2 through 6.1.13.

6.1.1.1.2 Occupancy classification shall be subject to the ruling of the authority having jurisdiction where there is a question of proper classification in any individual case.

6.1.1.2 Special Structures. Occupancies in special structures shall conform to the requirements of the specific occupancy chapter, Chapters 16 through 30, except as modified by Chapter 31.

6.1.1.3 Structures in Flood Hazard Areas. For buildings and structures located wholly or partly within the flood hazard

Copyright National Fire Protection Association
Provided by IHS under license with NFPA
No reproduction or networking permitted without license from IHS
Not for Resale

area established in 39.4.2, the additional requirements of 39.11.1.2 shall be met.

6.1.2 Assembly. For requirements, see Chapter 16.

6.1.2.1* Definition — Assembly Occupancy. An occupancy (1) used for a gathering of 50 or more persons for deliberation, worship, entertainment, eating, drinking, amusement, awaiting transportation, or similar uses; or (2) used as a special amusement building, regardless of occupant load.

6.1.2.2 Other. (Reserved)

6.1.3 Educational. For requirements, see Chapter 17.

6.1.3.1* Definition — Educational Occupancy. An occupancy used for educational purposes through the twelfth grade by six or more persons for 4 or more hours per day or more than 12 hours per week.

6.1.3.2 Other Occupancies. Other occupancies associated with educational institutions shall be in accordance with the appropriate parts of this *Code*.

6.1.3.3 Incidental Instruction. In cases where instruction is incidental to some other occupancy, the section of this *Code* governing such other occupancy shall apply.

6.1.4 Day Care. For requirements, see Chapter 18.

6.1.4.1* Definition — Day-Care Occupancy. An occupancy in which four or more clients receive care, maintenance, and supervision, by other than their relatives or legal guardians, for less than 24 hours per day.

6.1.4.2 Other. (Reserved)

6.1.5 Health Care. For requirements, see Chapter 19.

6.1.5.1* Definition — Health Care Occupancy. An occupancy used for purposes of medical or other treatment or care of four or more persons where such occupants are mostly incapable of self-preservation due to age, physical or mental disability, or because of security measures not under the occupants' control.

6.1.5.2 Other. (Reserved)

6.1.6 Ambulatory Health Care. For requirements, see Chapter 20.

6.1.6.1 Definition — Ambulatory Health Care Occupancy. A building or portion thereof used to provide services or treatment simultaneously to four or more patients that provides, on an outpatient bases, one or more of the following: (1) treatment for patients that renders the patients incapable of taking action for self-preservation under emergency conditions without the assistance of others; or (2) anesthesia that renders the patients incapable of taking action for self-preservation under emergency conditions without the assistance of others; (3) emergency or urgent care for patients who, due to the nature of their injury or illness, are incapable of taking action for self-preservation under emergency conditions without the assistance of others.

6.1.6.2 Other. (Reserved)

6.1.7 Detention and Correctional. For requirements, see Chapter 21.

6.1.7.1* Definition — Detention and Correctional Occupancy. An occupancy used to house one or more persons under varied degrees of restraint or security where such occupants are mostly incapable of self-preservation because of security measures not under the occupants' control.

6.1.7.2* Nonresidential Uses. Within detention and correctional facilities, uses other than residential housing shall be in accordance with the appropriate chapter of the *Code*.

6.1.8 Residential.

6.1.8.1* Definition — Residential Occupancy. An occupancy that provides sleeping accommodations for purposes other than health care or detention and correctional.

6.1.8.1.1* Definition — One- and Two-Family Dwelling. A building that contains not more than two dwelling units with independent cooking and bathroom facilities. *(For requirements, see Chapter 22.)*

6.1.8.1.2 Definition — Lodging or Rooming House. A building or portion thereof that does not qualify as a one- or two-family dwelling, that provides sleeping accommodations for a total of 16 or fewer people on a transient or permanent basis, without personal care services, with or without meals, but without separate cooking facilities for individual occupants. *(For requirements, see Chapter 23.)*

6.1.8.1.3* Definition — Hotel. A building or groups of buildings under the same management in which there are sleeping accommodations for more than 16 persons and primarily used by transients for lodging with or without meals. *(For requirements, see Chapter 24.)*

6.1.8.1.4* Definition — Dormitory. A building or a space in a building in which group sleeping accommodations are provided for more than 16 persons who are not members of the same family in one room, or a series of closely associated rooms, under joint occupancy and single management, with or without meals, but without individual cooking facilities. *(For requirements, see Chapter 24.)*

6.1.8.1.5 Definition — Apartment Building. A building or portion thereof containing three or more dwelling units with independent cooking and bathroom facilities. *(For requirements, see Chapter 25.)*

6.1.8.2 Other. (Reserved)

6.1.9 Residential Board and Care. For requirements, see Chapter 26.

6.1.9.1* Definition — Residential Board and Care Occupancy. A building or portion thereof that is used for lodging and boarding of four or more residents, not related by blood or marriage to the owners or operators, for the purpose of providing personal care services.

6.1.9.2 Other. (Reserved)

6.1.10 Mercantile. For requirements, see Chapter 27.

6.1.10.1* Definition — Mercantile Occupancy. An occupancy used for the display and sale of merchandise.

6.1.10.2 Other. (Reserved)

6.1.11 Business. For requirements, see Chapter 28.

6.1.11.1* Definition — Business Occupancy. An occupancy used for the transaction of business other than mercantile.

6.1.11.2 Other. (Reserved)

6.1.12 Industrial. For requirements, see Chapter 29.

Copyright National Fire Protection Association
Provided by IHS under license with NFPA
No reproduction or networking permitted without license from IHS
Not for Resale

6.1.12.1* Definition — Industrial Occupancy. An occupancy in which products are manufactured or in which processing, assembling, mixing, packaging, finishing, decorating, or repair operations are conducted.

6.1.12.2 Other. (Reserved)

6.1.13 Storage. For requirements, see Chapter 30.

6.1.13.1* Definition — Storage Occupancy. An occupancy used primarily for the storage or sheltering of goods, merchandise, products, vehicles, or animals.

6.1.13.2 Other. (Reserved)

6.2 Multiple Occupancies.

6.2.1 General.

6.2.1.1 Multiple occupancies, as defined in 6.2.2.1, shall comply with the requirements of the following:

(1) Subsection 6.2.1
(2) Subsection 6.2.3, mixed occupancy requirements, or 6.2.4, separated occupancy requirements

6.2.1.2 Where exit access from an occupancy traverses another occupancy, the multiple occupancy shall be treated as a mixed occupancy.

6.2.1.3* Where incidental to another occupancy, areas used as follows shall be permitted to be considered part of the predominant occupancy and shall be subject to the provisions of the *Code* that apply to the predominant occupancy:

(1) Mercantile, business, industrial, or storage use
(2)*Nonresidential use with an occupant load fewer than that established by Section 6.1 for the occupancy threshold

6.2.1.4 Each occupancy shall not exceed the area limitations or be located at a height greater than that permitted for such occupancy and the type of construction being used.

6.2.1.5 Where minor accessory uses do not occupy more than 25 percent of the area of any floor of a building, nor more than the basic area permitted for the occupancy by 7.4.2 for such minor use, for the purpose of determining permitted area, the principal use of the building shall determine the occupancy classification.

6.2.2 Definitions.

6.2.2.1 Multiple Occupancy. A building or structure in which two or more classes of occupancy exist.

6.2.2.2 Mixed Occupancy. A multiple occupancy where the occupancies are intermingled.

6.2.2.3 Separated Occupancy. A multiple occupancy where the occupancies are separated by fire resistance–rated assemblies.

6.2.3 Mixed Occupancies.

6.2.3.1 Each portion of the building shall be classified as to its use in accordance with Section 6.1.

6.2.3.2 The means of egress facilities, type of construction, protection, and other safeguards in the building shall comply with the most restrictive fire and life safety requirements of the occupancies involved.

6.2.3.3 The type of construction required for the building shall be determined in accordance with Section 7.4.

6.2.3.4 The most restrictive, applicable, high-rise building provisions and fire protection system requirements shall apply to all portions of the building.

6.2.4 Separated Occupancies.

6.2.4.1 Where separated occupancies are provided, each part of the building comprising a distinct occupancy, as described in this chapter, shall be completely separated from other occupancies by fire-resistive assemblies, as specified in 6.2.4.2 through 6.2.4.5 and Table 6.2.4.1(a) and Table 6.2.4.1(b). Separation of occupancies having high hazard contents shall also be in accordance with 34.3.2.3 and 34.2.4.2.

6.2.4.2 Occupancy separations shall meet the requirements of Chapter 8.

6.2.4.3 Occupancy separations shall be vertical, horizontal, or both or, when necessary, of such other form as required to provide complete separation between occupancy divisions in the building.

6.2.4.4 Where the occupancy separation is horizontal, structural members supporting the separation shall be protected by an equivalent fire-resistive construction.

6.2.4.5 The type of construction required for the building shall be determined in accordance with Section 7.4.

6.3 Hazard of Contents.

6.3.1 General.

6.3.1.1 For the purpose of this *Code*, the hazard of contents shall be the relative danger of the start and spread of fire, the danger of smoke or gases generated, and the potential of an explosion or other occurrence to endanger the lives and safety of the occupants of the building or structure or to cause damage to the building or its contents.

6.3.1.2 Hazard of contents shall be classified by the registered design professional (RDP) or owner and submitted to the authority having jurisdiction for review and approval on the basis of the character of the contents and the processes or operations conducted in the building or structure.

6.3.1.3 For the purpose of this *Code*, where different degrees of hazard of contents exist in different parts of a building or structure, the most hazardous shall govern the classification, unless hazardous areas are separated or protected as specified in the applicable sections of Chapters 16 through 31.

6.3.2* Classification of Hazard of Contents.

6.3.2.1* General. The hazard of contents of any building or structure shall be classified as low, ordinary, or high in accordance with 6.3.2.2 through 6.3.2.4.

6.3.2.2* Low Hazard. Low hazard contents shall be classified as those of such low combustibility that no self-propagating fire therein can occur.

6.3.2.3* Ordinary Hazard. Ordinary hazard contents shall be classified as those that are likely to burn with moderate rapidity or to give off a considerable volume of smoke.

6.3.2.4 High Hazard.

6.3.2.4.1 General.

6.3.2.4.1.1 High hazard contents shall include materials defined as "hazardous material" in Chapter 3, whether stored, used, or handled.

Copyright National Fire Protection Association
Provided by IHS under license with NFPA
No reproduction or networking permitted without license from IHS
Not for Resale

Table 6.2.4.1(a) Required Fire Resistance–Rated Separations for Separated Occupancies (hr)[*], Part 1

Occupancy	Assembly ≤300	Assembly >300 to ≤ 1000	Assembly >1000	Educational	Day Care > 12 Clients	Day-Care Homes	Health Care	Ambulatory Health Care	Detention and Correctional	One- and Two-Family Dwellings	Lodging or Rooming Houses
Assembly ≤300		0	0	2	2	2	2[†]	2	2[†]	2	2
Assembly >300 to ≤1000			0	2	2	2	2[†]	2	2[†]	2	2
Assembly >1000				2	2	2	2[†]	2	2[†]	2	2
Educational					2	2	2[†]	2	2[†]	2	2
Day Care >12 Clients						1	2[†]	2	2[†]	2	2
Day-Care Homes							2[†]	2	2[†]	2	2
Health Care								2[†]	2[†]	2[†]	2[†]
Ambulatory Health Care									2[†]	2	2
Detention and Correctional										2[†]	2[†]
One- and Two-Family Dwellings											1
Lodging or Rooming Houses											

[*] The fire resistance rating is permitted to be reduced by 1 hour, but in no case to less than 1 hour, where the building is protected throughout by an approved, electrically supervised automatic sprinkler system in accordance with NFPA 13, *Standard for the Installation of Sprinkler Systems*.
[†] The 1-hour reduction due to the presence of sprinklers in accordance with the asterisk footnote is not permitted.

6.3.2.4.1.2 High hazard contents shall be classified in accordance with 6.3.2.4.2 through 6.3.2.4.6, whether stored, used, or handled.

6.3.2.4.1.3* Occupancies in which high hazard contents are stored, used, or handled shall also comply with Chapter 34.

6.3.2.4.2 High Hazard Level 1 Contents. High hazard Level 1 contents shall include materials that present a detonation hazard including, but not limited to, the following:

(1) Explosives
(2) Unclassified detonable organic peroxides
(3) Class 4 oxidizers
(4) Detonable pyrophoric materials
(5) Class 3 detonable and Class 4 unstable (reactive) materials

6.3.2.4.3 High Hazard Level 2 Contents. High hazard Level 2 contents shall include materials that present a deflagration hazard or a hazard from accelerated burning including, but not limited to, the following:

(1) Class I, Class II, or Class III-A flammable or combustible liquids that are used or stored in normally open containers or systems, or in closed containers or systems at gauge pressures of more than 15 psi (103 kPa)
(2) Combustible dusts stored, used, or generated in a manner creating a severe fire or explosion hazard
(3) Flammable gases and flammable cryogenic liquids
(4) Class I organic peroxides
(5) Class 3 solid or liquid oxidizers that are used or stored in normally open containers or systems, or in closed containers or systems at gauge pressures of more than 15 psi (103 kPa)
(6) Nondetonable pyrophoric materials
(7) Class 3 nondetonable unstable (reactive) materials
(8) Class 3 water-reactive materials

6.3.2.4.4 High Hazard Level 3 Contents. High hazard Level 3 contents shall include materials that readily support combustion or present a physical hazard including, but not limited to, the following:

(1) Level 2 and Level 3 aerosols
(2) Class I, Class II, or Class III-A flammable or combustible liquids that are used or stored in normally closed containers or systems at gauge pressures of less than 15 psi (103 kPa)
(3) Consumer fireworks, 1.4 G
(4) Flammable solids, other than dusts classified as high hazard Level 2, stored, used, or generated in a manner creating a high fire hazard
(5) Class II and Class III organic peroxides
(6) Class 2 solid or liquid oxidizers
(7) Class 3 solid or liquid oxidizers that are used or stored in normally closed containers or systems at gauge pressures of less than 15 psi (103 kPa)
(8) Oxidizing gases and oxidizing cryogenic liquids
(9) Class 2 unstable (reactive) materials
(10) Class 2 water-reactive materials

--`,,```,,,,````-`-`,,`,,`,`,,`---
Copyright National Fire Protection Association
Provided by IHS under license with NFPA
No reproduction or networking permitted without license from IHS
Not for Resale

Table 6.2.4.1(b) Required Fire Resistance–Rated Separations for Separated Occupancies (hr)[*], Part 2

	Hotels and Dormitories	Apartment Buildings	Board and Care, Small	Board and Care, Large	Mercantile	Mercantile, Covered Mall	Mercantile, Bulk Retail	Business	Industrial, Low Hazard	Industrial	Storage, Low Hazard	Storage
Assembly ≤300	2	2	2	2	2	2	3	1	2	3	2	3
Assembly >300 to ≤1000	2	2	2	2	2	2	3	2	2	3	2	3
Assembly >1000	2	2	2	2	2	2	3	2	2	3	2	3
Educational	2	2	2	2	2	2	3	2	3	3	2	3
Day Care >12 Clients	2	2	2	2	2	2	3	2	3	3	2	3
Day-Care Homes	2	2	2	2	2	2	3	2	3	3	2	3
Health Care	2[†]	2[†]	2[†]	2[†]	2[†]	2[†]	3	2[†]	2[†]	3	2[†]	3
Ambulatory Health Care	2	2	2	2	2	2	3	1	2	3	2	3
Detention and Correctional	2[†]	2[†]	2[†]	2[†]	2[†]	2[†]	3	3	2[†]	3	2[†]	3
One- and Two-Family Dwellings	2	2	1	2	2	2	3	2	2	3	2	3
Lodging or Rooming Houses	2	2	2	2	2	2	3	2	2	3	2	3
Hotels and Dormitories		2	2	2	2	2	3	2	2	3	2	3
Apartment Buildings			2	2	2	2	3	2	2	3	2	3
Board and Care, Small				1	2	2	3	2	3	3	2	3
Board and Care, Large					2	2	3	2	3	3	2	3
Mercantile						0	3	2	2	2	2	2
Mercantile, Covered Mall							3	2	3	3	2	3
Mercantile, Bulk Retail								2	3	3	2	2
Business									2	2	2	2
Industrial, Low Hazard										0	1	2
Industrial											1	2
Storage, Low Hazard												1
Storage												

[*] The fire resistance rating is permitted to be reduced by 1 hour, but in no case to less than 1 hour, where the building is protected throughout by an approved, electrically supervised automatic sprinkler system in accordance with NFPA 13, *Standard for the Installation of Sprinkler Systems.*

[†] The 1-hour reduction due to the presence of sprinklers in accordance with the asterisk footnote is not permitted.

--`,,```,,,,````-`-`,,`,,`,`,,`---

Copyright National Fire Protection Association
Provided by IHS under license with NFPA
No reproduction or networking permitted without license from IHS
Not for Resale

6.3.2.4.5 High Hazard Level 4 Contents. High hazard Level 4 contents shall include materials that are acute health hazards including, but not limited to, the following:

(1) Corrosives
(2) Highly toxic materials
(3) Toxic materials

6.3.2.4.6 High Hazard Level 5 Contents. High hazard Level 5 contents shall include hazardous production materials (HPM) used in the fabrication of semiconductors or semiconductor research and development.

6.4 Special Operations.

6.4.1 General.

6.4.1.1 In addition to the requirements in this *Code*, buildings or structures in which the operations specified in 6.4.2 are conducted, or in which materials are manufactured, stored, sold, or handled, shall also comply with applicable construction requirements in the standards and codes in 6.4.2.

6.4.1.2 When conflicts exist between this *Code* and the referenced documents, the provisions of 1.3.2 shall apply.

6.4.2 Specific Operations.

6.4.2.1 Acetylene Cylinder Charging Plants. Buildings and structures in plants that are engaged in the generation and compression of acetylene and in the charging of acetylene cylinders, either as their sole operation or in conjunction with facilities for charging other compressed gas cylinders, shall be constructed in accordance with NFPA 51A, *Standard for Acetylene Cylinder Charging Plants*.

6.4.2.2 Agricultural and Food Products Facilities. Buildings and structures associated with the production, storage, and handling of agricultural and food products that are subject to the accumulation of agricultural dust shall be constructed in accordance with NFPA 61, *Standard for the Prevention of Fires and Dust Explosions in Agricultural and Food Processing Facilities*, and include the following:

(1) All facilities that receive, handle, process, dry, blend, use, mill, package, store, or ship dry agricultural bulk materials, their by-products, or dusts that include grains, oilseeds, agricultural seeds, legumes, sugar, flour, spices, feeds, and other related materials
(2) All facilities designed for manufacturing and handling starch, including drying, grinding, conveying, processing, packaging, and storing dry or modified starch, and dry products and dusts generated from these processes
(3) Those seed preparation and meal-handling systems of oilseed processing plants not covered by NFPA 36, *Standard for Solvent Extraction Plants* [**61:**1.1.1]

6.4.2.3 Aerosol Manufacture and Storage. Building and structures in which aerosol products are manufactured, stored, and displayed shall be constructed in accordance with NFPA 30B, *Code for the Manufacture and Storage of Aerosol Products*.

6.4.2.4 Aircraft Engine Test Facilities. Buildings and structures in which aircraft engines are tested within a test cell or on a test stand shall be constructed in accordance with NFPA 423, *Standard for Construction and Protection of Aircraft Engine Test Facilities*.

6.4.2.5 Aircraft Hangars. Aircraft hangars and mezzanines, tool rooms, and other enclosures within aircraft storage and servicing areas shall be constructed in accordance with NFPA 409, *Standard on Aircraft Hangars*.

6.4.2.6 Airport Terminal Buildings. Airport terminal buildings and aircraft loading walkways between the terminal building and aircraft shall be constructed in accordance with NFPA 415, *Standard on Airport Terminal Buildings, Fueling Ramp Drainage, and Loading Walkways*.

6.4.2.7 Aluminum Powder Facilities. Buildings used for the manufacture, packing, or loading for shipment of aluminum powders shall be constructed in accordance with NFPA 484, *Standard for Combustible Metals, Metal Powders, and Metal Dusts*.

6.4.2.8 Ammonium Nitrate Storage. Buildings in which ammonium nitrate is stored shall be constructed in accordance with NFPA 490, *Code for the Storage of Ammonium Nitrate*.

6.4.2.9 Cellulose Nitrate Motion Picture Film Storage. Buildings in which cellulose nitrate motion picture film is stored shall be constructed in accordance with NFPA 40, *Standard for the Storage and Handling of Cellulose Nitrate Film*.

6.4.2.10 Buildings Housing Compressed Natural Gas (CNG) Vehicular Fuel Systems. Buildings and structures used for compressing, storing, and dispensing of CNG as an engine fuel in fleet- and public-dispensing operations shall be constructed in accordance with NFPA 52, *Compressed Natural Gas (CNG) Vehicular Fuel Systems Code*.

6.4.2.11 Buildings with Cleanrooms. Buildings in semiconductor fabrication facilities that contain cleanrooms shall be constructed in accordance with NFPA 318, *Standard for the Protection of Semiconductor Fabrication Facilities*.

6.4.2.12 Coal Preparation Plants. Surface buildings, structures, and housing provided as part of a plant designed to prepare coal for shipment, including the separation, crushing, screening, washing, drying, storage, and loadout of coal to make ready for market, shall be constructed in accordance with NFPA 120, *Standard for Fire Prevention and Control in Coal Mines*.

6.4.2.13 Combustible Particulate Solids Facilities. Buildings and structures in all phases of the manufacture, processing, blending, repackaging, and handling of combustible particulate solids, where the materials present a fire or explosion hazard, shall be constructed in accordance with NFPA 654, *Standard for the Prevention of Fire and Dust Explosions from the Manufacturing, Processing, and Handling of Combustible Particulate Solids*.

6.4.2.14 Buildings Housing Combustion Engines and Gas Turbines. Buildings and rooms in which stationary combustion engines and gas turbines are installed shall be constructed in accordance with NFPA 37, *Standard for the Installation and Use of Stationary Combustion Engines and Gas Turbines*.

6.4.2.15 Commercial Cooking Operations. Buildings in which public and private cooking operations are performed, except for single-family residential occupancies, shall be constructed in accordance with NFPA 96, *Standard for Ventilation Control and Fire Protection of Commercial Cooking Operations*.

6.4.2.16 Compressed and Liquefied Gas Facilities. Buildings in which compressed and liquefied gases are stored, used, or handled shall be constructed in accordance with NFPA 55, *Standard for the Storage, Use, and Handling of Compressed Gases and Cryogenic Fluids in Portable and Stationary Containers, Cylinders, and Tanks*.

Copyright National Fire Protection Association
Provided by IHS under license with NFPA
No reproduction or networking permitted without license from IHS
Not for Resale

6.4.2.17 Cultural Resource Properties. Buildings and structures comprising or containing cultural resource properties shall be constructed in accordance with NFPA 909, *Code for the Protection of Cultural Resource Properties — Museums, Libraries, and Places of Worship.*

6.4.2.18 Data Processing Facilities. Buildings in which electronic computer/data processing equipment and computer areas are located shall be constructed in accordance with NFPA 75, *Standard for the Protection of Information Technology Equipment.*

6.4.2.19 Dipping and Coating Process Facilities Using Flammable or Combustible Liquids. Buildings in which articles or materials are passed through tanks, vats, containers, or process equipment that contains flammable or combustible liquids including, but not limited to, dipping, roll coating, flow coating, curtain coating, and cleaning shall be constructed in accordance with NFPA 34, *Standard for Dipping and Coating Processes Using Flammable or Combustible Liquids.*

6.4.2.20 Drycleaning Plants. Drycleaning plants shall be constructed in accordance with NFPA 32, *Standard for Drycleaning Plants.*

6.4.2.21 Emergency Communications Centers. Buildings used as public emergency communications centers and emergency response facilities shall be constructed in accordance with NFPA 1221, *Standard for the Installation, Maintenance, and Use of Emergency Services Communications Systems.*

6.4.2.22 Ethylene Oxide Facilities. Buildings and structures that house ethylene oxide storage, dispensing, and use shall be constructed in accordance with NFPA 560, *Standard for the Storage, Handling, and Use of Ethylene Oxide for Sterilization and Fumigation.*

6.4.2.23 Particulate Exhaust Systems Facilities. Buildings and structures containing exhaust systems for air conveying of vapors, gases, mists, and noncombustible particulate solids shall be constructed in accordance with NFPA 91, *Standard for Exhaust Systems for Air Conveying of Vapors, Gases, Mists, and Noncombustible Particulate Solids.*

6.4.2.24 Facilities for Explosives Manufacturing, Storage, and Sale. Buildings in which explosives are manufactured, stored, or sold shall be constructed in accordance with NFPA 495, *Explosive Materials Code.*

6.4.2.25 Fireworks and Pyrotechnic Articles Facilities. Buildings in which fireworks and pyrotechnic articles are manufactured, stored, or sold at retail, and magazines in which fireworks, 1.1 and fireworks, 1.3 are stored, shall be constructed in accordance with NFPA 1124, *Code for the Manufacture, Transportation, Storage, and Retail Sales of Fireworks and Pyrotechnic Articles.*

6.4.2.26 Flammable and Combustible Liquids Facilities. Buildings or structures in which flammable and combustible liquids, including waste liquids, are stored, handled, or used shall be constructed in accordance with NFPA 30, *Flammable and Combustible Liquids Code.*

6.4.2.27 Health Care Facilities. Buildings in which medical, dental, psychiatric, nursing, obstetrical, or surgical care are provided including, but not limited to, hospitals, nursing homes, limited care facilities, clinics, medical and dental offices, and ambulatory care centers shall be constructed in accordance with NFPA 99, *Standard for Health Care Facilities.*

6.4.2.28 Heliports. When permitted by the authority having jurisdiction, rooftop heliports and rooftop landing pads shall be constructed in accordance with NFPA 418, *Standard for Heliports.* Fueling systems associated with rooftop heliports shall be constructed in accordance with NFPA 407, *Standard for Aircraft Fuel Servicing.*

6.4.2.29 Facilities Housing Gaseous Hydrogen Systems. Buildings and structures in consumer premises with a gaseous hydrogen system with a storage capacity of more than 400 scf (11 m^3) shall be constructed in accordance with NFPA 55, *Standard for the Storage, Use, and Handling of Compressed Gases and Cryogenic Fluids in Portable and Stationary Containers, Cylinders, and Tanks.*

6.4.2.30 Facilities Housing Liquefied Hydrogen Systems. Buildings and structures in consumer premises with a liquefied hydrogen system with a storage capacity of more than 39.6 gal (150 L) shall be constructed in accordance with NFPA 55, *Standard for the Storage, Use, and Handling of Compressed Gases and Cryogenic Fluids in Portable and Stationary Containers, Cylinders, and Tanks.*

6.4.2.31 Hypobaric Facilities. Buildings in which hypobaric facilities and chambers are located shall be constructed in accordance with NFPA 99B, *Standard for Hypobaric Facilities.*

6.4.2.32 Facilities Housing Incinerators and Waste Handling Systems. Buildings containing incinerators, waste handling chutes, conveying systems, storage rooms, or compactors shall be constructed in accordance with NFPA 82, *Standard on Incinerators and Waste and Linen Handling Systems and Equipment.*

6.4.2.33 Laboratories Using Chemicals. Buildings in which chemicals are handled or stored, and in which laboratory-scale operations are conducted, shall be constructed in accordance with NFPA 45, *Standard on Fire Protection for Laboratories Using Chemicals.*

6.4.2.34 Facilities Housing Linen Handling Systems. Buildings containing linen and laundry chutes and conveying systems shall be constructed in accordance with NFPA 82.

6.4.2.35 Lithium Storage, Processing, and Handling Facilities. Buildings intended for the storage, handling, processing, or use of lithium shall be constructed in accordance with NFPA 484.

6.4.2.36 Liquefied Natural Gas (LNG) Fueling Facilities. Buildings associated with LNG fueling operations shall be constructed in accordance with NFPA 52, *Vehicular Fuel Systems Code.*

6.4.2.37 Liquefied Natural Gas (LNG) Production Facilities. Buildings and structures associated with the production and related storage and handling of LNG shall be constructed in accordance with NFPA 59A, *Standard for the Production, Storage, and Handling of Liquefied Natural Gas (LNG).*

6.4.2.38 Liquefied Petroleum Gas Distribution Facilities. Buildings or structures housing liquefied petroleum gas distribution facilities shall be constructed in accordance with NFPA 58, *Liquefied Petroleum Gas Code.*

6.4.2.39 Magnesium Storage, Handling, and Processing Facilities. Buildings in which magnesium solids and powders are stored, handled, or processed, including mills, foundries, production plants, and storage facilities, shall be constructed in accordance with NFPA 484.

Copyright National Fire Protection Association
Provided by IHS under license with NFPA
No reproduction or networking permitted without license from IHS
Not for Resale

6.4.2.40 Marinas and Boatyards. Buildings and structures used for the construction, repair, storage, hauling, launching, or fueling of vessels shall be constructed in accordance with NFPA 303, *Fire Protection Standard for Marinas and Boatyards*, if fire on a dock would pose an immediate threat to such facilities, or if a fire at such a facility would pose an immediate threat to a dock area.

6.4.2.41 Marine Terminals, Piers, and Wharves. Buildings and structures provided as part of a marine terminal shall be constructed in accordance with NFPA 307, *Standard for the Construction and Fire Protection of Marine Terminals, Piers, and Wharves.*

6.4.2.42 Model Rocket Motor Manufacturing Facilities. Buildings in which model rocket motors are manufactured, and associated storage buildings and magazines, shall be constructed in accordance with NFPA 1125, *Code for the Manufacture of Model Rocket and High Power Rocket Motors.*

6.4.2.43 Motion Picture and Television Production Facilities. Buildings and structures used as soundstages and production studios in the motion picture and television industry shall be constructed in accordance with NFPA 140, *Standard on Motion Picture and Television Production Studio Soundstages and Approved Production Facilities.*

6.4.2.44 Reserved.

6.4.2.45 Motor Fuel Dispensing Facilities and Repair Garages. Motor fuel dispensing facilities, marine/motor fuel dispensing facilities, motor fuel dispensing facilities located inside buildings, fleet vehicle motor fuel dispensing facilities, and repair garages shall be constructed in accordance with NFPA 30A, *Code for Motor Fuel Dispensing Facilities and Repair Garages.*

6.4.2.46 Nuclear Power Plants. Nuclear power plant buildings and structures shall be constructed in accordance with NFPA 804, *Standard for Fire Protection for Advanced Light Water Reactor Electric Generating Plants*, or NFPA 805, *Performance-Based Standard for Fire Protection for Light Water Reactor Electric Generating Plants*, as applicable.

6.4.2.47 Facilities Housing Oil-Burning Equipment. Rooms in buildings containing an oil-fuel storage tank shall be constructed in accordance with NFPA 31, *Standard for the Installation of Oil-Burning Equipment.*

6.4.2.48 Organic Coating Manufacturing Facilities. Buildings and structures in which flammable and combustible liquids are used to manufacture organic coatings for automotive, industrial, institutional, household, marine, printing, transportation, and other applications shall be constructed in accordance with NFPA 35, *Standard for the Manufacture of Organic Coatings.*

6.4.2.49 Organic Peroxide Storage. Buildings and structures in which organic peroxide formulations are stored shall be constructed in accordance with NFPA 432, *Code for the Storage of Organic Peroxide Formulations.*

6.4.2.50 Facilities for Mercantile Sales of Oxidizers. Buildings and structures in which liquid and solid oxidizers are sold shall be constructed in accordance with NFPA 430, *Code for the Storage of Liquid and Solid Oxidizers.*

6.4.2.51 Facilities for Storage of Oxidizers. Buildings and structures in which liquid and solid oxidizers are stored shall be constructed in accordance with NFPA 430.

6.4.2.52 Oxygen–Fuel Gas Systems Facilities. Buildings and structures in which oxygen–fuel gas welding and cutting systems are used for welding or cutting, gaseous fuels are generated from flammable liquids, or calcium carbide is stored shall be constructed in accordance with NFPA 51, *Standard for the Design and Installation of Oxygen–Fuel Gas Systems for Welding, Cutting, and Allied Processes.*

6.4.2.53 Bulk Oxygen Systems Facilities. Buildings and structures in consumer premises with a bulk oxygen system with a storage capacity of more than 20,000 ft^3 (566 m^3) of oxygen at normal temperature and pressure (NTP) shall be constructed in accordance with NFPA 55, *Standard for the Storage, Use, and Handling of Compressed Gases and Cryogenic Fluids in Portable and Stationary Containers, Cylinders, and Tanks.*

6.4.2.54 Parking Structures. Open, enclosed, basement, and underground parking structures, other than those provided with one- and two-family dwellings, shall be constructed in accordance with NFPA 88A, *Standard for Parking Structures.*

6.4.2.55 Pesticide Storage. Buildings in which pesticides are stored shall be constructed in accordance with NFPA 434, *Code for the Storage of Pesticides.*

6.4.2.56 Pyroxylin Plastic Storage. Buildings in which pyroxylin plastics are stored in the form of raw material, unfinished and finished products, or scrap shall be constructed in accordance with NFPA 42, *Code for the Storage of Pyroxylin Plastic.*

6.4.2.57 Racetrack Facilities. Buildings and structures provided at racetracks, including those containing stalls for housing horses, human sleeping quarters, feed rooms, tack rooms, equipment storage rooms, blacksmith shops, kitchens, mechanical equipment rooms, and toilet facilities shall be constructed in accordance with NFPA 150, *Standard on Fire Safety in Racetrack Stables.*

6.4.2.58 Radioactive Materials Facilities. Buildings in which radioactive materials are stored, handled, or used in quantities and conditions requiring government oversight (for example, the U.S. Nuclear Regulatory Commission or U.S. Department of Energy), or requiring a license to possess or use these materials, and all other locations in which such quantities or conditions exist shall be constructed in accordance with NFPA 801, *Standard for Fire Protection for Facilities Handling Radioactive Materials.*

6.4.2.59 Solvent Extraction Plants. Buildings and structures in which commercial-scale extraction processing of animal and vegetable oils and fats by the use of Class I flammable hydrocarbon liquids is conducted, and all buildings and structures within 100 ft (30 m) of such an extraction process, shall be constructed in accordance with NFPA 36.

6.4.2.60 Spray Application Facilities Using Flammable or Combustible Materials. Buildings in which flammable or combustible materials are sprayed or applied by fluidized bed application methods, either continuously or intermittently, shall be constructed in accordance with NFPA 33, *Standard for Spray Application Using Flammable or Combustible Materials.*

6.4.2.61 Fuel Cell Power Plants. Buildings and structures in which stationary fuel cell power plants are installed shall be constructed in accordance with NFPA 853, *Standard for the Installation of Stationary Fuel Cell Power Systems.*

6.4.2.62 Sulfur Processing Facilities. Buildings and structures in which sulfur grinding or pulverizing machinery is located

Copyright National Fire Protection Association
Provided by IHS under license with NFPA
No reproduction or networking permitted without license from IHS
Not for Resale

shall be constructed in accordance with NFPA 655, *Standard for Prevention of Sulfur Fires and Explosions*.

6.4.2.63 Titanium Production and Processing Facilities. Buildings housing titanium-reduction furnaces, boring and crushing facilities, refining operations, and titanium powder–drying operations shall be constructed in accordance with NFPA 484.

6.4.2.64 Wastewater Treatment Plants. Buildings and structures in wastewater treatment plants shall be constructed in accordance with NFPA 820, *Standard for Fire Protection in Wastewater Treatment and Collection Facilities*.

6.4.2.65 Wood Processing and Woodworking Facilities. Buildings and structures in facilities that handle, store, or process wood or wood products that produce or utilize finely divided wood particles or wood fibers shall be constructed in accordance with NFPA 664, *Standard for the Prevention of Fires and Explosions in Wood Processing and Woodworking Facilities*. Such facilities shall include, but are not limited to, wood flour plants, woodworking plants, lumber mills, and composite board plants.

6.4.2.66 Zirconium Production and Processing Facilities. Buildings housing zirconium-reduction furnaces, boring and crushing facilities, refining operations, and zirconium powder–drying operations shall be constructed in accordance with NFPA 484.

Chapter 7 Construction Types and Height and Area Requirements

7.1 General.

7.1.1 Buildings.

7.1.1.1 Buildings or parts of buildings classified in a specified occupancy group because of their use shall be limited to the types of construction specified in Section 7.2 and shall comply with the height and area requirements specified in Sections 7.4 through 7.6.

7.1.1.2 Annex D shall be considered an alternate method for determining allowable types of construction.

7.1.2 Mechanical, Plumbing, and Electrical Components. Combustible mechanical, plumbing, and electrical components installed in accordance with the applicable code shall be permitted in all types of construction.

7.1.3 Location and Property. Buildings or parts of buildings shall be subject to the requirements of Section 7.3 for protection of exterior walls and for openings in exterior walls as determined by location on property.

7.1.4 Terminology. Where the term *limited-combustible* is used in this *Code*, it shall also include *noncombustible*.

7.1.5 Fire Department Access. [**1:**18.2]

7.1.5.1 Fire department access and fire department access roads shall be provided and maintained in accordance with 7.1.5. [**1:**18.2.1]

7.1.5.2 Fire Department Access Roads. [**1:**18.2.3]

7.1.5.2.1 Required Access.

7.1.5.2.1.1 Approved fire department access roads shall be provided in accordance with 7.1.5 for every facility, building, or portion of a building hereafter constructed or relocated. [**1:**18.2.3.1.1]

7.1.5.2.1.2 When not more than two one- and two-family dwellings or private garages, carports, sheds, and agricultural buildings, and detached buildings or structures 400 ft^2 (37 m^2) or less are present, the requirements of 7.1.5.2.1 and 7.1.5.2.5 shall be permitted to be modified by the authority having jurisdiction. [**1:**18.2.3.1.3]

7.1.5.2.1.3 When fire department access roads cannot be installed due to location on property, topography, waterways, nonnegotiable grades, or other similar conditions, the authority having jurisdiction shall be authorized to require additional fire protection features. [**1:**18.2.3.1.4]

7.1.5.2.2 Access to Building.

7.1.5.2.2.1 A fire department access road shall extend to within 50 ft (15 m) of at least one exterior door that can be opened from the outside and that provides access to the interior of the building. [**1:**18.3.2.1]

7.1.5.2.3 Additional Requirements.

7.1.5.2.3.1 Fire department access roads shall be provided such that any portion of the facility or any portion of an exterior wall of the first story of the building is located not more than 150 ft (46 m) from fire department access roads as measured by an approved route around the exterior of the building or facility. [**1:**18.2.3.2.2]

7.1.5.2.3.2 When buildings are protected throughout with an approved automatic fire sprinkler system that is installed in accordance with NFPA 13, *Standard for the Installation of Sprinkler Systems*; NFPA 13D, *Standard for the Installation of Sprinkler Systems in One- and Two-Family Dwellings and Manufactured Homes*; or NFPA 13R, *Standard for the Installation of Sprinkler Systems in Residential Occupancies up to and Including Four Stories in Height*, the distance shall be permitted to be increased to 450 ft (137 m). [**1:**18.2.3.2.2.1]

7.1.5.2.4 Multiple Access Roads. More than one fire department access road shall be provided when it is determined by the authority having jurisdiction that access by a single road could be impaired by vehicle congestion, condition of terrain, climatic conditions, or other factors that could limit access. [**1:**18.2.3.3]

7.1.5.2.5 Specifications. [**1:**18.2.3.4]

7.1.5.2.5.1 Dimensions. [**1:**18.2.3.4.1]

(A) Fire department access roads shall have an unobstructed width of not less than 20 ft (6100 mm). [**1:**18.2.3.4.1.1]

(B) Fire department access roads shall have an unobstructed vertical clearance of not less than 13 ft 6 in. (4.1 m). [**1:**18.2.3.4.1.2]

(C) Vertical clearance shall be permitted to be reduced, provided such reduction does not impair access by fire apparatus, and approved signs are installed and maintained indicating the established vertical clearance when approved. [**1:**18.2.3.4.1.2.1]

(D) Vertical clearances or widths shall be increased when vertical clearances or widths are not adequate to accommodate fire apparatus. [**1:**18.2.3.4.1.2.2]

7.1.5.2.5.2 Surface. Fire department access roads shall be designed and maintained to support the imposed loads of fire

Copyright National Fire Protection Association
Provided by IHS under license with NFPA
No reproduction or networking permitted without license from IHS
Not for Resale

apparatus and shall be provided with an all-weather driving surface. [**1:**18.2.3.4.2]

7.1.5.2.5.3 Turning Radius.

(A) The turning radius of a fire department access road shall be as approved by the authority having jurisdiction. [**1:**18.2.3.4.3.1]

(B) Turns in fire department access roads shall maintain the minimum road width.

7.1.5.2.5.4 Dead Ends. Dead-end fire department access roads in excess of 150 ft (46 m) in length shall be provided with approved provisions for the fire apparatus to turn around. [**1:**18.2.3.4.4]

7.1.5.2.5.5 Bridges. [**1:**18.2.3.4.5]

(A) When a bridge is required to be used as part of a fire department access road, it shall be constructed and maintained in accordance with nationally recognized standards. [**1:**18.2.3.4.5.1]

(B) The bridge shall be designed for a live load sufficient to carry the imposed loads of fire apparatus. [**1:**18.2.3.4.5.2]

(C) Vehicle load limits shall be posted at both entrances to bridges where required by the authority having jurisdiction. [**1:**18.2.3.4.5.3]

7.1.5.2.5.6 Grade. [**1:**18.2.3.4.6]

(A) The gradient for a fire department access road shall not exceed the maximum approved. [**1:**18.2.3.4.6.1]

(B)* The angle of approach and departure for any means of fire department access shall not exceed 1 ft drop in 20 ft (305 mm drop in 6100 mm) or the design limitations of the fire apparatus of the fire department, and shall be subject to approval by the authority having jurisdiction. [**1:**18.2.3.4.6.2]

7.1.5.2.5.7 Marking of Fire Department Access Road. Where required by the authority having jurisdiction, approved signs or other approved notices shall be provided and maintained to identify fire department access roads or to prohibit the obstruction thereof or both. [**1:**18.2.3.5.1]

7.2 Construction Types.

7.2.1 General.

7.2.1.1* Buildings and structures shall be classified according to their type of construction, which shall be based upon one of five basic types of construction designated as Type I, Type II, Type III, Type IV, and Type V, with fire resistance ratings not less than those specified in Table 7.2.1.1 and 7.2.3 through 7.2.6 and with fire resistance ratings meeting the requirements of 7.2.7.

7.2.1.2 Where two or more types of construction are used in the same building, the entire building shall be classified as the least type of construction in the building and shall be subject to the requirements for that type, except as permitted by other provisions of this *Code*.

7.2.1.3 Requirements for specific materials, types of construction, and fire protection shall be minimum requirements, and any material, type of construction, or fire protection affording safety or a fire resistance rating equal to or greater than that provided in this *Code* shall be permitted.

7.2.1.4 Materials shall be in accordance with all of the following, except as modified by any special requirements in 7.2.3:

(1) Chapter 41, Concrete
(2) Chapter 42, Aluminum
(3) Chapter 43, Masonry
(4) Chapter 44, Steel
(5) Chapter 45, Wood
(6) Chapter 46, Glass and Glazing
(7) Chapter 47, Gypsum Board, Lath, and Plaster
(8) Chapter 48, Plastics

7.2.2 Reserved.

7.2.3 Type I (442 or 332) and Type II (222, 111, or 000) Construction.

7.2.3.1 Type I and Type II Construction. Type I (442 or 332) and Type II (222, 111, or 000) construction shall be those types in which the fire walls, structural elements, walls, arches, floors, and roofs are of approved noncombustible or limited-combustible materials.

7.2.3.2 Special Requirements — Type I and Type II Construction. The special requirements in 7.2.3.2.1 through 7.2.3.2.20 shall apply to Type I and Type II construction.

7.2.3.2.1 Wood Sleepers. Where wood sleepers are used for installing wood flooring on noncombustible floors, the furring space shall be filled with noncombustible or limited-combustible material or shall be fireblocked so that there will be no open space exceeding 100 ft^2 (9 m^2) in area under the flooring.

7.2.3.2.2 Sleeper Space. The furring spaces created by sleepers in 7.2.3.2.1 shall be filled solidly under all permanent partitions to prevent spread of fire under the flooring.

7.2.3.2.3 Mezzanine Floors in Type I and Type II (222 or 111) Construction. Mezzanine floors in Type I and Type II (222 or 111) construction shall have a fire resistance rating of not less than 1 hour.

7.2.3.2.4 Mezzanine Floors in Type II (000) Construction. Mezzanine floors in Type II(000) construction shall not be required to have a fire resistance rating.

7.2.3.2.5 Platforms. Permanent platforms shall be constructed of noncombustible or limited-combustible materials.

7.2.3.2.6 Space Beneath Platforms. When the space beneath any permanent platform is used for storage or any purpose other than equipment, wiring, or plumbing, the floor construction shall have a fire resistance rating of not less than 1 hour.

7.2.3.2.7 Fire-Retardant-Treated Wood Platforms. Fire-retardant-treated wood shall be permitted for permanent platforms that do not exceed 3000 ft^2 (278 m^2), that are not more than 30 in. (760 mm) above the floor, and that do not occupy more than 50 percent of the floor area of the room or space in which they are located.

7.2.3.2.8 Roofs 20 ft (6100 mm) or More Above Any Floor. In occupancies other than mercantile, industrial, or storage occupancies with ordinary or high hazard contents, or other occupancies with high hazard contents exceeding the maximum allowable quantities per control area as set forth in 34.1.3, the fire-resistive protection of the roof-ceiling assembly required by Table 7.2.1.1 shall not be required where every part of the roof-ceiling assembly is 20 ft (6100 mm) or more above any floor immediately below.

Copyright National Fire Protection Association
Provided by IHS under license with NFPA
No reproduction or networking permitted without license from IHS
Not for Resale

Table 7.2.1.1 Fire Resistance Ratings for Type I Through Type V Construction (hr)

	Type I		Type II			Type III		Type IV	Type V	
	442	**332**	**222**	**111**	**000**	**211**	**200**	**2HH**	**111**	**000**
Exterior Bearing Walls[a]										
Supporting more than one floor, columns, or other bearing walls	4	3	2	1	0[b]	2	2	2	1	0[b]
Supporting one floor only	4	3	2	1	0[b]	2	2	2	1	0[b]
Supporting a roof only	4	3	1	1	0[b]	2	2	2	1	0[b]
Interior Bearing Walls										
Supporting more than one floor, columns, or other bearing walls	4	3	2	1	0	1	0	2	1	0
Supporting one floor only	3	2	2	1	0	1	0	1	1	0
Supporting roofs only	3	2	1	1	0	1	0	1	1	0
Columns										
Supporting more than one floor, columns, or other bearing walls	4	3	2	1	0	1	0	H	1	0
Supporting one floor only	3	2	2	1	0	1	0	H	1	0
Supporting roofs only	3	2	1	1	0	1	0	H	1	0
Beams, Girders, Trusses, and Arches										
Supporting more than one floor, columns, or other bearing walls	4	3	2	1	0	1	0	H	1	0
Supporting one floor only	2	2	2	1	0	1	0	H	1	0
Supporting roofs only	2	2	1	1	0	1	0	H	1	0
Floor-Ceiling Assemblies	2	2	2	1	0	1	0	H	1	0
Roof-Ceiling Assemblies	2	1½	1	1	0	1	0	H	1	0
Interior Nonbearing Walls	0	0	0	0	0	0	0	0	0	0
Exterior Nonbearing Walls[c]	0[b]	0[b]	0[b]	0[b]	0[b]	0[b]	0[b]	0[b]	0[b]	0[b]

H: Heavy timber members *(see text for requirements).*
[a]See 7.3.2.1.
[b]See Section 7.3.
[c]See 7.2.3.2.12, 7.2.4.2.3, and 7.2.5.6.8.

7.2.3.2.9 Fire-Retardant-Treated Wood Roof.

7.2.3.2.9.1 Fire-retardant-treated wood members shall be permitted to be used for unprotected members specified in 7.2.3.2.8.

7.2.3.2.9.2 Fire-retardant-treated wood shall be permitted for roof construction, including girders and trusses, under the following conditions:

(1) In Type II buildings
(2) In Type I buildings of two stories or less
(3) In Type I buildings over two stories when the vertical distance from the floor to the roof is 20 ft (6100 mm) or more

7.2.3.2.10 Heavy Timber Structural Elements. In all occupancies, heavy timber structural elements shall be permitted to be used for the roof construction where a 1-hour fire resistance rating or less is required.

7.2.3.2.11 Interior Nonbearing Walls.

7.2.3.2.11.1 Interior nonbearing walls shall be constructed of noncombustible or limited-combustible materials.

7.2.3.2.11.2 Interior nonbearing walls required to have a fire resistance rating of 2 hours or less shall be permitted to be fire-retardant-treated wood enclosed within noncombustible or limited-combustible materials, provided that such walls are not used as shaft enclosures.

7.2.3.2.12 Exterior Nonbearing Walls. Nonbearing exterior walls shall be constructed of noncombustible materials, limited-combustible materials, or materials specified in 7.2.3.2.12.1 or 7.2.3.2.12.2.

--`,,```,,,,````-`-`,,`,,`,`,,`---
Copyright National Fire Protection Association
Provided by IHS under license with NFPA
No reproduction or networking permitted without license from IHS
Not for Resale

7.2.3.2.12.1 Fire-retardant-treated wood shall be permitted in exterior nonbearing walls when such walls are not required to have fire resistance ratings.

7.2.3.2.12.2 Exterior nonbearing walls tested in accordance with and meeting the conditions of acceptance of NFPA 285, *Standard Fire Test Method for Evaluation of Fire Propagation Characteristics of Exterior Non-Load-Bearing Wall Assemblies Containing Combustible Components*, shall be permitted.

7.2.3.2.13 Combustible Materials. Combustible materials shall be permitted in accordance with the following:

(1) Foam plastic insulation complying with Section 48.4
(2) Metal composite material complying with Section 37.4.
(3) Thermal and acoustical insulation, other than foam plastic, complying with Section 8.16
(4) Interior floor finish and interior finish, trim, and millwork, such as doors, door frames, window sashes, and window frames
(5) Light-transmitting plastic complying with Sections 38.11 and 48.7
(6) Class A, Class B, or Class C roof coverings
(7) Blocking

7.2.3.2.14 Ceiling and Raised Floor Plenums. The space between the top of the finished ceiling and the underside of the floor or roof above and the space between the top of the finished floor and the underside of a raised floor shall be permitted to be used to supply air to the occupied area or return and exhaust air from the occupied area, provided that the requirements of 7.2.3.2.15 through 7.2.3.2.20 are met.

7.2.3.2.15 Plenum Materials Combustibility. Materials exposed to the airflow shall be noncombustible or limited combustible and have a maximum smoke developed index of 50 or comply with the following. [**90A:**4.3.10.2.6]

7.2.3.2.15.1 Electrical wires and cables and optical fiber cables shall be listed as noncombustible or limited combustible and have a maximum smoke developed index of 50 or shall be listed as having a maximum peak optical density of 0.5 or less, an average optical density of 0.15 or less, and a maximum flame spread distance of 60 in. (1500 mm) or less when tested in accordance with NFPA 262, *Standard Method of Test for Flame Travel and Smoke of Wires and Cables for Use in Air-Handling Spaces*. [**90A:**4.3.10.2.6.1]

7.2.3.2.15.2 Pneumatic tubing for control systems shall be listed as having a maximum peak optical density of 0.5 or less, an average optical density of 0.15 or less, and a maximum flame spread distance of 60 in. (1500 mm) or less when tested in accordance with UL 1820, *Standard for Fire Test of Pneumatic Tubing for Flame and Smoke Characteristics*. [**90A:**4.3.10.2.6.2]

7.2.3.2.15.3 Nonferrous fire sprinkler piping shall be listed as having a maximum peak optical density of 0.5 or less, an average optical density of 0.15 or less, and a maximum flame spread distance of 60 in. (1500 mm) or less when tested in accordance with UL 1887, *Standard for Fire Test of Plastic Sprinkler Pipe for Visible Flame and Smoke Characteristics*. [**90A:**4.3.10.2.6.3]

7.2.3.2.15.4 Optical-fiber and communication raceways shall be listed as having a maximum peak optical density of 0.5 or less, an average optical density of 0.15 or less, and a maximum flame spread distance of 60 in. (1500 mm) or less when tested in accordance with UL 2024, *Standard for Optical-Fiber Cable Raceway*. [**90A:**4.3.10.2.6.4]

7.2.3.2.15.5 Loudspeakers and recessed lighting fixtures, including their assemblies and accessories, shall be permitted in the ceiling cavity plenum where listed as having a maximum peak optical density of 0.5 or less, an average optical density of 0.15 or less, and a peak heat release rate of 100 kW or less when tested in accordance with UL 2043, *Standard for Fire Test for Heat and Visible Smoke Release for Discrete Products and Their Accessories Installed in Air-Handling Spaces*. [**90A:**4.3.10.2.6.5]

7.2.3.2.15.6 Supplementary materials for air distribution systems shall be permitted when complying with the provisions of 4.3.3 of NFPA 90A, *Standard for the Installation of Air-Conditioning and Ventilating Systems*. [**90A:**4.3.10.2.6.6]

7.2.3.2.15.7 Smoke detectors shall not be required to meet the provisions of 7.2.3.2.15. [**90A:**4.3.10.2.6.7]

7.2.3.2.15.8 Fire-retardant-treated wood complying with Chapter 45 shall be permitted.

7.2.3.2.16 Plenum Fire Stopping. The integrity of the fire stopping for penetrations shall be maintained.

7.2.3.2.17 Plenum Light Diffusers. Light diffusers, other than those made of metal or glass, used in air-handling light fixtures shall be listed and marked as follows:

Fixture Light Diffusers for Air-Handling Fixtures

7.2.3.2.18 Plenum Air Temperature. The temperature of air delivered to plenums shall not exceed 250°F (121°C).

7.2.3.2.19 Plenum Materials Exposure. Materials used in the construction of a plenum shall be suitable for continuous exposure to the temperature and humidity conditions of the environmental air in the plenum.

7.2.3.2.20 Ceiling Plenum Tested Assembly. Where the plenum is a part of a floor-ceiling or roof-ceiling assembly that has been tested or investigated and assigned a fire resistance rating of 1 hour or more, and the assembly contains air ducts and openings for air ducts, all the materials and the construction of the assembly, including the air duct materials and the size and protection of the openings, shall conform with the design of the fire resistance–rated assembly, as tested in accordance with NFPA 251, *Standard Methods of Tests of Fire Resistance of Building Construction and Materials*; ASTM E 119, *Standard Test Methods for Fire Tests of Building Construction and Materials*; or UL 263, *Standard for Fire Tests of Building Construction and Materials*.

7.2.4 Type III (211 or 200) Construction.

7.2.4.1 Type III Construction. Type III (211 or 200) construction shall be that type in which exterior walls and structural elements that are portions of exterior walls are of approved noncombustible or limited-combustible materials, and in which fire walls, interior structural elements, walls, arches, floors, and roofs are entirely or partially of wood of smaller dimensions than required for Type IV construction or are of approved noncombustible, limited-combustible, or other approved combustible materials.

7.2.4.2 Special Requirements — Type III Construction. The special requirements in 7.2.4.2.1 through 7.2.4.2.3 shall apply to Type III construction.

7.2.4.2.1 Fire-Retardant-Treated Wood. Approved fire-retardant-treated wood framing shall be permitted within the assembly of exterior walls having a required fire resistance rating of 2 hours or less and a horizontal separation of not less than 60 in. (1525 mm), provided that the fire resistance rating

Copyright National Fire Protection Association
Provided by IHS under license with NFPA
No reproduction or networking permitted without license from IHS
Not for Resale

is maintained and the exposed outer and inner faces of such walls are constructed of limited-combustible or noncombustible materials.

7.2.4.2.2 Heavy Timber. Wood columns and arches conforming to heavy timber sizes shall be permitted where exterior walls are required to have a 1-hour fire resistance rating or less.

7.2.4.2.3 Exterior Nonbearing Walls. Exterior nonbearing walls tested in accordance with, and meeting the conditions of acceptance of, NFPA 285 shall be permitted.

7.2.5 Type IV (2HH) Construction.

7.2.5.1 Type IV Construction. Type IV (2HH) construction shall be that type in which fire walls, exterior walls, and interior bearing walls and structural elements that are portions of such walls are of approved noncombustible or limited-combustible materials. Other interior structural elements, arches, floors, and roofs shall be of solid or laminated wood without concealed spaces and shall comply with the allowable dimensions of 7.2.5.5.

7.2.5.2 Exterior Wall Separation. Exterior walls greater than 30 ft (9100 mm) from the property line shall be permitted to be of heavy timber construction, provided that the 2-hour rating as required by Table 7.2.1.1 is maintained and such walls contain no combustible concealed spaces.

7.2.5.3 Interior Columns, Arches, Beams, Girders, and Trusses. Interior columns, arches, beams, girders, and trusses of approved materials other than wood shall be permitted, provided that they are protected to provide a fire resistance rating of not less than 1 hour.

7.2.5.4 Concealed Space. Certain concealed spaces shall be permitted in accordance with 7.2.5.5.3.4.

7.2.5.5 Type IV (2HH) Allowable Dimensions. All dimensions in 7.2.5.5 shall be considered nominal.

7.2.5.5.1 Columns.

7.2.5.5.1.1 Wood columns supporting floor loads shall be not less than 8 in. (200 mm) in any dimension.

7.2.5.5.1.2 Wood columns supporting only roof loads shall be not less than 6 in. (150 mm) in width and not less than 8 in. (200 mm) in depth.

7.2.5.5.2 Beams.

7.2.5.5.2.1 Wood beams and girders supporting floor loads shall be not less than 6 in. (150 mm) in width and not less than 10 in. (250 mm) in depth.

7.2.5.5.2.2 Wood beams and girders and other roof framing supporting roof loads only shall be not less than 4 in. (100 mm) in width and not less than 6 in. (150 mm) in depth.

7.2.5.5.3 Arches.

7.2.5.5.3.1 Framed or glued laminated arches that spring from grade or the floor line, and timber trusses that support floor loads, shall be not less than 8 in. (200 mm) in width or depth.

7.2.5.5.3.2 Framed or glued laminated arches for roof construction that spring from grade or the floor line and do not support floor loads shall have members not less than 6 in. (150 mm) in width and not less than 8 in. (200 mm) in depth for the lower half of the member height and not less than 6 in. (150 mm) in depth for the upper half of the member height.

7.2.5.5.3.3 Framed or glued laminated arches for roof construction that spring from the top of walls or wall abutments, and timber trusses that do not support floor loads, shall have members not less than 4 in. (100 mm) in width and not less than 6 in. (150 mm) in depth.

7.2.5.5.3.4 Spaced members shall be permitted to be composed of two or more pieces not less than 3 in. (75 mm) in thickness where blocked solidly throughout their intervening spaces or where such spaces are tightly closed by a continuous wood cover plate not less than 2 in. (50 mm) in thickness that is secured to the underside of the members.

7.2.5.5.4 Splice Plates. Splice plates shall be not less than 3 in. (75 mm) in thickness.

7.2.5.5.5 Floors. Floors shall be constructed of spline or tongue-and-groove plank not less than 3 in. (75 mm) in thickness that is covered with 1 in. (25 mm) tongue-and-groove flooring, laid crosswise or diagonally to the plank, or with ½ in. (13 mm) wood structural panel; or they shall be constructed of laminated planks not less than 4 in. (100 mm) in width, set close together on edge, spiked at intervals of 18 in. (460 mm), and covered with 1 in. (25 mm) tongue-and-groove flooring, laid crosswise or diagonally to the plank, or with ½ in. (13 mm) wood structural panel.

7.2.5.5.6 Roof Decks. Roof decks shall be constructed of spline or tongue-and-groove plank not less than 2 in. (50 mm) in thickness; or of laminated planks not less than 3 in. (75 mm) in width, set close together on edge, and laid as required for floors; or of 1⅛ in. (29 mm) thick interior wood structural panel (exterior glue); or of approved noncombustible or limited-combustible materials of equivalent fire durability.

7.2.5.6 Special Requirements — Type IV Construction. The special requirements in 7.2.5.6.1 through 7.2.5.6.8 shall apply to Type IV construction.

7.2.5.6.1 Structural Elements. Structural elements shall be of heavy timber members (sawn or glued-laminated) or of fire resistance–rated construction as set forth in Table 7.2.1.1 when materials other than heavy timber are used.

7.2.5.6.2 Columns, Arches, Beams, and Roof Decking. Where horizontal separation of 20 ft (6100 mm) or more is provided, wood columns, arches, beams, and roof decking conforming to the requirements for heavy timber in 7.2.5.5 shall be permitted to be used on the exterior of the building.

7.2.5.6.3 Partitions. Permanent partitions shall be permitted to be of solid wood construction formed by not less than two layers of matched boards of 1 in. (25 mm) nominal thickness or of 1-hour fire resistance–rated construction as set forth in Table 7.2.1.1.

7.2.5.6.4 Floors. Floors shall be permitted to be of heavy timber, masonry, concrete, wood, or steel and shall be constructed as required in Chapter 8.

7.2.5.6.5 Roofs. Roofs of 1-hour fire resistance–rated construction shall be permitted.

7.2.5.6.6 Stairways.

7.2.5.6.6.1 Stairways shall be permitted to be constructed with wood treads and risers of not less than 2 in. (50 mm) nominal thickness.

Copyright National Fire Protection Association
Provided by IHS under license with NFPA
No reproduction or networking permitted without license from IHS
Not for Resale

7.2.5.6.6.2 Where built-on, laminated, or plank inclines are required for floors, stairways shall be permitted to be 1 in. (25 mm) nominal thickness or shall be permitted to be constructed as required for buildings of Type I or Type II construction.

7.2.5.6.7 Exterior Walls. Approved fire-retardant-treated wood framing shall be permitted within the assembly of exterior walls having a required fire resistance rating of 2 hours or less and a horizontal separation of not less than 60 in. (1525 mm), provided that the fire resistance rating is maintained and the exposed outer and inner faces of such walls are constructed of limited-combustible or noncombustible materials.

7.2.5.6.8 Exterior Nonbearing Walls. Exterior nonbearing walls tested in accordance with, and meeting the conditions of acceptance of, NFPA 285 shall be permitted.

7.2.6 Type V (111 or 000) Construction. Type V (111 or 000) construction shall be that type in which structural elements, walls, arches, floors, and roofs are entirely or partially of wood or other approved material.

7.2.7 Fire Resistance Rating Requirements for Structural Elements.

7.2.7.1 Fire resistance protection shall be provided for structural elements as set forth in this chapter and other chapters of this *Code*.

7.2.7.2 Structural elements shall meet the requirements of 7.2.7.2.1 through 7.2.7.2.3.

7.2.7.2.1 Structural elements, floors, and bearing walls shall have a fire resistance rating not less than the fire resistance rating required for the structural element, bearing or nonbearing wall, floor, or roof they support.

7.2.7.2.2 Structural elements, floors, and bearing walls shall be required to have only the fire resistance rating required for the construction classification of the building, provided that both of the following criteria are met:

(1) The structural elements support nonbearing wall or partition assemblies having a required fire resistance rating of 1 hour or less.
(2) The structural elements do not serve as exit enclosures, protection for vertical openings, or occupancy separations.

7.2.7.2.3 Structural elements, such as girders, beams, trusses, and spandrels, that have direct connections to columns carrying gravity loads, and that are essential to the stability of the building as a whole, shall have a fire resistance rating not less than that of the columns to which they are connected.

7.2.7.3 Structural elements required to have a fire resistance rating and that support more than two floors, one floor and roof, a bearing wall, or a nonbearing wall more than two stories high shall be individually protected on all sides for their full length with materials providing the required fire resistance rating.

7.2.7.4 Structural elements, other than those specified in 7.2.7.3, required to have a fire resistance rating shall be protected by individual encasement, or by membrane or ceiling protection in accordance with Section 8.6, or by a combination of both.

7.2.7.5 In addition to the requirements of 7.2.7.3 and 7.2.7.4, columns shall meet the following requirements:

(1) Where columns require a fire resistance rating, the entire column, including its connections to beams or girders, shall be individually protected.
(2) Where the column extends through a ceiling, the fire-resistive protection provided for the column shall be continuous from the top of the floor through the ceiling space to the top of the column.

7.2.7.6 The required thickness and construction of fire-resistive materials or assemblies enclosing trusses shall be based on one of the following:

(1) Results of full-scale tests or combinations of tests on truss components
(2) Approved calculations based on such tests to verify that the assembly is provided with the required fire resistance rating in accordance with 8.2.3

7.2.7.7 The fire resistance rating required for external structural elements located beyond the perimeter of the building floor area shall be permitted to be calculated by using analytical methods in accordance with the provisions set forth in 8.2.3.

7.2.7.8 Structural elements within exterior walls or located along the exterior perimeter of a building or structure shall have a fire resistance rating as required by Table 7.2.1.1 for exterior bearing walls based on the type of construction.

7.2.7.9 Structural elements within an exterior wall located where openings are not permitted, or where protection of openings is required in accordance with 7.3.5, shall have a fire resistance rating based on protection against exterior fire exposure as required for exterior bearing walls or the structural element, whichever requires the greater fire resistance rating.

7.2.7.10 The edges of lugs, brackets, rivets, and bolt heads attached to structural elements shall be permitted to extend to within 1 in. (25 mm) of the surface of the fire-resistive protection.

7.2.7.11 Conduits, pipes, or ducts shall not be embedded within the required fire-resistive protection of any structural elements requiring individual encasement to achieve the required fire resistance rating.

7.2.7.12 Fire-resistive materials covering columns required to have a fire resistance rating, where exposed to impact damage by moving vehicles, handling of merchandise, or by other means, shall be protected from damage.

7.3 Exterior Walls.

7.3.1 General. Exterior walls shall be designed and constructed in accordance with Chapter 37 and Section 7.3.

7.3.2 Fire Resistance Rating of Exterior Walls.

7.3.2.1 Exterior walls shall have a fire resistance rating based on Table 7.2.1.1 and Table 7.3.2.1, whichever is greater.

7.3.2.2 The fire resistance rating requirements of Table 7.3.2.1 shall not apply to exterior walls of one- and two-family dwellings having a horizontal separation of more than 60 in. (1525 mm).

7.3.3 Continuity. Exterior walls required to be fire rated by Table 7.3.2.1 because of horizontal separation shall be continuous from the foundation to not less than 30 in. (760 mm) above the roof, except where otherwise permitted by 37.1.3.1.

Copyright National Fire Protection Association
Provided by IHS under license with NFPA
No reproduction or networking permitted without license from IHS
Not for Resale

Table 7.3.2.1 Fire Resistance Ratings for Exterior Walls (hr)

Occupancy Classification	Horizontal Separation ft (m)				Opening Protectives
	0 to 5 (0 to 1.5)	>5 to ≤10 (>1.5 to ≤3)	>10 to ≤30 (>3 to ≤9)	>30 (>9)	
Assembly, educational, day care, health care, ambulatory health care, detention and correctional, residential, residential board and care, business, industrial, and storage occupancies with low hazard contents	1	1	0	0	See Table 7.3.5(a).
Mercantile and industrial and storage occupancies with ordinary hazard contents	2	1	0	0	See Table 7.3.5(b).
Industrial and storage occupancies with high hazard contents exceeding the maximum allowable quantities per control area as set forth in 34.1.3 and complying with Protection Level 1, Protection Level 2, or Protection Level 3	See Chapter 34 for minimum requirements.				
Industrial and storage occupancies with high hazard contents exceeding the maximum allowable quantities per control area as set forth in 34.1.3 and complying with Protection Level 4 or Protection Level 5	3	2	1	0	See Table 7.3.5(b).

7.3.4 Horizontal Separation.

7.3.4.1 Horizontal separation shall be measured at a 90-degree angle to the exterior wall.

7.3.4.2 Imaginary Line.

7.3.4.2.1 Where two or more buildings are located on the same lot, the horizontal separation shall be measured from the exterior wall to an imaginary line drawn between the exterior walls of the adjacent buildings.

7.3.4.2.2 The imaginary line shall be placed at a distance from the facing exterior wall of the adjacent building that is equal to the horizontal separation applicable for that wall based on its fire resistance rating and protection of openings.

7.3.4.3 Where the exterior wall is an irregular vertical shape, the following criteria shall be met:

(1) The horizontal separation shall be determined by measuring from a vertical plane that is located so that no portion of the exterior wall is between such vertical plane and the line to which the horizontal separation is measured.
(2) The area of openings shall be determined from the projection of the openings in the exterior wall onto the vertical plane.

7.3.5 Openings. Where an exterior wall is required to have a fire resistance rating as determined by Table 7.3.2.1, the area of openings in exterior walls shall not exceed that permitted by Section 7.3 and Table 7.3.5(a) or Table 7.3.5(b).

7.3.5.1 The area of unprotected openings in an exterior wall shall be the aggregate of unprotected openings expressed as a percentage of the area of the exterior wall.

7.3.5.2 When required by Table 7.3.2.1 to have a fire protection rating, opening protectives shall comply with the requirements of Section 8.7.

7.3.5.3 When required by Table 7.3.2.1 to have a fire protection rating, penetrations shall comply with the requirements of Section 8.8.

7.3.5.4 The area of an exterior wall shall be calculated as the length, edge to edge, of the exterior wall multiplied by the measurement from the finished ground level to the uppermost ceiling.

7.3.5.5 The area of unprotected openings permitted by Table 7.3.5(a) and Table 7.3.5(b) shall be permitted to be doubled under either of the following conditions:

(1) Where the building is protected throughout with an approved, electrically supervised automatic sprinkler system in accordance with NFPA 13, NFPA 13D, and NFPA 13R
(2) Where the openings are protected with a fire window assembly or other listed opening protectives having a fire protection rating in accordance with Table 7.3.5.5

7.3.6 Light-transmitting plastics used in exterior walls shall be in accordance with Section 48.7.

7.3.7 Lintels used in exterior walls shall be in accordance with 37.1.2.

Copyright National Fire Protection Association
Provided by IHS under license with NFPA
No reproduction or networking permitted without license from IHS
Not for Resale

Table 7.3.5(a) Maximum Allowable Area of Unprotected Openings (percentage of exterior walls) — for Assembly, Educational, Day-Care, Health Care, Ambulatory Health Care, Detention and Correctional, Residential, Residential Board and Care, Business, Industrial, and Storage Occupancies with Low Hazard Contents as Required by Table 7.3.2.1

Horizontal Separation (ft)	Maximum Area of Exposing Building Face (ft^2)																		
	100	150	200	250	300	400	500	600	700	800	900	1000	1500	2000	2500	3500	5000	10,000	≥20,000
0	0	0	0	0	0	0	0	0	0	0	0	0	0	0	0	0	0	0	0
3	0	0	0	0	0	0	0	0	0	0	0	0	0	0	0	0	0	0	0
4	9	8	8	8	8	7	7	7	7	7	7	7	7	7	7	7	7	7	7
5	12	11	10	9	9	9	8	8	8	8	8	8	7	7	7	7	7	7	7
6	18	15	13	12	11	10	10	9	9	9	9	8	8	8	8	7	7	7	7
7	25	20	17	15	14	12	11	11	10	10	10	9	9	8	8	8	8	7	7
8	33	25	21	19	17	15	14	13	12	11	11	11	10	9	9	8	8	7	7
9	43	32	27	23	21	18	16	15	14	13	12	12	11	10	9	9	8	8	7
10	55	40	33	28	25	21	19	17	16	15	14	13	12	11	10	9	9	8	7
>10	100	100	100	100	100	100	100	100	100	100	100	100	100	100	100	100	100	100	100

For SI units, 1 ft = 0.305 m; 1 ft^2 = 0.093 m^2.

Table 7.3.5(b) Maximum Allowable Area of Unprotected Openings (percentage of exterior wall) — for Mercantile and Industrial and Storage Occupancies with Ordinary Hazard Contents, and Industrial and Storage Occupancies with High Hazard Contents Exceeding the MAQ per Control Area as Set Forth in 34.1.3 and Complying with Protection Level 4 and Protection Level 5 as required by Table 7.3.2.1

Horizontal Separation (ft)	Maximum Area of Exposing Building Face (ft^2)																		
	100	150	200	250	300	400	500	600	700	800	900	1000	1500	2000	2500	3500	5000	10,000	≥20,000
0	0	0	0	0	0	0	0	0	0	0	0	0	0	0	0	0	0	0	0
3	0	0	0	0	0	0	0	0	0	0	0	0	0	0	0	0	0	0	0
4	4	4	4	4	4	4	4	4	4	4	4	4	4	4	4	4	4	4	4
5	6	5	5	5	5	4	4	4	4	4	4	4	4	4	4	4	4	4	4
6	9	7	7	6	6	5	5	5	5	4	4	4	4	4	4	4	4	4	4
7	12	10	8	8	7	6	6	5	5	5	5	5	4	4	4	4	4	4	4
8	17	13	11	9	9	7	7	6	6	6	5	5	5	4	4	4	4	4	4
9	21	16	13	12	10	9	8	7	7	7	6	6	5	5	5	4	4	4	4
10	27	20	16	14	12	11	9	8	8	7	7	7	6	5	5	5	4	4	4
15	69	48	38	31	27	21	18	16	14	13	12	12	9	8	7	6	6	5	4
20	100	91	70	57	48	38	31	27	24	22	20	18	16	12	10	9	7	6	5
25		100	100	91	77	59	48	41	36	32	29	27	20	16	14	11	9	7	5
30				100	100	86	59	56	52	46	42	38	27	22	18	15	12	8	6
>30						100	100	100	100	100	100	100	100	100	100	100	100	100	100

For SI units, 1 ft = 0.305 m; 1 ft^2 = 0.093 m^2.

Copyright National Fire Protection Association
Provided by IHS under license with NFPA
No reproduction or networking permitted without license from IHS
Not for Resale

Table 7.3.5.5 Minimum Fire Protection Ratings for Exterior Opening Protectives

Wall Fire Resistance Rating (hr)	Fire Protection Rating (hr)
2	1½
1	¾

7.3.8 Parapets used in exterior walls shall be in accordance with 37.1.3.

7.3.9 Vertical separation of exterior openings used in exterior walls shall be in accordance with 37.1.4.

7.3.10 Projections used in exterior walls shall be in accordance with Section 37.2.

7.3.11 Metal composite materials used in exterior walls shall be in accordance with Section 37.4.

7.3.12 Exterior insulation and finish systems used in exterior walls shall be in accordance with Section 37.5.

7.4 Height and Area Requirements.

7.4.1 General. Except as modified in Sections 7.4 through 7.6, the heights and areas of buildings, based on their intended occupancy and type of construction classification, shall not exceed the allowable heights and areas set forth in Table 7.4.1 where the values in Table 7.4.1 for sprinklered buildings apply to buildings protected throughout with an approved, electrically supervised automatic sprinkler system in accordance with NFPA 13.

Table 7.4.1 Allowable Building Height and Area

Construction Type	TYPE I				TYPE II						TYPE III				TYPE IV		TYPE V			
	442		332		222		111		000		211		200		2HH		111		000	
	S	N	S	N	S	N	S	N	S	N	S	N	S	N	S	N	S	N	S	N
Maximum building height (ft)	UL	UL	420	400	180	160	85	65	75	55	85	65	75	55	85	65	70	50	60	40
OCCUPANCY																				
Assembly >1000	UL	4	UL	4	12	4	3	2	1	NP	3	2	NP	NP	3	2	3	2	NP	NP
	UL		UL		UL		15500		8500		14000		NP		15000		11500		NP	
Assembly >300	UL	4	UL	4	12	4	4	3	2	1	4	2	1	1	4	2	4	2	1	1
	UL		UL		UL		15500		8500		14000		8500		15000		11500		5500	
Assembly ≤300	UL	7	UL	7	12	7	4	3	2	1	4	3	2	1	4	3	4	3	2	1
	UL		UL		UL		15500		8500		14000		8500		15000		11500		5500	
Assembly, outdoor	UL	UL	UL	UL	UL	UL	UL	UL	UL	UL	4	3	3	2	4	3	3	2	2	1
	UL		UL		UL		UL		UL		UL		UL		UL		UL		UL	
Business	UL	UL	UL	UL	12	11	6	5	5	4	6	5	5	4	6	5	4	3	3	2
	UL		UL		UL		37500		23000		28500		19000		36000		18000		9000	
Board & Care, large	UL	NP	UL	NP	12	NP	3	NP	2	NP	2	NP	1	NP	2	NP	2	NP	1	NP
	UL		UL		55000		19000		10000		16500		10000		18000		10500		4500	
Board & Care, small	UL	UL	UL	UL	12	11	5	4	5	4	5	4	5	4	5	4	4	3	3	2
	UL		UL		UL		24000		16000		24000		16000		20500		12000		7000	
Day Care	UL	2	UL	2	12	2	6	1	4	1	4	1	2	1	2	1	4	1	2	1
	UL		UL		60500		26500		13000		23500		13000		25500		18500		9000	
Detention & Correctional	UL	7	UL	7	12	7	2	2	2	NP	2	2	2	NP	2	2	2	2	2	NP
	UL		UL		UL		15000		10000		10500		7500		12000		7500		5000	
Educational	UL	UL	UL	UL	12	5	4	3	3	2	4	3	3	2	4	3	2	1	2	1
	UL		UL		UL		26500		14500		23500		14500		25500		18500		9500	
Health Care	UL	NP	UL	NP	12	NP	3	NP	1	NP	1	NP	NP	NP	1	NP	1	NP	NP	NP
	UL		UL		UL		15000		11000		12000		NP		12000		9500		NP	
Health care, Ambulatory	UL	UL	UL	UL	12	11	6	5	5	1	6	5	5	1	6	5	4	3	3	1
	UL		UL		UL		37500		23000		28500		19000		36000		18000		9000	

(continues)

Copyright National Fire Protection Association
Provided by IHS under license with NFPA
No reproduction or networking permitted without license from IHS
Not for Resale

Table 7.3.5.5 *Continued*

Construction Type	TYPE I				TYPE II						TYPE III				TYPE IV		TYPE V			
	442		332		222		111		000		211		200		2HH		111		000	
	S	N	S	N	S	N	S	N	S	N	S	N	S	N	S	N	S	N	S	N
Industrial, ord. hazard	UL	UL	UL	UL	12	11	5	4	3	2	4	3	3	2	5	4	3	2	2	1
	UL		UL		UL		25000		15500		19000		12000		33500		14000		8500	
Industrial, low hazard	UL	UL	UL	UL	12	11	6	5	4	3	5	4	4	3	6	5	4	3	3	2
	UL		UL		UL		37500		23000		28500		18000		50500		21000		13000	
Mercantile	UL	UL	UL	UL	12	11	5	4	5	4	5	4	5	4	5	4	4	3	2	1
	UL		UL		UL		21500		12500		18500		12500		20500		14000		9000	
Residential	UL	UL	UL	UL	12	11	5	4	5	4	5	4	5	4	5	4	4	3	3	2
	UL		UL		UL		24000		16000		24000		16000		20500		12000		7000	
Residential, 1- & 2- family	UL	UL	UL	UL	12	11	5	4	5	4	5	4	5	4	5	4	4	3	3	2
	UL		UL		UL		UL		UL		UL		UL		UL		UL		UL	
Storage, ord. hazard	UL	UL	UL	UL	12	11	5	4	4	3	4	3	4	3	5	4	4	3	2	1
	UL		UL		48000		26000		17500		26000		17500		25500		14000		9000	
Storage, low hazard	UL	UL	UL	UL	12	11	6	5	5	4	5	4	5	4	6	5	5	4	3	2
	UL		UL		79000		39000		26000		39000		26000		38500		21000		13500	
HIGH HAZARD CONTENTS																				
High Hazard Contents Not Requiring Protection Level 1 through Protection Level 5	Use values for appropriate occupancy class. For industrial or storage occupancies, use values for ordinary hazard.																			
Protection Level 1	1	NP	1	NP	1	NP	1	NP	1	NP	1	NP	1	NP	1	NP	1	NP	NP	NP
	21000		21000		16500		11000		7000		9500		7000		10500		7500		NP	
Protection Level 2	UL	NP	UL	NP	3	NP	2	NP	1	NP	2	NP	1	NP	2	NP	1	NP	1	NP
	21000		21000		16500		11000		7000		9500		7000		10500		7500		3000	
Protection Level 3	UL	NP	UL	NP	6	NP	4	NP	2	NP	4	NP	2	NP	4	NP	2	NP	1	NP
	UL		UL		60000		26500		14000		17500		13000		25500		10000		5000	
Protection Level 4	UL	NP	UL	NP	8	NP	6	NP	4	NP	6	NP	4	NP	6	NP	4	NP	3	NP
	UL		UL		UL		37500		17500		28500		17500		36000		18000		6500	
Protection Level 5	4	NP	4	NP	4	NP	3	NP	3	NP	3	NP	3	NP	3	NP	3	NP	2	NP
	UL		UL		UL		37500		23000		28500		19000		36000		18000		9000	

For SI units, 1 ft = 0.3048 m; 1 ft^2 = 0.093 m^2.

S: Allowable building height in feet and allowable number of stories above grade in buildings protected with an automatic sprinkler system as specified in 7.4.1.

N: Allowable building height in feet and allowable number of stories above grade in buildings not protected with an automatic sprinkler system as specified in 7.4.1.

UL: Unlimited.

NP: Not permitted.

Note: Within each occupancy category, the top row refers to the allowable number of stories above grade, and the bottom row refers to the allowable area per story.

--`,,```,,,,````-`-`,,`,,`,`,,`---

Copyright National Fire Protection Association
Provided by IHS under license with NFPA
No reproduction or networking permitted without license from IHS Not for Resale

7.4.1.1 Multiple Occupancies. In other than buildings containing high hazard contents requiring Protection Level 1, Protection Level 2, Protection Level 3, Protection Level 4, or Protection Level 5, where the building is occupied for two or more uses not included in the same occupancy, the building, or portion thereof, shall comply with 7.4.1.1.1, 7.4.1.1.2, or a combination thereof.

7.4.1.1.1 Mixed Occupancies. Buildings with mixed occupancies complying with 6.2.3 shall have their required type of construction determined by applying the most restrictive type of construction to the entire building in accordance with Sections 7.4 through 7.6 for each of the occupancies.

7.4.1.1.2 Separated Occupancies. Buildings with separated occupancies complying with 6.2.4 shall have their required type of construction determined in accordance with 7.4.1.1.2.1 and 7.4.1.1.2.2.

7.4.1.1.2.1 Each separated occupancy shall comply with the story and height limitations of Sections 7.4 through 7.6 based on the location of the occupancy in the building.

7.4.1.1.2.2 For each story in the building, the sum of the ratios of the per story area of each separated occupancy divided by the allowable area per story as determined by Table 7.4.1, and as modified by 7.6.2, shall not exceed 1.0.

7.4.1.2 Areas with High Hazard Contents. The separation of areas containing high hazard contents requiring Protection Level 1, Protection Level 2, Protection Level 3, Protection Level 4, or Protection Level 5 shall be in accordance with Chapter 34.

7.4.1.3 Special Requirements.

7.4.1.3.1 Mall Buildings. The height and area of mall buildings shall comply with Section 27.4.4.

7.4.1.3.2 Open Parking Structures. The height and area of open parking structures of Type I and Type II construction shall be governed by NFPA 88A, *Standard for Parking Structures*, and 30.8.1.6.6.

7.4.1.3.3 Small Board and Care Occupancies. For board and care occupancies, the values in Table 7.4.1 for sprinklered buildings shall also apply to buildings four stories or less in height that are protected throughout with an approved, electrically supervised sprinkler system in accordance with NFPA 13R.

7.4.1.3.4 Airport Traffic Control Towers.

7.4.1.3.4.1 Airport traffic control towers with cab floor areas not exceeding 1500 ft^2 (140 m^2) per story shall be permitted to be constructed in accordance with Table 7.4.1.3.4.1.

7.4.1.3.4.2 Height shall be measured from grade to cab floor.

Table 7.4.1.3.4.1 Allowable Building Height and Area for Airport Traffic Control Towers

Type of Construction	Height		Area per Story	
	ft	m	ft^2	m^2
I (442)	UL	UL	1500	140
I (332)	UL	UL	1500	140
II (222)	240	73	1500	140
II (111)	100	30	1500	140
II (000)	85	26	1500	140
III (211)	65	20	1500	140

UL: Unlimited.

7.4.1.3.5 Special Industrial and Storage Facilities.

7.4.1.3.5.1 The height and area of buildings and structures designed and constructed in accordance with NFPA 61, *Standard for the Prevention of Fires and Dust Explosions in Agricultural and Food Processing Facilities*, NFPA 120, *Standard for Fire Prevention and Control in Coal Mines*, NFPA 654, *Standard for the Prevention of Fire and Dust Explosions from the Manufacturing, Processing, and Handling of Combustible Particulate Solids*, and NFPA 664, *Standard for the Prevention of Fires and Explosions in Wood Processing and Woodworking Facilities*, shall be governed by Table 7.4.1.3.5.1.

Table 7.4.1.3.5.1 Height and Area Requirements

Type of Construction	Height		Area	
	ft	m	ft^2	m^2
I (442, 332)	UL	UL	UL	UL
II (222, 111, 000)	UL	UL	UL	UL
III (211, 200)	See Table 7.4.1.		See Table 7.4.1.	
IV (2HH)	65	20	See Table 7.4.1.	
V (111, 000)	See Table 7.4.1.		See Table 7.4.1.	

UL: Unlimited.

7.4.1.3.5.2 For coal preparation plants designed and constructed in accordance with NFPA 120, and grain handling and processing facilities designed and constructed in accordance with NFPA 61, where structures of Type IV construction are surrounded on all sides by public way or open space of at least 60 ft (18 m) in width, the height shall be permitted to be increased by 20 ft (6100 mm).

7.4.1.3.5.3 Frangible Building. A frangible building containing high hazard contents requiring Protection Level 1 or Protection Level 2 shall not be required to comply with the other provisions of Section 7.4, provided that it complies with all of the following conditions:

(A) The allowable area of a frangible building is less than or equal to 400 ft^2 in floor area, or the building and its use comply with NFPA 1124, *Code for the Manufacture, Transportation, Storage, and Retail Sales of Fireworks and Pyrotechnic Articles*, and the floor area does not exceed that allowed in Table 7.4.1.

(B) The frangible building is a maximum of one story in height above grade without any basements.

(C)* The frangible building has a maximum occupant load of two people, unless the building and its use comply with NFPA 1124.

(D) The frangible building is separated in accordance with Chapter 34, unless the building and its use comply with NFPA 1124.

7.4.1.3.5.4 Detached Unprotected Storage Buildings. Detached unprotected storage buildings containing high hazard contents requiring Protection Level 3 and complying with 34.3.5.5 shall not be required to comply with Section 7.4, provided that they comply with the following conditions:

Copyright National Fire Protection Association
Provided by IHS under license with NFPA
No reproduction or networking permitted without license from IHS
Not for Resale

(1) The allowable area of the building does not exceed that allowed in Table 7.4.1.
(2) The building is a maximum of one story in height above grade without basements.

7.4.1.3.6 Aircraft Hangars. The height and area requirements for aircraft hangars designed and constructed in accordance with NFPA 409, *Standard on Aircraft Hangars*, shall not be required to comply with the requirements of Section 7.4.

7.4.1.3.7* Power-Generation Structures. Structures of Type I or Type II construction used exclusively for the enclosure of steam generators, steam turbines, gas turbines, heat recovery generators, and flue gas treatment equipment shall be permitted to be of unlimited height and area when special hazards are protected by an approved automatic suppression system in accordance with NFPA 11, *Standard for Low-, Medium-, and High-Expansion Foam*, NFPA 12, *Standard on Carbon Dioxide Extinguishing Systems*, NFPA 13, *Standard for the Installation of Sprinkler Systems*, NFPA 15, *Standard for Water Spray Fixed Systems for Fire Protection*, NFPA 16, *Standard for the Installation of Foam-Water Sprinkler and Foam-Water Spray Systems*, NFPA 17, *Standard for Dry Chemical Extinguishing Systems*, NFPA 750, *Standard on Water Mist Fire Protection Systems*, or NFPA 2001, *Standard on Clean Agent Fire Extinguishing Systems*.

7.4.2 Allowable Areas.

7.4.2.1 Allowable Area per Story. The allowable area per story (A_a) for any individual story in a building shall not exceed the allowable area specified in Table 7.4.1, as modified by applicable increases determined in accordance with 7.6.2.

7.4.2.2 Basements. The area per story of basements shall not be required to be included in the total allowable building area, provided that the area per story does not exceed the area allowed for a single-story building based on the occupancy and type of construction of the building.

7.4.2.3 Multiple Types of Construction. Where a building is constructed of two or more types of construction not separated by fire walls, the total area of the building shall not exceed the least maximum allowable building area, based on the occupancy and the types of construction of the building.

7.4.3 Height and Number of Stories.

7.4.3.1 Allowable Building Height and Number of Stories. The allowable building height and number of stories of a building shall be determined based on the use and occupancy and the type of construction of the building and shall not exceed the allowable heights specified in Table 7.4.1, except as provided for in 7.4.3 and as modified by Section 7.5.

7.4.3.2 Building Height. The height of a building shall be measured from grade to the highest finish roof surface in the case of flat roofs or to the average height of the highest sloped roof.

7.4.3.3 Number of Stories. The number of stories shall be counted starting with the first story above grade and ending with the highest occupiable story containing the occupancy considered.

7.4.3.3.1 Interstitial spaces used solely for building or process systems directly related to the level above or below shall not be considered a separate story.

7.4.3.3.2 A mezzanine shall not be counted as a story for the purpose of determining the allowable number of stories.

7.4.3.4 Multiple Types of Construction. Where two or more types of construction exist in the same building, the height of the entire building shall not exceed the least height permitted, based on the occupancy for the types of construction used in the building, except as modified by 7.4.3.6.5, 7.4.3.6.6, 7.4.3.6.7, or 7.4.3.6.8.

7.4.3.5 Underground Buildings All structural members up to and including the floor of the lowest level of discharge of underground buildings more than 30 ft (9100 mm) below or more than one level below the lowest level of exit discharge shall be Type I or Type II (222) construction.

7.4.3.6 Special Height Requirements.

7.4.3.6.1 Towers, Spires, Steeples, and Other Architectural Embellishments. Towers, spires, steeples, and other architectural embellishments erected as part of a building and not used for habitation or storage shall be consistent with the required type of construction for the building and shall meet the requirements of 7.4.3.6.1.1 and 7.4.3.6.1.2.

7.4.3.6.1.1 Towers, spires, steeples, and other architectural embellishments shall not be limited in height where constructed entirely of noncombustible materials.

7.4.3.6.1.2 Towers, spires, and steeples shall extend not more than 20 ft (6100 mm) above the height limit permitted in Table 7.4.1 where constructed of combustible materials.

7.4.3.6.2 Aircraft Hangars. The height of one-story aircraft hangars shall not be limited where the building is surrounded by public space, streets, or permanent open yards not less in width than 1½ times the height of the building and where the building is protected with an approved, electrically supervised sprinkler system in accordance with NFPA 13. *(See Chapters 29 and 30 for special occupancy requirements.)*

7.4.3.6.3* Low Hazard Industrial Processes Requiring Unusual Heights. Buildings and structures of Type I or Type II construction, or buildings and structures protected throughout with an approved, electrically supervised automatic sprinkler system in accordance with NFPA 13, that are designed to house low hazard industrial processes that require unusual heights to accommodate craneways or special machinery and equipment shall be permitted to be unlimited in height.

7.4.3.6.4 Rack Storage Buildings. In other than buildings containing high hazard contents requiring Protection Level 1, Protection Level 2, Protection Level 3, Protection Level 4, or Protection Level 5, one-story buildings and structures used for rack storage shall not be limited in height, provided that all of the following requirements are met:

(1) The building shall be of Type II construction.
(2) The building shall not be open to the public.
(3) The building shall conform to the requirements of 7.6.3.3.

7.4.3.6.5 Enclosed Parking Structures with Occupancies Above. A basement or first story above grade plane of a building shall be considered as a separate and distinct building for the purpose of determining the limitation on number of stories and type of construction, provided that all of the following conditions are met:

(1) The basement or first story above grade plane shall be of Type I construction and shall be separated from the building above with a horizontal assembly having a minimum 3-hour fire resistance rating.

Copyright National Fire Protection Association
Provided by IHS under license with NFPA
No reproduction or networking permitted without license from IHS
Not for Resale

(2) Shaft, stairway, ramp, or escalator enclosures through the horizontal assembly shall comply with either of the following conditions:
   (a) The enclosures shall have not less than a 2-hour fire resistance rating with opening protectives in accordance with Table 8.7.2.
   (b) Where the walls below the horizontal assembly have a minimum 3-hour fire resistance rating with opening protectives as required for walls forming a 3-hour fire barrier, the enclosure walls extending above the horizontal assembly shall be permitted to have a 1-hour fire resistance rating, provided that all of the following conditions are met:
      i. The building above the horizontal assembly is not required to be of Type I construction.
      ii. The enclosure connects less than four stories above the horizontal assembly.
      iii. The enclosure opening protectives above the horizontal assembly have a minimum 1-hour fire protection rating.

(3) The building above the horizontal assembly shall contain only business, mercantile, storage, or residential occupancies or assembly occupancies having an assembly room with an occupant load of less than 300.

(4) The building below the horizontal assembly shall be an enclosed or open parking structure used for the parking and storage of private motor vehicles, unless otherwise permitted by the following:
   (a) Entry lobbies, mechanical rooms, and similar uses incidental to the operation of the building shall be permitted.
   (b) Business, mercantile, and assembly occupancies having an assembly room with an occupant load of less than 300 shall be permitted in addition to those uses incidental to the operation of the building (including storage areas), provided that the entire structure below the horizontal assembly is protected throughout by an approved, electrically supervised automatic sprinkler system installed in accordance with NFPA 13.

(5) The maximum building height shall not exceed the limits set forth in Table 7.4.1 for the least restrictive type of construction involved.

7.4.3.6.6 Enclosed Parking Structure with Open Parking Structure Above. An enclosed parking structure located in the basement or first story below an open parking structure shall be classified as a separate and distinct building for the purpose of determining the type of construction, provided that the following conditions are met:

(1) The enclosed parking structure shall be of Type I or Type II construction and shall have a fire resistance rating at least equal to the fire resistance rating of the open parking structure.

(2) The height and the number of the floors above the basement shall be limited as specified in 30.8.1.6.

(3) The floor assembly between the enclosed parking structure and open parking structure shall be protected as required for the floor assembly of the enclosed parking structure.

(4) Openings in the floor assembly between the enclosed parking structure and open parking structure, except exit openings, shall not be required to be protected.

(5) The enclosed parking structure shall be used for the parking or storage of private motor vehicles, but shall be permitted to contain an office, a waiting room, and a toilet room having a total area of not more than 1000 ft^2 (93 m^2) and mechanical equipment rooms incidental to the operation of the building.

7.4.3.6.7 Open Parking Structure Beneath Occupancies Other than Assembly, Health Care, Detention and Correctional, and Ambulatory Health Care Occupancies.

7.4.3.6.7.1 Where a maximum one-story above-grade parking structure, enclosed, open, or a combination thereof, of Type I or Type II (222) construction or open Type IV construction, with grade entrance, is provided under a building of occupancies other than assembly, health care, detention and correctional, and ambulatory health care occupancies, the number of stories to be used in determining the minimum type of construction shall be permitted to be measured from the floor above such a parking area.

7.4.3.6.7.2 The floor assembly between the parking structure and occupancies other than assembly, health care, detention and correctional, and ambulatory health care occupancies above shall comply with the following:

(1) The floor assembly shall be of type of construction required for the parking structure.

(2) The floor assembly shall provide a fire resistance rating not less than the mixed occupancy separation required in Table 6.2.4.1(a) and Table 6.2.4.1(b).

7.4.3.6.8 Open Parking Structure Beneath Other Occupancies.

7.4.3.6.8.1 Limitations.

(A) Open parking structures constructed under other occupancies shall not exceed the height and area limitations permitted under 30.8.1.6.

(B) The height of the portion of the building above the open parking structure shall not exceed the limitations in Section 7.4 for the upper occupancy.

(C) The height, in both feet and stories, of the portion of the building above the open parking structure shall be measured from grade and shall include both the open parking structure and the portion of the building above the parking structure.

7.4.3.6.8.2 Fire Separation. Fire separation assemblies between the parking occupancy and the upper occupancy shall correspond to the required fire resistance rating prescribed in Table 6.2.4.1(a) and Table 6.2.4.1(b) for the uses involved.

7.4.3.6.8.3 Type of Construction. The type of construction used shall apply to each occupancy individually, except that structural members, including main bracing within the open parking structure, that are necessary to support the upper occupancy shall be provided with the more restrictive fire resistance ratings of the use groups involved, as shown in Table 7.2.1.1.

7.4.3.6.8.4 Means of Egress. Means of egress for the upper occupancy shall conform to Chapter 11 and shall be separated from the parking occupancy by fire barriers having at least a 2-hour fire resistance rating, with self-closing doors in accordance with 8.7.2.

7.5 Height Increases Permitted.

7.5.1 General. The allowable building heights and allowable number of stories above grade of a building shall be as shown in Table 7.4.1, as modified in 7.4.3.6.

Copyright National Fire Protection Association
Provided by IHS under license with NFPA
No reproduction or networking permitted without license from IHS
Not for Resale

7.5.2 Residential Sprinkler Increase. For buildings classified as residential occupancies provided with an approved, electrically supervised automatic sprinkler system in accordance with NFPA 13R, the allowable height for nonsprinklered buildings shall be permitted to be increased by 20 ft (6100 mm), and the allowable number of stories above grade for nonsprinklered buildings shall be permitted to be increased by one story, provided that the building height does not exceed 60 ft (18 m) and the number of stories does not exceed four.

7.6 Area Increases Permitted.

7.6.1 General.

7.6.1.1 The allowable area per story specified in Table 7.4.1 shall be permitted to be increased in accordance with 7.6.2.

7.6.1.2 The area of buildings constructed in accordance with 7.6.3 shall not be limited.

7.6.2 Area Increase. The allowable area per story specified in Table 7.4.1 shall be permitted to be increased to account for frontage (I_f) and automatic sprinkler system protection (I_s) in accordance with the following equation:

$$A_a = A_t\left[1+\left(\frac{I_f}{100}\right)+\left(\frac{I_s}{100}\right)\right] \qquad \textbf{(7.6.2)}$$

where:
A_a = allowable area per story (ft^2 or m^2)
A_t = allowable area per story (ft^2 or m^2) in accordance with Table 7.4.1
I_f = percentage area increase for frontage, as determined in accordance with 7.6.2.1
I_s = percentage area increase for automatic sprinkler system protection, as determined in accordance with 7.6.2.2

7.6.2.1* Frontage Increase. Where a building has more than 25 percent of its perimeter fronting or facing on a public way or open space having a minimum width of 20 ft (6100 mm), the frontage increase shall be determined in accordance with the following equations:

$$l_f = \frac{\left\{100\left[\left(\frac{F_t}{P}\right)-0.25\right]W_w\right\}}{30}\text{(U.S. units)} \qquad \textbf{(7.6.2.1a)}$$

$$l_f = \frac{\left\{100\left[\left(\frac{F_t}{P}\right)-0.25\right]W_w\right\}}{9}\text{(SI units)} \qquad \textbf{(7.6.2.1b)}$$

where:
l_f = frontage area increase (percent)
F_t = sum of the building perimeter with a constant width (W_i) (ft or m) that is at least 20 ft (6100 mm)
P = building perimeter (ft or m)
W_w = weighted width (ft or m) = $\Sigma_{i=1}^{N}\left[(F_{si})(W_i)/F_t\right]$
N = number of sections of open space with a discretely different constant width (W_i) from other sections of open space
F_{si} = section of building perimeter fronting or facing a public way or open space with a constant width (W_i) (ft or m) that is at least 20 ft (6100 mm)
W_i = width of any section of public way or open space with a constant dimension (ft or m), as measured in accordance with 7.6.2.1.1 through 7.6.2.1.3

7.6.2.1.1 The dimension W_i shall be the distance, measured horizontally, between a building exterior wall and the adjacent property line or between a building exterior wall and the property line on the opposite side of a street, alley, or public way.

7.6.2.1.1.1 The dimension W_i shall be measured perpendicular from the building exterior wall.

7.6.2.1.1.2 Where walls of a building creating a court face each other, W_i shall be measured between facing exterior walls.

7.6.2.1.1.3 Where two or more buildings are located on the same lot, W_i shall be the distance, measured horizontally, between the facing exterior walls of the adjacent buildings.

7.6.2.1.2 The width limit (W_i) shall be a minimum of 20 ft (6100 mm), and the quantity (W_w) divided by 30 ft (9100 mm) shall not exceed 1.0 for all occupancies other than those specified in 7.6.2.1.3.

7.6.2.1.3 The width limit (W_i) shall be a minimum of 20 ft (6100 mm), and the quantity (W_w) divided by 30 ft (9100 mm) shall not exceed 2.0 for business, industrial, mercantile, and storage occupancies and assembly occupancies intended for viewing of indoor sporting events with spectator seating.

7.6.2.1.4 Frontage open space shall be in compliance with 7.6.2.1.4.1 and 7.6.2.1.4.2.

7.6.2.1.4.1 Open space shall be on the same lot as the building under consideration, or the space shall be dedicated for public use.

7.6.2.1.4.2 Open space shall be accessible by a fire department access road in accordance with 7.1.5.

7.6.2.2 Automatic Sprinkler System Protection Increase. Buildings other than those containing high hazard contents requiring Protection Level 1 or Protection Level 2, as specified in Chapter 34, and protected with an approved, electrically supervised automatic sprinkler system in accordance with NFPA 13 shall be permitted to have the following automatic sprinkler system protection increase (I_s) applied to the allowable area per story:

(1) 200 percent (I_s = 200) for buildings of two stories or more
(2) 300 percent (I_s = 300) for single-story buildings

7.6.2.3* Maximum Allowable Area per Story. The maximum allowable area per story shall be determined in accordance with 7.6.2.3.1, 7.6.2.3.2, 7.6.2.3.3, or a combination thereof.

7.6.2.3.1 Allowable Area Ratio for Single Occupancy Stories. For each story in a building, the allowable area ratio shall be the ratio of the floor area divided by the allowable area per story as determined by Table 7.4.1, as modified by 7.6.2, and shall not exceed 1.0.

7.6.2.3.2 Allowable Area Ratio for Mixed Occupancy Stories. For each story in a building, the allowable area ratio shall be the ratio of the floor area divided by the allowable area per story as determined by 7.4.1.1, Table 7.4.1, and as modified by 7.6.2 through 7.6.2.2, and shall not exceed 1.0.

7.6.2.3.3* Allowable Area Ratio for Separated Occupancy Stories. For each story in a building, the allowable area ratio shall be the sum of the ratio of the floor area of each separated

Copyright National Fire Protection Association
Provided by IHS under license with NFPA
No reproduction or networking permitted without license from IHS
Not for Resale

occupancy divided by the allowable area of each separated occupancy per story as determined by Table 7.4.1, as modified by 7.6.2, and shall not exceed 1.0.

7.6.2.3.4 Sum of the Allowable Area Ratios for All Stories.

7.6.2.3.4.1 Except as modified by 7.6.2.3.4.2, the sum of the allowable area ratios for all stories of a building shall not be greater than the following:

(1) 1.0 for one-story buildings
(2) 2.0 for two-story buildings
(3) 3.0 for three-story buildings

7.6.2.3.4.2* The sum of the allowable area ratios for all stories in buildings protected in accordance with NFPA 13R shall not be greater than the following:

(1) 1.0 for one-story buildings
(2) 2.0 for two-story buildings
(3) 3.0 for three-story buildings
(4) 4.0 for four-story buildings

7.6.3 Unlimited Area Building. The allowable area per story of a building and the maximum area of a building shall not be limited where the building is constructed in accordance with 7.6.3.1 through 7.6.3.9.

7.6.3.1 One-Story Building. A one-story building of Type II construction used as an industrial occupancy with low hazard contents, or as a storage occupancy with low hazard contents, shall not be limited in area where the building is surrounded and adjoined by public ways or yards not less than 60 ft (18 m) in width.

7.6.3.2 Sprinklered One-Story Building.

7.6.3.2.1 A one-story building used for business, industrial occupancies with ordinary hazard contents, or mercantile occupancies, and assembly uses intended for viewing of indoor sporting events with spectator seating shall not be limited in area where the building is provided with an approved, electrically supervised automatic sprinkler system in accordance with NFPA 13 and is surrounded and adjoined by public ways or yards not less than 60 ft (18 m) in width.

7.6.3.2.2 Sprinkler protection specified in 7.6.3.2.1 shall not be required in areas occupied for indoor participant sports, such as tennis, skating, swimming, and equestrian activities, provided that the following conditions are met:

(1) Exit doors directly to the outside are provided for occupants of the participant sports areas.
(2) The building is equipped with a fire alarm system with manual fire alarm boxes installed in accordance with Section 55.2.

7.6.3.3 Sprinklered One- or Two-Story Storage Building. A one- or two-story building used for storage of ordinary hazard contents shall not be limited in area, provided that both of the following requirements are met:

(1) The entire building is protected throughout with an approved, electrically supervised automatic sprinkler system installed in accordance with NFPA 13.
(2) The exterior walls face public ways or yards not less than 60 ft (18 m) in width.

7.6.3.4 Sprinklered Two-Story Building. A two-story building used for business, industrial, or mercantile occupancies shall not be limited in area where the building is provided with an approved, electrically supervised automatic sprinkler system installed in accordance with NFPA 13 and is surrounded and adjoined by public ways or yards not less than 60 ft (18 m) in width.

7.6.3.5 Reduced Open Space. The permanent open space of 60 ft (18 m) required in 7.6.3.1 through 7.6.3.4, 7.6.3.8, and 7.6.3.9 shall be permitted to be reduced to not less than 40 ft (12.2 m), provided the following requirements are met:

(1) The reduced open space shall not be permitted for more than 75 percent of the perimeter of the building.
(2) The exterior wall facing the reduced open space shall have a minimum fire resistance rating of 3 hours.
(3) Openings in the exterior wall, facing the reduced open space, shall have opening protectives with a fire protection rating of 3 hours.

7.6.3.6 High Hazard Contents. High hazard contents required to comply with Protection Level 2, Protection Level 3, Protection Level 4, or Protection Level 5 in accordance with Chapter 34, other than deflagration hazards that are required to be stored in detached buildings, shall be permitted in unlimited area buildings in accordance with the limitations of 7.6.3.6.1 through 7.6.3.6.4.

7.6.3.6.1 Fire areas located at the perimeter of the unlimited area building shall not exceed 10 percent of the area of the building nor the area limitations specified in Table 7.4.1, as modified by Section 7.6, based on the percentage of the perimeter of the fire area that fronts on a street or other unoccupied space.

7.6.3.6.2 Fire areas other than those specified in 7.6.3.6.1 shall not exceed 25 percent of the area limitations specified in Table 7.4.1.

7.6.3.6.3 Fire resistance rating requirements of fire barrier assemblies shall be in accordance with Table 34.3.2.3.

7.6.3.6.4 High hazard contents required to comply with Protection Level 2, Protection Level 3, Protection Level 4, or Protection Level 5 shall not be located higher than the height limits specified in Table 7.4.1.

7.6.3.7 Sprinklered One-Story Educational Building. A one-story building of Type II (111), Type II (000), Type III (211), or Type IV construction used for educational occupancies shall not be limited in area where the following criteria are met:

(1) Each classroom shall have not less than two means of egress, with one of the means of egress being a direct exit to the outside of the building.
(2) The building shall be equipped throughout with an approved, electrically supervised automatic sprinkler system in accordance with NFPA 13.
(3) The building shall be surrounded and adjoined by public ways or yards not less than 60 ft (18 m) in width.

7.6.3.8 Sprinklered One-Story Motion Picture Theaters. One-story motion picture theaters in buildings of Type II construction shall not be limited in area where the building is provided with an approved, electrically supervised automatic sprinkler system throughout in accordance with NFPA 13 and is surrounded and adjoined by public ways or yards not less than 60 ft (18 m) in width.

7.6.3.9 Sprinklered One-Story Assembly Building. A one-story assembly building used as an auditorium, church, community hall, dance hall, exhibition hall, gymnasium, lecture hall, indoor swimming pool, or tennis court of Type II construction

--`,,```,,,,````-`-`,,`,,`,`,,`---

Copyright National Fire Protection Association
Provided by IHS under license with NFPA
No reproduction or networking permitted without license from IHS
Not for Resale

shall not be limited in area where all the following criteria are met:

(1) The building shall not have a theatrical stage other than a raised platform.
(2) The building shall be equipped with an approved, electrically supervised automatic sprinkler system in accordance with NFPA 13.
(3) The assembly floor shall be located as follows:
   (a) At, or within, 21 in. (535 mm) of the level of the exterior exit discharge accessible from the main entrance/exit.
   (b) Within 21 in. (535 mm) of the level of the exterior exit discharge accessible from any of the required exits for buildings that do not have a main entrance/exit.
(4) All exits and exit discharges shall be level or provided with ramps to a public way.
(5) The building shall be surrounded and adjoined by public ways or yards not less than 60 ft (18 m) in width.

Chapter 8 Fire-Resistive Materials and Construction

8.1 General.

8.1.1 This chapter shall apply to fire protection features intended to restrict or resist the spread of fire and smoke beyond the compartment of fire origin.

8.1.2 Where required by other chapters of this *Code*, every building shall be divided into compartments to limit the spread of fire and restrict or resist the movement of smoke.

8.1.2.1* Fire compartments shall be formed with fire barrier walls that comply with Section 8.4 or horizontal assemblies that comply with Section 8.6, or a combination of both.

8.1.2.2 Smoke compartments shall be formed with smoke barriers that comply with Section 8.11.

8.2* Fire Resistance–Rated Construction.

8.2.1 General.

8.2.1.1 The fire resistance ratings of structural elements and building assemblies shall be determined in accordance with the prescriptive requirements of 8.2.2 based on the test procedures set forth in NFPA 251, *Standard Methods of Tests of Fire Endurance of Building Construction and Materials*, or other approved test methods or analytical methods in accordance with 8.2.3.

8.2.1.2 Materials used to construct fire resistance–rated elements and assemblies shall be limited to those permitted in this *Code*.

8.2.1.3 The fire resistance rating of an element or assembly determined by tests conducted in accordance with NFPA 251 or other approved test methods shall not be allowed to rely on an automatic fire protection system unless evaluated as an equivalency in accordance with Section 1.5 or as part of a performance-based option in accordance with Chapter 5.

8.2.1.4 Fire resistance–rated floor and roof assemblies shall be classified as restrained or unrestrained in accordance with NFPA 251 or ASTM E 119, *Standard Test Methods for Fire Tests of Building Construction and Materials*, or UL 263, *Standard for Fire Tests of Building Construction and Materials*.

8.2.2 Prescriptive Requirements.

8.2.2.1 Fire-Resistive Protection of Floors, Roofs, and Walls — General Requirements. Floors and roofs shall be designed and constructed in accordance with 8.2.2.2, 8.2.2.3, and Chapter 38.

8.2.2.2 Fire-Resistive Protection of Floors. Floors shall be protected as required for the type of construction in Table 7.2.1.1 and the special requirements based on the type of construction specified in Chapter 7.

8.2.2.3 Fire-Resistive Protection of Roofs.

8.2.2.3.1 Roofs shall be protected as required for the type of construction specified in Table 7.2.1.1 and Chapter 38.

8.2.2.3.2 Fire resistance–rated roofs shall be permitted to have openings as permitted for roofs in 8.6.2 and 8.6.3 and shall be permitted to have openings as otherwise permitted by this *Code* and 8.2.2.3.3.

8.2.2.3.3 Skylights.

8.2.2.3.3.1 Skylights and other penetrations through a fire resistance–rated roof deck shall be permitted to be unprotected, provided that the structural integrity of the fire resistance–rated roof construction is maintained.

8.2.2.3.3.2 Unprotected skylights shall not be permitted in roof construction required to be fire resistance rated in accordance with 8.3.2.14 or 8.3.3.6.

8.2.2.4 Walls.

8.2.2.4.1 Materials.

8.2.2.4.1.1 Fire-resistive materials and assemblies of materials for walls shall meet the fire resistance requirements of Chapter 7 and this chapter.

8.2.2.4.1.2 The fire-resistive materials, assemblies, and systems used shall be limited to those permitted in this *Code*.

8.2.2.4.2 Compliance. The construction materials and details for fire resistance–rated assemblies and systems for walls described shall comply with all other provisions of this *Code*, except as modified herein.

8.2.2.4.2.1* Fire resistance–rated glazing tested in accordance with NFPA 251 shall be permitted.

8.2.2.4.2.2 Fire resistance–rated glazing shall bear the identifier W-XXX, where XXX is the fire resistance rating in minutes.

8.2.2.4.2.3 The identification described in 8.2.2.4.2.2 shall be permanently affixed.

8.2.2.4.3 Nonsymmetrical Interior Walls.

8.2.2.4.3.1 Interior walls and partitions of nonsymmetrical construction shall be evaluated from both directions and assigned a fire resistance rating based on the shortest duration obtained in accordance with NFPA 251 when tested on both sides.

8.2.2.4.3.2 When the wall is tested with the least fire-resistive side exposed to the furnace, the wall shall not be required to be subjected to tests from the opposite side.

8.2.2.4.4 Nonsymmetrical Exterior Walls.

8.2.2.4.4.1 The required fire resistance rating of nonsymmetrical exterior walls shall be determined by exposure to the

Copyright National Fire Protection Association
Provided by IHS under license with NFPA
No reproduction or networking permitted without license from IHS
Not for Resale

test fire from both the interior and exterior sides independently for the entire duration of the fire test, except as modified by 8.2.2.4.5.

8.2.2.4.4.2 The assigned fire resistance rating for the exterior wall shall be the lesser of the two sides so tested.

8.2.2.4.5 Horizontal Separation. Exterior walls having a horizontal separation greater than 60 in. (1525 mm) shall be permitted to be tested for exposure to fire from the interior side only.

8.2.3 Analytical Methods.

8.2.3.1 General. Analytical methods utilized to determine the fire resistance rating of building assemblies shall comply with 8.2.3.2 or 8.2.3.3.

8.2.3.2 Calculations.

8.2.3.2.1* Where calculations are used to establish the fire resistance rating of structural elements or assemblies, they shall be permitted to be performed in accordance with ASCE/SFPE 29, *Standard Calculation Methods for Structural Fire Protection.*

8.2.3.2.2 Where calculations are used to establish the fire resistance rating of concrete or masonry elements or assemblies, the provisions of ACI 216.1/TMS 0216.1, *Standard Method for Determining Fire Resistance of Concrete and Masonry Assemblies,* shall be permitted to be used.

8.2.3.3 Methods.

8.2.3.3.1 Except for the method specified in 8.2.3.2, analytical methods used to calculate the fire resistance rating of building assemblies or structural elements shall be approved.

8.2.3.3.2 Where an approved analytical method is utilized to establish the fire resistance rating of a structural element or building assembly, the calculations shall be based on the fire exposure and acceptance criteria specified in NFPA 251.

8.3 High Challenge Fire Walls and Fire Walls. The provisions of 8.3.1 shall apply to high challenge (HC) fire walls and fire walls, unless modified by the provisions of 8.3.2 or 8.3.3, respectively, and shall hereafter be referred to in this section as walls.

8.3.1 General.

8.3.1.1* Design Loads. All walls and their supports shall be designed for loads in accordance with Chapter 35 of this *Code* and to withstand a minimum uniform load of 5 lbf/ft^2 (0.24 kPa) from either direction applied perpendicular to the face of the wall. [**221:**4.2]

8.3.1.2 Ducts and Air-Transfer Openings. The provisions of 8.8.8 shall govern the materials and methods of construction used to protect ducts and air-transfer openings in walls.

8.3.1.3* Double-Wall Assemblies. Where either wall of a double wall is laterally supported by a building frame with a fire resistance rating less than that required for the wall, double wall assemblies shall be considered to have a combined assembly fire resistance rating as specified in Table 8.3.1.3. [**221:**4.5]

8.3.1.4* Impact Damage. [**221:**4.6]

8.3.1.4.1 Where the wall is subject to impact damage from moving vehicles or the handling of merchandise or other activity, protection against impact damage shall be provided for an appropriate height but not less than 60 in. (1525 mm) from the finished floor. [**221:**4.6.1]

Table 8.3.1.3 Fire Resistance Ratings for Double Wall Assemblies

Fire Resistance Rating of Each Wall (hr)	Equivalent to Single Wall (hr)
3	4
2	3
1	2

[**221**: Table 4.5]

8.3.1.4.2 Where the fire-protective covering of a structural element required to have a fire resistance rating by 8.3.2.4.3 or 8.3.3.4.3 is subject to impact damage from moving vehicles, the handling of merchandise, or other activity, protection against impact damage shall be provided for an appropriate height but not less than 60 in. (1525 mm) from the finished floor. [**221:**4.6.2]

8.3.1.5 Joints. The provisions of Section 8.9 shall govern the materials and methods of construction used to protect joints within or between walls.

8.3.1.6 Opening Protectives. The provisions of Section 8.7 shall govern the materials and methods of construction used to protect openings in walls.

8.3.1.7 Penetrations. The provisions of Section 8.8 shall govern the materials and methods of construction used to protect through-penetrations and membrane penetrations, including fire dampers for ducts and air-transfer openings.

8.3.2 High Challenge Fire Walls.

8.3.2.1 General. High challenge (HC) fire walls shall meet the requirements of 8.3.2 and Sections 8.7 through 8.9.

8.3.2.2 Structural Stability. [**221:**5.2]

8.3.2.2.1 HC fire walls shall be designed and constructed to remain stable after the collapse of the structure due to fire on either side of the wall. [**221:**5.2.1]

8.3.2.2.2 HC fire walls constructed in compliance with the requirements of 8.3.2.3, 8.3.2.4, or 8.3.2.5 shall be deemed to provide the required stability. [**221:**5.2.2.]

8.3.2.2.3 HC fire walls shall be nonbearing. [**221:**5.2.3]

8.3.2.2.4 Structural framing within the plane of the wall shall be permitted to be load-bearing. [**221:**5.2.4]

8.3.2.3* Cantilevered HC Fire Walls. Cantilevered HC fire walls shall be entirely self-supported and nonbearing. [**221:**5.3]

8.3.2.3.1 There shall be no connections to the building(s) or contents on either side, other than to the flashing. [**221:**5.3.1]

8.3.2.3.2 Cantilevered HC fire walls shall be erected where there is a complete break in the structural framework. [**221:**5.3.2]

8.3.2.4* Tied HC Fire Walls. [**221:**5.4]

8.3.2.4.1 Placement. Tied HC fire walls shall be centered on a single column line or constructed between a double column line and shall be limited to one-story buildings. [**221:**5.4.1]

--`,,```,,,,````-`-`,,`,,`,`,,`---

Copyright National Fire Protection Association
Provided by IHS under license with NFPA
No reproduction or networking permitted without license from IHS
Not for Resale

8.3.2.4.2 Framework. [**221:**5.4.2]

8.3.2.4.2.1 Structural framing on either side of the wall shall line up horizontally and vertically and shall support the roof. [**221:**5.4.2.1]

8.3.2.4.2.2 The framework on each side of the HC fire wall shall be continuous or tied together through the wall. [**221:**5.4.2.2]

8.3.2.4.2.3 The framework on each side shall be designed so that it resists the maximum lateral pull that can be developed due to framework collapse in a fire on the opposite side. [**221:**5.4.2.3]

8.3.2.4.2.4 Tied HC fire walls shall be supported laterally by the building framework with flexible anchors. [**221:**5.4.2.4]

8.3.2.4.3 Fire Resistance Rating. [**221:**5.4.3]

8.3.2.4.3.1 Where centered on a single column line, structural framing at the column line shall have a fire resistance rating of not less than the required fire resistance rating of the HC fire wall. [**221:**5.4.3.1]

8.3.2.4.3.2 Where the wall is installed between double-column lines, structural framing along the first column line immediately on each side of the HC fire wall shall have a fire resistance rating of not less than the required fire resistance rating of the HC fire wall. [**221:**5.4.3.2]

8.3.2.5* Double HC Fire Walls. [**221:**5.5]

8.3.2.5.1 A double HC fire wall shall consist of two parallel walls. [**221:**5.5.1]

8.3.2.5.2 There shall be no connections, other than to the flashing, between the walls. [**221:**5.5.2]

8.3.2.5.3 Each wall that comprises a double HC fire wall shall be supported laterally by the building frame on its respective side and shall be independent of the other wall and framing on the opposite side. [**221:**5.5.3]

8.3.2.6 Fire Walls at Elevation Differences. Where the roofs on opposite sides of an HC fire wall are not at the same elevation, the HC fire wall assembly shall be arranged as described in either 8.3.2.6.1 or 8.3.2.6.2. [**221:**5.6]

8.3.2.6.1* The two buildings shall be separated by a double HC fire wall, with each wall extending from the foundation to above the roof of its respective building to form a parapet. [**221:**5.6.1]

8.3.2.6.2* A cantilevered HC fire wall shall be continuous from the foundation to the top of the parapet for the lower roof. [**221:**5.6.2]

8.3.2.6.2.1 The upper wall shall be supported by the framework of the higher building and shall be structurally independent of the cantilevered HC fire wall. [**221:**5.6.2.1]

8.3.2.6.2.2 The upper wall section shall be permitted to have an exterior fire resistance rating of 1 hour less than the required fire resistance rating of the lower cantilevered portion but not less than a 2-hour rating. [**221:**5.6.2.2]

8.3.2.7* Clearance. [**221:**5.7]

8.3.2.7.1 Clearance to allow for expansion of unprotected structural framework shall be provided between cantilevered HC fire walls and structural framework on both sides and between double HC fire walls. [**221:**5.7.1]

8.3.2.7.2 In buildings assigned to Seismic Design Category C, Seismic Design Category D, Seismic Design Category E, or Seismic Design Category F, as determined in accordance with ASCE/SEI 7, *Minimum Design Loads for Buildings and Other Structures*, sufficient separation shall be provided between cantilevered HC fire walls and adjacent framing on each side and between double HC fire walls to allow independent movements of the elements without contact. [**221:**5.7.2]

8.3.2.8 Opening Protectives. [**221:**5.8]

8.3.2.8.1 Maximum Area. The total width of all openings in HC fire walls shall not exceed 25 percent of the length of the wall in each story. [**221:**5.8.1]

8.3.2.8.2 Single Opening Size. Single opening protectives in HC fire walls shall not exceed the maximum size tested. [**221:**5.8.2]

8.3.2.8.3* Fire Doors. HC fire walls shall have each opening protected with two fire door assemblies. [**221:**5.8.3]

8.3.2.8.4* Double HC Fire Walls. Openings in double HC fire walls shall be protected in accordance with 8.3.2.8.4.1 or 8.3.2.8.4.2. [**221:**5.8.4]

8.3.2.8.4.1 One fire door shall be provided in each respective wall. [**221:**5.8.4.1]

8.3.2.8.4.2 Two fire doors within a vestibule, where the vestibule has a fire resistance rating greater than or equal to that required for the double HC fire wall. [**221:**5.8.4.2]

8.3.2.8.5* Material Handling Systems. Where material handling systems penetrate an HC fire wall, the system design shall provide a method to stop the material handling system and allow fire doors to close without obstruction. [**221:**5.8.5]

8.3.2.9* Penetrations in HC Fire Walls. [**221:**5.9]

8.3.2.9.1 Penetrations of HC fire walls shall only be permitted in accordance with 8.3.2.9. [**221:**5.9.1]

8.3.2.9.2 Unless permitted by 8.3.2.9.4, penetrations shall be positioned to pass through the wall no more than 36 in. (915 mm) above the finished floor level. [**221:**5.9.2]

8.3.2.9.2.1 A steel sleeve of a size to allow an approximate 1 in. (25 mm) clearance between the sleeve and the penetrating item shall be provided. [**221:**5.9.2.1]

8.3.2.9.2.2 The space between the sleeve and penetrating item (annular space) shall be filled as required in Section 8.8. [**221:**5.9.2.2]

8.3.2.9.2.3 Joint reinforcement shall be provided in the horizontal mortar joints immediately above and below sleeves in concrete masonry walls, and all hollow spaces of concrete masonry walls immediately adjacent to the sleeve shall be filled with concrete, mortar, or grout. [**221:**5.9.2.3]

8.3.2.9.3 The clear space between the openings for the penetrating items shall be not less than three times the largest dimension of the largest opening. [**221:**5.9.3]

8.3.2.9.4* The limitation on the height of penetrations above the floor and other requirements of 8.3.2.9 shall not apply where the structural framework of the building has a fire resistance rating equal to or greater than the required fire resistance rating of the HC fire wall; only compliance with Section 8.8 shall be required. [**221:**5.9.4]

--`,,```,,,,````-`-`,,`,,`,`,,`---

Copyright National Fire Protection Association
Provided by IHS under license with NFPA
No reproduction or networking permitted without license from IHS

Not for Resale

8.3.2.9.5 Piping conveying high hazard materials shall be in accordance with 8.3.2.11. [**221:**5.9.5]

8.3.2.10 Ducts and Air-Transfer Openings. [**221:**5.10]

8.3.2.10.1 Fire dampers shall be installed and maintained in accordance with NFPA 90A, *Standard for the Installation of Air-Conditioning and Ventilating Systems*. [**221:**5.10.1]

8.3.2.10.2 HC fire walls shall be protected with two fire damper assemblies. [**221:**5.10.2]

8.3.2.10.3 For double HC fire walls, each wall assembly shall be protected with a fire damper rated for that wall with a slip joint connecting the sleeves between the HC fire walls. [**221:**5.10.3]

8.3.2.10.4 For cantilevered and tied HC fire walls, a slip joint connecting the sleeves shall be provided on both sides of the two dampers (to separate the ductwork on each side from the section containing the dampers) for HC fire walls. [**221:**5.10.4]

8.3.2.10.5 Ductwork conveying high hazard materials shall be in accordance with 8.3.2.11. [**221:**5.10.5]

8.3.2.11* High Hazard Materials. [**221:**5.11]

8.3.2.11.1 Piping or ductwork that is used to convey high hazard materials shall not penetrate HC fire walls that have a required fire resistance rating of 4 hours or greater. [**221:**5.11.1]

8.3.2.11.2 Piping or ductwork that is used to convey high hazard materials and that penetrates fire walls with a required fire resistance rating of less than 4 hours shall be protected with approved devices or with systems designed to terminate the flow or movement of the materials through the fire wall automatically upon fire detection. [**221:**5.11.2]

8.3.2.12* Parapets. [**221:**5.12]

8.3.2.12.1 HC fire walls shall extend from the foundation to a point at least 30 in. (760 mm) above the top surface of the roof being protected. [**221:**5.12.1]

8.3.2.12.2 Roofs sloped greater than ¼ in. per foot (6 mm per 305 mm) downward toward the HC fire wall shall be provided with a minimum 36 in. (915 mm) parapet. [**221:**5.12.2]

8.3.2.12.3* HC fire walls shall be permitted to terminate at or above the top surface of the roof deck provided that the structural framework (columns, beams, and girders) one bay out on both sides of the HC fire wall have the same fire resistance rating as the HC fire wall. [**221:**5.12.3]

8.3.2.13* Roof Surface Protection. Roof surfaces adjacent to the HC fire wall for at least 25 ft (7620 mm) on each side shall be constructed and protected in accordance with 8.3.2.13.1 through 8.3.2.13.2.2. [**221:**5.13]

8.3.2.13.1 Locations Outside High Wind–Prone Regions. For buildings less than or equal to 60 ft (18 m) in height and located outside hurricane prone regions, as defined by ASCE 7, the roof surface adjacent to HC fire walls for at least 25 ft (7620 mm) on each side shall be protected in accordance with 8.3.2.13.1.1 or 8.3.2.13.1.2. [**221:**5.13.1]

8.3.2.13.1.1 For single-ply membranes, gravel ballast or concrete paver blocks shall provide complete membrane coverage and shall be installed in accordance with ANSI/SPRI RP-4, *Wind Design Standard for Ballasted Single-Ply Roofing Systems*. [**221:**5.13.1.1]

8.3.2.13.1.2 Built-up and modified bitumen roofs shall be surfaced with gravel or slag applied at a minimum rate of 4 lb/ft^2 (19 kg/m^2) and embedded in a flood coat of hot asphalt or coal-tar. [**221:**5.13.1.2]

8.3.2.13.2* Locations Within High Wind–Prone Regions. For buildings greater than 60 ft (18 m) in height or located within hurricane prone regions, as defined by ASCE/SEI 7, the roof surface on each side of the roof adjacent to HC fire walls for at least 25 ft (7620 mm) on each side shall be protected in accordance with 8.3.2.13.2.1 or 8.3.2.13.2.2. [**221:**5.13.2]

8.3.2.13.2.1 For single-ply membranes, concrete paver blocks shall provide complete membrane coverage and shall be installed in accordance with ANSI/SPRI RP-4. [**221:**5.13.2.1]

8.3.2.13.2.2 Built-up and modified bitumen roofs adjacent to HC fire walls shall be surfaced with gravel or slag embedded in a flood coat of hot asphalt or coal-tar and applied at a minimum rate of 4 lb/ft^2 (19 kg/m^2). [**221:**5.13.2.2]

(A) Gravel or slag shall be embedded into a double flood coat of hot asphalt or coal-tar to ensure full embedment. [**221:**5.13.2.2.1]

(B) After cooling, any loose gravel or slag shall be removed from the roof. [**221:**5.13.2.2.2]

(C) All graveled roofs greater than 60 ft (18 m) in height shall have a minimum parapet height of 24 in. (610 mm). [**221:**5.13.2.2.3]

8.3.2.14* Roof Structures. [**221:**5.14]

8.3.2.14.1 Roof structures with combustible construction or contents, such as monitors, penthouses, or cooling towers, not more than 20 ft (6100 mm) in height above the roof shall be located at least 50 ft (15 m) from HC fire walls required to have a fire resistance rating exceeding 2 hours. [**221:**5.14.1]

8.3.2.14.2 Roof structures with combustible construction or contents over 20 ft (6100 m) in height shall be provided with a separation distance not less than 2½ times the height of the roof structure from HC fire walls. [**221:**5.14.2]

8.3.2.15 Roof Penetrations. Heat and smoke vents, skylights, and unprotected roof penetrations for air-handling equipment or smoke control systems shall be located at least 25 ft (7620 mm) from HC fire walls requiring a fire resistance rating of more than 2 hours and at least 48 in. (1220 mm) from HC fire walls requiring a fire resistance rating of 2 hours or less. [**221:**5.15]

8.3.2.16 Horizontal Continuity. [**221:**5.16]

8.3.2.16.1 HC fire walls shall comply with the requirements of 8.3.2.16.2 through 8.3.2.16.3. [**221:**5.16.1]

8.3.2.16.2 End Walls. [**221:**5.16.2]

8.3.2.16.2.1* The length and arrangement of end walls shall be in accordance with Table 8.3.2.16.2.1 and Figure 8.3.2.16.2.1(a) or Figure 8.3.2.16.2.1(b). [**221:**5.16.2.1]

8.3.2.16.2.2 The fire resistance rating of the end walls shall be based on fire exposure from the outside and shall be a minimum of 1 hour, or 2 hours less than that of the HC fire wall, whichever is greater. [**221:**5.16.2.2]

8.3.2.16.2.3 For light hazard and ordinary hazard (Group 1 or Group 2) occupancies as defined in NFPA 13, *Standard for the Installation of Sprinkler Systems*, in lieu of providing end walls, the fire wall shall be permitted to extend to a distance of at

Copyright National Fire Protection Association
Provided by IHS under license with NFPA
No reproduction or networking permitted without license from IHS
Not for Resale

Table 8.3.2.16.2.1 Wall Protection

Height of Exposing Area		Length of End Wall Protection	
ft	m	ft	mm
≤40	≤12.2	6	1830
41–70	12.5–21	10	3050
≥71	≥21.6	14	4265

Note: Protection should consist of blank, fire-rated construction. [**221:** Table 5.16.2.1]

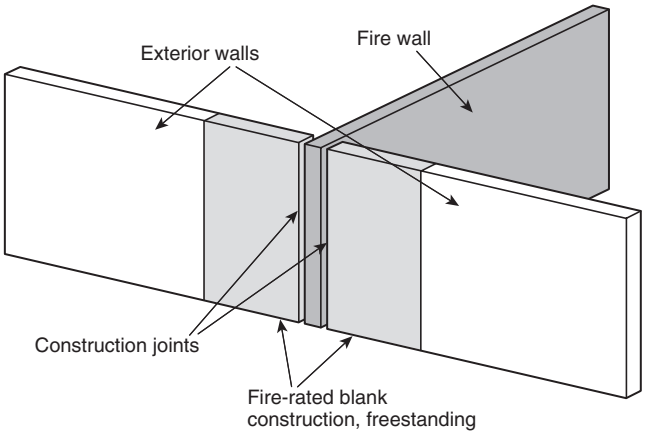

FIGURE 8.3.2.16.2.1(a) End Wall Exposure Protection — End Walls Tied to Structural Framing. [221: Figure 5.16.2.1(a)]

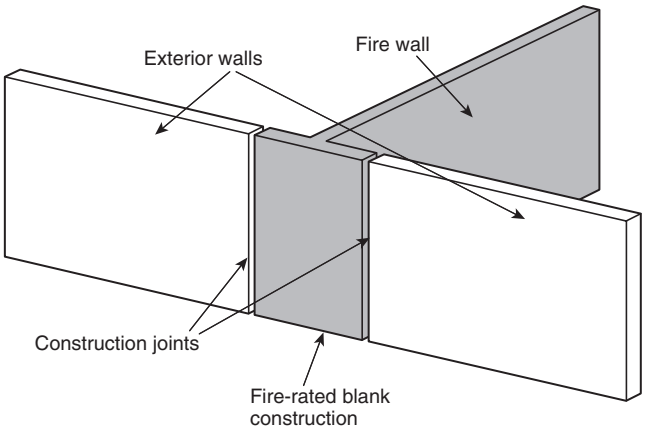

FIGURE 8.3.2.16.2.1(b) End Wall Exposure Protection — End Walls Not Tied to Structural Framing. [221: Figure 5.16.2.1(b)]

least 30 in. (760 mm) beyond the exterior face of the exterior walls, as shown in Figure 8.3.2.16.2.3. [**221:**5.16.2.3]

8.3.2.16.2.4 Openings for truck docks and railroad sidings shall not be located within 20 ft (6100 mm) on either side of an HC fire wall. [**221:**5.16.2.4]

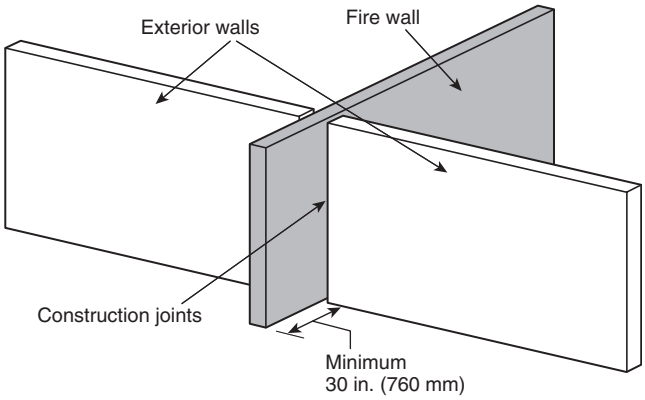

FIGURE 8.3.2.16.2.3 End Wall Exposure Protection for Light Hazard and Ordinary Hazard (Group 1 or Group 2) Occupancies. [221: Figure 5.16.2.3]

8.3.2.16.3 Angle Walls. [**221:**5.16.3]

8.3.2.16.3.1 The length of fire-resistive angle walls, *Y*, as shown in Figure 8.3.2.16.3.1, shall be 35 ft (10.7 m). [**221:**5.16.3.1]

8.3.2.16.3.2 The fire resistance rating of the angle walls shall be based on fire exposure from the outside and shall be 1 hour, or 1 hour less than that of the HC fire wall, whichever is greater. [**221:**5.16.3.2]

8.3.2.16.3.3 Construction of each wall and eave shall be noncombustible for an additional 65 ft (20 m) beyond the fire resistance–rated construction. [**221:**5.16.3.3]

8.3.2.16.3.4 Elevation differences perpendicular to HC fire walls shall be protected as angle walls, as shown in Figure 8.3.2.16.3.4. [**221:**5.16.3.4]

8.3.3 Fire Walls. Fire walls shall meet the requirements of 8.3.3.1 through 8.3.3.12.

8.3.3.1 Construction. Fire walls shall be of noncombustible or limited-combustible construction.

8.3.3.1.1 Where both buildings being separated are of Type V construction, fire walls of combustible construction shall be permitted.

8.3.3.1.2 The fire resistance rating of fire walls, regardless of the type of construction of the buildings being separated, shall be not less than the greater of one of the following:

(1) Fire resistance ratings required by Table 6.2.4.1(a) and Table 6.2.4.1(b), where separating buildings containing different occupancies
(2) Fire resistance ratings required by Table 34.3.2.3, where separating buildings containing high hazard contents required to comply with Protection Level 1, Protection Level 2, Protection Level 3, Protection Level 4, or Protection Level 5
(3) Three hours, where at least one of the buildings is an industrial occupancy with ordinary hazard contents, a bulk retail mercantile occupancy, or a storage occupancy with ordinary hazard contents
(4) Two hours

Copyright National Fire Protection Association
Provided by IHS under license with NFPA
No reproduction or networking permitted without license from IHS
Not for Resale

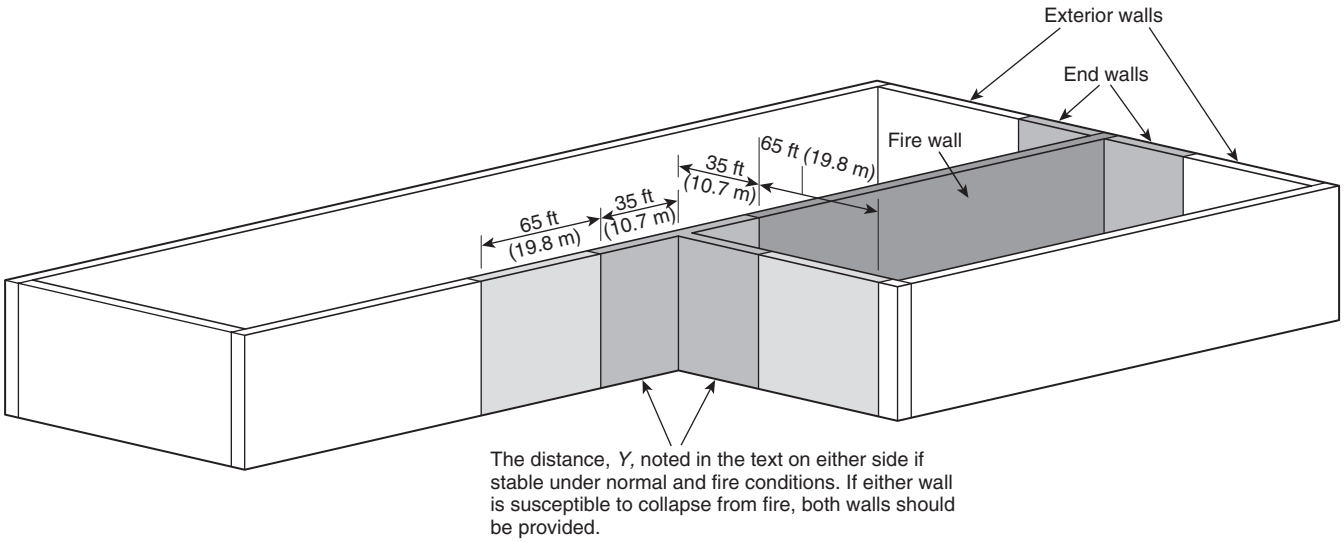

FIGURE 8.3.2.16.3.1 Angle Wall Exposure Protection. [221: Figure 5.16.3.1]

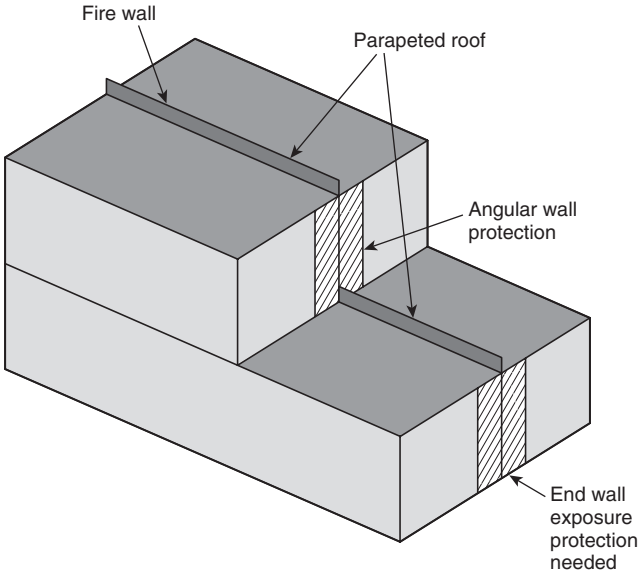

FIGURE 8.3.2.16.3.4 Exterior Wall Protection. [221: Figure 5.16.3.4]

8.3.3.2 Structural Stability. [221: 6.2]

8.3.3.2.1 Fire walls shall be designed and constructed to remain stable after collapse of the structure due to fire on either side of the wall. [**221:**6.2.1]

8.3.3.2.2 Fire walls constructed in compliance with the requirements of 8.3.3.3, 8.3.3.4, or 8.3.3.5 shall be deemed to provide the required stability. [**221:**6.2.2]

8.3.3.2.3* Design Loads. All walls and their supports shall be designed for loads in accordance with Chapter 35 of this *Code* and to withstand a minimum uniform load of 5 lbf/ft^2 (0.24 kPa) from either direction applied perpendicular to the face of the wall. [**221:**4.2]

8.3.3.2.4* Impact Damage. [**221:**4.6]

8.3.3.2.4.1 Where the wall is subject to impact damage from moving vehicles or the handling of merchandise or other activity, protection against impact damage shall be provided for an appropriate height but not less than 60 in. (1525 mm) from the finished floor. [**221:**4.6.1]

8.3.3.2.4.2 Where the fire-protective covering of a structural element required to have a fire resistance rating 8.3.3.4.3 by is subject to impact damage from moving vehicles, the handling of merchandise, or other activity, protection against impact damage shall be provided for an appropriate height but not less than 60 in. (1525 mm) from the finished floor. [**221:**4.6.2]

8.3.3.3* Cantilevered Fire Walls. Cantilevered fire walls shall be entirely self-supported and nonbearing. [**221:**6.3]

8.3.3.3.1 There shall be no connections to the building(s) or contents on either side other than to the flashing. [**221:**6.3.1]

8.3.3.3.2 Such walls shall be erected where there is a complete break in the structural framework. [**221**:6.3.2]

8.3.3.4* Tied Fire Walls. [**221:**6.4]

8.3.3.4.1 Placement. Tied fire walls shall be centered on a single column line or constructed between a double column line. [**221:**6.4.1]

8.3.3.4.2 Framework. [**221:**6.4.2]

8.3.3.4.2.1 Structural framing on either side of the wall shall line up horizontally and vertically and shall support the roof. [**221:**6.4.2.1]

8.3.3.4.2.2 The framework on each side of the fire wall shall be continuous or tied together through the wall. [**221:**6.4.2.2]

8.3.3.4.2.3 The framework on each side shall be designed so that it resists the maximum lateral pull that can be developed due to framework collapse in a fire on the opposite side. [**221:**6.4.2.3]

8.3.3.4.2.4 Tied fire walls shall be supported laterally by the building framework with flexible anchors. [**221:**6.4.2.4]

Copyright National Fire Protection Association
Provided by IHS under license with NFPA
No reproduction or networking permitted without license from IHS
Not for Resale

8.3.3.4.3 Fire Resistance Rating. [**221:**6.4.3]

8.3.3.4.3.1 Where centered on a single column line, structural framing (i.e., columns and beams or trusses) at the column line shall have a fire resistance rating of not less than the required fire resistance rating of the fire wall. [**221:**6.4.3.1]

8.3.3.4.3.2 Where the wall is installed between double column lines, framing along the first column line immediately on each side of the fire wall shall have a fire resistance rating of not less than the required fire resistance rating of the fire wall. [**221:**6.4.3.2]

8.3.3.5* Double Fire Walls. [**221:**6.5]

8.3.3.5.1 A double fire wall shall consist of two back-to-back walls. [**221:**6.5.1]

8.3.3.5.2 There shall be no connections, other than to the flashing, between the walls. [**221:**6.5.2]

8.3.3.5.3 Each fire wall shall be supported laterally by the building frame on its respective side and shall be independent of the fire wall and framing on the opposite side. [**221:**6.5.3]

8.3.3.5.4* Where either wall of a double wall is laterally supported by a building frame with a fire resistance rating less than that required for the wall, double wall assemblies shall be considered to have a combined assembly fire resistance rating as specified in Table 8.3.3.5.4. [**221:**4.5]

Table 8.3.3.5.4 Fire Resistance Ratings for Double-Wall Assemblies

Fire Resistance Rating of Each Wall (hr)	Rating Equivalent to Single Wall (hr)
3	4
2	3
1	2

[**221:** Table 4.5]

8.3.3.6 Fire Wall Termination. Fire walls shall extend from the foundation to a point at least 30 in. (760 mm) above the surface of the roof, except where installed in accordance with 8.3.3.6.1 through 8.3.3.6.5. [**221:**6.6]

8.3.3.6.1 Buildings Located Above Parking Garages. A building located above a parking garage shall be permitted to have the fire walls for the building located above the parking garage extend from the horizontal separation between the parking garage and the building, provided that all of the conditions in 7.4.3.6.5 are met. [**221:**6.6.1]

8.3.3.6.2 Two-Hour Fire Resistance–Rated Noncombustible or Limited-Combustible Roof Assemblies. Fire walls shall be permitted to terminate against the underside of noncombustible or limited-combustible roof sheathing, deck, or slab where the roof assembly and the entire length and span of supporting elements for the roof assembly has a fire resistance rating of not less than 2 hours. [**221:**6.6.2]

8.3.3.6.3 Two-Hour Fire Resistance–Rated Fire Walls. Fire walls shall be permitted to terminate at the underside of roof sheathing, deck, or slab, provided that all of the following criteria are met:

(1) The fire wall has a required fire resistance rating of not more than 2 hours.
(2) The roof assembly within 48 in. (1220 mm) of the fire wall has not less than a 1-hour fire resistance rating, and the entire length and span of supporting elements for the rated roof assembly has a fire resistance rating of not less than 1 hour.
(3) Openings in the roof are not located within 48 in. (1220 mm) of the fire wall.
(4) The roof is provided with not less than a Class B roof covering. [**221:**6.6.3]

8.3.3.6.4 Type I or Type II Construction. [**221:**6.6.4]

8.3.3.6.4.1 In buildings of Type I or Type II construction, fire walls shall be permitted to terminate at the underside of noncombustible roof sheathing, deck, or slab where the roof is provided with not less than a Class B roof covering. [**221:**6.6.4.1]

8.3.3.6.4.2 Openings in the roof of a building of Type I or Type II construction shall not be located within 48 in. (1220 mm) of the fire wall. [**221:**6.6.4.2]

8.3.3.6.5 Types III, Types IV, or Types V Construction. In buildings of Type III, Type IV, and Type V construction, fire walls shall be permitted to terminate at the underside of roof sheathing or deck in accordance with 8.3.3.6.5.1, 8.3.3.6.5.2, or 8.3.3.6.5.3. [**221:**6.6.5]

8.3.3.6.5.1 Fire walls shall be permitted to terminate at the underside of roof sheathing or deck provided that all of the following criteria are met:

(1) The roof assembly within 48 in. (1220 mm) of each side of the fire wall is of fire retardant–treated wood.
(2) The roof is provided with not less than a Class B roof covering.
(3) Openings in the roof are not located within 48 in. (1220 mm) of the fire wall.

[**221:**6.6.5.1]

8.3.3.6.5.2 Fire walls shall be permitted to terminate at the underside of the roof sheathing where the roof sheathing or deck is constructed of approved noncombustible or limited-combustible materials or of fire retardant–treated wood for a distance of 48 in. (1220 mm) on both sides of the wall. [**221:**6.6.5.2]

8.3.3.6.5.3 Fire walls shall be permitted to terminate at the roof sheathing or deck, provided that all of the following criteria are met:

(1) The underside of the roof sheathing or deck is protected with ⅝ in. (16 mm) Type X gypsum board applied directly beneath the underside of the roof sheathing or deck.
(2) The Type X gypsum board is supported by minimum 2 in. (51 mm) ledgers attached to the sides of the roof framing members.
(3) The Type X gypsum board is applied on both sides of the fire wall for a minimum distance of 48 in. (1220 mm) on both sides of the fire wall.
(4) Openings in the roof are not located within 48 in. (1220 mm) of the fire wall.
(5) The roof is covered with minimum Class C roof covering. [**221:**6.6.5.3]

8.3.3.7 Fire Walls with Elevation Differences. Where a fire wall separates parts of a building having different heights, the

Copyright National Fire Protection Association
Provided by IHS under license with NFPA
No reproduction or networking permitted without license from IHS
Not for Resale

fire wall shall be permitted to terminate in accordance with one of the following:

(1) At a point 36 in. (915 mm) above the lower roof level where the exterior wall for a height of 120 in. (3050 mm) above the lower roof is 1-hour fire resistance–rated construction with openings protected by assemblies having a fire protection rating of not less than ¾ hour
(2) At the sheathing of the lower roof where the exterior wall is without openings and where the roof is of at least 1-hour fire resistance–rated construction for a width of at least 120 in. (3050 mm), measured from the wall [**221:**6.7]

8.3.3.8 Clearance. [**221:**6.8]

8.3.3.8.1* Clearance to allow for expansion of unprotected structural framework shall be provided. [**221:**6.8.1]

8.3.3.8.2 This space shall be provided between cantilevered walls and structural framework on each side and between double walls. [**221:**6.8.2]

8.3.3.8.3 In buildings assigned to Seismic Design Category C, Seismic Design Category D, Seismic Design Category E, or Seismic Design Category F, as determined in accordance with ASCE/SEI 7, sufficient separation shall be provided between cantilevered fire walls and adjacent framing on each side and between double walls to allow independent movements of the elements without contact. [**221:**6.8.2]

8.3.3.9 Horizontal Continuity. [**221:**6.9]

8.3.3.9.1 Horizontal Termination of Fire Walls. [**221:**6.9.1]

8.3.3.9.1.1 Fire walls shall be continuous in one of the following situations:

(1) From exterior wall to exterior wall and extending at least 18 in. (455 mm) beyond the exterior surface of exterior walls
(2) From an exterior wall extending at least 18 in. (455 mm) beyond the exterior surface of exterior walls to a fire wall with the same fire resistance rating
(3) From fire wall to fire wall with the same fire resistance ratings

[**221:**6.9.1.1]

8.3.3.9.1.2 Fire walls shall be permitted to terminate at the interior face of exterior sheathing, siding, or other exterior finishes where the exterior sheathing, siding, or other exterior finishes are noncombustible or limited combustible and extend 48 in. (1220 mm) on both sides of the fire wall. [**221:**6.9.1.2]

8.3.3.9.2 Horizontal Projecting Elements. Fire walls shall extend to the outer edge of horizontal projecting elements such as balconies, roof overhangs, canopies, marquees, and architectural projections that are within 48 in. (1220 mm) of the fire wall, unless otherwise permitted by 8.3.3.9.2.1, 8.3.3.9.2.2, or 8.3.3.9.2.3. [**221:**6.9.2]

8.3.3.9.2.1 Fire walls shall not be required to extend to the outer edge of horizontal projecting elements without concealed spaces where both of the following conditions are met:

(1) The exterior wall behind and below the projecting element has not less than a 1-hour fire resistance rating for a distance not less than the depth of the projecting element on both sides of the fire wall.
(2) Openings within such exterior walls are protected by assemblies having a fire protection rating of not less than ¾ hour. [**221:**6.9.2.1]

8.3.3.9.2.2 Fire walls shall not be required to extend to the outer edge of noncombustible horizontal projecting elements with concealed spaces where all of the following conditions are met:

(1) A wall having a fire resistance rating of not less than 1 hour extends through the concealed space.
(2) The projecting element is separated from the building by construction having a fire resistance rating of not less than 1 hour for a distance on each side of the fire wall equal to the depth of the projecting element.
(3) Openings within such exterior walls are protected by assemblies having a fire protection rating of not less than ¾ hour.

[**221:**6.9.2.2]

8.3.3.9.2.3 Fire walls shall not be required to extend to the outer edge of combustible horizontal projecting elements with concealed spaces where all of the following conditions are met:

(1) The fire wall extends through the concealed space to the outer edges of the projecting elements.
(2) The exterior wall behind and below the projecting element has a fire resistance rating of not less than 1 hour for a distance not less than the depth of the projecting elements on both sides of the fire wall.
(3) Openings within such exterior walls are protected by assemblies having a fire protection rating of not less than ¾ hour.

[**221:**6.9.2.3]

8.3.3.10 Opening Protectives. Openings permitted in fire walls shall comply with 8.3.3.10.1 through 8.3.3.10.4 and Section 8.7. [**221:**6.10]

8.3.3.10.1 Maximum Openings. The total width of all openings in fire walls shall not exceed 25 percent of the length of the wall in each story. [**221:**6.10.1]

8.3.3.10.2 Single Opening Size. [**221:**6.10.2]

8.3.3.10.2.1 Single opening protectives in fire walls shall not exceed the maximum size tested. [**221:**6.10.2.1]

8.3.3.10.2.2 Single opening protectives in fire walls shall not be limited in size where the buildings on both sides of the fire wall are protected throughout by automatic sprinkler systems in accordance with NFPA 13 or NFPA 13R, *Standard for the Installation of Sprinkler Systems in Residential Occupancies up to and Including Four Stories in Height.* [**221:**6.10.2.2]

8.3.3.10.3* Double Fire Walls. Openings in double fire walls shall be protected using one fire door in each separate wall. [**221:**6.10.3]

8.3.3.10.4* Material Handling Systems. Where material handling systems penetrate a fire wall, the system design shall provide a method to stop the material handling system and allow fire doors to close without obstruction. [**221:**6.10.4]

8.3.3.11 Penetrations. Penetrations in fire walls, including fire dampers for ducts and air-transfer openings, shall comply with Section 8.8.

Copyright National Fire Protection Association
Provided by IHS under license with NFPA
No reproduction or networking permitted without license from IHS
Not for Resale

8.3.3.12 Joints. Joints in fire walls shall comply with Section 8.9.

8.4 Fire Barrier Walls.

8.4.1 Scope. Fire barrier walls shall meet the requirements of Section 8.4.

8.4.2* Design Loads. All walls and their supports shall be designed for loads in accordance with Chapter 35 of this *Code* and to withstand a minimum uniform load of 5 lbf/ft^2 (0.24 kPa) from either direction applied perpendicular to the face of the wall. [**221:**4.2]

8.4.3* Impact Damage. [**221:**4.6]

8.4.3.1 Where the wall is subject to impact damage from moving vehicles or the handling of merchandise or other activity, protection against impact damage shall be provided for an appropriate height but not less than 60 in. (1525 mm) from the finished floor. [**221:**4.6.1]

8.4.3.2 Where the fire-protective covering of a structural element required to have a fire resistance rating is subject to impact damage from moving vehicles, the handling of merchandise, or other activity, protection against impact damage shall be provided for an appropriate height but not less than 60 in. (1525 mm) from the finished floor. [**221:**4.6.2]

8.4.4 Continuity. [**221:**7.2]

8.4.4.1 Fire barrier walls shall be continuous from one of the following or a combination thereof:

(1) An exterior wall to an exterior wall
(2) A floor below to a floor or roof above
(3) One fire barrier wall to another fire barrier wall, fire wall, or HC fire wall having a fire resistance rating of not less than that required for the fire barrier wall

[**221:**7.2.1]

8.4.4.2 Fire barrier walls shall be continuous through all concealed spaces, such as those found above a ceiling, including interstitial spaces. [**221:**7.2.2]

8.4.4.3 A fire barrier wall required for an occupied space below an interstitial space shall not be required to extend through the interstitial space, provided that the construction assembly forming the bottom of the interstitial space has a fire resistance rating not less than that of the fire barrier wall. [**221:**7.2.3]

8.4.4.4* The fire barrier wall shall be permitted to terminate at an individually protected structural member in the same plane provided that the structural member has a fire resistance rating of not less than that required for the fire barrier wall. [**221:**7.2.4]

8.4.4.5 Structural elements supporting fire barrier walls shall have a fire resistance rating of not less than required for the wall except as modified by 7.2.7.2.2. [**221:**7.2.5]

8.4.5 Opening Protectives. [**221:**7.3]

8.4.5.1 Openings permitted in fire barrier walls shall comply with the requirements of 8.4.5 and Section 8.7. [**221:**7.3.1]

8.4.5.2 The total glazing area in fire door assemblies and fire window assemblies shall not exceed 25 percent of the wall common to any room. [**221:**7.3.2]

8.4.6 Penetrations.

8.4.6.1 Penetrations in fire walls shall comply with Section 8.8.

8.4.6.2 Fire dampers for ducts or air-transfer openings used as opening protectives shall comply with 8.8.8.

8.4.7 Joints. Joints in fire walls shall comply with Section 8.9.

8.5 Exterior Walls — General. Exterior walls shall be designed and constructed in accordance with Chapters 7 and 37.

8.6 Horizontal Assemblies.

8.6.1 Floor-Ceiling and Roof-Ceiling Assemblies.

8.6.1.1 Construction assemblies required to be fire resistance–rated floors or roofs, or a combination of floors or roofs and ceilings, shall be fire barriers having a fire resistance rating set forth in Table 7.2.1.1 or as otherwise required by this *Code*.

8.6.1.2 Where a ceiling forms a protective membrane for fire resistance–rated floor-ceiling or roof-ceiling assemblies, the construction and supporting horizontal structural members shall not be required to be individually fire protected, unless required by 8.2.2.3.2.

8.6.1.3 Ceilings shall form continuous fire-resistive membranes but shall be permitted to have steel, ferrous, or copper conduits; electrical outlet boxes; pipes; tubes; combustion vents; exhaust vents; concrete; or masonry penetrating items where the annular space is protected to prevent the free passage of flame and the products of combustion where the aggregate area of ceiling penetrations is not more than 100 in.^{2} (64,520 mm^2) for any 100 ft^2 (9.3 m^2) of ceiling.

8.6.1.4 Where 1-hour fire resistance–rated construction is required for floor or floor-ceiling assemblies, the fire-resistive protection shall be permitted to be omitted from the underside of the floor in the crawl space area at grade and from the attic area of the ceiling where the roof forms the upper surface of the attic.

8.6.1.5 Duct systems that penetrate the ceiling membrane of a fire resistance–rated floor-ceiling or roof-ceiling assembly shall be protected with any of the following:

(1) Fire resistance–rated shaft enclosure
(2) Ceiling radiation damper installed at the ceiling line where the duct system penetrates the ceiling of a fire resistance–rated floor-ceiling or roof-ceiling assembly in accordance with 8.8.8.6
(3) Ceiling radiation damper installed at the ceiling line in accordance with 8.8.8.6 where a diffuser with no duct attached penetrates the ceiling of a fire resistance–rated floor-ceiling or roof-ceiling assembly

8.6.2 Openings.

8.6.2.1 Openings in floors shall comply with the requirements of Section 8.12.

8.6.2.2 Floor fire door assemblies used as opening protectives shall be installed in accordance with 8.7.7.

8.6.2.3 Fire dampers for ducts and air-transfer openings used as opening protectives shall comply with the requirements of 8.8.8.

--`,,```,,,,````-`-`,,`,,`,`,,`---

Copyright National Fire Protection Association
Provided by IHS under license with NFPA
No reproduction or networking permitted without license from IHS

Not for Resale

8.6.3 Penetrations. Penetrations in floor-ceiling and roof-ceiling assemblies shall comply with the requirements of Section 8.8.

8.6.4 Joints. Joints in floor-ceiling and roof-ceiling assemblies shall comply with the requirements of Section 8.9.

8.6.5 Continuity. All floor-ceiling and roof-ceiling assemblies shall be continuous without openings or penetrations, except as provided by this chapter.

8.7 Opening Protectives.

8.7.1 Fire Doors and Fire Windows. Where required doors and windows serve as opening protectives, they shall comply with the requirements of NFPA 80, *Standard for Fire Doors and Fire Windows*.

8.7.2 Minimum Fire Protection Rating. Opening protectives shall have a minimum fire protection rating as specified in Table 8.7.2.

Table 8.7.2 Minimum Fire Protection Ratings for Opening Protectives in Fire Resistance–Rated Assemblies

Component	Fire Resistance Rating	Fire Protection Rating	
	Walls and Partitions (hr)	Fire Door Assemblies (hr)	Fire Window Assemblies (hr)
Elevator hoistways	2	1½	NP
	1	1	NP
Vertical shafts (including stairways, exit, and refuse chutes)	2	1½	NP
	1	1	NP
HC Fire walls and fire walls	4	See 8.3.2.8 and 8.3.3.10.	NP
	3	3	NP
	2	1½	NP
Fire barrier	4	3	NP
	3	3	NP
	2	1½	NP
	1	¾	¾
Horizontal exit	2	1½	NP
Corridors, exit access*	1	⅓	¾
	½	⅓	⅓
Smoke barrier*†	1	⅓	¾
Smoke partition*†	½	⅓	⅓

NP: Not permitted.

*For residential board and care, see 26.2.3.1.1.

†Fire doors not required to have a hose stream test per NFPA 252, *Standard Methods of Fire Tests of Door Assemblies*.

8.7.3* Fire Door Closers.

8.7.3.1 Unless otherwise specified, fire doors shall be self-closing or automatic-closing.

8.7.3.2 Fire doors used to protect the means of egress shall be self-closing or automatic-closing in accordance with 11.2.1.8.1.

8.7.4 Initiating Devices. Detection devices activating the closer shall conform to *NFPA 72, National Fire Alarm Code*.

8.7.5 Fire Door Assemblies and Fire Window Assemblies.

8.7.5.1 Openings required to have a fire protection rating by Table 8.7.2 shall be protected by approved, listed, and labeled fire door assemblies and fire window assemblies and their accompanying hardware, including all frames, closing devices, anchorage and sills in accordance with the requirements of NFPA 80, except as otherwise specified in this *Code*.

8.7.5.2* Fire protection ratings for products intended to comply with 8.7.5 shall be as determined and reported by a nationally recognized testing agency in accordance with NFPA 252 or NFPA 257, *Standard on Fire Test for Window and Glass Block Assemblies*.

8.7.5.2.1 NFPA 257 shall evaluate fire protection–rated glazing under positive pressure.

8.7.5.2.2 NFPA 252 or UL 10C, *Positive Pressure Fire Tests of Door Assemblies*, shall evaluate side-hinged or pivoted-swinging doors under positive pressure.

8.7.5.2.3 NFPA 252 shall evaluate doors, other than side-hinged or pivoted-swinging doors, with the neutral pressure plane no higher than the top of the door.

8.7.5.2.4 All fire door assemblies and fire window assemblies shall bear an approved label.

8.7.6 Fire Door Assemblies.

8.7.6.1 Opening protectives in fire walls and fire barrier walls shall have a fire protection rating in accordance with Table 8.7.2.

8.7.6.2 Fire door assemblies and fire window assemblies shall be installed in accordance with NFPA 80.

8.7.6.3 The maximum size of fire doors shall not exceed that specified in NFPA 80, except as modified by Chapter 11.

8.7.7 Floor Fire Door Assemblies.

8.7.7.1 Floor fire door assemblies used to protect openings in fire resistance–rated floors shall be tested in the horizontal position in accordance with NFPA 288, *Standard Methods of Fire Tests of Floor Fire Door Assemblies Installed Horizontally in Fire Resistance–Rated Floor Systems*, and shall achieve a fire resistance rating not less than the assembly being penetrated.

8.7.7.2 Floor fire door assemblies shall be approved, listed, and labeled.

8.7.8 Use of Wired Glass.

8.7.8.1 Wired glass that is ¼ in. (6.3 mm) thick and labeled for fire protection purposes shall be permitted to be used in approved opening protectives, with the maximum sizes in accordance with their listing.

8.7.8.2 Other glazing materials that have been tested and labeled to indicate the type of opening to be protected for fire protection purposes shall be permitted to be used in approved

Copyright National Fire Protection Association
Provided by IHS under license with NFPA
No reproduction or networking permitted without license from IHS
Not for Resale

opening protectives in accordance with their listing and with the maximum sizes tested.

8.7.9* Fire Window Assemblies. Fire window assemblies shall be permitted in fire barriers having a required fire resistance rating of 1 hour or less and shall be of an approved type with the appropriate fire protection rating for the location in which they are installed.

8.7.10 Windows in Exterior Walls.

8.7.10.1 Three-quarter-hour fire protection–rated windows in exterior walls shall be permitted to have an area not over 84 ft^2 (7.8 m^2), with neither the width nor the height exceeding 12 ft (3.6 m).

8.7.10.2 Fire windows shall be either fixed or automatic-closing.

8.7.11 Nonsymmetrical Glazing Systems. Nonsymmetrical fire protection–rated glazing systems shall be tested with each face exposed to the furnace, and the assigned fire protection rating shall be the shortest duration obtained from the two tests conducted in compliance with NFPA 257.

8.7.12 Sidelights and Transoms. Glazing used in sidelights and transoms adjacent to 20-minute doors in 1-hour corridor fire barriers shall be tested in accordance with 8.7.5 and shall attain a minimum 45-minute fire protection rating, including hose stream.

8.7.13 Identification of Fire Protection–Rated Glazing. Fire protection–rated glazing shall bear identification as described in 8.7.13.1 or 8.7.13.2 and shall be permanently affixed.

8.7.13.1 Fire protection–rated glazing used in doors shall bear the following four-part identification, "D — H or NH — T or NT — XXX," as follows:

(1) D indicates that the glazing is to be used in fire door assemblies and that the glazing meets the fire resistance requirements of the test standard.
(2) H indicates that the glazing meets the hose stream requirements of the test standard.
(3) NH indicates that the glazing does not meet the hose stream requirements of the test.
(4) T indicates that the glazing has a maximum transmitted temperature endpoint of not more than 450°F (250°C) above ambient at the end of 30 minutes of standard fire test exposure.
(5) NT indicates that the glazing does not have a temperature rise rating.
(6) XXX specifies the fire protection rating period, in minutes.

8.7.13.2 Fire protection–rated glazing used in fire resistance–rated walls and partitions shall bear the following two-part identification, "OH-XXX," as follows:

(1) OH indicates that the glazing meets both the fire resistance and the hose stream requirements of NFPA 257 and is permitted to be used in openings.
(2) XXX indicates the fire protection rating period, in minutes, that was tested.

8.8 Penetrations.

8.8.1 General. The provisions of Section 8.8 shall govern the materials and methods of construction used to protect through-penetrations and membrane penetrations in fire walls, fire barrier walls, and fire resistance–rated horizontal assemblies.

8.8.2 Firestop Systems and Devices Required. Penetrations for cables, cable trays, conduits, pipes, tubes, combustion vents and exhaust vents, wires, and similar items to accommodate electrical, mechanical, plumbing, and communications systems that pass through a wall, floor, or floor-ceiling assembly constructed as a fire barrier shall be protected by a firestop system or device.

8.8.2.1 Testing. The firestop system or device shall be tested in accordance with ASTM E 814, *Standard Test Method for Fire Tests of Through-Penetration Fire Stops*, or UL 1479, *Standard for Safety for Fire Tests of Through-Penetration Fire Stops*, under a minimum positive pressure differential of 0.01 in. water column (2.5 Pa) between the exposed and the unexposed surface of the test assembly.

8.8.2.2 Alternative Requirements.

8.8.2.2.1 The requirements of 8.8.2 shall not apply where otherwise permitted by any one of the following:

(1) *Where penetrations are tested and installed as part of an assembly in accordance with the NFPA 251 rated assembly
(2) Where penetrations through floors are enclosed in a shaft enclosure designed as a fire barrier
(3) Where concrete, grout, or mortar has been used to fill the annular spaces around cast-iron, copper, or steel piping, or steel conduit or tubing, that penetrates one or more concrete or masonry fire resistance–rated assemblies. The nominal diameter of each penetrating item shall not exceed 6 in. (150 mm), the opening size shall not exceed 144 in.^{2} (92,909 mm^2), and the thickness of the concrete, grout, or mortar shall be the full thickness of the assembly.
(4) Where firestopping materials are used with the following penetrating items, the penetration is limited to one floor, and the firestopping material is capable of preventing the passage of flame and hot gases sufficient to ignite cotton waste when subjected to the time–temperature fire conditions of NFPA 251 under a minimum positive pressure differential of 0.01 in. water column (2.5 Pa) at the location of the penetration for the time period equivalent to the required fire resistance rating of the assembly penetrated:
    (a) Steel, ferrous, or copper cables
    (b) Cable or wire with steel jackets
    (c) Cast-iron, steel, or copper pipes
    (d) Steel conduit or tubing

8.8.2.2.2 The maximum nominal diameter of the penetrating item, as indicated in 8.8.2.2.1(4)(a) through 8.8.2.2.1(4)(d), shall not be greater than 4 in. (100 mm) and shall not exceed an aggregate 100 in.^{2} (64,520 mm^2) opening in any 100 ft^2 (9.3 m^2) of floor or wall area.

8.8.2.3 F Ratings. Firestop systems and devices shall have an F rating of at least 1 hour, but not less than the required fire resistance rating of the fire barrier penetrated.

8.8.2.4 T Ratings. Penetrations in fire resistance–rated horizontal assemblies shall be required to have a T rating of at least 1 hour, but not less than the fire resistance rating of the horizontal assembly, and shall not be required for the following:

(1) A T rating is not required for floor penetrations contained within the cavity of a wall assembly.

Copyright National Fire Protection Association
Provided by IHS under license with NFPA
No reproduction or networking permitted without license from IHS
Not for Resale

(2) A T rating is not required for penetrations through floors or floor assemblies where the penetration is not in direct contact with combustible material.

8.8.3 Use of Sleeves for Penetration. Where the penetrating item uses a sleeve to penetrate the wall or floor, the sleeve shall be securely set in the wall or floor, and the space between the item and the sleeve shall be filled with a material that complies with 8.8.2.

8.8.4 Insulation Coverings. Insulation and coverings for penetrating items shall not pass through the wall or floor unless the insulation or covering has been tested as part of the firestop system or device.

8.8.5 Vibration Isolation. Where designs take transmission of vibrations into consideration, any vibration isolation shall meet one of the following conditions:

(1) It shall be made on either side of the wall or floor.
(2) It shall be designed for the specific purpose.

8.8.6 Transitions.

8.8.6.1 Where piping penetrates a fire resistance–rated wall or floor assembly, combustible piping shall not connect to noncombustible piping within 36 in. (915 mm) of the firestop system or device, unless it can be demonstrated that the transition will not reduce the fire resistance rating.

8.8.6.2 Unshielded couplings shall not be used to connect noncombustible piping to combustible piping, unless it can be demonstrated that the transition complies with the fire-resistive protection requirements of 8.8.2.

8.8.7 Membrane Penetrations. Membrane penetrations for cables, cable trays, conduits, pipes, tubes, combustion vents, exhaust vents, wires, and similar items to accommodate electrical, mechanical, plumbing, and communications systems that pass through a membrane of a wall, floor, or floor-ceiling assembly constructed as a fire barrier shall be protected by a firestop system or device, and shall comply with 8.8.2 through 8.8.6.2.

8.8.7.1 The firestop system or device shall be tested in accordance with ASTM E 814 or UL 1479 under a minimum positive pressure differential of 0.01 in. water column (2.5 Pa) between the exposed and the unexposed surface of the test assembly, unless one of the following criteria is met:

(1) Membrane penetrations of ceilings where the ceiling is not an integral part of a fire resistance–rated floor-ceiling or roof-ceiling assembly
(2) Membrane penetrations of steel, ferrous, or copper conduit, piping or tubing, and steel electrical outlet boxes and wires, or combustion vents or exhaust vents where the annular space is protected with an approved material and the aggregate area of the openings does not exceed 100 in.^{2} (64,520 mm^2) in any 100 ft^2 (9.3 m^2) of ceiling area
(3) Membrane penetrations for electrical outlet boxes and fittings, provided that such devices are listed for use in fire resistance–rated assemblies and are installed in accordance with their listing
(4) The annular space created by the membrane penetration of a fire sprinkler, provided that the space is covered by a metal escutcheon plate

8.8.7.2 Where walls or partitions are required to have a fire resistance rating of not less than 1 hour, recessed fixtures shall be installed in the wall or partition in such a manner that the required fire resistance is not reduced, unless one of the following criteria is met:

(1) Any steel electrical box not exceeding 16 in.^{2} (10,300 mm^2) in area shall be permitted where the aggregate area of the openings provided for the boxes does not exceed 100 in.^{2} (64,520 mm^2) in any 100 ft^2 (9.3 m^2) of wall area, and where outlet boxes are installed on opposite sides of the wall, the boxes shall be separated by one of the following means:
   (a) By a horizontal distance of not less than 24 in. (610 mm)
   (b) By a horizontal distance of not less than the depth of the wall cavity where the wall cavity is filled with cellulose loose-fill, rock wool, or slag wool insulation
   (c) By solid fireblocking in accordance with 8.14.2
   (d) By other listed materials and methods
(2) Membrane penetrations for any listed electrical outlet box made of any material shall be permitted, provided that such boxes have been tested for use in fire resistance–rated assemblies and are installed in accordance with the instructions included in the listing.
(3) The annular space created by the membrane penetration of a fire sprinkler shall be permitted, provided that the space is covered by a metal escutcheon plate.

8.8.8 Ducts and Air-Transfer Openings.

8.8.8.1 General. The provisions of 8.8.8 shall govern the materials and methods of construction used to protect ducts and air-transfer openings in fire walls, fire resistance–rated horizontal assemblies, and fire barrier walls.

8.8.8.2* Fire Damper Requirements. Fire dampers shall be installed to protect ducts and air-transfer openings that penetrate fire barriers and fire walls as required by other sections of this *Code*.

8.8.8.2.1 Fire dampers shall be designed and tested in accordance with the requirements of UL 555, *Standard for Fire Dampers,* and shall have the minimum fire protection rating specified in Table 8.8.8.2.1 for the rating of the assembly penetrated.

Table 8.8.8.2.1 Fire Damper Rating

Fire Resistance Rating of Assembly	Minimum Damper Rating (hr)
3-hr or greater fire resistance–rated assemblies	3
Less than 3-hr fire resistance–rated assemblies	1½
Ceiling of floor-ceiling or roof-ceiling assemblies	See 8.8.8.6.

8.8.8.2.2 In systems where fans continue to operate in the emergency mode, dynamic fire dampers shall be required.

8.8.8.2.3 Fire dampers shall be required in the following locations:

(1) Ducts and air-transfer openings penetrating walls or partitions having a fire resistance rating of 2 or more hours

Copyright National Fire Protection Association
Provided by IHS under license with NFPA
No reproduction or networking permitted without license from IHS
Not for Resale

(2) Ducts and air-transfer openings penetrating shaft walls having a fire resistance rating of 1 or more hours
(3) Ducts and air-transfer openings penetrating floors that are required to have protected openings where the duct also is not protected by a shaft enclosure
(4) Air-transfer openings that occur in walls or partitions that are required to have a fire-resistive rating of 30 minutes or more

8.8.8.2.4 Fire dampers shall not be required in the following locations:

(1) In floors that do not require protected floor openings
(2) In a duct system serving only one floor and used only for exhaust of air to the outside and not penetrating a wall or partition having a required fire resistance rating of 2 hours or more or passing entirely through the system and contained within its own dedicated shaft
(3) Where branch ducts connect to enclosed exhaust risers in which the airflow is upward, and steel subducts at least 22 in. (560 mm) in length are carried up inside the riser at each inlet

8.8.8.3 Installation.

8.8.8.3.1 Air-conditioning, heating, and ventilating ductwork and related equipment, including fire dampers, smoke dampers, combination fire and smoke dampers, and ceiling radiation dampers, shall be installed in accordance with NFPA 90A or NFPA 90B, *Standard for the Installation of Warm Air Heating and Air-Conditioning Systems*, as specified in Chapter 50, where applicable.

8.8.8.3.2 The equipment specified in 8.8.8.3.1 shall be installed in accordance with the requirements of 8.8.8, the manufacturer's installation instructions, its listing, and the mechanical code as specified in Chapter 50.

8.8.8.4 Access and Identification. Fire and smoke dampers shall be provided with an approved means of access, as follows:

(1) The means of access shall be large enough to allow inspection and maintenance of the damper and its operating parts.
(2) The access shall not affect the integrity of fire resistance–rated assemblies.
(3) The access openings shall not reduce the fire resistance rating of the assembly.
(4) Access points shall be permanently identified.
(5) Access doors in ducts shall be identified with a label having letters not less than ½ in. (13 mm) in height.
(6) The label shall read as follows in 8.8.8.4(6)(a), (b), (c), or (d):
    (a) FIRE/SMOKE DAMPER
    (b) SMOKE DAMPER
    (c) FIRE DAMPER
    (d) In an approved manner
(7) Access doors in ducts shall be tight-fitting and suitable for the required duct construction.
(8) Access and maintenance shall comply with the requirements of the mechanical code as specified in Chapter 50.

8.8.8.5* Fire Damper Actuation Device. The operating temperature of the heat-actuating device shall be approximately 50°F (27.8°C) above the normal temperature within the duct system, but not less than 160°F (71°C); or it shall be not more than 286°F (141°C) where located in a required smoke control system; or, where a combination fire and smoke damper is installed, it shall not exceed 350°F (177°C) where located in a smoke control system.

8.8.8.6 Ceiling Radiation Damper Requirements.

8.8.8.6.1 Ceiling radiation dampers or other methods of protecting openings in fire resistance–rated floor-ceiling or roof-ceiling assemblies shall comply with the construction details of the tested floor-ceiling or roof-ceiling assembly or with listed ceiling air diffusers or listed ceiling radiation dampers.

8.8.8.6.2 Ceiling dampers shall be tested in accordance with UL 555C, *Standard for Ceiling Dampers*.

8.8.8.6.3 Ceiling radiation dampers shall not be required where either of the following apply:

(1) ASTM E 119 fire tests have shown that ceiling radiation dampers are not necessary in order to maintain the fire resistance rating of the assembly.
(2) Exhaust duct penetrations are protected in accordance with 8.8.7, and the exhaust ducts are located within the cavity of a wall and do not pass through another dwelling unit or tenant space.

8.9* Joints.

8.9.1 General. The provisions of Section 8.9 shall govern the materials and methods of construction used to protect joints within or between fire walls, fire barrier walls, floors, and floor-ceiling and roof-ceiling assemblies in accordance with 8.9.2, and at the intersection of the exterior wall and the perimeter of the floor assembly in accordance with 8.9.3.

8.9.2 Joint System Required.

8.9.2.1 Joints made within or between fire resistance–rated assemblies shall be protected with a joint system that is designed and tested to prevent the spread of fire for a time period equal to that of the assembly in which the joint is located.

8.9.2.2 The materials, systems, or devices specified in 8.9.2.1 shall be tested as part of the assembly in accordance with the requirements of ASTM E 1966, *Standard Test Method for Fire-Resistive Joint Systems*, or ANSI/UL 2079, *Standard for Tests for Fire Resistance of Building Joint Systems*.

8.9.2.2.1 Testing of the joint system shall be representative of the actual installation.

8.9.2.2.2 All joint systems shall be tested at their maximum joint width in accordance with the requirements of ASTM E 1966 or ANSI/UL 2079 under a minimum positive pressure differential of 0.01 in. water column (2.5 Pa) for a time period equal to that of the assembly.

8.9.2.2.3 All test specimens shall comply with the minimum height or length required by the standard.

8.9.2.2.4 Wall assemblies shall be subjected to a hose stream test in accordance with NFPA 251.

8.9.3 Exterior Curtain Walls and the Perimeter Joint.

8.9.3.1* The provisions of 8.9.3 shall be intended to restrict the interior vertical passage of flame and hot gases from one floor to another at the location where the floor intersects the inside of an exterior curtain wall assembly.

8.9.3.2 Floor assemblies that are required to be a fire barrier shall extend to, and be tight against, the exterior curtain wall.

8.9.3.3 Where fire resistance–rated floor or floor-ceiling assemblies are required, voids created at the intersection of the

--`,,```,,,,````-`-`,,`,,`,`,,`---

Copyright National Fire Protection Association
Provided by IHS under license with NFPA
No reproduction or networking permitted without license from IHS
Not for Resale

exterior curtain wall assemblies and such floor or floor-ceiling assemblies shall be sealed with approved materials.

8.9.3.3.1 The approved materials specified in 8.9.3.3 shall be securely installed in accordance with the approved system.

8.9.3.3.2 The approved materials specified in 8.9.3.3 shall be capable of preventing the passage of flame and hot gases sufficient to ignite cotton waste where subjected to the time–temperature fire conditions of NFPA 251 under a minimum positive pressure differential of 0.01 in. water column (2.5 Pa) for a time period at least equal to the fire resistance rating of the floor assembly.

8.9.3.3.3 Where the fire resistance rating of the floor assembly is less than the time period determined in accordance with 8.9.3.3.2, the time period shall be permitted to be not less than the fire resistance rating of the floor assembly.

8.9.3.4 Height and fire resistance requirements for curtain wall spandrels shall comply with 37.1.4.

8.10 Smoke Partitions.

8.10.1* General. Where required elsewhere in this *Code*, smoke partitions shall be provided to limit the transfer of smoke.

8.10.2 Requirements. Smoke partitions shall comply with one of the following:

(1) Smoke partitions shall extend from the floor to the underside of the floor or roof deck above, through any concealed spaces, such as those above suspended ceilings, and through interstitial structural and mechanical spaces.
(2)*Smoke partitions shall be permitted to terminate at the underside of a monolithic or suspended ceiling system where the following conditions are met:
  (a) The ceiling system forms a continuous membrane.
  (b) A smoke-tight joint is provided between the top of the smoke partition and the bottom of the suspended ceiling.
  (c) The space above the ceiling is not used as a plenum.
(3) Smoke partitions serving hazardous areas shall be permitted to terminate at the underside of a monolithic or suspended ceiling system where the following conditions are met:
  (a) The ceiling system forms a continuous membrane.
  (b) A smoke-tight joint is provided between the tip of the smoke partition and the bottom of the suspended ceiling.
  (c) The space above the ceiling is not used as a plenum, or, if it is, there is no return grille from the hazardous area into the plenums.

8.10.3 Opening Protectives.

8.10.3.1 Doors in smoke partitions shall comply with 8.10.3.2 through 8.10.3.5.

8.10.3.2 Doors shall comply with the provisions of 11.2.1.

8.10.3.3 Doors shall not include louvers.

8.10.3.4* Door clearances shall be in accordance with NFPA 80.

8.10.3.5 Doors shall be self-closing or automatic-closing in accordance with 11.2.1.8.

8.10.3.6 Where a fire protection rating is specified for a smoke partition elsewhere in this *Code*, openings shall be protected as follows:

(1) Door opening protectives shall have a fire protection rating of not less than 20 minutes where tested in accordance with NFPA 252 without hose stream test, unless otherwise specified by Chapters 15 through 33.
(2) Fire windows shall comply with Section 8.7.
(3) Glazing used in sidelights and transoms adjacent to 20-minute doors in ½-hour fire resistance–rated smoke partitions shall be tested in accordance with 8.7.5 and shall attain a minimum 20-minute fire protection rating, including hose stream.

8.10.4 Penetrations.

8.10.4.1 The provisions of 8.10.4 shall govern the materials and methods of construction used to protect through-penetrations and membrane penetrations of smoke partitions.

8.10.4.2 Penetrations for cables, cable trays, conduits, pipes, tubes, vents, wires, and similar items to accommodate electrical, mechanical, plumbing, and communications systems that pass through a smoke partition shall be protected by a system or material that is capable of limiting the transfer of smoke.

8.10.4.3 Where designs take transmissions of vibration into consideration, any vibration isolation shall meet one of the following conditions:

(1) It shall be made on either side of the smoke partitions.
(2) It shall be designed for the specific purpose.

8.10.5 Air-Transfer Openings.

8.10.5.1 General. The provisions of 8.10.5 shall govern the materials and methods of construction used to protect air-transfer openings in smoke partitions.

8.10.5.2 Openings in Smoke Partitions. Air-transfer openings in smoke partitions shall be provided with approved smoke dampers designed and tested in accordance with the requirements of UL 555S, *Standard for Smoke Dampers,* to limit the transfer of smoke.

8.10.5.3 Installation.

8.10.5.3.1 Air-conditioning, heating, and ventilating ductwork and related equipment, including fire dampers, smoke dampers, combination fire and smoke dampers, and ceiling radiation dampers, shall be installed in accordance with NFPA 90A or NFPA 90B as specified in Chapter 50, where applicable.

8.10.5.3.2 The equipment specified in 8.10.5.3.1 shall be installed in accordance with the requirements of 8.10.5, the manufacturer's installation instructions, its listing, and the mechanical code as specified in Chapter 50.

8.10.5.4 Access and Identification. Fire and smoke dampers shall be provided with an approved means of access, as follows:

(1) The means of access shall be large enough to allow inspection and maintenance of the damper and its operating parts.
(2) The access shall not affect the integrity of fire resistance–rated assemblies.
(3) The access openings shall not reduce the fire resistance rating of the assembly.
(4) Access points shall be permanently identified.

--`,,```,,,,````-`-`,,`,,`,`,,`---
Copyright National Fire Protection Association
Provided by IHS under license with NFPA
No reproduction or networking permitted without license from IHS
Not for Resale

(5) Access doors in ducts shall be identified with a label having letters not less than ½ in. (13 mm) in height.
(6) The label shall read as follows in 8.8.8.4(6)(a), (b), (c), or (d):
  (a) FIRE/SMOKE DAMPER
  (b) SMOKE DAMPER
  (c) FIRE DAMPER
  (d) In an approved manner
(7) Access doors in ducts shall be tight-fitting and suitable for the required duct construction.
(8) Access and maintenance shall comply with the requirements of the mechanical code as specified in Chapter 50.

8.10.5.5 Smoke Damper Ratings.

8.10.5.5.1 Smoke damper leakage ratings shall be not less than Class II.

8.10.5.5.2 Elevated temperature ratings shall be not less than 250°F (140°C).

8.10.5.6 Smoke Detector. Dampers in air-transfer openings shall close upon detection of smoke by approved smoke detectors installed in accordance with *NFPA 72*.

8.10.6 Joints.

8.10.6.1 The provisions of 8.10.6 shall govern the materials and methods of construction used to protect joints in between and at the perimeter of smoke partitions or, where smoke partitions meet other smoke partitions, the floor or roof deck above, or the outside walls.

8.10.6.2 Joints made within or at the perimeter of smoke partitions shall be protected with a joint system that is capable of limiting the transfer of smoke.

8.11 Smoke Barriers.

8.11.1* General. Where required by Chapters 14 through 34, smoke barriers shall be provided to subdivide building spaces for the purpose of restricting the movement of smoke.

8.11.2* Continuity.

8.11.2.1 Smoke barriers required by this *Code* shall be continuous from an outside wall to an outside wall, from a floor to a floor, or from a smoke barrier to a smoke barrier, or a combination thereof.

8.11.2.2 Smoke barriers required by this *Code* shall be continuous through all concealed spaces, such as those found above a ceiling, including interstitial spaces.

8.11.2.3 A smoke barrier required for an occupied space below an interstitial space shall not be required to extend through the interstitial space, provided that the construction assembly forming the bottom of the interstitial space provides resistance to the passage of smoke equal to that provided by the smoke barrier.

8.11.3 Fire Barrier Used as Smoke Barrier. A fire barrier shall be permitted to be used as a smoke barrier, provided that it meets the requirements of Section 8.11.

8.11.4 Opening Protectives.

8.11.4.1 Doors in smoke barriers, in other than health care occupancies, detention and correctional occupancies, and board and care facilities shall be installed in accordance with NFPA 105, *Standard for the Installation of Smoke Door Assemblies*.

8.11.4.2 Where a fire protection rating is specified for a smoke barrier elsewhere in this *Code*, openings shall be protected as follows:

(1) Door opening protectives shall have a fire protection rating of not less than 20 minutes where tested in accordance with NFPA 252 without the hose stream test, unless otherwise specified by Chapters 15 through 34.
(2) Fire window assemblies shall comply with 8.7.9.
(3) Latching hardware shall not be required on doors in smoke barriers where so indicated in Chapters 15 through 34.
(4) Glazing used in sidelights and transoms adjacent to 20-minute doors in 1-hour fire resistance–rated smoke barriers shall be tested in accordance with 8.7.5 and shall attain a minimum 45-minute fire protection rating, including hose stream.

8.11.4.3 Door opening protectives in smoke barrier walls shall comply with 11.2.1.

8.11.5 Penetrations.

8.11.5.1 The provisions of 8.11.5 shall govern the materials and methods of construction used to protect through-penetrations and membrane penetrations of smoke barriers.

8.11.5.2 Penetrations for cables, cable trays, conduits, pipes, tubes, vents, wires, and similar items to accommodate electrical, mechanical, plumbing, and communications systems that pass through a wall, floor, or floor-ceiling assembly constructed as a smoke barrier, or through the ceiling membrane of a roof-ceiling of a smoke barrier, shall be protected by a listed system or a material capable of restricting the transfer of smoke.

8.11.5.3 Where a smoke barrier is also constructed as a fire barrier, the penetrations shall be protected in accordance with the requirements of Section 8.8 to limit the spread of fire for a time period equal to the fire resistance rating of the assembly, as required by 8.11.5, to restrict the transfer of smoke.

8.11.5.4 Where sprinklers penetrate a single membrane of a fire resistance–rated assembly in buildings equipped throughout with an approved automatic fire sprinkler system, noncombustible escutcheon plates shall be permitted, provided that the space around each sprinkler penetration does not exceed ½ in. (13 mm), measured between the edge of the membrane and the sprinkler.

8.11.5.5 Where the penetration item uses a sleeve to penetrate the smoke barrier, the sleeve shall be securely set in the smoke barrier, and the space between the item and the sleeve shall be filled with a listed system or a material capable of restricting the transfer of smoke.

8.11.5.6 Where designs take transmission of vibrations into consideration, any vibration isolation shall meet one of the following conditions:

(1) It shall be made on either side of the fire barrier.
(2) It shall be designed for the specific purpose.

8.11.6 Ducts and Air-Transfer Openings.

8.11.6.1 General. The provisions of 8.11.6 shall govern the materials and methods of construction used to protect ducts and air-transfer openings in smoke barriers.

Copyright National Fire Protection Association
Provided by IHS under license with NFPA
No reproduction or networking permitted without license from IHS
Not for Resale

8.11.6.2 Smoke Barriers.

8.11.6.2.1 Where a smoke barrier is penetrated by a duct or air-transfer opening, a smoke damper designed and tested in accordance with the requirements of UL 555S shall be installed.

8.11.6.2.2 Where a smoke barrier is also constructed as a fire barrier, a combination fire/smoke damper designed and tested in accordance with the requirements of UL 555 and UL 555S shall be installed.

8.11.6.3 Smoke Damper Exceptions. Smoke dampers shall not be required under the following conditions:

(1) Where specifically exempted by provisions in Chapters 15 through 34
(2) Where ducts or air-transfer openings are part of an engineered smoke control system and the smoke damper will interfere with the operation of a smoke control system
(3) Where the air in ducts continues to move and the air-handling system installed is arranged to prevent recirculation of exhaust or return air under fire emergency conditions
(4) Where the air inlet or outlet openings in ducts are limited to a single smoke compartment
(5) Where ducts penetrate floors that serve as smoke barriers

8.11.6.4 Installation.

8.11.6.4.1 Air-conditioning, heating, and ventilating ductwork and related equipment, including smoke dampers and combination fire and smoke dampers, shall be installed in accordance with NFPA 90A or NFPA 90B as specified in Chapter 50, where applicable.

8.11.6.4.2 The equipment specified in 8.11.6.4.1 shall be installed in accordance with the requirements of 8.11.6.4, the manufacturer's installation instructions, its listing, and the mechanical code as specified in Chapter 50.

8.11.6.5 Access and Identification. Fire and smoke dampers shall be provided with an approved means of access, as follows:

(1) The means of access shall be large enough to allow inspection and maintenance of the damper and its operating parts.
(2) The access shall not affect the integrity of fire resistance–rated assemblies.
(3) The access openings shall not reduce the fire resistance rating of the assembly.
(4) Access points shall be permanently identified.
(5) Access doors in ducts shall be identified with a label having letters not less than ½ in. (13 mm) in height.
(6) The label shall read as follows in 8.11.6.5(6)(a), (b), (c), or (d):
    (a) FIRE/SMOKE DAMPER
    (b) SMOKE DAMPER
    (c) FIRE DAMPER
    (d) In an approved manner
(7) Access doors in ducts shall be tight-fitting and suitable for the required duct construction.
(8) Access and maintenance shall comply with the requirements of the mechanical code as specified in Chapter 50.

8.11.6.6 Smoke Damper Ratings.

8.11.6.6.1 Smoke damper leakage ratings shall be not less than Class II.

8.11.6.6.2 Elevated temperature ratings shall be not less than 250°F (140°C).

8.11.6.7 Smoke Detectors.

8.11.6.7.1 Required smoke dampers in ducts penetrating smoke barriers shall close upon detection of smoke by means of approved smoke detectors in accordance with *NFPA 72*, unless ducts penetrate smoke barriers above the smoke barrier doors and the door release detector actuates the damper.

8.11.6.7.2 Required smoke dampers in air-transfer openings shall close upon detection of smoke by means of approved smoke detectors in accordance with *NFPA 72*.

8.11.6.7.3 Where a duct is provided on one side of the smoke barrier, the smoke detectors on the duct side shall be in accordance with 8.11.6.7.1.

8.11.7 Joints.

8.11.7.1 The provisions of 8.11.7 shall govern the materials and methods of construction used to protect joints in between and at the perimeter of smoke barriers where smoke barriers meet other smoke barriers, the floor or roof deck above, or the outside walls.

8.11.7.2 Joints made within or at the perimeter of smoke barriers shall be protected with a listed joint system or a material that is capable of restricting the transfer of smoke.

8.11.7.3 Joints made within or between smoke barriers shall be protected with a listed joint system or a material that is capable of restricting the transfer of smoke.

8.11.7.4 Smoke barriers that are constructed as fire barriers shall be protected with a listed joint system that is designed and tested to resist the spread of fire for a time period equal to the required fire resistance rating of the assembly in accordance with Section 8.9 and to restrict the transfer of smoke.

8.12 Vertical Openings.

8.12.1 General.

8.12.1.1 Every floor that separates stories in a building shall be constructed as a smoke barrier and shall meet one of the following:

(1) Openings shall restrict the passage of smoke as specified by 8.11.4.
(2) The requirement of 8.12.1.1(1) shall not apply where otherwise specified by 8.12.2, 8.12.3, 8.12.4, or Chapters 16 through 30.

8.12.1.2* Openings through floors shall be enclosed with fire barrier walls, shall be continuous from floor to floor or floor to roof, and shall be protected as appropriate for the fire resistance rating of the barrier.

8.12.1.3 The requirements of 8.12.1.2 shall not apply where otherwise specified by the following:

(1) Enclosure shall not be required where otherwise specified by 8.12.2, 8.12.3, 8.12.4, or Chapters 15 through 34.
(2)*Enclosure shall not be required for expansion or seismic joints designed to prevent the penetration of fire and shown to have a fire resistance rating of not less than the required fire resistance rating of the floor when tested in accordance with ANSI/UL 2079.
(3) Enclosure shall not be required for pneumatic tube conveyors protected in accordance with 8.8.7.

--`,,```,,,,````-`-`,,`,,`,`,,`---

Copyright National Fire Protection Association
Provided by IHS under license with NFPA
No reproduction or networking permitted without license from IHS
Not for Resale

8.12.1.4 Shafts that do not extend to the bottom or the top of the building or structure shall comply with either 8.12.1.4.1, 8.12.1.4.2, or 8.12.1.4.3.

8.12.1.4.1 Shafts shall be enclosed at the lowest or highest level of the shaft, respectively, with construction in accordance with 8.12.1.5 and Section 8.7.

8.12.1.4.2 Shafts shall be permitted to terminate in a room or space having a use related to the purpose of the shaft, provided that the room or space is separated from the remainder of the building by construction having a fire resistance rating and opening protectives in accordance with 8.12.1.5 and Section 8.7.

8.12.1.4.3 Shafts that do not extend to the bottom or top of the building or structure shall be permitted to be protected by approved fire dampers installed in accordance with their listing at the lowest or highest floor level, as applicable, within the shaft enclosure.

8.12.1.5* The fire resistance rating for the enclosure of floor openings shall be not less than as follows:

(1) Enclosures connecting four stories or more shall be 2-hour fire barriers.
(2) Enclosures connecting three stories or less shall be 1-hour fire barriers, but not less than the required fire resistance rating of the floor penetrated, and shall not be required to exceed 2 hours.
(3) Enclosures shall be as specified in Chapter 23 for lodging and rooming houses, in Chapter 24 for hotels, and in Chapter 25 for apartment buildings.
(4) Enclosures for exits shall be in accordance with 11.1.3.2.

8.12.2 Communicating Space. Unless prohibited by Chapters 16 through 30, unenclosed floor openings forming a communicating space between floor levels shall be permitted, provided that the following conditions are met:

(1) The communicating space does not connect more than three contiguous stories.
(2) The lowest or next to lowest story within the communicating space is a street floor.
(3) The entire floor area of the communicating space is open and unobstructed, such that a fire in any part of the space will be readily obvious to the occupants of the space prior to the time it becomes an occupant hazard.
(4) The communicating space is separated from the remainder of the building by fire barriers with not less than a 1-hour fire resistance rating, unless one of the following is met:
   (a) In buildings protected throughout by an approved automatic sprinkler system in accordance with NFPA 13 or NFPA 13R, a smoke barrier in accordance with Section 8.11 shall be permitted to serve as the separation required by 8.12.2(4).
   (b) The requirement of 8.12.2(4) shall not apply to fully sprinklered residential housing units of detention and correctional occupancies in accordance with 21.3.1(2).
(5) The communicating space has ordinary hazard contents protected throughout by an approved automatic sprinkler system in accordance with NFPA 13 or NFPA 13R or has only low hazard contents. *(See Chapter 6.)*
(6) Egress capacity is sufficient to provide for all the occupants of all levels within the communicating space to simultaneously egress the communicating space by considering it as single floor area in determining the required egress capacity.
(7)* Each occupant within the communicating space has access to not less than one exit without having to traverse another story within the communicating space.
(8) Each occupant not in the communicating space has access to not less than one exit without having to enter the communicating space.

8.12.3* Atrium. Unless prohibited by Chapters 16 through 30, an atrium shall be permitted, provided that the following conditions are met:

(1) The atrium is separated from the adjacent spaces by fire barriers with not less than a 1-hour fire resistance rating with opening protectives for corridor walls, unless one of the following criteria is met:
   (a) Any number of levels of the building shall be permitted to open directly to the atrium without enclosure based on the results of the engineering analysis required in 8.12.3(5).
   (b)* Glass walls and inoperable windows shall be permitted in lieu of the fire barriers where all of the following criteria are met:
      i. Automatic sprinklers shall be spaced along both sides of the glass wall and the inoperable window at intervals not to exceed 6 ft (1830 mm).
      ii. The automatic sprinklers shall be located at a distance from the glass not to exceed 12 in. (305 mm) and shall be arranged so that the entire surface of the glass is wet upon operation of the sprinklers.
      iii. The glass shall be tempered, wired, or laminated glass held in place by a gasket system that allows the glass framing system to deflect without breaking (loading) the glass before the sprinklers operate.
      iv. The automatic sprinklers shall not be required on the atrium side of the glass wall and the inoperable windows where there is no walkway or other floor area on the atrium side above the main floor level.
      v. Doors in glass walls shall be glass or other material that restricts the passage of smoke.
      vi. Doors shall be self-closing or automatic-closing upon detection of smoke.
(2) Access to exits is permitted to be within the atrium, and exit discharge in accordance with 11.7.2 is permitted to be within the atrium.
(3) The occupancy within the space meets the specifications for classification as low or ordinary hazard contents. *(See Chapter 6.)*
(4) The entire building is protected throughout by an approved, supervised automatic sprinkler system in accordance with NFPA 13 or NFPA 13R and 55.3.2.
(5)* An engineering analysis is performed that demonstrates that the building is designed to keep the smoke layer interface above the highest unprotected opening to adjoining spaces, or 6 ft (1830 mm) above the highest floor level of exit access open to the atrium for a period equal to 1½ times the calculated egress time or 20 minutes, whichever is greater.
(6)* An engineered smoke control system is installed to meet the requirements of 8.12.3(5) and is independently activated by each of the following:

Copyright National Fire Protection Association
Provided by IHS under license with NFPA
No reproduction or networking permitted without license from IHS
Not for Resale

(a) Upon actuation of the required automatic sprinkler system within the atrium or areas open to the atrium
(b) Manual controls that are readily accessible to the fire department

8.12.4 Convenience Openings.

8.12.4.1 A vertical opening serving as other than an exit enclosure, connecting only two adjacent stories, and piercing only one floor shall be permitted to be open to one of the two stories.

8.12.4.2 Where permitted by Chapters 16 through 30, unenclosed vertical openings not concealed within the building construction shall be permitted as follows:

(1) Such openings shall connect not more than two adjacent stories (one floor pierced only).
(2) Such openings shall be separated from unprotected vertical openings serving other floors by a barrier complying with 8.12.1.5.
(3) Such openings shall be separated from corridors.
(4)*Such openings shall not serve as a required means of egress.

8.12.5 Service Openings.

8.12.5.1 Service openings for conveyors, where required to be open on more than one story at the same time for purposes of operation, shall be provided with closing devices in accordance with 11.2.1.8.

8.12.5.2 Moving walks not constituting an exit, and escalators, shall have their floor openings enclosed or protected as required for other vertical openings, unless permitted by the following:

(1) The requirement of 8.12.5.2 shall not apply to escalators in large, open areas such as atriums and enclosed shopping malls.
(2)*In buildings protected throughout by an approved automatic sprinkler system in accordance with NFPA 13 or NFPA 13R, escalators or moving walk openings shall be permitted to be protected in accordance with the method detailed in NFPA 13 or in accordance with a method approved by the authority having jurisdiction.
(3) Escalators shall be permitted to be protected in accordance with 8.12.5.3

8.12.5.3 In buildings protected throughout by an approved automatic sprinkler system in accordance with NFPA 13 or NFPA 13R, escalators or moving walk openings shall be permitted to be protected by rolling steel shutters appropriate for the fire resistance rating of the vertical opening protected, and the following criteria shall be met:

(1) The shutters shall close automatically and independently of each other upon smoke detection and sprinkler operation.
(2) There shall be a manual means of operating and testing the operation of the shutter.
(3) The shutters shall be operated not less than once a week to ensure that they remain in proper operating condition.
(4) The shutters shall operate at a speed not to exceed 30 ft/min (0.15 m/s) and shall be equipped with a sensitive leading edge.
(5) The leading edge shall arrest the progress of a moving shutter and cause it to retract a distance of approximately 6 in. (150 mm) upon the application of a force not exceeding 20 lbf (90 N) applied to the surface of the leading edge.
(6) The shutter, following the retraction specified in 8.12.5.3(5), shall continue to close.
(7) The operating mechanism for the rolling shutter shall be provided with standby power complying with the provisions of Chapter 52.

8.12.5.4 The number of elevator cars permitted in a hoistway shall be in accordance with Section 54.6.

8.13 Mezzanine.

8.13.1 General.

8.13.1.1 A mezzanine shall not be included as a story for the purpose of determining the allowable number of stories in a building.

8.13.1.2 Multilevel residential housing areas in detention and correctional occupancies in accordance with Chapter 21 shall be exempt from the provisions of 8.13.2 and 8.13.3.

8.13.2 Area Limitations.

8.13.2.1 The aggregate area of mezzanines within a room, other than those located in special-purpose industrial occupancies, shall not exceed one-third the open area of the room in which the mezzanines are located.

8.13.2.2 Enclosed space shall not be included in a determination of the size of the room in which the mezzanine is located.

8.13.2.3 There shall be no limit on the number of mezzanines in a room.

8.13.2.4 For purposes of determining the allowable mezzanine area, the area of the mezzanines shall not be included in the area of the room.

8.13.3 Openness.

8.13.3.1 All portions of a mezzanine, other than walls not more than 42 in. (1065 mm) high, columns, and posts, shall be open to and unobstructed from the room in which the mezzanine is located, unless the occupant load of the aggregate area of the enclosed space does not exceed 10.

8.13.3.2 A mezzanine having two or more means of egress shall not be required to open into the room in which it is located if not less than one of the means of egress provides direct access from the enclosed area to an exit at the mezzanine level.

8.14 Concealed Spaces.

8.14.1 Draft Stops.

8.14.1.1 Any concealed combustible space in which building materials having a flame spread index greater than Class A are exposed shall be draftstopped as follows:

(1) Every unoccupied attic space shall be subdivided by draftstops into areas not to exceed 3000 ft^2 (280 m^2).
(2) Any concealed space between the ceiling and the floor or roof above shall be draftstopped for the full depth of the space along the line of support for the floor or roof structural members and, if necessary, at other locations to form areas not to exceed 1000 ft^2 (93 m^2) for any space between the ceiling and floor and 3000 ft^2 (280 m^2) for any space between the ceiling and roof.

8.14.1.2 The requirements of 8.14.1.1 shall not apply if either of the following conditions is met:

Copyright National Fire Protection Association
Provided by IHS under license with NFPA
No reproduction or networking permitted without license from IHS
Not for Resale

(1) The requirements shall not apply where the concealed space is protected throughout by an approved automatic sprinkler system in accordance with NFPA 13.
(2) The requirements shall not apply to concealed spaces serving as plenums.

8.14.1.3 Draftstopping materials shall be not less than ½ in. (13 mm) gypsum board, 15⁄32 in. (12 mm) wood structural panel, or other approved materials adequately supported.

8.14.1.4 The integrity of all draftstops shall be maintained.

8.14.2 Fireblocks.

8.14.2.1 Concealed spaces constructed of combustible materials shall be fireblocked as follows:

(1) In exterior and interior stud walls, at ceilings, and at floor levels
(2) In combustible stud walls and partitions including furred spaces, placed so that the maximum dimension of a concealed space is 8 ft (2440 mm)
(3) At all interconnections between concealed vertical and horizontal spaces, such as those that occur at soffits, drop ceilings, and cove ceilings
(4) In concealed spaces between stair stringers at the top and bottom of the run
(5) At openings around vents, pipes, and ducts at ceiling and floor levels
(6) In the spaces between chimneys and wood framing, which are to be solidly filled with approved materials

8.14.2.2 Fireblocks, when of wood, shall be not less than 2 in. (51 mm) thick and shall effectively fill all spaces for the entire width of depth of the framing or structural member.

8.14.2.3 Fireblocking shall be securely and tightly fitted into place.

8.14.2.4 Fireblocks shall consist of one of the following:

(1) Nominal 2 in. (51 mm) lumber of two thicknesses of nominal 1 in. (25 mm) lumber with broken lap joints; one thickness of 23⁄32 in. (18 mm) wood structural panel with joints backed by 23⁄32 in. (18 mm) wood structural panel; or one thickness of ¾ in. (19 mm) particleboard with joints backed by ¾ in. (19 mm) particleboard
(2) Gypsum board, cement fiber board, batts or blankets of mineral wool or glass fiber, or other approved materials that are capable of resisting the free passage of fire and smoke within the concealed space installed in such a manner as to be securely retained in place

8.14.2.5 Loose-fill insulation material shall not be used as a fireblock unless specifically tested in the form and manner intended for use to demonstrate its ability to remain in place and to retard the spread of fire and hot gases.

8.14.2.6 The integrity of fireblocks shall be maintained.

8.14.3 Combustibles in Concealed Spaces. Combustible materials shall not be permitted within the concealed spaces of buildings classified as Type I or Type II construction and within walls required to be constructed of noncombustible or limited-combustible materials by 7.2.3, unless otherwise permitted by one of the following:

(1) Combustible materials permitted in accordance with 7.2.3.2.13 and 7.2.3.2.14
(2) Combustible materials having a Class A rating as specified in Chapter 10
(3) Combustible mechanical, plumbing, and electrical components installed in accordance with the applicable code
(4) Combustible materials permitted within exterior walls in accordance with 7.2.3.2.12

8.15 Special Hazard Protection.

8.15.1* Protection from any area having a degree of hazard greater than that normal to the general occupancy of the building or structure shall be provided by one of the following means:

(1) Enclosure of the area with a fire barrier without windows that has a 1-hour fire resistance rating in accordance with Section 8.4
(2) Protection of the area with automatic extinguishing systems in accordance with Chapter 55
(3) Application of both 8.15.1(1) and (2) where the hazard is severe or where otherwise specified by Chapters 16 through 34

8.15.2 Where protection is provided with automatic extinguishing systems without fire resistance–rated separation, the space protected shall be enclosed with smoke partitions in accordance with Section 8.10, unless otherwise permitted by one of the following:

(1) This requirement shall not apply to mercantile occupancy general storage areas and stockrooms protected by automatic sprinklers in accordance with NFPA 13.
(2) This requirement shall not apply to hazardous areas in industrial occupancies protected by automatic extinguishing systems in accordance with 29.3.2.
(3) This requirement shall not apply to hazardous areas in detention and correctional occupancies protected by automatic extinguishing systems in accordance with 21.3.2.

8.15.3 Doors in barriers required to have a fire resistance rating shall have a ¾-hour fire protection rating and shall be self-closing or automatic-closing in accordance with 11.2.1.8.

8.16 Insulating Materials.

8.16.1 Flame Spread. Insulating materials, including vapor barriers, breather papers, facings, and similar coverings, and every layer of multilayer reflective foil insulations, shall comply with the requirements of Section 8.16.

8.16.1.1 Where a flame spread index or a smoke developed index is specified in Section 8.16, such index shall be determined in accordance with the requirements of NFPA 255, *Standard Method of Test of Surface Burning Characteristics of Building Materials*, or ASTM E 84, *Standard Test Method of Surface Burning Characteristics of Building Materials*.

8.16.1.2 Any material that is subject to an increase in flame spread rating or smoke developed index beyond the limits herein established through the effects of age, moisture, or other atmospheric conditions shall not be permitted, unless such material complies with one of the following:

(1) Duct and pipe insulation, coverings, and linings contained in plenums for buildings of all types of construction shall comply with the requirements of 7.2.3.2.15.
(2) Foamed plastic insulation, other than duct and pipe insulation, coverings, and linings contained in plenums shall comply with Chapter 48.

8.16.2 Concealed Insulation.

8.16.2.1 Insulating materials shall meet the following criteria:

Copyright National Fire Protection Association
Provided by IHS under license with NFPA
No reproduction or networking permitted without license from IHS
Not for Resale

(1) Where concealed as installed in buildings of any type construction, insulating materials shall have a flame spread index of not more than 75 and a smoke developed index of not more than 450.
(2) Cellulose loose-fill insulation that is not spray applied and that complies with the requirements of 8.16.6 shall be required to meet a smoke developed index of not more than 450.

8.16.2.2 Where insulating materials are installed in concealed spaces in buildings of Type III, Type IV, or Type V construction, the flame spread and smoke developed limitations of 8.16.2.1 shall not apply to facings, coverings, and layers of reflective foil insulation, provided that the facing is installed behind, and in substantial contact with, the unexposed surface of the ceiling, wall, or floor finish.

8.16.3 Exposed Insulation.

8.16.3.1 General. Insulating materials shall meet the following criteria:

(1) Where exposed as installed in buildings of any type construction, insulating materials shall have a flame spread index of not more than 25 and a smoke developed index of not more than 450.
(2) Cellulose loose-fill insulation that is not spray applied and that complies with the requirements of 8.16.6 shall be required to meet a smoke developed index of not more than 450.

8.16.3.2 Attic Floors.

8.16.3.2.1 Exposed insulation materials installed on attic floors shall have a critical radiant flux of not less than 0.12 W/cm^2 when tested in accordance with ASTM E 970, *Standard Test Method for Critical Radiant Flux of Exposed Attic Floor Insulation Using a Radiant Heat Energy Source*.

8.16.3.2.2 Thermoplastic exposed insulation materials that melt or shrink away when exposed to radiant heat shall be permitted to be installed exposed on attic floors, provided that they meet the following criteria:

(1) They comply with 8.16.5.
(2) They do not ignite when tested in accordance with ASTM E 970.
(3) They exhibit a self-ignition temperature of 752°F (400°C) or greater where tested in accordance with ASTM D 1929, *Standard Test Method for Determining Ignition Temperature of Plastics*.

8.16.4 Roof Insulation. The use of combustible roof insulation shall be permitted in any type construction, provided that it is covered with approved roof coverings directly applied thereto. *(See Chapter 38.)*

8.16.5 Loose-Fill Insulation. Unless they meet the criteria of 8.16.6, loose-fill insulation materials that cannot be mounted in the NFPA 255 apparatus without a screen or artificial supports shall comply with the flame spread and smoke developed limits of 8.16.2.1 and 8.16.3 when tested in accordance with CAN/ULC S102.2, *Standard Method of Test for Surface Burning Characteristics of Floor Coverings and Miscellaneous Materials and Assemblies*.

8.16.6 Cellulose Loose-Fill Insulation.

8.16.6.1 Cellulose loose-fill insulation shall comply with CPSC 16 CFR, Part 1209, *Interim Safety Standard for Cellulose Insulation*, and CPSC 16 CFR, Part 1404, *Cellulose Insulation*.

8.16.6.2 Each package of such insulating material shall be clearly labeled in accordance with CPSC 16 CFR, Part 1209 and CPSC 16 CFR, Part 1404.

8.16.7 Insulation and Covering on Pipe and Tubing.

8.16.7.1 Insulation and covering on pipe and tubing not installed in plenums shall have a flame spread index of not more than 25 and a smoke developed index of not more than 450.

8.16.7.2 Insulation and covering on pipe and tubing installed in plenums shall comply with the requirements contained in NFPA 90A.

8.17 Rubbish Chutes and Laundry Chutes.

8.17.1 Openings through floors for rubbish chutes and laundry chutes shall be separately enclosed by fire barrier walls constructed in accordance with the provisions of Section 8.4 and having a fire resistance rating in accordance with the provisions of Section 8.12.

8.17.2 Inlet openings serving chutes shall be protected in accordance with Section 8.4.

8.17.3 Doors of rubbish chutes and laundry chutes shall open only to a room that is designed and used exclusively for accessing the chute opening, except as modified by 8.17.4.

8.17.4 Rubbish chutes and laundry chutes shall be permitted to open into rooms not exceeding 400 ft^2 (37.2 m^2) in area used for storage, provided that the room is protected by automatic sprinklers.

Chapter 9 Reserved

Chapter 10 Interior Finish

10.1* General.

10.1.1 Classification of interior finish materials shall be in accordance with tests made under conditions simulating actual installations, provided that the authority having jurisdiction shall be permitted to establish the classification of any material on which a rating by standard test is not available, unless otherwise provided in 10.1.2.

10.1.2 Materials applied, in total thickness of less than 1/28 in. (0.90 mm), directly to the surface of walls and ceilings shall not be considered interior finish and shall be exempt from tests simulating actual installation if they meet the requirements of Class A interior wall or ceiling finish when tested in accordance with 10.3.1 using fiber cement board as the substrate material.

10.1.3* Fixed or movable walls and partitions, paneling, and wall pads and crash pads, applied structurally or for decoration, acoustical correction, surface insulation, or other purposes, shall be considered interior finish and shall not be considered decorations or furnishings.

10.2* Use of Interior Finishes.

10.2.1 Requirements for interior wall and ceiling finish shall apply as follows:

(1) Where specified elsewhere in this *Code* for specific occupancies as noted in Chapter 11 and Chapters 16 through 34
(2) As specified in Section 10.4

Copyright National Fire Protection Association
Provided by IHS under license with NFPA
No reproduction or networking permitted without license from IHS
Not for Resale

10.2.2* Requirements for interior floor finish shall apply where any of the following conditions exist:

(1) Where floor finish requirements are specified elsewhere in this *Code*
(2) Where carpet or carpet-like material is used
(3) Where there is a floor finish of unusual hazard

10.3 Interior Wall or Ceiling Finish Testing and Classification.

10.3.1* Interior wall or ceiling finish that is required elsewhere in this *Code* to be Class A, Class B, or Class C shall be classified based on test results from NFPA 255, *Standard Method of Test of Surface Burning Characteristics of Building Materials*, or ASTM E 84, *Standard Test Method of Surface Burning Characteristics of Building Materials*, except as indicated in 10.3.1.1 or 10.3.1.2.

10.3.1.1 Exposed portions of structural members complying with the requirements for Type IV(2HH) construction in accordance with 7.2.5 of this *Code* shall be exempt from the testing and classification provisions of NFPA 255 or ASTM E 84.

10.3.1.2 Interior wall and ceiling finish tested in accordance with NFPA 286, *Standard Methods of Fire Tests for Evaluating Contribution of Wall and Ceiling Interior Finish to Room Fire Growth*, and meeting the conditions of 10.3.6.2, shall be permitted to be used where a Class A classification in accordance with NFPA 255 or ASTM E 84 is required.

10.3.1.3* Fire-retardant coatings shall not be used to obtain compliance with the interior finish requirements of this *Code*.

10.3.2* Products required to be tested in accordance with NFPA 255 or ASTM E 84 shall be grouped in the classes described in 10.3.2.1 through 10.3.2.3 in accordance with their flame spread and smoke development, except as indicated in 10.3.3.

10.3.2.1 Class A Interior Wall and Ceiling Finish. Class A interior wall and ceiling finishes shall be those finishes with a flame spread of 0–25 and smoke development of 0–450 and shall include any material classified at 25 or less on the flame spread test scale and 450 or less on the smoke test scale. Any element thereof, when so tested, shall not continue to propagate fire.

10.3.2.2 Class B Interior Wall and Ceiling Finish. Class B interior wall and ceiling finishes shall be those finishes with a flame spread of 26–75 and smoke development of 0–450 and shall include any material classified at more than 25 but not more than 75 on the flame spread test scale and 450 or less on the smoke test scale.

10.3.2.3 Class C Interior Wall and Ceiling Finish. Class C interior wall and ceiling finishes shall be those finishes with a flame spread of 76–200 and smoke development of 0–450 and shall include any material classified at more than 75 but not more than 200 on the flame spread test scale and 450 or less on the smoke test scale.

10.3.3 Interior wall and ceiling finish tested in accordance with NFPA 286, *Standard Methods of Fire Tests for Evaluating Contribution of Wall and Ceiling Interior Finish to Room Fire Growth*, and meeting the conditions of 10.3.6.2, shall be permitted to be used where a Class A classification in accordance with NFPA 255 or ASTM E 84 is required.

10.3.4 The classification of interior finish specified in 10.3.2 shall be that of the basic material used by itself or in combination with other materials.

10.3.5 Wherever the use of Class C interior wall and ceiling finish is required, Class A or Class B shall be permitted. Where Class B interior wall and ceiling finish is required, Class A shall be permitted.

10.3.6* Products tested in accordance with NFPA 265, *Standard Methods of Fire Tests for Evaluating Room Fire Growth Contribution of Textile Coverings on Full Height Panels and Walls*, shall comply with the criteria of 10.3.6.1. Products tested in accordance with NFPA 286 shall comply with the criteria of 10.3.6.2.

10.3.6.1* Products shall be tested using the method B test protocol of NFPA 265. The following conditions shall be met:

(1) Flame shall not spread to the ceiling during the 40 kW exposure.
(2) During the 150 kW exposure, the following criteria shall be met:
   (a) Flame shall not spread to the outer extremities of the sample on the 8 ft × 12 ft (2440 mm × 3660 mm) wall.
   (b) Flashover shall not occur.

10.3.6.2 Products shall be tested using the test protocol of NFPA 286. The following conditions shall be met:

(1) Flame shall not spread to the ceiling during the 40 kW exposure.
(2) During the 160 kW exposure, the following criteria shall be met:
   (a) Flame shall not spread to the outer extremities of the sample on the 8 ft × 12 ft (2440 mm × 3660 mm) wall.
   (b) Flashover shall not occur.
(3) The peak heat release rate throughout the test shall not exceed 800 kW.
(4) For new installations, the total smoke released throughout the test shall not exceed 10,760 ft^2 (1000 m^2).

10.4* Specific Materials.

10.4.1 Textile Wall or Ceiling Materials. The use of textile materials on walls or ceilings shall comply with one of the following conditions:

(1) Textile materials having a Class A rating *(see 10.3.2)* shall be permitted on the walls or ceilings of rooms or areas protected by an approved automatic sprinkler system.
(2) Textile materials having a Class A rating *(see 10.3.2)* shall be permitted on partitions that do not exceed three-quarters of the floor-to-ceiling height or do not exceed 8 ft (2440 mm) in height, whichever is less.
(3) Textile materials having a Class A rating *(see 10.3.2)* shall be permitted to extend not more than 48 in. (1220 mm) above the finished floor on ceiling-height walls and ceiling-height partitions.
(4)* Textile materials shall be permitted on walls and partitions where tested in accordance with NFPA 265. *(See 10.3.6.)*

10.4.2* Expanded Vinyl Wall or Ceiling Coverings. The use of expanded vinyl wall or ceiling coverings shall comply with one of the following conditions:

(1) Materials having a Class A rating *(see 10.3.2)* shall be permitted on the walls or ceilings of rooms or areas protected by an approved automatic sprinkler system.
(2) Materials having a Class A rating *(see 10.3.2)* shall be permitted on partitions that do not exceed three-quarters of the floor-to-ceiling height or do not exceed 8 ft (2440 mm) in height, whichever is less.

Copyright National Fire Protection Association
Provided by IHS under license with NFPA
No reproduction or networking permitted without license from IHS
Not for Resale

(3) Materials having a Class A rating *(see 10.3.2)* shall be permitted to extend up to 48 in. (1220 mm) above the finished floor on ceiling-height walls and ceiling-height partitions.
(4) Materials shall be permitted on walls and partitions where tested in accordance with NFPA 265. *(See 10.3.6.)*
(5) Materials shall be permitted on walls, partitions, and ceilings where tested in accordance with NFPA 286. *(See 10.3.6.)*

10.4.3 Cellular or Foamed Plastic. Cellular or foamed plastic materials shall not be used as interior wall and ceiling finish, unless specifically permitted by 10.4.3.1 or 10.4.3.2. This section shall apply to both exposed foamed plastics and to foamed plastics used in conjunction with a textile or vinyl facing or cover.

10.4.3.1* Cellular or foamed plastic material meeting the definition of foamed plastic insulation shall be permitted where subjected to large-scale fire tests that substantiate the combustibility characteristics of the material for the use intended under actual fire conditions. The tests shall be performed on a finished foamed plastic assembly related to the actual end-use configuration, including any cover or facing, and at the maximum thickness intended for use.

10.4.3.2 Cellular or foamed plastic shall be permitted for trim not in excess of 10 percent of the wall or ceiling area, provided that it is not less than 20 lb/ft^3 (320 kg/m^3) in density, is limited to ½ in. (13 mm) in thickness and 4 in. (100 mm) in width, and complies with the requirements for Class A or Class B interior wall and ceiling finish, as described in 10.3.2; however, the smoke rating shall not be limited.

10.4.4* Light-Transmitting Plastics. Light-transmitting plastics used as interior wall and ceiling finish shall be permitted based on large-scale fire tests that substantiate the combustibility characteristics of the plastics for the use intended under actual fire conditions. The tests shall be performed on a light-transmitting plastic assembly related to the actual end-use configuration and on the maximum thickness intended for use.

10.4.5 Metal Ceiling and Wall Panels. Listed, factory-finished Class A metal ceiling and wall panels shall be permitted to be finished with one additional application of paint. These painted panels shall be permitted for use in areas where Class A interior finishes are required. The total paint thickness shall not exceed ⅛ in. (0.90 mm).

10.5 Trim and Incidental Finish.

10.5.1 General. Interior wall and ceiling trim and incidental finish, other than wall base in accordance with 10.5.2 and bulletin boards and posters in accordance with 10.5.3, not in excess of 10 percent of the aggregate wall and ceiling areas of any room or space shall be permitted to be Class C materials in occupancies where interior wall and ceiling finish of Class A or Class B is required.

10.5.2 Wall Base. Interior floor trim material used at the junction of the wall and the floor to provide a functional or decorative border, and not exceeding 6 in. (150 mm) in height, shall meet the interior wall finish requirements for its location or the requirements for Class II interior floor finish, as described in 10.6.4, using the test described in 10.6.3. If a Class I floor finish is required, the interior floor trim shall be Class I.

10.5.3 Bulletin Boards and Posters. Bulletin boards and posters attached directly to the wall shall not exceed 20 percent of the aggregate wall area to which they are applied.

10.6* Interior Floor Finish Testing and Classification.

10.6.1 Carpet and carpet-like interior floor finishes shall comply with ASTM D 2859, *Standard Test Method for Ignition Characteristics of Finished Textile Floor Covering Materials.*

10.6.2* Floor coverings, other than carpet, that are judged to represent an unusual hazard shall have a minimum critical radiant flux of 0.1 W/cm^2.

10.6.3* Interior floor finishes shall be classified in accordance with 10.6.4, based on test results from NFPA 253, *Standard Method of Test for Critical Radiant Flux of Floor Covering Systems Using a Radiant Heat Energy Source*, or ASTM E 648, *Standard Test Method for Critical Radiant Flux of Floor Covering Systems Using a Radiant Heat Energy Source.*

10.6.4 Interior floor finishes shall be grouped in the classes specified in 10.6.4.1 and 10.6.4.2 in accordance with the critical radiant flux ratings.

10.6.4.1 Class I Interior Floor Finish. Class I interior floor finish shall have a critical radiant flux of not less than 0.45 W/cm^2, as determined by the test described in 10.6.3.

10.6.4.2 Class II Interior Floor Finish. Class II interior floor finish shall have a critical radiant flux of not less than 0.22 W/cm^2, but less than 0.45 W/cm^2, as determined by the test described in 10.6.3.

10.6.5 Wherever the use of Class II interior floor finish is required, Class I interior floor finish shall be permitted.

10.7 Automatic Sprinklers.

10.7.1 Unless specifically prohibited elsewhere in this *Code*, where an approved automatic sprinkler system is in accordance with Section 55.3, Class C interior wall and ceiling finish materials shall be permitted in any location where Class B is required, and Class B interior wall and ceiling finish materials shall be permitted in any location where Class A is required.

10.7.2 Unless specifically prohibited elsewhere in this *Code*, where an approved automatic sprinkler system is in accordance with Section 55.3 throughout the fire compartment or smoke compartment containing the interior floor finish, Class II interior floor finish shall be permitted in any location where Class I interior floor finish is required, and where Class II is required, no critical radiant flux rating shall be required.

Chapter 11 Means of Egress

11.1 General.

11.1.1* Application. Means of egress for buildings shall comply with this chapter.

11.1.2 Definitions. See Chapter 3.

11.1.3 Separation of Means of Egress.

11.1.3.1 Exit Access Corridors. Except as otherwise provided in Chapters 16 through 31, corridors used as exit access and serving an area having an occupant load exceeding 30 shall be separated from other parts of the building by walls having not less than a 1-hour fire resistance rating in accordance with Section 8.4.

11.1.3.2 Exits.

11.1.3.2.1 Where this *Code* requires an exit to be separated from other parts of the building, the exit shall be separated by

Copyright National Fire Protection Association
Provided by IHS under license with NFPA
No reproduction or networking permitted without license from IHS
Not for Resale

horizontal and vertical fire barriers that meet the requirements of Sections 8.4 and 8.6 and 11.1.3.2.1.1 through 11.1.3.2.1.8.

11.1.3.2.1.1 The fire barriers shall have not less than a 1-hour fire resistance rating where the exit connects three stories or less.

11.1.3.2.1.2 The fire barriers shall have not less than a 2-hour fire resistance rating where the exit connects four or more stories. The fire barriers shall be supported by construction having not less than a 2-hour fire resistance rating.

11.1.3.2.1.3 One-hour enclosures in accordance with 24.2.2.1.2 and 25.2.2.1.2 shall be permitted as an alternative to 11.1.3.2.1.2.

11.1.3.2.1.4 Openings in the separation shall be protected by fire door assemblies equipped with door closers complying with 11.2.1.8.

11.1.3.2.1.5* Openings in exit enclosures shall be limited to doors from normally occupied spaces and corridors and for egress from the enclosure, unless such openings are in exit passageways in mall buildings, as provided in 27.2.2.7.

11.1.3.2.1.6 Penetrations into and openings through an exit enclosure assembly shall be prohibited, except for the following:

(1) Doors permitted by 11.1.3.2.1.5
(2)*Electrical conduit serving the stairway
(3) Ductwork and equipment necessary for independent stair pressurization
(4) Water or steam piping necessary for the heating or cooling of the exit enclosure
(5) Sprinkler piping
(6) Standpipes

11.1.3.2.1.7 Penetrations for fire alarm circuits shall be permitted within enclosures where fire alarm circuits are installed in metal conduit and penetrations are protected in accordance with Section 8.8.

11.1.3.2.1.8 Penetrations or communicating openings shall be prohibited between adjacent exit enclosures.

11.1.3.2.2 An exit enclosure shall provide a continuous protected path of travel to an exit discharge.

11.1.3.2.3* An exit enclosure shall not be used for any purpose that has the potential to interfere with its use as an exit and, if so designated, as an area of refuge. *(See also 11.2.2.5.3.)*

11.1.4 Interior Finish in Exit Enclosures.

11.1.4.1* Interior Wall and Ceiling Finish in Exit Enclosures. The flame spread of interior finish on walls and ceilings in exit enclosures shall be limited to Class A or Class B in accordance with Chapter 10.

11.1.4.2* Interior Floor Finish in Exit Enclosures. Interior floor finish in exit enclosures, including stair treads and risers, shall be not less than Class II in accordance with 10.6.4.

11.1.5* Headroom.

11.1.5.1 Means of egress shall be designed and maintained to provide headroom in accordance with other sections of this *Code*, and such headroom shall be not less than 7 ft 6 in. (2285 mm), with projections from the ceiling not less than 6 ft 8 in. (2030 m) nominal above the finished floor.

11.1.5.2 Headroom in industrial equipment access areas provided in 29.2.5.3 shall be permitted.

11.1.5.3 The minimum ceiling height shall be maintained for not less than two-thirds of the ceiling area of any room or space, provided that the ceiling height of the remaining ceiling area is not less than 6 ft 8 in. (2030 mm).

11.1.5.4 Headroom on stairs shall be not less than 6 ft 8 in. (2030 mm) and shall be measured vertically above a plane parallel to, and tangent with, the most forward projection of the stair tread.

11.1.6 Walking Surfaces in Means of Egress.

11.1.6.1 General. Walking surfaces in the means of egress shall comply with 11.1.6.2 through 11.1.6.4.

11.1.6.2 Changes in Elevation. Abrupt changes in elevation of walking surfaces shall not exceed ¼ in. (6.3 mm). Changes in elevation exceeding ¼ in. (6.3 mm), but not exceeding ½ in. (13 mm), shall be beveled 1 to 2. Changes in elevation exceeding ½ in. (13 mm) shall be considered a change in level and shall be subject to the requirements of 11.1.7.

11.1.6.3 Level.

11.1.6.3.1 Walking surfaces, other than as provided in 11.1.6.3.2, shall comply with the following:

(1) Walking surfaces shall be nominally level.
(2) The slope of a walking surface in the direction of travel shall not exceed 1 in 20, unless the ramp requirements of 11.2.5 are met.
(3) The slope perpendicular to the direction of travel shall not exceed 1 in 48.

11.1.6.3.2 Vehicle ramps in parking structures, as permitted in 30.8.2.2.6, and not on an accessible means of egress or other accessible element shall be exempt from the provisions of 11.1.6.3.1.

11.1.6.4* Slip Resistance. Walking surfaces shall be slip resistant under foreseeable conditions. The walking surface of each element in the means of egress shall be uniformly slip resistant along the natural path of travel.

11.1.7 Changes in Level in Means of Egress.

11.1.7.1 Changes in level in means of egress shall be achieved by an approved means of egress where the elevation difference exceeds 21 in. (535 mm).

11.1.7.2* Changes in level in means of egress not in excess of 21 in. (535 mm) shall be achieved either by a ramp complying with the requirements of 11.2.5 or by a stair complying with the requirements of 11.2.2.

11.1.7.2.1 Where a ramp is used to meet the requirement of 11.1.7.2, the presence and location of ramped portions of walkways shall be readily apparent.

11.1.7.2.2 Where a stair is used to meet the requirement of 11.1.7.2, the tread depth of such stair shall be not less than 13 in. (330 mm).

11.1.7.2.3 Tread depth in industrial equipment access areas, as provided in 29.2.5.3, shall be permitted.

11.1.7.2.4 The presence and location of each step shall be readily apparent.

Copyright National Fire Protection Association
Provided by IHS under license with NFPA
No reproduction or networking permitted without license from IHS
Not for Resale

11.1.8 Guards.

11.1.8.1 Guards in accordance with 11.2.2.4 shall be provided at the open sides of means of egress that exceed 30 in. (760 mm) above the floor or grade below, unless otherwise specified in 11.1.8.2.

11.1.8.2 Guards shall not be required for the following locations:

(1) On the loading side of loading docks or piers
(2) On the audience side of stages and raised platforms, including steps leading up to the stage and raised platforms
(3) On raised stage and platform floor areas, such as runways, ramps, and side stages used for entertainment or presentations
(4) Where vertical openings are included in the performance area of stages and platforms
(5) At walking surfaces appurtenant to stages and platforms for utilization of special lighting or equipment
(6) Along vehicle service pits not accessible to the public
(7) In assembly seating in accordance with 16.2.11

11.1.9 Impediments to Egress. Any device or alarm installed to restrict the improper use of a means of egress shall be designed and installed so that it cannot, even in case of failure, impede or prevent emergency use of such means of egress, unless otherwise provided in 11.2.1.6 and Chapters 19 and 21.

11.1.10 Means of Egress Reliability.

11.1.10.1* Maintenance. Means of egress shall be continuously maintained free of all obstructions or impediments to full instant use in the case of fire or other emergency.

11.1.10.2 Furnishings and Decorations in Means of Egress.

11.1.10.2.1 No furnishings, decorations, or other objects shall obstruct the access to, egress from, or visibility of exits.

11.1.10.2.2 There shall be no obstructions by railings, barriers, or gates that divide the open space into sections appurtenant to individual rooms, apartments, or other occupied spaces. Where the authority having jurisdiction finds the required path of travel to be obstructed by furniture or other movable objects, the authority shall be permitted to require that such objects be secured out of the way or shall be permitted to require that railings or other permanent barriers be installed to protect the path of travel against encroachment.

11.1.10.2.3 Mirrors shall not be placed on exit doors. Mirrors shall not be placed in, or adjacent to, any exit in such a manner as to confuse the direction of egress.

11.2 Means of Egress Components.

11.2.1 Doors.

11.2.1.1 General.

11.2.1.1.1 A door assembly in a means of egress shall conform to the general requirements of Section 11.1 and to the special requirements of 11.2.1. Such an assembly shall be designated as a door.

11.2.1.1.2 Every door and every principal entrance that is required to serve as an exit shall be designed and constructed so that the way of egress travel is obvious and direct. Windows that, because of their physical configuration or design and the materials used in their construction, have the potential to be mistaken for doors shall be made inaccessible to the occupants by barriers or railings.

11.2.1.1.3* For the purposes of Section 11.2, a building shall be considered to be occupied at any time it is open for general occupancy, at any time it is open to the public, or at any other time it is occupied by more than 10 persons.

11.2.1.1.4* Doors and door assemblies required elsewhere in this *Code* to comply with the provisions of 11.2.1.1.4 shall be in accordance with NFPA 105, *Standard for the Installation of Smoke Door Assemblies.*

11.2.1.2 Width.

11.2.1.2.1* Egress Capacity Width. For purposes of calculating capacity, the width of doors shall be measured as follows:

(1) For swinging doors, only the width of the doorway when the door is open 90 degrees, as measured in accordance with 11.2.1.2.1(3) and (4), shall be included.
(2) For other types of doors, only the width of the doorway when the door is in the fully open position, as measured in accordance with 11.2.1.2.1(3) and (4), shall be included.
(3) For all doors, projections not more than 3½ in. (90 mm) at each side of the doorway, at a height of not more than 38 in. (965 mm), shall not be considered a reduction in egress capacity width.
(4) For swinging doors, egress capacity width shall be measured between the face of the door and the stop.

11.2.1.2.2 Clear Width. Clear width shall be measured as follows:

(1) Clear width shall be measured at the narrowest point in the door opening.
(2) For swinging doors, clear width shall be measured between the face of the door and the stop.
(3) Clear width shall be measured without subtracting for the obstructions permitted by 11.2.1.2.3.2 and 11.2.1.2.3.3.

11.2.1.2.3* Measurement.

11.2.1.2.3.1 For purposes of determining minimum door width, the clear width shall be used, unless door leaf width is specified.

11.2.1.2.3.2 For swinging doors, projections of not more than 4 in. (100 mm) into the doorway width on the hinge side shall not be considered reductions in width, provided that such projections are for purposes of accommodating panic hardware or fire exit hardware and are located not less than 34 in. (865 mm) above the floor.

11.2.1.2.3.3 Projections exceeding 6 ft 8 in. (2030 mm) above the floor shall not be considered reductions in width.

11.2.1.2.4 Minimum Door Width. Door openings in means of egress shall be not less than 32 in. (810 mm) in clear width, unless one of the following conditions exists:

(1) Where a pair of doors is provided, not less than one of the doors shall provide not less than a 32 in. (810 mm) clear width opening.
(2) Exit access doors serving a room not exceeding 70 ft^2 (6.5 m^2) and not required to be accessible to persons with severe mobility impairments shall be not less than 24 in. (61 cm) in door leaf width.
(3) Doors serving a building or portion thereof not required to be accessible to persons with severe mobility impairments shall be permitted to be 28 in. (710 mm) in door leaf width.

Copyright National Fire Protection Association
Provided by IHS under license with NFPA
No reproduction or networking permitted without license from IHS
Not for Resale

(4) Doors in detention and correctional occupancies, as otherwise permitted in 21.2.11, shall not be required to comply with 11.2.1.2.4.
(5) Interior doors in dwelling units, as otherwise permitted in 22.2.4, shall not be required to comply with 11.2.1.2.4.
(6) A power-operated door leaf located within a two-leaf opening shall be exempt from the minimum 32 in. (810 mm) single-leaf requirement in accordance with 11.2.1.9.1.6.
(7) Revolving doors, as provided in 11.2.1.10, shall be exempt from the minimum 32 in. (810 mm) width requirement.
(8)*Where a single door is provided for discharge from a stairway required to comply with 11.2.2.2.1.1(B) and such door serves as the sole means of exit discharge from such stairway, the clear width of the door opening, measured in accordance with 11.2.1.2.2, shall be not less than two-thirds the nominal width of the stairway.

11.2.1.3 Floor Level.

11.2.1.3.1 The elevation of the floor surfaces on both sides of a door shall not vary by more than ½ in. (13 mm), unless otherwise permitted by 11.2.1.3.5 or 11.2.1.3.6.

11.2.1.3.2 The elevation of the floor surfaces required by 11.2.1.3.1 shall be maintained on both sides of the doorway for a distance not less than the width of the widest leaf.

11.2.1.3.3 Thresholds at doorways shall not exceed ½ in. (13 mm) in height.

11.2.1.3.4 Raised thresholds and floor level changes in excess of ¼ in. (6.3 mm) at doorways shall be bevelled with a slope not steeper than 1 in 2.

11.2.1.3.5 In one- and two-family dwellings where the door discharges to the outside or to an exterior exit access, the floor level outside the door shall be permitted to be one step lower than the inside, but shall not be in excess of 8 in. (205 mm) lower.

11.2.1.3.6 Where an exterior door serves an exterior balcony contained within a dwelling unit, the floor level outside the door shall be permitted to be one step lower than the inside, but shall not be in excess of 8 in. (205 mm) lower.

11.2.1.3.7 Within a dwelling unit, a door at the top of a stair shall be permitted to open directly at a stair, provided that the door does not swing over the stair and the door serves an area with an occupant load of fewer than 50 persons.

11.2.1.4 Swing and Force to Open.

11.2.1.4.1* Any door in a means of egress shall be of the side-hinged or pivoted-swinging type. The door shall be designed and installed so that it is capable of swinging from any position to the full required width of the opening in which it is installed, unless otherwise specified in 11.2.1.4.1.1 through 11.2.1.4.1.7.

11.2.1.4.1.1 The requirements of 11.2.1.4.1 shall not apply to sliding doors in detention and correctional occupancies, as provided in 21.2.11.

11.2.1.4.1.2 The requirements of 11.2.1.4.1 shall not apply to doors in dwelling units, as provided in 22.2.4.

11.2.1.4.1.3 Where permitted in Chapters 16 through 31, horizontal-sliding or vertical-rolling security grilles or doors that are part of the required means of egress shall be permitted, provided that the following criteria are met:

(1) Such grilles or doors shall remain secured in the full open position during the period of occupancy by the general public.
(2) On or adjacent to the door, there shall be a readily visible, durable sign in letters at least 1 in. (25 mm) high on a contrasting background that reads as follows: THIS DOOR TO REMAIN OPEN WHEN THE BUILDING IS OCCUPIED.
(3) Doors or grilles shall not be brought to the closed position when the space is occupied.
(4) Doors or grilles shall be operable from within the space without the use of any special knowledge or effort.
(5) Where two or more means of egress are required, not more than half of the means of egress shall be equipped with horizontal-sliding or vertical-rolling doors, or horizontal-sliding or vertical-rolling grilles.

11.2.1.4.1.4 Horizontal-sliding doors complying with 11.2.1.14 shall be permitted.

11.2.1.4.1.5 Horizontal-sliding doors serving a room or area with an occupant load of fewer than 10 in health care occupancies shall be exempt from the requirements of 11.2.1.4.1, as provided in Chapter 19.

11.2.1.4.1.6 Doors to private garages, business areas, industrial areas, and storage areas with an occupant load not exceeding 10, where such private garages, business areas, industrial areas, and storage areas contain low or ordinary hazard contents, shall be exempt from the requirements of 11.2.1.4.1.

11.2.1.4.1.7 Revolving doors complying with 11.2.1.10 shall be permitted.

11.2.1.4.2 Side-hinged or pivoted-swinging doors in the required means of egress shall swing in the direction of egress travel where any of the following conditions exist:

(1) The doors shall serve an area with an occupant load of 50 or more.
(2) The doors shall be used in an exit enclosure.
(3) The requirement of 11.2.1.4.2(2) shall not apply to doors from individual dwelling units that open directly into an exit enclosure.
(4) The doors shall serve a high hazard contents area.

11.2.1.4.3* During its swing, any door in a means of egress shall leave not less than one-half of the required width of an aisle, corridor, passageway, or landing unobstructed and shall not project more than 7 in. (180 mm) into the required width of an aisle, corridor, passageway, or landing when fully open. Doors shall not open directly onto a stair without a landing. The landing shall have a width not less than the width of the door. *(See 11.2.1.3.)*

11.2.1.4.4 The forces required to fully open any door manually in a means of egress shall not be more than 15 lbf (67 N) to release the latch, 30 lbf (133 N) to set the door in motion, and 15 lbf (67 N) to open the door to the minimum required width, unless otherwise specified in 11.2.1.4.4.2 through 11.2.1.4.4.4.

11.2.1.4.4.1 The forces specified in 11.2.1.4.4 shall be applied at the latch stile.

11.2.1.4.4.2 Opening forces for interior side-hinged or pivoted-swinging doors without closers shall be not more than 5 lbf (22 N).

--`,,```,,,,````-`-`,,`,,`,`,,`---
Copyright National Fire Protection Association
Provided by IHS under license with NFPA
No reproduction or networking permitted without license from IHS
Not for Resale

11.2.1.4.4.3 The opening forces for horizontal-sliding doors in detention and correctional occupancies shall be as provided in 21.2.11.

11.2.1.4.4.4 The opening forces for power-operated doors shall be as provided in 11.2.1.9.

11.2.1.4.5 Screen doors and storm doors used in a means of egress shall be subject to the requirements for direction of swing that are applicable to other doors used in a means of egress.

11.2.1.5 Locks, Latches, and Alarm Devices.

11.2.1.5.1 Doors shall be arranged to be opened readily from the egress side whenever the building is occupied.

11.2.1.5.2 Locks, if provided, shall not require the use of a key, a tool, or special knowledge or effort for operation from the egress side.

11.2.1.5.3 The requirements of 11.2.1.5.1 and 11.2.1.5.2 shall not apply where otherwise provided in Chapters 19 through 21.

11.2.1.5.4* A latch or other fastening device on a door shall be provided with a releasing device that has an obvious method of operation and that is readily operated under all lighting conditions. The releasing mechanism for any latch shall be located not less than 34 in. (865 mm), and not more than 48 in. (1220 mm), above the finished floor. Doors shall be operable with not more than one releasing operation.

11.2.1.5.5 Exterior doors shall be permitted to have key-operated locks from the egress side, provided that the following criteria are met:

(1) The alternative specified in 11.2.1.5.5 is permitted in Chapters 16 through 31 for the specific occupancy.
(2) A readily visible, durable sign in letters not less than 1 in. (25 mm) high on a contrasting background that reads as follows is located on or adjacent to the door: THIS DOOR TO REMAIN UNLOCKED WHEN THE BUILDING IS OCCUPIED.
(3) The locking device is a type that is readily distinguishable as locked.
(4) A key is immediately available to any occupant inside the building when it is locked.

11.2.1.5.6 The alternative provision of 11.2.1.5.5 shall be permitted to be revoked by the authority having jurisdiction for cause.

11.2.1.5.7 Where permitted in Chapters 16 through 31, key operation shall be permitted, provided that the key cannot be removed when the door is locked from the side from which egress is to be made.

11.2.1.5.8* Every door in a stair enclosure serving more than four stories, unless permitted by 11.2.1.5.8.2, shall meet one of the following criteria:

(1) Re-entry from the stair enclosure to the interior of the building shall be provided.
(2) An automatic release that is actuated with the initiation of the building fire alarm system shall be provided to unlock all stair enclosure doors to allow re-entry.
(3) Selected re-entry shall be provided in accordance with 11.2.1.5.8.1.

11.2.1.5.8.1 Doors on stair enclosures shall be permitted to be equipped with hardware that prevents re-entry into the interior of the building, provided that the following criteria are met:

(1) There shall be not less than two levels where it is possible to leave the stair enclosure to access another exit.
(2) There shall be not more than four stories intervening between stories where it is possible to leave the stair enclosure to access another exit.
(3) Re-entry shall be possible on the top, or next to top, story that allows access to another exit.
(4) Doors allowing re-entry shall be identified as such on the stair side of the door.
(5) Doors not allowing re-entry shall be provided with a sign on the stair side indicating the location of the nearest door, in each direction of travel, that allows re-entry or exit.

11.2.1.5.8.2 The requirement of 11.2.1.5.8 shall not apply to the following:

(1) Stair enclosures serving a building permitted to have a single exit in accordance with Chapters 16 through 31
(2) Stair enclosures in health care occupancies where otherwise provided in Chapter 19
(3) Stair enclosures in detention and correctional occupancies where otherwise provided in Chapter 21

11.2.1.5.9 If a stair enclosure allows access to the roof of the building, the door to the roof either shall be kept locked or shall allow re-entry from the roof.

11.2.1.5.10 A latch or other fastening device on a door shall be provided with a releasing device having an obvious method of operation and that is readily operated under all lighting conditions.

11.2.1.5.10.1 The releasing mechanism for any latch shall be located not less than 34 in. (865 mm), and not more than 48 in. (1220 mm), above the finished floor.

11.2.1.5.10.2 The releasing mechanism shall open the door with not more than one releasing operation, unless otherwise specified in 11.2.1.5.10.3.

11.2.1.5.10.3 Egress doors from individual living units and guest rooms of residential occupancies shall be permitted to be provided with devices, including automatic latching devices, that require not more than one additional releasing operation, provided that such device is operable from the inside without the use of a key or tool and is mounted at a height not exceeding 48 in. (1220 mm) above the finished floor.

11.2.1.5.11 Where pairs of doors are required in a means of egress, one of the following criteria shall be met:

(1) Each leaf of the pair shall be provided with a releasing device that does not depend on the release of one door before the other.
(2) Approved automatic flush bolts shall be used and arranged such that the following criteria are met:
    (a) The door leaf equipped with the automatic flush bolts shall have no door knob or surface-mounted hardware.
    (b) Unlatching of any leaf shall not require more than one operation.

11.2.1.5.12* Devices shall not be installed in connection with any door on which panic hardware or fire exit hardware is required where such devices prevent or are intended to

Copyright National Fire Protection Association
Provided by IHS under license with NFPA
No reproduction or networking permitted without license from IHS
Not for Resale

prevent the free use of the door for purposes of egress, unless otherwise provided in 11.2.1.6.

11.2.1.6 Special Locking Arrangements.

11.2.1.6.1 Delayed-Egress Locks. Approved, listed, delayed-egress locks shall be permitted to be installed on doors serving low and ordinary hazard contents in buildings protected throughout by an approved, supervised automatic fire detection system in accordance with Section 55.2, or an approved, electrically supervised automatic sprinkler system in accordance with Section 55.3, and where permitted in Chapters 16 through 31, provided that the criteria of 11.2.1.6.1.1 through 11.2.1.6.1.7 are met.

11.2.1.6.1.1 The provisions of 11.2.1.6.2 for access-controlled egress doors shall not apply to doors with delayed-egress locks.

11.2.1.6.1.2 The doors shall unlock upon actuation of an approved, electrically supervised automatic sprinkler system installed in accordance with Section 55.3, or upon the actuation of any heat detector or not more than two smoke detectors of an approved, supervised automatic fire detection system installed in accordance with Section 55.2.

11.2.1.6.1.3 The doors shall unlock upon loss of power controlling the lock or locking mechanism.

11.2.1.6.1.4 An irreversible process shall release the lock within 15 seconds upon application of a force to the release device required in 11.2.1.5.10 that shall not be required to exceed 15 lbf (67 N) nor be required to be continuously applied for more than 3 seconds. The initiation of the release process shall activate an audible signal in the vicinity of the door. Once the door lock has been released by the application of force to the releasing device, relocking shall be by manual means only.

11.2.1.6.1.5 Where approved by the authority having jurisdiction, a delay not exceeding 30 seconds shall be permitted.

11.2.1.6.1.6* On the door adjacent to the release device, there shall be a special sign in letters at least 1 in. (25 mm) high that complies with 11.10.8.1 and 11.10.8.2 and reads as follows:

PUSH UNTIL ALARM SOUNDS

DOOR CAN BE OPENED IN 15 SECONDS

11.2.1.6.1.7 Emergency lighting shall be provided in the area of the door.

11.2.1.6.2* Access-Controlled Egress Doors. Where permitted in Chapters 16 through 30, doors in the means of egress shall be permitted to be equipped with an approved entrance and egress access control system, provided that all the following criteria are met:

(1) A sensor shall be provided on the egress side and arranged to detect an occupant approaching doors, and the doors shall be arranged to unlock in the direction of egress upon detection of an approaching occupant or loss of power to the sensor.
(2) Loss of power to the part of the access control system that locks the doors shall automatically unlock the doors in the direction of egress.
(3) The doors shall be arranged to unlock in the direction of egress from a manual release device located 40 in. to 48 in. (1015 mm to 1220 mm) vertically above the floor and within 60 in. (1525 mm) of the secured doors.
(4) The manual release device specified in 11.2.1.6.2(3) shall be readily accessible and clearly identified by a special sign that complies with 11.10.8.1 and 11.10.8.2 and reads as follows: PUSH TO EXIT.
(5) When operated, the manual release device specified in 11.2.1.6.2(3) shall result in direct interruption of power to the lock—independent of the access control system electronics—and the doors shall remain unlocked for not less than 30 seconds.
(6) Activation of the building fire protection signaling system, if provided, shall automatically unlock the doors in the direction of egress, and the doors shall remain unlocked until the fire protection signaling system has been manually reset.
(7) The activation of manual fire alarm boxes that activate the building fire protection signaling system specified in 11.2.1.6.2(6) shall not be required to unlock the doors.
(8) Activation of the building automatic sprinkler or fire detection system, if provided, shall automatically unlock the doors in the direction of egress, and the doors shall remain unlocked until the automatic sprinkler system or fire-protective signaling system has been manually reset.

11.2.1.7 Panic Hardware and Fire Exit Hardware.

11.2.1.7.1 Where a door is required to be equipped with panic hardware or fire exit hardware, such hardware shall meet the following criteria:

(1) It shall consist of a cross bar or push pad, the actuating portion of which extends across not less than one-half of the width of the door leaf.
(2) It shall be mounted not less than 34 in. (865 mm), nor more than 48 in. (1220 mm), above the floor.
(3) It shall be constructed so that a horizontal force not to exceed 15 lbf (67 N) actuates the cross bar or push pad and latches.

11.2.1.7.2 Only approved panic hardware shall be used on doors that are not fire doors. Only approved fire exit hardware shall be used on fire doors.

11.2.1.7.3 Required panic hardware and fire exit hardware, in other than detention and correctional occupancies as otherwise provided in 21.2.11, shall not be equipped with any locking device, set screw, or other arrangement that prevents the release of the latch when pressure is applied to the releasing device.

11.2.1.7.4 Devices that hold the latch in the retracted position shall be prohibited on fire exit hardware, unless listed and approved for that purpose.

11.2.1.8 Self-Closing Devices.

11.2.1.8.1* A door normally required to be kept closed shall not be secured in the open position at any time and shall be self-closing or automatic-closing in accordance with 11.2.1.8.2, unless otherwise permitted by 11.2.1.8.3.

11.2.1.8.2 In any building of low or ordinary hazard contents, as defined in 6.3.2, or where approved by the authority having jurisdiction, doors shall be permitted to be automatic-closing, provided that the following criteria are met:

(1) Upon release of the hold-open mechanism, the door becomes self-closing.
(2) The release device is designed so that the door instantly releases manually and, upon release, becomes self-closing, or the door can be readily closed.

Copyright National Fire Protection Association
Provided by IHS under license with NFPA
No reproduction or networking permitted without license from IHS
Not for Resale

(3) The automatic releasing mechanism or medium is activated by the operation of approved smoke detectors installed in accordance with the requirements for smoke detectors for door release service in *NFPA 72, National Fire Alarm Code*.
(4) Upon loss of power to the hold-open device, the hold-open mechanism is released, and the door becomes self-closing.
(5) The release by means of smoke detection of one door in a stair enclosure results in closing all doors serving that stair.

11.2.1.8.3 The elevator car doors and the associated hoistway enclosure doors at the floor level designated for recall in accordance with the requirements of Section 54.2 shall be permitted to remain open during Phase I Emergency Recall Operation.

11.2.1.9* Powered Doors.

11.2.1.9.1* General. Where means of egress doors are operated by power upon the approach of a person, or are provided with power-assisted manual operation, the design shall be such that, in the event of power failure, the doors open manually to allow egress travel or close when necessary to safeguard the means of egress.

11.2.1.9.1.1 The forces required to manually open the doors specified in 11.2.1.9.1 shall not exceed those required in 11.2.1.4.4, except that the force required to set the door in motion shall not exceed 50 lbf (222 N).

11.2.1.9.1.2 The door shall be designed and installed so that, when a force is applied to the door on the side from which egress is made, it shall be capable of swinging from any position to provide full use of the required width of the opening in which it is installed. *(See 11.2.1.4.)*

11.2.1.9.1.3 On the egress side of each door, there shall be a special sign that complies with 11.10.8.1 and 11.10.8.2 and reads as follows:

IN EMERGENCY, PUSH TO OPEN

11.2.1.9.1.4 The sign required by 11.2.1.9.1.3 shall be in letters not less than 1 in. (25 mm) high on a contrasting background.

11.2.1.9.1.5 Sliding power-operated doors in exit access serving an occupant load of fewer than 50 that manually open in the direction of door travel, with forces not exceeding those required in 11.2.1.4.4, shall not be required to have a swing-out feature required by 11.2.1.9.1.2. The required sign shall read as follows:

IN EMERGENCY, SLIDE TO OPEN

11.2.1.9.1.6 In the emergency breakout mode, a door leaf located within a two-leaf opening shall be exempt from the minimum 32 in. (810 mm) single-leaf requirement of 11.2.1.2.4, provided that the clear width of the single leaf is not less than 30 in. (760 mm).

11.2.1.9.1.7 For a biparting sliding door in the emergency breakout mode, a door leaf located within a multiple-leaf opening shall be exempt from the minimum 32 in. (810 mm) single-leaf requirement of 11.2.1.2.4 if a clear opening of not less than 32 in. (810 mm) is provided by all leafs broken out.

11.2.1.9.1.8 Doors complying with 11.2.1.14 shall be permitted to be used.

11.2.1.9.1.9 The requirements of 11.2.1.9.1 through 11.2.1.9.8 shall not apply in detention and correctional occupancies where otherwise provided in 21.2.11.

11.2.1.9.2 Doors Required to Be Self-Closing. Where doors are required to be self-closing and are operated by power upon the approach of a person, or are provided with power-assisted manual operation, they shall be permitted in the means of egress under the following conditions:

(1) The doors can be opened manually in accordance with 11.2.1.9.1 to allow egress travel in the event of power failure.
(2) New doors remain in the closed position, unless actuated or opened manually.
(3) When actuated, new doors remain open for not more than 30 seconds.
(4) Doors held open for any period of time close—and the power-assist mechanism ceases to function—upon operation of approved smoke detectors installed in such a way as to detect smoke on either side of the door opening in accordance with the provisions of *NFPA 72*.
(5) Doors required to be self-latching are either self-latching or become self-latching upon operation of approved smoke detectors per 11.2.1.9.2(4).
(6) New power-assisted swinging doors comply with BHMA/ANSI A156.19, *American National Standard for Power Assist and Low Energy Power Operated Doors*.

11.2.1.10 Revolving Doors.

11.2.1.10.1 Revolving doors shall comply with the following:

(1) Revolving doors shall be capable of being collapsed into a book-fold position.
(2) When revolving doors are collapsed into the book-fold position, the parallel egress paths formed shall provide an aggregate width of 36 in. (915 mm).
(3) Revolving doors shall not be used within 10 ft (3050 mm) of the foot or the top of stairs or escalators.
(4) Under all conditions, there shall be a dispersal area acceptable to the authority having jurisdiction between the stairs or escalators and revolving doors.
(5) The revolutions per minute (rpm) of revolving doors shall not exceed the values in Table 11.2.1.10.1.
(6) Each revolving door shall have a conforming side-hinged swinging door in the same wall as the revolving door and within 10 ft (3050 mm) of the revolving door.

Table 11.2.1.10.1 Revolving Door Maximum Speed

Inside Diameter		Power Driven–Type Speed Control (rpm)	Manual-Type Speed Control (rpm)
ft/in.	mm		
6 ft 6 in.	1980	11	12
7 ft	2135	10	11
7 ft 6 in.	2285	9	11
8 ft	2440	9	10
8 ft 6 in.	2590	8	9
9 ft	2745	8	9
9 ft 6 in.	2895	7	8
10 ft	3050	7	8

Copyright National Fire Protection Association
Provided by IHS under license with NFPA
No reproduction or networking permitted without license from IHS
Not for Resale

(7) Revolving doors shall be permitted without the adjacent swinging doors required by 11.2.1.10.1(6) for street floor elevator lobbies, provided that no stairways or doors from other parts of the building discharge through the lobby and the lobby has no occupancy other than as a means of travel between the elevators and street.

11.2.1.10.2 Where permitted in Chapters 16 through 30, revolving doors shall be permitted as a component in a means of egress, provided that the following criteria are met:

(1) Revolving doors shall not be given credit for more than 50 percent of the required egress capacity.
(2) Each revolving door shall be credited with not more than a 50-person capacity, or, if of not less than a 9 ft (2745 mm) diameter, revolving doors shall be permitted egress capacity based on the clear opening width provided when collapsed into a book-fold position.
(3) Revolving doors shall be capable of being collapsed into a book-fold position when a force not exceeding 130 lbf (580 N) is applied to the wings within 3 in. (75 mm) of the outer edge.

11.2.1.10.3 Revolving doors not used as a component of a means of egress shall have a collapsing force not exceeding 180 lbf (800 N).

11.2.1.10.4 The requirement of 11.2.1.10.3 shall not apply to revolving doors, provided that the collapsing force is reduced to a force not to exceed 130 lbf (580 N) under the following conditions:

(1) Power failure, or removal of power to the device holding the wings in position
(2) Actuation of the automatic sprinkler system, where such a system is provided
(3) Actuation of a smoke detection system that is installed to provide coverage in all areas within the building that are within 75 ft (23 m) of the revolving doors
(4) Actuation of a clearly identified manual control switch in an approved location that reduces the holding force to a force not to exceed 130 lbf (580 N)

11.2.1.11 Turnstiles.

11.2.1.11.1 Turnstiles or similar devices that restrict travel to one direction or are used to collect fares or admission charges shall not be placed so as to obstruct any required means of egress, unless otherwise specified in 11.2.1.11.1.1 and 11.2.1.11.1.2.

11.2.1.11.1.1 Approved turnstiles not exceeding 39 in. (990 mm) in height that turn freely in the direction of egress travel shall be permitted where revolving doors are permitted in Chapters 16 through 31.

11.2.1.11.1.2 Where turnstiles are approved by the authority having jurisdiction and permitted in Chapters 16 through 31, each turnstile shall be credited for a 50-person capacity, provided that such turnstiles meet the following criteria:

(1) They freewheel in the egress direction when primary power is lost, and they freewheel in the direction of egress travel upon manual release by an employee assigned in the area.
(2) They are not given credit for more than 50 percent of the required egress width.
(3) They are not in excess of 39 in. (990 mm) in height and have a clear width of not less than 16½ in. (420 mm).

11.2.1.11.2 Turnstiles exceeding 39 in. (990 mm) in height shall meet the requirements for revolving doors in 11.2.1.10.

11.2.1.11.3 Turnstiles located in, or furnishing access to, required exits shall provide not less than 16½ in. (420 mm) clear width at and below a height of 39 in. (990 mm) and not less than 22 in. (560 mm) clear width at heights above 39 in. (990 mm).

11.2.1.12 Doors in Folding Partitions. Where permanently mounted folding or movable partitions divide a room into smaller spaces, a swinging door or open doorway shall be provided as an exit access from each such space, unless otherwise provided in 11.2.1.12.1 and 11.2.1.12.2.

11.2.1.12.1 A door or opening in the folding partition shall not be required, provided that the following criteria are met:

(1) The subdivided space is not used by more than 20 persons at any time.
(2) The use of the space is under adult supervision.
(3) The partitions are arranged so that they do not extend across any aisle or corridor used as an exit access to the required exits from the story.
(4) The partitions conform to the interior finish and other requirements of this *Code*.
(5) The partitions are of an approved type, have a simple method of release, and are capable of being opened quickly and easily by experienced persons in case of emergency.

11.2.1.12.2 Where a subdivided space is provided with not less than two means of egress, a swinging door in the folding partition shall not be required, and one such means of egress shall be permitted to be equipped with a horizontal-sliding door complying with 11.2.1.14.

11.2.1.13 Balanced Doors. If panic hardware is installed on balanced doors, the panic hardware shall be of the push-pad type, and the pad shall not extend more than approximately one-half the width of the door, measured from the latch side. *[See 11.2.1.7.1(1).]*

11.2.1.14 Horizontal-Sliding Doors. Horizontal-sliding doors used in accordance with 11.2.1.4.1.4 shall meet the following criteria:

(1) The door is readily operable from either side without special knowledge or effort.
(2) The force that, when applied to the operating device in the direction of egress, is required to operate the door is not more than 15 lbf (67 N).
(3) The force required to operate the door in the direction of door travel is not more than 30 lbf (133 N) to set the door in motion and is not more than 15 lbf (67 N) to close the door or open it to the minimum required width.
(4) The door is operable with a force of not more than 50 lbf (222 N) when a force of 250 lbf (1100 N) is applied perpendicularly to the door adjacent to the operating device.
(5) The door assembly complies with the fire protection rating and, where rated, is self-closing or automatic-closing by means of smoke detection in accordance with 11.2.1.8, and is installed in accordance with NFPA 80, *Standard for Fire Doors and Fire Windows*.

11.2.2 Stairs.

11.2.2.1 General. Stairs used as a component in the means of egress, other than aisle stairs in assembly occupancies as otherwise provided in Chapter 16, shall conform to the general

Copyright National Fire Protection Association
Provided by IHS under license with NFPA
No reproduction or networking permitted without license from IHS
Not for Resale

requirements of Section 11.1 and to the special requirements of 11.2.2.

11.2.2.2 Dimensional Criteria.

11.2.2.2.1 Standard Stairs. Dimensional criteria for stairs, other than stairs for industrial equipment access as otherwise provided in 29.2.5.3, shall be in accordance with Table 11.2.2.2.1.

Table 11.2.2.2.1 Stairs

Feature	Dimensional Criteria
Minimum width	See 11.2.2.2.1.1
Maximum height of risers	7 in. (180 mm)
Minimum height of risers	4 in. (100 mm)
Minimum tread depth	11 in. (280 mm)
Minimum headroom	6 ft 8 in. (2030 mm)
Maximum height between landings	12 ft (3660 mm)
Landing	See 11.2.1.3, 11.2.1.4.3, and 11.2.2.3.2.

11.2.2.2.1.1* Minimum Stair Width.

(A) Where the total occupant load of all stories served by the stair is fewer than 50, the minimum width clear of all obstructions, except projections not more than 4½ in. (114 mm) at or below handrail height on each side, shall be 36 in. (915 mm).

(B)* Where a stair serves an occupant load exceeding that permitted by 11.2.2.2.1.1(A), the minimum width clear of all obstructions, except projections not more than 4½ in. (114 mm) at or below handrail height on each side, shall be in accordance with Table 11.2.2.2.1.1(B) and the requirements of 11.2.2.2.1.1(C), (D), and (E).

Table 11.2.2.2.1.1(B) Stair Width

	Width	
Total Cumulative Occupant Load Assigned to the Stair	**in.**	**mm**
<2000	44	1120
≥2000	56	1420

(C) The total cumulative occupant load assigned to a particular stair shall be that stair's prorated share of the total occupant load, as stipulated in 11.2.2.2.1.1(D) and (E), calculated in proportion to the stair width.

(D) For downward egress travel, stair width shall be based on the total number of occupants from stories above the level where the width is measured.

(E) For upward egress travel, stair width shall be based on the total number of occupants from stories below the level where the width is measured.

(F) The clear width of door openings discharging from stairways required to comply with 11.2.2.2.1.1(B) shall be in accordance with 11.2.1.2.4(8).

11.2.2.2.1.2 Reserved.

11.2.2.2.2 Curved Stairs. Curved stairs shall be permitted as a component in a means of egress, provided that the depth of tread is not less than 11 in. (280 mm) at a point 12 in. (305 mm) from the narrower end of the tread and the smallest radius is not less than twice the stair width.

11.2.2.2.3 Spiral Stairs.

11.2.2.2.3.1 Where specifically permitted for individual occupancies by Chapters 16 through 30, spiral stairs shall be permitted as a component in a means of egress in accordance with 11.2.2.2.3.2 and 11.2.2.2.3.3.

11.2.2.2.3.2 Spiral stairs shall be permitted, provided that the following criteria are met:

(1) Riser heights shall not exceed 7 in. (180 mm).
(2) The stairway shall have a tread depth of not less than 11 in. (280 mm) for a portion of the stairway width sufficient to provide egress capacity for the occupant load served in accordance with 11.3.3.1.
(3) At the outer side of the stairway, an additional 10½ in. (265 mm) of width shall be provided clear to the other handrail, and this width shall not be included as part of the required egress capacity.
(4) Handrails complying with 11.2.2.4 shall be provided on both sides of the spiral stairway.
(5) The inner handrail shall be located within 24 in. (610 mm), measured horizontally, of the point where a tread depth of not less than 11 in. (280 mm) is provided.
(6) The turn of the stairway shall be such that descending users have the outer handrail at their right side.

11.2.2.2.3.3 Where the occupant load served does not exceed three, spiral stairs shall be permitted, provided that the following criteria are met:

(1) The clear width of the stairs shall be not less than 26 in. (660 mm).
(2) The height of risers shall not exceed 9½ in. (240 mm).
(3) The headroom shall be not less than 6 ft 6 in. (1980 mm).
(4) Treads shall have a depth not less than 7½ in. (190 mm) at a point 12 in. (305 mm) from the narrower edge.
(5) All treads shall be identical.
(6) Handrails shall be provided on both sides of the stairway.

11.2.2.2.4* Winders. Where specified in Chapters 16 through 30, winders shall be permitted in stairs. Winders shall have a tread depth of not less than 6 in. (150 mm) and a tread depth of not less than 11 in. (280 mm) at a point 12 in. (305 mm) from the narrowest edge.

11.2.2.3 Stair Details.

11.2.2.3.1 Construction.

11.2.2.3.1.1 All stairs serving as required means of egress shall be of permanent fixed construction, unless they are stairs serving seating that is designed to be repositioned in accordance with 16.2.2.3.1.

11.2.2.3.1.2 All components of a stairway, including platforms and landings, shall be constructed of materials consistent with the types permitted for floor construction, based on the type of construction of the building, except that wood handrails shall be permitted for all types of construction. All walking surfaces of a stairway shall be capable of supporting the loads specified in Chapter 35.

Copyright National Fire Protection Association
Provided by IHS under license with NFPA
No reproduction or networking permitted without license from IHS
Not for Resale

11.2.2.3.2 Landings.

11.2.2.3.2.1 Stairs shall have landings at door openings, except as permitted in 11.2.2.3.2.5.

11.2.2.3.2.2 Stairs and intermediate landings shall continue with no decrease in width along the direction of egress travel.

11.2.2.3.2.3 In new buildings, every landing shall have a dimension measured in the direction of travel that is not less than the width of the stair, unless otherwise provided in 11.2.2.3.2.4.

11.2.2.3.2.4 Landings shall not be required to exceed 48 in. (1220 mm) in the direction of travel, provided that the stair has a straight run.

11.2.2.3.2.5 Within a dwelling unit, a door at the top of a stair shall be permitted to open directly at a stair, provided that the door does not swing over the stair and the door serves an area with an occupant load of fewer than 50 persons.

11.2.2.3.3 Tread and Landing Surfaces.

11.2.2.3.3.1 Stair treads and landings shall be solid, without perforations, unless otherwise permitted by 11.2.2.3.3.4.

11.2.2.3.3.2* Stair treads and landing shall be free of projections or lips that could trip stair users.

11.2.2.3.3.3 If not vertical, risers shall be permitted to slope under the tread at an angle not to exceed 30 degrees from vertical, provided that the permitted projection of the nosing does not exceed 1½ in. (38 mm).

11.2.2.3.3.4 The requirement of 11.2.2.3.3.1 shall not apply to noncombustible grated stair treads and landings in the following occupancies:

(1) Assembly occupancies as otherwise provided in 16.2.2.3.2
(2) Detention and correctional occupancies as otherwise provided in 21.2.2.3.1
(3) Industrial occupancies as otherwise provided in 29.2.2.3.1

11.2.2.3.4* Tread and Landing Slope. The tread and landing slope shall not exceed ¼ in./ft (21 mm/m) (a slope of 1 in 48).

11.2.2.3.5* Riser Height and Tread Depth. Riser height shall be measured as the vertical distance between tread nosings. Tread depth shall be measured horizontally between the vertical planes of the foremost projection of adjacent treads, and at a right angle to the tread's leading edge, but shall not include bevelled or rounded tread surfaces that slope more than 20 degrees (a slope of 1 in 2.75). At tread nosings, such bevelling or rounding shall not exceed ½ in. (13 mm) in horizontal dimension.

11.2.2.3.6 Dimensional Uniformity.

11.2.2.3.6.1 Variation in excess of 3⁄16 in. (4.8 mm) in the depth of adjacent treads or in the height of adjacent risers shall be prohibited, unless otherwise permitted in 11.2.2.3.6.3.

11.2.2.3.6.2 The tolerance between the largest and smallest riser or between the largest and smallest tread shall not exceed ⅜ in. (9.5 mm) in any flight.

11.2.2.3.6.3 Where the bottom riser adjoins a sloping public way, walk, or driveway having an established grade and serving as a landing, the bottom riser shall be permitted to have a variation in height of not more than 1 in. in every 12 in. (25 mm in every 300 mm) of stairway width.

11.2.2.4* Guards and Handrails.

11.2.2.4.1 Handrails.

11.2.2.4.1.1 Stairs and ramps shall have handrails on both sides, unless otherwise permitted in 11.2.2.4.1.6.

11.2.2.4.1.2 In addition, handrails shall be provided within 30 in. (760 mm) of all portions of the required egress width of new stairs.

11.2.2.4.1.3 Where intermediate handrails are provided in accordance with 11.2.2.4.1.2, the minimum clear width between handrails shall be 20 in. (510 mm).

11.2.2.4.1.4 The required egress width shall be provided along the natural path of travel.

11.2.2.4.1.5 If a single step or a ramp is part of a curb that separates a sidewalk from a vehicular way, it shall not be required to have a handrail.

11.2.2.4.1.6 Stairs within dwelling units and within guest rooms, and ramps within dwelling units and guest rooms, shall be permitted to have a handrail on one side only.

11.2.2.4.2* Continuity. Required guards and handrails shall continue for the full length of each flight of stairs. At turns of new stairs, inside handrails shall be continuous between flights at landings.

11.2.2.4.3 Projections. The design of guards and handrails, and the hardware for attaching handrails to guards, balusters, or walls, shall be such that there are no projections that might engage loose clothing. Openings in guards shall be designed to prevent loose clothing from becoming wedged in such openings.

11.2.2.4.4 Direction. For standard stairs, at least one handrail or guard shall be installed at a right angle to the leading edge of the stair treads.

11.2.2.4.5* Handrail Details.

11.2.2.4.5.1* Handrails on stairs and ramps shall have a consistent height of not less than 34 in. (865 mm) and not more than 38 in. (965 mm) above the surface of the stair tread or ramp walking surface, measured vertically to the top of the rail from the leading edge of the stair tread or the ramp walking surface.

11.2.2.4.5.2 The height of required handrails that form part of a guard in stairways not required to be accessible to persons with disabilities shall be permitted to exceed 38 in. (965 mm), but shall not exceed 42 in. (1065 mm), measured vertically to the top of the rail from the leading edge of the tread.

11.2.2.4.5.3 Additional handrails that are lower or higher than the main handrail shall be permitted.

11.2.2.4.5.4 Handrails shall provide a clearance of not less than 2¼ in. (57 mm) between the handrail and the wall to which it is fastened.

11.2.2.4.5.5* Handrails shall include one of the following features:

(1) Circular cross section with an outside diameter of not less than 1¼ in. (32 mm) and not more than 2 in. (51 mm)
(2) Shape that is other than circular with a perimeter dimension of not less than 4 in. (100 mm), but not more than 6¼ in. (160 mm), and with the largest cross-sectional dimension not more than 2¼ in. (57 mm), provided that graspable edges are rounded so as to provide a radius of not less than ⅛ in. (3.2 mm).

Copyright National Fire Protection Association
Provided by IHS under license with NFPA
No reproduction or networking permitted without license from IHS
Not for Resale

11.2.2.4.5.6 Handrails shall be continuously graspable along their entire length.

11.2.2.4.5.7 Handrail brackets or balusters attached to the bottom surface of the handrail shall not be considered to be obstructions to graspability, provided that the following criteria are met:

(1) They do not project horizontally beyond the sides of the handrail within a vertical clearance of 1½ in. (38 mm) of the bottom surface of the handrail.
(2) For each ½ in. (13 mm) of additional handrail perimeter dimension greater than 4 in. (100 mm), the vertical clearance dimension of 1½ in. (38 mm) is permitted to be reduced by ⅛ in. (3.2 mm).
(3) They have edges with a radius of not less than 0.01 in. (0.25 mm).
(4) They obstruct not in excess of 20 percent of the handrail length if the graspable perimeter dimension is less than 5½ in. (140 mm).

11.2.2.4.5.8 Handrail ends shall return to the wall or floor or shall terminate at newel posts.

11.2.2.4.5.9 In other dwelling units, handrails that are not continuous between flights shall extend horizontally, at the required height, not less than 12 in. (305 mm) beyond the top riser and continue to slope for a depth of one tread beyond the bottom riser.

11.2.2.4.5.10 Within dwelling units, the handrail shall extend, at the required height, to at least those points that are directly above the top and bottom risers.

11.2.2.4.6 Guard Details.

11.2.2.4.6.1 The height of guards required in 11.1.8 shall be measured vertically to the top of the guard from the surface adjacent thereto.

11.2.2.4.6.2 Guards, other than guards in assembly occupancies where otherwise provided in 16.2.11, shall be not less than 42 in. (1065 mm) high.

11.2.2.4.6.3* Open guards shall have intermediate rails or an ornamental pattern such that a sphere 4 in. (100 mm) in diameter shall not be capable of passing through any opening up to a height of 34 in. (865 mm), and the following also shall apply:

(1) The triangular openings formed by the riser, tread, and bottom element of a guardrail at the open side of a stair shall be of such size that a sphere 6 in. (150 mm) in diameter shall not be capable of passing through the triangular opening.
(2) In detention and correctional occupancies, in industrial occupancies, and in storage occupancies, the clear distance between intermediate rails, measured at right angles to the rails, shall not exceed 21 in. (535 mm).

11.2.2.5 Enclosure and Protection of Stairs.

11.2.2.5.1 Enclosures. All inside stairs serving as an exit or exit component shall be enclosed in accordance with 11.1.3.2. All other inside stairs shall be protected in accordance with Section 8.12.

11.2.2.5.2* Exposures.

11.2.2.5.2.1 Where nonrated walls or unprotected openings enclose the exterior of a stairway, and the walls or openings are exposed by other parts of the building at an angle of less than 180 degrees, the building enclosure walls within 10 ft (3050 mm) horizontally of the nonrated wall or unprotected opening shall be constructed as required for stairway enclosures, including opening protectives, unless otherwise permitted by 11.2.2.5.2.3 and 11.2.2.5.2.4.

11.2.2.5.2.2 Construction shall extend vertically from the ground to a point 10 ft (3050 mm) above the topmost landing of the stairs or to the roofline, whichever is lower.

11.2.2.5.2.3 The fire resistance rating of the separation extending 10 ft (3050 mm) from the stairs shall not be required to exceed 1 hour where openings have not less than a ¾-hour fire protection rating.

11.2.2.5.2.4 Separation shall not be required between corridors and outside stairs, provided that the following conditions are met:

(1) The building, including corridors and stairs, shall be protected throughout by an approved, electrically supervised automatic sprinkler system in accordance with NFPA 13, *Standard for the Installation of Sprinkler Systems*, or, where applicable, NFPA 13R, *Standard for the Installation of Sprinkler Systems in Residential Occupancies up to and Including Four Stories in Height.*
(2) The corridors shall comply with 11.1.3.1.
(3) The corridors shall be connected on each end to an outside stair complying with 11.2.2.7.
(4) At any location in the corridor where a change in direction exceeding 45 degrees occurs, a clear opening to the exterior of not less than 35 ft^2 (3.25 m^2), located to restrict the accumulation of smoke and toxic gases, or an outside stair shall be provided.

11.2.2.5.3 Usable Space. Enclosed, usable space within an exit enclosure shall be prohibited, including under stairs, unless otherwise permitted by 11.2.2.5.3.2.

11.2.2.5.3.1* Open space within the enclosure shall not be used for any purpose that has the potential to interfere with egress.

11.2.2.5.3.2 Enclosed, usable space shall be permitted under stairs, provided that the following criteria are met:

(1) The space is separated from the stair enclosure by the same fire resistance rating as the exit enclosure.
(2) Entrance to the enclosed, usable space is not from within the stair enclosure. *(See also 11.1.3.2.3.)*

11.2.2.6* Stairway Marking.

11.2.2.6.1 Enclosed stairs serving three or more stories shall comply with 11.2.2.6.1.1 through 11.2.2.6.1.8.

11.2.2.6.1.1 The stairs shall be provided with special signage within the enclosure at each floor landing.

11.2.2.6.1.2 The signage shall indicate the floor level.

11.2.2.6.1.3 The signage shall indicate the terminus of the top and bottom of the stair enclosure.

11.2.2.6.1.4 The signage shall indicate the identification of the stair enclosure.

Copyright National Fire Protection Association
Provided by IHS under license with NFPA
No reproduction or networking permitted without license from IHS
Not for Resale

11.2.2.6.1.5 The signage shall indicate the floor level of, and the direction to, exit discharge.

11.2.2.6.1.6 The signage shall be located inside the enclosure approximately 60 in. (1525 mm) above the floor landing in a position that is visible when the door is in the open or closed position.

11.2.2.6.1.7 The signage shall comply with 11.10.8.1 and 11.10.8.2.

11.2.2.6.1.8 The floor level designation shall also be tactile in accordance with ICC/ANSI A117.1, *American National Standard for Accessible and Usable Buildings and Facilities*.

11.2.2.6.2 Wherever an enclosed stair requires travel in an upward direction to reach the level of exit discharge, special signs with directional indicators showing the direction to the level of exit discharge shall be provided at each floor level landing from which upward direction of travel is required, unless otherwise provided in 11.2.2.6.2.1 and 11.2.2.6.2.2, and the following shall also apply:

(1) Such signage shall comply with 11.10.8.1 and 11.10.8.2.
(2) Such signage shall be visible when the door is in the open or closed position.

11.2.2.6.2.1 The requirement of 11.2.2.6.2 shall not apply where signs required by 11.2.2.6.1 are provided.

11.2.2.6.2.2 The requirement of 11.2.2.6.2 shall not apply to stairs extending not more than one story below the level of exit discharge where the exit discharge is clearly obvious.

11.2.2.6.3 The sign shall be painted or stenciled on the wall or on a separate sign securely attached to the wall.

11.2.2.6.4 The stairway identification letter shall be placed at the top of the sign in minimum 1 in. (25 mm) high lettering in accordance with 11.10.8.2.

11.2.2.6.5 The provision of roof access or lack of roof access shall be designated by the words "roof access" or "no roof access" and placed under the stairway identification letter. Lettering shall be a minimum of 1 in. (25 mm) high and in accordance with 11.10.8.2.

11.2.2.6.6 The floor level shall be placed in the middle of the sign in minimum 5 in. (125 mm) high numbers and in accordance with 11.10.8.2. Mezzanine levels shall have the letter "M" or other appropriate identification letter preceding the floor level number, while basement levels shall have the letter "B" or other appropriate identification letter preceding the floor level number.

11.2.2.6.7 The lower and upper terminus of the stairway shall be placed at the bottom of the sign in minimum 1 in. (25 mm) high letters and in accordance with 11.10.8.2.

11.2.2.6.8* Where new contrasting marking is applied to stairs, such marking shall comply with the following:

(1) The marking shall include a continuous strip as a coating on, or as a material integral with, the full width of the leading edge of each tread.
(2) The marking shall include a continuous strip as a coating on, or as a material integral with, the full width of the leading edge of each landing nosing.
(3) The marking strip width, measured horizontally from the leading vertical edge of the nosing, shall be consistent at all nosings.
(4) The marking strip width shall be 1 in. to 2 in. (25 mm to 51 mm).

11.2.2.7 Special Provisions for Outside Stairs.

11.2.2.7.1 Access. Where approved by the authority having jurisdiction, outside stairs shall be permitted to lead to roofs of other sections of a building or an adjoining building where the construction is fire resistive and there is a continuous and safe means of egress from the roof. *(See also 11.7.6.)*

11.2.2.7.2* Visual Protection. For outside stairs more than three stories in height, an opaque visual obstruction not less than 48 in. (1220 mm) in height shall be provided.

11.2.2.7.3 Separation and Protection of Outside Stairs.

11.2.2.7.3.1 Outside stairs shall be separated from the interior of the building by construction with the fire resistance rating required for enclosed stairs with fixed or self-closing opening protectives, except as follows:

(1) Outside stairs serving an exterior exit access balcony that has two remote outside stairways or ramps shall be permitted to be unprotected.
(2) Outside stairs serving not in excess of two adjacent stories, including the story of exit discharge, shall be permitted to be unprotected where there is a remotely located second exit.
(3) The fire resistance rating of the separation extending 10 ft (3050 mm) from the stairs shall not be required to exceed 1 hour where openings have not less than a ¾-hour fire protection rating.

11.2.2.7.3.2 Wall construction required by 11.2.2.7.3.1 shall extend as follows:

(1) Vertically from the ground to a point 10 ft (3050 m) above the topmost landing of the stairs or to the roofline, whichever is lower
(2) Horizontally for not less than 10 ft (3050 m)

11.2.2.7.4 Protection of Openings. All openings below an outside stair shall be protected with an assembly having not less than a ¾-hour fire protection rating where the following conditions exist:

(1) Where the stair is located in a court, the smallest dimension of which does not exceed one-third its height
(2) Where the stair is located in an alcove having a width that does not exceed one-third its height and a depth that does not exceed one-fourth its height

11.2.2.7.5* Water Accumulation. Outside stairs and landings shall be designed to minimize water accumulation on their surfaces.

11.2.2.7.6 Openness. Outside stairs shall be not less than 50 percent open on one side and shall be arranged to restrict the accumulation of smoke.

11.2.3 Smokeproof Enclosures.

11.2.3.1 General. Where smokeproof enclosures are required in other sections of this *Code*, they shall comply with 11.2.3.

11.2.3.2 Performance Design. An appropriate design method shall be used to provide a system that meets the definition of smokeproof enclosure *(see 3.3.182.2, Smokeproof Enclosure)*. The smokeproof enclosure shall be permitted to be created by using natural ventilation, by using mechanical ventilation incorporating a vestibule, or by pressurizing the enclosure.

Copyright National Fire Protection Association
Provided by IHS under license with NFPA
No reproduction or networking permitted without license from IHS
Not for Resale

11.2.3.3 Enclosure. A smokeproof enclosure shall be enclosed from the highest point to the lowest point by barriers having 2-hour fire resistance ratings. Where a vestibule is used, it shall be within the 2-hour-rated enclosure and shall be considered part of the smokeproof enclosure.

11.2.3.4 Vestibule. Where a vestibule is provided, the doorway into the vestibule shall be protected with an approved fire door assembly having a 1½-hour fire protection rating, and the fire door assembly from the vestibule to the smokeproof enclosure shall have not less than a 20-minute fire protection rating. Doors shall be designed and installed in accordance with NFPA 105 to minimize air leakage in accordance with 11.2.1.1.4 and shall be self-closing or shall be automatic-closing by actuation of a smoke detector within 10 ft (3050 mm) of the vestibule door.

11.2.3.5 Discharge. Every smokeproof enclosure shall discharge into a public way, into a yard or court having direct access to a public way, or into an exit passageway. Such exit passageways shall be without openings other than the entrance from the smokeproof enclosure and the door to the outside yard, court, or public way. The exit passageway shall be separated from the remainder of the building by a 2-hour fire resistance rating.

11.2.3.6 Access. For smokeproof enclosures, other than those consisting of a pressurized stair enclosure complying with 11.2.3.9, access to the smokeproof enclosure shall be by way of a vestibule or by way of an exterior balcony.

11.2.3.7 Natural Ventilation. Smokeproof enclosures using natural ventilation shall comply with 11.2.3.3 and the following:

(1) Where access to the enclosure is by means of an open exterior balcony, the door assembly to the enclosure shall have a 1½-hour fire protection rating and shall be self-closing or shall be automatic-closing by actuation of a smoke detector.
(2) Openings adjacent to the exterior balconies specified in 11.2.3.7(1) shall be protected in accordance with 11.2.2.7.4.
(3) Every vestibule shall have a net area of not less than 16 ft^2(1.5 m^2) of opening in an exterior wall facing an exterior court, yard, or public space not less than 20 ft (6100 mm) in width.
(4) Every vestibule shall have a minimum dimension of not less than the required width of the corridor leading to it and a dimension of not less than 6 ft (1830 mm) in the direction of travel.

11.2.3.8 Mechanical Ventilation. Smokeproof enclosures using mechanical ventilation shall comply with 11.2.3.3 and the following:

(1) Vestibules shall have a dimension of not less than 44 in. (1120 mm) in width and not less than 6 ft (1830 mm) in the direction of travel.
(2) Vestibules shall be provided with not less than one air change per minute, the exhaust shall be 150 percent of the supply, and the following criteria also shall be met:
    (a) Supply air shall enter and exhaust air shall discharge from the vestibule through separate tightly constructed ducts used only for such purposes.
    (b) Supply air shall enter the vestibule within 6 in. (150 mm) of the floor level.
    (c) The top of the exhaust register shall be located not more than 6 in. (150 mm) below the top of the trap and shall be entirely within the smoke trap area.
    (d) Doors, when in the open position, shall not obstruct duct openings.
    (e) Controlling dampers shall be permitted in duct openings if needed to meet the design requirements.
(3) To serve as a smoke and heat trap and to provide an upward-moving air column, the vestibule ceiling shall be not less than 20 in. (510 mm) higher than the door opening into the vestibule, unless such height is permitted to be decreased where justified by engineering design and field testing.
(4) The smokeproof enclosure shall be provided with a dampered relief opening at the top and supplied mechanically with sufficient air to discharge at least 2500 ft^3/min (70.8 m^3/min) through the relief opening while maintaining a positive pressure of not less than 0.10 in. water column (25 Pa) in the enclosure relative to the vestibule with all doors closed.

11.2.3.9 Enclosure Pressurization.

11.2.3.9.1* Smokeproof enclosures using pressurization shall use an approved engineered system with a design pressure difference across the barrier of not less than 0.05 in. water column (12.5 Pa) in sprinklered buildings, or 0.10 in. water column (25 Pa) in nonsprinklered buildings, and shall be capable of maintaining these pressure differences under likely conditions of stack effect or wind. The pressure difference across doors shall not exceed that which allows the door to begin to be opened by a force of 30 lbf (133 N) in accordance with 11.2.1.4.4.

11.2.3.9.2 Equipment and ductwork for pressurization shall be located in accordance with one of the following specifications:

(1) Exterior to the building and directly connected to the enclosure by ductwork enclosed in noncombustible or limited-combustible construction
(2) Within the enclosure with intake and exhaust air vented directly to the outside or through ductwork enclosed by a 2-hour fire resistance–rated separation
(3) Within the building, under the following conditions:
    (a) Where the equipment and ductwork are separated from the remainder of the building, including other mechanical equipment, by a 2-hour fire resistance–rated separation
    (b) Where the building, including the enclosure, is protected throughout by an approved, electrically supervised automatic sprinkler system installed in accordance with Section 55.3, and the equipment and ductwork are separated from the remainder of the building, including other mechanical equipment, by not less than a 1-hour fire resistance–rated separation.

11.2.3.9.3 In all cases specified by 11.2.3.9.2(1) through (3), openings into the required fire resistance–rated separations shall be limited to those needed for maintenance and operation and shall be protected by self-closing fire protection–rated devices.

11.2.3.10 Activation of Mechanical Ventilation and Pressurized Enclosure Systems.

11.2.3.10.1 For both mechanical ventilation and pressurized enclosure systems, the activation of the systems shall be initiated by a smoke detector installed in an approved location

--`,,```,,,,````-`-`,,`,,`,`,,`---

Copyright National Fire Protection Association
Provided by IHS under license with NFPA
No reproduction or networking permitted without license from IHS
Not for Resale

within 10 ft (3050 mm) of the entrance to the smokeproof enclosure.

11.2.3.10.2 The required mechanical systems shall operate upon the activation of the smoke detectors specified in 11.2.3.10.1 and by manual controls accessible to the fire department. The required system also shall be initiated by the following, if provided:

(1) Waterflow signal from a complete automatic sprinkler system
(2) General evacuation alarm signal *(see 55.2.3)*

11.2.3.11 Door Closers. The activation of an automatic-closing device on any door in the smokeproof enclosure shall activate all other automatic-closing devices on doors in the smokeproof enclosure.

11.2.3.12 Emergency Power Supply System (EPSS). A Type 60, Class 2, Level 2, EPSS for mechanical ventilation equipment shall be provided in accordance with NFPA 110, *Standard for Emergency and Standby Power Systems*. The generator shall be located in a room having a minimum 1-hour fire resistance–rated separation from the remainder of the building. The generator shall have a fuel supply not less than that which is adequate to operate the equipment for 2 hours. The transfer switch equipment and the standby panelboard shall be located in a room having a minimum 1-hour fire resistance–rated separation from the remainder of the building and normal electrical equipment.

11.2.3.13 Testing. Before the mechanical equipment is accepted by the authority having jurisdiction, it shall be tested to confirm that the mechanical equipment is operating in compliance with the requirements of 11.2.3. All operating parts of the system shall be tested semiannually by approved personnel, and a log shall be kept of the results.

11.2.4 Horizontal Exits.

11.2.4.1 General.

11.2.4.1.1 Where horizontal exits are used in the means of egress, they shall conform to the general requirements of Section 11.1 and the requirements of 11.2.4.

11.2.4.1.2* Horizontal exits shall be permitted to be substituted for other exits where the total egress capacity of the other exits (stairs, ramps, doors leading outside the building) is not less than half that required for the entire area of the building or connected buildings, and provided that none of the other exits is a horizontal exit, unless otherwise provided in 11.2.4.1.3.

11.2.4.1.3 The requirement of 11.2.4.1.2 shall not apply to the following:

(1) Health care occupancies as otherwise provided in 19.2.2.5
(2) Detention and correctional occupancies as otherwise provided in 21.2.2.5

11.2.4.2 Fire Compartments.

11.2.4.2.1 Every fire compartment for which credit is permitted in connection with a horizontal exit shall have, in addition to the horizontal exit or exits, at least one exit, but not less than 50 percent of the required number and capacity of exits, that is not a horizontal exit, unless otherwise provided in 11.2.4.2.1.2.

11.2.4.2.1.1 Any fire compartment not having an exit leading outside shall be considered as part of an adjoining compartment with an exit leading to the outside.

11.2.4.2.1.2 The requirement of 11.2.4.2.1 shall not apply to the following:

(1) Health care occupancies as otherwise provided in 19.2.2.5
(2) Detention and correctional occupancies as otherwise provided in 21.2.2.5

11.2.4.2.2 Every horizontal exit for which credit is given shall be arranged so that there are continuously available paths of travel leading from each side of the exit to stairways or other means of egress leading to outside the building.

11.2.4.2.3 Wherever either side of the horizontal exit is occupied, the doors used in connection with the horizontal exit shall be unlocked from the egress side, unless otherwise permitted by the following:

(1) Health care occupancies as otherwise provided in Chapter 19
(2) Detention and correctional occupancies as otherwise provided in Chapter 21

11.2.4.2.4 The floor area on either side of a horizontal exit shall be sufficient to hold the occupants of both floor areas and shall provide at least 3 ft^2 (0.28 m^2) clear floor area per person, unless otherwise permitted by the following:

(1) Health care occupancies as otherwise provided in Chapter 19
(2) Detention and correctional occupancies as otherwise provided in Chapter 21

11.2.4.3 Fire Barriers.

11.2.4.3.1 Fire barriers separating building areas between which there are horizontal exits shall have a 2-hour fire resistance rating and shall provide a separation that is continuous to ground.

11.2.4.3.2 Where a fire barrier provides a horizontal exit in any story of a building, such fire barrier shall not be required on other stories, provided that the following criteria are met:

(1) The stories on which the fire barrier is omitted are separated from the story with the horizontal exit by construction having a fire resistance rating at least equal to that of the horizontal exit fire barrier.
(2) Vertical openings between the story with the horizontal exit and the open fire area story are enclosed with construction having a fire resistance rating at least equal to that of the horizontal exit fire barrier.
(3) All required exits, other than horizontal exits, discharge directly to the outside.

11.2.4.3.3 Where fire barriers serving horizontal exits terminate at outside walls, and the outside walls are at an angle of less than 180 degrees for a distance of 10 ft (3050 mm) on each side of the horizontal exit, the outside walls shall have not less than a 1-hour fire resistance rating with not less than ¾-hour fire protection–rated opening protectives for a distance of 10 ft (3050 mm) on each side of the horizontal exit.

11.2.4.3.4 Fire barriers forming horizontal exits shall not be penetrated by ducts, unless one of the following criteria is met:

(1) The building is protected throughout by an approved, electrically supervised automatic sprinkler system in accordance with Section 55.3.

Copyright National Fire Protection Association
Provided by IHS under license with NFPA
No reproduction or networking permitted without license from IHS
Not for Resale

(2) The duct penetrations are those permitted in detention and correctional occupancies, as otherwise provided in 21.2.2.5.3, and are protected by combination fire dampers/smoke leakage–rated dampers that meet the smoke damper actuation requirements of 8.11.6.7.

11.2.4.3.5 Any opening in fire barriers forming horizontal exits shall be protected as provided in Sections 8.7 and 8.8.

11.2.4.3.6 Doors in horizontal exits shall comply with 11.2.1.4, unless they are sliding doors as otherwise provided in 29.2.2.5.2 and 30.2.2.5.2.

11.2.4.3.7 Swinging fire doors shall be permitted in horizontal exits, provided that the doors swing in the direction of egress travel.

11.2.4.3.8* Doors in horizontal exits shall be designed and installed to minimize air leakage in accordance with 11.2.1.1.4. Doors in horizontal exits shall be installed in accordance with NFPA 105.

11.2.4.3.9 All fire doors in horizontal exits shall be self-closing or automatic-closing in accordance with 11.2.1.8. Horizontal exit doors located across a corridor shall be automatic-closing in accordance with 11.2.1.8.2.

11.2.4.4 Bridges and Balconies.

11.2.4.4.1 Each bridge or balcony used in conjunction with horizontal exits shall have guards and handrails in conformity with the requirements of 11.2.2.4.

11.2.4.4.2 Every bridge or balcony shall be not less than the width of the door to which it leads and shall be not less than 44 in. (1120 mm) wide for new construction.

11.2.4.4.3 Where the bridge or balcony serves as a horizontal exit in one direction, the door shall be required to swing only in the direction of egress travel.

11.2.4.4.4 Where the bridge or balcony serves as a horizontal exit in both directions, doors shall be provided in pairs that swing in opposite directions, with only the door swinging in the direction of egress travel included when determining egress capacity, unless otherwise provided in 11.2.4.4.5.

11.2.4.4.5 The requirement of 11.2.4.4.4 shall not apply if the bridge or balcony has sufficient floor area to accommodate the occupant load of either connected building or fire area based on 3 ft^2 (0.28 m^2) per person.

11.2.4.4.6 In climates subject to the accumulation of snow and ice, the bridge or balcony floor shall be protected to prevent the accumulation of snow and ice.

11.2.4.4.7 In both of the connected buildings or fire areas, all wall openings, any part of which is within 10 ft (3050 mm) of any bridge or balcony, as measured horizontally or below, shall be protected with fire door assemblies or fixed fire window assemblies having a ¾-hour fire protection rating.

11.2.5 Ramps.

11.2.5.1 General. Every ramp used as a component in a means of egress shall conform to the general requirements of Section 11.1 and to the requirements of 11.2.5.

11.2.5.2 Vehicle Ramps. Vehicle ramps in parking structures, as permitted in 30.8.2.2.6, and not an accessible means of egress or other accessible element, shall be exempt from the provisions of 11.2.5.

11.2.5.3 Dimensional Criteria. Dimensional criteria for ramps shall be in accordance with Table 11.2.5.3, unless otherwise provided by the following:

(1) The maximum slope requirement shall not apply to ramps in assembly occupancies, as otherwise provided in 16.2.2.6.
(2) The requirements of Table 11.2.5.3 shall not apply to industrial equipment access areas, as otherwise provided in 29.2.5.3.
(3) Ramps providing access to vehicles, vessels, mobile structures, and aircraft shall not be required to comply with the maximum slope or maximum rise for a single ramp run.

11.2.5.4 Ramp Details.

Table 11.2.5.3 Ramp Dimensional Criteria

Feature	Dimensional Criteria
Minimum width clear of all obstructions, except projections not more than 4½ in. (114 mm) at or below handrail height on each side	44 in. (1120 mm)
Maximum slope	1 in 12
Maximum cross slope	1 in 48
Maximum rise for a single ramp	30 in. (760 mm)

11.2.5.4.1 Construction. Ramp construction shall be as follows:

(1) All ramps serving as required means of egress shall be of permanent fixed construction.
(2) Each ramp in buildings required by this *Code* to be of Type I or Type II construction shall be noncombustible or limited-combustible throughout.
(3) The ramp floor and landings shall be solid and without perforations.

11.2.5.4.2 Landings. Ramp landings shall be as follows:

(1) Ramps shall have landings located at the top, at the bottom, and at doors opening onto the ramp.
(2) The slope of any landing shall not be steeper than 1 in 48.
(3) Every landing shall have a width not less than the width of the ramp.
(4) Every landing, except as otherwise provided in 11.2.5.4.2(5), shall be not less than 60 in. (1525 mm) long in the direction of travel.
(5) Where the ramp is not part of an accessible route, the ramp landings shall not be required to exceed 48 in. (1220 mm) in the direction of travel, provided that the ramp has a straight run.
(6) Any changes in travel direction shall be made only at landings.
(7) Ramps and intermediate landings shall continue with no decrease in width along the direction of egress travel.

11.2.5.4.3 Drop-Offs. Ramps and landings with drop-offs shall have curbs, walls, railings, or projecting surfaces that prevent people from traveling off the edge of the ramp. Curbs or barriers shall be not less than 2 in. (51 mm) in height.

Copyright National Fire Protection Association
Provided by IHS under license with NFPA
No reproduction or networking permitted without license from IHS
Not for Resale

11.2.5.5 Guards and Handrails.

11.2.5.5.1 Guards complying with 11.2.2.4 shall be provided for ramps, unless otherwise provided in 11.2.5.5.4.

11.2.5.5.2 Handrails complying with 11.2.2.4 shall be provided along both sides of a ramp run with a rise greater than 6 in. (150 mm), unless otherwise provided in 11.2.5.5.4.

11.2.5.5.3 The height of handrails and guards shall be measured vertically to the top of the guard or rail from the walking surface adjacent thereto.

11.2.5.5.4 The requirements of 11.2.5.5.1 and 11.2.5.5.2 shall not apply to guards and handrails provided for ramped aisles in assembly occupancies in accordance with 16.2.5.6.

11.2.5.6 Enclosure and Protection of Ramps. Ramps in a required means of egress shall be enclosed or protected as a stair in accordance with 11.2.2.5 and 11.2.2.7. The use of 11.2.2.7.3.1(2) shall be prohibited.

11.2.5.7 Special Provisions for Outside Ramps.

11.2.5.7.1* Visual Protection. Outside ramps shall be arranged to avoid any impediments to their use by persons having a fear of high places. For ramps more than three stories in height, any arrangement intended to meet this requirement shall be at least 48 in. (1220 mm) in height.

11.2.5.7.2* Water Accumulation. Outside ramps and landings shall be designed to minimize water accumulation on their surfaces.

11.2.6 Exit Passageways.

11.2.6.1* General. Exit passageways used as exit components shall conform to the general requirements of Section 11.1 and to the requirements of 11.2.6.

11.2.6.2 Enclosure. An exit passageway shall be separated from other parts of the building as specified in 11.1.3.2, and the alternative provided in 11.2.6.3 shall be permitted.

11.2.6.3 Fire Window Assemblies. Fire window assemblies in accordance with 8.7.5 shall be permitted to be installed in separations required by 11.1.3.2 where the building is protected throughout by an approved, electrically supervised automatic sprinkler system in accordance with Section 55.3.

11.2.6.4 Stair Discharge. An exit passageway that serves as a discharge from a stair enclosure shall have not less than the same fire resistance rating and opening protective fire protection rating as those required for the stair enclosure.

11.2.6.5* Width. The width of an exit passageway shall be adequate to accommodate the aggregate required capacity of all exits that discharge through it, unless one of the following conditions applies:

(1) Where an exit passageway serves occupants of the level of exit discharge as well as other stories, the capacity shall not be required to be aggregated.
(2) As provided in 27.2.2.7.2, an exit passageway in a mall building shall be permitted to accommodate occupant loads from the mall and the tenant spaces independently.

11.2.6.6 Floor. The floor shall be solid and without perforations.

11.2.7 Escalators and Moving Walks. Escalators and moving walks shall not constitute any part of the required means of egress.

11.2.8* Fire Escape Stairs. Fire escape stairs shall not constitute any of the required means of egress.

11.2.9 Fire Escape Ladders.

11.2.9.1 General. Fire escape ladders complying with 11.2.9.2 and 11.2.9.3 shall be permitted in the means of egress only where providing one of the following:

(1) Second means of egress from storage elevators as permitted in 30.7.2
(2) Means of egress from towers and elevated platforms around machinery or similar spaces subject to occupancy not to exceed three persons who are all capable of using the ladder
(3) Secondary means of egress from boiler rooms or similar spaces subject to occupancy not to exceed three persons who are all capable of using the ladder

11.2.9.2 Construction and Installation.

11.2.9.2.1 Fire escape ladders shall comply with ANSI A14.3, *Safety Requirements for Fixed Ladders*, and the alternative provided in 11.2.9.2.2 shall be permitted.

11.2.9.2.2 Industrial stairs complying with the minimum requirements for fixed stairs of ANSI A1264.1, *Safety Requirements for Workplace Floor and Wall Openings, Stairs and Railing Systems*, shall be permitted where fire escape ladders are permitted in accordance with 29.2.2.9.

11.2.9.2.3 Ladders shall be installed with a pitch that exceeds 75 degrees.

11.2.9.3 Access. The lowest rung of any ladder shall be not more than 12 in. (305 mm) above the level of the surface beneath it.

11.2.10* Slide Escapes.

11.2.10.1 General.

11.2.10.1.1 A slide escape shall be permitted as a component in a means of egress where permitted in Chapters 16 through 30.

11.2.10.1.2 Each slide escape shall be of an approved type.

11.2.10.2 Capacity.

11.2.10.2.1 Slide escapes, where permitted as required means of egress, shall be rated at a capacity of 60 persons.

11.2.10.2.2 Slide escapes shall not constitute more than 25 percent of the required egress capacity from any building or structure or any individual story thereof, unless otherwise provided for industrial occupancies in 29.2.2.10.

11.2.11 Alternating Tread Devices.

11.2.11.1 Alternating tread devices complying with 11.2.11.2 shall be permitted in the means of egress only where providing one of the following:

(1) Second means of egress from storage elevators as permitted in 30.7.2
(2) Means of egress from towers and elevated platforms around machinery or similar spaces subject to occupancy not to exceed three persons who are all capable of using the alternating tread device
(3) Secondary means of egress from boiler rooms or similar spaces subject to occupancy not to exceed three persons who are all capable of using the alternating tread device

Copyright National Fire Protection Association
Provided by IHS under license with NFPA
No reproduction or networking permitted without license from IHS
Not for Resale

11.2.11.2 Alternating tread devices shall comply with the following:

(1) Handrails shall be provided on both sides of alternating tread devices in accordance with 11.2.2.4.5.
(2) The clear width between handrails shall be not less than 17 in. (430 mm) and not more than 24 in. (610 mm).
(3) Headroom shall be not less than 6 ft 8 in. (2030 mm).
(4) The angle of the device shall be between 50 degrees and 68 degrees to horizontal.
(5) The height of the riser shall not exceed 9½ in. (240 mm).
(6) Treads shall have a projected tread depth of not less than 5⅔ in. (145 mm), measured in accordance with 11.2.2.3.5, with each tread providing 9½ in. (240 mm) of depth, including tread overlap.
(7) A distance of not less than 6 in. (150 mm) shall be provided between the stair handrail and any other object.
(8) The initial tread of the stair shall begin at the same elevation as the platform, landing, or floor surface.
(9) The alternating treads shall not be laterally separated by a distance of more than 2 in. (51 mm).
(10) The occupant load served shall not exceed three.

11.2.12 Areas of Refuge.

11.2.12.1 General.

11.2.12.1.1 Unless otherwise provided in 11.2.12.1.2, an area of refuge used as part of a required accessible means of egress in accordance with 11.5.4, or used as a part of any required means of egress, shall conform to the following:

(1) General requirements of Section 11.1
(2) Requirements of 11.2.12.2 and 11.2.12.3

11.2.12.1.2 The requirement of 11.2.12.1.1(2) shall not apply to areas of refuge consisting of stories of buildings protected throughout by an approved, electrically supervised automatic sprinkler system in accordance with Section 55.3.

11.2.12.2 Accessibility.

11.2.12.2.1 Required portions of an area of refuge shall be accessible from the space they serve by an accessible means of egress.

11.2.12.2.2 Required portions of an area of refuge shall have access to a public way via an exit or an elevator without returning to the building spaces used for travel to the area of refuge.

11.2.12.2.3* Where the exit providing egress from an area of refuge to a public way that is in accordance with 11.2.12.2.2 includes stairs, the clear width of landings and stair flights, measured between handrails and at all points below handrail height, shall not be less than 48 in. (1220 mm), unless otherwise permitted by the following:

(1) The minimum 48 in. (1220 mm) clear width shall not be required where the area of refuge is separated from the remainder of the story by a horizontal exit meeting the requirements of 11.2.4. *(See also 11.2.12.3.4.)*
(2)*For stairs where egress is in the descending direction, a clear width of not less than 37 in. (940 mm), measured at and below handrail height, shall be permitted where all of the following are met:
   (a) An approved stair descent device is provided on each floor served by the stair.
   (b) Additional approved stair descent devices are provided on floors with an occupant load exceeding 200 at the ratio of one device per 200 occupants.
   (c) The required approved stair descent devices are provided in an approved location on the floor.

11.2.12.2.4* Where an elevator provides access from an area of refuge to a public way that is in accordance with 11.2.12.2.2, the following criteria shall be met:

(1) The elevator shall be provided with fire fighters emergency operation in compliance with ASME A17.1, *Safety Code for Elevators and Escalators*.
(2) The power supply shall be protected against interruption from fire occurring within the building but outside the area of refuge.
(3) The elevator shall be located in a shaft system meeting the requirements for smokeproof enclosures in accordance with 11.2.3, unless otherwise provided in 11.2.12.2.4.1 and 11.2.12.2.4.2.

11.2.12.2.4.1 The smokeproof enclosure specified in 11.2.12.2.4(3) shall not be required for areas of refuge that are more than 1000 ft^2 (93 m^2) and that are created by a horizontal exit meeting the requirements of 11.2.4.

11.2.12.2.4.2 The smokeproof enclosure specified in 11.2.12.2.4(3) shall not be required for elevators complying with 11.2.13.

11.2.12.2.5 The area of refuge shall be provided with a two-way communication system for communication between the area of refuge and a central control point. The door to the stair enclosure or the elevator door and the associated portion of the area of refuge that the stair enclosure door or elevator door serves shall be identified by signage. *(See 11.2.12.3.5.)*

11.2.12.2.6* Instructions for summoning assistance, via the two-way communication system, and written identification of the area of refuge location shall be posted adjacent to the two-way communication system.

11.2.12.3 Details.

11.2.12.3.1* Each area of refuge shall be sized to accommodate one wheelchair space of 30 in. × 48 in. (760 mm × 1220 mm) for each 200 occupants, or fraction thereof, based on the occupant load served by the area of refuge. Such wheelchair spaces shall maintain the width of a means of egress to not less than that required for the occupant load served, but to not less than 36 in. (915 mm).

11.2.12.3.2* For any area of refuge that does not exceed 1000 ft^2 (93 m^2), it shall be demonstrated by calculation or test that tenable conditions are maintained within the area of refuge for a period of 15 minutes when the exposing space on the other side of the separation creating the area of refuge is subjected to the maximum expected fire conditions.

11.2.12.3.3 Access to any designated wheelchair space in an area of refuge shall not be through more than one adjoining wheelchair space.

11.2.12.3.4* Each area of refuge shall be separated from the remainder of the story by a barrier with not less than a 1-hour fire resistance rating, unless a greater rating is required in other provisions of this *Code*.

11.2.12.3.4.1 Barriers, and any openings in them, shall minimize air leakage and restrict the passage of smoke.

11.2.12.3.4.2 Doors in barriers shall be designed to minimize air leakage in accordance with 11.2.1.1.4 and installed in accordance with NFPA 105.

Copyright National Fire Protection Association
Provided by IHS under license with NFPA
No reproduction or networking permitted without license from IHS
Not for Resale

11.2.12.3.4.3 Doors in barriers shall have not less than a 20-minute fire protection rating, unless a greater rating is required in other provisions of this *Code*, and shall be either self-closing or automatic-closing in accordance with 11.2.1.8.

11.2.12.3.4.4 Ducts shall be permitted to penetrate barriers, unless prohibited in other provisions of this *Code*, and shall be protected by a smoke damper in accordance with 8.11.6, or other approved means, to resist the transfer of smoke into the area of refuge.

11.2.12.3.5 Signs complying with 11.10.8.1 and 11.10.8.2 that read "area of refuge," that are illuminated in accordance with exit sign illumination requirements, and that include the international symbol of accessibility shall be provided to identify the location of areas of refuge as follows:

(1) At each door providing access to the area of refuge
(2) At all exits not providing an accessible means of egress *(see 3.3.391.1, Accessible Means of Egress)*
(3) Where necessary to indicate clearly the direction to an area of refuge

11.2.12.3.6 Tactile signage complying with ICC/ANSI A117.1 shall be located at each door to an area of refuge.

11.2.13* Elevators in Towers.

11.2.13.1* General. An elevator complying with the requirements of Chapter 54 and 11.2.13 shall be permitted to be used as a second means of egress from towers as defined in 3.3.623 *(see 3.3.623, Tower),* provided that the following criteria are met:

(1) The tower and any attached structure shall be protected throughout by an approved, electrically supervised automatic sprinkler system in accordance with Section 55.3.
(2) The tower shall be subject to occupancy not to exceed 90 persons.
(3) Primary egress discharges shall be directly to the outside.
(4) No areas containing high hazard contents exceeding the maximum allowable quantities per control area as set forth in 34.1.3 shall exist in the tower or attached structure.
(5) One hundred percent of the egress capacity shall be provided independent of the elevators.
(6) An evacuation plan shall be implemented, specifically including the elevator, and staff personnel shall be trained in operations and procedures for elevator emergency use in normal operating mode prior to fire fighter recall.
(7) The tower shall not be used by the general public.

11.2.13.2 Elevator Evacuation System Capacity.

11.2.13.2.1 The elevator car shall have a capacity of not less than eight persons.

11.2.13.2.2 The elevator lobby shall have a capacity of not less than 50 percent of the occupant load of the area served by the lobby. The capacity shall be calculated by using 3 ft^2 (0.28 m^2) per person and shall also include one wheelchair space of 30 in. × 48 in. (760 mm × 1220 mm) for each 50 persons, or fraction thereof, of the total occupant load served by that lobby.

11.2.13.3 Elevator Lobby. On every floor served by the elevator, there shall be an elevator lobby. Barriers forming the elevator lobby shall have a fire resistance rating of not less than 1 hour and shall be arranged as a smoke barrier in accordance with Section 8.11.

11.2.13.4 Elevator Lobby Doors. Elevator lobby doors shall have a fire protection rating of at least 1 hour. The transmitted temperature end point shall not exceed 450°F (250°C) above ambient at the end of 30 minutes of the fire exposure specified in the test method referenced in 8.7.5.2. Elevator lobby doors shall be self-closing or automatic-closing in accordance with 11.2.1.8.

11.2.13.5 Door Activation. The elevator lobby doors shall close in response to a signal from a smoke detector located directly outside the elevator lobby adjacent to or on each door opening. Closing of lobby doors in response to a signal from the building fire alarm system shall be permitted. Closing of one elevator lobby door by means of a smoke detector or a signal from the building fire alarm system shall result in closing of all elevator lobby doors serving that elevator evacuation system.

11.2.13.6* Water Protection. Building elements shall be used to restrict water exposure of elevator equipment.

11.2.13.7* Power and Control Wiring. Elevator equipment, elevator communications, elevator machine room cooling, and elevator controller cooling shall be supplied by both normal and standby power. Wiring for power and control shall be located and properly protected to ensure at least 1 hour of operation in the event of a fire.

11.2.13.8* Communications. Two-way communication systems shall be provided between elevator lobbies and a central control point and between elevator cars and a central control point. Communications wiring shall be protected to ensure at least 1 hour of operation in the event of fire.

11.2.13.9* Elevator Operation. Elevators shall be provided with fire fighters emergency operation in accordance with ASME A17.1.

11.2.13.10 Maintenance. Where an elevator lobby is served by only one elevator car, the elevator evacuation system shall have a program of scheduled maintenance during times of building shutdown or low building activity. Repairs shall be performed within 24 hours of breakdown.

11.2.13.11 Signage. Signage shall comply with 11.10.8.2.

11.3 Capacity of Means of Egress.

11.3.1 Occupant Load.

11.3.1.1 Sufficient Capacity for Occupant Load. The total capacity of the means of egress for any story, balcony, tier, or other occupied space shall be sufficient for the occupant load thereof.

11.3.1.2* Occupant Load Factor. The occupant load in any building or portion thereof shall be not less than the number of persons determined by dividing the floor area assigned to that use by the occupant load factor for that use, as specified in Table 11.3.1.2 and Figure 11.3.1.2. Where both gross and net area figures are given for the same occupancy, calculations shall be made by applying the gross area figure to the gross area of the portion of the building devoted to the use for which the gross area figure is specified, and by applying the net area figure to the net area of the use for which the net area figure is specified.

Copyright National Fire Protection Association
Provided by IHS under license with NFPA
No reproduction or networking permitted without license from IHS
Not for Resale

Table 11.3.1.2 Occupant Load Factor

Use	ft^2 (per person)[a]	m^2 (per person)[a]
Assembly Use		
Concentrated use, without fixed seating	7 net	0.65 net
Less concentrated use, without fixed seating	15 net	1.4 net
Bench-type seating	1 person/18 linear in.	1 person/45.7 linear cm
Fixed seating	Number of fixed seats	Number of fixed seats
Waiting spaces	See 16.1.6.1.	See 16.1.6.1.
Kitchens	100	9.3
Library stack areas	100	9.3
Library reading rooms	50 net	4.6 net
Swimming pools	50 (of water surface)	4.6 (of water surface)
Swimming pool decks	30	2.8
Exercise rooms with equipment	50	4.6
Exercise rooms without equipment	15	1.4
Stages	15 net	1.4 net
Lighting and access catwalks, galleries, gridirons	100 net	9.3 net
Casinos and similar gaming areas	11	1
Skating rinks	50	4.6
Educational Use		
Classrooms	20 net	1.9 net
Shops, laboratories, vocational rooms	50 net	4.6 net
Day-Care Use	35 net	3.3 net
Health Care Use		
Inpatient treatment departments	240	22.3
Sleeping departments	120	11.1
Ambulatory health care	100	9.3
Detention and Correctional Use	120	11.1
Residential Use		
Hotels and dormitories	200	18.6
Apartment buildings	200	18.6
Board and care, large	200	18.6
Mercantile Use		
Sales area on street floor[b,c]	30	2.8
Sales area on two or more street floors[c]	40	3.7
Sales area on floor below street floor[c]	30	2.8
Sales area on floors above street floor[c]	60	5.6
Floors or portions of floors used only for offices	See business use.	See business use.
Floors or portions of floors used only for storage, receiving, and shipping, and not open to general public	300	27.9
Mall buildings	Per factors applicable to use of space[d]	Per factors applicable to use of space[d]
Business Use	100	9.3
Industrial Use		
General and high hazard industrial	100	9.3
Special purpose industrial	NA	NA
Storage Use		
In storage occupancies	NA	NA
In mercantile occupancies	300	27.9
In other than storage and mercantile occupancies	500	46.5

NA: Not applicable. The occupant load is the maximum probable number of occupants present at any time.

[a]All factors expressed in gross area unless marked "net."

[b]For the purpose of determining occupant load in mercantile occupancies where, due to differences in grade of streets on different sides, two or more floors directly accessible from streets (not including alleys or similar backstreets) exist, each such floor is considered a street floor. The occupant load factor is one person for each 40 ft^2 (3.7 m^2) of gross floor area of sales space.

[c]For the purposes of determining occupant load in mercantile occupancies with no street floor, but with access directly from the street by stairs or escalators, the floor at the point of entrance to the mercantile occupancy is considered the street floor. *(See 3.3.221.2, Street Floor.)*

[d]The portions of the mall, where considered a pedestrian way and not used as gross leasable area, are not assessed an occupant load based on Table 11.3.1.2. However, means of egress from a mall pedestrian way are provided for an occupant load determined by dividing the gross leasable area of the mall building (not including anchor stores) by the appropriate lowest whole number occupant load factor from Figure 11.3.1.2.

Each individual tenant space has means of egress to the outside or to the mall based on occupant loads figured by using the appropriate occupant load factor from Table 11.3.1.2.

Each individual anchor store has means of egress independent of the mall.

Copyright National Fire Protection Association
Provided by IHS under license with NFPA
No reproduction or networking permitted without license from IHS
Not for Resale

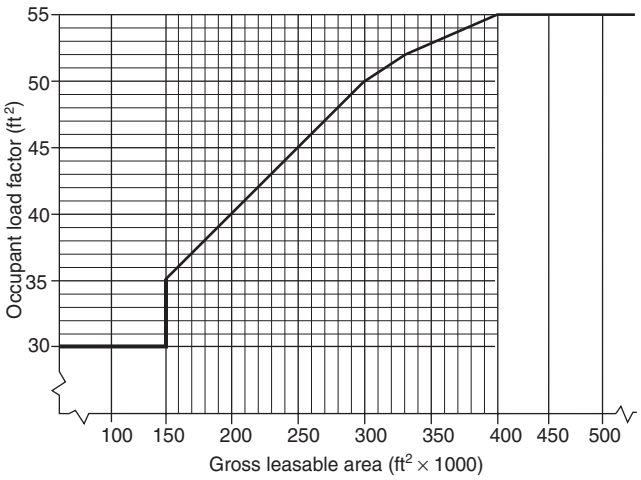

For SI units, 1 ft^2 = 0.093 m^2.

FIGURE 11.3.1.2 Mall Building Occupant Load Factors.

11.3.1.3 Occupant Load Increases.

11.3.1.3.1 The occupant load in any building or portion thereof shall be permitted to be increased from the occupant load established for the given use in accordance with 11.3.1.2 where all other requirements of this *Code* are also met, based on such increased occupant load.

11.3.1.3.2 The authority having jurisdiction shall be permitted to require an approved aisle, seating, or fixed equipment diagram to substantiate any increase in occupant load and shall be permitted to require that such a diagram be posted in an approved location.

11.3.1.4 Exits Serving More than One Story. Where exits serve more than one story, only the occupant load of each story considered individually shall be used in computing the required capacity of the exits at that story, provided that the required egress capacity of the exit is not decreased in the direction of egress travel.

11.3.1.5 Capacity from a Point of Convergence. Where means of egress from a story above and a story below converge at an intermediate story, the capacity of the means of egress from the point of convergence shall be not less than the sum of the capacity of the two means of egress.

11.3.1.6 Egress Capacity from Balconies and Mezzanines. Where any required egress capacity from a balcony or mezzanine passes through the room below, that required capacity shall be added to the required egress capacity of the room in which it is located.

11.3.2 Measurement of Means of Egress.

11.3.2.1 The width of means of egress shall be measured in the clear at the narrowest point of the exit component under consideration, unless otherwise provided in 11.3.2.2 or 11.3.2.3.

11.3.2.2 Projections within the means of egress of not more than 4½ in. (114 mm) on each side shall be permitted at a height of 38 in. (965 mm) and below.

11.3.2.3 In health care and ambulatory health care occupancies, projections shall be permitted in corridors in accordance with Chapters 19 and 20.

11.3.3 Egress Capacity.

11.3.3.1 Egress capacity for approved components of means of egress shall be based on the capacity factors shown in Table 11.3.3.1.

Table 11.3.3.1 Capacity Factors

	Stairways		Level Components and Ramps	
Occupancy Area	**in.***	**mm***	**in.***	**mm***
Board and care	0.4	10	0.2	5
Health care, sprinklered	0.3	7.6	0.2	5
Health care, nonsprinklered	0.6	15	0.5	13
High hazard contents exceeding the maximum allowable quantities per control area as set forth in 34.1.3	0.7	18	0.4	10
All others	0.3	7.6	0.2	5

*Per person.

11.3.3.2 The required capacity of a corridor shall be the occupant load that utilizes the corridor for exit access divided by the required number of exits to which the corridor connects, but the corridor capacity shall be not less than the required capacity of the exit to which the corridor leads.

11.3.4 Minimum Width.

11.3.4.1 The width of any means of egress, unless otherwise provided in 11.3.4.1.1 and 11.3.4.1.2, shall be as follows:

(1) Not less than that required for a given egress component in this chapter or Chapters 16 through 30
(2) Not less than 36 in. (915 mm)

11.3.4.1.1* The width of exit access that is formed by furniture and movable partitions, that serves not more than six people, and that has a length not exceeding 50 ft (15 m) shall meet both of the following criteria:

(1) The width shall be not less than 18 in. (455 mm) at and below a height of 38 in. (965 mm), and not less than 28 in. (710 mm) above a height of 38 in. (965 mm).
(2) A width of not less than 36 in. (915 mm) for exit access shall be capable of being provided without moving permanent walls.

11.3.4.1.2 The requirement of 11.3.4.1 shall not apply to the following:

(1) Doors, as otherwise provided in 11.2.1.2.4
(2) Aisles and aisle accessways in assembly occupancies, as otherwise provided in 16.2.5.5 through 16.2.5.8

Copyright National Fire Protection Association
Provided by IHS under license with NFPA
No reproduction or networking permitted without license from IHS
Not for Resale

(3) Industrial equipment access in industrial occupancies, as otherwise provided in 29.2.5.3

11.3.4.2 Where a single exit access leads to an exit, its capacity in terms of width shall be not less than the required capacity of the exit to which it leads.

11.3.4.3 Where more than one exit access leads to an exit, each shall have a width adequate for the number of persons it accommodates.

11.4 Number of Means of Egress.

11.4.1 General.

11.4.1.1 The number of means of egress from any balcony, mezzanine, story, or portion thereof shall be not less than two, except under one of the following conditions:

(1) A single means of egress shall be permitted in Chapters 16 through 30
(2) A single means of egress shall be permitted for a mezzanine or balcony where the common path of travel limitations of Chapters 16 through 30 are met

11.4.1.2 The number of means of egress from any story or portion thereof shall be as follows:

(1) Occupant load more than 500 but not more than 1000—not less than 3
(2) Occupant load more than 1000—not less than 4

11.4.1.3 Accessible means of egress in accordance with 11.5.4 that do not utilize elevators shall be permitted to serve as any or all of the required minimum number of means of egress.

11.4.1.4 The occupant load of each story considered individually shall be required to be used in computing the number of means of egress at each story, provided that the required number of means of egress is not decreased in the direction of egress travel.

11.4.1.5 Doors, other than the hoistway door; the elevator car door; and doors that are readily openable from the car side without a key, a tool, special knowledge, or special effort shall be prohibited at the point of access to an elevator car.

11.4.1.6 Elevator lobbies shall have access to at least one exit. Such exit access shall not require the use of a key, a tool, special knowledge, or special effort.

11.5 Arrangement of Means of Egress.

11.5.1 General.

11.5.1.1 Exits shall be located and exit access shall be arranged so that exits are readily accessible at all times.

11.5.1.1.1* Where exits are not immediately accessible from an open floor area, continuous passageways, aisles, or corridors leading directly to every exit shall be maintained and shall be arranged to provide access for each occupant to not less than two exits by separate ways of travel, unless otherwise provided in 11.5.1.1.3 and 11.5.1.1.4.

11.5.1.1.2 Exit access corridors shall provide access to not less than two approved exits, unless otherwise provided in 11.5.1.1.3 and 11.5.1.1.4.

11.5.1.1.3 The requirements of 11.5.1.1.1 and 11.5.1.1.2 shall not apply where a single exit is permitted in Chapters 16 through 30.

11.5.1.1.4 Where common paths of travel are permitted for an occupancy in Chapters 16 through 30, such common paths of travel shall be permitted but shall not exceed the limit specified.

11.5.1.2 Corridors shall provide exit access without passing through any intervening rooms other than corridors, lobbies, and other spaces permitted to be open to the corridor, unless otherwise provided in 11.5.1.3.

11.5.1.3 Corridors that are not required to be fire resistance rated shall be permitted to discharge into open floor plan areas.

11.5.1.4 Remoteness shall be provided in accordance with 11.5.1.4.1 through 11.5.1.4.6.

11.5.1.4.1 Where more than one exit is required from a building or portion thereof, such exits shall be remotely located from each other and shall be arranged and constructed to minimize the possibility that more than one has the potential to be blocked by any one fire or other emergency condition.

11.5.1.4.2* Where two exits or exit access doors are required, they shall be located at a distance from one another not less than one-half the length of the maximum overall diagonal dimension of the building or area to be served, measured in a straight line between the nearest edge of the exit doors or exit access doors, unless otherwise provided in 11.5.1.4.3 through 11.5.1.4.6.

11.5.1.4.3 In buildings protected throughout by an approved, electrically supervised automatic sprinkler system in accordance with Section 55.3, the minimum separation distance between two exits or exit access doors, measured in accordance with 11.5.1.4.2, shall be not less than one-third the length of the maximum overall diagonal dimension of the building or area to be served.

11.5.1.4.4 Where exit enclosures are provided as the required exits and are interconnected by not less than a 1-hour fire resistance–rated corridor, exit separation shall be permitted to be measured along the line of travel within the corridor.

11.5.1.4.5 Where more than two exits or exit access doors are required, at least two of the required exits or exit access doors shall be arranged to comply with the minimum separation distance requirement.

11.5.1.4.6 The balance of the exits or exit access doors specified in 11.5.1.4.5 shall be located so that, if one becomes blocked, the others are available.

11.5.1.5* Interlocking or scissor stairs shall only be permitted to be considered as a single exit.

11.5.1.6* Exit access shall be arranged so that there are no dead ends in corridors, unless permitted by, and limited to, the length specified in Chapters 16 through 30.

11.5.1.7 Exit access from rooms or spaces shall be permitted to be through adjoining or intervening rooms or areas, provided that such adjoining rooms are accessory to the area served. Foyers, lobbies, and reception rooms constructed as required for corridors shall not be construed as intervening rooms. Exit access shall be arranged so that it is not necessary to pass through any area identified under hazardous area protection in Chapters 16 through 30.

11.5.2 Impediments to Egress. See also 11.1.9 and 11.2.1.5.

Copyright National Fire Protection Association
Provided by IHS under license with NFPA
No reproduction or networking permitted without license from IHS
Not for Resale

11.5.2.1* Access to an exit shall not pass through kitchens, storerooms other than as provided in 27.2.5.8, restrooms, closets, bedrooms or similar spaces, or other rooms or spaces subject to locking, unless passage through such rooms or spaces is permitted for the occupancy by Chapters 19, 20, and 21.

11.5.2.2* Exit access and exit doors shall be designed and arranged to be clearly recognizable.

11.5.2.2.1 Hangings or draperies shall not be placed over exit doors or located to conceal or obscure any exit.

11.5.2.2.2 Curtains shall be permitted across means of egress openings in tent walls, provided that the following criteria are met:

(1) They are distinctly marked in contrast to the tent wall so as to be recognizable as means of egress.
(2) They are installed across an opening that is at least 6 ft (1830 mm) in width.
(3) They are hung from slide rings or equivalent hardware so as to be readily moved to the side to create an unobstructed opening in the tent wall of the minimum width required for door openings.

11.5.3 Exterior Ways of Exit Access.

11.5.3.1 Exit access shall be permitted to be by means of any exterior balcony, porch, gallery, or roof that conforms to the requirements of this chapter.

11.5.3.2 The long side of the balcony, porch, gallery, or similar space shall be at least 50 percent open and shall be arranged to restrict the accumulation of smoke.

11.5.3.3 Exterior exit access balconies shall be separated from the interior of the building by walls and opening protectives as required for corridors, unless the exterior exit access balcony is served by at least two remote stairs that can be accessed without it being necessary for any occupant to travel past an unprotected opening to reach one of the stairs, or unless dead ends on the exterior exit access do not exceed 20 ft (6100 mm).

11.5.3.4 Exterior exit access shall be arranged so that there are no dead ends in excess of those permitted for dead-end corridors in Chapters 16 through 30.

11.5.4 Accessible Means of Egress.

11.5.4.1* Areas accessible to people with severe mobility impairment shall have not less than two accessible means of egress, unless otherwise provided in 11.5.4.1.2 through 11.5.4.1.4.

11.5.4.1.1 Access within allowable travel distance shall be provided to not less than one accessible area of refuge or one accessible exit providing an accessible route to an exit discharge.

11.5.4.1.2 A single accessible means of egress shall be permitted from buildings or areas of buildings permitted to have a single exit.

11.5.4.1.3 Accessible means of egress shall not be required in health care occupancies protected throughout by an approved, electrically supervised automatic sprinkler system in accordance with Section 55.3.

11.5.4.1.4 Exit access travel along the accessible means of egress shall be permitted to be common for the distances permitted as common paths of travel.

11.5.4.2 Where two accessible means of egress are required, the exits serving these paths shall be located at a distance from one another not less than one-half the length of the maximum overall diagonal dimension of the building or area to be served. This distance shall be measured in a straight line between the nearest edge of the exit doors or exit access doors, unless otherwise permitted in 11.5.4.2.1 through 11.5.4.2.3.

11.5.4.2.1 Where exit enclosures are provided as the required exits and are interconnected by not less than a 1-hour fire resistance–rated corridor, exit separation shall be permitted to be measured along the line of travel within the corridor.

11.5.4.2.2 The requirement of 11.5.4.2 shall not apply to buildings protected throughout by an approved, electrically supervised automatic sprinkler system in accordance with Section 55.3.

11.5.4.2.3 The requirement of 11.5.4.2 shall not apply where the physical arrangement of means of egress prevents the possibility that access to both accessible means of egress will be blocked by any one fire or other emergency condition, as approved by the authority having jurisdiction.

11.5.4.3 Each required accessible means of egress shall be continuous from each accessible occupied area to a public way or area of refuge in accordance with 11.2.12.2.2.

11.5.4.4 Where an exit stair is used in an accessible means of egress, it shall comply with 11.2.12.2.3 and shall either incorporate an area of refuge within an enlarged story-level landing or shall be accessed from an area of refuge.

11.5.4.5 To be considered part of an accessible means of egress, an elevator shall be in accordance with 11.2.12.2.4.

11.5.4.6 To be considered part of an accessible means of egress, a smoke barrier in accordance with Section 8.11 with not less than a 1-hour fire resistance rating, or a horizontal exit in accordance with 11.2.4, shall discharge to an area of refuge in accordance with 11.2.12.

11.5.4.7 Accessible stories that are four or more stories above or below a story of exit discharge shall have not less than one elevator complying with 11.5.4.5, except as modified in 11.5.4.8.

11.5.4.8 Where elevators are required by 11.5.4.7, the smokeproof enclosure required by 11.2.12.2.4 shall not be required in buildings protected throughout by an approved, supervised automatic sprinkler system in accordance with 55.3.1.1(1).

11.5.4.9 An area of refuge used as part of a required accessible means of egress shall be in accordance with 11.2.12.

11.6 Measurement of Travel Distance to Exits.

11.6.1 The travel distance within any occupied space to not less than one exit, measured in accordance with 11.6.2 through 11.6.5, shall not exceed the limits specified in this *Code*.

11.6.2* The travel distance to an exit shall be measured on the floor or other walking surface along the centerline of the natural path of travel, starting from the most remote point subject to occupancy, curving around any corners or obstructions with a 12 in. (305 mm) clearance therefrom, and ending at the center of the doorway or other point at which the exit begins. Where measurement includes stairs, the measurement shall be taken in the plane of the tread nosing.

Copyright National Fire Protection Association
Provided by IHS under license with NFPA
No reproduction or networking permitted without license from IHS
Not for Resale

11.6.3* Where open stairways or ramps are permitted as a path of travel to required exits, measurement of the distance shall include the travel on the stairway or ramp and the travel from the end of the stairway or ramp to an outside door or other exit in addition to the distance traveled to reach the stairway or ramp.

11.6.4 Travel distance limitations shall be as provided in Chapters 16 through 30 and, for areas containing high hazard contents exceeding the maximum allowable quantities per control area as set forth in 34.1.3, shall be in accordance with Chapter 34.

11.6.5 Where any part of an exterior exit is within a 10 ft (3050 mm) horizontal distance of any unprotected building opening, as permitted by 11.2.2.7.3.1(1) through (3) for outside stairs, the travel distance to the exit shall include the length of travel to ground level.

11.7 Discharge from Exits.

11.7.1* Exit Termination. Exits shall terminate directly, at a public way or at an exterior exit discharge, unless otherwise provided in 11.7.1.2 through 11.7.1.4.

11.7.1.1 Yards, courts, open spaces, or other portions of the exit discharge shall be of required width and size to provide all occupants with a safe access to a public way.

11.7.1.2 The requirement of 11.7.1 shall not apply to interior exit discharge as otherwise provided in 11.7.2.

11.7.1.3 The requirement of 11.7.1 shall not apply to rooftop exit discharge as otherwise provided in 11.7.6.

11.7.1.4 Means of egress shall be permitted to terminate in an exterior area of refuge for detention and correctional occupancies as otherwise provided in 21.2.7.1.

11.7.2 Discharge Through Areas on Level of Exit Discharge. Not more than 50 percent of the required number of exits, and not more than 50 percent of the required egress capacity, shall be permitted to discharge through areas on the level of exit discharge, unless otherwise provided in 11.7.2.1, provided that the criteria of 11.7.2.2 through 11.7.2.6 are met.

11.7.2.1 One hundred percent of the exits shall be permitted to discharge through areas on the level of exit discharge in detention and correctional occupancies, as otherwise provided in 21.2.7.2.

11.7.2.2 The discharge specified in 11.7.2 shall lead to a free and unobstructed way to the exterior of the building, and such way shall be readily visible and identifiable from the point of discharge from the exit.

11.7.2.3 The level of discharge shall be protected throughout by an approved automatic sprinkler system in accordance with Section 55.3, or the portion of the level of discharge used for discharge shall be protected by an approved automatic sprinkler system in accordance with Section 55.3 and shall be separated from the nonsprinklered portion of the floor by a fire resistance rating meeting the requirements for the enclosure of exits. *(See 11.1.3.2.1.)*

11.7.2.4 The requirement of 11.7.2.3 shall not apply where the discharge area is a vestibule or foyer meeting all of the following:

(1) The depth from the exterior of the building shall be not more than 10 ft (3050 mm), and the length shall be not more than 30 ft (9140 mm).
(2) The foyer shall be separated from the remainder of the level of discharge by construction providing protection not less than the equivalent of wired glass in steel frames.
(3) The foyer shall serve only as means of egress and shall include an exit directly to the outside.

11.7.2.5 The entire area on the level of discharge shall be separated from areas below by construction having a fire resistance rating not less than that required for the exit enclosure, unless otherwise provided in 11.7.2.6.

11.7.2.6 Levels below the level of discharge in an atrium shall be permitted to be open to the level of discharge where such level of discharge is protected in accordance with 8.12.3.

11.7.3 Arrangement and Marking of Exit Discharge. The exit discharge shall be arranged and marked to make clear the direction of egress to a public way. Stairs shall be arranged so as to make clear the direction of egress to a public way. Stairs that continue more than one-half story beyond the level of exit discharge shall be interrupted at the level of exit discharge by partitions, doors, or other effective means.

11.7.4 Components of Exit Discharge. Doors, stairs, ramps, corridors, exit passageways, bridges, balconies, escalators, moving walks, and other components of an exit discharge shall comply with the detailed requirements of this chapter for such components.

11.7.5 Signs. See 11.2.2.6.

11.7.6 Discharge to Roofs. Where approved by the authority having jurisdiction, exits shall be permitted to discharge to roofs or other sections of the building, or an adjoining building, where the following criteria are met:

(1) The roof construction has a fire resistance rating not less than that required for the exit enclosure.
(2) There is a continuous and safe means of egress from the roof.

11.8 Illumination of Means of Egress.

11.8.1 General.

11.8.1.1* Illumination of means of egress shall be provided in accordance with Section 11.8 for every building and structure where required in Chapters 16 through 30. For the purposes of this requirement, exit access shall include only designated stairs, aisles, corridors, ramps, escalators, and passageways leading to an exit. For the purposes of this requirement, exit discharge shall include only designated stairs, aisles, corridors, ramps, escalators, walkways, and exit passageways leading to a public way.

11.8.1.2 Illumination of means of egress shall be continuous during the time that the conditions of occupancy require that the means of egress be available for use, unless otherwise provided in 11.8.1.2.2.

11.8.1.2.1 Artificial lighting shall be employed within the means of egress for such periods of time as are required to maintain the illumination to the minimum criteria values herein specified.

11.8.1.2.2 Automatic, motion sensor–type lighting switches shall be permitted within the means of egress, provided that the switch controllers are equipped for fail-safe operation, the illumination timers are set for a minimum 15-minute duration, and the motion sensor is activated by any occupant movement in the area served by the lighting units.

--`,,```,,,,````-`-`,,`,,`,`,,`---

Copyright National Fire Protection Association
Provided by IHS under license with NFPA
No reproduction or networking permitted without license from IHS
Not for Resale

11.8.1.3* The floors and other walking surfaces within an exit and within the portions of the exit access and exit discharge designated in 11.8.1.1 shall be illuminated as follows:

(1) During conditions of stair use, the minimum illumination for stairs shall be at least 10 ft-candle (108 lux), measured at the walking surfaces.
(2) The minimum illumination for floors and walking surfaces, other than stairs, shall be to values of at least 1 ft-candle (10.8 lux), measured at the floor.
(3) In assembly occupancies, the illumination of walking surfaces of exit access shall be at least 0.2 ft-candle (2.2 lux) during periods of performances or projections involving directed light.
(4) The minimum illumination requirements shall not apply where operations or processes require low lighting levels.

11.8.1.4* Required illumination shall be arranged so that the failure of any single lighting unit does not result in an illumination level of less than 0.2 ft-candle (2.2 lux) in any designated area.

11.8.1.5 The equipment or units installed to meet the requirements of Section 11.10 also shall be permitted to serve the function of illumination of means of egress, provided that all requirements of Section 11.8 for such illumination are met.

11.8.2 Sources of Illumination.

11.8.2.1* Illumination of means of egress shall be from a source considered reliable by the authority having jurisdiction.

11.8.2.2 Battery-operated electric lights and other types of portable lamps or lanterns shall not be used for primary illumination of means of egress. Battery-operated electric lights shall be permitted to be used as an emergency source to the extent permitted under Section 11.9.

11.9 Emergency Lighting.

11.9.1 General.

11.9.1.1* Emergency lighting facilities for means of egress shall be provided in accordance with Section 11.9 for the following:

(1) Buildings or structures where required in Chapters 16 through 30
(2) Underground and limited-access structures as addressed in Chapter 30
(3) High-rise buildings as required by other sections of this *Code*
(4) Doors equipped with delayed-egress locks
(5) Stair shaft and vestibule of smokeproof enclosures, for which the following also apply:
    (a) The stair shaft and vestibule shall be permitted to include a standby generator that is installed for the smokeproof enclosure mechanical ventilation equipment.
    (b) The standby generator shall be permitted to be used for the stair shaft and vestibule emergency lighting power supply.
(6) Access-controlled egress doors in accordance with 11.2.1.6.2

11.9.1.2 For the purposes of 11.9.1.1, exit access shall include only designated stairs, aisles, corridors, ramps, escalators, and passageways leading to an exit. Exit discharge shall include only designated stairs, ramps, aisles, walkways, and escalators leading to a public way.

11.9.1.3 Where maintenance of illumination depends on changing from one energy source to another, a delay of not more than 10 seconds shall be permitted.

11.9.2 Performance of System.

11.9.2.1* Emergency illumination shall be provided for not less than 1½ hours in the event of failure of normal lighting. Emergency lighting facilities shall be arranged to provide initial illumination that is not less than an average of 1 ft-candle (10.8 lux) and, at any point, not less than 0.1 ft-candle (1.1 lux), measured along the path of egress at floor level. Illumination levels shall be permitted to decline to not less than an average of 0.6 ft-candle (6.5 lux) and, at any point, not less than 0.06 ft-candle (0.65 lux) at the end of the required 1½ hours. A maximum-to-minimum illumination uniformity ratio of 40 to 1 shall not be exceeded.

11.9.2.2 New emergency power systems for emergency lighting shall be at least Type 10, Class 1.5, Level 1 in accordance with NFPA 110.

11.9.2.3* The emergency lighting system shall be arranged to provide the required illumination automatically in the event of any interruption of normal lighting due to any of the following:

(1) Failure of a public utility or other outside electrical power supply
(2) Opening of a circuit breaker or fuse
(3) Manual act(s), including accidental opening of a switch controlling normal lighting facilities

11.9.2.4 Emergency generators providing power to emergency lighting systems shall be installed and tested in accordance with NFPA 110. Stored electrical energy systems, where required in this *Code*, shall be installed and tested in accordance with NFPA 111, *Standard on Stored Electrical Energy Emergency and Standby Power Systems.*

11.9.2.5 Unit equipment and battery systems for emergency luminaires shall be listed to UL 924, *Emergency Lighting and Power Equipment.*

11.9.2.6 The emergency lighting system shall be either continuously in operation or shall be capable of repeated automatic operation without manual intervention.

11.10 Marking of Means of Egress.

11.10.1 General.

11.10.1.1 Where Required. Means of egress shall be marked in accordance with Section 11.10 where required in Chapters 16 through 30.

11.10.1.2* Exits. Exits, other than main exterior exit doors that obviously and clearly are identifiable as exits, shall be marked by an approved sign that is readily visible from any direction of exit access.

11.10.1.3 Exit Door Tactile Signage. Tactile signage shall be located at each exit door requiring an exit sign, shall comply with ICC/ANSI A117.1, and shall read as follows:

EXIT

11.10.1.4* Exit Access. Access to exits shall be marked by approved, readily visible signs in all cases where the exit or way to reach the exit is not readily apparent to occupants. Sign place-

Copyright National Fire Protection Association
Provided by IHS under license with NFPA
No reproduction or networking permitted without license from IHS
Not for Resale

ment shall be such that no point in an exit access corridor is more than the rated viewing distance or 100 ft (30 m), whichever is less, from the nearest sign.

11.10.1.5* Floor Proximity Exit Signs. Where floor proximity exit signs are required in Chapters 16 through 30, signs shall be placed near the floor level in addition to those signs required for doors or corridors. Such signs shall be illuminated in accordance with 11.10.5. Externally illuminated signs shall be sized in accordance with 11.10.6.1. The bottom of the sign shall be not less than 6 in. (150 mm), but not more than 18 in. (455 mm), above the floor. For exit doors, the sign shall be mounted on the door, or adjacent to the door, with the nearest edge of the sign within 4 in. (100 mm) of the door frame.

11.10.1.6* Floor Proximity Egress Path Marking. Where floor proximity egress path marking is required in Chapters 16 through 30, a listed and approved floor proximity egress path marking system that is internally illuminated shall be installed within 18 in. (455 mm) of the floor. The system shall provide a visible delineation of the path of travel along the designated exit access and shall be essentially continuous, except as interrupted by doorways, hallways, corridors, or other such architectural features. The system shall operate continuously or at any time the building fire alarm system is activated. The activation, duration, and continuity of operation of the system shall be in accordance with 11.9.2.

11.10.1.7 Egress Marking Location. Egress markings shall be located at a vertical distance of not more than 6 ft 8 in. (2030 mm), measured from above the top edge of the egress opening intended for designation by that marking to the bottom of the marking. Egress markings shall be located at a horizontal distance of not more than the required width of the egress opening, as measured from the edge of the egress opening intended for designation by that marking to the nearest edge of the marking.

11.10.1.8* Visibility. Every sign required in Section 11.10 shall be located and of such size, distinctive color, and design that it is readily visible and shall provide contrast with decorations, interior finish, or other signs. No decorations, furnishings, or equipment that impairs the visibility of a sign shall be permitted. No brightly illuminated sign (for other than exit purposes), display, or object in or near the line of vision of the required exit sign that could detract attention from the exit sign shall be permitted.

11.10.2* Directional Signs. A sign complying with 11.10.3 with a directional indicator showing the direction of travel shall be placed in every location where the direction of travel to reach the nearest exit is not apparent.

11.10.3* Sign Legend.

11.10.3.1 Signs required by 11.10.1 and 11.10.2 shall display the word EXIT or other appropriate wording in plainly legible letters.

11.10.3.2 Where approved by the authority having jurisdiction, pictograms shall be permitted.

11.10.4* Power Source. Where emergency lighting facilities are required by the applicable provisions of Chapters 16 through 30 for individual occupancies, the signs, other than approved self-luminous signs and listed photoluminescent signs in accordance with 11.10.7, shall be illuminated by the emergency lighting facilities. The level of illumination of the signs shall be in accordance with 11.10.6.3 or 11.10.7 for the required emergency lighting duration, as specified in 11.9.2.1. However, the level of illumination shall be permitted to decline to 60 percent at the end of the emergency lighting duration.

11.10.5 Illumination of Signs.

11.10.5.1* General. Every sign required by 11.10.1.2, 11.10.1.4, or 11.10.8.1, other than signs in locations where operations or processes require low lighting levels, shall be suitably illuminated by a reliable light source. Externally and internally illuminated signs shall be legible in both the normal and emergency lighting mode.

11.10.5.2* Continuous Illumination.

11.10.5.2.1 Every sign required to be illuminated by 11.10.6.3, 11.10.7, and 11.10.8.1 shall be continuously illuminated as required under the provisions of Section 11.8, unless otherwise provided in 11.10.5.2.2.

11.10.5.2.2* Illumination for signs shall be permitted to flash on and off upon activation of the fire alarm system.

11.10.6 Externally Illuminated Signs.

11.10.6.1* Size of Signs.

11.10.6.1.1 Externally illuminated signs required by 11.10.1 and 11.10.2, unless otherwise provided in 11.10.6.1.2 and 11.10.6.1.3, shall have the word EXIT or other appropriate wording in plainly legible letters sized as follows:

(1) The letters shall be not less than 6 in. (150 mm) high, with the principal strokes of letters not less than ¾ in. (19 mm) wide.
(2) The word EXIT shall be in letters of a width not less than 2 in. (51 mm), except the letter I, and the minimum spacing between letters shall be not less than ⅜ in. (9.5 mm).
(3) Sign legend elements larger than the minimum established in 11.10.6.1.1(1) and (2) shall have letter widths, strokes, and spacing in proportion to their height.

11.10.6.1.2 The requirement of 11.10.6.1 shall not apply to marking required by 11.10.1.3 and 11.10.1.5.

11.10.6.1.3 Where approved by the authority having jurisdiction, pictograms shall be permitted.

11.10.6.2* Size and Location of Directional Indicator.

11.10.6.2.1 The directional indicator shall be located outside of the exit legend, not less than ⅜ in. (9.5 mm) from any letter.

11.10.6.2.2 The directional indicator shall be of a chevron type, as shown in Figure 11.10.6.2.2.

11.10.6.2.3 The directional indicator shall be identifiable as a directional indicator at a distance of 40 ft (12 m).



FIGURE 11.10.6.2.2 Chevron-Type Indicator.

Copyright National Fire Protection Association
Provided by IHS under license with NFPA
No reproduction or networking permitted without license from IHS
Not for Resale

11.10.6.2.4 A directional indicator larger than the minimum needed to satisfy the requirement of 11.10.6.2.3 shall be proportionately increased in height, width, and stroke.

11.10.6.2.5 The directional indicator shall be located at the end of the sign for the direction indicated.

11.10.6.3* Level of Illumination. Externally illuminated signs shall be illuminated by not less than 5 ft-candles (54 lux) at the illuminated surface and shall have a contrast ratio of not less than 0.5.

11.10.7 Internally Illuminated Signs.

11.10.7.1 Listing. Internally illuminated signs shall be listed in accordance with UL 924, unless the signs are in accordance with 11.10.1.3 or 11.10.1.5.

11.10.7.2* Photoluminescent Signs. The face of a photoluminescent sign shall be continually illuminated while the building is occupied. The illumination levels on the face of the photoluminescent sign shall be in accordance with its listing. The charging illumination shall be a reliable light source, as determined by the authority having jurisdiction. The charging light source shall be of a type specified in the product markings.

11.10.8 Special Signs.

11.10.8.1 Sign Illumination. Where required by other provisions of this *Code*, special signs shall be illuminated in accordance with 11.10.5, 11.10.6.3, and 11.10.7. Where emergency lighting facilities are required by the applicable provisions of Chapters 16 through 30, the required illumination of special signs shall additionally be provided under emergency lighting conditions.

11.10.8.2 Characters. Special signs, where required by other provisions of this *Code*, shall comply with the visual character requirements of ICC/ANSI A117.1.

11.10.8.3* No Exit.

11.10.8.3.1 Any door, passage, or stairway that is neither an exit nor a way of exit access and that is located or arranged so that it is likely to be mistaken for an exit shall be identified by a sign that reads as follows:

NO

EXIT

11.10.8.3.2 Such sign shall comply with 11.10.8.2 and have the word NO in letters 2 in. (51 mm) high and the word EXIT in letters 1 in. (25 mm) high, with the word EXIT below the word NO.

11.10.8.4 Elevator Signs. Elevators that are a part of a means of egress *(see 11.2.13.1)* shall have the following signs, with a minimum letter height of ⅝ in. (16 mm), in every elevator lobby:

(1)*Signs that indicate that the elevator can be used for egress, including any restrictions on use
(2)*Signs that indicate the operational status of elevators

11.11 Special Provisions for Occupancies with High Hazard Contents. See Sections 6.3 and 6.4 and Chapter 34.

11.12 Mechanical Equipment Rooms, Boiler Rooms, and Furnace Rooms.

11.12.1 Mechanical equipment rooms, boiler rooms, furnace rooms, and similar spaces shall be arranged to limit common path of travel to a distance not exceeding 50 ft (15 m), unless otherwise provided in 11.12.2.

11.12.2 A common path of travel not exceeding 100 ft (30 m) shall be permitted in the following locations:

(1) In buildings protected throughout by an approved, electrically supervised automatic sprinkler system in accordance with Section 55.3
(2) In mechanical equipment rooms with no fuel-fired equipment

11.12.3 Stories used exclusively for mechanical equipment, furnaces, or boilers shall be permitted to have a single means of egress where the travel distance to an exit on that story is not in excess of the common path of travel limitations of 11.12.1 and 11.12.2.

Chapter 12 Accessibility

12.1 Application. [**ADA/ABA-AG:** 201]
Note: This chapter is extracted from "ADA and ABA Accessibility Guidelines for Buildings," which was published in the Federal Register on July 23, 2004, by the U.S. Access Board. The number in brackets at the end of each paragraph refers to the paragraph number of the source document.

12.1.1 Scope. All areas of newly designed and newly constructed buildings and facilities and altered portions of existing buildings and facilities shall comply with these requirements. [**ADA/ABA-AG:** 201.1]

12.1.2 Application Based on Building or Facility Use. Where a site, building, facility, room, or space contains more than one use, each portion shall comply with the applicable requirements for that use. [**ADA/ABA-AG:** 201.2]

12.1.3 Temporary and Permanent Structures. These requirements shall apply to temporary and permanent buildings and facilities. [**ADA/ABA-AG:** 201.3]

12.2 Existing Buildings and Facilities. [**ADA/ABA-AG:** 202]

12.2.1 General. Additions and alterations to existing buildings or facilities shall comply with Section 12.2. [**ADA/ABA-AG:** 202.1]

12.2.2 Additions. Each addition to an existing building or facility shall comply with the requirements for new construction. Each addition that affects or could affect the usability of or access to an area containing a primary function shall comply with 12.2.4. [**ADA/ABA-AG:** 202.2]

12.2.3 Alterations. Where existing elements or spaces are altered, each altered element or space shall comply with the applicable requirements of this chapter. [**ADA/ABA-AG:** 202.3]

*Exception No. 1: Unless required by 12.2.4, where elements or spaces are altered and the circulation path to the altered element or space is not altered, an accessible route shall not be required. [**ADA/ABA-AG:** 202.3, Exception 1]*

*Exception No. 2: In alterations, where compliance with applicable requirements is technically infeasible, the alteration shall comply with the requirements to the maximum extent feasible. [**ADA/ABA-AG:** 202.3, Exception 2]*

Exception No. 3: Residential dwelling units not required to be accessible in compliance with a standard issued pursuant to the Americans

Copyright National Fire Protection Association
Provided by IHS under license with NFPA
No reproduction or networking permitted without license from IHS
Not for Resale

*with Disabilities Act or Section 504 of the Rehabilitation Act of 1973, as amended, shall not be required to comply with 12.2.3. [**ADA/ABA-AG:** 202.3, Exception 3]*

12.2.3.1 Prohibited Reduction in Access. An alteration that decreases or has the effect of decreasing the accessibility of a building or facility below the requirements for new construction at the time of the alteration shall be prohibited. [**ADA/ABA-AG:** 202.3.1]

12.2.3.2 Extent of Application. An alteration of an existing element, space, or area of a building or facility shall not impose a requirement for accessibility greater than required for new construction. [**ADA/ABA-AG:** 202.3.2]

12.2.4 Alterations Affecting Primary Function Areas. In addition to the requirements of 12.2.3, an alteration that affects or could affect the usability of or access to an area containing a primary function shall be made so as to ensure that, to the maximum extent feasible, the path of travel to the altered area, including the rest rooms, telephones, and drinking fountains serving the altered area, are readily accessible to and usable by individuals with disabilities, unless such alterations are disproportionate to the overall alterations in terms of cost and scope as determined under criteria established by the Attorney General. In existing transportation facilities, an area of primary function shall be as defined under regulations published by the Secretary of the Department of Transportation or the Attorney General. [**ADA/ABA-AG:** 202.4]

*Exception: Residential dwelling units shall not be required to comply with 12.2.4. [**ADA/ABA-AG:** 202.4, Exception]*

12.2.5 Alterations to Qualified Historic Buildings and Facilities. Alterations to a qualified historic building or facility shall comply with 12.2.3 and 12.2.4. [**ADA/ABA-AG:** 202.5]

*Exception: Where the State Historic Preservation Officer or Advisory Council on Historic Preservation determines that compliance with the requirements for accessible routes, entrances, or toilet facilities would threaten or destroy the historic significance of the building or facility, the exceptions for alterations to qualified historic buildings or facilities for that element shall be permitted to apply. [**ADA/ABA-AG:** 202.5, Exception]*

12.3 General Exceptions. [**ADA/ABA-AG:** 203]

12.3.1 General. Sites, buildings, facilities, and elements are exempt from these requirements to the extent specified by Section 12.3. [**ADA/ABA-AG:** 203.1]

12.3.2 Construction Sites. Structures and sites directly associated with the actual processes of construction, including but not limited to, scaffolding, bridging, materials hoists, materials storage, and construction trailers shall not be required to comply with these requirements or to be on an accessible route. Portable toilet units provided for use exclusively by construction personnel on a construction site shall not be required to comply with Section 12.13 or to be on an accessible route. [**ADA/ABA-AG:** 203.2]

12.3.3 Raised Areas. Areas raised primarily for purposes of security, life safety, or fire safety, including but not limited to, observation or lookout galleries, prison guard towers, fire towers, or life guard stands shall not be required to comply with these requirements or to be on an accessible route. [**ADA/ABA-AG:** 203.3]

12.3.4 Limited Access Spaces. Spaces accessed only by ladders, catwalks, crawl spaces, or very narrow passageways shall not be required to comply with these requirements or to be on an accessible route. [**ADA/ABA-AG:** 203.4]

12.3.5 Machinery Spaces. Spaces frequented only by service personnel for maintenance, repair, or occasional monitoring of equipment shall not be required to comply with these requirements or to be on an accessible route. Machinery spaces include, but are not limited to, elevator pits or elevator penthouses; mechanical, electrical or communications equipment rooms; piping or equipment catwalks; water or sewage treatment pump rooms and stations; electric substations and transformer vaults; and highway and tunnel utility facilities. [**ADA/ABA-AG:** 203.5]

12.3.6 Single Occupant Structures. Single occupant structures accessed only by passageways below grade or elevated above standard curb height, including but not limited to, toll booths that are accessed only by underground tunnels, shall not be required to comply with these requirements or to be on an accessible route. [**ADA/ABA-AG:** 203.6]

12.3.7 Detention and Correctional Facilities. In detention and correctional facilities, common use areas that are used only by inmates or detainees and security personnel and that do not serve holding cells or housing cells required to comply with Section 12.32, shall not be required to comply with these requirements or to be on an accessible route. [**ADA/ABA-AG:** 203.7]

12.3.8 Residential Facilities. In residential facilities, common use areas that do not serve residential dwelling units required to provide mobility features complying with 12.45.5.2 through 12.45.5.5 shall not be required to comply with these requirements or to be on an accessible route. [**ADA/ABA-AG:** 203.8]

12.3.9 Employee Work Areas. Spaces and elements within employee work areas shall only be required to comply with 12.6.2.8, 12.7, and 12.15.3 and shall be designed and constructed so that individuals with disabilities can approach, enter, and exit the employee work area. Employee work areas, or portions of employee work areas, that are less than 300 ft^2 (28 m^2) and elevated 7 in. (180 mm) or more above the finish floor or ground where the elevation is essential to the function of the space shall not be required to comply with these requirements or to be on an accessible route. [**ADA/ABA-AG:** 203.9]

12.3.10 Raised Refereeing, Judging, and Scoring Areas. Raised structures used solely for refereeing, judging, or scoring a sport shall not be required to comply with these requirements or to be on an accessible route. [**ADA/ABA-AG:** 203.10]

12.3.11 Water Slides. Water slides shall not be required to comply with these requirements or to be on an accessible route. [**ADA/ABA-AG:** 203.11]

12.3.12 Animal Containment Areas. Animal containment areas that are not for public use shall not be required to comply with these requirements or to be on an accessible route. [**ADA/ABA-AG:** 203.12]

12.3.13 Raised Boxing or Wrestling Rings. Raised boxing or wrestling rings shall not be required to comply with these requirements or to be on an accessible route. [**ADA/ABA-AG:** 203.13]

12.3.14 Raised Diving Boards and Diving Platforms. Raised diving boards and diving platforms shall not be required to comply with these requirements or to be on an accessible route. [**ADA/ABA-AG:** 203.14]

Copyright National Fire Protection Association
Provided by IHS under license with NFPA
No reproduction or networking permitted without license from IHS
Not for Resale

12.4 Protruding Objects. [**ADA/ABA-AG:** 204]

12.4.1 General. Protruding objects on circulation paths shall comply with ICC/ANSI A117.1, *American National Standard for Accessible and Usable Buildings and Facilities*, Section 307. [**ADA/ABA-AG:** 204.1]

*Exception No. 1: Within areas of sport activity, protruding objects on circulation paths shall not be required to comply with ICC/ANSI A117.1, Section 307. [**ADA/ABA-AG:** 204.1, Exception 1]*

*Exception No. 2: Within play areas, protruding objects on circulation paths shall not be required to comply with ICC/ANSI A117.1, Section 307 provided that ground level accessible routes provide vertical clearance in compliance with 12.45.14.2. [**ADA/ABA-AG:** 204.1, Exception 2]*

12.5 Operable Parts. [**ADA/ABA-AG:** 205] Operable parts on accessible elements, accessible routes, and in accessible rooms and spaces shall comply with ICC/ANSI A117.1, Section 309. [**ADA/ABA-AG:** 205.1]

*Exception No. 1: Operable parts that are intended for use only by service or maintenance personnel shall not be required to comply with ICC/ANSI A117.1, Section 309. [**ADA/ABA-AG:** 205.1, Exception 1]*

*Exception No. 2: Electrical or communication receptacles serving a dedicated use shall not be required to comply with ICC/ANSI A117.1, Section 309. [**ADA/ABA-AG:** 205.1, Exception 2]*

*Exception No. 3: Where two or more outlets are provided in a kitchen above a length of counter top that is uninterrupted by a sink or appliance, one outlet shall not be required to comply with ICC/ANSI A117.1, Section 309. [**ADA/ABA-AG:** 205.1, Exception 3]*

*Exception No. 4: Floor electrical receptacles shall not be required to comply with ICC/ANSI A117.1, Section 309. [**ADA/ABA-AG:** 205.1, Exception 4]*

*Exception No. 5: HVAC diffusers shall not be required to comply with ICC/ANSI A117.1, Section 309. [**ADA/ABA-AG:** 205.1, Exception 5]*

*Exception No. 6: Except for light switches, where redundant controls are provided for a single element, one control in each space shall not be required to comply with ICC/ANSI A117.1, Section 309. [**ADA/ABA-AG:** 205.1, Exception 6]*

*Exception No. 7: Cleats and other boat securement devices shall not be required to comply with ICC/ANSI A117.1, Section 309.3. [**ADA/ABA-AG:** 205.1, Exception 7]*

*Exception No. 8: Exercise machines and exercise equipment shall not be required to comply with ICC/ANSI A117.1, Section 309. [**ADA/ABA-AG:** 205.1, Exception 8]*

12.6 Accessible Routes. [**ADA/ABA-AG:** 206]

12.6.1 General. Accessible routes shall be provided in accordance with Section 12.6 and shall comply with ICC/ANSI A117.1, Chapter 4. [**ADA/ABA-AG:** 206.1]

12.6.2 Where Required. Accessible routes shall be provided where required by 12.6.2. [**ADA/ABA-AG:** 206.2]

12.6.2.1 Site Arrival Points. At least one accessible route shall be provided within the site from accessible parking spaces and accessible passenger loading zones; public streets and sidewalks; and public transportation stops to the accessible building or facility entrance they serve. [**ADA/ABA-AG:** 206.2.1]

*Exception No. 1: Where exceptions for alterations to qualified historic buildings or facilities are permitted by 12.2.5, no more than one accessible route from a site arrival point to an accessible entrance shall be required. [**ADA/ABA-AG:** 206.2.1, Exception 1]*

*Exception No. 2: In other than lodging or rooming house and apartment building occupancies, an accessible route shall not be required between site arrival points and the building or facility entrance if the only means of access between them is a vehicular way not providing pedestrian access. [**ADA/ABA-AG:** 206.2.1, Exception 2]*

12.6.2.2 Within a Site. At least one accessible route shall connect accessible buildings, accessible facilities, accessible elements, and accessible spaces that are on the same site. [**ADA/ABA-AG:** 206.2.2]

*Exception: In other than lodging or rooming house and apartment building occupancies, an accessible route shall not be required between accessible buildings, accessible facilities, accessible elements, and accessible spaces if the only means of access between them is a vehicular way not providing pedestrian access. [**ADA/ABA-AG:** 206.2.2, Exception]*

12.6.2.3 Multi-Story Buildings and Facilities.

12.6.2.3.1 General. At least one accessible route shall connect each story and mezzanine in multi-story buildings and facilities. [**ADA/ABA-AG:** 206.2.3]

*Exception No. 1: In private buildings or facilities that are less than three stories or that have less than 3000 ft^2 (279 m^2) per story, an accessible route shall not be required to connect stories provided that the building or facility is not a shopping center, a shopping mall, the professional office of a health care provider, a terminal, depot, or other station used for specified public transportation, an airport passenger terminal, or another type of facility as determined by the Attorney General. [**ADA/ABA-AG:** 206.2.3, Exception 1]*

*Exception No. 2: Where a two story public building or facility has one story with an occupant load of five or fewer persons that does not contain public use space, that story shall not be required to be connected to the story above or below. [**ADA/ABA-AG:** 206.2.3, Exception 2]*

*Exception No. 3: In detention and correctional facilities, an accessible route shall not be required to connect stories where cells with mobility features required to comply with 12.45.4.2, all common use areas serving cells with mobility features required to comply with 12.45.4.2, and all public use areas are on an accessible route. [**ADA/ABA-AG:** 206.2.3, Exception 3]*

*Exception No. 4: In residential facilities, an accessible route shall not be required to connect stories where residential dwelling units with mobility features required to comply with 12.45.5.3 through 12.45.5.6.6.2, all common use areas serving residential dwelling units with mobility features required to comply with 12.45.5.3 through 12.45.5.6.6.2, and public use areas serving residential dwelling units are on an accessible route. [**ADA/ABA-AG:** 206.2.3, Exception 4]*

*Exception No. 5: Within multi-story transient lodging guest rooms with mobility features required to comply with 12.45.3.2, an accessible route shall not be required to connect stories provided that spaces complying with 12.45.3.2 are on an accessible route and sleeping accommodations for two persons minimum are provided on a story served by an accessible route. [**ADA/ABA-AG:** 206.2.3, Exception 5]*

*Exception No. 6: In air traffic control towers an accessible route shall not be required to serve the cab and the floor immediately below the cab. [**ADA/ABA-AG:** 206.2.3, Exception 6]*

*Exception No. 7: Where exceptions for alterations to qualified historic buildings or facilities are permitted by 12.2.5, an accessible route shall not be required to stories located above or below the accessible story. [**ADA/ABA-AG:** 206.2.3, Exception 7]*

Copyright National Fire Protection Association
Provided by IHS under license with NFPA
No reproduction or networking permitted without license from IHS
Not for Resale

12.6.2.3.2 Stairs and Escalators in Existing Buildings. In alterations and additions, where an escalator or stair is provided where none existed previously and major structural modifications are necessary for the installation, an accessible route shall be provided between the levels served by the escalator or stair unless exempted by 12.6.2.3 Exception No. 1 through Exception No. 7. [**ADA/ABA-AG:** 206.2.3.1]

12.6.2.4 Spaces and Elements. At least one accessible route shall connect accessible building or facility entrances with all accessible spaces and elements within the building or facility which are otherwise connected by a circulation path unless exempted by 12.6.2.3 Exception No. 1 through Exception No. 7. [**ADA/ABA-AG:** 206.2.4]

*Exception No. 1: Raised courtroom stations, including judges' benches, clerks' stations, bailiffs' stations, deputy clerks' stations, and court reporters' stations shall not be required to provide vertical access provided that the required clear floor space, maneuvering space, and, if appropriate, electrical service are installed at the time of initial construction to allow future installation of a means of vertical access complying with ICC/ANSI A117.1, Sections 405, 407, 408 , or 410 without requiring substantial reconstruction of the space. [**ADA/ABA-AG:** 206.2.4, Exception 1]*

*Exception No. 2: In assembly areas with fixed seating required to comply with Section 12.21, an accessible route shall not be required to serve fixed seating where wheelchair spaces required to be on an accessible route are not provided. [**ADA/ABA-AG:** 206.2.4, Exception 2]*

*Exception No. 3: Accessible routes shall not be required to connect mezzanines where buildings or facilities have no more than one story. In addition, accessible routes shall not be required to connect stories or mezzanines where multi-story buildings or facilities are exempted by 12.6.2.3 Exception No. 1 through Exception No. 7. [**ADA/ABA-AG:** 206.2.4, Exception 3]*

12.6.2.5 Restaurants and Cafeterias. In restaurants and cafeterias, an accessible route shall be provided to all dining areas, including raised or sunken dining areas, and outdoor dining areas. [**ADA/ABA-AG:** 206.2.5]

*Exception No. 1: In buildings or facilities not required to provide an accessible route between stories, an accessible route shall not be required to a mezzanine dining area where the mezzanine contains less than 25 percent of the total combined area for seating and dining and where the same decor and services are provided in the accessible area. [**ADA/ABA-AG:** 206.2.5, Exception 1]*

*Exception No. 2: In alterations, an accessible route shall not be required to existing raised or sunken dining areas, or to all parts of existing outdoor dining areas where the same services and decor are provided in an accessible space usable by the public and not restricted to use by people with disabilities. [**ADA/ABA-AG:** 206.2.5, Exception 2]*

*Exception No. 3: In sports facilities, tiered dining areas providing seating required to comply with Section 12.21 shall be required to have accessible routes serving at least 25 percent of the dining area provided that accessible routes serve seating complying with Section 12.21 and each tier is provided with the same services. [**ADA/ABA-AG:** 206.2.5, Exception 3]*

12.6.2.6 Performance Areas. Where a circulation path directly connects a performance area to an assembly seating area, an accessible route shall directly connect the assembly seating area with the performance area. An accessible route shall be provided from performance areas to ancillary areas or facilities used by performers unless exempted by 12.6.2.3 Exception No. 1 through Exception No. 7. [**ADA/ABA-AG:** 206.2.6]

12.6.2.7 Press Boxes. Press boxes in assembly areas shall be on an accessible route. [**ADA/ABA-AG:** 206.2.7]

*Exception No. 1: An accessible route shall not be required to press boxes in bleachers that have points of entry at only one level provided that the aggregate area of all press boxes is 500 ft^2 (46 m^2) maximum. [**ADA/ABA-AG:** 206.2.7, Exception 1]*

*Exception No. 2: An accessible route shall not be required to free-standing press boxes that are elevated above grade 12 ft (3660 mm) minimum provided that the aggregate area of all press boxes is 500 ft^2 (46 m^2) maximum. [**ADA/ABA-AG:** 206.2.7, Exception 2]*

12.6.2.8 Employee Work Areas. Common use circulation paths within employee work areas shall comply with ICC/ANSI A117.1, Section 402. [**ADA/ABA-AG:** 206.2.8]

*Exception No. 1: Common use circulation paths located within employee work areas that are less than 1000 ft^2 (93 m^2) and defined by permanently installed partitions, counters, casework, or furnishings shall not be required to comply with ICC/ANSI A117.1, Section 402. [**ADA/ABA-AG:** 206.2.8, Exception 1]*

*Exception No. 2: Common use circulation paths located within employee work areas that are an integral component of work area equipment shall not be required to comply with ICC/ANSI A117.1, Section 402. [**ADA/ABA-AG:** 206.2.8, Exception 2]*

*Exception No. 3: Common use circulation paths located within exterior employee work areas that are fully exposed to the weather shall not be required to comply with ICC/ANSI A117.1, Section 402. [**ADA/ABA-AG:** 206.2.8, Exception 3]*

12.6.2.9 Amusement Rides. Amusement rides required to comply with Section 12.34 shall provide accessible routes in accordance with 12.6.2.9. Accessible routes serving amusement rides shall comply with ICC/ANSI A117.1 Chapter 4 except as modified by 12.45.8.2.2. [**ADA/ABA-AG:** 206.2.9]

12.6.2.9.1 Load and Unload Areas. Load and unload areas shall be on an accessible route. Where load and unload areas have more than one loading or unloading position, at least one loading and unloading position shall be on an accessible route. [**ADA/ABA-AG:** 206.2.9.1]

12.6.2.9.2 Wheelchair Spaces, Ride Seats Designed for Transfer, and Transfer Devices. When amusement rides are in the load and unload position, wheelchair spaces complying with 12.45.8.2.4, amusement ride seats designed for transfer complying with 12.45.8.2.5, and transfer devices complying with 12.45.8.2.6 shall be on an accessible route. [**ADA/ABA-AG:** 206.2.9.2]

12.6.2.10 Recreational Boating Facilities. Boat slips required to comply with 12.35.2 and boarding piers at boat launch ramps required to comply with 12.35.3 shall be on an accessible route. Accessible routes serving recreational boating facilities shall comply with ICC/ANSI A117.1 Chapter 4, except as modified by 12.45.9.2. [**ADA/ABA-AG:** 206.2.10]

12.6.2.11 Bowling Lanes. Where bowling lanes are provided, at least 5 percent, but no fewer than one of each type of bowling lane, shall be on an accessible route. [**ADA/ABA-AG:** 206.2.11]

12.6.2.12 Court Sports. In court sports, at least one accessible route shall directly connect both sides of the court. [**ADA/ABA-AG:** 206.2.12]

Copyright National Fire Protection Association
Provided by IHS under license with NFPA
No reproduction or networking permitted without license from IHS
Not for Resale

12.6.2.13 Exercise Machines and Equipment. Exercise machines and equipment required to comply with 12.36 shall be on an accessible route. [**ADA/ABA-AG:** 206.2.13]

12.6.2.14 Fishing Piers and Platforms. Fishing piers and platforms shall be on an accessible route. Accessible routes serving fishing piers and platforms shall comply with ICC/ANSI A117.1 except as modified by 12.45.11.1. [**ADA/ABA-AG:** 206.2.14]

12.6.2.15 Golf Facilities. At least one accessible route shall connect accessible elements and spaces within the boundary of the golf course. In addition, accessible routes serving golf car rental areas; bag drop areas; course weather shelters complying with 12.38.1.3; course toilet rooms; and practice putting greens, practice teeing grounds, and teeing stations at driving ranges complying with 12.38.2 shall comply with ICC/ANSI A117.1 except as modified by 12.45.13.2. [**ADA/ABA-AG:** 206.2.15]

*Exception: Golf car passages complying with 12.45.12.3 shall be permitted to be used for all or part of accessible routes required by 12.6.2.15. [**ADA/ABA-AG:** 206.2.15, Exception]*

12.6.2.16 Miniature Golf Facilities. Holes required to comply with 12.39.2, including the start of play, shall be on an accessible route. Accessible routes serving miniature golf facilities shall comply with ICC/ANSI A117.1 except as modified by 12.45.13.2. [**ADA/ABA-AG:** 206.2.16]

12.6.2.17 Play Areas. Play areas shall provide accessible routes in accordance with 12.6.2.17. Accessible routes serving play areas shall comply with ICC/ANSI A117.1 except as modified by 12.45.14.2. [**ADA/ABA-AG:** 206.2.17]

12.6.2.17.1 Ground Level and Elevated Play Components. At least one accessible route shall be provided within the play area. The accessible route shall connect ground level play components required to comply with 12.40.2.1 and elevated play components required to comply with 12.40.2.2, including entry and exit points of the play components. [**ADA/ABA-AG:** 206.2.17.2]

12.6.2.17.2 Soft Contained Play Structures. Where three or fewer entry points are provided for soft contained play structures, at least one entry point shall be on an accessible route. Where four or more entry points are provided for soft contained play structures, at least two entry points shall be on an accessible route. [**ADA/ABA-AG:** 206.2.17.2]

12.6.3 Location. Accessible routes shall coincide with or be located in the same area as general circulation paths. Where circulation paths are interior, required accessible routes shall also be interior. [**ADA/ABA-AG:** 206.3]

12.6.4 Entrances. Entrances shall be provided in accordance with 12.6.4. Entrance doors, doorways, and gates shall comply with ICC/ANSI A117.1, Section 404 and shall be on an accessible route complying with ICC/ANSI A117.1, Section 402. [**ADA/ABA-AG:** 206.4]

*Exception No. 1: Where an alteration includes alterations to an entrance, and the building or facility has another entrance complying with ICC/ANSI A117.1, Section 404 that is on an accessible route, the altered entrance shall not be required to comply with 12.6.4 unless required by 12.2.4. [**ADA/ABA-AG:** 206.4, Exception 1]*

*Exception No. 2: Where exceptions for alterations to qualified historic buildings or facilities are permitted by 12.2.5, no more than one public entrance shall be required to comply with 12.6.4. Where no public entrance can comply with 12.6.4 under criteria established in 12.2.5 Exception, then either an unlocked entrance not used by the public shall comply with 12.6.4; or a locked entrance complying with 12.6.4 with a notification system or remote monitoring shall be provided. [**ADA/ABA-AG:** 206.4, Exception 2]*

12.6.4.1 Public Entrances. In addition to entrances required by 12.6.4.2 through 12.6.4.9, at least 60 percent of all public entrances shall comply with ICC/ANSI A117.1, Section 404. [**ADA/ABA-AG:** 206.4.1]

12.6.4.2 Parking Structure Entrances. Where direct access is provided for pedestrians from a parking structure to a building or facility entrance, each direct access to the building or facility entrance shall comply with ICC/ANSI A117.1, Section 404. [**ADA/ABA-AG:** 206.4.2]

12.6.4.3 Entrances from Tunnels or Elevated Walkways. Where direct access is provided for pedestrians from a pedestrian tunnel or elevated walkway to a building or facility, at least one direct entrance to the building or facility from each tunnel or walkway shall comply with ICC/ANSI A117.1, Section 404. [**ADA/ABA-AG:** 206.4.3]

12.6.4.4 Transportation Facilities. In addition to the requirements of 12.6.4.2, 12.6.4.3, and 12.6.4.5 through 12.6.4.9, transportation facilities shall provide entrances in accordance with 12.6.4.4. [**ADA/ABA-AG:** 206.4.4]

12.6.4.4.1 Location. In transportation facilities, where different entrances serve different transportation fixed routes or groups of fixed routes, at least one public entrance shall comply with ICC/ANSI A117.1, Section 404. [**ADA/ABA-AG:** 206.4.4.1]

*Exception: Entrances to key stations and existing intercity rail stations retrofitted in accordance with 49 CFR 37.49 or 49 CFR 37.51 shall not be required to comply with 12.6.4.4.1. [**ADA/ABA-AG:** 206.4.4.1, Exception]*

12.6.4.4.2 Direct Connections. Direct connections to other facilities shall provide an accessible route complying with ICC/ANSI A117.1, Section 404 from the point of connection to boarding platforms and all transportation system elements required to be accessible. Any elements provided to facilitate future direct connections shall be on an accessible route connecting boarding platforms and all transportation system elements required to be accessible. [**ADA/ABA-AG:** 206.4.4.2]

*Exception: In key stations and existing intercity rail stations, existing direct connections shall not be required to comply with ICC/ANSI A117.1, Section 404. [**ADA/ABA-AG:** 206.4.4.2, Exception]*

12.6.4.4.3 Key Stations and Intercity Rail Stations. Key stations and existing intercity rail stations required by Subpart C of 49 CFR Part 37 to be altered, shall have at least one entrance complying with ICC/ANSI A117.1, Section 404. [**ADA/ABA-AG:** 206.4.4.3]

12.6.4.5 Tenant Spaces. At least one accessible entrance to each tenancy in a facility shall comply with ICC/ANSI A117.1, Section 404. [**ADA/ABA-AG:** 206.4.5]

*Exception: Self-service storage facilities not required to comply with 12.25.3 shall not be required to be on an accessible route. [**ADA/ABA-AG:** 206.4.5, Exception]*

12.6.4.6 Residential Dwelling Unit Primary Entrance. In residential dwelling units, at least one primary entrance shall comply with ICC/ANSI A117.1, Section 404. The primary

Copyright National Fire Protection Association
Provided by IHS under license with NFPA
No reproduction or networking permitted without license from IHS
Not for Resale

entrance to a residential dwelling unit shall not be to a bedroom. [**ADA/ABA-AG:** 206.4.6]

12.6.4.7 Restricted Entrances. Where restricted entrances are provided to a building or facility, at least one restricted entrance to the building or facility shall comply with ICC/ANSI A117.1, Section 404. [**ADA/ABA-AG:** 206.4.7]

12.6.4.8 Service Entrances. If a service entrance is the only entrance to a building or to a tenancy in a facility, that entrance shall comply with ICC/ANSI A117.1, Section 404. [**ADA/ABA-AG:** 206.4.8]

12.6.4.9 Entrances for Inmates or Detainees. Where entrances used only by inmates or detainees and security personnel are provided at judicial facilities, detention facilities, or correctional facilities, at least one such entrance shall comply with ICC/ANSI A117.1, Section 404. [**ADA/ABA-AG:** 206.4.9]

12.6.5 Doors, Doorways, and Gates. Doors, doorways, and gates providing user passage shall be provided in accordance with 12.6.5. [**ADA/ABA-AG:** 206.5]

12.6.5.1 Entrances. Each entrance to a building or facility required to comply with 12.6.4 shall have at least one door, doorway, or gate complying with ICC/ANSI A117.1, Section 404. [**ADA/ABA-AG:** 206.5.1]

12.6.5.2 Rooms and Spaces. Within a building or facility, at least one door, doorway, or gate serving each room or space complying with these requirements shall comply with ICC/ANSI A117.1, Section 404. [**ADA/ABA-AG:** 206.5.2]

12.6.5.3 Transient Lodging Facilities. In transient lodging facilities, entrances, doors, and doorways providing user passage into and within guest rooms that are not required to provide mobility features complying with 12.45.3.2 shall comply with ICC/ANSI A117.1, Section 404.2.3. [**ADA/ABA-AG:** 206.5.3]

*Exception: Shower and sauna doors in guest rooms that are not required to provide mobility features complying with 12.45.3.2 shall not be required to comply with ICC/ANSI A117.1, Section 404.2.3. [**ADA/ABA-AG:** 206.5.3, Exception]*

12.6.5.4 Residential Dwelling Units. In residential dwelling units required to provide mobility features complying with 12.45.5.2 through 12.45.5.5, all doors and doorways providing user passage shall comply with ICC/ANSI A117.1, Section 404. [**ADA/ABA-AG:** 206.5.4]

12.6.6 Elevators. Elevators provided for passengers shall comply with ICC/ANSI A117.1, Section 407. Where multiple elevators are provided, each elevator shall comply with ICC/ANSI A117.1, Section 407. [**ADA/ABA-AG:** 206.6]

*Exception No. 1: In a building or facility permitted to use the exceptions to 12.6.2.3 or permitted by 12.6.7 to use a platform lift, elevators complying with ICC/ANSI A117.1, Section 408 shall be permitted. [**ADA/ABA-AG:** 206.6, Exception 1]*

*Exception No. 2: Elevators complying with ICC/ANSI A117.1, Section 408 or Section 409 shall be permitted in multi-story residential dwelling units. [**ADA/ABA-AG:** 206.1, Exception 2]*

12.6.6.1 Existing Elevators. Where elements of existing elevators are altered, the same element shall also be altered in all elevators that are programmed to respond to the same hall call control as the altered elevator and shall comply with the requirements of ICC/ANSI A117.1, Section 407 for the altered element. [**ADA/ABA-AG:** 206.6.1]

12.6.7 Platform Lifts. Platform lifts shall comply with ICC/ANSI A117.1, Section 410. Platform lifts shall be permitted as a component of an accessible route in new construction in accordance with 12.6.7. Platform lifts shall be permitted as a component of an accessible route in an existing building or facility. [**ADA/ABA-AG:** 206.7]

12.6.7.1 Performance Areas and Speakers' Platforms. Platform lifts shall be permitted to provide accessible routes to performance areas and speakers' platforms. [**ADA/ABA-AG:** 206.7.1]

12.6.7.2 Wheelchair Spaces. Platform lifts shall be permitted to provide an accessible route to comply with the wheelchair space dispersion and line-of-sight requirements of Section 12.21 and ICC/ANSI A117.1, Section 802. [**ADA/ABA-AG:** 206.7.2]

12.6.7.3 Incidental Spaces. Platform lifts shall be permitted to provide an accessible route to incidental spaces which are not public use spaces and which are occupied by five persons maximum. [**ADA/ABA-AG:** 206.7.3]

12.6.7.4 Judicial Spaces. Platform lifts shall be permitted to provide an accessible route to: jury boxes and witness stands; raised courtroom stations including, judges' benches, clerks' stations, bailiffs' stations, deputy clerks' stations, and court reporters' stations; and to depressed areas such as the well of a court. [**ADA/ABA-AG:** 206.7.4]

12.6.7.5 Existing Site Constraints. Platform lifts shall be permitted where existing exterior site constraints make use of a ramp or elevator infeasible. [**ADA/ABA-AG:** 206.7.5]

12.6.7.6 Guest Rooms and Residential Dwelling Units. Platform lifts shall be permitted to connect levels within transient lodging guest rooms required to provide mobility features complying with 12.45.3.2 or residential dwelling units required to provide mobility features complying with 12.45.5.2 through 12.45.5.5. [**ADA/ABA-AG:** 206.7.6]

12.6.7.7 Amusement Rides. Platform lifts shall be permitted to provide accessible routes to load and unload areas serving amusement rides. [**ADA/ABA-AG:** 206.7.7]

12.6.7.8 Play Areas. Platform lifts shall be permitted to provide accessible routes to play components or soft contained play structures. [**ADA/ABA-AG:** 206.7.8]

12.6.7.9 Team or Player Seating. Platform lifts shall be permitted to provide accessible routes to team or player seating areas serving areas of sport activity. [**ADA/ABA-AG:** 206.7.9]

12.6.7.10 Recreational Boating Facilities and Fishing Piers and Platforms. Platform lifts shall be permitted to be used instead of gangways that are part of accessible routes serving recreational boating facilities and fishing piers and platforms. [**ADA/ABA-AG:** 206.7.10]

12.6.8 Security Barriers. Security barriers including, but not limited to, security bollards and security check points, shall not obstruct a required accessible route or accessible means of egress. [**ADA/ABA-AG:** 206.6.8]

Exception: Where security barriers incorporate elements that cannot comply with these requirements such as certain metal detectors, fluoroscopes, or other similar devices, the accessible route shall be permitted to be located adjacent to security screening devices. The accessible route shall permit persons with disabilities passing around security barriers to maintain visual contact with their personal items to the same extent

--`,,```,,,,````-`-`,,`,,`,`,,`---
Copyright National Fire Protection Association
Provided by IHS under license with NFPA
No reproduction or networking permitted without license from IHS
Not for Resale

*provided others passing through the security barrier. [**ADA/ABA-AG:** 206.8, Exception]*

12.7 Accessible Means of Egress. [**ADA/ABA-AG:** 207] Means of egress shall comply with Section 11.5.4. [**ADA/ABA-AG:** 207.1]

*Exception No. 1: Where means of egress are permitted by local building or life safety codes to share a common path of egress travel, accessible means of egress shall be permitted to share a common path of egress travel. [**ADA/ABA-AG:** 207.1, Exception 1]*

*Exception No. 2: Areas of refuge shall not be required in detention and correctional facilities. [**ADA/ABA-AG:** 207.1, Exception 2]*

12.8 Parking Spaces. [**ADA/ABA-AG:** 208]

12.8.1 General. Where parking spaces are provided, parking spaces shall be provided in accordance with Section 12.8. [**ADA/ABA-AG:** 208.1]

*Exception: Parking spaces used exclusively for buses, trucks, other delivery vehicles, law enforcement vehicles, or vehicular impound shall not be required to comply with Section 12.8 provided that lots accessed by the public are provided with a passenger loading zone complying with ICC/ANSI A117.1, Section 503. [**ADA/ABA-AG:** 208.1, Exception]*

12.8.2 Minimum Number. Parking spaces complying with ICC/ANSI A117.1, Section 502 shall be provided in accordance with Table 12.8.2 except as required by 12.8.2.1, 12.8.2.2, and 12.8.2.3. Where more than one parking facility is provided on a site, the number of accessible spaces provided on the site shall be calculated according to the number of spaces required for each parking facility. [**ADA/ABA-AG:** 208.2]

Table 12.8.2 Parking Spaces

Total Number of Parking Spaces Provided in Parking Facility	Minimum Number of Required Accessible Parking Spaces
1–25	1
26–30	2
51–75	3
76–100	4
101–150	5
151–200	6
201–300	7
301–400	8
401–500	9
501–1000	2 percent of total
≥1001	20, plus 1 for every 100, or fraction thereof, >1000

[**ADA/ABA-AG:** Table 208.2]

12.8.2.1 Ambulatory Health Care Occupancies. Ten percent of patient and visitor parking spaces provided to serve ambulatory health care occupancies shall comply with ICC/ANSI A117.1, Section 502. [**ADA/ABA-AG:** 208.2.1]

12.8.2.2 Rehabilitation Facilities and Outpatient Physical Therapy Facilities. Twenty percent of patient and visitor parking spaces provided to serve rehabilitation facilities specializing in treating conditions that affect mobility and outpatient physical therapy facilities shall comply with ICC/ANSI A117.1, Section 502. [**ADA/ABA-AG:** 208.2.2]

12.8.2.3 Residential Facilities. Parking spaces provided to serve residential facilities shall comply with 12.8.2.3. [**ADA/ABA-AG:** 208.2.3]

12.8.2.3.1 Parking for Residents. Where at least one parking space is provided for each residential dwelling unit, at least one parking space complying with ICC/ANSI A117.1, Section 502 shall be provided for each residential dwelling unit required to provide mobility features complying with 12.45.5.2 through 12.45.5.5. [**ADA/ABA-AG:** 208.2.3.1]

12.8.2.3.2 Additional Parking Spaces for Residents. Where the total number of parking spaces provided for each residential dwelling unit exceeds one parking space per residential dwelling unit, 2 percent, but no fewer than one space, of all the parking spaces not covered by 12.8.2.3.1 shall comply with ICC/ANSI A117.1, Section 502. [**ADA/ABA-AG:** 208.2.3.2]

12.8.2.3.3 Parking for Guests, Employees, and Other Non-Residents. Where parking spaces are provided for persons other than residents, parking shall be provided in accordance with Table 12.8.2. [**ADA/ABA-AG:** 208.2.3.3]

12.8.2.4 Van Parking Spaces. For every six or fraction of six parking spaces required by 12.8.2 to comply with ICC/ANSI A117.1, Section 502, at least one shall be a van parking space complying with ICC/ANSI A117.1, Section 502. [**ADA/ABA-AG:** 208.2.4]

12.8.3 Location. Parking facilities shall comply with 12.8.3. [**ADA/ABA-AG:** 208.3]

12.8.3.1 General. Parking spaces complying with ICC/ANSI A117.1, Section 502 that serve a particular building or facility shall be located on the shortest accessible route from parking to an entrance complying with 12.6.4. Where parking serves more than one accessible entrance, parking spaces complying with ICC/ANSI A117.1, Section 502 shall be dispersed and located on the shortest accessible route to the accessible entrances. In parking facilities that do not serve a particular building or facility, parking spaces complying with ICC/ANSI A117.1, Section 502 shall be located on the shortest accessible route to an accessible pedestrian entrance of the parking facility. [**ADA/ABA-AG:** 208.3.1]

*Exception No. 1: All van parking spaces shall be permitted to be grouped on one level within a multi-story parking facility. [**ADA/ABA-AG:** 208.3.1, Exception 1]*

*Exception No. 2: Parking spaces shall be permitted to be located in different parking facilities if substantially equivalent or greater accessibility is provided in terms of distance from an accessible entrance or entrances, parking fee, and user convenience. [**ADA/ABA-AG:** 208.3.1, Exception 2]*

12.8.3.2 Residential Facilities. In residential facilities containing residential dwelling units required to provide mobility features complying with 12.45.5.2 through 12.45.5.5, parking spaces provided in accordance with 12.8.2.3.1 shall be located on the shortest accessible route to the residential dwelling unit entrance they serve. Spaces provided in accordance with 12.8.2.3.2 shall be dispersed throughout all types of parking provided for the residential dwelling units. [**ADA/ABA-AG:** 208.3.2]

*Exception: Parking spaces provided in accordance with 12.8.2.3.2 shall not be required to be dispersed throughout all types of parking if substantially equivalent or greater accessibility is provided in terms of distance from an accessible entrance, parking fee, and user convenience. [**ADA/ABA-AG:** 208.3.2, Exception]*

Copyright National Fire Protection Association
Provided by IHS under license with NFPA
No reproduction or networking permitted without license from IHS
Not for Resale

12.9 Passenger Loading Zones and Bus Stops. [**ADA/ABA-AG:** 209]

12.9.1 General. Passenger loading zones shall be provided in accordance with Section 12.9. [**ADA/ABA-AG:** 209.1]

12.9.2 Type. Where provided, passenger loading zones shall comply with 12.9.2. [**ADA/ABA-AG:** 209.2]

12.9.2.1 Passenger Loading Zones. Passenger loading zones, except those required to comply with 12.9.2.2 and 12.9.2.3, shall provide at least one passenger loading zone complying with ICC/ANSI A117.1, Section 503 in every continuous 100 linear feet (30 linear meters) of loading zone space, or fraction thereof. [**ADA/ABA-AG:** 209.2.1]

12.9.2.2 Bus Loading Zones. In bus loading zones restricted to use by designated or specified public transportation vehicles, each bus bay, bus stop, or other area designated for lift or ramp deployment shall comply with ICC/ANSI A117.1, Section 805.2. [**ADA/ABA-AG:** 209.2.2]

12.9.2.3 On-Street Bus Stops. On-street bus stops shall comply with ICC/ANSI A117.1, Section 805.2 to the maximum extent practicable. [**ADA/ABA-AG:** 209.2.3]

12.9.3 Health Care Occupancies and Residential Board and Care Occupancies. At least one passenger loading zone complying with ICC/ANSI A117.1, Section 503 shall be provided at an accessible entrance to health care occupancies and residential board and care occupancies where the period of stay exceeds twenty-four hours. [**ADA/ABA-AG:** 209.3]

12.9.4 Valet Parking. Parking facilities that provide valet parking services shall provide at least one passenger loading zone complying with ICC/ANSI A117.1, Section 503. [**ADA/ABA-AG:** 209.4]

12.9.5 Mechanical Access Parking Garages. Mechanical access parking garages shall provide at least one passenger loading zone complying with ICC/ANSI A117.1, Section 503 at vehicle drop-off and vehicle pick-up areas. [**ADA/ABA-AG:** 209.5]

12.10 Stairways. [**ADA/ABA-AG:** 210] Interior and exterior stairs that are part of a means of egress shall comply with Chapter 11 and ICC/ANSI A117.1, Section 504. [**ADA/ABA-AG:** 210.1]

*Exception No. 1: In detention and correctional facilities, stairs that are not located in public use areas shall not be required to comply with ICC/ANSI A117.1, Section 504. [**ADA/ABA-AG:** 210.1, Exception 1]*

*Exception No. 2: In alterations, stairs between levels that are connected by an accessible route shall not be required to comply with ICC/ANSI A117.1, Section 504, except that handrails complying with ICC/ANSI A117.1, Section 505 shall be provided when the stairs are altered. [**ADA/ABA-AG:** 210.1, Exception 2]*

*Exception No. 3: In assembly areas, aisle stairs shall not be required to comply with ICC/ANSI A117.1, Section 504. [**ADA/ABA-AG:** 210.1, Exception 3]*

*Exception No. 4: Stairs that connect play components shall not be required to comply with ICC/ANSI A117.1, section 504. [**ADA/ABA-AG:** 210.1, Exception 4]*

12.11 Drinking Fountains. [**ADA/ABA-AG:** 211]

12.11.1 General. Where drinking fountains are provided on an exterior site, on a floor, or within a secured area they shall be provided in accordance with Section 12.11. [**ADA/ABA-AG:** 211.1]

*Exception: In detention or correctional facilities, drinking fountains only serving holding or housing cells not required to comply with Section 12.32 shall not be required to comply with Section 12.11. [**ADA/ABA-AG:** 211.1, Exception]*

12.11.2 Minimum Number. No fewer than two drinking fountains shall be provided. One drinking fountain shall comply with ICC/ANSI A117.1, Section 602.1 through 602.6 and one drinking fountain shall comply with ICC/ANSI A117.1, Section 602.7. [**ADA/ABA-AG:** 211.2]

*Exception: Where a single drinking fountain complies with ICC/ANSI A117.1, Section 602.1 through 602.6 and 602.7, it shall be permitted to be substituted for two separate drinking fountains. [**ADA/ABA-AG:** 211.2, Exception]*

12.11.3 More than Minimum Number. Where more than the minimum number of drinking fountains specified in 12.11.2 are provided, 50 percent of the total number of drinking fountains provided shall comply with ICC/ANSI A117.1, Section 602.1 through 602.6, and 50 percent of the total number of drinking fountains provided shall comply with ICC/ANSI A117.1, Section 602.7. [**ADA/ABA-AG:** 211.3]

*Exception: Where 50 percent of the drinking fountains yields a fraction, 50 percent shall be permitted to be rounded up or down provided that the total number of drinking fountains complying with Section 12.11 equals 100 percent of drinking fountains. [**ADA/ABA-AG:** 211.3, Exception]*

12.12 Kitchens and Kitchenettes. [**ADA/ABA-AG:** 212]

12.12.1 General. Where provided, kitchens, kitchenettes, and sinks shall comply with Section 12.12. [**ADA/ABA-AG:** 212.1]

12.12.2 Technical Requirements. Kitchens and kitchenettes shall comply with ICC/ANSI A117.1, Section 804. [**ADA/ABA-AG:** 212.2]

12.12.3 Sinks. Where sinks are provided, at least 5 percent, but no fewer than one, of each type provided in each accessible room or space shall comply with ICC/ANSI A117.1, Section 606. [**ADA/ABA-AG:** 212.3]

*Exception: Mop or service sinks shall not be required to comply with 12.12.3. [**ADA/ABA-AG:** 212.3, Exception]*

12.13 Toilet Facilities and Bathing Facilities. [**ADA/ABA-AG:** 213]

12.13.1 General. Where toilet facilities and bathing facilities are provided, they shall comply with Section 12.13. Where toilet facilities and bathing facilities are provided in facilities permitted by 12.6.2.3 Exception No. 1 and Exception No. 2 not to connect stories by an accessible route, toilet facilities and bathing facilities shall be provided on a story connected by an accessible route to an accessible entrance. [**ADA/ABA-AG:** 213.1]

12.13.2 Toilet Rooms and Bathing Rooms.

12.13.2.1 General. Where toilet rooms are provided, each toilet room shall comply with ICC/ANSI A117.1, Section 603. Where bathing rooms are provided, each bathing room shall comply with ICC/ANSI A117.1, Section 603. [**ADA/ABA-AG:** 213.2]

Exception No. 1: In alterations where it is technically infeasible to comply with ICC/ANSI A117.1, Section 603, altering existing toilet or bathing rooms shall not be required where a single unisex toilet room or

Copyright National Fire Protection Association
Provided by IHS under license with NFPA
No reproduction or networking permitted without license from IHS
Not for Resale

*bathing room complying with 12.13.2.2 is provided and located in the same area and on the same floor as existing inaccessible toilet or bathing rooms. [**ADA/ABA-AG:** 213.2, Exception 1]*

*Exception No. 2: Where exceptions for alterations to qualified historic buildings or facilities are permitted by 12.2.5, no fewer than one toilet room for each sex complying with ICC/ANSI A117.1, Section 603 or one unisex toilet room complying with 12.13.2.2 shall be provided. [**ADA/ABA-AG:** 213.2, Exception 2]*

*Exception No. 3: Where multiple single user portable toilet or bathing units are clustered at a single location, no more than 5 percent of the toilet units and bathing units at each cluster shall be required to comply with ICC/ANSI A117.1, Section 603. Portable toilet units and bathing units complying with ICC/ANSI A117.1, Section 603 shall be identified by the International Symbol of Accessibility complying with ICC/ANSI A117.1, Section 703.7.2.1. [**ADA/ABA-AG:** 213.2, Exception 3]*

*Exception No. 4: Where multiple single user toilet rooms are clustered at a single location, no more than 50 percent of the single user toilet rooms for each use at each cluster shall be required to comply with ICC/ANSI A117.1, Section 603. [**ADA/ABA-AG:** 213.2, Exception 4]*

12.13.2.2 Unisex (Single-Use or Family) Toilet and Unisex Bathing Rooms. Unisex toilet rooms shall contain not more than one lavatory, and two water closets without urinals or one water closet and one urinal. Unisex bathing rooms shall contain one shower or one shower and one bathtub, one lavatory, and one water closet. Doors to unisex toilet rooms and unisex bathing rooms shall have privacy latches. [**ADA/ABA-AG:** 213.2.1]

12.13.3 Plumbing Fixtures and Accessories. Plumbing fixtures and accessories provided in a toilet room or bathing room required to comply with 12.13.2 shall comply with 12.13.3. [**ADA/ABA-AG:** 213.3]

12.13.3.1 Toilet Compartments. Where toilet compartments are provided, at least one toilet compartment shall comply with ICC/ANSI A117.1, Section 604.8.1. In addition to the compartment required to comply with ICC/ANSI A117.1, Section 604.8.1, at least one compartment shall comply with ICC/ANSI A117.1, Section 604.8.2 where six or more toilet compartments are provided, or where the combination of urinals and water closets totals six or more fixtures. [**ADA/ABA-AG:** 213.3.1]

12.13.3.2 Water Closets. Where water closets are provided, at least one shall comply with ICC/ANSI A117.1, Section 604. [**ADA/ABA-AG:** 213.3.2]

12.13.3.3 Urinals. Where more than one urinal is provided, at least one shall comply with ICC/ANSI A117.1, Section 605. [**ADA/ABA-AG:** 213.3.3]

12.13.3.4 Lavatories. Where lavatories are provided, at least one shall comply with ICC/ANSI A117.1, Section 606 and shall not be located in a toilet compartment. [**ADA/ABA-AG:** 213.3.4]

12.13.3.5 Mirrors. Where mirrors are provided, at least one shall comply with ICC/ANSI A117.1, Section 603.3. [**ADA/ABA-AG:** 213.3.5]

12.13.3.6 Bathing Facilities. Where bathtubs or showers are provided, at least one bathtub complying with ICC/ANSI A117.1, Section 607 or at least one shower complying with ICC/ANSI A117.1, Section 608 shall be provided. [**ADA/ABA-AG:** 213.3.6)]

12.13.3.7 Coat Hooks and Shelves. Where coat hooks or shelves are provided in toilet rooms without toilet compartments, at least one of each type shall comply with ICC/ANSI A117.1, Section 603.4. Where coat hooks or shelves are provided in toilet compartments, at least one of each type complying with ICC/ANSI A117.1, Section 604.8.3 shall be provided in toilet compartments required to comply with 12.13.3.1. Where coat hooks or shelves are provided in bathing facilities, at least one of each type complying with ICC/ANSI A117.1, Section 603.4 shall serve fixtures required to comply with 12.13.3.6. [**ADA/ABA-AG:** 213.3.7]

12.14 Washing Machines and Clothes Dryers. [**ADA/ABA-AG:** 214]

12.14.1 General. Where provided, washing machines and clothes dryers shall comply with Section 12.14. [**ADA/ABA-AG:** 214.1]

12.14.2 Washing Machines. Where three or fewer washing machines are provided, at least one shall comply with ICC/ANSI A117.1, Section 611. Where more than three washing machines are provided, at least two shall comply with ICC/ANSI A117.1, Section 611. [**ADA/ABA-AG:** 214.2]

12.14.3 Clothes Dryers. Where three or fewer clothes dryers are provided, at least one shall comply with ICC/ANSI A117.1, Section 611. Where more than three clothes dryers are provided, at least two shall comply with ICC/ANSI A117.1, Section 611. [**ADA/ABA-AG:** 214.3]

12.15 Fire Alarm Systems. [**ADA/ABA-AG:** 215]

12.15.1 General. Where fire alarm systems provide audible alarm coverage, alarms shall comply with Section 12.15. [**ADA/ABA-AG:** 215.1]

*Exception: In existing facilities, visible alarms shall not be required except where an existing fire alarm system is upgraded or replaced, or a new fire alarm system is installed. [**ADA/ABA-AG:** 215.1, Exception]*

12.15.2 Public and Common Use Areas. Alarms in public use areas and common use areas shall comply with *NFPA 72, National Fire Alarm Code.* [**ADA/ABA-AG:** 215.2]

12.15.3 Employee Work Areas. Where employee work areas have audible alarm coverage, the wiring system shall be designed so that visible alarms complying with *NFPA 72* can be integrated into the alarm system. [**ADA/ABA-AG:** 215.3]

12.15.4 Transient Lodging. Guest rooms required to comply with 12.24.4 shall provide alarms complying with *NFPA 72.* [**ADA/ABA-AG:** 215.4]

12.15.5 Residential Facilities. Where provided in residential dwelling units required to comply with 12.45.5.6, alarms shall comply with *NFPA 72.* [**ADA/ABA-AG:** 215.5]

12.16 Signs. [**ADA/ABA-AG:** 216]

12.16.1 General. Signs shall be provided in accordance with Section 12.16 and shall comply with ICC/ANSI A117.1, Section 703. [**ADA/ABA-AG:** 216.1]

*Exception No. 1: Building directories, menus, seat and row designations in assembly areas, occupant names, building addresses, and company names and logos shall not be required to comply with Section 12.16. [**ADA/ABA-AG:** 216.1, Exception 1]*

*Exception No. 2: In parking facilities, signs shall not be required to comply with 12.16.2, 12.16.3, and 12.16.6 through 12.16.12. [**ADA/ABA-AG:** 216.1, Exception 2]*

*Exception No. 3: Temporary, 7 days or less, signs shall not be required to comply with Section 12.16. [**ADA/ABA-AG:** 216.1, Exception 3]*

Copyright National Fire Protection Association
Provided by IHS under license with NFPA
No reproduction or networking permitted without license from IHS
Not for Resale

*Exception No. 4: In detention and correctional facilities, signs not located in public use areas shall not be required to comply with Section 12.16. [**ADA/ABA-AG:** 216.1, Exception 4]*

12.16.2 Designations. Interior and exterior signs identifying permanent rooms and spaces shall comply with ICC/ANSI A117.1, Section 703.1, 703.2, and 703.5. Where pictograms are provided as designations of permanent interior rooms and spaces, the pictograms shall comply with ICC/ANSI A117.1, Section 703.6 and shall have text descriptors complying with ICC/ANSI A117.1, Section 703.2 and ICC/ANSI A117.1, Section 703.5. [**ADA/ABA-AG:** 216.2]

*Exception: Exterior signs that are not located at the door to the space they serve shall not be required to comply with ICC/ANSI A117.1, Section 703.2. [**ADA/ABA-AG:** 216.2, Exception]*

12.16.3 Directional and Informational Signs. Signs that provide direction to or information about interior spaces and facilities of the site shall comply with ICC/ANSI A117.1, Section 703.5. [**ADA/ABA-AG:** 216.3]

12.16.4 Means of Egress. Signs for means of egress shall comply with 12.16.4. [**ADA/ABA-AG:** 216.4]

12.16.4.1 Exit Doors. Doors at exit passageways, exit discharge, and exit stairways shall be identified by tactile signs complying with ICC/ANSI A117.1, Sections 703.1, 703.2, and 703.5. [**ADA/ABA-AG:** 216.4.1]

12.16.4.2 Areas of Refuge. Signs required by Section 11.10 or 11.2.12 to provide instructions in areas of refuge shall comply with ICC/ANSI A117.1, Section 703.5. [**ADA/ABA-AG:** 216.4.2]

12.16.4.3 Directional Signs. Signs required by Section 11.10 or 11.2.12 to provide directions to accessible means of egress shall comply with ICC/ANSI A117.1, Section 703.5. [**ADA/ABA-AG:** 216.4.3]

12.16.5 Parking. Parking spaces complying with ICC/ANSI A117.1, Section 502 shall be identified by signs complying with ICC/ANSI A117.1, Section 502.6. [**ADA/ABA-AG:** 216.5]

*Exception No. 1: Where a total of four or fewer parking spaces, including accessible parking spaces, are provided on a site, identification of accessible parking spaces shall not be required. [**ADA/ABA-AG:** 216.5, Exception 1]*

*Exception No. 2: In residential facilities, where parking spaces are assigned to specific residential dwelling units, identification of accessible parking spaces shall not be required. [**ADA/ABA-AG:** 216.5, Exception 2]*

12.16.6 Entrances. Where not all entrances comply with ICC/ANSI A117.1, Section 404, entrances complying with ICC/ANSI A117.1, Section 404 shall be identified by the International Symbol of Accessibility complying with ICC/ANSI A117.1, Section 703.7.2.1. Directional signs complying with ICC/ANSI A117.1, Section 703.5 that indicate the location of the nearest entrance complying with ICC/ANSI A117.1, Section 404 shall be provided at entrances that do not comply with ICC/ANSI A117.1, Section 404. [**ADA/ABA-AG:** 216.6]

12.16.7 Elevators. Where existing elevators do not comply with ICC/ANSI A117.1, Section 407, elevators complying with ICC/ANSI A117.1, Section 407 shall be clearly identified with the International Symbol of Accessibility complying with ICC/ANSI A117.1, Section 703.7.2.1. [**ADA/ABA-AG:** 216.7]

12.16.8 Toilet Rooms and Bathing Rooms. Where existing toilet rooms or bathing rooms do not comply with ICC/ANSI A117.1, Section 603, directional signs indicating the location of the nearest toilet room or bathing room complying with ICC/ANSI A117.1, Section 603 within the facility shall be provided. Signs shall comply with ICC/ANSI A117.1, Section 703.5 and shall include the International Symbol of Accessibility complying with ICC/ANSI A117.1, Section 703.7.2.1. Where existing toilet rooms or bathing rooms do not comply with ICC/ANSI A117.1, Section 603, the toilet rooms or bathing rooms complying with ICC/ANSI A117.1, Section 603 shall be identified by the International Symbol of Accessibility complying with ICC/ANSI A117.1, Section 703.7.2.1. Where clustered single user toilet rooms or bathing facilities are permitted to use exceptions to 12.13.2, toilet rooms or bathing facilities complying with ICC/ANSI A117.1, Section 603 shall be identified by the International Symbol of Accessibility complying with ICC/ANSI A117.1, Section 703.7.2.1 unless all toilet rooms and bathing facilities comply with ICC/ANSI A117.1, Section 603. [**ADA/ABA-AG:** 216.8]

12.16.9 TTYs. Identification and directional signs for public TTYs shall be provided in accordance with 12.16.9. [**ADA/ABA-AG:** 216.9]

12.16.9.1 Identification Signs. Public TTYs shall be identified by the International Symbol of TTY complying with ICC/ANS A117.1, Section 703.7.2.2. [**ADA/ABA-AG:** 216.9.1]

12.16.9.2 Directional Signs. Directional signs indicating the location of the nearest public TTY shall be provided at all banks of public pay telephones not containing a public TTY. In addition, where signs provide direction to public pay telephones, they shall also provide direction to public TTYs. Directional signs shall comply with ICC/ANSI A117.1, Section 703.5 and shall include the International Symbol of TTY complying with ICC/ANS A117.1, Section 703.7.2.2. [**ADA/ABA-AG:** 216.9.2]

12.16.10 Assistive Listening Systems. Each assembly area required by Section 12.19 to provide assistive listening systems shall provide signs informing patrons of the availability of the assistive listening system. Assistive listening signs shall comply with ICC/ANSI A117.1, Section 703.5 and shall include the International Symbol of Access for Hearing Loss complying with ICC/ANS A117.1, Section 703.7.2.4. [**ADA/ABA-AG:** 216.10]

*Exception: Where ticket offices or windows are provided, signs shall not be required at each assembly area provided that signs are displayed at each ticket office or window informing patrons of the availability of assistive listening systems. [**ADA/ABA-AG:** 216.10, Exception]*

12.16.11 Check-Out Aisles. Where more than one check-out aisle is provided, check-out aisles complying with ICC/ANSI A117.1, Section 904.4 shall be identified by the International Symbol of Accessibility complying with ICC/ANSI A117.1, Section 703.7.2.1. Where check-out aisles are identified by numbers, letters, or functions, signs identifying check-out aisles complying with ICC/ANSI A117.1, Section 904.4 shall be located in the same location as the check-out aisle identification. [**ADA/ABA-AG:** 216.11]

*Exception: Where all check-out aisles serving a single function comply with ICC/ANSI A117.1, Section 904.4, signs complying with ICC/ANSI A117.1, Section 703.7.2.1 shall not be required. [**ADA/ABA-AG:** 216.11, Exception]*

12.16.12 Amusement Rides. Signs identifying the type of access provided on amusement rides shall be provided at entries

Copyright National Fire Protection Association
Provided by IHS under license with NFPA
No reproduction or networking permitted without license from IHS
Not for Resale

to queues and waiting lines. In addition, where accessible unload areas also serve as accessible load areas, signs indicating the location of the accessible load and unload areas shall be provided at entries to queues and waiting lines. [**ADA/ABA-AG:** 216.12]

12.17 Telephones. [**ADA/ABA-AG:** 217]

12.17.1 General. Where coin-operated public pay telephones, coinless public pay telephones, public closed-circuit telephones, public courtesy phones, or other types of public telephones are provided, public telephones shall be provided in accordance with Section 12.17 for each type of public telephone provided. For purposes of Section 12.17, a bank of telephones shall be considered to be two or more adjacent telephones. [**ADA/ABA-AG:** 217.1]

12.17.2 Wheelchair Accessible Telephones. Where public telephones are provided, wheelchair accessible telephones complying with ICC/ANSI A117.1, Section 704.2 shall be provided in accordance with Table 12.17.2. [**ADA/ABA-AG:** 217.2]

Table 12.17.2 Wheelchair Accessible Telephones

Number of Telephones Provided on a Floor, Level, or Exterior Site	Minimum Number of Required Wheelchair Accessible Telephones
1 or more single units	1 per floor, level, and exterior site
1 bank	1 per floor, level, and exterior site
2 or more banks	1 per bank

[**ADA/ABA-AG:** Table 217.2]

*Exception: Drive-up only public telephones shall not be required to comply with 12.17.2. [**ADA/ABA-AG:** 217.2, Exception]*

12.17.3 Volume Controls. All public telephones shall have volume controls complying with ICC/ANSI A117.1, Section 704.3. [**ADA/ABA-AG:** 217.3]

12.17.4 TTYs. TTYs complying with ICC/ANSI A117.1, Section 704.4 shall be provided in accordance with 12.17.4. [**ADA/ABA-AG:** 217.4]

12.17.4.1 Bank Requirement. Where four or more public pay telephones are provided at a bank of telephones, at least one public TTY complying with ICC/ANSI A117.1, Section 704.4 shall be provided at that bank. [**ADA/ABA-AG:** 217.4.1]

*Exception: TTYs shall not be required at banks of telephones located within 200 ft (61 m) of, and on the same floor as, a bank containing a public TTY. [**ADA/ABA-AG:** 217.4.1, Exception]*

12.17.4.2 Floor Requirement. TTYs in public buildings shall be provided in accordance with 12.17.4.2.1. TTYs in private buildings shall be provided in accordance with 12.17.4.2.2. [**ADA/ABA-AG:** 217.4.2]

12.17.4.2.1 Public Buildings. Where at least one public pay telephone is provided on a floor of a public building, at least one public TTY shall be provided on that floor. [**ADA/ABA-AG:** 217.4.2.1]

12.17.4.2.2 Private Buildings. Where four or more public pay telephones are provided on a floor of a private building, at least one public TTY shall be provided on that floor. [**ADA/ABA-AG:** 217.4.2.2]

12.17.4.3 Building Requirement. TTYs in public buildings shall be provided in accordance with 12.17.4.3.1. TTYs in private buildings shall be provided in accordance with 12.17.4.3.2. [**ADA/ABA-AG:** 217.4.3]

12.17.4.3.1 Public Buildings. Where at least one public pay telephone is provided in a public building, at least one public TTY shall be provided in the building. Where at least one public pay telephone is provided in a public use area of a public building, at least one public TTY shall be provided in the public building in a public use area. [**ADA/ABA-AG:** 217.4.3.1]

12.17.4.3.2 Private Buildings. Where four or more public pay telephones are provided in a private building, at least one public TTY shall be provided in the building. [**ADA/ABA-AG:** 217.4.3.2]

12.17.4.4 Exterior Site Requirement. Where four or more public pay telephones are provided on an exterior site, at least one public TTY shall be provided on the site. [**ADA/ABA-AG:** 217.4.4]

12.17.4.5 Rest Stops, Emergency Roadside Stops, and Service Plazas. Where at least one public pay telephone is provided at a public rest stop, emergency roadside stop, or service plaza, at least one public TTY shall be provided. [**ADA/ABA-AG:** 217.4.5)]

12.17.4.6 Hospitals. Where at least one public pay telephone is provided serving a hospital emergency room, hospital recovery room, or hospital waiting room, at least one public TTY shall be provided at each location. [**ADA/ABA-AG:** 217.4.6]

12.17.4.7 Transportation Facilities. In transportation facilities, in addition to the requirements of 12.17.4.1 through 12.17.4.4, where at least one public pay telephone serves a particular entrance to a bus or rail facility, at least one public TTY shall be provided to serve that entrance. In airports, in addition to the requirements of 12.17.4.1 through 12.17.4.4, where four or more public pay telephones are located in a terminal outside the security areas, a concourse within the security areas, or a baggage claim area in a terminal, at least one public TTY shall be provided in each location. [**ADA/ABA-AG:** 217.4.7]

12.17.4.8 Detention and Correctional Facilities. In detention and correctional facilities, where at least one pay telephone is provided in a secured area used only by detainees or inmates and security personnel, at least one TTY shall be provided in at least one secured area. [**ADA/ABA-AG:** 217.4.8]

12.17.5 Shelves for Portable TTYs. Where a bank of telephones in the interior of a building consists of three or more public pay telephones, at least one public pay telephone at the bank shall be provided with a shelf and an electrical outlet in accordance with ICC/ANSI A117.1, Section 704.5. [**ADA/ABA-AG:** 217.5]

*Exception No. 1: Secured areas of detention and correctional facilities where shelves and outlets are prohibited for purposes of security or safety shall not be required to comply with 12.17.5. [**ADA/ABA-AG:** 217.5, Exception 1]*

*Exception No. 2: The shelf and electrical outlet shall not be required at a bank of telephones with a TTY. [**ADA/ABA-AG:** 217.5, Exception 2]*

12.18 Transportation Facilities. [**ADA/ABA-AG:** 218]

Copyright National Fire Protection Association
Provided by IHS under license with NFPA
No reproduction or networking permitted without license from IHS
Not for Resale

12.18.1 General. Transportation facilities shall comply with Section 12.18. [**ADA/ABA-AG:** 218.1]

12.18.2 New and Altered Fixed Guideway Stations. New and altered stations in rapid rail, light rail, commuter rail, intercity rail, high speed rail, and other fixed guideway systems shall comply with ICC/ANSI A117.1, Sections 805.5 through 805.10. [**ADA/ABA-AG:** 218.2]

12.18.3 Key Stations and Existing Intercity Rail Stations. Key stations and existing intercity rail stations shall comply with ICC/ANSI A117.1, Sections 805.5 through 805.10. [**ADA/ABA-AG:** 218.3]

12.18.4 Bus Shelters. Where provided, bus shelters shall comply with ICC/ANSI A117.1, Section 805.3. [**ADA/ABA-AG:** 218.4]

12.18.5 Other Transportation Facilities. In other transportation facilities, public address systems shall comply with ICC/ANSI A117.1, Section 805.7 and clocks shall comply with ICC/ANSI A117.1, Section 805.8. [**ADA/ABA-AG:** 218.5)]

12.19 Assistive Listening Systems. [**ADA/ABA-AG:** 219]

12.19.1 General. Assistive listening systems shall be provided in accordance with Section 12.19 and shall comply with ICC/ANSI A117.1, Section 706. [**ADA/ABA-AG:** 219.1]

12.19.2 Required Systems. In each assembly area where audible communication is integral to the use of the space, an assistive listening system shall be provided. [**ADA/ABA-AG:** 219.2]

*Exception: Other than in courtrooms, assistive listening systems shall not be required where audio amplification is not provided. [**ADA/ABA-AG:** 219.2, Exception]*

12.19.3 Receivers. Receivers complying with ICC/ANSI A117.1, Section 706.2 shall be provided for assistive listening systems in each assembly area in accordance with Table 12.19.3. Twenty-five percent minimum of receivers provided, but no fewer than two, shall be hearing-aid compatible in accordance with ICC/ANSI A117.1, Section 706.3. [**ADA/ABA-AG:** 219.3]

Table 12.19.3 Receivers for Assistive Listening Systems

Capacity of Seating in Assembly Area	Minimum Number of Required Receivers	Minimum Number of Required Receivers Required to Be Hearing-Aid Compatible
≤50	2	2
51–200	2, plus 1 per 25 seats >50 seats*	2
201–500	2, plus 1 per 25 seats >50 seats*	1 per 4 receivers*
501–1000	20, plus 1 per 33 seats >500 seats*	1 per 4 receivers*
1001–2000	35, plus 1 per 50 seats >1000 seats*	1 per 4 receivers*
≥2001	55, plus 1 per 100 seats >2000 seats*	1 per 4 receivers*

[**ADA/ABA-AG:** Table 219.3]
*Or fraction thereof.

*Exception No. 1: Where a building contains more than one assembly area and the assembly areas required to provide assistive listening systems are under one management, the total number of required receivers shall be permitted to be calculated according to the total number of seats in the assembly areas in the building provided that all receivers are usable with all systems. [**ADA/ABA-AG:** 219.3, Exception 1]*

*Exception No. 2: Where all seats in an assembly area are served by an induction loop assistive listening system, the minimum number of receivers required by Table 12.19.3 to be hearing-aid compatible shall not be required to be provided. [**ADA/ABA-AG:** 219.3, Exception 2]*

12.20 Automatic Teller Machines and Fare Machines. [**ADA/ABA-AG:** 220] Where automatic teller machines or self-service fare vending, collection, or adjustment machines are provided, at least one of each type provided at each location shall comply with ICC/ANSI A117.1, Section 707. Where bins are provided for envelopes, waste paper, or other purposes, at least one of each type shall comply with 12.45.7. [**ADA/ABA-AG:** 220.1]

12.21 Assembly Areas. [**ADA/ABA-AG:** 221]

12.21.1 General. Assembly areas shall provide wheelchair spaces, companion seats, and designated aisle seats complying with Section 12.21 and ICC/ANSI A117.1, Section 802. In addition, lawn seating shall comply with 12.21.5. [**ADA/ABA-AG:** 221.1]

12.21.2 Wheelchair Spaces. Wheelchair spaces complying with 12.21.2 shall be provided in assembly areas with fixed seating. [**ADA/ABA-AG:** 221.2]

12.21.2.1 Number and Location. Wheelchair spaces shall be provided complying with 12.21.2.1. [**ADA/ABA-AG:** 221.2.1]

12.21.2.1.1 General Seating. Wheelchair spaces complying with ICC/ANSI A117.1, Section 802.1 shall be provided in accordance with Table 12.21.2.1.1. [**ADA/ABA-AG:** 221.2.1.1]

Table 12.21.2.1.1 Number of Wheelchair Spaces in Assembly Areas

Number of Seats	Minimum Number of Required Wheelchair Spaces
4–25	1
26–50	2
51–150	4
151–300	5
301–500	6
501–5000	6, plus 1 for each 160, or fraction thereof, between 501 and 5000
≥5001	36, plus 1 for each 200, or fraction thereof, >5000

[**ADA/ABA-AG:** Table 221.2.1.1]

12.21.2.1.2 Luxury Boxes, Club Boxes, and Suites in Arenas, Stadiums, and Grandstands. In each luxury box, club box, and suite within arenas, stadiums, and grandstands, wheelchair spaces complying with ICC/ANSI A117.1, Section 802.1 shall be provided in accordance with Table 12.21.2.1.1. [**ADA/ABA-AG:** 221.2.1.2]

12.21.2.1.3 Other Boxes. In boxes other than those required to comply with 12.21.2.1.2, the total number of wheelchair spaces required shall be determined in accordance with Table

Copyright National Fire Protection Association
Provided by IHS under license with NFPA
No reproduction or networking permitted without license from IHS
Not for Resale

12.21.2.1.1. Wheelchair spaces shall be located in not less than 20 percent of all boxes provided. Wheelchair spaces shall comply with ICC/ANSI A117.1, Section 802.1. [**ADA/ABA-AG:** 221.2.1.3]

12.21.2.1.4 Team or Player Seating. At least one wheelchair space complying with ICC/ANSI A117.1, Section 802.1 shall be provided in team or player seating areas serving areas of sport activity. [**ADA/ABA-AG:** 221.2.1.4]

*Exception: Wheelchair spaces shall not be required in team or player seating areas serving bowling lanes not required to comply with 12.6.2.11. [**ADA/ABA-AG:** 221.2.1.4, Exception]*

12.21.2.2 Integration. Wheelchair spaces shall be an integral part of the seating plan. [**ADA/ABA-AG:** 221.2.2]

12.21.2.3 Lines of Sight and Dispersion. Wheelchair spaces shall provide lines of sight complying with ICC/ANSI A117.1, Section 802.2 and shall comply with 12.21.2.3. In providing lines of sight, wheelchair spaces shall be dispersed. Wheelchair spaces shall provide spectators with choices of seating locations and viewing angles that are substantially equivalent to, or better than, the choices of seating locations and viewing angles available to all other spectators. When the number of wheelchair spaces required by 12.21.2.1 has been met, further dispersion shall not be required. [**ADA/ABA-AG:** 221.2.3]

*Exception: Wheelchair spaces in team or player seating areas serving areas of sport activity shall not be required to comply with 12.21.2.3. [**ADA/ABA-AG:** 221.2.3, Exception]*

12.21.2.3.1 Horizontal Dispersion. Wheelchair spaces shall be dispersed horizontally. [**ADA/ABA-AG:** 221.2.3.1]

*Exception No. 1: Horizontal dispersion shall not be required in assembly areas with 300 or fewer seats if the companion seats required by 12.21.3 and wheelchair spaces are located within the second or third quartile of the total row length. Intermediate aisles shall be included in determining the total row length. If the row length in the second and third quartile of a row is insufficient to accommodate the required number of companion seats and wheelchair spaces, the additional companion seats and wheelchair spaces shall be permitted to be located in the first and fourth quartile of the row. [**ADA/ABA-AG:** 221.2.3.1, Exception 1]*

*Exception No. 2: In row seating, two wheelchair spaces shall be permitted to be located side-by-side. [**ADA/ABA-AG:** 221.2.3.1, Exception 2]*

12.21.2.3.2 Vertical Dispersion. Wheelchair spaces shall be dispersed vertically at varying distances from the screen, performance area, or playing field. In addition, wheelchair spaces shall be located in each balcony or mezzanine that is located on an accessible route. [**ADA/ABA-AG:** 221.2.3.2]

*Exception No. 1: Vertical dispersion shall not be required in assembly areas with 300 or fewer seats if the wheelchair spaces provide viewing angles that are equivalent to, or better than, the average viewing angle provided in the facility. [**ADA/ABA-AG:** 221.2.3.2, Exception 1]*

*Exception No. 2: In bleachers, wheelchair spaces shall not be required to be provided in rows other than rows at points of entry to bleacher seating. [**ADA/ABA-AG:** 221.2.3.2, Exception 2]*

12.21.3 Companion Seats. At least one companion seat complying with ICC/ANSI A117.1, Section 802.3 shall be provided for each wheelchair space required by 12.21.2.1. [**ADA/ABA-AG:** 221.3]

12.21.4 Designated Aisle Seats. At least 5 percent of the total number of aisle seats provided shall comply with ICC/ANSI A117.1, Section 802.4 and shall be the aisle seats located closest to accessible routes. [**ADA/ABA-AG:** 221.4]

*Exception: Team or player seating areas serving areas of sport activity shall not be required to comply with 12.21.4. [**ADA/ABA-AG:** 221.4, Exception]*

12.21.5 Lawn Seating. Lawn seating areas and exterior overflow seating areas, where fixed seats are not provided, shall connect to an accessible route. [**ADA/ABA-AG:** 221.5]

12.22 Dressing, Fitting, and Locker Rooms. [**ADA/ABA-AG:** 222]

12.22.1 General. Where dressing rooms, fitting rooms, or locker rooms are provided, at least 5 percent, but no fewer than one, of each type of use in each cluster provided shall comply with ICC/ANSI A117.1, Section 803. [**ADA/ABA-AG:** 222.1]

*Exception: In alterations, where it is technically infeasible to provide rooms in accordance with 12.22.1, one room for each sex on each level shall comply with ICC/ANSI A117.1, Section 803. Where only unisex rooms are provided, unisex rooms shall be permitted. [**ADA/ABA-AG:** 222.1, Exception]*

12.22.2 Coat Hooks and Shelves. Where coat hooks or shelves are provided in dressing, fitting, or locker rooms without individual compartments, at least one of each type shall comply with ICC/ANSI A117.1, Section 903.5. Where coat hooks or shelves are provided in individual compartments at least one of each type complying with ICC/ANSI A117.1, Section 803.5 shall be provided in individual compartments in dressing, fitting, or locker rooms required to comply with 12.22.1. [**ADA/ABA-AG:** 222.2]

12.23 Health Care Occupancies and Residential Board and Care Occupancies. [**ADA/ABA-AG:** 223] In health care occupancies and residential board and care occupancies where the period of stay exceeds 24 hours, patient or resident sleeping rooms shall be provided in accordance with 12.23. [**ADA/ABA-AG:** 223.1]

*Exception: Toilet rooms that are part of critical or intensive care patient sleeping rooms shall not be required to comply with ICC/ANSI A117.1, Section 603. [**ADA/ABA-AG:** 223.1, Exception]*

12.23.1 Alterations. Where sleeping rooms are altered or added, the requirements of Section 12.23 shall apply only to the sleeping rooms being altered or added until the number of sleeping rooms complies with the minimum number required for new construction. [**ADA/ABA-AG:** 223.1.1]

12.23.2 Health Care Occupancies and Residential Board and Care Occupancies. Health care occupancies and residential board and care occupancies shall comply with 12.23. [**ADA/ABA-AG:** 223.2]

12.23.3 Facilities Not Specializing in Treating Conditions That Affect Mobility. In facilities not specializing in treating conditions that affect mobility, at least 10 percent, but no fewer than one, of the patient sleeping rooms shall provide mobility features complying with 12.45.2. [**ADA/ABA-AG:** 223.2.1]

12.23.4 Facilities Specializing in Treating Conditions That Affect Mobility. In facilities specializing in treating conditions that affect mobility, 100 percent of the patient sleeping rooms shall provide mobility features complying with 12.45.2. [**ADA/ABA-AG:** 223.2.1]

Copyright National Fire Protection Association
Provided by IHS under license with NFPA
No reproduction or networking permitted without license from IHS
Not for Resale

12.23.5 Nursing Homes and Residential Board and Care Occupancies. In nursing homes and residential board and care occupancies, at least 50 percent, but no fewer than one, of each type of resident sleeping room shall provide mobility features complying with 12.45.2. [**ADA/ABA-AG:** 223.3]

12.24 Hotel and Motel and Lodging and Rooming House Guest Rooms. [**ADA/ABA-AG:** 224]

12.24.1 General. Hotels and motels and lodging or rooming house occupancies shall provide guest rooms in accordance with Section 12.24 and in a number required by Table 12.24.1. [**ADA/ABA-AG:** 224.1]

Table 12.24.1 Number of Units with Mobility, Communication, and Usable Features Required

	ADA/ABA-AG Requirements	
NFPA Occupancy	**ADA/ABA-AG Occupancy**	**# of Units with Mobility, Communication, and Usable Features Required**
Hotel, Lodging or rooming house, Dormitory	Transient[1]	See Tables 12.24.2 and 12.24.4
Hotel, Dormitory, Lodging or rooming house	Non-Transient[2]	See 12.33

[1]Occupants are generally charged by the day and stay for less than thirty days.
[2]Occupants are generally charged by the month and stay for more than thirty days.

12.24.1.1 Alterations. Where guest rooms are altered or added, the requirements of Section 12.24 shall apply only to the guest rooms being altered or added until the number of guest rooms complies with the minimum number required for new construction. [**ADA/ABA-AG:** 224.1.1]

12.24.1.2 Guest Room Doors and Doorways. Entrances, doors, and doorways providing user passage into and within guest rooms that are not required to provide mobility features complying with 12.45.3.2 shall comply with ICC/ANSI A117.1, Section 404.2.3. [**ADA/ABA-AG:** 224.1.2]

Exception: Shower and sauna doors in guest rooms that are not required to provide mobility features complying with 12.45.3.2 shall not be required to comply with ICC/ANSI A117.1, Section 404.2.3. [ADA/ABA-AG: 224.1.2, Exception]

12.24.2 Guest Rooms with Mobility Features. In hotels and motels and lodging or rooming house occupancies, guest rooms with mobility features complying with 12.45.3.2 shall be provided in accordance with Table 12.24.2. [**ADA/ABA-AG:** 224.2]

12.24.3 Beds. In guest rooms having more than 25 beds, 5 percent minimum of the beds shall have clear floor space complying with 12.45.3.2. [**ADA/ABA-AG:** 224.3]

Table 12.24.2 Guest Rooms with Mobility Features

Total Number of Guest Rooms Provided	Minimum Number of Required Rooms Without Roll-In Showers	Minimum Number of Required Rooms with Roll-In Showers	Total Number of Required Rooms
1–25	1	0	1
26–50	2	0	2
51–75	3	1	4
76–100	4	1	5
101–150	5	2	7
151–200	6	2	8
201–300	7	3	10
301–400	8	4	12
401–500	9	4	13
501–1000	2 percent of total	1 percent of total	3 percent of total
≥1001	20, plus 1 for each 100, or fraction thereof, >1000	10, plus 1 for each 100, or fraction thereof, >1000	30, plus 2 for each 100, or fraction thereof, >1000

[**ADA/ABA-AG:** Table 224.2]

12.24.4 Guest Rooms with Communication Features. In hotels and motels and lodging or rooming house occupancies, guest rooms with communication features complying with 12.45.3.3 shall be provided in accordance with Table 12.24.4. [**ADA/ABA-AG:** 224.4]

Table 12.24.4 Guest Rooms with Communication Features

Total Number of Guest Rooms Provided	Minimum Number of Required Guest Rooms with Communication Features
2–25	2
26– 50	4
51–75	7
76–100	9
101–150	12
151–200	14
201–300	17
301–400	20
401–500	22
501–1000	5 percent of total
≥1001	50, plus 3 for each 100 >1000

[**ADA/ABA-AG:** Table 224.4]

12.24.5 Dispersion. Guest rooms required to provide mobility features complying with 12.45.3.2 and guest rooms required to provide communication features complying with 12.45.3.3 shall be dispersed among the various classes of guest rooms, and shall provide choices of types of guest rooms, number of beds, and other amenities comparable to the choices provided to other guests. Where the minimum number of guest rooms required to comply with 12.45.3 is not sufficient to allow for complete dispersion, guest rooms shall be dispersed in the

Copyright National Fire Protection Association
Provided by IHS under license with NFPA
No reproduction or networking permitted without license from IHS
Not for Resale

following priority: guest room type, number of beds, and amenities. At least one guest room required to provide mobility features complying with 12.45.3.2 shall also provide communication features complying with 12.45.3.3. Not more than 10 percent of guest rooms required to provide mobility features complying with 12.45.3.2 shall be used to satisfy the minimum number of guest rooms required to provide communication features complying with 12.45.3.3. [**ADA/ABA-AG:** 224.5]

12.25 Storage. [**ADA/ABA-AG:** 225] Storage facilities shall comply with Section 12.25. [**ADA/ABA-AG:** 225.1]

12.25.1 General. Where storage is provided in accessible spaces, at least one of each type shall comply with 12.45.7. [**ADA/ABA-AG:** 225.2]

12.25.2 Lockers. Where lockers are provided, at least 5 percent, but no fewer than one of each type, shall comply with 12.45.7. [**ADA/ABA-AG:** 225.2.1]

12.25.3 Self-Service Storage Facilities.

12.25.3.1 General. Self-service storage facilities shall provide individual self-service storage spaces complying with these requirements in accordance with Table 12.25.3.1. [**ADA/ABA-AG:** 225.3]

Table 12.25.3.1 Self-Service Storage Facilities

Total Spaces in Facility	Minimum Number of Spaces Required to be Accessible
1–200	5 percent, but no fewer than 1
≥201	10, plus 2 percent of total number of units >200

[**ADA/ABA-AG:** Table 225.3]

12.25.3.2 Dispersion. Individual self-service storage spaces shall be dispersed throughout the various classes of spaces provided. Where more classes of spaces are provided than the number required to be accessible, the number of spaces shall not be required to exceed that required by Table 12.25.3.1. Self-service storage spaces complying with Table 12.25.3.1 shall not be required to be dispersed among buildings in a multi-building facility. [**ADA/ABA-AG:** 225.3.1]

12.26 Dining Surfaces and Work Surfaces. [**ADA/ABA-AG:** 226]

12.26.1 General. Where dining surfaces are provided for the consumption of food or drink, at least 5 percent of the seating spaces and standing spaces at the dining surfaces shall comply with ICC/ANSI A117.1, Section 902. In addition, where work surfaces are provided for use by other than employees, at least 5 percent shall comply with ICC/ANSI A117.1, Section 902. [**ADA/ABA-AG:** 226.1]

*Exception No. 1: Sales counters and service counters shall not be required to comply with ICC/ANSI A117.1, Section 902. [**ADA/ABA-AG:** 226.1, Exception 1]*

*Exception No. 2: Check writing surfaces provided at check-out aisles not required to comply with ICC/ANSI A117.1, Section 904.4 shall not be required to comply with ICC/ANSI A117.1, Section 902. [**ADA/ABA-AG:** 226.1, Exception 2]*

12.26.2 Dispersion. Dining surfaces and work surfaces required to comply with ICC/ANSI A117.1, Section 902 shall be dispersed throughout the space or facility containing dining surfaces and work surfaces. [**ADA/ABA-AG:** 226.2]

12.27 Sales and Service. [**ADA/ABA-AG:** 227]

12.27.1 General. Where provided, check-out aisles, sales counters, service counters, food service lines, queues, and waiting lines shall comply with Section 12.27 and ICC/ANSI A117.1, Section 904. [**ADA/ABA-AG:** 227.1]

12.27.2 Check-Out Aisles. Where check-out aisles are provided, check-out aisles complying with ICC/ANSI A117.1, Section 904.4 shall be provided in accordance with Table 12.27.2. Where check-out aisles serve different functions, check-out aisles complying with ICC/ANSI A117.1, Section 904.4 shall be provided in accordance with Table 12.27.2 for each function. Where check-out aisles are dispersed throughout the building or facility, check-out aisles complying with ICC/ANSI A117.1, Section 904.4 shall be dispersed. [**ADA/ABA-AG:** 227.2]

Table 12.27.2 Check-Out Aisles

Number of Check-Out Aisles of Each Function	Minimum Number of Check-Out Aisles of Each Function Required to Comply with ICC/ANSI A117.1, Section 904.4
1–4	1
5–8	2
9–15	3
≥16	3, plus 20 percent of additional aisles

[**ADA/ABA-AG:** Table 227.2]

*Exception: Where the selling space is under 5000 ft^2 (465 m^2) no more than one check-out aisle complying with ICC/ANSI A117.1, Section 904.4 shall be required. [**ADA/ABA-AG:** 227.2, Exception]*

12.27.3 Altered Check-Out Aisles. Where check-out aisles are altered, at least one of each check-out aisle serving each function shall comply with ICC/ANSI A117.1, Section 904.4 until the number of check-out aisles complies with 12.27.2. [**ADA/ABA-AG:** 227.2.1]

12.27.4 Counters. Where provided, at least one of each type of sales counter and service counter shall comply with ICC/ANSI A117.1, Section 904.3. Where counters are dispersed throughout the building or facility, counters complying with ICC/ANSI A117.1, Section 904.3 also shall be dispersed. [**ADA/ABA-AG:** 227.3]

12.27.5 Food Service Lines. Food service lines shall comply with ICC/ANSI A117.1, Section 904.5. Where self-service shelves are provided, at least 50 percent, but no fewer than one, of each type provided shall comply with ICC/ANSI A117.1, Section 308. [**ADA/ABA-AG:** 227.4]

12.27.6 Queues and Waiting Lines. Queues and waiting lines servicing counters or check-out aisles required to comply with ICC/ANSI A117.1, Sections 904.4 or 904.3 shall comply with ICC/ANSI A117.1, Section 403. [**ADA/ABA-AG:** 227.5]

12.28 Depositories, Vending Machines, Change Machines, Mail Boxes, and Fuel Dispensers. [**ADA/ABA-AG:** 228]

12.28.1 General. Where provided, at least one of each type of depository, vending machine, change machine, and fuel

Copyright National Fire Protection Association
Provided by IHS under license with NFPA
No reproduction or networking permitted without license from IHS
Not for Resale

dispenser shall comply with ICC/ANSI A117.1, Section 309. [**ADA/ABA-AG:** 228.1]

*Exception: Drive-up only depositories shall not be required to comply with ICC/ANSI A117.1, Section 309. [**ADA/ABA-AG:** 228.1, Exception]*

12.28.2 Mail Boxes. Where mail boxes are provided in an interior location, at least 5 percent, but no fewer than one, of each type shall comply with ICC/ANSI A117.1, Section 309. In residential facilities, where mail boxes are provided for each residential dwelling unit, mail boxes complying with ICC/ANSI A117.1, Section 309 shall be provided for each residential dwelling unit required to provide mobility features complying with 12.45.5.2 through 12.45.5.5. [**ADA/ABA-AG:** 228.2]

12.29 Windows. [**ADA/ABA-AG:** 229] Where glazed openings are provided in accessible rooms or spaces for operation by occupants, at least one opening shall comply with ICC/ANSI A117.1, Section 309. Each glazed opening required by an administrative authority to be operable shall comply with ICC/ANSI A117.1, Section 309. [**ADA/ABA-AG:** 229.1]

*Exception No. 1: Glazed openings in residential dwelling units required to comply with 12.45.5 shall not be required to comply with Section 12.29. [**ADA/ABA-AG:** 229.1, Exception 1]*

*Exception No. 2: Glazed openings in guest rooms required to provide communication features and in guest rooms required to comply with 12.6.5.3 shall not be required to comply with Section 12.29. [**ADA/ABA-AG:** 229.1, Exception 2]*

12.30 Two-Way Communication Systems. [**ADA/ABA-AG:** 230] Where a two-way communication system is provided to gain admittance to a building or facility or to restricted areas within a building or facility, the system shall comply with ICC/ANSI A117.1, Section 708. [**ADA/ABA-AG:** 230.1]

12.31 Judicial Facilities. [**ADA/ABA-AG:** 231]

12.31.1 General. Judicial facilities shall comply with Section 12.31. [**ADA/ABA-AG:** 231]

12.31.2 Courtrooms. Each courtroom shall comply with ICC/ANSI A117.1, Section 808. [**ADA/ABA-AG:** 231.2]

12.31.3 Holding Cells. Where provided, central holding cells and court-floor holding cells shall comply with 12.31.3. [**ADA/ABA-AG:** 231.3]

12.31.3.1 Central Holding Cells. Where separate central holding cells are provided for an adult male, a juvenile male, an adult female, or a juvenile female, one of each type shall comply with 12.45.4.2. Where central holding cells are provided and are not separated by age or sex, at least one cell complying with 12.45.4.2 shall be provided. [**ADA/ABA-AG:** 231.3.1]

12.31.3.2 Court-Floor Holding Cells. Where separate court-floor holding cells are provided for an adult male, a juvenile male, an adult female, or a juvenile female, each courtroom shall be served by one cell of each type complying with 12.45.4.2. Where court-floor holding cells are provided and are not separated by age or sex, courtrooms shall be served by at least one cell complying with 12.45.4.2. Cells may serve more than one courtroom. [**ADA/ABA-AG:** 231.3.2]

12.31.4 Visiting Areas. Visiting areas shall comply with 12.31.4. [**ADA/ABA-AG:** 231.4]

12.31.4.1 Cubicles and Counters. At least 5 percent, but no fewer than one, of cubicles shall comply with ICC/ANSI A117.1, Section 902 on both the visitor and detainee sides. Where counters are provided, at least one shall comply with ICC/ANSI A117.1, Section 904.3.2 on both the visitor and detainee sides. [**ADA/ABA-AG:** 231.4.1]

*Exception: The detainee side of cubicles or counters at non-contact visiting areas not serving holding cells required to comply with Section 12.31 shall not be required to comply with ICC/ANSI A117.1, Section 902 or 904.3.2. [**ADA/ABA-AG:** 231.4.1, Exception]*

12.31.4.2 Partitions. Where solid partitions or security glazing separate visitors from detainees at least one of each type of cubicle or counter partition shall comply with ICC/ANSI A117.1, Section 904.6. [**ADA/ABA-AG:** 231.4.2]

12.32 Detention Facilities and Correctional Facilities. [**ADA/ABA-AG:** 232]

12.32.1 General. Buildings, facilities, or portions thereof, in which people are detained for penal or correction purposes, or in which the liberty of the inmates is restricted for security reasons shall comply with Section 12.32. [**ADA/ABA-AG:** 232.1]

12.32.2 General Holding Cells and General Housing Cells. General holding cells and general housing cells shall be provided in accordance with 12.32.2. [**ADA/ABA-AG:** 232.2]

*Exception: Alterations to cells shall not be required to comply except to the extent determined by the Attorney General. [**ADA/ABA-AG:** 232.2, Exception]*

12.32.2.1 Cells with Mobility Features. At least 2 percent, but no fewer than one, of the total number of cells in a facility shall provide mobility features complying with 12.45.4.2. [**ADA/ABA-AG:** 232.2.1]

12.32.2.2 Beds. In cells having more than 25 beds, at least 5 percent of the beds shall have clear floor space complying with ICC/ANSI A117.1, Section 806.3. [**ADA/ABA-AG:** 232.2.1.1]

12.32.2.3 Cells with Communication Features. At least 2 percent, but no fewer than one, of the total number of general holding cells and general housing cells equipped with audible emergency alarm systems and permanently installed telephones within the cell shall provide communication features complying with 12.45.4.3. [**ADA/ABA-AG:** 232.2.2]

12.32.3 Special Holding Cells and Special Housing Cells. Where special holding cells or special housing cells are provided, at least one cell serving each purpose shall provide mobility features complying with 12.45.4.2. Cells subject to this requirement include, but are not limited to, those used for purposes of orientation, protective custody, administrative or disciplinary detention or segregation, detoxification, and medical isolation. [**ADA/ABA-AG:** 232.3]

*Exception: Alterations to cells shall not be required to comply except to the extent determined by the Attorney General. [**ADA/ABA-AG:** 232.3, Exception]*

12.32.4 Medical Care Facilities. Patient bedrooms or cells required to comply with Section 12.23 shall be provided in addition to any medical isolation cells required to comply with 12.32.3. [**ADA/ABA-AG:** 232.4]

12.32.5 Visiting Areas. Visiting areas shall comply with 12.32.5. [**ADA/ABA-AG:** 232.5]

Copyright National Fire Protection Association
Provided by IHS under license with NFPA
No reproduction or networking permitted without license from IHS
Not for Resale

12.32.5.1 Cubicles and Counters. At least 5 percent, but no fewer than one, of cubicles shall comply with ICC/ANSI A117.1, Section 902 on both the visitor and detainee sides. Where counters are provided, at least one shall comply with ICC/ANSI A117.1, Section 904.3.2 on both the visitor and detainee or inmate sides. [**ADA/ABA-AG:** 232.5.1]

*Exception: The inmate or detainee side of cubicles or counters at non-contact visiting areas not serving holding cells or housing cells required to comply with Section 12.32 shall not be required to comply with ICC/ANSI A117.1, Sections 902 or 904.3.2. [**ADA/ABA-AG:** 232.5.1, Exception]*

12.32.5.2 Partitions. Where solid partitions or security glazing separate visitors from detainees or inmates at least one of each type of cubicle or counter partition shall comply with ICC/ANSI A117.1, Section 904.6. [**ADA/ABA-AG:** 232.5.2]

12.33 Residential Facilities. [**ADA/ABA-AG:** 233]

12.33.1 General. Residential dwelling units in lodging or rooming house and apartment building occupancies shall comply with Section 12.33. [**ADA/ABA-AG:** 233.1]

12.33.2 Minimum Number. Facilities with greater than four residential dwelling units shall comply with 12.33.2.

12.33.2.1 Residential Dwelling Units with Mobility Features. In facilities with residential dwelling units, at least 5 percent, but no fewer than one unit, of the total number of residential dwelling units shall provide mobility features complying with 12.45.5.2 through 12.45.5.5 and shall be on an accessible route as required by Section 12.6. [**ADA/ABA-AG:** 233.3.1.1].

12.33.2.2 Residential Dwelling Units with Communication Features. In facilities with residential dwelling units, at least 2 percent, but no fewer than one unit, of the total number of residential dwelling units shall provide communication features complying with 12.45.5.6. [**ADA/ABA-AG:** 233.3.1.2].

12.33.2.3 Additions. Where an addition to an existing building results in an increase in the number of residential dwelling units, the requirements of 12.33.2 shall apply only to the residential dwelling units that are added until the total number of residential dwelling units complies with the minimum number required by 12.33.2. Residential dwelling units required to comply with 12.33.2.1 shall be on an accessible route as required by Section 12.6. [**ADA/ABA-AG:** 233.3.3]

12.33.2.4 Alterations. Alterations shall comply with 12.33.2.4. [**ADA/ABA-AG:**233.3.4]

*Exception: Where compliance with 12.45.5.3, 12.45.5.4, or 12.45.5.5 is technically infeasible, or where it is technically infeasible to provide an accessible route to a residential dwelling unit, the entity shall be permitted to alter or construct a comparable residential dwelling unit to comply with 12.45.5.2 through 12.45.5.5 provided that the minimum number of residential dwelling units required by 12.33.2.1 and 12.33.2.2, as applicable, is satisfied. [**ADA/ABA-AG:** 233.3.4, Exception]*

12.33.2.4.1 Alterations to Vacated Buildings. Where a building is vacated for the purposes of alteration, and the altered building contains more than 15 residential dwelling units, at least 5 percent of the residential dwelling units shall comply with 12.45.5.2 through 12.45.5.5 and shall be on an accessible route as required by Section 12.6. In addition, at least 2 percent of the residential dwelling units shall comply with 12.45.5.6. [**ADA/ABA-AG:** 233.3.4.1]

12.33.2.4.2 Alterations to Individual Residential Dwelling Units. In individual residential dwelling units, where a bathroom or a kitchen is substantially altered, and at least one other room is altered, the requirements of 12.33.2 shall apply to the altered residential dwelling units until the total number of residential dwelling units complies with the minimum number required by 12.33.2.1 and 12.33.2.2. Residential dwelling units required to comply with 12.33.2.1 shall be on an accessible route as required by Section 12.6. [**ADA/ABA-AG:** 233.3.4.2]

*Exception: Where facilities contain 15 or fewer residential dwelling units, the requirements of 12.33.2.1 and 12.33.2.2 shall apply to the total number of residential dwelling units that are altered under a single contract or are developed as a whole, whether or not located on a common site. [**ADA/ABA-AG:** 233.3.4.2, Exception]*

12.33.2.5 Dispersion. Residential dwelling units required to provide mobility features complying with 12.45.5.2 through 12.45.5.5 and residential dwelling units required to provide communication features complying with 12.45.5.6 shall be dispersed among the various types of residential dwelling units in the facility and shall provide choices of residential dwelling units comparable to and integrated with those available to other residents. [**ADA/ABA-AG:** 233.3.5]

*Exception: Where multistory residential dwelling units are one of the types of residential dwelling units provided, one-story residential dwelling units shall be permitted as a substitute for multistory residential dwelling units where equivalent spaces and amenities are provided in the one-story residential dwelling unit. [**ADA/ABA-AG:** 233.3.5, Exception]*

12.33.3 Residential Dwelling Units with Usable Features. In facilities with residential dwelling units, all units that are not required to comply with 12.45.5.2 through 12.45.5.5 shall comply with ICC/ANSI 117.1 Section 1004 (Type B Units) and shall be on an accessible route as required by Section 12.6.

12.33.3.1 Alternative Unit Design. The requirements of ICC/ANSI 117.1 Section 1003 (Type A Units) shall be permitted to be used in lieu of Type B requirements.

12.33.3.2 Reduction in the Number of Type B Units. The number of Type B Units shall be permitted to be reduced according to 12.33.3.2.

12.33.3.2.1 Ground Floor Units Accessed by Elevator. Where an elevator is provided only as a means of creating an accessible route to sleeping units on a ground floor, the building shall not be considered an elevator building for purposes of this chapter. Only the units that are located on stories listed in 12.33.3.2.2 and 12.33.3.2.3 shall be required to be Type B units.

12.33.3.2.2 Non-Elevator Buildings.

12.33.3.2.2.1 Ground Floor Units. *Ground floor* shall mean a floor of a building with a building entrance on an accessible route. A building shall be permitted to have one or more ground floors. Sleeping units within a single structure separated by fire walls shall not constitute separate buildings.

12.33.3.2.2.2 Where the first floor containing sleeping units in a building is above grade, all units on that floor shall be served by a building entrance on an accessible route. This floor shall be considered to be a ground floor.

12.33.3.2.2.3 All units on such story(s) shall be Type B units.

12.33.3.2.3 Units on Stories Other Than Ground Floor. Units in buildings without elevators shall be required to be Type B on all stories that have an entrance near arrival points that

Copyright National Fire Protection Association
Provided by IHS under license with NFPA
No reproduction or networking permitted without license from IHS
Not for Resale

serve sleeping accommodations on that story if the following applies:

(1) The slopes of the undisturbed site measured between the entrance and all vehicular or pedestrian arrival points within 50 ft of the entrance do not exceed 10 percent.
(2) The slopes of the finished grade measured between the entrance and all vehicular or pedestrian arrival points within 50 ft of the entrance also do not exceed 10 percent.

12.33.3.2.3.1 If there are no vehicular or pedestrian arrival points within 50 ft of the planned entrance, the slope shall be measured to the closest vehicular or pedestrian arrival point.

12.33.3.2.3.2 In a multistory dwelling unit with elevator service to any of its floors, one floor that has elevator service shall be the primary entry to the unit, that same floor of the unit shall comply with the requirements for a Type B unit, and a Type B toilet room shall be provided on that floor.

12.33.3.2.4 Site Impracticality. Units shall not be required to be Type B when it is impractical to provide an accessible entrance served by an accessible route to the building due to site constraints.

12.33.3.2.4.1 Individual Building Test. It shall be considered impractical to provide an accessible entrance served by an accessible route when the terrain of the site with a single building having a common entrance for all units is as follows:

(1) The slopes of the undisturbed site measured between the planned entrance and all vehicular or pedestrian arrival points within 50 ft of the planned entrance exceed 10 percent.
(2) The slopes of the planned finished grade measured between the entrance and all vehicular or pedestrian arrival points within 50 ft of the planned entrance also exceed 10 percent.

12.33.3.2.4.2 If there are no vehicular or pedestrian arrival points within 50 ft of the planned entrance, the slope for the purposes of this section will be measured to the closest vehicular or pedestrian arrival point.

12.33.3.2.4.3 Site Analysis Test. For a site having multiple buildings, or a site with a single building with multiple entrances, impracticality of providing an accessible entrance served by an accessible route shall be established by the following steps:

(1) The percentage of the total buildable area of the undisturbed site with a natural grade less than 10 percent slope shall be calculated. The analysis of the existing slope (before grading) shall be done on a topographic survey with 2 ft contour intervals with slope determination made between each successive interval. The accuracy of the slope analysis shall be certified by a professional licensed engineer, landscape architect, architect, or surveyor.
(2) To determine the practicality of providing accessibility to planned multifamily dwellings based on the topography of the existing natural terrain, the minimum percentage of ground floor units to be made accessible shall equal the percentage of the total buildable area (not including floodplains, wetlands, or other restricted use areas) of the undisturbed site that has an existing natural grade of less than 10 percent slope.
(3) In addition to the percentage established in 12.33.3.2.4.3(1), all ground floor units in a building or ground floor units served by a particular entrance shall be made accessible if the entrance to the units is on an accessible route, defined as a walkway with a slope between the planned entrance and a pedestrian or vehicular arrival point that is no greater than 8.33 percent.

12.33.3.2.4.4 Site Impracticality Due to Unusual Characteristics. Unusual characteristics shall include sites located in a federally designated floodplain or coastal high-hazard area and sites subject to other similar requirements of law or code that the lowest floor or the lowest structural member of the lowest floor must be raised to a specified level at or above the base flood elevation. An accessible route to a building entrance shall be considered impractical due to unusual characteristics of the site when one of the following applies:

(1) The unusual site characteristics result in a difference in finished grade elevation exceeding 30 in. and 10 percent measured between an entrance and all vehicular or pedestrian arrival points within 50 ft of the planned entrance.
(2) If there are no vehicular or pedestrian arrival points within 50 ft of the planned entrance, the unusual characteristics result in a difference in finished grade elevation exceeding 30 in. and 10 percent measured between an entrance and the closest vehicular or pedestrian arrival point.

(A) Regardless of site considerations described in 12.33.3.2.4.4(1) and (2), an accessible entrance on an accessible route shall be practical when one of the following applies:

(1) There is an elevator connecting the parking area with the dwelling units on a ground floor.
    (a) Where a building elevator is provided only as a means of creating an accessible route to dwelling units on a ground floor, the building is not considered an elevator building for purposes of these guidelines, and only the ground floor dwelling units would be covered.
    (b) If the building elevator is provided as a means of access to dwelling units other than dwelling units on a ground floor, then the building is an elevator building that is a covered multifamily dwelling, and the elevator in that building must provide accessibility to all dwelling units in the building, regardless of the slope of the natural terrain.
(2) An elevated walkway is planned between a building entrance and a vehicular or pedestrian arrival point and the planned walkway has a slope no greater than 10 percent.

12.33.3.2.4.5 At least 20 percent of the total ground floor units in non-elevator buildings, on any site, shall be Type B units.

12.33.3.2.5 Base Flood Elevation. Accessible entrances on accessible routes shall not be required for a building where the lowest floor or the lowest structural floor member of non-elevator buildings are required to be raised above existing grade to or above the base flood elevation and the following:

(1) The difference in elevation between the minimum required floor elevation at the primary entrances and vehicular and pedestrian arrival points within 50 ft (15,240 mm) exceeds 30 in. (762 mm).
(2) The slope between the minimum required floor elevation at the primary entrances and vehicular and pedestrian arrival points within 50 ft (15,240 mm) exceeds 10 percent.

Copyright National Fire Protection Association
Provided by IHS under license with NFPA
No reproduction or networking permitted without license from IHS
Not for Resale

12.33.3.2.5.1 Where no such arrival points are within 50 ft (15,240 mm) of the primary entrances, the closest arrival point shall be used.

12.34 Amusement Rides. [**ADA/ABA-AG:** 234)]

12.34.1 General. Amusement rides shall comply with Section 12.34. [**ADA/ABA-AG:** 234.1]

*Exception: Mobile or portable amusement rides shall not be required to comply with Section 12.34. [**ADA/ABA-AG:** 234.1, Exception]*

12.34.2 Load and Unload Areas. Load and unload areas serving amusement rides shall comply with 12.45.8.2.3. [**ADA/ABA-AG:** 234.2]

12.34.3 Minimum Number. Amusement rides shall provide at least one wheelchair space complying with 12.45.8.2.4, or at least one amusement ride seat designed for transfer complying with 12.45.8.2.5, or at least one transfer device complying with 12.45.8.2.6. [**ADA/ABA-AG:** 234.3]

*Exception No. 1: Amusement rides that are controlled or operated by the rider shall not be required to comply with 12.34.3. [**ADA/ABA-AG:** 234.3, Exception 1]*

*Exception No. 2: Amusement rides designed primarily for children, where children are assisted on and off the ride by an adult, shall not be required to comply with 12.34.3. [**ADA/ABA-AG:** 234.3, Exception 2]*

*Exception No. 3: Amusement rides that do not provide amusement ride seats shall not be required to comply with 12.34.3. [**ADA/ABA-AG:** 234.3, Exception 3]*

12.34.4 Existing Amusement Rides. Where existing amusement rides are altered, the alteration shall comply with 12.34.4. [**ADA/ABA-AG:** 234.4]

12.34.4.1 Load and Unload Areas. Where load and unload areas serving existing amusement rides are newly designed and constructed, the load and unload areas shall comply with 12.45.8.2.3. [**ADA/ABA-AG:** 234.4.1]

12.34.4.2 Minimum Number. Where the structural or operational characteristics of an amusement ride are altered to the extent that the amusement ride's performance differs from that specified by the manufacturer or the original design, the amusement ride shall comply with 12.34.3. [**ADA/ABA-AG:** 234.4.2]

12.35 Recreational Boating Facilities. [**ADA/ABA-AG:** 235] Recreational boating facilities shall comply with Section 12.35. [**ADA/ABA-AG:** 235.1]

12.35.1 Boat Slips. Boat slips complying with 12.45.9.1 shall be provided in accordance with Table 12.35.1. Where the number of boat slips is not identified, each 40 ft (12 m) of boat slip edge provided along the perimeter of the pier shall be counted as one boat slip for the purpose of Section 12.35. [**ADA/ABA-AG:** 235.2]

12.35.2 Dispersion. Boat slips complying with 12.45.9 shall be dispersed throughout the various types of boat slips provided. Where the minimum number of boat slips required to comply with 12.45.9 has been met, no further dispersion shall be required. [**ADA/ABA-AG:** 235.2.1]

12.35.3 Boarding Piers at Boat Launch Ramps. Where boarding piers are provided at boat launch ramps, at least 5 percent, but no fewer than one, of the boarding piers shall comply with 12.45.9.2.2. [**ADA/ABA-AG:** 235.3]

Table 12.35.1 Boat Slips

Total Number of Boat Slips Provided in Facility	Minimum Number of Required Accessible Boat Slips
1–25	1
26–50	2
51–100	3
101–150	4
151–300	5
301–400	6
401–500	7
501–600	8
601–700	9
701–800	10
801–900	11
901–1000	12
≥1001	12, plus 1 for every 100, or fraction thereof, >1000

[**ADA/ABA-AG:** Table 235.2]

12.36 Exercise Machines and Equipment. [**ADA/ABA-AG:** 236]

12.36.1 General. At least one of each type of exercise machine and equipment shall comply with 12.45.10. [**ADA/ABA-AG:** 236.1]

12.37 Fishing Piers and Platforms. [**ADA/ABA-AG:** 237]

12.37.1 General. Fishing piers and platforms shall comply with 12.45.11. [**ADA/ABA-AG:** 237.1]

12.38 Golf Facilities. [**ADA/ABA-AG:** 238]

12.38.1 General. Golf facilities shall comply with Section 12.38. [**ADA/ABA-AG:** 238.1]

12.38.1.1 Teeing Grounds. Where one teeing ground is provided for a hole, the teeing ground shall be designed and constructed so that a golf car can enter and exit the teeing ground. Where two teeing grounds are provided for a hole, the forward teeing ground shall be designed and constructed so that a golf car can enter and exit the teeing ground. Where three or more teeing grounds are provided for a hole, at least two teeing grounds, including the forward teeing ground, shall be designed and constructed so that a golf car can enter and exit each teeing ground. [**ADA/ABA-AG:** 238.2.1]

*Exception: In existing golf courses, the forward teeing ground shall not be required to be one of the teeing grounds on a hole designed and constructed so that a golf car can enter and exit the teeing ground where compliance is not feasible due to terrain. [**ADA/ABA-AG:** 238.2.1, Exception]*

12.38.1.2 Putting Greens. Putting greens shall be designed and constructed so that a golf car can enter and exit the putting green. [**ADA/ABA-AG:** 238.2.2]

12.38.1.3 Weather Shelters. Where provided, weather shelters shall be designed and constructed so that a golf car can enter and exit the weather shelter and shall comply with 12.45.12.4. [**ADA/ABA-AG:** 238.2.3]

12.38.2 Practice Putting Greens, Practice Teeing Grounds, and Teeing Stations at Driving Ranges. At least 5 percent, but no fewer than one, of practice putting greens, practice teeing grounds, and teeing stations at driving ranges shall be

Copyright National Fire Protection Association
Provided by IHS under license with NFPA
No reproduction or networking permitted without license from IHS
Not for Resale

designed and constructed so that a golf car can enter and exit the practice putting greens, practice teeing grounds, and teeing stations at driving ranges. [**ADA/ABA-AG:** 238.3]

12.39 Miniature Golf Facilities. [**ADA/ABA-AG:** 239]

12.39.1 General. Miniature golf facilities shall comply with Section 12.39. [**ADA/ABA-AG:** 239.1]

12.39.2 Minimum Number. At least 50 percent of holes on miniature golf courses shall comply with 12.45.13.3. [**ADA/ABA-AG:** 239.2]

12.39.3 Miniature Golf Course Configuration. Miniature golf courses shall be configured so that the holes complying with 12.45.13.3 are consecutive. Miniature golf courses shall provide an accessible route from the last hole complying with 12.45.13.3 to the course entrance or exit without requiring travel through any other holes on the course. [**ADA/ABA-AG:** 239.3]

*Exception: One break in the sequence of consecutive holes shall be permitted provided that the last hole on the miniature golf course is the last hole in the sequence. [**ADA/ABA-AG:** 239.3, Exception]*

12.40 Play Areas. [**ADA/ABA-AG:** 240] Play areas for children ages 2 and over shall comply with Section 12.40. Where separate play areas are provided within a site for specific age groups, each play area shall comply with Section 12.40. [**ADA/ABA-AG:** 240.1]

*Exception No. 1: Play areas located in family child care facilities where the proprietor actually resides shall not be required to comply with Section 12.40. [**ADA/ABA-AG:** 240.1, Exception 1]*

*Exception No. 2: In existing play areas, where play components are relocated for the purposes of creating safe use zones and the ground surface is not altered or extended for more than one use zone, the play area shall not be required to comply with Section 12.40. [**ADA/ABA-AG:** 240.1, Exception 2]*

*Exception No. 3: Amusement attractions shall not be required to comply with Section 12.40. [**ADA/ABA-AG:** 240.1, Exception 3]*

*Exception No. 4: Where play components are altered and the ground surface is not altered, the ground surface shall not be required to comply with 12.45.14.2.6 unless required by 12.2.4. [**ADA/ABA-AG:** 240.1, Exception 4]*

12.40.1 Additions. Where play areas are designed and constructed in phases, the requirements of Section 12.40 shall apply to each successive addition so that when the addition is completed, the entire play area complies with all the applicable requirements of Section 12.40. [**ADA/ABA-AG:** 240.1.1]

12.40.2 Play Components. Where provided, play components shall comply with 12.40.2. [**ADA/ABA-AG:** 240.2]

12.40.2.1 Ground Level Play Components. Ground level play components shall be provided in the number and types required by 12.40.2.1. Ground level play components that are provided to comply with 12.40.2.1.1 shall be permitted to satisfy the additional number required by 12.40.2.1.2 if the minimum required types of play components are satisfied. Where two or more required ground level play components are provided, they shall be dispersed throughout the play area and integrated with other play components. [**ADA/ABA-AG:** 240.2.1]

12.40.2.1.1 Minimum Number and Types. Where ground level play components are provided, at least one of each type shall be on an accessible route and shall comply with 12.45.14.4. [**ADA/ABA-AG:** 240.2.1.1]

12.40.2.1.2 Additional Number and Types. Where elevated play components are provided, ground level play components shall be provided in accordance with Table 12.40.2.1.2 and shall comply with 12.45.14.2.4.2. [**ADA/ABA-AG:** 240.2.1.2]

Table 12.40.2.1.2 Number and Types of Ground Level Play Components Required to be on Accessible Routes

Number of Elevated Play Components Provided	Minimum Number of Ground Level Play Components Required to Be on an Accessible Route	Minimum Number of Different Types of Ground Level Play Components Required to Be on an Accessible Route
1	NA	NA
2–4	1	1
5–7	2	2
8–10	3	3
11–13	4	3
14–16	5	3
17–19	6	3
20–22	7	4
23–25	8	4
≥26	8, plus 1 for each additional 3, or fraction thereof, >25	5

NA: Not applicable.
[**ADA/ABA-AG:** Table 240.2.1.2]

*Exception: If at least 50 percent of the elevated play components are connected by a ramp and at least three of the elevated play components connected by the ramp are different types of play components, the play area shall not be required to comply with 12.40.2.1.2. [**ADA/ABA-AG:** 240.2.1.2, Exception]*

12.40.2.2 Elevated Play Components. Where elevated play components are provided, at least 50 percent shall be on an accessible route and shall comply with 12.45.14.4. [**ADA/ABA-AG:** 240.2.2]

12.41 Saunas and Steam Rooms. [**ADA/ABA-AG:** 241]

12.41.1 General. Where provided, saunas and steam rooms shall comply with Section 12.41. [**ADA/ABA-AG:** 241.1]

*Exception: Where saunas or steam rooms are clustered at a single location, no more than 5 percent of the saunas and steam rooms, but no fewer than one, of each type in each cluster shall be required to comply with Section 12.41. [**ADA/ABA-AG:** 241.1, Exception]*

12.41.2 Bench. Where seating is provided in saunas and steam rooms, at least one bench shall comply with ICC/ANSI A117.1, Section 903. Doors shall not swing into the clear floor space required by ICC/ANSI A117.1, Section 903.2. [**ADA/ABA-AG:** 241.2]

*Exception: A readily removable bench shall be permitted to obstruct the turning space required by 12.41.3 and the clear floor or ground space required by ICC/ANSI A117.1, Section 903.2. [**ADA/ABA-AG:** 241.2, Exception]*

12.41.3 Turning Space. A turning space complying with ICC/ANSI A117.1, Section 304 shall be provided within saunas and steam rooms. [**ADA/ABA-AG:** 241.3]

Copyright National Fire Protection Association
Provided by IHS under license with NFPA
No reproduction or networking permitted without license from IHS
Not for Resale

12.42 Swimming Pools, Wading Pools, and Spas. [**ADA/ABA-AG:** 242]

12.42.1 General. Swimming pools, wading pools, and spas shall comply with Section 12.42. [**ADA/ABA-AG:** 242.1]

12.42.2 Swimming Pools. At least two accessible means of entry shall be provided for swimming pools. Accessible means of entry shall be swimming pool lifts complying with 12.45.15.2; sloped entries complying with 12.45.15.3; transfer walls complying with 12.45.15.4; transfer systems complying with 12.45.15.5; and pool stairs complying with 12.45.15.6. At least one accessible means of entry provided shall comply with 12.45.15.2 or 12.45.15.3. [**ADA/ABA-AG:** 242.2]

*Exception No. 1: Where a swimming pool has less than 300 linear feet (91 linear meters) of swimming pool wall, no more than one accessible means of entry shall be required provided that the accessible means of entry is a swimming pool lift complying with 12.45.15.2 or sloped entry complying with 12.45.15.3. [**ADA/ABA-AG:** 242.2, Exception 1]*

*Exception No. 2: Wave action pools, leisure rivers, sand bottom pools, and other pools where user access is limited to one area shall not be required to provide more than one accessible means of entry provided that the accessible means of entry is a swimming pool lift complying with 12.45.15.2, a sloped entry complying with 12.45.15.3, or a transfer system complying with 12.45.15.5. [**ADA/ABA-AG:** 242.2, Exception 2]*

*Exception No. 3: Catch pools shall not be required to provide an accessible means of entry provided that the catch pool edge is on an accessible route. [**ADA/ABA-AG:** 242.2, Exception 3]*

12.42.3 Wading Pools. At least one accessible means of entry shall be provided for wading pools. Accessible means of entry shall comply with sloped entries complying with 12.45.15.3. [**ADA/ABA-AG:** 242.3]

12.42.4 Spas. At least one accessible means of entry shall be provided for spas. Accessible means of entry shall comply with swimming pool lifts complying with 12.45.15.2; transfer walls complying with 12.45.15.4; or transfer systems complying with 12.45.15.5. [**ADA/ABA-AG:** 242.4]

*Exception: Where spas are provided in a cluster, no more than 5 percent, but no fewer than one, spa in each cluster shall be required to comply with 12.42.4. [**ADA/ABA-AG:** 242.4, Exception]*

12.43 Shooting Facilities with Firing Positions. [**ADA/ABA-AG:** 243]

12.43.1 General. Where shooting facilities with firing positions are designed and constructed at a site, at least 5 percent, but no fewer than one, of each type of firing position shall comply with 12.45.15. [**ADA/ABA-AG:** 243.1]

12.44 Technical Requirements.

12.44.1 General. Buildings and facilities that are required to be accessible shall comply with the requirements of ICC/ANSI A117.1.

12.44.2 Non-Applicable Requirements. The technical requirement of 12.44.3 shall apply in lieu of ICC/ANSI A117.1, Section 605.2.

12.44.3 Height and Depth. Urinals shall be the stall-type or the wall-hung type with the rim 17 in. (430 mm) maximum above the finish floor or ground. Urinals shall be 13½ in. (345 mm) deep minimum measured from the outer face of the urinal rim to the back of the fixture. [**ADA/ABA-AG:**605.2]

12.45 Additional Technical Requirements. The technical requirements of Section 12.45 shall apply in addition to the requirements of ICC/ANSI A117.1.

12.45.1 Break Out Opening in Doors, Doorways, and Gates in Accessible Routes. Where doors and gates without standby power are a part of a means of egress, the clear break out opening at swinging or sliding doors and gates shall be 32 in. (815 mm) minimum when operated in emergency mode. [**ADA/ABA-AG:** 404.3.6]

12.45.2 Health Care Occupancies. [**ADA/ABA-AG:** 805]

12.45.2.1 General. Health care occupancy patient or resident sleeping rooms required to provide mobility features shall comply with 12.45.2. [**ADA/ABA-AG:** 805.1]

12.45.2.2 Turning Space. Turning space complying with ICC/ANSI A117.1, Section 304 shall be provided within the room. [**ADA/ABA-AG:** 805.2]

12.45.2.3 Clear Floor or Ground Space. A clear floor space complying with ICC/ANSI A117.1, Section 305 shall be provided on each side of the bed. The clear floor space shall be positioned for parallel approach to the side of the bed. [**ADA/ABA-AG:** 805.3]

12.45.2.4 Toilet and Bathing Rooms. Toilet and bathing rooms that are provided as part of a patient or resident sleeping room shall comply with ICC/ANSI A117.1, Section 603. Where provided, no fewer than one water closet, one lavatory, and one bathtub or shower shall comply with the applicable requirements of ICC/ANSI A117.1, Sections 603 through 610. [**ADA/ABA-AG:** 805.4]

12.45.3 Hotel and Motel Guest Rooms. [**ADA/ABA-AG:** 806)]

12.45.3.1 General. Transient lodging guest rooms shall comply with 12.45.3. Guest rooms required to provide mobility features shall comply with 12.45.3.2. Guest rooms required to provide communication features shall comply with 12.45.3.3. [**ADA/ABA-AG:** 806.1]

12.45.3.2 Guest Rooms with Mobility Features. Guest rooms required to provide mobility features shall comply with 12.45.3.2. [**ADA/ABA-AG:** 806.2]

12.45.3.2.1 Living and Dining Areas. Living and dining areas shall be accessible. [**ADA/ABA-AG:** 806.2.1]

12.45.3.2.2 Exterior Spaces. Exterior spaces, including patios, terraces, and balconies, that serve the guest room shall be accessible. [**ADA/ABA-AG:** 806.2.2]

12.45.3.2.3 Sleeping Areas. At least one sleeping area shall provide a clear floor space complying with ICC/ANSI A117.1, Section 305 on both sides of a bed. The clear floor space shall be positioned for parallel approach to the side of the bed. [**ADA/ABA-AG:** 806.2.3]

*Exception: Where a single clear floor space complying with ICC/ANSI A117.1, Section 305 positioned for parallel approach is provided between two beds, a clear floor or ground space shall not be required on both sides of a bed. [**ADA/ABA-AG:** 806.2.3, Exception]*

12.45.3.2.4 Toilet and Bathing Facilities. No fewer than one water closet, one lavatory, and one bathtub or shower shall comply with ICC/ANSI A117.1, Section 603. In addition, required roll-in shower compartments shall comply with ICC/ANSI A117.1, Sections 608.2.2 or 608.2.3. [**ADA/ABA-AG:** 806.2.4]

Copyright National Fire Protection Association
Provided by IHS under license with NFPA
No reproduction or networking permitted without license from IHS
Not for Resale

12.45.3.2.5 Vanity Counter Top Space. If vanity counter top space is provided in non-accessible guest toilet or bathing rooms, comparable vanity counter top space, in terms of size and proximity to the lavatory, shall also be provided in accessible guest toilet or bathing rooms. [**ADA/ABA-AG:** 806.2.4.1]

12.45.3.2.6 Kitchens and Kitchenettes. Kitchens and kitchenettes shall comply with ICC/ANSI A117.1, Section 804. [**ADA/ABA-AG:** 806.2.5]

12.45.3.2.7 Turning Space. Turning space complying with ICC/ANSI A117.1, Section 304 shall be provided within the guest room. [**ADA/ABA-AG:** 806.2.6]

12.45.3.3 Guest Rooms with Communication Features. Guest rooms required to provide communication features shall comply with ICC/ANSI A117.1, Section 806.3. [**ADA/ABA-AG:** 806.3]

12.45.3.3.1 Alarms. Where emergency warning systems are provided, alarms complying with *NFPA 72* shall be provided. [**ADA/ABA-AG:** 806.3.1]

12.45.3.3.2 Notification Devices. Visible notification devices shall be provided to alert room occupants of incoming telephone calls and a door knock or bell. Notification devices shall not be connected to visible alarm signal appliances. Telephones shall have volume controls compatible with the telephone system and shall comply with ICC/ANSI A117.1, Section 704.3. Telephones shall be served by an electrical outlet complying with ICC/ANSI A117.1, Section 309 located within 48 in. (1220 mm) of the telephone to facilitate the use of a TTY. [**ADA/ABA-AG:** 806.3.2]

12.45.3.4 Break Out Opening. Where doors and gates without standby power are a part of a means of egress, the clear break out opening at swinging or sliding doors and gates shall be 32 in. (815 mm) minimum when operated in emergency mode. [**ADA/ABA-AG:** 404.3.6]

*Exception: Where manual swinging doors and gates comply with ICC/ANSI A117.1, Section 404.2 and serve the same means of egress compliance with 12.45.3.4 shall not be required. [**ADA/ABA-AG:** 404.3.6, Exception]*

12.45.4 Holding Cells and Housing Cells. [**ADA/ABA-AG:** 807]

12.45.4.1 General. Holding cells and housing cells shall comply with 12.45.4. [**ADA/ABA-AG:** 807.1]

12.45.4.2 Cells with Mobility Features. Cells required to provide mobility features shall comply with 12.45.4.2. [**ADA/ABA-AG:** 807.2]

12.45.4.2.1 Turning Space. Turning space complying with ICC/ANSI A117.1, Section 304 shall be provided within the cell. [**ADA/ABA-AG:** 807.2.1]

12.45.4.2.2 Benches. Where benches are provided, at least one bench shall comply with ICC/ANSI A117.1, Section 903. [**ADA/ABA-AG:** 807.2.2]

12.45.4.2.3 Toilet and Bathing Facilities. Toilet facilities or bathing facilities that are provided as part of a cell shall comply with ICC/ANSI A117.1, Section 603. Where provided, no fewer than one water closet, one lavatory, and one bathtub or shower shall comply with the applicable requirements of ICC/ANSI A117.1, Sections 603 through 610. [**ADA/ABA-AG:** 807.2.4]

12.45.5 Residential Dwelling Units. [**ADA/ABA-AG:** 809]

12.45.5.1 General. Residential dwelling units shall comply with 12.45.5. Residential dwelling units required to provide mobility features shall comply with 12.45.5.2 through 12.45.5.5. [**ADA/ABA-AG:** 809.1]

12.45.5.2 Communication Features. Residential dwelling units required to provide communication features shall comply with 12.45.5.6. [**ADA/ABA-AG:** 809.5]

12.45.5.3 Accessible Routes. Accessible routes complying with ICC/ANSI A117.1, Chapter 4 shall be provided within residential dwelling units in accordance with 12.45.5.3. [**ADA/ABA-AG:** 809.2]

*Exception: Accessible routes shall not be required to or within unfinished attics or unfinished basements. [**ADA/ABA-AG:** 809.2, Exception]*

12.45.5.3.1 Location. At least one accessible route shall connect all spaces and elements which are a part of the residential dwelling unit. Where only one accessible route is provided, it shall not pass through bathrooms, closets, or similar spaces. [**ADA/ABA-AG:** 809.2.1]

12.45.5.3.2 Turning Space. All rooms served by an accessible route shall provide a turning space complying with ICC/ANSI A117.1, Section 304. [**ADA/ABA-AG:** 809.2.2]

*Exception: Turning space shall not be required in exterior spaces 30 in. (760 mm) maximum in depth or width. [**ADA/ABA-AG:** 809.2.2, Exception]*

12.45.5.4 Kitchen. Where a kitchen is provided, it shall comply with ICC/ANSI A117.1, Section 804. [**ADA/ABA-AG:** 809.3]

12.45.5.5 Toilet Facilities and Bathing Facilities. At least one toilet facility and bathing facility shall comply with ICC/ANSI A117.1, Sections 603 through 610. At least one of each type of fixture provided shall comply with applicable requirements of ICC/ANSI A117.1, Sections 603 through 610. Toilet and bathing fixtures required to comply with ICC/ANSI A117.1, Sections 603 through 610 shall be located in the same toilet and bathing area, such that travel between fixtures does not require travel between other parts of the residential dwelling unit. [**ADA/ABA-AG:** 809.4]

12.45.5.6 Residential Dwelling Units with Communication Features. Residential dwelling units required to provide communication features shall comply with 12.45.5.6. [**ADA/ABA-AG:** 809.5]

12.45.5.6.1 Building Fire Alarm System. Where a building fire alarm system is provided, the system wiring shall be extended to a point within the residential dwelling unit in the vicinity of the residential dwelling unit smoke detection system. [**ADA/ABA-AG:** 809.5.1]

12.45.5.6.1.1 Alarm Appliances. Where alarm appliances are provided within a residential dwelling unit as part of the building fire alarm system, they shall comply with *NFPA 72*. [**ADA/ABA-AG:** 809.5.1.1]

12.45.5.6.1.2 Activation. All visible alarm appliances provided within the residential dwelling unit for building fire alarm notification shall be activated upon activation of the building fire alarm in the portion of the building containing the residential dwelling unit. [**ADA/ABA-AG:** 809.5.1.2]

12.45.5.6.2 Residential Dwelling Unit Smoke Detection System. Residential dwelling unit smoke detection systems shall comply with *NFPA 72*. [**ADA/ABA-AG:** 809.5.2]

--`,,```,,,,````-`-`,,`,,`,`,,`---

Copyright National Fire Protection Association
Provided by IHS under license with NFPA
No reproduction or networking permitted without license from IHS
Not for Resale

12.45.5.6.2.1 Activation. All visible alarm appliances provided within the residential dwelling unit for smoke detection notification shall be activated upon smoke detection. [**ADA/ABA-AG:** 809.5.2.2]

12.45.5.6.3 Interconnection. The same visible alarm appliances shall be permitted to provide notification of residential dwelling unit smoke detection and building fire alarm activation. [**ADA/ABA-AG:** 809.5.3]

12.45.5.6.4 Prohibited Use. Visible alarm appliances used to indicate residential dwelling unit smoke detection or building fire alarm activation shall not be used for any other purpose within the residential dwelling unit. [**ADA/ABA-AG:** 809.5.4]

12.45.5.6.5 Residential Dwelling Unit Primary Entrance. Communication features shall be provided at the residential dwelling unit primary entrance complying with 12.45.5.6.5. [**ADA/ABA-AG:** 809.5.5]

12.45.5.6.5.1 Notification. A hard-wired electric doorbell shall be provided. A button or switch shall be provided outside the residential dwelling unit primary entrance. Activation of the button or switch shall initiate an audible tone and visible signal within the residential dwelling unit. Where visible doorbell signals are located in sleeping areas, they shall have controls to deactivate the signal. [**ADA/ABA-AG:** 809.5.5.1]

12.45.5.6.5.2 Identification. A means for visually identifying a visitor without opening the residential dwelling unit entry door shall be provided and shall allow for a minimum 180 degree range of view. [**ADA/ABA-AG:** 809.5.5.2]

12.45.5.6.6 Site, Building, or Floor Entrance. Where a system, including a closed-circuit system, permitting voice communication between a visitor and the occupant of the residential dwelling unit is provided, the system shall comply with 12.45.5.6.6. [**ADA/ABA-AG:** 809.5.6]

12.45.5.6.6.1 Common Use or Public Use System Interface. The common use or public use system interface shall include the capability of supporting voice and TTY communication with the residential dwelling unit interface. [**ADA/ABA-AG:** 708.4.1]

12.45.5.6.6.2 Residential Dwelling Unit Interface. The residential dwelling unit system interface shall include a telephone jack capable of supporting voice and TTY communication with the common use or public use system interface. [**ADA/ABA-AG:** 708.4.2]

12.45.6 Special Rooms, Spaces, and Elements — Transportation Facilities. Station platforms shall be positioned to coordinate with vehicles in accordance with the applicable requirements of 36 CFR Part 1192. Low-level platforms shall be 8 in. (205 mm) minimum above top of rail. [**ADA/ABA-AG:** 810.5.3]

*Exception: Where vehicles are boarded from sidewalks or street-level, low-level platforms shall be permitted to be less than 8 in. (205 mm). [**ADA/ABA-AG:** 810.5.3, Exception]*

12.45.7 Storage. [**ADA/ABA-AG:** 811]

12.45.7.1 General. Storage shall comply with 12.45.7. [**ADA/ABA-AG:** 811.1]

12.45.7.2 Clear Floor or Ground Space. A clear floor or ground space complying with ICC/ANSI A117.1, Section 305 shall be provided. [**ADA/ABA-AG:** 811.2]

12.45.7.3 Height. Storage elements shall comply with at least one of the reach ranges specified in ICC/ANSI A117.1, Section 308. [**ADA/ABA-AG:** 811.3]

12.45.7.4 Operable Parts. Operable parts shall comply with ICC/ANSI A117.1, Section 309. [**ADA/ABA-AG:** 811.4]

12.45.8 Recreational Facilities.

12.45.8.1 General. [**ADA/ABA-AG:** 1001]

12.45.8.1.1 Scope. The provisions of 12.45.8 shall apply where required by Sections 12.1 through 12.43 of this *Code.* [**ADA/ABA-AG:** 1001.1]

12.45.8.2 Amusement Rides. [**ADA/ABA-AG:** 1002)]

12.45.8.2.1 General. Amusement rides shall comply with 12.45.8.2. [**ADA/ABA-AG:** 1002.1]

12.45.8.2.2 Accessible Routes. Accessible routes serving amusement rides shall comply with ICC/ANSI A117.1, Chapter 4. [**ADA/ABA-AG:** 1002.2]

*Exception No. 1: In load or unload areas and on amusement rides, where compliance with ICC/ANSI A117.1, Section 405.2 is not structurally or operationally feasible, ramp slope shall be permitted to be 1:8 maximum. [**ADA/ABA-AG:** 1002.2, Exception 1]*

*Exception No. 2: In load or unload areas and on amusement rides, handrails provided along walking surfaces complying with ICC/ANSI A117.1, Section 403 and required on ramps complying with ICC/ANSI A117.1, Section 405 shall not be required to comply with ICC/ANSI A117.1, Section 505 where compliance is not structurally or operationally feasible. [**ADA/ABA-AG:** 1002.2, Exception 2]*

12.45.8.2.3 Load and Unload Areas. A turning space complying with ICC/ANSI A117.1, Sections 304.2 and 304.3 shall be provided in load and unload areas. [**ADA/ABA-AG:** 1002.3]

12.45.8.2.4 Wheelchair Spaces in Amusement Rides. Wheelchair spaces in amusement rides shall comply with 12.45.8.2.4. [**ADA/ABA-AG:** 1002.4]

12.45.8.2.4.1 Floor or Ground Surface. The floor or ground surface of wheelchair spaces shall be stable and firm. [**ADA/ABA-AG:** 1002.4.1]

12.45.8.2.4.2 Slope. The floor or ground surface of wheelchair spaces shall have a slope not steeper than 1:48 when in the load and unload position. [**ADA/ABA-AG:** 1002.4.2]

12.45.8.2.4.3 Gaps. Floors of amusement rides with wheelchair spaces and floors of load and unload areas shall be coordinated so that, when amusement rides are at rest in the load and unload position, the vertical difference between the floors shall be within plus or minus ⅝ in. (16 mm) and the horizontal gap shall be 3 in. (75 mm) maximum under normal passenger load conditions. [**ADA/ABA-AG:** 1002.4.3]

*Exception: Where compliance is not operationally or structurally feasible, ramps, bridge plates, or similar devices complying with the applicable requirements of 36 CFR 1192.83(c) shall be provided. [**ADA/ABA-AG:** 1002.4.3, Exception]*

12.45.8.2.4.4 Clearances. Clearances for wheelchair spaces shall comply with 12.45.8.2.4.4. [**ADA/ABA-AG:** 1002.4.4]

*Exception No. 1: Where provided, securement devices shall be permitted to overlap required clearances. [**ADA/ABA-AG:** 1002.4.4, Exception 1]*

Copyright National Fire Protection Association
Provided by IHS under license with NFPA
No reproduction or networking permitted without license from IHS
Not for Resale

*Exception No. 2: Wheelchair spaces shall be permitted to be mechanically or manually repositioned. [**ADA/ABA-AG:** 1002.4.4, Exception 2]*

Exception No. 3: Wheelchair spaces shall not be required to comply with ICC/ANSI A117.1, Section 307.4.

12.45.8.2.4.5 Width and Length. Wheelchair spaces shall provide a clear width of 30 in. (760 mm) minimum and a clear length of 48 in. (1220 mm) minimum measured to 9 in. (230 mm) minimum above the floor surface. [**ADA/ABA-AG:** 1002.4.4, Exception 3]

12.45.8.2.4.6 Side Entry. Where wheelchair spaces are entered only from the side, amusement rides shall be designed to permit sufficient maneuvering clearance for individuals using a wheelchair or mobility aid to enter and exit the ride. [**ADA/ABA-AG:** 1002.4.4.2]

12.45.8.2.4.7 Permitted Protrusions in Wheelchair Spaces. Objects are permitted to protrude a distance of 6 in. (150 mm) maximum along the front of the wheelchair space, where located 9 in. (230 mm) minimum and 27 in. (685 mm) maximum above the floor or ground surface of the wheelchair space. Objects are permitted to protrude a distance of 25 in. (635 mm) maximum along the front of the wheelchair space, where located more than 27 in. (685 mm) above the floor or ground surface of the wheelchair space in accordance with Figure 12.45.8.2.4.7. [**ADA/ABA-AG:** 1002.4.4.3]

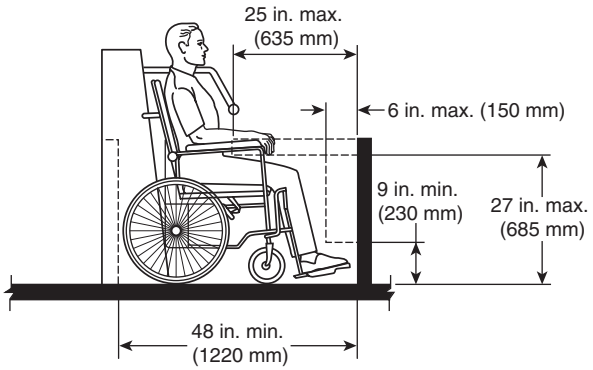

FIGURE 12.45.8.2.4.7 Protrusions in Wheelchair Spaces in Amusement Rides. [ADA/ABA-AG: Figure 1002.4.4.3]

12.45.8.2.4.8 Ride Entry. Openings providing entry to wheelchair spaces on amusement rides shall be 32 in. (815 mm) minimum clear. [**ADA/ABA-AG:** 1002.4.5]

12.45.8.2.4.9 Approach. One side of the wheelchair space shall adjoin an accessible route when in the load and unload position. [**ADA/ABA-AG:** 1002.4.6]

12.45.8.2.4.10 Companion Seats. Where the interior width of the amusement ride is greater than 53 in. (1345 mm), seating is provided for more than one rider, and the wheelchair is not required to be centered within the amusement ride, a companion seat shall be provided for each wheelchair space. [**ADA/ABA-AG:** 1002.4.7]

12.45.8.2.4.11 Shoulder-to-Shoulder Seating. Where an amusement ride provides shoulder-to-shoulder seating, companion seats shall be shoulder-to-shoulder with the adjacent wheelchair space. [**ADA/ABA-AG:** 1002.4.7.1]

*Exception: Where shoulder-to-shoulder companion seating is not operationally or structurally feasible, compliance with this requirement shall be required to the maximum extent practicable. [**ADA/ABA-AG:** 1002.4.7.1, Exception]*

12.45.8.2.5 Amusement Ride Seats Designed for Transfer. Amusement ride seats designed for transfer shall comply with 12.45.8.2.5 when positioned for loading and unloading. [**ADA/ABA-AG:** 1002.5]

12.45.8.2.5.1 Clear Floor or Ground Space. A clear floor or ground space complying with ICC/ANSI A117.1, Section 305 shall be provided in the load and unload area adjacent to the amusement ride seats designed for transfer. [**ADA/ABA-AG:** 1002.5.1]

12.45.8.2.5.2 Transfer Height. The height of amusement ride seats designed for transfer shall be 14 in. (355 mm) minimum and 24 in. (610 mm) maximum measured from the surface of the load and unload area. [**ADA/ABA-AG:** 1002.5.2]

12.45.8.2.5.3 Transfer Entry. Where openings are provided for transfer to amusement ride seats, the openings shall provide clearance for transfer from a wheelchair or mobility aid to the amusement ride seat. [**ADA/ABA-AG:** 1002.5.3]

12.45.8.2.5.4 Wheelchair Storage Space. Wheelchair storage spaces complying with ICC/ANSI A117.1, Section 305 shall be provided in or adjacent to unload areas for each required amusement ride seat designed for transfer and shall not overlap any required means of egress or accessible route. [**ADA/ABA-AG:** 1002.5.4]

12.45.8.2.6 Transfer Devices for Use with Amusement Rides. Transfer devices for use with amusement rides shall comply with 12.45.8.2.6 when positioned for loading and unloading. [**ADA/ABA-AG:** 1002.6]

12.45.8.2.6.1 Clear Floor or Ground Space. A clear floor or ground space complying with ICC/ANSI A117.1, Section 305 shall be provided in the load and unload area adjacent to the transfer device. [**ADA/ABA-AG:** 1002.6.1]

12.45.8.2.6.2 Transfer Height. The height of transfer device seats shall be 14 in. (355 mm) minimum and 24 in. (610 mm) maximum measured from the load and unload surface. [**ADA/ABA-AG:** 1002.6.2]

12.45.8.2.6.3 Wheelchair Storage Space. Wheelchair storage spaces complying with ICC/ANSI A117.1, Section 305 shall be provided in or adjacent to unload areas for each required transfer device and shall not overlap any required means of egress or accessible route. [**ADA/ABA-AG:** 1002.6.3]

12.45.9 Recreational Boating Facilities. [**ADA/ABA-AG:** 1003]

12.45.9.1 General. Recreational boating facilities shall comply with 12.45.9.1. [**ADA/ABA-AG:** 1003.1]

12.45.9.2 Accessible Routes. Accessible routes serving recreational boating facilities, including gangways and floating piers, shall comply with ICC/ANSI A117.1, Chapter 4 except as modified by the exceptions in 12.45.9.2. [**ADA/ABA-AG:** 1003.2]

12.45.9.2.1 Boat Slips. Accessible routes serving boat slips shall be permitted to use the exceptions in 12.45.9.2.1. [**ADA/ABA-AG:** 1003.2.1]

Exception No. 1: Where an existing gangway or series of gangways is replaced or altered, an increase in the length of the gangway shall not

--`,,```,,,,````-`-`,,`,,`,`,,`---
Copyright National Fire Protection Association
Provided by IHS under license with NFPA
No reproduction or networking permitted without license from IHS
Not for Resale

*be required to comply with 12.45.9.2.1 unless required by 12.2.4. [**ADA/ABA-AG:** 1003.2.1, Exception 1]*

*Exception No. 2: Gangways shall not be required to comply with the maximum rise specified in ICC/ANSI A117.1, Section 405.6. [**ADA/ABA-AG:** 1003.2.1, Exception 2]*

*Exception No. 3: Where the total length of a gangway or series of gangways serving as part of a required accessible route is 80 ft (24 m) minimum, gangways shall not be required to comply with ICC/ANSI A117.1, Section 405.2. [**ADA/ABA-AG:** 1003.2.1, Exception 3]*

*Exception No. 4: Where facilities contain fewer than 25 boat slips and the total length of the gangway or series of gangways serving as part of a required accessible route is 30 ft (9.1 m) minimum, gangways shall not be required to comply with ICC/ANSI A117.1, Section 405.2. [**ADA/ABA-AG:** 1003.2.1, Exception 4]*

*Exception No. 5: Where gangways connect to transition plates, landings specified by ICC/ANSI A117.1, Section 405.7 shall not be required. [**ADA/ABA-AG:** 1003.2.1, Exception 5]*

*Exception No. 6: Where gangways and transition plates connect and are required to have handrails, handrail extensions shall not be required. Where handrail extensions are provided on gangways or transition plates, the handrail extensions shall not be required to be parallel with the ground or floor surface. [**ADA/ABA-AG:** 1003.2.1, Exception 6]*

*Exception No. 7: The cross slope specified in ICC/ANSI A117.1, Sections 403.3 and 405.3 for gangways, transition plates, and floating piers that are part of accessible routes shall be measured in the static position. [**ADA/ABA-AG:** 1003.2.1, Exception 7]*

*Exception No. 8: Changes in level complying with ICC/ANSI A117.1, Sections 303.3 and 303.4 shall be permitted on the surfaces of gangways and boat launch ramps. [**ADA/ABA-AG:** 1003.2.1, Exception 8]*

12.45.9.2.2 Boarding Piers at Boat Launch Ramps. Accessible routes serving boarding piers at boat launch ramps shall be permitted to use the exceptions in 12.45.9.2.2. [**ADA/ABA-AG:** 1003.2.2]

*Exception No. 1: Accessible routes serving floating boarding piers shall be permitted to use Exception No. 1, Exception No. 2, Exception No. 5, Exception No. 6, Exception No. 7, and Exception No. 8 in 12.45.9.2.1. [**ADA/ABA-AG:** 1003.2.2, Exception 1]*

*Exception No. 2: Where the total length of the gangway or series of gangways serving as part of a required accessible route is 30 ft (9.1 m) minimum, gangways shall not be required to comply with ICC/ANSI A117.1, Section 405.2. [**ADA/ABA-AG:** 1003.2.2, Exception 2]*

*Exception No. 3: Where the accessible route serving a floating boarding pier or skid pier is located within a boat launch ramp, the portion of the accessible route located within the boat launch ramp shall not be required to comply with ICC/ANSI A117.1, Section 405. [**ADA/ABA-AG:** 1003.2.2, Exception 3]*

12.45.9.3 Clearances. Clearances at boat slips and on boarding piers at boat launch ramps shall comply with 12.45.9.3. [**ADA/ABA-AG:** 1003.3]

12.45.9.3.1 Boat Slip Clearance. Boat slips shall provide clear pier space 60 in. (1525 mm) wide minimum and at least as long as the boat slips. Each 10 ft (3050 mm) maximum of linear pier edge serving boat slips shall contain at least one continuous clear opening 60 in. (1525 mm) wide minimum. *[See Figure 12.45.9.3.1(a).]* [**ADA/ABA-AG:** 1003.3.1]

*Exception No. 1: Clear pier space shall be permitted to be 36 in. (915 mm) wide minimum for a length of 24 in. (610 mm) maximum, provided that multiple 36 in. (915 mm) wide segments are separated by segments that are 60 in. (1525 mm) wide minimum and 60 in. (1525 mm) long minimum. [See Figure 12.45.9.3.1(b).] [**ADA/ABA-AG:** 1003.3.1, Exception 1]*

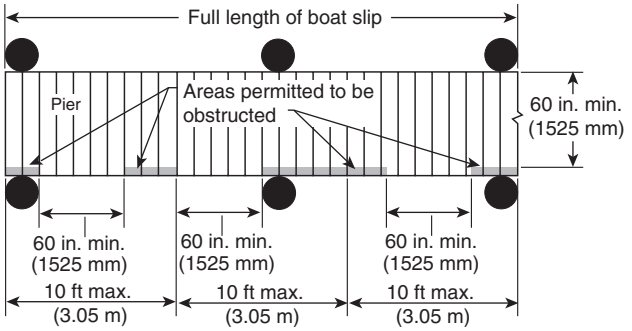

FIGURE 12.45.9.3.1(a) Boat Slip Clearance. [ADA/ABA-AG: Figure 1003.3.1]

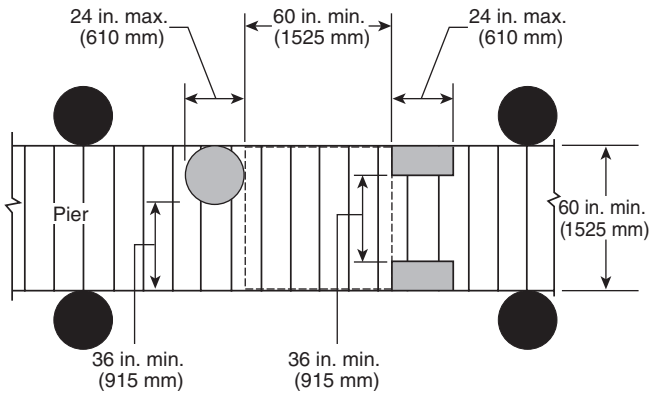

FIGURE 12.45.9.3.1(b) Clear Pier Space Reduction at Boat Slips. [ADA/ABA-AG: Figure 1003.3.1, Exception 1]

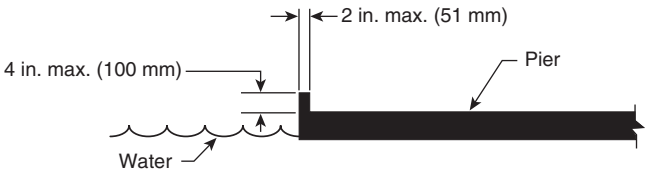

FIGURE 12.45.9.3.1(c) Edge Protection at Boat Slips. [ADA/ABA-AG: Figure 1003.3.1, Exception 2]

*Exception No. 2: Edge protection shall be permitted at the continuous clear openings, provided that it is 4 in. (100 mm) high maximum and 2 in. (51 mm) wide maximum. [See Figure 12.45.9.3.1(c).] [**ADA/ABA-AG:** 1003.3.1, Exception 2]*

*Exception No. 3: In existing piers, clear pier space shall be permitted to be located perpendicular to the boat slip and shall extend the width of the boat slip, where the facility has at least one boat slip complying with 12.45.9.3, and further compliance with 12.45.9.3 would result in a reduction in the number of boat slips available or result in a reduction of the widths of existing slips. [**ADA/ABA-AG:** 1003.3.1, Exception 3]*

Copyright National Fire Protection Association
Provided by IHS under license with NFPA
No reproduction or networking permitted without license from IHS
Not for Resale

12.45.9.3.2 Boarding Pier Clearances. Boarding piers at boat launch ramps shall provide clear pier space 60 in. (1525 mm) wide minimum and shall extend the full length of the boarding pier. Every 10 ft (3050 mm) maximum of linear pier edge shall contain at least one continuous clear opening 60 in. (1525 mm) wide minimum. *[See Figure 12.45.9.3.1(a).]* [**ADA/ABA-AG:** 1003.3.2]

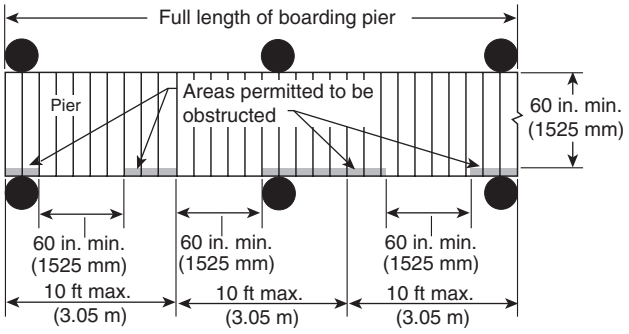

FIGURE 12.45.9.3.2(a) Boarding Pier Clearance. [ADA/ABA-AG: Figure 1003.3.2]

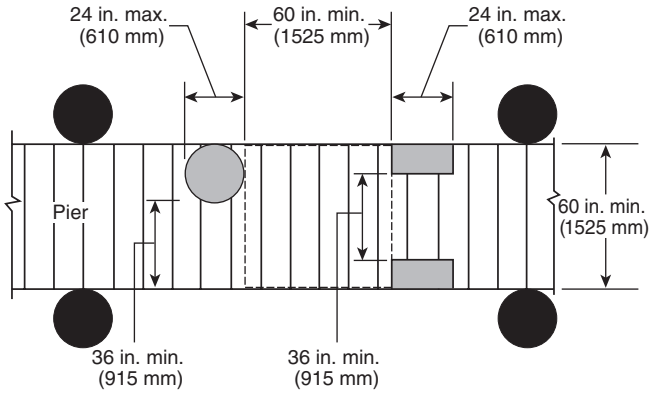

FIGURE 12.45.9.3.2(b) Clear Pier Space Reduction at Boarding Piers. [ADA/ABA-AG: Figure 1003.3.2, Exception 1]

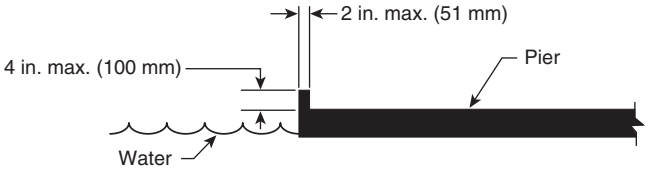

FIGURE 12.45.9.3.2(c) Edge Protection at Boarding Piers. [ADA/ABA-AG: Figure 1003.3.2, Exception 2]

*Exception No. 1: The clear pier space shall be permitted to be 36 in. (915 mm) wide minimum for a length of 24 in. (610 mm) maximum provided that multiple 36 in. (915 mm) wide segments are separated by segments that are 60 in. (1525 mm) wide minimum and 60 in. (1525 mm) long minimum. [See Figure 12.45.9.3.2(b).] [**ADA/ABA-AG:** 1003.3.2, Exception 1]*

*Exception No. 2: Edge protection shall be permitted at the continuous clear openings provided that it is 4 in. (100 mm) high maximum and 2 in. (51 mm) wide maximum. [See Figure 12.45.9.3.2(c).] [**ADA/ABA-AG:** 1003.3.2, Exception 2]*

12.45.10 Exercise Machines and Equipment. [**ADA/ABA-AG:** 1004] Exercise machines and equipment shall have a clear floor space complying with ICC/ANSI A117.1, Section 305 positioned for transfer or for use by an individual seated in a wheelchair. Clear floor or ground spaces required at exercise machines and equipment shall be permitted to overlap. [**ADA/ABA-AG:** 1004.1]

12.45.11 Fishing Piers and Platforms. [**ADA/ABA-AG:** 1005]

12.45.11.1 Accessible Routes. Accessible routes serving fishing piers and platforms, including gangways and floating piers, shall comply with ICC/ANSI A117.1, Chapter 4. [**ADA/ABA-AG:** 1005.1]

*Exception No. 1: Accessible routes serving floating fishing piers and platforms shall be permitted to use Exception No. 1, Exception No. 2, Exception No. 5, Exception No. 6, Exception No. 7, and Exception No. 8 in 12.45.9.2.1. [**ADA/ABA-AG:** 1005.1, Exception 1]*

*Exception No. 2: Where the total length of the gangway or series of gangways serving as part of a required accessible route is 30 ft (9.1 m) minimum, gangways shall not be required to comply with ICC/ANSI A117.1, Section 405.2. [**ADA/ABA-AG:** 1005.1, Exception 2]*

12.45.11.2 Railings. Where provided, railings, guards, or handrails shall comply with 12.45.11.2. [**ADA/ABA-AG:** 1005.2]

12.45.11.2.1 Height. At least 25 percent of the railings, guards, or handrails shall be 34 in. (865 mm) maximum above the ground or deck surface. [**ADA/ABA-AG:** 1005.2.1]

*Exception: Where a guard complying with 11.2.2.4.5 is provided, the guard shall not be required to comply with 12.45.11.2.1. [**ADA/ABA-AG:** 1005.2.1, Exception]*

12.45.11.2.2 Dispersion. Railings, guards, or handrails required to comply with 12.45.11.2.1 shall be dispersed throughout the fishing pier or platform. [**ADA/ABA-AG:** 1005.2.1.1]

12.45.11.3 Edge Protection. Where railings, guards, or handrails complying with 12.45.11.2 are provided, edge protection complying with 12.45.11.3.1 or 12.45.11.3.2 shall be provided. [**ADA/ABA-AG:** 1005.3]

12.45.11.3.1 Curb or Barrier. Curbs or barriers shall extend 2 in. (51 mm) minimum above the surface of the fishing pier or platform. [**ADA/ABA-AG:** 1005.3.1]

12.45.11.3.2 Extended Ground or Deck Surface. The ground or deck surface shall extend 12 in. (305 mm) minimum beyond the inside face of the railing. Toe clearance shall be provided and shall be 30 in. (760 mm) wide minimum and 9 in. (230 mm) minimum above the ground or deck surface beyond the railing [in accordance with Figure 12.45.11.3.2]. [**ADA/ABA-AG:** 1005.3.2]

12.45.11.4 Clear Floor or Ground Space. At each location where there are railings, guards, or handrails complying with 12.45.11.2.1, a clear floor or ground space complying with ICC/ANSI A117.1, Section 305 shall be provided. Where there are no railings, guards, or handrails, at least one clear floor or ground space complying with ICC/ANSI A117.1, Section 305 shall be provided on the fishing pier or platform. [**ADA/ABA-AG:** 1005.4]

--`,,```,,,,````-`-`,,`,,`,`,,`---
Copyright National Fire Protection Association
Provided by IHS under license with NFPA
No reproduction or networking permitted without license from IHS
Not for Resale

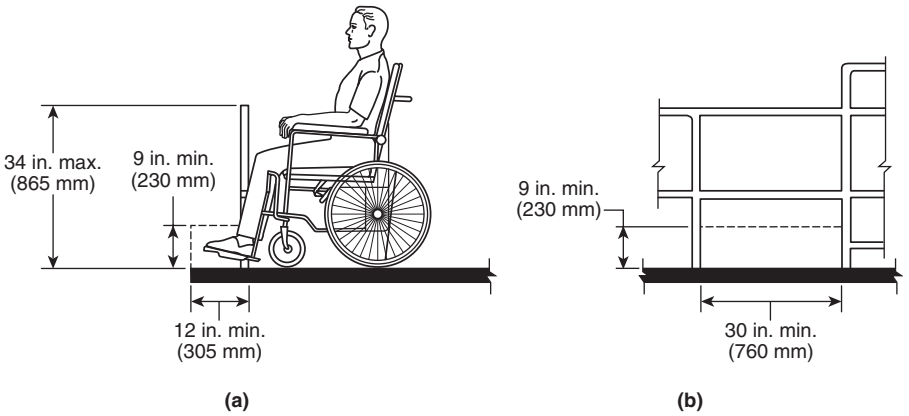

FIGURE 12.45.11.3.2 Extended Ground or Deck Surface at Fishing Piers and Platforms. [ADA/ABA-AG: Figure 1005.3.2]

12.45.11.5 Turning Space. At least one turning space complying with ICC/ANSI A117.1, Section 304.3 shall be provided on fishing piers and platforms. [**ADA/ABA-AG:** 1005.5]

12.45.12 Golf Facilities. [**ADA/ABA-AG:** 1006]

12.45.12.1 General. Golf facilities shall comply with 12.45.12. [**ADA/ABA-AG:** 1006.1]

12.45.12.2 Accessible Routes. Accessible routes serving teeing grounds, practice teeing grounds, putting greens, practice putting greens, teeing stations at driving ranges, course weather shelters, golf car rental areas, bag drop areas, and course toilet rooms shall comply with ICC/ANSI A117.1, Chapter 4 and shall be 48 in. (1220 mm) wide minimum. Where handrails are provided, accessible routes shall be 60 in. (1525 mm) wide minimum. [**ADA/ABA-AG:** 1006.2]

*Exception: Handrails shall not be required on golf courses. Where handrails are provided on golf courses, the handrails shall not be required to comply with ICC/ANSI A117.1, Section 505. [**ADA/ABA-AG:** 1006.2, Exception]*

12.45.12.3 Golf Car Passages. Golf car passages shall comply with 12.45.12.3. [**ADA/ABA-AG:** 1006.3]

12.45.12.3.1 Clear Width. The clear width of golf car passages shall be 48 in. (1220 mm) minimum. [**ADA/ABA-AG:** 1006.3.1]

12.45.12.3.2 Barriers. Where curbs or other constructed barriers prevent golf cars from entering a fairway, openings 60 in. (1525 mm) wide minimum shall be provided at intervals not to exceed 225 ft (69 m). [**ADA/ABA-AG:** 1006.3.2]

12.45.12.4 Weather Shelters. A clear floor or ground space 60 in. (1525 mm) minimum by 8 ft (2440 mm) minimum shall be provided within weather shelters. [**ADA/ABA-AG:** 1006.4]

12.45.13 Miniature Golf Facilities. [**ADA/ABA-AG:** 1007]

12.45.13.1 General. Miniature golf facilities shall comply with 12.45.13. [**ADA/ABA-AG:** 1007.1]

12.45.13.2 Accessible Routes. Accessible routes serving holes on miniature golf courses shall comply with ICC/ANSI A117.1, Chapter 4. Accessible routes located on playing surfaces of miniature golf holes shall be permitted to use the exceptions in 12.45.13.2. [**ADA/ABA-AG:** 1007.2)]

*Exception No. 1: Playing surfaces shall not be required to comply with ICC/ANSI A117.1, Section 302.2. [**ADA/ABA-AG:** 1007.2, Exception 1]*

*Exception No. 2: Where accessible routes intersect playing surfaces of holes, a 1 in. (25 mm) maximum curb shall be permitted for a width of 32 in. (815 mm) minimum. [**ADA/ABA-AG:** 1007.2, Exception 2]*

*Exception No. 3: A slope not steeper than 1:4 for a 4 in. (100 mm) maximum rise shall be permitted. [**ADA/ABA-AG:** 1007.2, Exception 3]*

*Exception No. 4: Ramp landing slopes specified by ICC/ANSI A117.1, Section 405.7.1 shall be permitted to be 1:20 maximum. [**ADA/ABA-AG:** 1007.2, Exception 4]*

*Exception No. 5: Ramp landing length specified by ICC/ANSI A117.1, Section 405.7.3 shall be permitted to be 48 in. (1220 mm) long minimum. [**ADA/ABA-AG:** 1007.2, Exception 5]*

*Exception No. 6: Ramp landing size specified by ICC/ANSI A117.1, Section 405.7.4 shall be permitted to be 48 in. (1220 mm) minimum by 60 in. (1525 mm) minimum. [**ADA/ABA-AG:** 1007.2, Exception 6]*

*Exception No. 7: Handrails shall not be required on holes. Where handrails are provided on holes, the handrails shall not be required to comply with ICC/ANSI A117.1, Section 505. [**ADA/ABA-AG:** 1007.2, Exception 7]*

12.45.13.3 Miniature Golf Holes. Miniature golf holes shall comply with 12.45.13.3. [**ADA/ABA-AG:** 1007.3]

12.45.13.3.1 Start of Play. A clear floor or ground space 48 in. (1220 mm) minimum by 60 in. (1525 mm) minimum with slopes not steeper than 1:48 shall be provided at the start of play. [**ADA/ABA-AG:** 1007.3.1]

12.45.13.3.2 Golf Club Reach Range Area. All areas within holes where golf balls rest shall be within 36 in. (915 mm) maximum of a clear floor or ground space 36 in. (915 mm) wide minimum and 48 in. (1220 mm) long minimum having a running slope not steeper than 1:20. The clear floor or ground space shall be served by an accessible route [in accordance with Figure 12.45.13.3.2.] [**ADA/ABA-AG:** 1007.3.2]

12.45.14 Play Areas. [**ADA/ABA-AG:** 1008]

12.45.14.1 General. Play areas shall comply with 12.45.14. [**ADA/ABA-AG:** 1008.1]

Copyright National Fire Protection Association
Provided by IHS under license with NFPA
No reproduction or networking permitted without license from IHS
Not for Resale

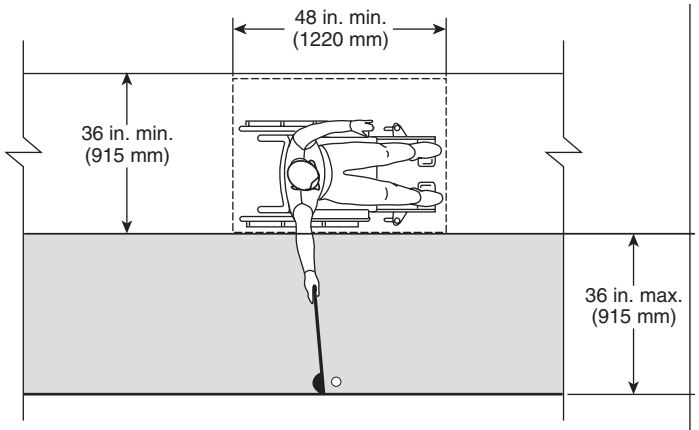

FIGURE 12.45.13.3.2 Golf Club Reach Range Area. [ADA/ABA-AG: Figure 1007.3.2]

12.45.14.2 Accessible Routes. Accessible routes serving play areas shall comply with ICC/ANSI, Chapter 4 and 12.45.14.2 and shall be permitted to use the exceptions in 12.45.14.2.1 through 12.45.14.2.3. Where accessible routes serve ground level play components, the vertical clearance shall be 6 ft 8 in. high (2030 mm) minimum. [**ADA/ABA-AG:** 1008.2]

12.45.14.2.1 Ground Level and Elevated Play Components. Accessible routes serving ground level play components and elevated play components shall be permitted to use the exceptions in 12.45.14.2.1. [**ADA/ABA-AG:** 1008.2.1]

*Exception No. 1: Transfer systems complying with 12.45.14.3 shall be permitted to connect elevated play components except where 20 or more elevated play components are provided no more than 25 percent of the elevated play components shall be permitted to be connected by transfer systems. [**ADA/ABA-AG:** 1008.2.1, Exception 1]*

*Exception No. 2: Where transfer systems are provided, an elevated play component shall be permitted to connect to another elevated play component as part of an accessible route. [**ADA/ABA-AG:** 1008.2.1, Exception 2]*

12.45.14.2.2 Soft Contained Play Structures. Accessible routes serving soft contained play structures shall be permitted to use the exception in 12.45.14.2.2. [**ADA/ABA-AG:** 1008.2.2]

*Exception: Transfer systems complying with 12.45.14.3 shall be permitted to be used as part of an accessible route. [**ADA/ABA-AG:** 1008.2.2, Exception]*

12.45.14.2.3 Water Play Components. Accessible routes serving water play components shall be permitted to use the exceptions in 12.45.14.2.3. [**ADA/ABA-AG:** 1008.2.3]

*Exception No. 1: Where the surface of the accessible route, clear floor or ground spaces, or turning spaces serving water play components is submerged, compliance with ICC/ANSI A117.1, Sections 302, 403.3, 405.2, 405.3, and 1008.2.6 shall not be required. [**ADA/ABA-AG:** 1008.2.3, Exception 1]*

*Exception No. 2: Transfer systems complying with 12.45.14.3 shall be permitted to connect elevated play components in water. [**ADA/ABA-AG:** 1008.2.3, Exception 2]*

12.45.14.2.4 Clear Width. Accessible routes connecting play components shall provide a clear width complying with 12.45.14.2.4. [**ADA/ABA-AG:** 1008.2.4]

12.45.14.2.4.1 Ground Level. At ground level, the clear width of accessible routes shall be 60 in. (1525 mm) minimum. [**ADA/ABA-AG:** 1008.2.4.1]

*Exception No. 1: In play areas less than 1000 ft^2 (93 m^2), the clear width of accessible routes shall be permitted to be 44 in. (1120 mm) minimum, if at least one turning space complying with ICC/ANSI A117.1, Section 304.3 is provided where the restricted accessible route exceeds 30 ft (9.1 m) in length. [**ADA/ABA-AG:** 1008.2.4.1, Exception 1]*

*Exception No. 2: The clear width of accessible routes shall be permitted to be 36 in. (915 mm) minimum for a distance of 60 in. (1525 mm) maximum provided that multiple reduced width segments are separated by segments that are 60 in. (1525 mm) wide minimum and 60 in. (1525 mm) long minimum. [**ADA/ABA-AG:** 1008.2.4.1, Exception 2]*

12.45.14.2.4.2 Elevated. The clear width of accessible routes connecting elevated play components shall be 36 in. (915 mm) minimum. [**ADA/ABA-AG:** 1008.2.4.2]

*Exception No. 1: The clear width of accessible routes connecting elevated play components shall be permitted to be reduced to 32 in. (815 mm) minimum for a distance of 24 in. (610 mm) maximum provided that reduced width segments are separated by segments that are 48 in. (1220 mm) long minimum and 36 in. (915 mm) wide minimum. [**ADA/ABA-AG:** 1008.2.4.2, Exception 1]*

*Exception No. 2: The clear width of transfer systems connecting elevated play components shall be permitted to be 24 in. (610 mm) minimum. [**ADA/ABA-AG:** 1008.2.4.2, Exception 2]*

12.45.14.2.5 Ramps. Within play areas, ramps connecting ground level play components and ramps connecting elevated play components shall comply with 12.45.14.2.5. [**ADA/ABA-AG:** 1008.2.5]

12.45.14.2.5.1 Ground Level. Ramp runs connecting ground level play components shall have a running slope not steeper than 1:16. [**ADA/ABA-AG:** 1008.2.5.1]

12.45.14.2.5.2 Elevated. The rise for any ramp run connecting elevated play components shall be 12 in. (305 mm) maximum. [**ADA/ABA-AG:** 1008.2.5.2]

Copyright National Fire Protection Association
Provided by IHS under license with NFPA
No reproduction or networking permitted without license from IHS
Not for Resale

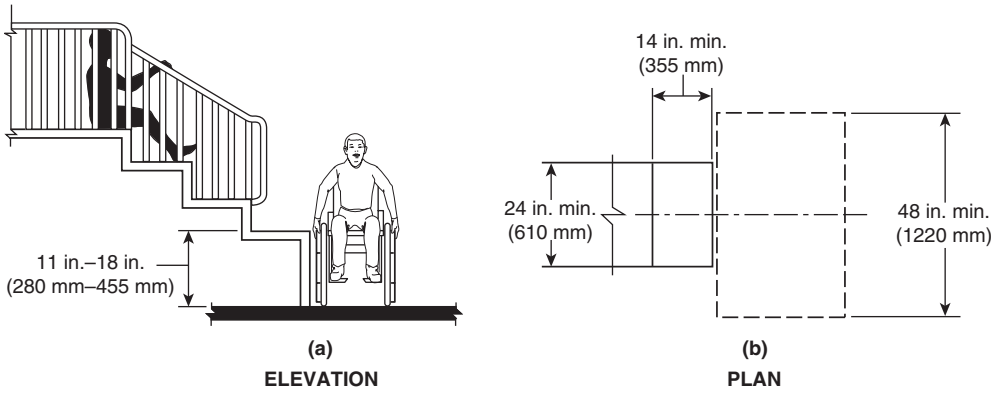

FIGURE 12.45.14.3.1 Transfer Platforms. [ADA/ABA-AG: Figure 1008.3.1]

12.45.14.2.5.3 Handrails. Where required on ramps serving play components, the handrails shall comply with ICC/ANSI A117.1, Section 505 except as modified by 12.45.14.2.5.3. [**ADA/ABA-AG:** 1008.2.5.3]

*Exception No. 1: Handrails shall not be required on ramps located within ground level use zones. [**ADA/ABA-AG:** 1008.2.5.3, Exception 1]*

*Exception No. 2: Handrail extensions shall not be required. [**ADA/ABA-AG:** 1008.2.5.3, Exception 2]*

(A) Handrail Gripping Surfaces. Handrail gripping surfaces with a circular cross section shall have an outside diameter of 0.95 in. (24 mm) minimum and 1.55 in. (39 mm) maximum. Where the shape of the gripping surface is non-circular, the handrail shall provide an equivalent gripping surface. [**ADA/ABA-AG:** 1008.2.5.3.1]

(B) Handrail Height. The top of handrail gripping surfaces shall be 20 in. (510 mm) minimum and 28 in. (710 mm) maximum above the ramp surface. [**ADA/ABA-AG:** 1008.2.5.3.2]

12.45.14.2.6 Ground Surfaces. Ground surfaces on accessible routes, clear floor or ground spaces, and turning spaces shall comply with 12.45.14.2.6. [**ADA/ABA-AG:** 1008.2.6]

12.45.14.2.6.1 Accessibility. Ground surfaces shall comply with ASTM F 1951. Ground surfaces shall be inspected and maintained regularly and frequently to ensure continued compliance with ASTM F 1951. [**ADA/ABA-AG:** 1008.2.6.1]

12.45.14.2.6.2 Use Zones. Ground surfaces located within use zones shall comply with ASTM F 1292. [**ADA/ABA-AG:** 1008.2.6.2]

12.45.14.3 Transfer Systems. Where transfer systems are provided to connect to elevated play components, transfer systems shall comply with 12.45.14.3. [**ADA/ABA-AG:** 1008.3]

12.45.14.3.1 Transfer Platforms. Transfer platforms shall be provided where transfer is intended from wheelchairs or other mobility aids. Transfer platforms shall comply with 12.45.14.3.1 [as shown in Figure 12.45.14.3.1]. [**ADA/ABA-AG:** 1008.3.1]

12.45.14.3.1.1 Size. Transfer platforms shall have level surfaces 14 in. (355 mm) deep minimum and 24 in. (610 mm) wide minimum. [**ADA/ABA-AG:** 1008.3.1.1]

12.45.14.3.1.2 Height. The height of transfer platforms shall be 11 in. (280 mm) minimum and 18 in. (455 mm) maximum measured to the top of the surface from the ground or floor surface. [**ADA/ABA-AG:** 1008.3.1.2]

12.45.14.3.1.3 Transfer Space. A transfer space complying with ICC/ANSI A117.1, Sections 305.2 and 305.3 shall be provided adjacent to the transfer platform. The 48 in. (1220 mm) long minimum dimension of the transfer space shall be centered on and parallel to the 24 in. (610 mm) long minimum side of the transfer platform. The side of the transfer platform serving the transfer space shall be unobstructed. [**ADA/ABA-AG:** 1008.3.1.3]

12.45.14.3.1.4 Transfer Supports. At least one means of support for transferring shall be provided. [**ADA/ABA-AG:** 1008.3.1.4]

12.45.14.3.2 Transfer Steps. Transfer steps shall be provided where movement is intended from transfer platforms to levels with elevated play components required to be on accessible routes. Transfer steps shall comply with 12.45.14.3.2 [in accordance with Figure 12.45.14.3.2]. [**ADA/ABA-AG:** 1008.3.2]

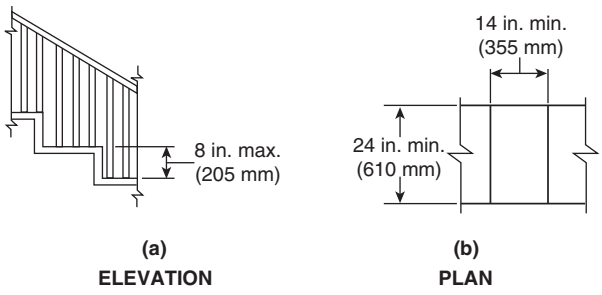

FIGURE 12.45.14.3.2 Transfer Steps. [ADA/ABA-AG: Figure 1008.3.2]

12.45.14.3.2.1 Size. Transfer steps shall have level surfaces 14 in. (355 mm) deep minimum and 24 in. (610 mm) wide minimum. [**ADA/ABA-AG:** 1008.3.2.1]

12.45.14.3.2.2 Height. Each transfer step shall be 8 in. (205 mm) high maximum. [**ADA/ABA-AG:** 1008.3.2.2]

12.45.14.3.3 Transfer Supports. At least one means of support for transferring shall be provided. [**ADA/ABA-AG:** 1008.3.2.3]

Copyright National Fire Protection Association
Provided by IHS under license with NFPA
No reproduction or networking permitted without license from IHS
Not for Resale

12.45.14.4 Play Components. Ground level play components on accessible routes and elevated play components connected by ramps shall comply with 12.45.14.4. [**ADA/ABA-AG:** 1008.4]

12.45.14.4.1 Turning Space. At least one turning space complying with ICC/ANSI A117.1, Section 304 shall be provided on the same level as play components. Where swings are provided, the turning space shall be located immediately adjacent to the swing. [**ADA/ABA-AG:** 1008.4.1]

12.45.14.4.2 Clear Floor or Ground Space. Clear floor or ground space complying with ICC/ANSI A117.1, Sections 305.2 and 305.3 shall be provided at play components. [**ADA/ABA-AG:** 1008.4.2]

12.45.14.4.3 Play Tables. Where play tables are provided, knee clearance 24 in. (610 mm) high minimum, 17 in. deep (430 mm) minimum, and 30 in. (760 mm) wide minimum shall be provided. The tops of rims, curbs, or other obstructions shall be 31 in. (785 mm) high maximum. [**ADA/ABA-AG:** 1008.4.3]

*Exception: Play tables designed and constructed primarily for children 5 years and younger shall not be required to provide knee clearance where the clear floor or ground space required by 12.45.14.4.2 is arranged for a parallel approach. [**ADA/ABA-AG:** 1008.4.3, Exception]*

12.45.14.4.4 Entry Points and Seats. Where play components require transfer to entry points or seats, the entry points or seats shall be 11 in. (280 mm) minimum and 24 in. (610 mm) maximum from the clear floor or ground space. [**ADA/ABA-AG:** 1008.4.4]

*Exception: Entry points of slides shall not be required to comply with 12.45.14.4.4. [**ADA/ABA-AG:** 1008.4.4, Exception]*

12.45.14.4.5 Transfer Supports. Where play components require transfer to entry points or seats, at least one means of support for transferring shall be provided. [**ADA/ABA-AG:** 1008.4.5]

12.45.15 Swimming Pools, Wading Pools, and Spas. [**ADA/ABA-AG:** 1009]

12.45.15.1 General. Where provided, pool lifts, sloped entries, transfer walls, transfer systems, and pool stairs shall comply with 12.45.15. [**ADA/ABA-AG:** 1009.1]

12.45.15.2 Pool Lifts. Pool lifts shall comply with 12.45.15.2 [in accordance with Figure 12.45.15.2]. [**ADA/ABA-AG:** 1009.2]

12.45.15.2.1 Pool Lift Location. Pool lifts shall be located where the water level does not exceed 48 in. (1220 mm). [**ADA/ABA-AG:** 1009.2.1]

*Exception No. 1: Where the entire pool depth is greater than 48 in. (1220 mm), compliance with 12.45.15.2.1 shall not be required. [**ADA/ABA-AG:** 1009.2.1, Exception 1]*

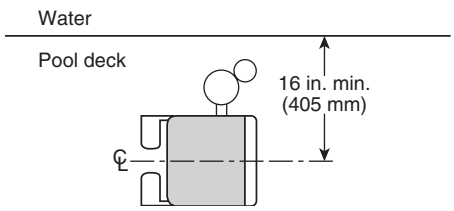

FIGURE 12.45.15.2 Pool Lift Seat Location. [ADA/ABA-AG: Figure 1009.2.2]

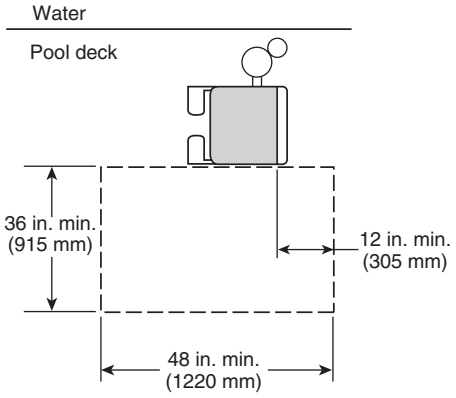

FIGURE 12.45.15.2.3 Clear Deck Space at Pool Lifts. [ADA/ABA-AG: Figure 1009.2.3]

*Exception No. 2: Where multiple pool lift locations are provided, no more than one pool lift shall be required to be located in an area where the water level is 48 in. (1220 mm) maximum. [**ADA/ABA-AG:** 1009.2.1, Exception 2]*

12.45.15.2.2 Seat Location. In the raised position, the centerline of the seat shall be located over the deck and 16 in. (405 mm) minimum from the edge of the pool. The deck surface between the centerline of the seat and the pool edge shall have a slope not steeper than 1:48. [**ADA/ABA-AG:** 1009.2.2]

12.45.15.2.3 Clear Deck Space. On the side of the seat opposite the water, a clear deck space shall be provided parallel with the seat. The space shall be 36 in. (915 mm) wide minimum and shall extend forward 48 in. (1220 mm) minimum from a line located 12 in. (305 mm) behind the rear edge of the seat. The clear deck space shall have a slope not steeper than 1:48. *[See Figure 12.45.15.2.3.]* [**ADA/ABA-AG:** 1009.2.3]

12.45.15.2.4 Seat Height. The height of the lift seat shall be designed to allow a stop at 16 in. (405 mm) minimum to 19 in. (485 mm) maximum measured from the deck to the top of the seat surface when in the raised (load) position. *[See Figure 12.45.15.2.4.]* [**ADA/ABA-AG:** 1009.2.4)]

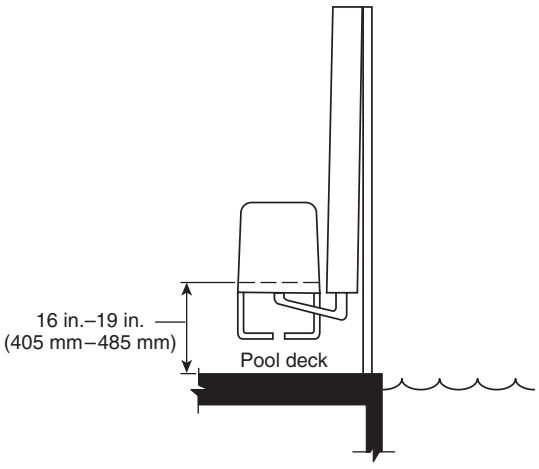

FIGURE 12.45.15.2.4 Pool Lift Seat Height. [ADA/ABA-AG: Figure 1009.2.4]

Copyright National Fire Protection Association
Provided by IHS under license with NFPA
No reproduction or networking permitted without license from IHS
Not for Resale

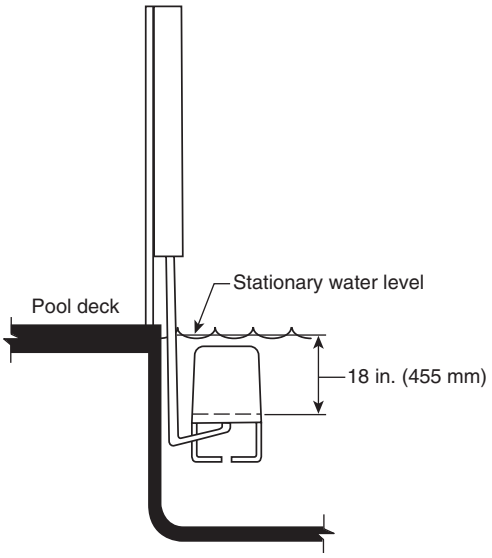

FIGURE 12.45.15.2.8 Pool Lift Submerged Depth. [ADA/ABA-AG: Figure 1009.2.8]

12.45.15.2.5 Seat Width. The seat shall be 16 in. (405 mm) wide minimum. [**ADA/ABA-AG:** 1009.2.5]

12.45.15.2.6 Footrests and Armrests. Footrests shall be provided and shall move with the seat. If provided, the armrest positioned opposite the water shall be removable or shall fold clear of the seat when the seat is in the raised (load) position. [**ADA/ABA-AG:** 1009.2.6]

*Exception: Footrests shall not be required on pool lifts provided in spas. [**ADA/ABA-AG:** 1009.2.6, Exception]*

12.45.15.2.7 Operation. The lift shall be capable of unassisted operation from both the deck and water levels. Controls and operating mechanisms shall be unobstructed when the lift is in use and shall comply with ICC/ANSI A117.1, Section 309.4. [**ADA/ABA-AG:** 1009.2.7, Exception]

12.45.15.2.8 Submerged Depth. The lift shall be designed so that the seat will submerge to a water depth of 18 in. (455 mm) minimum below the stationary water level. *[See Figure 12.45.15.2.8.]* [**ADA/ABA-AG:** 1009.2.8]

12.45.15.2.9 Lifting Capacity. Single person pool lifts shall have a weight capacity of 300 lb (136 kg) minimum and be capable of sustaining a static load of at least 1½ times the rated load. [**ADA/ABA-AG:** 1009.2.9]

12.45.15.3 Sloped Entries. Sloped entries shall comply with 12.45.15.3 [in accordance with Figure 12.45.15.3.]. [**ADA/ABA-AG:** 1009.3]

12.45.15.3.1 Sloped Entries. Sloped entries shall comply with ICC/ANSI A117.1, Chapter 4 except as modified in 12.45.15.3.1 through 12.45.15.3.3. [**ADA/ABA-AG:** 1009.3.1]

*Exception: Where sloped entries are provided, the surfaces shall not be required to be slip resistant. [**ADA/ABA-AG:** 1009.3.1, Exception]*

12.45.15.3.2 Submerged Depth. Sloped entries shall extend to a depth of 24 in. (610 mm) minimum and 30 in. (760 mm) maximum below the stationary water level. Where landings are required by ICC/ANSI A117.1, Section 405.7, at least one landing shall be located 24 in. (610 mm) minimum and 30 in. (760 mm) maximum below the stationary water level. [**ADA/ABA-AG:** 1009.3.2]

*Exception: In wading pools, the sloped entry and landings, if provided, shall extend to the deepest part of the wading pool. [**ADA/ABA-AG:** 1009.3.2, Exception]*

12.45.15.3.3 Handrails. At least two handrails complying with ICC/ANSI A117.1, Section 505 shall be provided on the sloped entry. The clear width between required handrails shall be 33 in. (840 mm) minimum and 38 in. (965 mm) maximum [in accordance with Figure 12.45.15.3.3]. [**ADA/ABA-AG:** 1009.3.3]

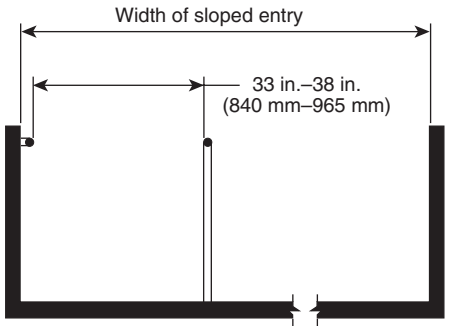

FIGURE 12.45.15.3.3 Handrails for Sloped Entry. [ADA/ABA-AG: Figure 1009.3.3]

*Exception No. 1: Handrail extensions specified by ICC/ANSI A117.1, Section 505.10.1 shall not be required at the bottom landing serving a sloped entry. [**ADA/ABA-AG:** 1009.3.3, Exception 1]*

Exception No. 2: Where a sloped entry is provided for wave action pools, leisure rivers, sand bottom pools, and other pools where user

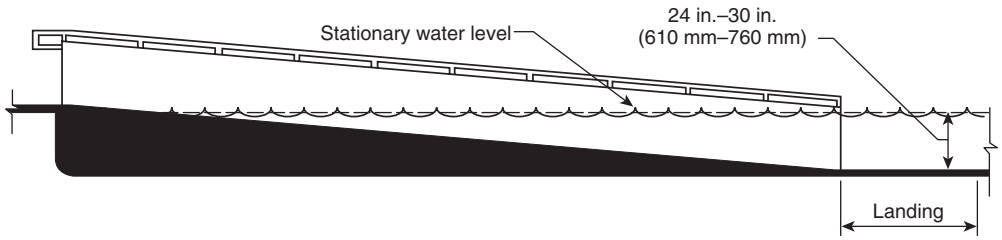

FIGURE 12.45.15.3 Sloped Entry Submerged Depth. [ADA/ABA-AG: Figure 1009.3.2]

Copyright National Fire Protection Association
Provided by IHS under license with NFPA
No reproduction or networking permitted without license from IHS
Not for Resale

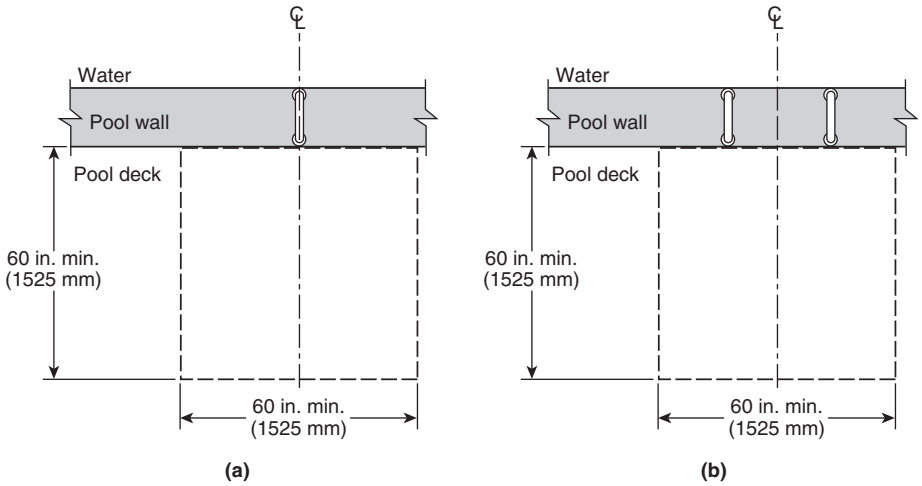

FIGURE 12.45.15.4.1 Clear Deck Space at Transfer Walls. [ADA/ABA-AG: Figure 1009.4.1]

*access is limited to one area, the handrails shall not be required to comply with the clear width requirements of 12.45.15.3.3. [**ADA/ABA-AG:** 1009.3.3, Exception 2]*

*Exception No. 3: Sloped entries in wading pools shall not be required to provide handrails complying with 12.45.15.3.3. If provided, handrails on sloped entries in wading pools shall not be required to comply with ICC/ANSI A117.1, Section 505. [**ADA/ABA-AG:** 1009.3.3, Exception 3]*

12.45.15.4 Transfer Walls. Transfer walls shall comply with 12.45.15.4. [**ADA/ABA-AG:** 1009.4]

12.45.15.4.1 Clear Deck Space. A clear deck space of 60 in. (1525 mm) minimum by 60 in. (1525 mm) minimum with a slope not steeper than 1:48 shall be provided at the base of the transfer wall. Where one grab bar is provided, the clear deck space shall be centered on the grab bar. Where two grab bars are provided, the clear deck space shall be centered on the clearance between the grab bars [in accordance with Figure 12.45.15.4.1]. [**ADA/ABA-AG:** 1009.4.1]

12.45.15.4.2 Height. The height of the transfer wall shall be 16 in. (405 mm) minimum and 19 in. (485 mm) maximum measured from the deck [in accordance with Figure 12.45.15.4.2]. [**ADA/ABA-AG:** 1009.4.2]

12.45.15.4.3 Wall Depth and Length. The depth of the transfer wall shall be 12 in. (305 mm) minimum and 16 in. (405 mm) maximum. The length of the transfer wall shall be 60 in. (1525 mm) minimum and shall be centered on the clear deck space [in accordance with Figure 12.45.15.4.3]. [**ADA/ABA-AG:** 1009.4.3]

12.45.15.4.4 Surface. Surfaces of transfer walls shall not be sharp and shall have rounded edges. [**ADA/ABA-AG:** 1009.4.4]

12.45.15.4.5 Grab Bars. At least one grab bar complying with ICC/ANSI A117.1, Section 609 shall be provided on the transfer wall. Grab bars shall be perpendicular to the pool wall and shall extend the full depth of the transfer wall. The top of the gripping surface shall be 4 in. (100 mm) minimum and 6 in. (150 mm) maximum above transfer walls. Where one grab bar is provided, clearance shall be 24 in. (610 mm) minimum on both sides of the grab bar. Where two grab bars are provided, clearance between grab bars shall be 24 in. (610 mm) minimum [in accordance with Figure 12.45.15.4.5]. [**ADA/ABA-AG:** 1009.4.5]

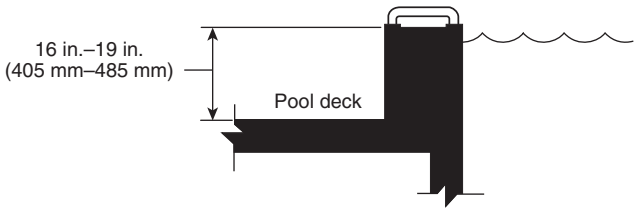

FIGURE 12.45.15.4.2 Transfer Wall Height. [ADA/ABA-AG: Figure 1009.4.2]

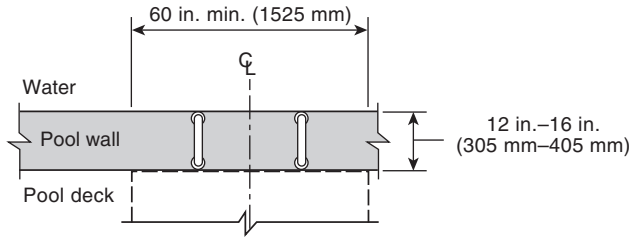

FIGURE 12.45.15.4.3 Depth and Length of Transfer Walls. [ADA/ABA-AG: Figure 1009.4.3]

*Exception: Grab bars on transfer walls shall not be required to comply with ICC/ANSI A117.1, Section 609.4. [**ADA/ABA-AG:** 1009.4.5, Exception]*

12.45.15.5 Transfer Systems. Transfer systems shall comply with 12.45.15.5. [**ADA/ABA-AG:** 1009.5]

12.45.15.5.1 Transfer Platform. A transfer platform shall be provided at the head of each transfer system. Transfer platforms shall provide 19 in. (485 mm) minimum clear depth and 24 in. (610 mm) minimum clear width. *[See Figure 12.45.15.5.1.]* [**ADA/ABA-AG:** 1009.5.1]

Copyright National Fire Protection Association
Provided by IHS under license with NFPA
No reproduction or networking permitted without license from IHS
Not for Resale

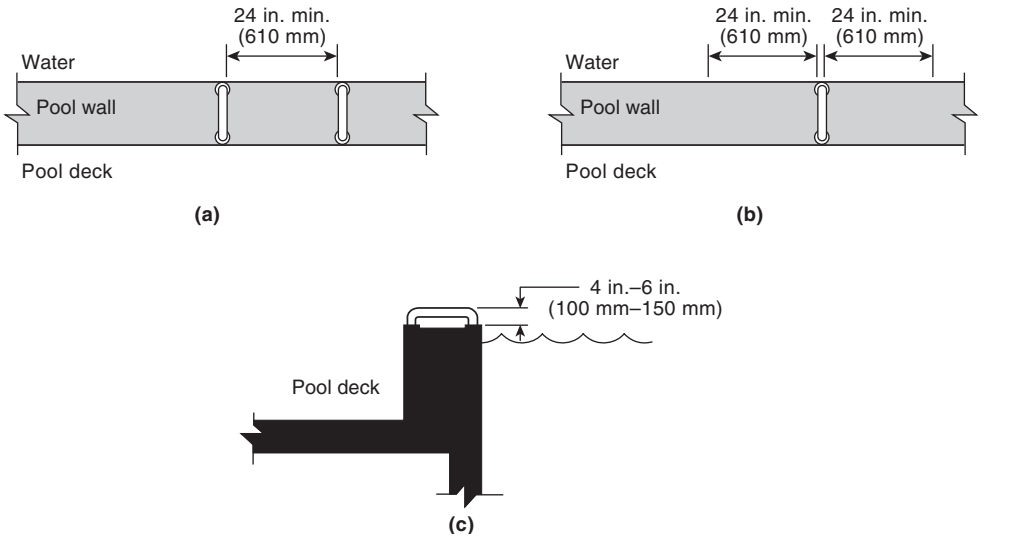

FIGURE 12.45.15.4.5 Grab Bars for Transfer Walls. [ADA/ABA-AG: Figure 1009.4.5]

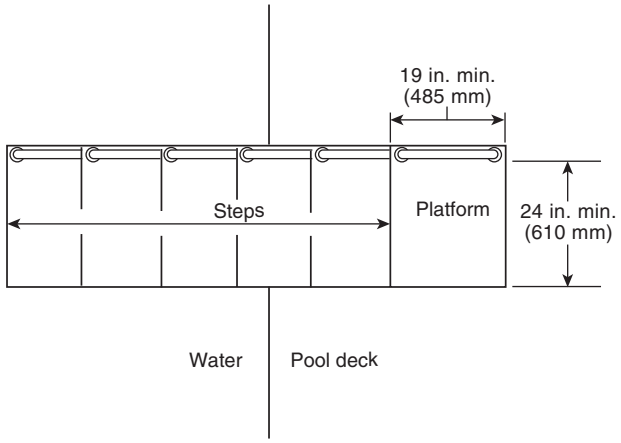

FIGURE 12.45.15.5.1 Size of Transfer Platform. [ADA/ABA-AG: Figure 1009.5.1]

12.45.15.5.2 Transfer Space. A transfer space of 60 in. (1525 mm) minimum by 60 in. (1525 mm) minimum with a slope not steeper than 1:48 shall be provided at the base of the transfer platform surface and shall be centered along a 24 in. (610 mm) minimum side of the transfer platform. The side of the transfer platform serving the transfer space shall be unobstructed [in accordance with Figure 12.45.15.5.2]. [**ADA/ABA-AG:** 1009.5.2]

12.45.15.5.3 Height. The height of the transfer platform shall comply with 12.45.15.4.2. [**ADA/ABA-AG:** 1009.5.3]

12.45.15.5.4 Transfer Steps. Transfer step height shall be 8 in. (205 mm) maximum. The surface of the bottom tread shall extend to a water depth of 18 in. (455 mm) minimum below the stationary water level. *[See Figure 12.45.15.5.4.]* [**ADA/ABA-AG:** 1009.5.4]

12.45.15.5.5 Surface. The surface of the transfer system shall not be sharp and shall have rounded edges. [**ADA/ABA-AG:** 1009.5.5]

12.45.15.5.6 Size. Each transfer step shall have a tread clear depth of 14 in. (355 mm) minimum and 17 in. (430 mm) maximum and shall have a tread clear width of 24 in. (610 mm) minimum. *[See Figure 12.45.15.5.6.].* [**ADA/ABA-AG:** 1009.5.6]

12.45.15.5.7 Grab Bars. At least one grab bar on each transfer step and the transfer platform or a continuous grab bar serving each transfer step and the transfer platform shall be provided. Where a grab bar is provided on each step, the tops of gripping surfaces shall be 4 in. (100 mm) minimum and 6 in. (150 mm) maximum above each step and transfer platform. Where a continuous grab bar is provided, the top of the gripping surface shall be 4 in. (100 mm) minimum and 6 in. (150 mm) maximum above the step nosing and transfer platform. Grab bars shall comply with ICC/ANSI A117.1, Section 609 and be located on at least one side of the transfer system. The grab bar located at the transfer platform shall not obstruct transfer [in accordance with Figure 12.45.15.5.7. [**ADA/ABA-AG:** 1009.5.7]

*Exception: Grab bars on transfer systems shall not be required to comply with ICC/ANSI A117.1, Section 609.4. [**ADA/ABA-AG:** 1009.5.7, Exception]*

12.45.15.6 Pool Stairs. Pool stairs shall comply with 12.45.15.6. [**ADA/ABA-AG:** 1009.6]

12.45.15.6.1 Pool Stairs. Pool stairs shall comply with ICC/ANSI A117.1, Section 504. [**ADA/ABA-AG:** 1009.6.1]

*Exception: Pool step riser heights shall not be required to be 4 in. (100 mm) high minimum and 7 in. (180 mm) high maximum provided that riser heights are uniform. [**ADA/ABA-AG:** 1009.6.1, Exception]*

12.45.15.6.2 Handrails. The width between handrails shall be 20 in. (510 mm) minimum and 24 in. (610 mm) maximum. Handrail extensions required by ICC/ANSI A117.1, Section 505.10.3 shall not be required on pool stairs. [**ADA/ABA-AG:** 1009.6.2]

12.45.16 Shooting Facilities with Firing Positions. [**ADA/ABA-AG:** 1010]

12.45.16.1 Turning Space. A circular turning space 60 in. (1525 mm) diameter minimum with slopes not steeper than 1:48 shall be provided at shooting facilities with firing positions. [**ADA/ABA-AG:** 1010.1]

--`,,```,,,,````-`-`,,`,,`,`,,`---
Copyright National Fire Protection Association
Provided by IHS under license with NFPA
No reproduction or networking permitted without license from IHS
Not for Resale

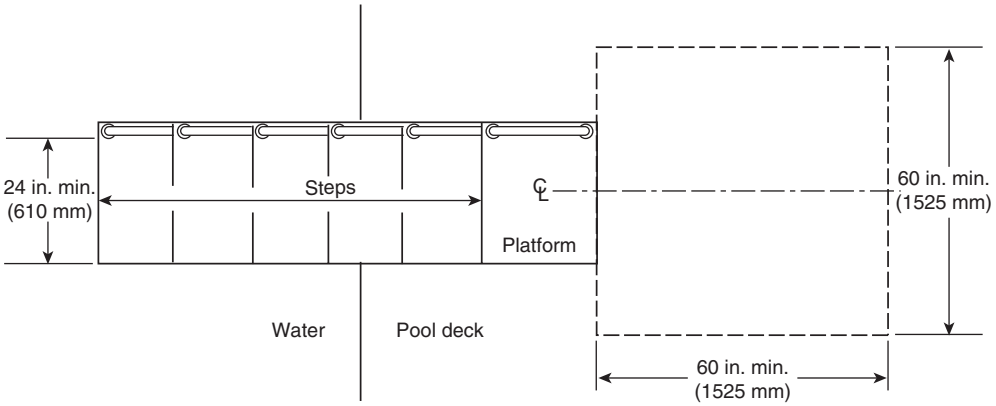

FIGURE 12.45.15.5.2 Clear Deck Space at Transfer Platform. [ADA/ABA-AG: Figure 1009.5.2]

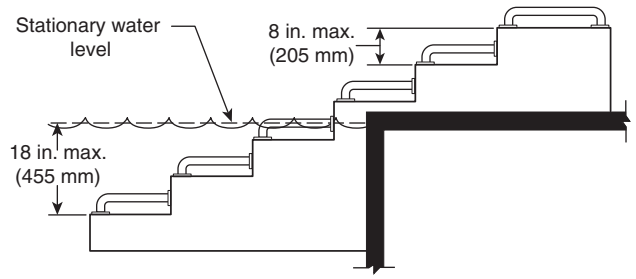

FIGURE 12.45.15.5.4 Transfer Steps. [ADA/ABA-AG: Figure 1009.5.4]

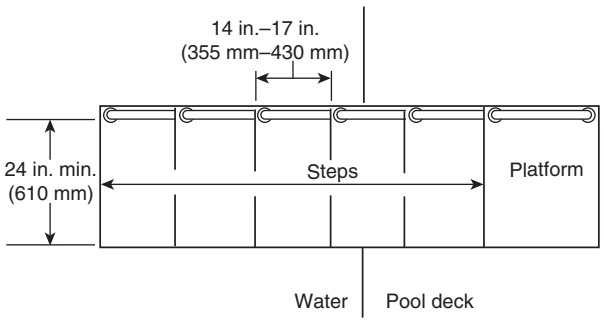

FIGURE 12.45.15.5.6 Size of Transfer Steps. [ADA/ABA-AG: Figure 1009.5.6]

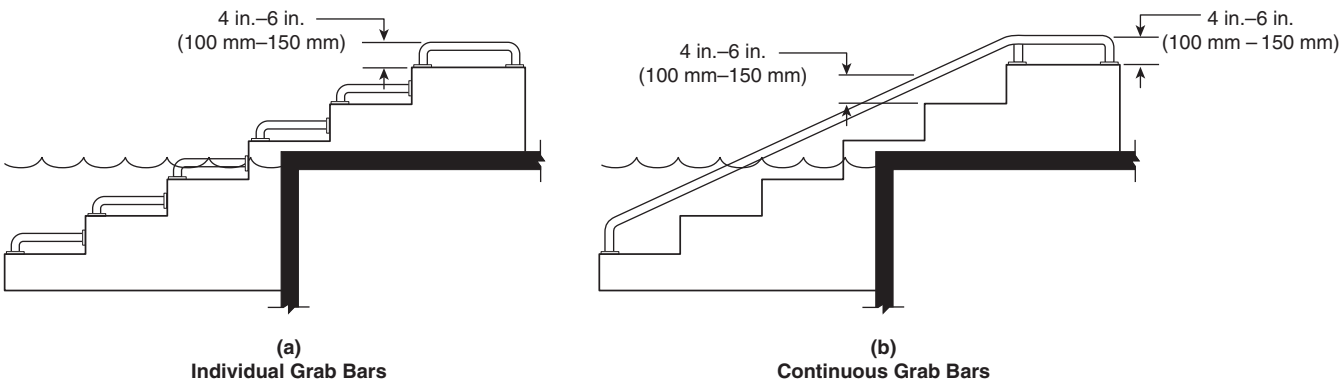

FIGURE 12.45.15.5.7 Grab Bars. [ADA/ABA-AG: Figure 1009.5.7]

Copyright National Fire Protection Association
Provided by IHS under license with NFPA
No reproduction or networking permitted without license from IHS
Not for Resale

Chapter 13 Encroachments into the Public Right-of-Way

13.1 General.

13.1.1 No part of any structure or any appendage thereto, except signs, shall project beyond the property lines of the building site, except as specified in Section 13.1. Signs and their method of installation shall conform to the requirements of Chapter 32.

13.1.2 Structures or appendages regulated by this *Code* shall be constructed of materials as specified in Chapter 35.

13.1.3 The projection of any structure or appendage shall be the distance measured horizontally from the property line to the outermost point of the projection.

13.1.4 No provisions of this chapter shall be construed to permit the violation of other laws or ordinances regulating the use and occupancy of public property.

13.2 Projection into Alleys.

13.2.1 No part of any structure or any appendage thereto shall project into any alley.

13.2.2 A curb or buffer block shall be permitted to project not more than 9 in. (230 mm) into an alley and shall not exceed a height of 9 in. (230 mm) above grade.

13.2.3 Footings located at least 8 ft (2440 mm) below grade shall be permitted to project not more than 12 in. (305 mm) into an alley.

13.3 Space Below Sidewalk. The space adjoining a building below a sidewalk on public property shall be permitted to be used and occupied in connection with the building for a purpose not inconsistent with this *Code*, or other laws or rules regulating the use and occupancy of such space, on the condition that the right to use and occupy shall be permitted to be revoked by the authority having jurisdiction at any time, and that the owner of the building will construct the necessary walls and footing to separate such space from the building and pay all costs and expenses attendant thereto.

13.4 Balconies and Appendages. Oriel windows; balconies; unroofed porches; cornices; belt courses; and appendages such as water tables, sills, capitals, bases, and architectural projections shall be permitted to project over the public property of the building side, for a distance determined by the clearance of the lowest point of the projection above the grade immediately below, as follows:

(1) Clearance above grade less than 8 ft (2440 mm) — no projection permitted
(2) Clearance above grade over 8 ft (2440 mm) — 1 in. (25 mm) of projection permitted for each additional 1 in. (25 mm) of clearance, provided that no such projection exceeds a distance of 48 in. (1220 mm)

13.5 Doors. Doors, while either fully opened or while opening, shall not project beyond the property line.

13.6 Roof Drainage. Drainage water from the roof of a building shall not be permitted to flow over or accumulate on a public walkway.

13.7 Air-Right Structures. Air-right structures shall comply with the requirements of this *Code* and NFPA 502, *Standard for Road Tunnels, Bridges, and Other Limited Access Highways*.

13.8 Skywalk Bridges.

13.8.1 General. Skywalk bridges shall comply with 13.8.2 through 13.8.7.

13.8.2 Building Separations. Required building separations shall be in accordance with Chapter 37, regardless of whether fire barriers are required in accordance with Chapters 7 or 8. Smoke barriers in accordance with Section 8.11 shall separate the skywalk bridge from adjacent buildings.

13.8.3 Exits. Each building connected by a skywalk bridge shall have exits as required by this *Code*.

13.8.4 Vertical Clearance. Skywalk bridges shall have a minimum of 16 ft 6 in. (5030 mm) clearance above the existing street grade in the center lane, and a minimum of 15 ft (4570 mm) clearance above the street pavement at the curb and over alleys.

13.8.5 Dimensions. Skywalk bridges shall be not less than 8 ft (2440 mm), nor more than 14 ft (4270 mm), in width, and not more than 14 ft (4270 mm) in height.

13.8.6 Ramps. Ramps within the skywalk bridge shall not exceed a slope of 1 in 12. There shall be no steps within a skywalk bridge.

13.8.7 Street Access. Skywalk bridges shall have pedestrian access to and from the street level. Access shall be available at a minimum of one of the termini points of each skywalk bridge.

Chapter 14 Safeguards During Construction

14.1* Purpose. The purpose of this chapter shall be to provide regulations for reasonable safety for life, limb, and property during building construction and demolition.

14.2 Application. The provisions of Section 14.2 and NFPA 241, *Standard for Safeguarding Construction, Alteration, and Demolition Operations*, shall apply to all building and demolition operations and shall not be construed as replacing or conflicting with the provisions of other sections of this *Code*.

14.3 Protection of Utilities. Substantial protective frame and boarding shall be built around and over every street lamp, utility box, fire or police alarm box, fire hydrant, catch basin, and manhole that can be damaged by work being done and shall not obstruct the normal functioning of the device being protected.

14.4 Temporary Light and Power. All parts of a building under construction or being demolished, for which temporary lighting and power are required, shall be in accordance with the requirements of NFPA 70, *National Electrical Code*.

14.5 Use of Explosives. Explosives shall not be used in the demolition of a building without written approval of the authority having jurisdiction and, when used, shall conform to the requirements of NFPA 1, *Uniform Fire Code*.

Chapter 15 Building Rehabilitation

15.1 Administration.

15.1.1 Purpose and Intent.

15.1.1.1 The purpose of this chapter is to encourage the continued use or reuse of legally existing buildings and structures.

Copyright National Fire Protection Association
Provided by IHS under license with NFPA
No reproduction or networking permitted without license from IHS
Not for Resale

The intent of this chapter is to permit repairs, renovations, modifications, reconstructions, additions, and changes of use that maintain or improve the health, safety, and welfare of occupants in existing buildings, without requiring full compliance with the other sections of this *Code*, the mechanical code, plumbing code, fire code, electrical code, boiler safety code, energy code, elevator code, or accessibility code, except for proportional additional work as specified in this chapter.

15.1.1.2 Nothing in this chapter shall be interpreted as requiring the repair, renovation, modification, or reconstruction of existing buildings, provided that no unsafe condition is present as described in 1.7.5.3.1.1 and 1.7.5.3.1.2.

15.1.1.3 Damaged buildings or buildings where unsafe conditions are present shall be corrected in accordance with the requirements provided in Section 15.9.

15.1.1.4 All work shall be classified into categories for repair, renovation, modification, reconstruction, change of use, and addition, with specific requirements established for each work category.

15.1.1.5 Nothing in this chapter shall be interpreted as excluding the use of the performance-based option of Chapter 5.

15.1.1.6 Work of more than one category shall be permitted to be part of a single work project.

15.1.1.6.1 Where a project includes one category of work in one building area and another category of work in a separate area of the building, each project area shall comply with the requirements of the respective category of work.

15.1.1.6.2 The separate rehabilitation work areas shall not be considered together for the purpose of determining supplemental requirements.

15.1.1.6.3 Where a project consisting of modifications and reconstruction is performed in the same work area, or in contiguous work areas, the project shall comply with the requirements applicable to a reconstruction, unless otherwise provided in 15.1.1.6.4.

15.1.1.6.4 Where the reconstruction work area is less than 10 percent of the modification work area, each shall be considered as an independent work area, and the respective requirements shall apply.

15.1.1.7 Except for repair in accordance with Section 15.3, all new work shall comply with the materials and methods requirements. *(See 3.3.389, Materials and Methods Requirements.)*

15.1.1.8 Unless specifically required in this chapter, parts of the existing building outside of the rehabilitation work area shall not be required to comply with the requirements of this *Code* for new construction.

15.1.2 Compliance.

15.1.2.1 Categories of Work. Repairs, renovations, modifications, reconstruction, additions, and changes of use shall conform to the requirements of this chapter.

15.1.2.2 Equivalent Alternatives.

15.1.2.2.1 Equivalency shall be permitted in accordance with Section 1.5.

15.1.2.2.2* Where this chapter requires compliance with the seismic design provisions of Chapter 35, the use of FEMA 356, *Prestandard and Commentary for the Seismic Rehabilition of Buildings*, shall be permitted. Where FEMA 356 is used, the seismic performance criteria shall be as indicated in Table 15.1.2.2.2 for the assigned occupancy category.

Table 15.1.2.2.2 Seismic Performance Criteria

	FEMA 356 Performance Levels	
Occupancy Category *(See Table 35.3.1)*	**BSE-1 Earthquake Hazard Level***	**BSE-2 Earthquake Hazard Level***
I	LS	CP
II	LS	CP
III†		
IV	IO	LS

LS: Life safety.
CP: Collapse prevention.
IO: Immediate occupancy.
*BSE-1 and BSE-2 hazards are defined in FEMA 356.
†Values for Occupancy Category III performance levels are to be taken as halfway between the values specified for Occupancy Category II and Occupancy Category IV.

15.1.2.3 Other Alternatives.

15.1.2.3.1 Where compliance with this chapter, or with any other code as required by this chapter, is technically infeasible or would impose undue hardship because of structural, construction, or dimensional difficulties, the authority having jurisdiction shall be permitted to accept other alternative materials, design features, and operational features.

15.1.2.3.2* Where permitted in this chapter, seismic design using ASCE/SEI 31, *Seismic Evaluation of Existing Buildings*, or FEMA 356 shall be permitted. Where either ASCE/SEI 31 or FEMA 356 is used, the seismic performance criteria shall be as indicated in Table 15.1.2.3.2 for the assigned occupancy category.

Table 15.1.2.3.2 Reduced Seismic Performance Criteria

		FEMA 356 Performance Levels	
Occupancy Category *(See Table 35.3.1)*	**ASCE/SEI 31 Performance Levels**	**BSE-1 Earthquake Hazard Level***	**BSE-2 Earthquake Hazard Level***
I	LS	LS	NR
II	LS	LS	NR
III†			NR
IV	IO	IO	NR

LS: Life safety.
NR: Not required.
IO: Immediate occupancy.
*BSE-1 and BSE-2 hazards are as defined in FEMA 356.
†Values for Occupancy Category III performance levels are to be taken as halfway betwen the values specified for Occupancy Category II and Occupancy Category IV.

Copyright National Fire Protection Association
Provided by IHS under license with NFPA
No reproduction or networking permitted without license from IHS
Not for Resale

15.1.2.4 Compliance with Other Codes. Buildings, elements, components, or systems in compliance with other sections of this *Code*, or the current edition of the mechanical code, plumbing code, fire code, electrical code, boiler safety code, energy code, elevator code, or accessibility code, shall not be required to comply with any more restrictive requirement of this chapter.

15.1.2.4.1 Elements, components, and systems of existing buildings with features that exceed the requirements of the codes for new construction, and not otherwise required as part of prior documented, approved alternative arrangements, shall not be prevented by this chapter from being modified, provided that they remain in compliance with the applicable codes for new construction.

15.1.2.4.2* Existing life safety features obvious to the public, if not required by the *Code*, shall be either maintained or removed.

15.1.2.4.3 The provisions of this chapter shall not supersede any codes or ordinances that address dangerous or unsafe buildings.

15.1.2.4.4 Work mandated by any accessibility code, property code, housing code, or fire code, or mandated by any licensing rule or ordinance, that has been adopted pursuant to law, shall conform only to the requirements of that code, rule, or ordinance and shall not be required to conform to this chapter, unless the code requiring such work so provides.

15.1.2.4.5 Buildings and structures located wholly or partially within the flood hazard area established by 39.4.2 shall comply with Section 39.13.

15.1.3 Preliminary Meeting.

15.1.3.1 If a building permit is required for a complex rehabilitation project involving multiple codes, the authority having jurisdiction or its designee, and representatives from all necessary agencies, shall meet with the prospective permit applicant at the request of the prospective applicant, and upon payment of a fee if required by the local jurisdiction, prior to the submission of the construction permit application. The purpose of such meeting shall be to discuss plans for any proposed work or change of occupancy under this *Code* prior to the application for the permit.

15.1.3.1.1* The preliminary meeting, to the extent possible, shall include the officials responsible for permit approval and enforcement with respect to the following, as applicable to the rehabilitation project:

(1) Building code
(2) Mechanical code
(3) Plumbing code
(4) Electrical code
(5) Fire code
(6) Boiler safety code
(7) Energy code
(8) Elevator code
(9) Local historic preservation ordinances

15.1.3.1.2 Decisions made at the preliminary meeting shall be binding upon the prospective applicant and the code officials, unless unforeseen circumstances arise that were unknown or could not be ascertained at the time of the preliminary meeting.

15.1.3.2 For a rehabilitation project or portion thereof that is in the repair, renovation, or modification category of work, a preliminary meeting shall be permitted to be granted at the discretion of the authority having jurisdiction where a request for a preliminary meeting is made by the prospective applicant prior to the submission of the construction permit application.

15.1.4 Identification of the Work Area. The rehabilitation work area *(see 3.3.33.12.2, Rehabilitation Work Area)* shall be clearly identified on all construction permit applications, construction documents, and permits required by the authority having jurisdiction.

15.1.5 Structural Evaluation. A structural evaluation shall be performed and submitted to the authority having jurisdication where required by this chapter for renovation, modification, or reconstruction work, or where a change in use or occupancy results in an increase in the defined occupancy category, per Table 35.3.1, or where required for damaged or unsafe buildings in accordance with Section 15.9.

15.2 Definitions and Chapter Organization.

15.2.1 Definitions. See Chapter 3 for definitions of terms.

15.2.2 Organization of Chapter 15.

15.2.2.1 Repair. *Repair* shall be defined as the patching, restoration, or painting of materials, elements, equipment, or fixtures for the purpose of maintaining such materials, elements, equipment, or fixtures in good or sound condition. Repair shall not include work that is covered by Section 15.9. *(See Section 15.3.)*

15.2.2.2 Renovation. *Renovation* shall be defined as the replacement in kind, or strengthening of load-bearing elements; or the refinishing, replacement, bracing, strengthening, or upgrading of existing materials, elements, equipment, or fixtures, without reconfiguration of spaces. *(See Section 15.4.)*

15.2.2.3 Modification. *Modification* shall be defined as the reconfiguration of any space, the addition or elimination of any door or window, the addition or elimination of load-bearing elements, the reconfiguration or extension of any system, or the installation of any additional equipment. *(See Section 15.5.)*

15.2.2.4 Reconstruction. *Reconstruction* shall be defined as the reconfiguration of a space that affects an exit, or a corridor shared by more than a single tenant; or reconfiguration of space such that the rehabilitation work area is not permitted to be occupied because existing means of egress and fire protection systems, or their equivalent, are not in place or continuously maintained. *(See Section 15.6.)*

15.2.2.5 Change of Use. *Change of use* shall be defined as a change in the purpose or level of activity within a structure that involves a change in application of the requirements of the building code. *(See Section 15.7.)*

15.2.2.6 Change of Occupancy Classification. *Change of occupancy classification* shall be defined as a change of use involving a change in the occupancy classification of a structure or portion of a structure. *(See Section 15.7.)*

15.2.2.7 Addition. *Addition* shall be defined as an increase in the building area, aggregate floor area, height, or number of stories of a structure. *(See Section 15.8.)* [**ASCE 7:**9.2.1]

Copyright National Fire Protection Association
Provided by IHS under license with NFPA
No reproduction or networking permitted without license from IHS
Not for Resale

15.2.2.8 Historic Building. *Historic building* shall be defined as a building or facility deemed to have historical, architectural, or cultural significance by a local, regional, or national jurisdiction. *(See Section 15.10.)*

15.3 Repair.

15.3.1 General Requirements.

15.3.1.1 Repair, in other than historic buildings, shall comply with the requirements of Section 15.3. *(See 3.3.516, Repair.)*

15.3.1.2 Repair in historic buildings shall comply with the requirements of one of the following:

(1) Section 15.3
(2) Section 15.3, as modified by Section 15.10

15.3.1.3 Except as is otherwise required herein, work shall be done using like materials, or materials permitted by other sections of this *Code*, the mechanical code, plumbing code, fire code, electrical code, boiler safety code, or elevator code, as applicable.

15.3.1.3.1 Hazardous materials that are no longer permitted, such as asbestos and lead-based paint, shall not be used.

15.3.1.3.2 Replacement glazing in hazardous locations shall comply with the safety glazing requirements of Chapter 46, unless otherwise provided in 15.3.1.3.2.1 and 15.3.1.3.2.2.

15.3.1.3.2.1 Glass-block walls shall be permitted to be repaired using like materials.

15.3.1.3.2.2 Louvered windows and jalousies shall be permitted to be repaired using like materials.

15.3.1.4 Repairs shall not require parts of the existing building not subject to the work involved to comply with the requirements of this *Code* for new construction.

15.3.1.5 Repairs shall not make the building less conforming with other sections of this *Code*, with the mechanical code, plumbing code, fire code, electrical code, boiler safety code, energy code, elevator code, or accessibility code, or with any previously approved alternative arrangements, than it was before the repair was undertaken.

15.3.2 Nonstructural Requirements. (Reserved)

15.3.3 Structural Requirements. The work shall cause no diminution of structural strength.

15.3.4 Accessibility Requirements. (Reserved)

15.3.5 Electrical Requirements. Existing electrical wiring and equipment undergoing repair shall be permitted to be repaired or replaced with like material and shall comply with the following criteria:

(1) Electrical products shall comply with Section 110.3(B) of NFPA 70, *National Electrical Code*.
(2) Replacement of electrical receptacles shall comply with the requirements of Section 406.3(D) of NFPA 70.
(3) Plug fuses of the Edison-base type shall be permitted to be used for replacements only where there is no evidence of overfusing or tampering per Section 240.51(B) of NFPA 70.
(4) For replacement of non-grounding-type receptacles with grounding-type receptacles, and for branch circuits that do not have an equipment grounding conductor in the branch circuit, the grounding conductor of a grounding-type receptacle outlet shall be permitted to be grounded to any accessible point on the grounding electrode system, as described in Section 250.130(C) of NFPA 70, or to any accessible point on the grounding electrode conductor.
(5) Non-hospital-grade receptacles in patient bed locations of health care occupancies shall be replaced with hospital-grade receptacles, as required by NFPA 99, *Standard for Health Care Facilities*.
(6) Frames of electric ranges, wall-mounted ovens, counter-mounted cooking units, clothes dryers, and outlet or junction boxes that are part of the existing branch circuit for these appliances shall be permitted to be grounded to the grounded circuit conductor, provided that all the conditions of Section 250.60 of NFPA 70 are met.

15.3.6 Mechanical Requirements.

15.3.6.1 Defective material or parts shall be replaced or repaired in such a manner so as to preserve the original approval or listing.

15.3.6.2 Temporary repairs shall not be made to a damaged heat exchanger.

15.3.7 Plumbing Requirements.

15.3.7.1 The following plumbing materials and supplies shall not be used:

(1) All-purpose solvent cement, other than transition glues
(2) Flexible traps and tailpieces
(3) Sheet and tubular copper and brass trap and tailpiece fittings less than B&S 17 gauge (0.045 in.)
(4) Solder having more than 0.2 percent lead in the repair of potable water systems

15.3.7.2 Where any water closet, urinal, lavatory faucet, kitchen faucet or shower head is replaced, the replacement fixture shall comply with the water conservation requirements specified in the plumbing code.

15.3.8 Boiler and Pressure Vessel Requirements.

15.3.8.1 Repairs and replacements of fittings or appliances for boilers and pressure vessels shall comply with the appropriate ASME code.

15.3.8.2 Repairs of boilers and pressure vessels shall comply with the requirements specified in the boiler safety code.

15.3.9 Elevator Requirements. All repairs shall be done in accordance with Section 8.6 of ASME A17.1, *Safety Code for Elevators and Escalators*.

15.4 Renovation.

15.4.1 General Requirements.

15.4.1.1 Renovation, in other than historic buildings, shall comply with the requirements of Section 15.4. *(See 3.3.515, Renovation.)*

15.4.1.2 Renovation in historic buildings shall comply with the requirements of one of the following:

(1) Section 15.4
(2) Section 15.4, as modified by Section 15.10

15.4.1.3 Where renovations are made, parts of the existing building not subject to the work involved shall not be required to comply with the requirements of this *Code* for new construction.

15.4.1.4 Renovations shall not make the building less conforming with other sections of this *Code*, with the mechanical code, plumbing code, fire code, electrical code, boiler safety

Copyright National Fire Protection Association
Provided by IHS under license with NFPA
No reproduction or networking permitted without license from IHS
Not for Resale

code, energy code, elevator code, or accessibility code, or with any previously approved alternative arrangements, than it was before the renovation was undertaken, unless otherwise provided in 15.4.1.5.

15.4.1.5 Minor reductions in the clear opening dimensions of replacement doors and windows that result from the use of different materials shall be permitted, unless such reductions are prohibited by 28 CFR, 36, *Americans with Disabilities Act Accessibility Guidelines* (ADAAG).

15.4.2 Nonstructural Requirements.

15.4.2.1 Replacement interior finish materials shall comply with the requirements of this *Code* for new construction. New interior finish materials shall be regulated per Section 15.5 as a modification.

15.4.2.2 New carpeting used as an interior floor finish material shall comply with the radiant flux requirements for new construction.

15.4.2.3 Replacement glazing in hazardous locations shall comply with the safety glazing requirements of Chapter 46, unless otherwise provided in 15.4.2.3.1 and 15.4.2.3.2.

15.4.2.3.1 Glass-block walls shall be permitted to be repaired using like materials.

15.4.2.3.2 Louvered windows and jalousies shall be permitted to be repaired using like materials.

15.4.2.4 All reroofing shall comply with 15.4.2.5 through 15.4.2.10.

15.4.2.5 A maximum of two layers of roof covering shall be permitted on any roof.

15.4.2.6 The following shall apply to reroofing of wet areas:

(1) Reroofing shall not be installed over areas where the roof deck or above-deck components are wet.
(2) In wet areas, the roof covering and insulation shall be cut out, and the roof deck shall be dried, cleaned, and repaired or replaced as necessary.
(3) All above-deck components shall be replaced.

15.4.2.7 The addition of a reroofing system shall result in performance of the composite assembly that meets the requirements of Chapter 38.

15.4.2.8 Where reroofing systems are adhered directly to an existing roof system, verification that the existing roof system provides wind resistance as required by Section 38.4 shall be required.

15.4.2.9 Access shall be provided to spaces created where a new roof assembly is constructed over an existing roof where one of the following conditions applies:

(1) The existing roof covering is not one of the types identified in 38.2.1.
(2) The new roof assembly is of combustible construction.

15.4.2.9.1 The requirements of 15.4.2.9 shall not apply, provided that one of the following criteria is met:

(1) Access shall not be required to spaces created where a new, noncombustible roof covering is applied on noncombustible structural supports, and the existing roof covering is covered with a noncombustible or limited-combustible material.
(2) Access shall not be required where the space created is protected by an approved sprinkler system in accordance with NFPA 13, *Standard for the Installation of Sprinkler Systems.*
(3) Access shall not be required where the joist channels are fireblocked into volumes not exceeding 160 ft^3 (4.5 m^3).

15.4.2.9.2 Where required, access shall be provided every 2500 ft^2 (232 m^2) by an accessible opening of 20 in. × 30 in. (500 mm × 760 mm).

15.4.2.9.3 Access shall not be required to spaces where both of the following conditions exist:

(1) The vertical distance between the existing roof and the new roof is less than 12 in. (305 mm).
(2) A noncombustible or limited-combustible material is applied directly over the existing roof covering where it is not one of the types identified in 38.2.1.

15.4.2.10 Complete and separate roofing systems shall be permitted to be installed without the removal of existing roof coverings where the new roofing system is designed to transmit roof loads directly to the building's structural system without relying on existing roof coverings for support.

15.4.3 Structural Requirements.

15.4.3.1 Structural Design Criteria.

15.4.3.1.1 Changes to structural elements shall be classified as incidental structural changes where they result in all of the following:

(1) No greater than a 10 percent increase in loads to any structural element
(2) No greater than a 10 percent increase in *Code*-specified lateral forces to any story
(3) No greater than a 10 percent decrease in the total lateral strength of any story

15.4.3.1.2 Incidental structural changes shall be designed to resist the loads applicable at the time the building was constructed.

15.4.3.1.3 Structural changes that are more than incidental shall be designed to resist the minimum design loads defined in Chapter 35.

15.4.3.2 Structurally Unsafe Elements. Structural elements that are discovered to be structurally unsafe during the course of the renovation shall be evaluated and, where necessary, corrected in accordance with Section 15.9.

15.4.4 Accessibility Requirements.

15.4.4.1 Dwelling Units. Dwelling units, as defined in the accessibility code, that are undergoing renovation shall comply with the applicable requirements of the accessibility code, unless otherwise provided in 15.4.4.1.1 through 15.4.4.1.5.

15.4.4.1.1 The requirement of 15.4.4.1 shall not apply to reroofing.

15.4.4.1.2 The requirement of 15.4.4.1 shall not apply to changes to mechanical and electrical systems that do not affect the usability of the building or facility.

15.4.4.1.3 The requirement of 15.4.4.1 shall not apply to dwelling units used on a transient basis and covered under 15.4.4.2 or 15.4.4.3.

Copyright National Fire Protection Association
Provided by IHS under license with NFPA
No reproduction or networking permitted without license from IHS
Not for Resale

15.4.4.1.4 The requirement of 15.4.4.1 shall not apply to residential buildings consisting of less than four dwelling units.

15.4.4.1.5 The requirement of 15.4.4.1 shall not apply to existing buildings and facilities, as defined in the accessibility code, that are undergoing renovation for the sole purpose of complying with the Americans with Disabilities Act, which requires removal of architectural barriers in existing buildings and facilities where removal is readily achievable.

15.4.4.2 State and Local Government Buildings and Facilities. State-owned and local government–owned buildings and facilities, as defined in the accessibility code, that are undergoing renovation shall comply with the applicable requirements of the accessibility code, unless otherwise provided in 15.4.4.2.1 through 15.4.4.2.5.

15.4.4.2.1 The requirement of 15.4.4.2 shall not apply to reroofing.

15.4.4.2.2 The requirement of 15.4.4.2 shall not apply to changes to mechanical and electrical systems that do not affect the usability of the building or facility.

15.4.4.2.3 The requirement of 15.4.4.2 shall not apply to observation galleries of less than 150 ft^2 (13.9 m^2) and used primarily for security purposes.

15.4.4.2.4 The requirement of 15.4.4.2 shall not apply to nonoccupiable spaces accessed only by ladders, catwalks, crawl spaces, very narrow passageways, or nonpassenger freight elevators, and frequented only by service personnel for repair purposes, including, but not limited to, elevator pits, elevator penthouses, and piping or equipment catwalks.

15.4.4.2.5 The requirement of 15.4.4.2 shall not apply to existing buildings and facilities undergoing renovation for the sole purpose of complying with the Americans with Disabilities Act, which requires removal of architectural barriers in existing buildings and facilities where removal is readily achievable.

15.4.4.3 All Other Buildings and Facilities. Buildings and facilities, as defined in the accessibility code, that are undergoing renovation, and are not covered by 15.4.4.1 and 15.4.4.2, shall comply with the applicable requirements of the accessibility code, unless otherwise provided in 15.4.4.3.1 through 15.4.4.3.5.

15.4.4.3.1 The requirement of 15.4.4.3 shall not apply to reroofing.

15.4.4.3.2 The requirement of 15.4.4.3 shall not apply to changes to mechanical and electrical systems that do not affect the usability of the building or facility.

15.4.4.3.3 The requirement of 15.4.4.3 shall not apply to observation galleries of less than 150 ft^2 (13.9 m^2) and used primarily for security purposes.

15.4.4.3.4 The requirement of 15.4.4.3 shall not apply to nonoccupiable spaces accessed only by ladders, catwalks, crawl spaces, very narrow passageways, or nonpassenger freight elevators, and frequented only by service personnel for repair purposes, including, but not limited to, elevator pits, elevator penthouses, and piping or equipment catwalks.

15.4.4.3.5 The requirement of 15.4.4.3 shall not apply to existing buildings and facilities undergoing renovation for the sole purpose of complying with the Americans with Disabilities Act, which requires removal of architectural barriers in existing buildings and facilities where removal is readily achievable.

15.4.5 Electrical Requirements. (Reserved)

15.4.6 Mechanical Requirements. (Reserved)

15.4.7 Plumbing Requirements.

15.4.7.1 Discharge.

15.4.7.1.1 In areas where public sanitary sewers are not available, existing structures that are being renovated, and that discharge liquid wastes containing grease, flammable wastes, sand, solids, and other ingredients harmful to the building drainage system, shall either permanently plug all existing floor drains or shall retrofit all existing floor drains so as to allow them to flow into an approved sand interceptor that drains into a 1000 gal (3.8 m^3) or larger approved holding tank.

15.4.7.1.2 An oil and water separator shall not be required where the waste discharges into a holding tank.

15.4.7.1.3 Any renovation of an existing structure that discharges liquid wastes containing grease, flammable wastes, sand, solids, and other ingredients harmful to the building drainage system, or that discharges other industrial waste waters, shall have the option of discharging into an on-site subsurface disposal system, provided that the facility's owner/operator applies for and obtains a water discharge permit.

15.4.7.2 Water Conservation. Where any water closet, urinal, lavatory faucet, kitchen faucet, or shower head is replaced, the replacement fixture shall comply with the water conservation requirements of the plumbing code.

15.4.8 Boiler and Pressure Vessel Requirements.

15.4.8.1 A replacement boiler installed in an existing building shall comply with access and egress requirements of the boiler safety code.

15.4.8.2 A boiler room in which a replacement boiler is installed shall comply with the air and ventilation requirements specified in the boiler safety code.

15.4.8.3 Replacement of fittings, appliances, and boilers shall be in accordance with the appropriate ASME code.

15.4.9 Elevator Requirements. Any renovation of an existing elevator shall comply with Section 8.7 of ASME A17.1.

15.5 Modification.

15.5.1 General Requirements.

15.5.1.1 General Modification. Modification, in other than historic buildings, shall comply with the requirements of Section 15.5. *(See 3.3.402, Modification.)*

15.5.1.2 Historic Buildings. Modification in historic buildings shall comply with the requirements of one of the following:

(1) Section 15.5
(2) Section 15.5, as modified by Section 15.10

15.5.1.3 Extensive Modification.

15.5.1.3.1 The modification of an entire building or an entire occupancy within a building shall be considered as a reconstruction and shall comply with the requirements of Section 15.6 for the applicable occupancy, unless otherwise provided in 15.5.1.3.2.

15.5.1.3.2 Modification work that is exclusively electrical, mechanical, or structural, or that exclusively involves plumbing or the fire protection system, shall not be considered a reconstruction, regardless of its extent.

Copyright National Fire Protection Association
Provided by IHS under license with NFPA
No reproduction or networking permitted without license from IHS
Not for Resale

15.5.1.3.3 Where the total area of all the rehabilitation work areas included in a modification exceeds 50 percent of the area of the building, the work shall be considered as a reconstruction and shall comply with the requirements of Section 15.6 for the applicable occupancy, unless otherwise provided in 15.5.1.3.4.

15.5.1.3.4 Rehabilitation work areas in which the modification work is exclusively mechanical or electrical, or in which the modification work exclusively involves plumbing or the fire protection system, shall not be included in the computation of total area of all rehabilitation work areas.

15.5.1.3.5 In health care occupancies, modifications of more than 50 percent or 4500 ft^2 (420 m^2) of the area of the smoke compartment shall comply with 15.6.2.5.2.3. Work that is exclusively mechanical or electrical, or that exclusively involves plumbing, the fire protection system, medical gas, or medical equipment, shall not be included in the computation of the modification area within the smoke compartment.

15.5.1.4 Additional Requirements. In addition to the requirements of Section 15.5, all work shall comply with all the requirements of Section 15.4.

15.5.1.5 Newly Constructed Elements, Components, and Systems. All newly constructed elements, components, and systems shall comply with the requirements of other sections of this *Code*, the mechanical code, plumbing code, fire code, electrical code, boiler safety code, energy code, elevator code, and accessibility code, unless otherwise provided in 15.5.1.5.1 and 15.5.1.5.2.

15.5.1.5.1 Openable windows shall be permitted to be added without requiring compliance with the light and ventilation requirements of Chapter 49.

15.5.1.5.2 Newly installed electrical equipment shall comply with the requirements of 15.5.5.

15.5.1.6 Noncompliance and Nonconformity. The modification work shall not increase the extent of noncompliance with the requirements of Section 15.6 or create a nonconformity with those requirements that did not previously exist.

15.5.2 Nonstructural Requirements.

15.5.2.1 Interior Space Dimensions.

15.5.2.1.1 In residential occupancies other than one- and two-family dwellings, where habitable rooms *(see 3.3.534.4, Habitable Room)* are created in a previously unoccupied space, other than a kitchen, they shall not be less than 7 ft (2135 mm) in any plan dimension.

15.5.2.1.2 In residential occupancies other than one- and two-family dwellings, where habitable rooms *(see 3.3.534.4, Habitable Room)* are created in a previously unoccupied space, they shall have a ceiling height of not less than 7 ft (2135 mm), unless otherwise provided in 15.5.2.1.2.1 and 15.5.2.1.2.2.

15.5.2.1.2.1 The requirement of 15.5.2.1.2 shall not apply to beams, girders, ducts, or pipes spaced not less than 48 in. (1220 mm) on center and projecting not more than 6 in. (150 mm) below the required ceiling height.

15.5.2.1.2.2 For rooms with a sloped ceiling, the minimum 7 ft (2135 mm) ceiling height shall be exempted for all but 35 ft^2 (3.25 m^2) of the floor area of the room. Any portion of the room measuring less than 60 in. (1525 mm) from the finished floor to the finished ceiling shall not be considered usable floor area and shall not be included in any computation of the minimum area thereof.

15.5.2.1.3 In apartment occupancies, where habitable rooms *(see 3.3.534.4, Habitable Room)* are created in a previously unoccupied space, other than a kitchen, they shall have a net floor area of not less than 70 ft^2 (6.5 m^2).

15.5.2.2 Health Care Occupancies.

15.5.2.2.1 Where automatic sprinklers are not provided, modifications in nonsprinklered health care occupancies shall comply with 19.4.3.

15.5.2.2.2 In modifications where the smoke compartment is not protected throughout by an approved, electrically supervised automatic sprinkler system, corridor walls shall have a fire resistance rating of not less than ½ hour, shall be continuous from the floor to the underside of the floor or roof deck above, and shall resist the passage of smoke.

15.5.2.2.3 In modifications where the smoke compartment is not protected throughout by an approved, electrically supervised automatic sprinkler system, doors protecting corridor openings shall be constructed of 1¾ in. (44 mm) thick, solid-bonded core wood or of construction that resists the passage of fire for not less than 20 minutes.

15.5.2.2.4 In modifications, existing roller latches demonstrated to keep the door closed against a force of 5 lbf (22 N) shall be permitted.

15.5.2.2.5 In modifications where the smoke compartment is not protected throughout by an approved, electrically supervised automatic sprinkler system, door frames shall be labeled or shall be of steel.

15.5.2.3 Detection and Correctional Occupancies. Where automatic sprinklers are not provided, modifications in nonsprinklered detention and correctional occupancies shall comply with 21.4.4.

15.5.3 Structural Requirements.

15.5.3.1 Structural Design Criteria.

15.5.3.1.1 Incidental structural changes to the structure per 15.4.3.1.1 shall be designed to resist the loads applicable at the time the building was constructed.

15.5.3.1.2 Structural changes that are more than incidental per 15.4.3.1.11 shall be designed to resist the minimum design loads defined in Chapter 35, except as permitted by 15.5.3.1.2.1, 15.5.3.1.2.2, or 15.5.3.1.3.

15.5.3.1.2.1 Seismic loads shall be permitted to be 75 percent of those otherwise required in this *Code*.

15.5.3.1.2.2 Use of the alternative seismic requirements in 15.1.2.3.2 shall be permitted.

15.5.3.1.3 Voluntary modifications to the lateral force resisting system initiated for the purpose of increasing the lateral force resisting strength or stiffness of a building, and not required by other provisions of this *Code*, shall be required to meet only the requirements of 15.5.3.3.

15.5.3.2 Substantial Changes.

15.5.3.2.1 Where the modification work area is greater than 50 percent of the floor area of any story of the building or structure and structural changes are more than incidental, per

Copyright National Fire Protection Association
Provided by IHS under license with NFPA
No reproduction or networking permitted without license from IHS
Not for Resale

15.4.3.1.1, a structural evaluation of the portion affected by the structural changes shall be conducted.

15.5.3.2.2 Where structural changes are more than incidental per 15.4.3.1.1, the authority having jurisdiction shall be permitted to require structural evaluation of portions of modification work not subject to the requirements of 15.5.3.2.1.

15.5.3.2.3 A building or structure shall be determined to have substantial structural change where either of the following conditions exists:

(1) The total strength of a structural element, or group of elements, supporting more than 30 percent of the structure's vertical loads will be changed by more than 25 percent from the original condition.
(2) The combined lateral strength of resisting structural elements in any story will be changed by more than 20 percent from its original condition

15.5.3.3 Voluntary Lateral Force Resisting System Modifications. Unless a structural evaluation is submitted demonstrating that the safety of the building or structure has not been reduced, voluntary lateral force resisting system modifications shall comply with the following:

(1) The capacity of existing structural elements shall not be reduced.
(2) Lateral forces applied to existing structural elements shall not be increased beyond their capacity to resist those forces.
(3) The work shall not create a structural irregularity or make an existing irregularity more severe.
(4) New structural elements shall be detailed and constructed in accordance with this *Code*.

15.5.4 Accessibility Requirements. Modifications shall comply with 15.4.4.

15.5.5 Electrical Requirements.

15.5.5.1 New Electrical Equipment and Wiring. All newly installed electrical equipment and wiring relating to work done in any rehabilitation work area shall comply with the materials and methods requirements, and the provisions of 15.5.5.2 shall also apply. *(See 3.3.389, Materials and Methods Requirements.)*

15.5.5.2 New Partitions and Ceilings. Electrical equipment and wiring in newly installed partitions and ceilings shall comply with all applicable requirements of NFPA 70.

15.5.5.3 Existing Wiring. Existing wiring in all rehabilitation work areas in assembly occupancies having an occupant load greater than 300, health care occupancies, detention and correctional occupancies, residential board and care occupancies, and areas containing other than high hazard Level 4 hazardous materials in excess of the exempt amount permitted in Chapter 34 shall be upgraded to meet the materials and methods requirements. *(See 3.3.389, Materials and Methods Requirements.)*

15.5.5.4 Residential Occupancies.

15.5.5.4.1 In other than hotel and dormitory occupancies, service to each existing dwelling unit in any rehabilitation work area shall be a minimum of 100-ampere, three-wire capacity, and service equipment shall be dead front, having no live parts exposed whereby accidental contact could be made. Type S fuses shall be installed in accordance with Section 240.53 and Section 240.54 of NFPA 70 where fused equipment is used, unless otherwise provided in 15.5.5.4.2.

15.5.5.4.2 Existing service of 60-ampere, three-wire capacity, and feeders of 30-ampere or larger, two- or three-wire capacity, shall be accepted if adequate for the electrical load being served.

15.5.5.4.3 The requirements of 15.5.5.4.3.1 through 15.5.5.4.3.7 shall apply to other than hotel and dormitory occupancies where the rehabilitation work area within a dwelling unit includes any of the areas or locations specified in these requirements.

15.5.5.4.3.1 All enclosed areas, other than closets, kitchens, basements, garages, hallways, laundry areas, and bathrooms, shall have a minimum of two duplex receptacle outlets or one duplex receptacle outlet and one ceiling or wall-type lighting outlet.

15.5.5.4.3.2 Kitchen areas shall have a minimum of two duplex receptacle outlets and a hardwired lighting outlet. At least one of the required duplex receptacles shall be provided to serve counter space.

15.5.5.4.3.3 Laundry areas shall have a minimum of one duplex receptacle outlet located near the laundry equipment and installed on an independent circuit.

15.5.5.4.3.4 Ground-fault circuit interruption shall be provided on newly installed receptacle outlets if required by Section 210.8(a) of NFPA 70.

15.5.5.4.3.5 At least one lighting outlet shall be provided in every bathroom, hallway, stairway, attached garage, and detached garage with electric power, and in sufficient quantity to illuminate outdoor entrances and exits.

15.5.5.4.3.6 At least one lighting outlet shall be provided in utility rooms and basements where these spaces are used for storage or contain equipment requiring service.

15.5.5.4.3.7 Clearance for electrical service equipment shall be provided in accordance with Section 110.26 of NFPA 70.

15.5.5.4.4 In other than hotel and dormitory occupancies, where the rehabilitation work area includes spaces converted into kitchen or laundry areas, receptacle outlets in these areas shall comply with applicable requirements of Sections 210.52(a) through (c) and Section 210.52(f) of NFPA 70.

15.5.5.5 Existing Receptacle Outlet Protection. Where ground-fault circuit interruption is not required and the work changes an existing space into a location where such protection is required, existing receptacle outlets shall be provided with such protection in accordance with the following requirements of NFPA 70, as applicable:

(1) Section 210.8 (dwelling units, all bathrooms, and rooftops)
(2) Section 555.19 (boathouses)
(3) Section 511.12 (commercial garages)
(4) Section 620.85 (elevators, escalators, and moving walkways)
(5) Sections 517.20 and 517.21 (health care facilities)
(6) Section 422.49 (high-pressure-spray washing appliances)
(7) Section 680.70 (hydromassage bathtubs)
(8) Sections 550.13(b) and 550.25(d) (mobile homes)
(9) Section 530.21(motion picture and TV studios)
(10) Section 680.5 (permanently installed pools)

Copyright National Fire Protection Association
Provided by IHS under license with NFPA
No reproduction or networking permitted without license from IHS
Not for Resale

15.5.6 Mechanical Requirements.

15.5.6.1 All reconfigured spaces intended for occupancy and all spaces converted to habitable or occupiable space in any rehabilitation work area shall be provided with either natural or mechanical ventilation.

15.5.6.1.1 Natural ventilation shall be provided by a minimum openable area to the outdoors of 4 percent of the floor area being ventilated and shall comply with the requirements of the mechanical code.

15.5.6.1.2 Newly installed mechanical ventilation systems shall comply with the requirements of the mechanical code.

15.5.6.2 In mechanically ventilated spaces, existing mechanical ventilation systems that are altered, reconfigured, or extended shall be capable of providing not less than 5 ft^3/min (0.14 m^3/min) per person of outdoor air and not less than 15 ft^3/min (0.42 m^3/min) of ventilation air per person; or not less than the amount of ventilation air determined by the Indoor Air Quality Procedure of ASHRAE 62, *Ventilation for Acceptable Indoor Air Quality*.

15.5.6.3 All newly introduced devices, equipment, or operations that produce airborne particulate matter, odors, fumes, vapor, combustion products, gaseous contaminants, pathogenic and allergenic organisms, and microbial contaminants in such quantities to adversely affect or impair health, or cause discomfort to occupants, shall be provided with an exhaust system in compliance with the mechanical code or a means of collection and removal of the contaminants. Such exhaust system shall discharge directly to an approved location at the exterior of the building.

15.5.6.4 Where the rehabilitation work area includes a commercial kitchen and the modification includes reconfiguration or extension of cooking equipment, or the installation of additional cooking equipment, existing grease ducts, exhaust equipment, and kitchen hoods shall be brought into compliance with all the requirements of the mechanical code.

15.5.7 Plumbing Requirements. Where the rehabilitation work area is more than 50 percent of the gross floor area *(see 3.3.33.8.1, Gross Floor Area)*, and the occupant load will be increased by at least 20 percent as a result of the modification, plumbing fixtures shall be provided, based on the increased occupant load in the rehabilitation work area, in quantities and locations specified in the plumbing code, based on the increased occupant load.

15.5.8 Boiler Safety Requirements. (Reserved)

15.5.9 Elevator Requirements. (Reserved)

15.6 Reconstruction.

15.6.1 General Requirements.

15.6.1.1 Reconstruction, in other than historic buildings, shall comply with the requirements of Section 15.6. *(See 3.3.507, Reconstruction.)*

15.6.1.2 Reconstruction in historic buildings shall comply with the requirements of one of the following:

(1) Section 15.6
(2) Section 15.6, as modified by Section 15.10

15.6.1.3 In addition to the requirements of Section 15.6, all work shall comply with all the requirements of Sections 15.4 and 15.5, unless otherwise provided in 15.6.1.3.1 through 15.6.1.3.3.

15.6.1.3.1 Buildings in which the reconfiguration of space affecting exits or shared egress access is exclusively the result of compliance with the accessibility requirements of 15.4.4 shall not be required to comply with Section 15.6.

15.6.1.3.2 Existing dead-end corridors shall be permitted to be extended, and new dead-end corridors shall be permitted to be added in accordance with 15.6.2.1.5.

15.6.1.3.3 Any stairway replacing an existing stairway within a space where, because of existing construction, the pitch or slope cannot be reduced, shall not be required to comply with the maximum riser height and minimum tread depth requirements of 11.2.2.2.

15.6.1.4 Wherever the term *rehabilitation work area* is used in Section 15.6, it shall include only the area affected by reconstruction work and areas covered by 15.5.1.3. Other rehabilitation work areas affected exclusively by renovation or modification work shall not be included in the rehabilitation work area required to comply with Section 15.6.

15.6.2 Nonstructural Requirements.

15.6.2.1 Means of Egress.

15.6.2.1.1 General. The means of egress shall comply with the requirements of 15.6.2.1.

15.6.2.1.2 Number of Means of Egress. Every story utilized for human occupancy on which there is a rehabilitation work area shall be provided with the minimum number of means of egress required by NFPA *101*, *Life Safety Code*, for existing occupancies.

15.6.2.1.2.1 Mezzanines. Mezzanines in the rehabilitation work area shall be provided with the minimum number of means of egress required by NFPA *101* for existing occupancies.

15.6.2.1.2.2 Buildings with a Single Means of Egress.

(A) In buildings having only one means of egress, other than one- and two-family dwellings, the single exit condition serving the rehabilitation work area shall be permitted to continue in accordance with the existing occupancy requirements of NFPA *101*.

(B) The requirement of 15.6.2.1.2.2(A) shall not apply to one- and two-family dwellings complying with the means of escape requirements in NFPA *101*.

15.6.2.1.2.3 Assembly Occupancies. Assembly occupancies shall be provided with a main entrance/exit as required by 16.2.3.3.

15.6.2.1.3* Capacity of Means of Egress.

15.6.2.1.3.1 The capacity of the means of egress in each rehabilitation work area and throughout the egress path of each rehabilitation work area shall be sufficient for the occupant load thereof, unless otherwise provided in 15.6.2.1.3.3 and 15.6.2.1.3.4.

15.6.2.1.3.2 The capacity of means of egress shall be determined in accordance with Section 11.3, unless otherwise provided in 15.6.2.1.3.4.

15.6.2.1.3.3 The authority having jurisdiction shall be permitted to establish the occupant load as the number of persons for which existing means of egress is adequate,

Copyright National Fire Protection Association
Provided by IHS under license with NFPA
No reproduction or networking permitted without license from IHS
Not for Resale

provided that measures are established to prevent occupancy by a greater number of persons.

15.6.2.1.3.4 The requirements of 15.6.2.1.3.1 and 15.6.2.1.3.2 shall not apply where the building was previously determined to have adequate egress capacity.

15.6.2.1.4 Egress Doorways.

15.6.2.1.4.1 Large Areas.

(A) In any rehabilitation work area, all rooms and spaces having an occupant load greater than 50, or in which the travel distance exceeds 75 ft (23 m), shall have a minimum of two egress doorways, unless otherwise provided in 15.6.2.1.4.1(B).

(B) The requirement of 15.6.2.1.4.1(A) shall not apply where a single means of egress is permitted by the existing occupancy requirements in NFPA *101*.

15.6.2.1.4.2 Health Care Occupancies.

(A) In health care occupancies, any patient sleeping room or suite of rooms in the rehabilitation work area greater than 1000 ft^2 (93 m^2) shall have a minimum of two egress doorways, unless otherwise provided in 15.6.2.1.4.2(B).

(B) Where the room or suite of rooms is not greater than 2500 ft^2 (232 m^2) and does not contain patient sleeping rooms, two egress doorways shall not be required.

15.6.2.1.4.3 Corridor Doors.

(A) Corridor doors in the rehabilitation work area shall meet the requirements for existing occupancies in NFPA *101*. Existing doors in buildings protected throughout with an approved automatic sprinkler system shall be required only to resist smoke, to be reasonably tight-fitting, and to have no louvers, unless otherwise provided in 15.6.2.1.4.3(B) through (D).

(B) The use of 1⅜ in. (35 mm), solid-bonded wood core doors shall be considered acceptable where 1¾ in. (44 mm), solid-bonded wood core doors are required but where the existing frames will not accommodate such a door.

(C) The requirements of 15.6.2.1.4.3(A) shall not apply to existing doors meeting the requirements for a rating of 15 minutes or better.

(D) In small residential board and care occupancies having prompt evacuation capability in accordance with Chapter 33 of NFPA *101* and that are protected with an approved automatic detection system, closing devices shall not be required.

15.6.2.1.4.4 Transoms.

(A) In all buildings of residential and residential board and care occupancies, all transoms in corridor walls in rehabilitation work areas shall be either glazed with ¼ in. (6.3 mm) wired glass set in metal frames or shall be other glazing assemblies having a fire protection rating as required for the door and permanently secured in the closed position or sealed with materials consistent with the corridor construction, unless otherwise provided in 15.6.2.1.4.4(B).

(B) The requirement of 15.6.2.1.4.4(A) shall not apply where transoms are permitted by the existing occupancy requirements of NFPA *101*.

15.6.2.1.4.5 Other Corridor Openings. In any rehabilitation work area, any sash, grille, or opening in a corridor, other than those specified in 15.6.2.1.4.3 and 15.6.2.1.4.4; and any window in a corridor not opening to the outside air shall be sealed with materials consistent with the corridor construction.

15.6.2.1.4.6 Supplemental Requirements.

(A) The requirements of 15.6.2.1.4.3 through 15.6.2.1.4.5 shall apply on the entire floor where the rehabilitation work area exceeds 50 percent of the floor area, unless otherwise provided in 15.6.2.1.4.6(B).

(B) Corridors within a tenant space that is entirely outside the rehabilitation work area shall not be required to comply with 15.6.2.1.4.6(A).

15.6.2.1.4.7 Door Swing. In the rehabilitation work area, and in the egress path from any rehabilitation work area to the exit discharge, all egress doors serving an occupant load greater than 50 shall swing in the direction of egress travel.

15.6.2.1.4.8 Door Closers.

(A) In any rehabilitation work area, all doors opening onto an exit passageway at grade or onto an exit stair shall be self-closing or automatic-closing by listed closing devices, unless otherwise provided in 15.6.2.1.4.8(B).

(B) The requirement of 15.6.2.1.4.8(A) shall not apply where exit enclosure is not required by the fire code.

15.6.2.1.4.9 Panic or Fire Exit Hardware. In any rehabilitation work area, and in the egress path from any rehabilitation work area to the exit discharge, located in a building or portion thereof of an assembly or educational occupancy with an occupant load greater than 100, all required egress doors equipped with latching devices shall be equipped with approved panic hardware or fire exit hardware.

15.6.2.1.4.10 Supplemental Requirements.

(A) The requirements of 15.6.2.1.4.7 through 15.6.2.1.4.9 shall apply on the entire floor where the rehabilitation work area exceeds 50 percent of the floor area, unless otherwise provided in 15.6.2.1.4.10(B).

(B) Means of egress within a tenant space that is entirely outside the rehabilitation work area shall not be required to comply with 15.6.2.1.4.10(A).

15.6.2.1.4.11 Detention and Correctional Occupancies. Rehabilitation work areas in detention and correctional occupancies having remote power-unlocking capability for more than 10 locks shall be provided with an emergency power source for such locks as required for existing occupancies in NFPA *101*.

15.6.2.1.5 Dead-End Corridors. Dead end corridors shall comply with one of the following provisions, unless otherwise provided in 15.6.2.1.5.1 through 15.6.2.1.5.4:

(1) Existing dead-end corridors in any rehabilitation work area shall not exceed 35 ft (11 m).
(2) Newly constructed dead-end corridors shall comply with other sections of this *Code*.

15.6.2.1.5.1 The requirement of 15.6.2.1.5 shall not apply where dead-end corridors of greater length are permitted by the existing occupancy requirements of NFPA *101*.

15.6.2.1.5.2 In other than assembly occupancies and areas containing high hazard contents exceeding the maximum allowable quantities per control area as set forth in 34.1.3, the maximum length of an existing dead-end corridor shall be 50 ft (15 m) in buildings equipped throughout with an approved, complete automatic fire alarm system.

Copyright National Fire Protection Association
Provided by IHS under license with NFPA
No reproduction or networking permitted without license from IHS
Not for Resale

15.6.2.1.5.3 In other than assembly occupancies and areas containing high hazard contents exceeding the maximum allowable quantities per control area as set forth in 34.1.3, the maximum length of an existing dead-end corridor shall be 70 ft (21 m) in buildings equipped throughout with an approved automatic sprinkler system.

15.6.2.1.5.4 In other than assembly occupancies and areas containing high hazard contents exceeding the maximum allowable quantities per control area as set forth in 34.1.3, the maximum length of a newly constructed or extended dead-end corridor shall not exceed 50 ft (15 m) in buildings equipped throughout with an approved automatic sprinkler system.

15.6.2.1.6 Means of Egress Lighting.

15.6.2.1.6.1 General. Means of egress in all rehabilitation work areas shall be provided with artificial lighting in accordance with the requirements of other sections of this *Code*.

15.6.2.1.6.2 Supplemental Requirements.

(A) Where the reconstruction rehabilitation work area on any floor exceeds 50 percent of that floor area, means of egress throughout the floor shall be provided with artificial lighting in accordance with the requirements of other sections of this *Code*, unless otherwise provided in 15.6.2.1.6.2(C).

(B) In a building with rehabilitation work areas involving over 50 percent of the aggregate floor area within the building, the means of egress within the rehabilitation work area and the means of egress, including the exit and exit discharge paths, serving the rehabilitation work area shall be provided with artificial lighting in accordance with the requirements of other sections of this *Code*, unless otherwise provided in 15.6.2.1.6.2(C).

(C) Means of egress within a tenant space that is entirely outside the rehabilitation work area shall not be required to comply with 15.6.2.1.6.2(A) and (B).

15.6.2.1.7 Exit Signs.

15.6.2.1.7.1 Means of Egress. Means of egress in all rehabilitation work areas shall be provided with exit signs in accordance with the requirements of other sections of this *Code*.

15.6.2.1.7.2 Supplemental Requirements.

(A) Where the reconstruction rehabilitation work area on any floor exceeds 50 percent of that floor area, means of egress throughout the floor shall be provided with exit signs in accordance with the requirements of other sections of this *Code*, unless otherwise provided in 15.6.2.1.7.2(C).

(B) In a building with rehabilitation work areas involving over 50 percent of the aggregate floor area within the building, means of egress from the floor of the highest rehabilitation work area to the floor of exit discharge shall be provided with exit signs in accordance with the requirements of other sections of this *Code*, unless otherwise provided in 15.6.2.1.7.2(C).

(C) Means of egress within a tenant space that is entirely outside the rehabilitation work area shall not be required to comply with 15.6.2.1.7.2(A) and (B).

15.6.2.1.8 Handrails. The requirements of 15.6.2.1.8.1 and 15.6.2.1.8.2 shall apply from the highest rehabilitation work area floor to the level of exit discharge.

15.6.2.1.8.1 Every required exit stairway that is part of the means of egress for any rehabilitation work area that has three or more risers and is not provided with at least one handrail, or in which the existing handrails are judged to be in danger of collapsing, shall be provided with handrails for the full length of the run of steps on at least one side. All exit stairways with a required egress width of more than 66 in. (1675 mm) shall have handrails on both sides.

15.6.2.1.8.2 Where there are no handrails, or where the existing handrails must be replaced in accordance with 15.6.2.1.8.1, the handrails shall be designed and installed in accordance with the requirements for new construction.

15.6.2.1.9 Guards. The requirements of 15.6.2.1.9.1 and 15.6.2.1.9.2 shall apply from the highest rehabilitation work area floor to the level of exit discharge, but shall be confined to the egress path of any rehabilitation work area.

15.6.2.1.9.1 Every open portion of a stair, landing, or balcony that is more than 30 in. (760 mm) above the floor or grade below and not provided with guards, or those in which the existing guards are judged to be in danger of collapsing, shall be provided with guards.

15.6.2.1.9.2 Where there are no guards, or where the existing guards must be replaced in accordance with 15.6.2.1.9.1, the guards shall be designed and installed in accordance with the requirements for new construction.

15.6.2.2 Interior Finish.

15.6.2.2.1 Interior Wall and Ceiling Finish. The interior finish of walls and ceilings in any rehabilitation work area shall comply with the requirements for existing occupancies in NFPA *101*. All existing interior finish materials that do not comply with the requirements of Section 15.6 shall be removed or shall be treated with an approved fire-retardant coating in accordance with the manufacturer's instructions to secure compliance with the requirements of 15.6.2.2.

15.6.2.2.2 Supplemental Requirements.

15.6.2.2.2.1 Interior Finish in Exits and Corridors.

(A) Where the rehabilitation work area on any floor exceeds 50 percent of that floor area, the requirements of 15.6.2.2.1 shall apply to the interior finish in exits and corridors serving the rehabilitation work area on the entire floor, unless otherwise provided in 15.6.2.2.2.1(B).

(B) Interior finish within a tenant space that is entirely outside the rehabilitation work area shall not be required to comply with 15.6.2.2.2.1(A).

15.6.2.2.2.2 Extent of Interior Finish in Exits. In a building with rehabilitation work areas involving over 50 percent of the aggregate floor area within the building, the requirements for interior finishes in exits shall apply from the floor of the highest rehabilitation work area to the floor of exit discharge.

15.6.2.3 Shaft Enclosures.

15.6.2.3.1 New Vertical Openings. In any rehabilitation work area, newly constructed vertical openings connecting two or more floors shall comply with the requirements for new construction.

15.6.2.3.2 Existing Vertical Openings. In any rehabilitation work area, all existing interior vertical openings connecting two or more floors shall be enclosed as required for existing occupancies in NFPA *101*.

Copyright National Fire Protection Association
Provided by IHS under license with NFPA
No reproduction or networking permitted without license from IHS
Not for Resale

15.6.2.3.3 Supplemental Requirements.

15.6.2.3.3.1 Where the reconstruction rehabilitation work area on any floor exceeds 50 percent of that floor area, 15.6.2.3.2 shall apply throughout the floor.

15.6.2.3.3.2 Where the reconstruction rehabilitation work area on any floor exceeds 50 percent of that floor area, stairways that are part of the means of egress serving the rehabilitation work area shall be enclosed with smoke-tight enclosures on all floors below the highest rehabilitation work area floor, unless otherwise provided in 15.6.2.3.3.3.

15.6.2.3.3.3 The requirement of 15.6.2.3.3.2 shall not apply where the stairway enclosure is not required for existing occupancies in NFPA *101*.

15.6.2.3.3.4 In a building with rehabilitation work areas involving over 50 percent of the aggregate floor area within the building, stairways that are part of the means of egress shall be enclosed in accordance with 15.6.2.3.3.2 on the highest rehabilitation work area floor and on all floors below.

15.6.2.4 Fire Barriers and Smoke Barriers.

15.6.2.4.1 Health Care Occupancies. Where the rehabilitation work area is on a story used for sleeping purposes for more than 30 patients, the story shall be divided into not less than two compartments by smoke barriers as required for existing health care occupancies in NFPA *101*.

15.6.2.4.2 Small Residential Board and Care Occupancies and One- and Two-Family Dwellings.

15.6.2.4.2.1 Where the rehabilitation work area is in any attached dwelling unit in small residential board and care occupancies and one- and two-family dwellings, walls separating the dwelling units that are not continuous from the foundation to the underside of the roof sheathing shall be constructed to provide a continuous fire separation using construction materials consistent with the existing wall or complying with the requirements for new structures, unless otherwise provided in 15.6.2.4.2.3.

15.6.2.4.2.2 All work shall be performed on the side of the wall of the dwelling unit that is part of the rehabilitation work area.

15.6.2.4.2.3 Walls shall not be required to be continuous through concealed floor spaces.

15.6.2.5 Automatic Sprinkler Systems.

15.6.2.5.1 General.

15.6.2.5.1.1 All rehabilitation work areas in any building or portion thereof that is required to be sprinklered in accordance with the provisions of NFPA *101* for existing buildings shall be provided with an automatic sprinkler system, unless otherwise provided in 15.6.2.5.1.2.

15.6.2.5.1.2 In other than high-rise structures, where an adequate water supply for sprinkler protection is not available, the authority having jurisdiction shall be permitted to accept alternative protection. For purposes of this alternative, "adequate water supply" shall mean that the water supply available at the site has sufficient flow capability at a residual pressure of 20 psi (138,000 Pa) to meet the sprinkler system demand criteria.

15.6.2.5.2 Supplemental Requirements.

15.6.2.5.2.1 Sprinklers for Rehabilitation Exceeding 50 Percent of Floor Area.

(A) Where the rehabilitation work area on any floor exceeds 50 percent of that floor area, the requirement of 15.6.2.5.1 shall apply to the entire floor, unless otherwise provided in 15.6.2.5.2.1(B).

(B) In other than high-rise structures, where an adequate water supply for sprinkler protection is not available, the authority having jurisdiction shall be permitted to accept alternative protection. For purposes of this alternative, "adequate water supply" shall mean that the water supply available at the site has sufficient flow capability at a residual pressure of 20 psi (138,000 Pa) to meet the sprinkler system demand criteria.

15.6.2.5.2.2 Sprinklers for Rehabilitation Exceeding 50 Percent of Building Area.

(A) In a building with rehabilitation work areas involving over 50 percent of the aggregate building area, automatic sprinkler systems shall be provided in accordance with requirements for new construction.

(B) The requirement of 15.6.2.5.2.2(A) shall apply to the highest floor containing a rehabilitation work area and all floors below, unless otherwise provided in 15.6.2.5.2.2(C) and (D).

(C) In other than high-rise structures, where an adequate water supply for sprinkler protection is not available, the authority having jurisdiction shall be permitted to accept alternative protection. For purposes of this alternative, "adequate water supply" shall mean that the water supply available at the site has sufficient flow capability at a residual pressure of 20 psi (138,000 Pa) to meet the sprinkler system demand criteria.

(D) The requirement of 15.6.2.5.2.2(A) shall not apply to residential occupancies less than four stories in height and with not more than four units per floor.

15.6.2.5.2.3 Health Care Occupancies. In health care occupancies, the smoke compartment where the rehabilitation work, or work per 15.5.1.3.5, is being done, shall be protected by automatic sprinklers in accordance with 19.1.1.4.3.

15.6.2.5.3 Multiple Uses. In buildings containing multiple uses, one or more of which require automatic sprinkler protection in accordance with 15.6.2.5.1 or 15.6.2.5.2, automatic sprinklers shall not be required throughout the building, provided that the occupancies requiring automatic sprinklers are separated from those not requiring automatic sprinklers by fire-resistive construction as follows:

(1) Minimum 2-hour rating for areas containing high hazard contents exceeding the maximum allowable quantities per control area as set forth in 34.1.3, other than high hazard Level 4
(2) Minimum 1-hour rating for all other conditions

15.6.2.5.4 Supervision. Automatic sprinkler systems required by 15.6.2.5 shall be electrically supervised by one of the following methods in accordance with *NFPA 72, National Fire Alarm Code*, unless otherwise provided in 15.6.2.5.4.1 through 15.6.2.5.4.7:

(1) Approved central station system
(2) Approved proprietary system
(3) Approved remote-station system of the jurisdiction
(4) Approved local alarm service that will cause the sounding of an alarm

15.6.2.5.4.1 The requirement of 15.6.2.5.4 shall not apply to an underground gate valve with roadway boxes.

Copyright National Fire Protection Association
Provided by IHS under license with NFPA
No reproduction or networking permitted without license from IHS
Not for Resale

15.6.2.5.4.2 The requirement of 15.6.2.5.4 shall not apply to halogenated extinguishing systems.

15.6.2.5.4.3 The requirement of 15.6.2.5.4 shall not apply to carbon dioxide extinguishing systems.

15.6.2.5.4.4 The requirement of 15.6.2.5.4 shall not apply to dry and wet chemical extinguishing systems.

15.6.2.5.4.5 The requirement of 15.6.2.5.4 shall not apply to limited-area sprinkler systems.

15.6.2.5.4.6 The requirement of 15.6.2.5.4 shall not apply to residential occupancies complying with NFPA 13R, *Standard for the Installation of Sprinkler Systems in Residential Occupancies up to and Including Four Stories in Height*, or NFPA 13D, *Standard for the Installation of Sprinkler Systems in One- and Two-Family Dwellings and Manufactured Homes*, as appropriate.

15.6.2.5.4.7 The requirement of 15.6.2.5.4 shall not apply where supervision is not required for existing occupancies in NFPA *101*.

15.6.2.5.5 Standpipes.

15.6.2.5.5.1 Any rehabilitation work areas in a building that is required to be provided with a standpipe system by other sections of this *Code* shall be provided with standpipes up to and including the highest rehabilitation work area floor, unless otherwise provided in 15.6.2.5.5.3 and 15.6.2.5.5.4.

15.6.2.5.5.2 The standpipes required by 15.6.2.5.5.1 shall be located and installed in accordance with NFPA 14, *Standard for the Installation of Standpipe and Hose Systems*.

15.6.2.5.5.3 No pump shall be required, provided that the standpipes are capable of accepting delivery by fire department apparatus of a minimum of 250 gpm at 65 psi (0.9 m^3/min at 448,000 Pa) to the topmost floor in buildings equipped throughout with an automatic sprinkler system, or a minimum of 500 gpm at 65 psi (1.9 m^3/min at 448,000 Pa) to the topmost floor in all other buildings. Where the standpipe terminates below the topmost floor, the standpipe shall be designed to meet these flow/pressure requirements for possible future extension of the standpipe.

15.6.2.5.5.4 In other than high-rise buildings, the required interconnection of the standpipes for a wet system shall be permitted at the lowest level of the rehabilitation work area.

15.6.2.5.6 Elevator Recall. Where sprinklers are installed in an elevator hoistway or elevator machine room as part of the rehabilitation work, the elevators shall be provided with a means to disconnect power to the affected elevator(s) in compliance with ASME A17.1.

15.6.2.6 Fire Alarm Systems.

15.6.2.6.1 Smoke Alarms.

15.6.2.6.1.1 Hotels, Dormitories, and Apartments. In hotels and dormitories and apartment occupancies, individual guest rooms and individual dwelling units in any rehabilitation work area shall be provided with smoke alarms complying with the requirements for new construction.

15.6.2.6.1.2 Residential Board and Care and Dwellings.

(A) Where the reconstruction rehabilitation work area is in residential board and care occupancies and one- and two-family dwellings, smoke alarms complying with the requirements for new construction shall be provided in accordance with 55.2.2.6, unless otherwise provided in 15.6.2.6.1.2(B) and (C).

(B) Interconnection of smoke alarms shall not be required outside of the rehabilitation work area.

(C) Battery-powered single-station smoke alarms listed in accordance with UL 217, *Standard for Single and Multiple Station Smoke Alarms*, shall be permitted outside the rehabilitation work area.

15.6.2.6.2 Manual Fire Alarm Systems.

15.6.2.6.2.1 Where the rehabilitation work area on any floor exceeds 50 percent of that floor area, and the rehabilitation work area is in a building that is required to have a manual fire alarm system in accordance with the existing occupancy requirements of NFPA *101*, a manual fire alarm system shall be provided on the floor. Alarm notification appliances shall be provided on the floor and shall be automatically activated by all new and existing initiating devices as required in NFPA *101*.

15.6.2.6.2.2 Where the rehabilitation work area involves over 50 percent of the aggregate building area, and the rehabilitation work area is in a building that is required to have a manual fire alarm system in accordance with other provisions of this *Code*, a manual fire alarm system shall be provided throughout the building.

15.6.2.6.3 Automatic Fire Detection Systems.

15.6.2.6.3.1 General.

(A) Where the rehabilitation work area is in a building that is required to have an automatic fire detection system in accordance with the existing occupancy requirements of NFPA *101*, an automatic fire detection system shall be installed in the rehabilitation work area.

(B) Existing alarm notification appliances shall be automatically activated throughout the building, unless otherwise provided in 15.6.2.6.3.1(D).

(C) Where the building is not equipped with a fire alarm system, alarm notification appliances within the rehabilitation work area shall be provided and automatically activated, unless otherwise provided in 15.6.2.6.3.1(D).

(D) Where selective notification is permitted, alarm-indicating appliances shall be automatically activated in the areas selected.

15.6.2.6.3.2 Automatic Fire Detection for Rehabilitation Exceeding 50 Percent of Floor Area.

(A) Where the rehabilitation work area on any floor exceeds 50 percent of that floor area, and the rehabilitation work area is in a building that is required to have an automatic fire detection system in accordance with the existing occupancy requirements of NFPA *101*, an automatic fire detection system shall be installed throughout the floor.

(B) Alarm-indicating appliances shall be automatically activated throughout the building, unless otherwise provided in 15.6.2.6.3.2(D).

(C) Where the building is not equipped with a fire alarm system, alarm-indicating appliances on the floor shall be provided and automatically activated, unless otherwise provided in 15.6.2.6.3.2(D).

(D) Where selective notification is permitted, alarm-indicating appliances shall be automatically activated in the areas selected.

Copyright National Fire Protection Association
Provided by IHS under license with NFPA
No reproduction or networking permitted without license from IHS
Not for Resale

15.6.2.6.3.3 Automatic Fire Detection for Rehabilitation Exceeding 50 Percent of Building Area. Where the rehabilitation work area involves over 50 percent of the aggregate building area, and the building is required to have an automatic fire detection system in accordance with other provisions of this *Code*, an automatic fire detection system shall be provided throughout the building.

15.6.2.7 High-Rise Buildings. Any building or structure having one or more floors more than 75 ft (23 m) above the lowest level accessible to a fire department vehicle shall comply with the requirements of 15.6.2.7.1 through 15.6.2.7.3.

15.6.2.7.1 Recirculating Air or Exhaust Systems. Where the rehabilitation work area is located on a floor that is served by a recirculating air or exhaust system serving more than one floor, the recirculating air or exhaust system that serves the rehabilitation work area shall be equipped with approved smoke- and heat-detection devices installed in accordance with the mechanical code. The devices shall stop the fans automatically and shall be of the manual reset type. Automatic fan shutdown is not required where the system is part of an approved smoke removal or smoke control system.

15.6.2.7.2 Elevators. Where the rehabilitation work area is located on one entire floor, or where the rehabilitation work area is 20 percent or more of the occupied floor area of the building, the elevators in the buildings shall be equipped with fire fighters emergency operation in compliance with ASME A17.1.

15.6.2.7.3 Smoke Barriers. Where the rehabilitation work area on any floor exceeds 50 percent of that floor area and is located on a floor that is above the main floor level in hotel and dormitory occupancies and apartment occupancies, smoke barriers conforming to the requirements for existing occupancies in NFPA *101* shall be provided.

15.6.2.8 Boiler/Furnace Equipment Rooms.

15.6.2.8.1 Boiler/furnace equipment rooms shall be enclosed by 1-hour fire-rated construction where the rehabilitation work area is in a day-care occupancy or residential occupancy, unless otherwise provided in 15.6.2.8.1.1 through 15.6.2.8.1.4.

15.6.2.8.1.1 The requirement of 15.6.2.8.1 shall not apply to one- and two-family dwellings.

15.6.2.8.1.2 The requirement of 15.6.2.8.1 shall not apply to furnace and boiler equipment of the low-pressure type [operating at gauge pressures of 15 psi (103 kPa) or less for steam equipment or 160 psi (1100 kPa) or less for hot water equipment] where installed in accordance with manufacturer recommendations, or furnace and boiler equipment of the residential type [200,000 Btu/hr (210 MJ/hr) input rating or less] shall not be required to be enclosed.

15.6.2.8.1.3 The requirement of 15.6.2.8.1 shall not apply to furnace rooms protected with automatic sprinkler protection.

15.6.2.8.1.4 The requirement of 15.6.2.8.1 shall not apply to boiler/furnace equipment rooms protected in accordance with the mechanical code.

15.6.2.8.2 Emergency controls shall be provided in all structures classified as a day-care occupancy or residential board and care occupancy in accordance with the following:

(1) Emergency shutoff switches for furnaces and boilers in basements shall be at the top of the stairs leading to the basement.
(2) Emergency shutoff switches for furnaces and boilers in other enclosed rooms shall be located outside of the room.

15.6.2.9 Transportation of Hazardous Production Materials. Hazardous production materials shall be permitted to be transported through exit access corridors in accordance with 34.3.7.1.2.

15.6.3 Structural Requirements. (Reserved)

15.6.4 Accessibility Requirements. (Reserved)

15.6.5 Electrical Requirements. (Reserved)

15.6.6 Mechanical Requirements. (Reserved)

15.6.7 Plumbing Requirements. (Reserved)

15.6.8 Boiler Safety Requirements. (Reserved)

15.6.9 Elevator Requirements. (Reserved)

15.7 Change of Use and Change of Occupancy Classification.

15.7.1 General Requirements.

15.7.1.1 Applicable Requirements. Any repair, renovation, modification, or reconstruction work undertaken in connection with a change of use that does not involve a change of occupancy classification shall conform to the requirements of Sections 15.3, 15.4, 15.5, and 15.6, respectively, for the applicable occupancy classification, and with 15.7.2.

15.7.1.2 Change of Occupancy. The occupancy classification of an existing building or structure shall be permitted to be changed, provided that the building or structure meets all the requirements of Section 15.6, applied throughout the building for the new occupancy classification, and the requirements of 15.7.2 and 15.7.3, unless otherwise provided in 15.7.1.2.1 and 15.7.1.2.2.

15.7.1.2.1 Compliance with all the provisions of Section 15.6 shall not be required where the change of use complies with the requirements of 15.7.3.4.

15.7.1.2.2 Change of occupancy classification in historic buildings shall comply with the requirements of one of the following:

(1) 15.7.1.2
(2) 15.7.1.2, as modified by Section 15.10

15.7.2 Change of Use.

15.7.2.1 Special Use and Occupancy.

15.7.2.1.1 Where the use of an existing building or part of an existing building is changed to one of the following special use or occupancy categories, as defined in another chapter of this *Code*, the building shall comply with all the applicable requirements of that chapter, regardless of whether a change of occupancy classification is involved:

(1) Mall buildings
(2) Atriums
(3) Private garages
(4) Parking garages
(5) Hazardous areas
(6) Motion picture projection rooms
(7) Stages and platforms
(8) Special amusement buildings
(9) Semiconductor facilities

--`,,```,,,,````-`-`,,`,,`,`,,`---
Copyright National Fire Protection Association
Provided by IHS under license with NFPA
No reproduction or networking permitted without license from IHS
Not for Resale

15.7.2.1.2 An underground structure *(see 3.3.601.16, Underground Structure)* in which there is a change of occupancy shall comply with the requirements of Section 31.2 applicable to underground structures.

15.7.2.2 Structural Requirements.

15.7.2.2.1 Live Loads.

15.7.2.2.1.1 Any existing structure in which the proposed new use requires floor live loads equal to or less than those required for the existing use shall be permitted to be continued in use for the originally approved live loads, provided that the structure is not dangerous and is adequate for the proposed use, unless otherwise provided in 15.7.2.2.1.4.

15.7.2.2.1.2 If the approved floor live load is less than required by Section 35.6, the areas designed for the reduced live load shall be posted with the approved load or shall be structurally strengthened to support the new load, unless otherwise provided in 15.7.2.2.1.4.

15.7.2.2.1.3 Placards required by 15.7.2.2.1.2 shall be of an approved design.

15.7.2.2.1.4 Analysis and test methods for evaluation of existing materials shall be permitted to use the methods specified in the code under which the building was constructed, the current code, or other standards as approved by the authority having jurisdiction.

15.7.2.2.2 Vertical Loads on Roofs.

15.7.2.2.2.1 Buildings and structures shall comply with the roof load requirements of Section 35.7 for roof live load, unless otherwise provided in 15.7.2.2.2.2.

15.7.2.2.2.2 Existing roofs shall be permitted to be retained, provided that any unsafe or overloaded conditions are corrected and where the roof dead load is not increased by use, reroofing, or added equipment.

15.7.2.2.3* Wind and Snow Loads. Where a change of use results in an existing building being assigned a higher occupancy category as defined in Table 35.3.1, the building or affected portion shall be strengthened to meet the snow load or wind load requirements of Sections 35.8 and 35.9.

15.7.2.2.4 Seismic Loads.

15.7.2.2.4.1 Where a change of use results in an existing building being reclassified to a higher occupancy category, other than Occupancy Category I, as shown in Table 35.3.1, the building shall be strengthened to meet the seismic requirements of Section 35.10, unless otherwise provided in 15.7.2.2.4.2.

15.7.2.2.4.2 For buildings having a design spectral response acceleration parameter at short periods (S_{DS}) of less than 0.33, strengthening the building to meet the seismic requirements for new buildings shall be required only where the change of use results in a building being reclassified to Risk Category IV (highest). All other buildings so located shall not be required to be strengthened.

15.7.2.3 Accessibility. Compliance with the accessibility provisions of Chapter 12 shall apply only where renovation, modification, or reconstruction work occurs.

15.7.2.4 Electrical Requirements.

15.7.2.4.1 Where the use of an existing building or part of an existing building is changed to one of the following special uses as described in Chapter 5 of NFPA 70, the electrical wiring and equipment of the building or portion thereof that contains the proposed use shall comply with all applicable requirements of NFPA 70, regardless of whether a change of occupancy classification is involved:

(1) Hazardous (classified) locations
(2) Commercial garages used for repair and storage
(3) Aircraft hangars
(4) Motor fuel dispensing facilities and repair garages
(5) Bulk storage plants
(6) Spray application, dipping, and coating processes
(7) Health care facilities
(8) Places of assembly
(9) Theaters, audience areas of motion picture and television studios, and similar locations
(10) Motion picture and television studios and similar locations
(11) Motion picture projectors
(12) Agricultural buildings

15.7.2.4.2 Where the use of an existing building or part of an existing building is changed, all unsafe conditions, as determined by the authority having jurisdiction, shall be corrected without requiring that all parts of the electrical system be brought into compliance with NFPA 70.

15.7.2.5 Mechanical Requirements. Where the use of an existing building or part of an existing building is changed such that the new use is subject to different kitchen exhaust requirements or to increased mechanical ventilation requirements in accordance with the mechanical code, compliance with the intent of the respective mechanical code provisions shall be required.

15.7.2.6 Plumbing Requirements.

15.7.2.6.1 Where the use of an existing building or part of an existing building is changed such that the new use is subject to increased or different plumbing fixture requirements in accordance with the plumbing code, or to increased water supply requirements in accordance with the plumbing code, compliance with the respective plumbing code provisions shall be required.

15.7.2.6.2 If the new use is a food-handling establishment, all existing sanitary waste lines above the food or drink preparation, storage, display, or serving areas shall be panned or otherwise protected to prevent leaking pipes or condensation on pipes from contaminating food or drink. New drainage lines shall not be installed above such areas or shall be protected in accordance with the plumbing code.

15.7.2.6.3 If the new use will produce grease or oil-laden wastes, interceptors as required in the plumbing code shall be provided.

15.7.2.6.4 If the new use will produce chemical wastes, the following shall apply:

(1) If the existing piping is not compatible with the chemical waste, the waste shall be neutralized prior to entering the drainage system, or the piping shall be changed to a compatible material.
(2) No chemical waste shall discharge to a public sewer system without the approval of the sewage authority.

15.7.2.7 Health and Hygiene—Light and Ventilation. Lighting and ventilation shall comply with the requirements of Chapter 49 for the new use.

Copyright National Fire Protection Association
Provided by IHS under license with NFPA
No reproduction or networking permitted without license from IHS
Not for Resale

15.7.3 Change of Occupancy Classification.

15.7.3.1 Certificate of Occupancy. Every change of occupancy classification shall require a new certificate of occupancy, regardless of whether any renovations, modifications, or reconstruction work is required by this *Code*.

15.7.3.2 Part Change of Occupancy Classification.

15.7.3.2.1 Where a portion of an existing building is changed to a new occupancy classification, and that portion is not separated from the remainder of the building with fire barrier walls or horizontal assemblies, or both, having a fire-resistance rating as required in Table 6.2.4.1(a) or Table 6.2.4.1(b) for the separate occupancy classification, or with approved compliance alternatives, the entire building shall comply with all the requirements of Section 15.6, applied throughout the building for the new occupancy classification, and with the requirements of Section 15.7, unless otherwise provided in 15.7.3.2.3.

15.7.3.2.2 Where a portion of an existing building is changed to a new occupancy classification, and that portion is separated from the remainder of the building with fire barrier walls or horizontal assemblies, or both, having a fire resistance rating as required in Table 6.2.4.1(a) or Table 6.2.4.1(b) for the separate occupancy classification, or with approved compliance alternatives, the portion changed shall comply with all the requirements of Section 15.6 for the new occupancy classification and the requirements of Section 15.7, unless otherwise provided in 15.7.3.2.3.

15.7.3.2.3 Compliance with all the provisions of Section 15.6 shall not be required where the change of occupancy classification complies with the requirements of 15.7.3.4.

15.7.3.3 Risk Category Classifications. The relative degree of hazard between different occupancy classifications shall be as set forth in the risk category classifications in Table 15.7.3.5.1.1, Table 15.7.3.8.1.1, and Table 15.7.3.9.1.1.

15.7.3.3.1 An existing building or portion thereof shall be permitted to have its use changed to an occupancy classification within the same hazard classification category or to an occupancy classification in a lesser hazard classification category (higher number) in all three risk category classifications designated in Table 15.7.3.5.1.1, Table 15.7.3.8.1.1, and Table 15.7.3.9.1.1, provided that the building complies with the provisions of Section 15.6 for the new occupancy classification, applied throughout the building or portion thereof, in accordance with 15.7.3.3.3, 15.7.2.2.1 (live loads), 15.7.2.2.2 (vertical loads on roofs), and 15.7.2.7 (health and hygiene), unless otherwise provided in 15.7.3.3.2.

15.7.3.3.2 Compliance with all the provisions of Section 15.6 shall not be required where the change of occupancy classification complies with the requirements of 15.7.3.4.

15.7.3.3.3 An existing building shall comply with all the applicable requirements of Section 15.7 where a change in occupancy classification will place it in a higher risk category or when the use contains high hazard contents exceeding the maximum allowable quantities per control area as set forth in 34.1.3.

15.7.3.3.4 An existing building shall be permitted to have its occupancy classification changed to a higher hazard rating (lower number) in all three risk category classifications designated in Table 15.7.3.5.1.1, Table 15.7.3.8.1.1, and Table 15.7.3.9.1.1, provided that the building complies with Section 15.7 or with the requirements of this *Code* for new construction.

15.7.3.4 Change of Occupancy Classification to an Equal or Lesser Hazard. A change of use to an occupancy classification within the same hazard classification category or to an occupancy classification in a lesser hazard classification category (higher number) in the three risk category classifications addressed by Table 15.7.3.5.1.1, Table 15.7.3.8.1.1, and Table 15.7.3.9.1.1 shall be permitted in an existing building or portion thereof, provided that the provisions of Section 15.7 are met.

15.7.3.4.1 Regardless of the occupancy classification involved, the following requirements shall be met throughout the building:

(1) The capacity of the means of egress shall comply with 15.6.2.1.3.
(2) The interior finish of walls and ceilings shall comply with the requirements of 15.6.2.2.
(3) The high-rise building requirements of 15.6.2.7 shall apply.
(4) The boiler/furnace room requirements of 15.6.2.8 shall apply.

15.7.3.4.2 Where the new occupancy classification is classified as a residential occupancy or residential board and care occupancy, the following requirements shall be met throughout the building:

(1) Corridor doors and transoms shall comply with the requirements of 15.6.2.1.4.3 and 15.6.2.1.4.4.
(2) Fire alarm systems shall comply with the requirements of 15.6.2.6.

15.7.3.4.3 Where the new occupancy classification is classified as a health care occupancy, the following requirements shall be met throughout the building:

(1) Egress doorways from patient sleeping rooms and suites of rooms shall comply with the requirements of 15.6.2.1.4.2.
(2) Shaft enclosures shall comply with the requirements of 15.6.2.3.
(3) Smoke barriers shall comply with the requirements of 15.6.2.4.1.
(4) Fire alarm systems shall comply with the requirements of 15.6.2.6.

15.7.3.4.4 Where the new occupancy classification is classified as a detention and correctional occupancy, the following requirements shall be met throughout the building:

(1) Locking of egress doors shall comply with the requirements of 15.6.2.1.4.11.
(2) Shaft enclosures shall comply with the requirements of 15.6.2.3.
(3) Fire alarm systems shall comply with the requirements of 15.6.2.6.

15.7.3.4.5 Where the new occupancy classification is classified as a one- and two-family dwelling, the following requirements shall be met:

(1) Dwelling unit separation shall comply with the requirements of 15.6.2.4.2.
(2) The smoke alarm requirements of 15.6.2.6.1 shall be met.

15.7.3.4.6 Where a change of occupancy classification includes a commercial kitchen, existing grease ducts, exhaust equipment, and kitchen hoods shall be brought into compliance with all the requirements of the mechanical code.

--`,,```,,,,````-`-`,,`,,`,`,,`---
Copyright National Fire Protection Association
Provided by IHS under license with NFPA
No reproduction or networking permitted without license from IHS
Not for Resale

15.7.3.5 Fire and Life Safety.

15.7.3.5.1 Means of Egress/General.

15.7.3.5.1.1 Occupancy Change to Higher Risk Category. Where a change of occupancy classification occurs, the life safety and exits risk category shall be determined in accordance with Table 15.7.3.5.1.1. Where a change of occupancy classification results in a higher risk category (lower number), egress capacity, arrangement of the means of egress, and all elements of the means of egress including, but not limited to, the exit access, exit discharge, occupant load, corridors, doors, enclosures, stairs and ramps, guards and handrails, means of egress doorways, fire escapes, and exit lighting and signs shall comply with the applicable requirements for new construction, and the following provisions also shall apply:

(1) Stairways shall be enclosed in compliance with applicable portions of 15.7.3.6.
(2) Existing stairways, including handrails and guards complying with the requirements of Section 15.6, shall be permitted for continued use subject to approval of the authority having jurisdiction.
(3) Any stairway replacing an existing stairway within a space where, because of existing construction, the pitch or slope cannot be reduced shall not be required to comply with the maximum riser height and minimum tread depth requirements.
(4) Existing corridor walls constructed of wood lath and plaster in good condition or ½ in. (13 mm) thick gypsum wallboard shall be permitted.
(5) Existing corridor doorways, transoms, and other corridor openings shall comply with the requirements in 15.6.2.1.4.3, 15.6.2.1.4.4, and 15.6.2.1.4.5.
(6) Existing dead-end corridors shall comply with the requirements in 15.6.2.1.5.
(7) An existing operable window with a clear opening area of not less than 5 ft^2 (0.46 m^2), and with a minimum opening height and width of 22 in. (560 mm) and 20 in. (510 mm), respectively, shall be accepted as an egress window.
(8) In a change of occupancy classification from an existing residential or health care occupancy to a residential board and care occupancy, 28 in. (710 mm) doors shall be permitted.
(9) In a change of occupancy classification from an existing residential or health care occupancy to a residential board and care occupancy, winders complying with 11.2.2.2.4 shall be permitted.

15.7.3.5.1.2 Occupancy Change to Equal or Lesser Risk Category.

(A) Where a change of occupancy classification is to an equal or lesser risk category in accordance with Table 15.7.3.5.1.1, existing elements of the means of egress shall comply with the requirements of 15.6.2.1 for the new occupancy classification, unless otherwise provided in 15.7.3.5.1.2(C) and (D).

(B) Newly constructed or configured means of egress shall comply with the applicable requirements for new construction, unless otherwise provided in 15.7.3.5.1.2(C) and (D).

(C) Any stairway replacing an existing stairway within a space where, because of existing construction, the pitch or slope cannot be reduced shall not be required to comply with the maximum riser height and minimum tread depth requirements of 11.2.2.2.

Table 15.7.3.5.1.1 Hazard Categories and Classifications — Life Safety and Exits

Relative Hazard	Occupancy Classification
1 (highest hazard)	High hazard contents exceeding the maximum allowable quantities per control area, as set forth in 34.1.3
2	Health care, detention and correctional, residential board and care
3	Assembly, educational, day care, ambulatory health care, residential, mercantile, business, industrial, storage
4 (lowest hazard)	Industrial and storage occupancies with low hazard contents

(D) Compliance with Section 15.6 shall not be required where the change of occupancy classification complies with the requirements of 15.7.3.4.

15.7.3.5.1.3 Day-Care Occupancy Conversion. A conversion from a day-care home to a day-care occupancy with more than 12 clients shall be permitted only if the day-care occupancy conforms with the requirements of Chapter 18 for new day-care occupancies with more than 12 clients.

15.7.3.5.1.4 Egress Capacity for Occupancy Change to Equal or Lesser Risk Category. Egress capacity shall meet or exceed the occupant load as specified in 15.6.2.1.3 if the change of occupancy classification is to an equal or lesser risk category where evaluated in accordance with Table 15.7.3.5.1.1.

15.7.3.6 Enclosure of Vertical Shafts.

15.7.3.6.1 General. Vertical openings shall be designed to meet the requirements for atriums or the requirements of 15.7.3.6.2 through 15.7.3.6.4.

15.7.3.6.2 Stairways. Where a change of occupancy classification is to a higher risk category in accordance with Table 15.7.3.5.1.1, interior stairways shall be enclosed as required by 15.7.3.6, unless otherwise provided in 15.7.3.6.2.1 through 15.7.3.6.2.3.

15.7.3.6.2.1 In other than health care and detention and correctional occupancies, an enclosure shall not be required for openings serving only one adjacent floor and not connected with corridors or stairways serving other floors.

15.7.3.6.2.2 Where there is at least one exit that complies with 11.1.3.2, unenclosed existing stairways shall not be required to be enclosed in a continuous vertical shaft if each story is separated from other stories by 1-hour fire-resistive construction or approved wired glass set in steel frames and all exit corridors are sprinklered. The openings between the corridor and occupant space shall have at least one sprinkler head above the openings of the tenant side. The sprinkler system shall be permitted to be supplied from the domestic water supply systems, provided that the system is of adequate pressure, capacity, and sizing for the combined domestic and sprinkler requirements.

15.7.3.6.2.3 Existing penetrations of stairway enclosures shall be permitted if they are properly protected in accordance with Section 8.8.

Copyright National Fire Protection Association
Provided by IHS under license with NFPA
No reproduction or networking permitted without license from IHS
Not for Resale

15.7.3.6.3 Other Vertical Shafts. Where there is a change of occupancy classification to a higher risk category in accordance with Table 15.7.3.5.1.1, interior vertical shafts, other than stairways and those enclosing commercial kitchen exhaust ducts including, but not limited to, elevator hoistways and service and utility shafts shall be enclosed as required by Section 8.12, unless otherwise provided in 15.7.3.6.3.1 through 15.7.3.6.3.3.

15.7.3.6.3.1 Existing 1-hour interior shaft enclosures shall be permitted where a higher rating is required.

15.7.3.6.3.2 Vertical openings, other than stairways, shall not be required to be enclosed if the entire building is provided with an approved automatic sprinkler system.

15.7.3.6.3.3 Where 1-hour fire-resistive floor construction is required, vertical shafts shall not be required to be enclosed where floor penetrations are fireblocked at every floor level.

15.7.3.6.4 Openings. Where there is a change of occupancy classification to a higher risk category in accordance with Table 15.7.3.5.1.1, all openings into existing vertical shaft enclosures shall be protected by fire assemblies having a fire protection rating of not less than 1 hour and shall be maintained self-closing or shall be automatic-closing by actuation of a smoke detector. All other openings shall be fire protected in an approved manner. Existing fusible link–type automatic door-closing devices shall be permitted in all shafts except stairways if the fusible link rating does not exceed 135°F (57°C).

15.7.3.7 Automatic Sprinkler Systems.

15.7.3.7.1 Any change of occupancy classification shall comply with the automatic sprinkler system requirements for new construction, unless otherwise provided in 15.7.3.7.3.

15.7.3.7.2 The provisions of 15.6.2.5 shall be used to determine the extent of sprinkler protection required using the area that has changed occupancy as the rehabilitation work area.

15.7.3.7.3* In a change of occupancy classification from an existing residential or health care occupancy to a residential board and care occupancy, sprinklers shall not be required in small board and care homes, serving eight or fewer residents, when all occupants have the ability to move as a group within 3 minutes to a point exterior to, and away from, the building or to an approved exit.

15.7.3.8 Heights and Areas.

15.7.3.8.1 Occupancy Change to Higher Risk Category.

15.7.3.8.1.1 Where a change of occupancy classification occurs, the heights and areas risk category shall be determined in accordance with Table 15.7.3.8.1.1. Where a change of occupancy classification is to a higher risk category, heights and areas of buildings and structures shall meet the limitations of Chapter 7 for the new occupancy classification, unless otherwise provided in 15.7.3.8.1.2 and 15.7.3.8.1.3.

15.7.3.8.1.2 A one-story building changed to an educational occupancy shall not be required to meet the compartment area limitations of Section 7.4.

15.7.3.8.1.3 Where a change of occupancy to a higher risk category is to an assembly, health care, or detention or correctional occupancy, heights of buildings and structures shall meet the limitations of Chapter 7 for the new occupancy classification.

Table 15.7.3.8.1.1 Hazard Categories and Classifications — Heights and Areas

Relative Hazard	Occupancy Classification
1 (highest hazard)	High hazard contents exceeding the maximum allowable quantities per control area as set forth in 34.1.3
2	Assembly, day care, health care, ambulatory health care, detention and correctional, large residential board and care
3	Educational, residential, small residential board and care, mercantile, business, industrial, storage
4 (lowest hazard)	Industrial and storage occupancies with low hazard contents

15.7.3.8.1.4 Where a change of occupancy classification is to a higher risk category in accordance with Table 15.7.3.8.1.1, fire barrier walls or horizontal assemblies, or both, in mixed use buildings shall comply with the requirements for multiple occupancies in Section 6.2, unless otherwise provided in 15.7.3.8.1.5.

15.7.3.8.1.5 Where the fire barrier walls are required to have a 1-hour fire resistance rating, existing wood lath and plaster in good condition or existing stud wall clad in ½ in. (13 mm) thick gypsum wallboard or other equivalent assemblies shall be permitted.

15.7.3.8.2 Occupancy Changes to Equal or Lesser Risk Category. Where a change of occupancy classification is to an equal or lesser risk category in accordance with Table 15.7.3.8.1.1, the height and area of the existing building shall be deemed to be acceptable.

15.7.3.8.3 Stories in Detention and Correctional Occupancies. For the purposes of applying the height and area provisions of this *Code* in detention and correctional occupancies, the number of stories shall be counted starting with the primary level of exit discharge. The primary level of exit discharge of a building shall be that floor that is level with or above finished grade on the exterior wall line for 50 percent or more of its perimeter. Building levels below the primary level shall not be counted as a story in determining the height of the building.

15.7.3.8.4 Ambulatory Health Care Occupancies. Where new ambulatory health care facilities are located in existing buildings, the authority having jurisdiction shall be permitted to accept construction systems of lesser fire resistance than that required by 20.1.6, provided that it can be demonstrated to the authority's satisfaction that prompt evacuation of the facility can be achieved in case of fire, or that the exposing occupancies and materials of construction present no threat of fire penetration from such occupancy to the ambulatory health care facility or to the collapse of the structure.

15.7.3.9 Exterior Wall Fire Resistance Ratings.

15.7.3.9.1 Occupancy Change to Higher Risk Category.

15.7.3.9.1.1 Where a change of occupancy classification occurs, the exposure of exterior walls risk category shall be

Copyright National Fire Protection Association
Provided by IHS under license with NFPA
No reproduction or networking permitted without license from IHS
Not for Resale

Table 15.7.3.9.1.1 Hazard Categories and Classifications — Exposure of Exterior Walls

Relative Hazard	Occupancy Classification
1 (highest hazard)	High hazard contents exceeding the maximum allowable quantities per control area as set forth in 34.1.3
2	Mercantile, industrial, and storage occupancies with ordinary hazard contents
3	Assembly, educational, day care, health care, ambulatory health care, detention and correctional, residential, residential board and care, and business
4 (lowest hazard)	Occupancies containing low hazard contents

determined in accordance with Table 15.7.3.9.1.1. Where a change of occupancy classification is to a higher risk category, exterior walls shall have fire resistance and exterior opening protectives as required in Chapter 7, unless otherwise provided in 15.7.3.9.1.2 and 15.7.3.9.1.3.

15.7.3.9.1.2 The provision of 15.7.3.9.1.1 shall not apply to walls at right angles to the property line.

15.7.3.9.1.3 Where a fire resistance rating greater than 2 hours is required for a building of any type of construction, existing noncombustible exterior walls having a fire resistance rating equivalent to 2 hours as determined by NFPA 914, *Code for Fire Protection of Historic Structures*, shall be permitted, provided that the building does not exceed 3 stories in height and is classified as an assembly occupancy having an occupant load less than 300, a business occupancy, an industrial occupancy, a mercantile occupancy, or a storage occupancy.

15.7.3.9.2 Occupancy Change to Equal or Lesser Risk Category. Where a change of occupancy classification is to an equal or lesser risk category in accordance with Table 15.7.3.9.1.1, existing exterior walls, including openings, shall be deemed to be acceptable.

15.7.3.9.3 Opening Protectives.

15.7.3.9.3.1 Openings in exterior walls shall be protected as required by Chapter 7, unless otherwise provided in 15.7.3.9.3.3 through 15.7.3.9.3.6.

15.7.3.9.3.2 When openings in the exterior walls are required to be protected due to distance from the property line, the sum of the area of such openings shall not exceed 50 percent of the total area of the wall in each story, unless otherwise provided in 15.7.3.9.3.3 through 15.7.3.9.3.6.

15.7.3.9.3.3 The requirements of 15.7.3.9.3.1 and 15.7.3.9.3.2 shall not apply where Section 7.3 permits openings in excess of 50 percent.

15.7.3.9.3.4 Existing openings shall not be required to be protected in buildings of residential occupancies that do not exceed three stories in height and that have a fire separation distance of at least 36 in. (915 mm).

15.7.3.9.3.5 Where exterior opening protectives are required, an approved automatic sprinkler system throughout shall be permitted to be substituted for opening protection.

15.7.3.9.3.6 Exterior opening protectives shall not be required where the change of occupancy classification is to an equal or lower hazard classification in accordance with Table 15.7.3.9.1.1.

15.7.3.10 Occupancy Change to Residential Occupancy — Electrical Service. Where the occupancy classification of an existing building or part of an existing building is changed to a residential occupancy, other than hotel and dormitory occupancies, or a residential board and care occupancy, electrical service shall be upgraded to meet the requirements of Article 220 of NFPA 70 for the new occupancy classification.

15.7.3.11 Occupancy Change to Health Care Occupancy — Plumbing. If the occupancy classification is changed to a health care occupancy, the plumbing system shall comply with the requirements of the plumbing code.

15.8 Addition.

15.8.1 General Requirements.

15.8.1.1 An addition to a building or structure shall comply with other sections of this *Code*, the mechanical code, plumbing code, fire code, electrical code, boiler safety code, energy code, elevator code, and accessibility code without requiring the existing building or structure to comply with any requirements of those codes or of this *Code*.

15.8.1.2 An addition shall not create or extend any nonconformity in the existing building to which the addition is constructed with regard to accessibility; structural strength; fire safety; means of egress; or capacity of mechanical, plumbing, or electrical systems.

15.8.1.3 Any repair, renovation, alteration, or reconstruction work within an existing building to which an addition is being made shall comply with the requirements of Sections 15.3, 15.4, 15.5, and 15.6.

15.8.2 Heights and Areas.

15.8.2.1 No addition shall increase the height or area of an existing building beyond that permitted under the applicable provisions of Section 7.4 for new buildings, unless otherwise provided in 15.8.2.2.

15.8.2.2 In filling of floor openings, nonoccupiable appendages such as elevator and exit stair shafts, and the addition of mezzanines and equipment roof structures, shall be permitted beyond that permitted by Section 32.13.

15.8.3 Fire Protection Systems. Existing building areas increased by the addition shall be protected with an approved automatic sprinkler system. The building area required to be sprinklered shall be determined by fire barrier walls having a fire resistance rating as determined in accordance with Section 7.2.

15.8.4 Structural Loads.

15.8.4.1 Unless the structural element remains in compliance with this *Code*, the addition shall not increase the stresses in any structural element of the existing building or structure by more than 5 percent cumulative since original construction, except as permitted by 15.8.4.2.

Copyright National Fire Protection Association
Provided by IHS under license with NFPA
No reproduction or networking permitted without license from IHS
Not for Resale

15.8.4.2 The addition shall not increase the stresses in any structural element of the existing building or structure due to application of wind or seismic forces by more than 10 percent cumulative since original construction, unless the element remains in compliance with this *Code*.

15.8.5 Smoke Alarms in One- and Two-Family Dwellings and Small Residential Board and Care Occupancies.

15.8.5.1 Where an addition is made to a one- and two-family dwelling or a small residential board and care occupancy, smoke alarms meeting the requirements of the other sections of this *Code* shall be installed and maintained in the addition.

15.8.5.2 Where an addition is made to a one- and two-family dwelling or a small residential board and care occupancy, the existing building shall be provided with smoke alarms as required by NFPA *101*.

15.8.6 Accessibility Requirements. Additions shall comply with Chapter 12.

15.8.7 Energy Conservation. Additions to existing buildings or structures shall be permitted to be made to such buildings or structures without the entire building or structure complying with the requirements of Chapter 51. The addition shall conform to the requirements of Chapter 51 as they relate to new construction only, provided that the allowable amount of glass in the addition is based on the area of the entire building.

15.8.8 Plumbing Requirements. In areas where public sanitary sewers are not available, existing structures that are being enlarged, and that discharge liquid wastes containing grease, flammable wastes, sand, solids, and other ingredients harmful to the building drainage system, shall have all existing floor drains permanently plugged or retrofitted to allow them to flow into an approved sand interceptor, which shall drain into a 1000 gal (3.8 m^3) or larger approved holding tank.

15.9 Damaged or Unsafe Buildings.

15.9.1 General. Unsafe conditions or elements, as described in 1.7.5.3.1.1, shall be corrected in accordance with Section 15.9.

15.9.2 Nonstructural Conditions.

15.9.2.1 If the nonstructural condition or element was not unsafe at time of construction, the unsafe condition or element shall be restored to its original condition.

15.9.2.2 If the nonstructural condition or element is determined to have been unsafe at the time of construction, the unsafe condition or element shall be corrected in accordance with 15.9.2.2.1 and 15.9.2.2.2.

15.9.2.2.1 For those conditions and elements for which this chapter contains specific requirements, the unsafe condition or element shall be brought into compliance with this chapter.

15.9.2.2.2* For those conditions and elements for which this chapter does not contain specific requirements, the unsafe condition or element shall be corrected as directed by the authority having jurisdiction.

15.9.3* Structural Conditions.

15.9.3.1 If the structural condition or element was not structurally unsafe at time of construction, the unsafe condition or element shall be permitted to be restored to its original condition.

15.9.3.2* If the structural condition or element is determined to have been structurally unsafe at the time of construction, the structurally unsafe condition or element shall be brought into compliance with the applicable structural requirements of this *Code*.

15.9.3.3 Where the structure of a building is damaged, an evaluation shall be conducted to determine whether such damage is substantial, as defined in 15.9.3.3.1, and whether the building was structurally unsafe prior to the damage.

15.9.3.3.1* Substantial Damage.

15.9.3.3.1.1 A building or structure shall be determined to have substantial damage where either of the following conditions exists:

(1) The total strength of a structural element, or group of elements, supporting more than 30 percent of the structure's vertical loads has been reduced by more than 25 percent from the predamaged condition, and the remaining capacity with respect to all dead and live loads is less than 75 percent of that required by this *Code*.
(2) The combined lateral strength of resisting structural elements in any story has been reduced by more than 20 percent from the predamaged condition.

15.9.3.3.1.2 Where complying with the requirements of Chapter 39, the definition for substantial damage provided in 39.2.22 shall apply to Chapter 39 requirements.

15.9.3.3.2 Where structural damage is less than substantial and the damaged elements were not structurally unsafe prior to damage, the damaged elements shall be permitted to be restored to the condition prior to damage.

15.9.3.3.3 Where structural damage is less than substantial and the damaged elements were structurally unsafe prior to damage, the damaged elements shall be brought into compliance with this *Code*, except as permitted in 15.9.3.3.4.

15.9.3.3.4 For resistance to wind and seismic loads, the damaged elements shall be restored to at least the condition prior to damage.

15.9.3.3.5 Where the structural damage is substantial, the entire structure shall be brought into compliance with this *Code*, except as permitted in 15.9.1.4.1 or 15.9.1.4.2.

15.9.3.3.5.1 Seismic loads shall be permitted to be 75 percent of those otherwise required in this *Code*.

15.9.3.3.5.2 Use of the alternative seismic requirements in 15.1.2.3.2 shall be permitted.

15.10 Historic Buildings and Structures.

15.10.1 General Requirements.

15.10.1.1 General.

15.10.1.1.1 Historic buildings and structures shall comply with the provisions of Section 15.10 or Sections 15.3, 15.4, 15.5, 15.6, and 15.7, relating to their repair, renovation, modification, reconstruction, movement, and change of occupancy.

15.10.1.1.2 Damaged or unsafe historic buildings and structures shall also comply with Section 15.9.

15.10.1.2 Investigation and Evaluation. A historic building undergoing modification, reconstruction, or change of occupancy shall be investigated and evaluated.

Copyright National Fire Protection Association
Provided by IHS under license with NFPA
No reproduction or networking permitted without license from IHS
Not for Resale

15.10.1.2.1 If it is intended that the building meet the requirements of this chapter, a written report shall be prepared for such a building and filed with the local jurisdiction by a registered design professional.

15.10.1.2.2 If the subject matter of the report does not require an evaluation by a registered design professional, the local jurisdiction shall be permitted to allow the report to be prepared by a licensed building contractor, an electrician, a plumber, a mechanical contractor, or a certified interior designer responsible for the work.

15.10.1.2.3 The licensed person preparing the report shall be knowledgeable in historic preservation, or the report shall be coauthored by a preservation professional. Such report shall identify each required safety feature in compliance with this chapter and specify where compliance with other chapters of this *Code* would be damaging to the contributing historic features.

15.10.1.2.4 The report shall describe each feature not in compliance with this *Code* and demonstrate how compliance with the intent of this *Code* is met by providing an equivalent level of safety.

15.10.1.2.5 The local preservation official shall review and comment on the written report or shall be permitted to request and review comments on the report from the state historic preservation officer.

15.10.1.2.6 Unless determined by the local jurisdiction that a report is required to protect the health and safety of the public, the following rehabilitation projects shall not require the submission of a report:

(1) Historic buildings complying with NFPA 914
(2) Buildings or structures are being rehabilitated for the personal use of the owner or a member of the immediate family of that person and not intended for any use or occupancy by the public, including assembly or employment

15.10.1.3 Flood Hazard Areas. For historic buildings or structures located in whole or in part in flood hazard areas established in 39.4.2, work on the building or structure shall be permitted, provided that both of the following criteria are met:

(1) The proposed work will not preclude continued designation as a historic building or structure.
(2) A variance to the flood provisions of this *Code* is granted by the board of appeals.

15.10.1.4 Accessibility Requirements. The accessibility requirements contained in this *Code* shall apply to historic buildings undergoing renovations, modifications, reconstruction, or a change of occupancy. If the historic character of the building is adversely affected, and the building is required to comply with ADAAG by the provisions of Section 15.4, then substantially equivalent alternative provisions of accessibility shall be permitted in accordance with the accessibility code. If the historic character of the building is adversely affected, then a waiver shall be permitted to be requested in accordance with the accessibility code.

15.10.1.5 Energy Efficiency. A building or structure that has been designated as historically significant by the state or local jurisdiction or that is listed in the National Register of Historic Places by the U.S. secretary of the interior, or a building or structure that has been determined as eligible for said listing, shall be exempt from the provisions of Chapter 51 to the extent permitted by other sections of this chapter.

15.10.2 Repairs. Repairs to any portion of a historic building or structure shall be permitted to be made with original or like materials and original methods of construction, subject to the provisions of Section 15.10.

15.10.3 Relocated Buildings.

15.10.3.1 Construction. Any repair, renovation, modification, reconstruction, movement, and change of use of relocated historic structures shall comply with the requirements of Section 15.10.

15.10.3.2 Foundations. Foundations of relocated historic buildings and structures shall comply with Chapter 36. Relocated historic buildings shall otherwise be considered as historic buildings for the purposes of this *Code*.

15.10.3.3 Siting. Relocated historic buildings and structures shall be so sited that fire separation distance and opening protectives comply with the requirements of Section 7.3.

15.10.4 Repair, Renovation, Modification, or Reconstruction.

15.10.4.1 General. Historic buildings undergoing repair, renovation, modification, or reconstruction shall comply with all of the applicable requirements of Sections 15.3 through 15.6, except as specifically permitted in Section 15.10.

15.10.4.2 Replacement. Replacement of existing or missing features using original or like materials shall be permitted. Partial replacement for repairs that match the original in configuration, height, and size shall be permitted. Such replacements shall not be required to meet the materials and methods requirements in 15.1.1.7. Replacement glazing in hazardous locations shall comply with 15.3.1.3.2.

15.10.4.3 Roof Covering. The existing type of roof covering shall be permitted to be continued and replaced with the same materials if the historic materials are documented to the satisfaction of the local jurisdiction.

15.10.4.4 Means of Egress. Existing door openings, window openings intended for emergency egress, and corridor and stairway widths of less than those that would be acceptable for nonhistoric buildings under this *Code* shall be approved, provided that, in the opinion of the local jurisdiction, there is sufficient width and height for a person to pass through the opening or traverse the exit and that the capacity of the exit system is adequate for the occupant load, or provided that other operational controls to limit occupancy are approved by the local jurisdiction.

15.10.4.5 Door Swing. Where approved by the local jurisdiction, the existing front doors shall not be required to swing in the direction of exit travel, provided that other approved exits having sufficient capacity to serve the total occupant load are provided.

15.10.4.6 Transoms. In fully sprinklered buildings in hotels and dormitories, apartment buildings, and residential board and care occupancies, existing transoms in corridors and other fire-rated walls shall be permitted to be maintained if fixed in the closed position. A sprinkler shall be installed on each side of the transom.

15.10.4.7 Interior Finishes. The existing finishes of walls and ceilings shall be permitted where it is demonstrated that such finish is the historic finish. In other than one- and two-family

Copyright National Fire Protection Association
Provided by IHS under license with NFPA
No reproduction or networking permitted without license from IHS
Not for Resale

dwellings, finishes in exitways shall have a flame spread classification of Class C or better. Existing nonconforming materials shall be surfaced with an approved fire-retardant paint or finish, unless the building is equipped throughout with an approved automatic sprinkler system.

15.10.4.8 Stairway Enclosure.

15.10.4.8.1 Stairway enclosures shall not be required in a historic building where a stairway serves only one adjacent floor.

15.10.4.8.2 In buildings of three stories or less, exit enclosure construction shall limit the spread of smoke by the use of tight-fitting doors and solid elements. Such elements shall not be required to have a fire rating.

15.10.4.9 One-Hour Fire-Resistive Assemblies. Where 1-hour fire-resistive construction is required by this *Code*, it shall not be required to be provided where the existing wall and ceiling finish is wood lath and plaster, regardless of construction or occupancy.

15.10.4.10 Stairway Railing. Grand stairways shall be permitted without complying with the handrail and guardrail requirements of 11.2.2.4. Existing handrails and guards shall be permitted to remain, provided that they are not structurally dangerous.

15.10.4.11 Exit Signs. The local jurisdiction shall be permitted to accept an alternate exit sign or egress path marking location, to that specified in Section 11.10, where such sign or marking would have an adverse effect on the historic character. Alternative signs shall identify the exits and egress path.

15.10.4.12 Sprinkler Alternative. Every historic building that does not conform to the construction requirements specified in other chapters of this *Code* for the specific occupancy or use and that, in the opinion of the local jurisdiction, constitutes a fire safety hazard shall be equipped throughout with an approved automatic sprinkler system. However, such automatic sprinkler system shall not be used as a substitute for, or act as an alternate to, the required number of exits from any facility.

15.10.4.13 Safety from Fire.

15.10.4.13.1 NFPA 914 shall be permitted to be used as an alternative to the fire safety requirements of Section 15.3, Section 15.4, Section 15.5, Section 15.6, or Section 15.7.

15.10.4.13.2 NFPA 914 shall be permitted to be used as an alternative to the fire safety requirements of Section 15.9.

15.10.5 Change of Occupancy.

15.10.5.1 General. Historic buildings undergoing a change of occupancy shall comply with the applicable provisions of Section 15.7, except as specifically permitted in 15.10.5.2 through 15.10.5.13. Where Section 15.7 requires compliance with specific requirements of Section 15.6, and where those requirements are subject to exceptions in 15.10.4, the same exceptions shall apply to the requirements of 15.10.5.

15.10.5.2 Compartment Area. The allowable compartment area for historic buildings undergoing a change of occupancy shall be permitted to exceed the allowable areas specified in Section 7.4 by 20 percent.

15.10.5.3 Location on Property. Historic structures undergoing a change of use to a higher hazard category in accordance with 15.7.3.9.1 shall be permitted to use alternative methods to comply with the fire resistance and exterior opening protective requirements. Such alternatives shall comply with 15.10.1.2.

15.10.5.4 Roof Covering. Regardless of occupancy or use group, roof-covering materials not less than Class C shall be permitted where a fire-retardant roof covering is required.

15.10.5.5 Means of Egress. Existing door openings, window openings intended for emergency egress, and corridor and stairway widths of less than those that would be acceptable for nonhistoric buildings under this *Code* shall be approved, provided that, in the opinion of the local jurisdiction, there is sufficient width and height for a person to pass through the opening or traverse the exit and that the capacity of the exit system is adequate for the occupant load, or provided that other operational controls to limit occupancy are approved by the local jurisdiction.

15.10.5.6 Door Swing. Where approved by the local jurisdiction, the existing front doors shall not be required to swing in the direction of exit travel, provided that other approved exits having sufficient capacity to serve the total occupant load are provided.

15.10.5.7 Transoms.

15.10.5.7.1 In corridor walls required to be fire rated by this *Code*, existing transoms shall be permitted to be maintained if fixed in the closed position and if fixed wired glass set in a steel frame or other approved glazing is installed on one side of the transom, unless otherwise provided in 15.10.5.7.2.

15.10.5.7.2 Transoms conforming to 15.10.4.6 shall be permitted.

15.10.5.8 Finishes.

15.10.5.8.1 Where finish materials are required to have a flame spread classification of Class C or better, existing nonconforming materials shall be surfaced with an approved fire-retardant paint or finish, unless otherwise provided in 15.10.5.8.2.

15.10.5.8.2 Existing nonconforming materials shall not be required to be surfaced with an approved fire-retardant paint or finish where the building is equipped throughout with an approved automatic sprinkler system and the nonconforming materials can be substantiated as historic in character.

15.10.5.9 One-Hour Fire-Resistive Assemblies. Where 1-hour fire-resistive construction is required by this chapter, it shall not be required to be provided where the existing wall and ceiling finish is wood lath and plaster, regardless of construction or occupancy.

15.10.5.10 Stairs and Railing. Existing stairways shall comply with the requirements of this chapter. The local jurisdiction shall grant alternatives for grand stairways and railings if alternative stairways are found to be acceptable or if judged as meeting the intent of this *Code*. Existing stairways shall comply with 15.10.4.10.

15.10.5.11 Exit Signs. The local jurisdiction shall be permitted to accept alternate exit sign locations, to that specified in Section 11.10, where such signs would have an adverse effect on the historic character. Such signs shall identify the exits and exit path.

15.10.5.12 Exit Stair Live Load. Existing historic stairways in buildings changed to hotels and dormitories and apartment

Copyright National Fire Protection Association
Provided by IHS under license with NFPA
No reproduction or networking permitted without license from IHS
Not for Resale

occupancies shall be permitted where it can be shown that the stairway can support a 75 lbf/ft^2 (3590 N/m^2) live load.

15.10.5.13 Natural Light. Where it is determined by the local jurisdiction that compliance with the natural light requirements of 15.7.2.7 will lead to loss of historic character, historic materials, or both in the building, the existing level of natural lighting shall be considered acceptable.

Chapter 16 Assembly Occupancies

16.1 General Requirements.

16.1.1 Application.

16.1.1.1 The requirements of this chapter shall apply to new buildings or portions thereof used as an assembly occupancy.

16.1.1.2 Repairs, renovations, modifications, additions, and reconstruction of an assembly occupancy, and changes of use, including change of occupancy classification to an assembly occupancy, or correction of a damaged or unsafe portion of the building containing the assembly occupancy, shall comply with one of the following:

(1) Provisions of this chapter
(2) Provisions of Chapter 15

16.1.2 Multiple Occupancies.

16.1.2.1 General. Multiple occupancies shall be in accordance with Section 6.2 and 16.1.2. Where there are differences in the specific requirements in this chapter and provisions for mixed occupancies or separated occupancies as specified in 6.2.3 and 6.2.4, the requirements of this chapter shall apply. *(See 4.3.2.3.)*

16.1.2.2* Simultaneous Occupancy. Exits shall be sufficient for simultaneous occupancy of both the assembly occupancy and other parts of the building, except where the authority having jurisdiction determines that the conditions are such that simultaneous occupancy will not occur.

16.1.2.3 Assembly and Mercantile Occupancies in Mall Buildings. The provisions of this chapter shall apply to the assembly occupancy tenant space. The provisions of 27.4.4 shall be permitted to be used outside the assembly occupancy tenant space.

16.1.3* Classification of Occupancy. Classification of occupancy shall be in accordance with 6.1.2.

16.1.4 Classification of Hazard of Contents.

16.1.4.1 Hazard of contents shall be classified in accordance with 6.3.2.

16.1.4.2 Buildings or areas in which high hazard contents are stored, used, or handled shall comply with Chapter 34.

16.1.5 Minimum Construction Requirements.

16.1.5.1 Construction shall be in accordance with all of the following, except as otherwise modified by 16.1.5.2:

(1) Chapter 7, Construction Types and Height and Area Requirements
(2) Chapter 8, Fire-Resistive Materials and Construction
(3) Chapter 13, Encroachments into the Public Right-of-Way
(4) Chapter 14, Safeguards During Construction
(5) Chapter 31, Occupancies in Special Structures
(6) Chapter 35, Structural Design
(7) Chapter 36, Soils, Foundations, and Retaining Walls
(8) Chapter 37, Exterior Wall Construction
(9) Chapter 38, Roof Assemblies and Roof Structures
(10) Chapter 39, Flood-Resistant Design and Construction
(11) Chapter 40, Quality Assurance During Construction

16.1.5.2 The location of an assembly occupancy shall be limited in accordance with Chapter 7 or Table 16.1.5.2, whichever is more stringent.

16.1.6* Occupant Load. The occupant load, in number of persons for whom means of egress and other provisions are required, shall be determined on the basis of the occupant load factors of Table 11.3.1.2 that are characteristic of the use of the space or shall be determined as the maximum probable population of the space under consideration, whichever is greater. In areas not in excess of 10,000 ft^2 (930 m^2), the occupant load shall not exceed one person in 5 ft^2 (0.46 m^2); in areas in excess of 10,000 ft^2 (930 m^2), the occupant load shall not exceed one person in 7 ft^2 (0.65 m^2).

16.1.6.1 Waiting Spaces. In theaters and other assembly occupancies where persons are admitted to the building at times when seats are not available to them, or when the permitted occupant load has been reached based on 16.1.6 and persons are allowed to wait in a lobby or similar space until seats or space is available, such use of a lobby or similar space shall not encroach upon the required clear width of exits. Such waiting shall be restricted to areas other than the required means of egress. Exits shall be provided for such waiting spaces on the basis of one person for each 3 ft^2 (0.28 m^2) of waiting space area. Such exits shall be in addition to the exits specified for the main auditorium area and shall conform in construction and arrangement to the general rules for exits given in this chapter.

16.1.6.2 Large Occupant Loads. Where the occupant load of an assembly occupancy is greater than 6000, a life safety evaluation shall be performed in accordance with 16.4.1.

16.1.6.3 Outdoor Facilities. In outdoor facilities, where approved by the authority having jurisdiction, the number of occupants provided with a minimum of 15 ft^2 (1.4 m^2) of lawn surface shall be permitted to be excluded from the maximum occupant load of 6000 specified in 16.1.6.2 in determining the need for a life safety evaluation.

16.1.7 Accessibility. Accessibility shall be in accordance with Chapter 12.

16.2 Means of Egress Requirements.

16.2.1 General. All means of egress shall be in accordance with Chapter 11 and this chapter.

16.2.2 Means of Egress Components.

16.2.2.1 General. Components of means of egress shall be limited to the types described in 16.2.2.2 through 16.2.2.10.

16.2.2.2 Doors.

16.2.2.2.1 Doors complying with 11.2.1 shall be permitted.

16.2.2.2.2 Assembly occupancies with occupant loads of 300 or less in malls *(see 27.4.4.5)* shall be permitted to have horizontal or vertical security grilles or doors complying with 11.2.1.4.1.3 on the main entrance/exits.

16.2.2.2.3 Any door in a required means of egress from an area having an occupant load of 100 or more persons shall be

--`,,```,,,,````-`-`,,`,,`,`,,`---
Copyright National Fire Protection Association
Provided by IHS under license with NFPA
No reproduction or networking permitted without license from IHS
Not for Resale

Table 16.1.5.2 Construction Type Limitations

Type of Construction	Below LED	LED	Number of Levels Above LED			
			1	2	3	≥4
I(442)[a,b,c] I(332)[a,b,c] II(222)[a,b,c]	Any assembly[d]	Any assembly	Any assembly	Any assembly	Any assembly	Any assembly, if OL > 300[d]
II(111)[a,b,c]	Any assembly, limited to 1 level below LED[d]	Any assembly	Any assembly	Any assembly, if OL > 1000[d]	Assembly with OL ≤1000[d]	NP
III(211)[b] IV(2HH) V (111)	Any assembly, limited to 1 level below LED[d]	Any assembly	Any assembly	Any assembly, if OL > 300[d]	Assembly with OL ≤1000[d]	NP
II(000)	Assembly with OL ≤1000, limited to 1 level below LED[d]	Any assembly, if OL > 1000[d]	Assembly with OL ≤300[d]	NP	NP	NP
III(200) V(000)	Assembly with OL ≤1000, limited to 1 level below LED[d]	Assembly with OL ≤1000	Assembly with OL ≤300[d]	NP	NP	NP

LED: Level of exit discharge. OL: Occupant load. NP: Not permitted.

Note: For the purpose of this table, a mezzanine is not counted as a level.

[a]Where all parts of the roof construction are 20 ft (6100 mm) or more above any floor immediately below, see 7.2.3.2.8 and 7.2.7.5.

[b]Where seating treads and risers serve as floors, such seating treads and risers are permitted to be of 1-hour fire resistance–rated construction. Structural members supporting seating treads and risers are to conform to the requirements of Table 16.1.5.2. Joints between seating treads and riser units are permitted to be unrated, provided that such joints do not involve separation from areas containing high hazard contents, and the facility is constructed and operated in accordance with 16.4.2.

[c]In open-air fixed seating facilities, including stadia, omission of fire protection of structural members exposed to the outside atmosphere is permitted where substantiated by an approved engineering analysis.

[d]Permitted, provided that all the following are protected throughout by an approved, electrically supervised automatic sprinkler system in accordance with Section 55.3:

(1) Level of the assembly occupancy

(2) Any level below the level of the assembly occupancy

(3) In the case of an assembly occupancy located below the level of exit discharge, any level intervening between that level and the level of exit discharge

permitted to be provided with a latch or lock only if it is panic hardware or fire exit hardware complying with 11.2.1.7, unless otherwise provided by the following:

(1) The requirement of 16.2.2.2.3 shall not apply to delayed-egress locks as permitted in 16.2.2.2.5.
(2) The requirement of 16.2.2.2.3 shall not apply to access-controlled egress doors as permitted in 16.2.2.2.6.

16.2.2.2.4 Locking devices complying with 11.2.1.5.5 shall be permitted to be used on a single door or a single pair of doors, provided that both of the following conditions apply:

(1) The door or pair of doors serves as the main exit, and the assembly occupancy has an occupant load not greater than 500.
(2) Any latching devices on such a door(s) from assembly occupancies having an occupant load of 100 or more are released by panic hardware or fire exit hardware.

16.2.2.2.5 Delayed-egress locks complying with 11.2.1.6.1 shall be permitted on doors other than main entrance/exit doors.

16.2.2.2.6 Doors in the means of egress shall be permitted to be equipped with an approved access control system complying with 11.2.1.6.2. Doors shall not be locked from the egress side when the assembly occupancy is occupied.

16.2.2.2.7 Revolving doors complying with the requirements of 11.2.1.10 shall be permitted. The provisions of 11.2.1.11.1 and 11.2.1.11.1.2 that permit turnstiles where revolving doors are permitted shall not apply.

16.2.2.2.8 No turnstiles or other devices that restrict the movement of persons shall be installed in any assembly occupancy in such a manner as to interfere in any way with required means of egress facilities.

16.2.2.3 Stairs.

16.2.2.3.1 General. Stairs complying with 11.2.2 shall be permitted, unless one of the following criteria applies:

(1) *Stairs serving seating that is designed to be repositioned shall not be required to comply with 11.2.2.3.1.
(2) The requirement of 16.2.2.3.1 shall not apply to stages and platforms as permitted by 16.4.5.

Copyright National Fire Protection Association
Provided by IHS under license with NFPA
No reproduction or networking permitted without license from IHS
Not for Resale

16.2.2.3.2 Catwalk, Gallery, and Gridiron Stairs.

16.2.2.3.2.1 Noncombustible grated stair treads and landing floors shall be permitted in means of egress from lighting and access catwalks, galleries, and gridirons.

16.2.2.3.2.2 Spiral stairs complying with 11.2.2.2.3 shall be permitted in means of egress from lighting and access catwalks, galleries, and gridirons.

16.2.2.4 Smokeproof Enclosures. Smokeproof enclosures complying with 11.2.3 shall be permitted.

16.2.2.5 Horizontal Exits. Horizontal exits complying with 11.2.4 shall be permitted.

16.2.2.6 Ramps.

16.2.2.6.1 Ramps complying with 11.2.5 shall be permitted.

16.2.2.6.2 Ramps not part of an accessible means of egress and serving only stages or nonpublic areas and ramped aisles shall be permitted to have a slope not steeper than 1 in 8.

16.2.2.7 Exit Passageways. Exit passageways complying with 11.2.6 shall be permitted.

16.2.2.8 Fire Escape Ladders.

16.2.2.8.1 Fire escape ladders complying with 11.2.9 shall be permitted.

16.2.2.8.2 For ladders serving catwalks, the 3-person limitation specified in 11.2.9.1(3) shall be permitted to be increased to 10 persons.

16.2.2.9 Alternating Tread Devices. Alternating tread devices complying with 11.2.11 shall be permitted.

16.2.2.10 Areas of Refuge. Areas of refuge complying with 11.2.12 shall be permitted.

16.2.3 Capacity of Means of Egress.

16.2.3.1 General. The capacity of means of egress shall be in accordance with one of the following:

(1) Section 11.3 for other than theater-type seating or smoke-protected assembly seating
(2) Paragraph 16.2.3.2 for rooms with theater-type seating or similar seating arranged in rows
(3) Subsection 16.4.2 for smoke-protected assembly seating

16.2.3.2* Theater-Type Seating.

16.2.3.2.1 Minimum clear widths of aisles and other means of egress serving theater-type seating, or similar seating arranged in rows, shall be in accordance with Table 16.2.3.2.1.

Table 16.2.3.2.1 Capacity Factors

	Clear Width per Seat Served			
	Stairs		Passageways, Ramps, and Doorways	
Number of Seats	in.	mm	in.	mm
Unlimited	0.3 *AB*	7.6 *AB*	0.22 *C*	5.6 *C*

16.2.3.2.2 The minimum clear widths shown in Table 16.2.3.2.1 shall be modified in accordance with all of the following:

(1) If risers exceed 7 in. in height, the stair width in the table shall be multiplied by factor *A*, where *A* equals the following:

$$A = 1 + \frac{\text{riser height} - 7}{5}$$

(2) If risers exceed 178 mm in height, the stair width in the table shall be multiplied by factor *A*, where *A* equals the following:

$$A = 1 + \frac{\text{riser height} - 178}{125}$$

(3) Stairs not having a handrail within a 30 in. (760 mm) horizontal distance shall be 25 percent wider than otherwise calculated; that is, their width shall be multiplied by factor *B*, where *B* equals the following:

$$B = 1.25$$

(4) Ramps steeper than 1 in 10 slope where used in ascent shall have their width increased by 10 percent; that is, their width shall be multiplied by factor *C*, where *C* equals the following:

$$C = 1.10$$

16.2.3.2.3 The requirements of 16.2.3.2.1 and 16.2.3.2.2 shall not apply to lighting and access catwalks as permitted by 16.4.5.8.

16.2.3.3 Main Entrance/Exit.

16.2.3.3.1 Every assembly occupancy shall be provided with a main entrance/exit.

16.2.3.3.2 The main entrance/exit width shall be as follows:

(1) The main entrance/exit shall be of a width that accommodates two-thirds of the total occupant load in the following assembly occupancies:
   (a) Bars with live entertainment
   (b) Dance halls
   (c) Discotheques
   (d) Nightclubs
   (e) Assembly occupancies with festival seating
(2) In assembly occupancies, other than those listed in 16.2.3.3.2(1), the main entrance/exit shall be of a width that accommodates one-half of the total occupant load.

16.2.3.3.3 The main entrance/exit shall be at the level of exit discharge or shall connect to a stairway or ramp leading to a street.

16.2.3.3.4 Access to the main entrance/exit shall be as follows:

(1) Each level of the assembly occupancy shall have access to the main entrance/exit, and such access shall have the capacity to accommodate two-thirds of the occupant load of such levels in the following assembly occupancies:
   (a) Bars with live entertainment
   (b) Dance halls
   (c) Discotheques
   (d) Nightclubs
   (e) Assembly occupancies with festival seating

Copyright National Fire Protection Association
Provided by IHS under license with NFPA
No reproduction or networking permitted without license from IHS
Not for Resale

(2) In assembly occupancies, other than those listed in 16.2.3.3.4(1), each level of the assembly occupancy shall have access to the main entrance/exit, and such access shall have the capacity to accommodate one-half of the occupant load of such levels.

16.2.3.3.5 Where the main entrance/exit from an assembly occupancy is through a lobby or foyer, the aggregate capacity of all exits from the lobby or foyer shall be permitted to provide the required capacity of the main entrance/exit, regardless of whether all such exits serve as entrances to the building.

16.2.3.3.6 In assembly occupancies where there is no well-defined main entrance/exit, exits shall be permitted to be distributed around the perimeter of the building, provided that the total exit width furnishes not less than 100 percent of the width needed to accommodate the permitted occupant load.

16.2.3.4 Other Exits. Each level of an assembly occupancy shall have access to the main entrance/exit and shall be provided with additional exits of sufficient width to accommodate a minimum of one-half of the total occupant load served by that level.

16.2.3.4.1 Additional exits shall discharge in accordance with 16.2.7.

16.2.3.4.2 Additional exits shall be located as far apart as practicable and as far from the main entrance/exit as practicable.

16.2.3.4.3 Additional exits shall be accessible from a cross aisle or a side aisle.

16.2.3.4.4 In assembly occupancies where there is no well-defined main entrance/exit, exits shall be permitted to be distributed around the perimeter of the building, provided that the total exit width furnishes a minimum of 100 percent of the width needed to accommodate the permitted occupant load.

16.2.3.5 Corridor Minimum Width. The minimum width of any exit access corridor serving 50 or more persons shall be 44 in. (112 cm).

16.2.4* Number of Exits.

16.2.4.1 The number of exits shall be in accordance with Section 11.4, other than exits for fenced outdoor assembly occupancies in accordance with 16.2.4.2.

16.2.4.2 A fenced outdoor assembly occupancy shall have at least two remote means of egress from the enclosure in accordance with 11.5.1.3 and 11.5.1.4, unless otherwise required by one of the following:

(1) If more than 6000 persons are to be served by such means of egress, there shall be at least 3 means of egress.
(2) If more than 9000 persons are to be served by such means of egress, there shall be at least 4 means of egress.

16.2.4.3 Balconies or mezzanines having an occupant load not greater than 50 shall be permitted to be served by a single means of egress, and such means of egress shall be permitted to lead to the floor below.

16.2.4.4 Balconies or mezzanines having an occupant load greater than 50, but not greater than 100, shall have at least 2 remote means of egress, but both such means of egress shall be permitted to lead to the floor below.

16.2.4.5 Balconies or mezzanines having an occupant load greater than 100 shall be provided with means of egress as for a floor.

16.2.4.6 A second means of egress shall not be required from lighting and access catwalks, galleries, and gridirons where a means of escape to a floor or a roof is provided. Ladders, alternating tread devices, or spiral stairs shall be permitted in such means of escape.

16.2.5 Arrangement of Means of Egress.

16.2.5.1 General.

16.2.5.1.1 Means of egress shall be arranged in accordance with Section 11.5.

16.2.5.1.2 Common paths of travel shall be permitted for the first 20 ft (6100 mm) from any point where serving any number of occupants and for the first 75 ft (23 m) from any point where serving not more than 50 occupants.

16.2.5.1.3 Dead-end corridors shall not exceed 20 ft (6100 mm).

16.2.5.2 Limitations. Means of egress shall not be permitted through kitchens, storerooms, restrooms, closets, or hazardous areas as described in 16.3.2.

16.2.5.3 Auditoriums and Arenas. Where the floor area of auditoriums and arenas is used for assembly activities/events, at least 50 percent of the occupant load shall have means of egress provided without passing through adjacent fixed seating areas.

16.2.5.4 General Requirements for Access and Egress Routes within Assembly Areas.

16.2.5.4.1 Festival seating, as defined in 3.3.538.1, shall be prohibited within a building, unless otherwise permitted by one of the following:

(1) Festival seating shall be permitted in assembly occupancies having occupant loads of 250 or less.
(2) Festival seating shall be permitted in assembly occupancies where occupant loads exceed 250 and an approved life safety evaluation has been performed. *(See 16.4.1.)*

16.2.5.4.2* Access and egress routes shall be designed and constructed so that any individual is able to move without undue hindrance, on personal initiative and at any time, from an occupied position to exits.

16.2.5.4.3* Access and egress routes shall be designed and constructed so that crowd management, security, and emergency medical personnel are able to move without undue hindrance at any time to any individual.

16.2.5.4.4* The width of aisle accessways and aisles shall provide sufficient egress capacity for the number of persons accommodated by the catchment area served by the aisle accessway or aisle in accordance with 16.2.3.1 or, for smoke-protected assembly seating, in accordance with 16.4.2. Where aisle accessways or aisles converge to form a single path of egress travel, the required egress capacity of that path shall be not less than the combined required capacity of the converging aisle accessways and aisles.

16.2.5.4.5 Those portions of aisle accessways and aisles where egress is possible in either of two directions shall be uniform in required width, unless otherwise permitted by 16.2.5.4.6.

16.2.5.4.6 The requirement of 16.2.5.4.5 shall not apply to those portions of aisle accessways where the required width, not including the seat space described by 16.2.5.7.3, does not exceed 12 in. (305 mm).

--`,,```,,,,````-`-`,,`,,`,`,,`---
Copyright National Fire Protection Association
Provided by IHS under license with NFPA
No reproduction or networking permitted without license from IHS
Not for Resale

16.2.5.4.7 In the case of side boundaries, other than for nonfixed seating at tables, for aisle accessways or aisles, the clear width shall be measured to boundary elements such as walls, guardrails, handrails, edges of seating, tables, and side edges of treads, with the measurement made horizontally to the vertical projection of the elements resulting in the smallest width measured perpendicularly to the line of travel.

16.2.5.5* Aisle Accessways Serving Seating Not at Tables.

16.2.5.5.1* The required clear width of aisle accessways between rows of seating shall be determined as follows:

(1) Horizontal measurements shall be made, between vertical planes, from the back of one seat to the front of the most forward projection of the seat immediately behind it.
(2) Where the entire row consists of automatic-rising or self-rising seats that comply with ASTM F 851, *Test Method for Self-Rising Seat Mechanisms*, the measurement shall be permitted to be made with the seats in the up position.

16.2.5.5.2 The aisle accessway between rows of seating shall have a clear width of not less than 12 in. (305 mm), and this minimum clear width shall be increased as a function of row length in accordance with 16.2.5.5.5 and 16.2.5.5.6, unless otherwise permitted in 16.2.5.5.3 and 16.2.5.5.4.

16.2.5.5.3 If used by not more than four persons, there shall be no minimum clear width requirement for the portion of the aisle accessway having a length not exceeding 6 ft (1.8 m), measured from the center of the seat farthest from the aisle.

16.2.5.5.4 The increase in aisle accessway width required by 16.2.5.5.2 shall not apply to grandstands, bleachers, and folding and telescopic seating, provided that the number of seats between the farthest seat and an aisle does not exceed that shown in Table 16.4.8.2.5.

16.2.5.5.5* Rows of seating served by aisles or doorways at both ends shall have not more than 100 seats per row.

16.2.5.5.5.1 The 12 in. (305 mm) minimum clear width of aisle accessway between rows of seating specified in 16.2.5.5.5 shall be increased by 3/10 in. (7.6 mm) for every seat over a total of 14, but shall not be required to exceed 22 in. (560 mm).

16.2.5.5.5.2 The requirements of 16.2.5.5.5.1 shall not apply to smoke-protected assembly seating as permitted by 16.4.2.4.

16.2.5.5.6 Rows of seating served by an aisle or doorway at one end only shall have a path of travel not exceeding 30 ft (9.1 m) in length from any seat to an aisle.

16.2.5.5.6.1 The 12 in. (305 mm) minimum clear width of aisle accessway between rows of seating specified in 16.2.5.5.6, shall be increased by 3/5 in. (15 mm) for every seat over a total of seven.

16.2.5.5.6.2 The requirements of 16.2.5.5.6 and 16.2.5.5.6.1 shall not apply to smoke-protected assembly seating as permitted by 16.4.2.4 and 16.4.2.5.

16.2.5.5.7 Rows of seating utilizing tablet-arm chairs shall be permitted only if the clear width of aisle accessways complies with the requirements of 16.2.5.5 when measured under one of the following conditions:

(1) The clear width is measured with the tablet in the usable position.
(2) The clear width is measured with the tablet arm in the stored position where the tablet arm automatically returns to the stored position when raised manually to a vertical position in one motion and falls to the stored position by force of gravity.

16.2.5.5.8 The depth of seat boards shall not be less than 9 in. (230 mm) where the same level is not used for both seat boards and footboards.

16.2.5.5.9 Footboards, independent of seats, shall be provided such that there is no horizontal opening that allows the passage of a ½ in. (13 mm) diameter sphere.

16.2.5.6 Aisles Serving Seating Not at Tables.

16.2.5.6.1 General. Aisles shall be provided so that the number of seats served by the nearest aisle is in accordance with 16.2.5.5.2 through 16.2.5.5.6, unless otherwise permitted for bleachers in 16.2.5.6.2.

16.2.5.6.2 Bleachers Aisle Exemption. Aisles shall not be required in bleachers, provided that all of the following conditions are met:

(1) Egress from the front row is not obstructed by a rail, guard, or other obstruction.
(2) Row spacing is 28 in. (710 mm) or less.
(3) Rise per row, including the first row, is 6 in. (150 mm) or less.
(4) The number of rows does not exceed 16.
(5) The seat spaces are not physically defined.
(6) Seat boards that are also used as stepping surfaces for descent provide a walking surface with a minimum width of 12 in. (305 mm), and, where there is a depressed footboard, the gap between seat boards of adjacent rows does not exceed 12 in. (305 mm), measured horizontally, and the following criteria also are met:
   (a) The leading edges of the walking surfaces are provided with a contrasting marking stripe so that the location of such leading edge is readily apparent, particularly where viewed in descent, but such marking stripe is not required where bleacher surfaces and environmental conditions, under all conditions of use, are such that the location of each leading edge is readily apparent, particularly when viewed in descent.
   (b) The contrasting marking stripe is at least 1 in. (25 mm) wide and does not exceed 2 in. (51 mm) in width.

16.2.5.6.3 Dead-End Aisles. Dead-end aisles shall not exceed 20 ft (6100 mm) in length, unless otherwise permitted by the following:

(1) A dead-end aisle shall be permitted to exceed 20 ft (6100 mm) in length where seats served by the dead-end aisle are not more than 24 seats from another aisle, measured along a row of seats having a minimum clear width of 12 in. (305 mm) plus 3/5 in. (15 mm) for each additional seat over a total of 7 in the row.
(2) A 16-row dead-end aisle shall be permitted in folding and telescopic seating and grandstands.
(3) The requirement of 16.2.5.6.3 shall not apply to aisle termination as permitted by 16.4.2.7 for smoke-protected assembly seating.

16.2.5.6.4* Minimum Clear Width of Aisles. The minimum clear width of aisles shall be sufficient to provide egress capacity in accordance with 16.2.3.2 but shall be not less than the following:

(1) 48 in. (1220 mm) for stairs having seating on each side or 36 in. (915 mm) where the aisle does not serve more than 50 seats

--`,,```,,,,````-`-`,,`,,`,`,,`---

Copyright National Fire Protection Association
Provided by IHS under license with NFPA
No reproduction or networking permitted without license from IHS
Not for Resale

(2) 36 in. (915 mm) for stairs having seating on only one side
(3) 23 in. (585 mm) between a handrail and seating or a guardrail and seating where the aisle is subdivided by a handrail
(4) 42 in. (1065 mm) for level or ramped aisles having seating on both sides or 36 in. (915 mm) where the aisle does not serve more than 50 seats
(5) 36 in. (915 mm) for level or ramped aisles having seating on only one side
(6) 23 in. (585 mm) between a handrail or guardrail and seating where the aisle does not serve more than five rows on one side

16.2.5.6.5* Aisle Stairs and Ramps. The following shall apply to aisle stairs and ramps:

(1) Aisles having a gradient steeper than 1 in 20, but not steeper than 1 in 8, shall consist of a ramp.
(2) Aisles having a gradient steeper than 1 in 8 shall consist of an aisle stair.
(3) The marking stripe exemption of 16.2.5.6.10.3 shall not be permitted for aisle stairs.
(4) The limitation on height between landings in Table 11.2.2.2.1 shall not apply to aisle stairs.

16.2.5.6.6 Aisle Stair Treads. Aisle stair treads shall meet the following criteria:

(1) There shall be no variation in the depth of adjacent treads that exceeds 3⁄16 in. (4.8 mm), unless otherwise permitted by 16.2.5.6.6(2).
(2) Construction-caused nonuniformities in tread depth shall be permitted, provided that the following criteria are met:
   (a) Such nonuniformity does not exceed 3⁄8 in. (10 mm).
   (b) The aisle tread depth is 22 in. (560 mm) or greater.
(3)*Tread depth shall be not less than 11 in. (280 mm).
(4) All treads shall extend the full width of the aisle.

16.2.5.6.7 Aisle Stair Risers. Aisle stair risers shall meet the following criteria:

(1) Riser heights shall be not less than 4 in. (100 mm) in other than aisle stairs of folding and telescopic seating.
(2) The riser height of aisle stairs in folding and telescopic seating shall be permitted to be not less than 3½ in. (90 mm).
(3) Riser heights shall not exceed 8 in. (205 mm), unless otherwise permitted by 16.2.5.6.7(4) or (5).
(4) The riser height of aisle stairs in folding and telescopic seating shall be permitted to be not more than 11 in. (280 mm).
(5) Where the gradient of an aisle is steeper than 8 in. (205 mm) in rise in 11 in. (280 mm) of run for the purpose of maintaining necessary sight lines in the adjoining seating area, the riser height shall be permitted to exceed 8 in. (205 mm) but shall not exceed 9 in. (230 mm).
(6) Riser heights shall be designed to be uniform in each aisle, and the construction-caused nonuniformities shall not exceed 3⁄16 in. (4.8 mm) between adjacent risers, unless the conditions of 16.2.5.6.7(7) or (8) are met.
(7) Riser height shall be permitted to be nonuniform as follows:
   (a) Such nonuniformity shall be only for the purpose of accommodating changes in gradient necessary to maintain sight lines within a seating area, in which case the riser height shall be permitted to exceed 3⁄16 in. (4.8 mm) in any flight.
   (b) Where nonuniformities exceed 3⁄16 in. (4.8 mm) between adjacent risers, the exact location of such nonuniformities shall be indicated by a distinctive marking stripe on each tread at the nosing or leading edge adjacent to the nonuniform risers.
(8) Construction-caused nonuniformities in riser height shall be permitted to exceed 3⁄16 in. (4.8 mm) where the following are met:
   (a) The riser height shall be designed to be non-uniform.
   (b) Such construction-caused nonuniformities shall not exceed 3⁄8 in. (10 mm) where the aisle tread depth is less than 22 in. (560 mm).
   (c) Such construction-caused nonuniformities shall not exceed 3⁄4 in. (19 mm) where the aisle tread depth is 22 in. (560 mm) or greater.
   (d) Where nonuniformities exceed 3⁄16 in. (4.8 mm) between adjacent risers, the exact location of such nonuniformities shall be indicated by a distinctive marking stripe on each tread at the nosing or leading edge adjacent to the nonuniform risers.

16.2.5.6.8 Aisle Stair Profile. Aisle stairs shall comply with the following:

(1) Aisle risers shall be vertical or sloped under the tread projection at an angle not to exceed 30 degrees from vertical.
(2) Tread projection not exceeding 1½ in. (38 mm) shall be permitted.
(3) Tread projection shall be uniform in each aisle, except as otherwise permitted by 16.2.5.6.8(4).
(4) Construction-caused projection nonuniformities not exceeding ¼ in. (6.3 mm) shall be permitted.

16.2.5.6.9* Aisle Handrails.

16.2.5.6.9.1 Ramped aisles having a gradient exceeding 1 in 12 and aisle stairs shall be provided with handrails at one side or along the centerline and in accordance with 11.2.2.4.4(A) through (C).

16.2.5.6.9.2 Where there is seating on both sides of the aisle, the handrails shall be discontinuous with gaps or breaks at intervals not exceeding five rows to facilitate access to seating and to permit crossing from one side of the aisle to the other.

16.2.5.6.9.3 The gaps or breaks permitted by 16.2.5.6.9.2 shall have a clear width of not less than 22 in. (560 mm) and shall not exceed 36 in. (915 mm), measured horizontally, and the handrail shall have rounded terminations or bends.

16.2.5.6.9.4 Where handrails are provided in the middle of aisle stairs, there shall be an additional intermediate rail located approximately 12 in. (305 mm) below the main handrail.

16.2.5.6.9.5 Handrails shall not be required where otherwise permitted by the following:

(1) Handrails shall not be required for ramped aisles having a gradient not steeper than 1 in 8 and having seating on both sides where the aisle does not serve as an accessible route.
(2) The requirement for a handrail shall be satisfied by the use of a guard provided with a rail that complies with the graspability requirements for handrails and is located at a consistent height between 34 in. and 42 in. (865 mm and 1065 mm), measured as follows:
   (a) Vertically from the top of the rail to the leading edge (nosing) of stair treads
   (b) Vertically from the top of the rail to the adjacent walking surface in the case of a ramp

Copyright National Fire Protection Association
Provided by IHS under license with NFPA
No reproduction or networking permitted without license from IHS
Not for Resale

16.2.5.6.10* Aisle Marking.

16.2.5.6.10.1 A contrasting marking stripe shall be provided on each tread at the nosing or leading edge so that the location of such tread is readily apparent, particularly when viewed in descent.

16.2.5.6.10.2 The marking stripe shall be at least 1 in. (25 mm) wide and shall not exceed 2 in. (51 mm) in width.

16.2.5.6.10.3 The marking stripe shall not be required where tread surfaces and environmental conditions, under all conditions of use, are such that the location of each tread is readily apparent, particularly when viewed in descent.

16.2.5.7* Aisle Accessways Serving Seating at Tables.

16.2.5.7.1 The minimum required clear width of an aisle accessway shall be 12 in. (305 mm), where measured in accordance with 16.2.5.7.3, and increased as a function of length in accordance with 16.2.5.7.4, unless otherwise provided in 16.2.5.7.2.

16.2.5.7.2* If used by not more than four persons, there shall be no minimum clear width requirement for the portion of aisle accessway having a length not exceeding 6 ft (1830 mm) and located farthest from an aisle.

16.2.5.7.3* Where nonfixed seating is located between a table and an aisle accessway, the measurement of required clear width of the aisle accessway shall be made to a line 19 in. (485 mm), measured perpendicularly to the edge of the table, away from the edge of said table.

16.2.5.7.4* The minimum required clear width of an aisle accessway measured in accordance with 16.2.5.4.7 and 16.2.5.7.3, shall be increased beyond the 12 in. (305 mm) requirement of 16.2.5.7.1 by ½ in. (13 mm) for each additional 12 in. (305 mm), or fraction thereof, beyond 12 ft (3660 mm) of aisle accessway length, where measured from the center of the seat farthest from an aisle.

16.2.5.7.5 The path of travel along the aisle accessway shall not exceed 36 ft (11 m) from any seat to the closest aisle or egress doorway.

16.2.5.8 Aisles Serving Seating at Tables.

16.2.5.8.1* Aisles that contain steps or that are ramped, such as the aisles serving dinner theater–style configurations, shall comply with the requirements of 16.2.5.6.

16.2.5.8.2* The minimum width of aisles serving seating at tables shall be 44 in. (1120 mm) where serving an occupant load greater than 50, and 36 in. (915 mm) where serving an occupant load of 50 or fewer.

16.2.5.8.3* Where nonfixed seating is located between a table and an aisle, the measurement of required clear width of the aisle shall be made to a line 19 in. (485 mm), measured perpendicularly to the edge of the table, away from the edge of said table.

16.2.5.9 Approval of Layouts.

16.2.5.9.1 Where required by the authority having jurisdiction, plans drawn to scale showing the arrangement of furnishings or equipment shall be submitted to the authority by the building owner, manager, or authorized agent to substantiate conformance with the provisions of 16.2.5.

16.2.5.9.2 The layout plans shall constitute the only acceptable arrangement, unless one of the following criteria is met:

(1) The plans are revised.
(2) Additional plans are submitted and approved.
(3) Temporary deviations from the specifications of the approved plans are used, provided that the occupant load is not increased and the intent of 16.2.5.9 is maintained.

16.2.6 Travel Distance to Exits. Exits shall be arranged so that the total length of travel from any point to reach an exit does not exceed 200 ft (61 m) in any assembly occupancy, unless otherwise permitted by the following:

(1) The travel distance shall not exceed 250 ft (76 m) in assembly occupancies protected throughout by an approved, electrically supervised automatic sprinkler system in accordance with Section 55.3.
(2) The travel distance requirement of 16.2.6 shall not apply to smoke-protected assembly seating as permitted by 16.4.2.8 through 16.4.2.10.

16.2.7 Discharge from Exits.

16.2.7.1 Exit discharge shall comply with Section 11.7.

16.2.7.2 The level of exit discharge shall be measured at the point of principal entrance to the building.

16.2.7.3 Where the principal entrance to an assembly occupancy is via a terrace, either raised or depressed, such terrace shall be permitted to be considered to be the level of exit discharge for the purposes of the construction requirements of Chapter 7, provided that all of the following criteria are met:

(1) The terrace is at least as long (measured parallel to the building) as the total width of the exit(s) it serves, but not less than 60 in. (1525 mm) long.
(2) The terrace is at least as wide (measured perpendicularly to the building) as the exit(s) it serves, but not less than 10 ft (3050 mm) wide.
(3) Required stairs leading from the terrace to grade are protected in accordance with 11.2.2.7.3 or are a minimum of 10 ft (3050 mm) from the building.

16.2.8 Illumination of Means of Egress. Means of egress, other than for private party tents not exceeding 1200 ft^2 (112 m^2), shall be illuminated in accordance with Section 11.8.

16.2.9 Emergency Lighting. Emergency lighting, other than for private party tents not exceeding 1200 ft^2 (112 m^2), shall be provided in accordance with Section 11.9.

16.2.10 Marking of Means of Egress.

16.2.10.1 Means of egress shall be provided with signs in accordance with Section 11.10.

16.2.10.2 Exit markings shall not be required on the seating side of vomitories from seating areas where exit marking is provided in the concourse and such marking is readily apparent from the vomitories.

16.2.11 Special Means of Egress Features.

16.2.11.1 Guards and Railings.

16.2.11.1.1* Sight Line–Constrained Rail Heights. Unless subject to the requirements of 16.2.11.1.2, a fasciae or railing system complying with the guard requirements of 11.2.2.4, and having a minimum height of 26 in. (660 mm), shall be provided where the floor or footboard elevation is more than 30 in. (760 mm) above the floor or grade below and the

Copyright National Fire Protection Association
Provided by IHS under license with NFPA
No reproduction or networking permitted without license from IHS
Not for Resale

fasciae or railing system would otherwise interfere with sight lines of immediately adjacent seating.

16.2.11.1.2 Fasciae or Railing System at Foot of Aisles.

16.2.11.1.2.1 A fasciae or railing system complying with the guard requirements of 11.2.2.4 shall be provided for the full width of the aisle where the foot of the aisle is more than 30 in. (760 mm) above the floor or grade below.

16.2.11.1.2.2 The fasciae or railing shall be a minimum of 36 in. (915 mm) high and shall provide not less than 42 in. (1065 mm), measured diagonally, between the top of the rail and the nosing of the nearest tread.

16.2.11.1.3 Railing Systems at Cross Aisles. Guards and railings at cross aisles shall meet the following criteria:

(1) Cross aisles located behind seating rows shall be provided with railings not less than 26 in. (660 mm) above the adjacent floor of the aisle.
(2) The requirement of 16.2.11.1.3(1) shall not apply where the backs of seats located at the front of the aisle project 24 in. (610 mm) or more above the adjacent floor of the aisle.
(3) Where cross aisles exceed 30 in. (760 mm) above the floor or grade below, guards shall be provided in accordance with 11.2.2.4.

16.2.11.1.4 Guards at Side and Back of Seating Areas. Guards complying with the guard requirements of 11.2.2.4 shall be provided and shall be of a height not less than 42 in. (1065 mm) above the aisle, aisle accessway, or footboard where the floor elevation is more than 30 in. (760 mm) above the floor or grade to the side or back of seating.

16.2.11.1.5 Openings Below Seating. Openings between footboards and seat boards shall be provided with intermediate construction so that a 4 in. (100 mm) diameter sphere cannot pass through the opening.

16.2.11.1.6 Locations Not Requiring Guards. Guards shall not be required in the following locations:

(1) Guards shall not be required on the audience side of stages; raised platforms; and other raised floor areas such as runways, ramps, and side stages used for entertainment or presentations.
(2) Permanent guards shall not be required at vertical openings in the performance area of stages.
(3) Guards shall not be required where the side of an elevated walking surface is required to be open for the normal functioning of special lighting or for access and use of other special equipment.

16.2.11.2 Lockups. Lockups in assembly occupancies shall comply with the requirements of 21.4.5.

16.3 Protection.

16.3.1* Protection of Vertical Openings. Any vertical opening shall be enclosed or protected in accordance with Section 8.12, unless otherwise permitted by the following:

(1) Stairs or ramps shall be permitted to be unenclosed between balconies or mezzanines and main assembly areas located below, provided that the balcony or mezzanine is open to the main assembly area.
(2) Exit access stairs from lighting and access catwalks, galleries, and gridirons shall not be required to be enclosed.
(3) Assembly occupancies protected by an approved, electrically supervised automatic sprinkler system in accordance with Section 55.3 shall be permitted to have unprotected vertical openings in accordance with 8.12.4.2.

16.3.2 Hazardous Area Protection.

16.3.2.1 Service Equipment, Hazardous Operations or Processes, and Storage Facilities.

16.3.2.1.1 Rooms containing high-pressure boilers, refrigerating machinery of other than domestic refrigerator type, large transformers, or other service equipment subject to possible explosion shall not be located directly under or abutting required exits. All such rooms shall be separated from other parts of the building by fire barriers in accordance with Section 8.4 having a fire resistance rating of not less than 1 hour or shall be protected by automatic extinguishing systems in accordance with Section 55.3.

16.3.2.1.2 Rooms or spaces shall be protected in accordance with the following:

(1) Separation from the remainder of the building by fire barriers having a fire resistance rating of not less than 1 hour or protection of such rooms by automatic extinguishing systems as specified in Section 8.15 in the following areas:
    (a) Boiler and furnace rooms, unless otherwise permitted by the following:
        i. The requirement of 16.3.2.1.2 (1)(a) shall not apply to rooms enclosing furnaces, heating and air-handling equipment, or compressor equipment with a total aggregate input rating less than 200,000 Btu (211 MJ).
        ii. The rooms specified in 16.3.2.1.2(1)(a)(i) shall not be used for storage, unless otherwise protected as required.
        iii. For installations in attics, the draftstopping requirements of Section 8.14 shall apply.
    (b) Rooms or spaces used for the storage of combustible supplies in quantities deemed hazardous by the authority having jurisdiction
    (c) Rooms or spaces used for the storage of hazardous materials or flammable or combustible liquids in quantities deemed hazardous by recognized standards
(2) Separation from the remainder of the building by fire barriers having a fire resistance rating of not less than 1 hour and protection of such rooms by automatic extinguishing systems as specified in Section 8.15 in the following areas:
    (a) Laundries
    (b) Maintenance shops, including woodworking and painting areas
    (c) Rooms or spaces used for processing or use of combustible supplies deemed hazardous by the authority having jurisdiction
    (d) Rooms or spaces used for processing or use of hazardous materials or flammable or combustible liquids in quantities deemed hazardous by recognized standards
(3) Where automatic extinguishing is used to meet the requirements of 16.3.2.1.2(1) or (2), protection permitted in accordance with 55.3.1.2

Copyright National Fire Protection Association
Provided by IHS under license with NFPA
No reproduction or networking permitted without license from IHS
Not for Resale

16.3.2.2 Cooking Equipment.

16.3.2.2.1 Cooking equipment shall be protected in accordance with Section 55.10, unless otherwise permitted by the following:

(1) The requirement of 16.3.2.2.1 shall not apply to outdoor equipment.
(2) The requirement of 16.3.2.2.1 shall not apply to portable cooking equipment that is not flue connected.
(3) The requirement of 16.3.2.2.1 shall not apply to equipment used only for food warming.

16.3.2.2.2 Openings shall not be required to be protected between food preparation areas and dining areas.

16.3.3 Interior Finish.

16.3.3.1 Interior finish shall be in accordance with Chapter 10.

16.3.3.2 Interior wall and ceiling finish materials complying with Chapter 10 shall be Class A or Class B in all corridors and lobbies and shall be Class A in enclosed stairways.

16.3.3.3 Interior wall and ceiling finish materials complying with Chapter 10 shall be Class A or Class B in general assembly areas having occupant loads of more than 300 and shall be Class A, Class B, or Class C in assembly areas having occupant loads of 300 or fewer.

16.3.3.4 Screens on which pictures are projected shall comply with requirements of Class A or Class B interior finish in accordance with Chapter 10.

16.3.3.5 Interior floor finish in exit enclosures, in exit access corridors, and in spaces not separated from such enclosures and corridors by walls complying with 16.3.6 shall be not less than Class II in accordance with 10.6.4. In all other spaces, interior floor finish shall comply with 10.6.1 and 10.6.2.

16.3.4 Detection, Alarm, and Communications Systems.

16.3.4.1 General. Assembly occupancies with occupant loads greater than 300 and all theaters with more than one audience-viewing room shall be provided with an approved fire alarm system in accordance with Section 55.2 and 16.3.4.2 through 16.3.4.3.5, unless otherwise permitted by the following:

(1) Assembly occupancies that are a part of a mixed occupancy shall be permitted to be served by a common fire alarm system, provided that the individual requirements of each occupancy are met.
(2) Voice communication or public address systems complying with 16.3.4.3.4 shall not be required to comply with Section 55.2.

16.3.4.2 Initiation.

16.3.4.2.1 Initiation of the required fire alarm system shall be by manual means in accordance with 55.2.2, unless otherwise permitted by the following:

(1) The requirement of 16.3.4.2.1 shall not apply where initiation is by means of an approved automatic fire detection system in accordance with Section 55.2 that provides fire detection throughout the building.
(2) The requirement of 16.3.4.2.1 shall not apply where initiation is by means of an approved automatic sprinkler system in accordance with Section 55.3 that provides fire detection and protection throughout the building.

16.3.4.2.2 The initiating device shall be capable of transmitting an alarm to a receiving station, located within the building, that is constantly attended when the assembly occupancy is occupied.

16.3.4.2.3* In assembly occupancies with occupant loads greater than 300, automatic detection shall be provided in all hazardous areas that are not normally occupied, unless such areas are protected throughout by an approved, electrically supervised automatic sprinkler system installed in accordance with Section 55.3.

16.3.4.3 Notification.

16.3.4.3.1 The required fire alarm system shall activate an audible and visible alarm in a constantly attended receiving station within the building when occupied for purposes of initiating emergency action.

16.3.4.3.2 Positive alarm sequence in accordance with 55.2.3.4 shall be permitted.

16.3.4.3.3 Occupant notification shall be by means of visible signals and voice announcements, either live or prerecorded, initiated by the person in the constantly attended location.

16.3.4.3.4 The announcement shall be made via an approved voice communication or public address system that is provided with an emergency power source and that is audible above the ambient noise level of the assembly occupancy.

16.3.4.3.5 Where the authority having jurisdiction determines that it is impractical to have a constantly attended location, a fire alarm system in accordance with Section 55.2 shall be used that meets the following criteria:

(1) It shall be initiated by manual stations in accordance with 55.2.2 or other approved means.
(2) It shall automatically provide prerecorded evacuation instructions in accordance with 55.2.3.

16.3.5 Extinguishment Requirements.

16.3.5.1 Sprinkler Systems.

16.3.5.1.1 The following assembly occupancies shall be protected throughout by an approved, electrically supervised automatic sprinkler system in accordance with 55.3.1.1(1):

(1) Bars with live entertainment
(2) Dance halls
(3) Discotheques
(4) Nightclubs
(5) Assembly occupancies with festival seating

16.3.5.1.2 Buildings containing assembly occupancies with occupant loads greater than 300 shall be protected by an approved, electrically supervised automatic sprinkler system installed in accordance with Section 55.3 as follows:

(1) Throughout the story containing the assembly occupancy
(2) Throughout all stories below the story containing the assembly occupancy
(3) In the case of an assembly occupancy located below the level of exit discharge, throughout all stories intervening between that story and the level of exit discharge, including the level of exit discharge

16.3.5.1.3 The requirements of 16.3.5.1.2 shall not apply to the following:

(1)*Assembly occupancies consisting of a single multipurpose room of less than 12,000 ft^2 (1100 m^2) that are not used for exhibition or display and are not part of a multiple occupancy protected as a mixed occupancy

Copyright National Fire Protection Association
Provided by IHS under license with NFPA
No reproduction or networking permitted without license from IHS
Not for Resale

(2) Gymnasiums, skating rinks, and swimming pools used exclusively for participant sports with no audience facilities for more than 300 persons
(3) Locations in stadia and arenas as follows:
  (a) Over the floor area used for contest, performance, or entertainment
  (b) Over the seating areas
  (c) Over open-air concourses where an approved engineering analysis substantiates the ineffectiveness of sprinkler protection due to building height and combustible loading
(4) Areas in unenclosed stadia and arenas as follows:
  (a) Press boxes of less than 1000 ft^2 (93 m^2)
  (b) Storage facilities of less than 1000 ft^2 (93 m^2) where enclosed with not less than 1-hour fire resistance–rated construction
  (c) Enclosed areas underneath grandstands that comply with 16.4.8.5

16.3.5.1.4 Where another provision of this chapter requires an automatic sprinkler system to be electrically supervised, the sprinkler system shall be electrically supervised in accordance with 55.3.2.

16.3.5.2 Standpipes.

16.3.5.2.1 Class I standpipe systems shall be provided in buildings four or more stories in height, or having four or more basement levels, as specified in 55.4.1.

16.3.5.2.2 Class I standpipe systems shall be provided in buildings where at least one occupiable level is more than 30 ft (9.1 m) above or below the level of fire department access.

16.3.5.2.3 Class I standpipe systems shall be provided in buildings not protected throughout by an approved, electrically supervised sprinkler system in accordance with Section 55.3 where an occupiable area is more than 150 ft (45 m) from the closest point of fire department entry into the building.

16.3.5.2.4 Standpipes or hose connections shall be provided on stages in accordance with 16.4.5.10.

16.3.5.3 Portable Fire Extinguishers. Portable fire extinguishers shall be installed in assembly occupancies in accordance with Section 55.6, unless otherwise permitted by the following:

(1) The requirement of 16.3.5.3 shall not apply to seating areas.
(2) The requirement of 16.3.5.3 shall not apply to floor areas used for contests, performances, or entertainment.
(3) The requirement of 16.3.5.3 shall not apply to outside assembly occupancy areas.
(4) Portable extinguishers shall be permitted to be located in secure locations accessible to staff.

16.3.6 Corridors. Interior corridors and lobbies shall be constructed in accordance with Section 8.4 and 11.1.3.1, unless otherwise permitted by the following:

(1) Corridor and lobby protection shall not be required where assembly rooms served by the corridor or lobby have at least 50 percent of their exit capacity discharging directly to the outside, independent of corridors and lobbies.
(2) Corridor and lobby protection shall not be required in buildings protected throughout by an approved, electrically supervised automatic sprinkler system installed in accordance with Section 55.3.
(3) Lobbies serving only one assembly area that meet the requirements for intervening rooms *(see 11.5.1.7)* shall not be required to have a fire resistance rating.
(4) Where the corridor ceiling is an assembly having a 1-hour fire resistance rating where tested as a wall, the corridor walls shall be permitted to terminate at the corridor ceiling.
(5) Corridor and lobby protection shall not be required in buildings protected throughout by an approved, total (complete) coverage smoke detection system *(see 55.2.2.3)* that provides occupant notification and is installed in accordance with Section 55.2.

16.4 Special Provisions.

16.4.1 Life Safety Evaluation.

16.4.1.1* Where a life safety evaluation is required by other provisions of the *Code*, it shall be done by persons acceptable to the authority having jurisdiction. The life safety evaluation shall include a written assessment of safety measures for conditions listed in 16.4.1.2. The life safety evaluation shall be approved annually by the authority having jurisdiction and shall be updated for special or unusual conditions.

16.4.1.2 Life safety evaluations shall include an assessment of the following conditions and the related appropriate safety measures:

(1) Nature of the events and the participants and attendees
(2) Access and egress movement, including crowd density problems
(3) Medical emergencies
(4) Fire hazards
(5) Permanent and temporary structural systems
(6) Severe weather conditions
(7) Earthquakes
(8) Civil or other disturbances
(9) Hazardous materials incidents within and near the facility
(10) Relationships among facility management, event participants, emergency response agencies, and others having a role in the events accommodated in the facility

16.4.1.3* Life safety evaluations shall include assessments of both building systems and management features upon which reliance is placed for the safety of facility occupants. Such assessments shall consider scenarios appropriate to the facility.

16.4.2* Smoke-Protected Assembly Seating.

16.4.2.1 To be considered smoke protected, an assembly seating facility shall comply with the following:

(1) All enclosed areas with walls and ceilings in buildings or structures containing smoke-protected assembly seating shall be protected with an approved, electrically supervised automatic sprinkler system installed in accordance with Section 55.3.
(2) The requirement of 16.4.2.1(1) shall not apply to the floor area used for contests, performances, or entertainment, provided that the roof construction is more than 50 ft (15 m) above the floor level and use is restricted to low fire hazard uses.
(3)*Sprinklers, as specified in 16.4.2.1(1), shall not be required over the floor area used for contests, performances, or entertainment and over the seating areas where an approved engineering analysis substantiates the ineffectiveness of sprinkler protection due to building height and combustible loading.

Copyright National Fire Protection Association
Provided by IHS under license with NFPA
No reproduction or networking permitted without license from IHS
Not for Resale

(4) All means of egress serving a smoke-protected assembly seating area shall be provided with smoke-actuated ventilation facilities or natural ventilation designed to maintain the level of smoke at least 6 ft (1.8 m) above the floor of the means of egress.

16.4.2.2 For facilities to utilize the provisions of smoke-protected assembly seating, a life safety evaluation shall be done in accordance with 16.4.1.

16.4.2.3 Minimum clear widths of aisles and other means of egress serving smoke-protected assembly seating shall be in accordance with Table 16.4.2.3. In Table 16.4.2.3, the number of seats specified shall be within a single assembly space, and interpolation shall be permitted between the specific values shown. A single assembly space shall be permitted to have multiple levels, floors, or mezzanines. The minimum clear widths shown shall be modified in accordance with all of the following:

(1) If risers exceed 7 in. in height, the stair width in the table shall be multiplied by factor *A*, where *A* equals the following:

$$A = 1 + \frac{\text{riser height} - 7}{5}$$

(2) If risers exceed 178 mm in height, the stair width in the table shall be multiplied by factor *A*, where *A* equals the following:

$$A = 1 + \frac{\text{riser height} - 178}{125}$$

(3) Stairs not having a handrail within a 30 in. (760 mm) horizontal distance shall be 25 percent wider than otherwise calculated; that is, their width shall be multiplied by factor *B*, where *B* equals the following:

$$B = 1.25$$

(4) Ramps steeper than 1 in 10 slope where used in ascent shall have their width increased by 10 percent; that is, their width shall be multiplied by factor *C*, where *C* equals the following:

$$C = 1.10$$

16.4.2.4 Where smoke-protected assembly seating conforms to the requirements of 16.4.2, for rows of seats served by aisles or doorways at both ends, there shall be not more than 100 seats per row, and the minimum clear width of 12 in. (305 mm) for aisle accessways shall be increased by 3/10 in. (7.6 mm) for every additional seat beyond the number stipulated in Table 16.4.2.4, but the minimum clear width shall not be required to exceed 22 in. (560 mm).

16.4.2.5 Where smoke-protected assembly seating conforms to the requirements of 16.4.2, for rows of seats served by an aisle or doorway at one end only, the aisle accessway minimum clear width of 12 in. (305 mm) shall be increased by 3/5 in. (15 mm) for every additional seat beyond the number stipulated in Table 16.4.2.4, but the minimum clear width shall not be required to exceed 22 in. (560 mm).

16.4.2.6 Smoke-protected assembly seating conforming with the requirements of 16.4.2 shall be permitted to have a common path of travel of 50 ft (15 m) from any seat to a point where a person has a choice of two directions of egress travel.

16.4.2.7 Where smoke-protected assembly seating conforms to the requirements of 16.4.2, the dead ends in aisle stairs shall not exceed a distance of 21 rows, unless both of the following criteria are met:

(1) The seats served by the dead-end aisle are not more than 40 seats from another aisle.
(2) The 40-seat distance is measured along a row of seats having an aisle accessway with a minimum clear width of 12 in. (305 mm) plus 3/10 in. (7.6 mm) for each additional seat above 7 in the row.

16.4.2.8 Where smoke-protected assembly seating conforms to the requirements of 16.4.2, the travel distance from each seat to the nearest entrance to an egress vomitory portal or egress concourse shall not exceed 400 ft (122 m).

16.4.2.9 Where smoke-protected assembly seating conforms to the requirements of 16.4.2, the travel distance from the entrance to a vomitory portal or from an egress concourse to an approved egress stair, ramp, or walk at the building exterior shall not exceed 200 ft (61 m).

16.4.2.10 The travel distance requirements of 16.4.2.8 and 16.4.2.9 shall not apply to outdoor assembly seating facilities of Type I or Type II construction where all portions of the means of egress are essentially open to the outside.

Table 16.4.2.3 Capacity Factors for Smoke-Protected Assembly Seating

Number of Seats	Clear Width per Seat Served: Stairs in.	Stairs mm	Passageways, Ramps, and Doorways in.	Passageways, Ramps, and Doorways mm
2,000	0.300 *AB*	7.6 *AB*	0.220 *C*	5.6 *C*
5,000	0.200 *AB*	5.1 *AB*	0.150 *C*	3.8 *C*
10,000	0.130 *AB*	3.3 *AB*	0.100 *C*	2.5 *C*
15,000	0.096 *AB*	2.4 *AB*	0.070 *C*	1.8 *C*
20,000	0.076 *AB*	1.9 *AB*	0.056 *C*	1.4 *C*
≥25,000	0.060 *AB*	1.5 *AB*	0.044 *C*	1.1 *C*

Table 16.4.2.4 Smoke-Protected Assembly Seating Aisle Accessways

Total Number of Seats in Space	Number of Seats per Row Permitted to Have Minimum 12 in. (305 mm) Clear Width Aisle Accessway: Aisle or Doorway at Both Ends of Row	Aisle or Doorway at One End of Row
<4,000	14	7
4,000–6,999	15	7
7,000–9,999	16	8
10,000–12,999	17	8
13,000–15,999	18	9
16,000–18,999	19	9
19,000–21,999	20	10
≥22,000	21	11

Copyright National Fire Protection Association
Provided by IHS under license with NFPA
No reproduction or networking permitted without license from IHS
Not for Resale

16.4.3 Limited Access or Underground Buildings.

16.4.3.1 Limited access or underground buildings shall comply with 16.4.3.2 through 16.4.3.5.

16.4.3.2 Underground buildings or portions of buildings having a floor level more than 30 ft (9.1 m) below the level of exit discharge shall comply with the requirements of 16.4.3.3 through 16.4.3.5, unless otherwise permitted by the following:

(1) The requirement of 16.4.3.2 shall not apply to areas within buildings used only for service to the building, such as boiler/heater rooms, cable vaults, and dead storage.
(2) The requirement of 16.4.3.2 shall not apply to auditoriums without intervening occupiable levels.

16.4.3.3 Each level more than 30 ft (9.1 m) below the level of exit discharge shall be divided into not less than two smoke compartments by a smoke barrier complying with Section 8.11 and having a 1-hour fire resistance rating.

16.4.3.3.1 Each smoke compartment shall have access to at least one exit without passing through the other required compartment. Any doors connecting required compartments shall be tight-fitting, minimum 1-hour-rated fire door assemblies designed and installed to minimize smoke leakage and to close and latch automatically upon detection of smoke.

16.4.3.3.2 Each smoke compartment shall be provided with a mechanical means of moving people vertically, such as an elevator or escalator.

16.4.3.3.3 Each smoke compartment shall have an independent air supply and exhaust system capable of smoke control or smoke exhaust functions. The systems shall be designed in accordance with 55.7.1. These systems shall be in accordance with NFPA 92A, *Standard for Smoke-Control Systems Utilizing Barriers and Pressure Differences*, or NFPA 92B, *Standard for Smoke Management Systems in Malls, Atria, and Large Spaces*.

16.4.3.3.4 Each smoke compartment shall be provided with an automatic smoke detection system throughout. The system shall be designed such that the activation of any two detectors causes the smoke control system to operate and the building voice alarm to sound.

16.4.3.4 Any required smoke control or exhaust system shall be provided with a standby power system complying with Article 701 of NFPA 70, *National Electrical Code*.

16.4.3.5 The building shall be provided with an approved, supervised voice alarm system in accordance with Section 55.2. The voice alarm system shall comply with 55.2.3. A prerecorded evacuation message shall be provided.

16.4.4 High-Rise Buildings. High-rise assembly occupancy buildings and high-rise mixed occupancy buildings that house assembly occupancies in the high-rise portions of the building shall comply with Chapter 33.

16.4.5 Stages and Platforms.

16.4.5.1 Platform Construction. Temporary platforms shall be permitted to be constructed of any materials. The space between the floor and the platform above shall not be used for any purpose other than electrical wiring to platform equipment.

16.4.5.1.1 Permanent platforms shall be constructed of materials as follows:

(1) Materials as required for the type of construction of the building in which the permanent platform is located shall be permitted.
(2) Materials of fire-retardant-treated wood for platforms in accordance with 7.2.3.2.7 and 7.2.3.2.8 shall be permitted.
(3) The finished floor shall be permitted to be of wood in all types of construction.

16.4.5.1.2 Where the space beneath the platform is used for storage or any purpose other than equipment wiring or plumbing, the floor shall not be of less than 1-hour fire-resistive construction.

16.4.5.2 Stage Construction.

16.4.5.2.1 Regular stages shall be constructed of materials as required for the type of construction of the building in which they are located. In all cases, the finished floor shall be permitted to be of wood.

16.4.5.2.2 Legitimate stages shall be constructed of materials required for Type I buildings, except that the area extending from the proscenium opening to the back wall of the stage, and for a distance of 6 ft (1830 mm) beyond the proscenium opening on each side, shall be permitted to be constructed of steel or heavy timber covered with a wood floor not less than 1½ in. (38 mm) in actual thickness.

16.4.5.2.3 Openings through stage floors (traps) shall be equipped with tight-fitting trap doors of wood that have approved safety locks and an actual thickness of not less than 1½ in. (38 mm). Other materials for such trap doors shall be acceptable where they provide fire and heat resistance equivalent to that of the wooden doors specified in this paragraph.

16.4.5.3 Accessory Rooms.

16.4.5.3.1 Workshops, storerooms, permanent dressing rooms, and other accessory spaces contiguous to stages shall be separated from each other and other building areas by 1-hour fire resistance–rated construction and protected openings.

16.4.5.3.2 The separation requirements of 16.4.5.3.1 shall not be required for stages having a floor area not exceeding 1000 ft^2 (93 m^2).

16.4.5.4 Ventilators. Regular stages greater than 1000 ft^2 (93 m^2) and legitimate stages shall be provided with emergency ventilation to provide a means of removing smoke and combustion gases directly to the outside in the event of a fire. Ventilation shall be by one or a combination of the methods specified in 16.4.5.4.1 through 16.4.5.4.3.

16.4.5.4.1 Smoke Control.

16.4.5.4.1.1 A means shall be provided to maintain the smoke level at not less than 6 ft (1830 mm) above the highest level of assembly seating or above the top of the proscenium opening where a proscenium wall and opening protection are provided.

16.4.5.4.1.2 The smoke control system shall be activated independently by each of the following:

(1) Activation of the sprinkler system in the stage area
(2) Activation of smoke detectors over the stage area
(3) Operation of a manual switch at an approved location

16.4.5.4.1.3 The emergency ventilation system shall be supplied by both normal and standby power.

16.4.5.4.1.4 The fan power wiring and ducts shall be located and properly protected to ensure a minimum of 20 minutes of operation in the event of activation.

Copyright National Fire Protection Association
Provided by IHS under license with NFPA
No reproduction or networking permitted without license from IHS
Not for Resale

16.4.5.4.2 Roof Vents.

16.4.5.4.2.1 Two or more vents shall be located near the center of, and above the highest part of, the stage area.

16.4.5.4.2.2 The vents shall be raised above the roof and shall provide a net free ventilation area equal to 5 percent of the stage area.

16.4.5.4.2.3 Vents shall be constructed to open automatically by approved heat-activated devices.

16.4.5.4.2.4 Supplemental means shall be provided for manual operation and periodic testing of the ventilator from the stage floor.

16.4.5.4.2.5 Vents shall be labeled.

16.4.5.4.3 Other Means. Approved, alternate means of removing smoke and combustion gases shall be permitted.

16.4.5.5 Proscenium Walls. Legitimate stages shall be completely separated from the seating area by a proscenium wall of not less than 2-hour fire-resistive noncombustible or limited-combustible construction.

16.4.5.5.1 The proscenium wall shall extend at least 48 in. (1220 mm) above the roof of the auditorium in combustible construction.

16.4.5.5.2 The main proscenium opening used for viewing performances shall be provided with an automatic-closing fire-resistive curtain, as described in 16.4.5.6.

16.4.5.5.3 All openings in the proscenium wall of a legitimate stage, other than the main proscenium opening protected by the fire-resistive curtain required by 16.4.5.5.2, shall be protected by a fire assembly having a 1½-hour fire protection rating.

16.4.5.5.4 Proscenium walls shall not be required in smoke-protected assembly seating facilities constructed and operated in accordance with 16.4.2.

16.4.5.6 Proscenium Opening Protection. Where required by 16.4.5.5, the proscenium opening shall be protected by a fire curtain or an approved water curtain complying with NFPA 13, *Standard for the Installation of Sprinkler Systems*.

16.4.5.6.1 The fire curtain or water curtain shall be designed to activate upon automatic detection of a fire and upon manual activation.

16.4.5.6.2 A fire curtain shall be a listed opening-protective assembly or shall be constructed as described in 16.4.5.6.2.1 through 16.4.5.6.2.5.

16.4.5.6.2.1 Fabrics.

(A) Curtains shall be made of one or more thicknesses of a noncombustible or limited-combustible fabric, or a fabric with a noncombustible base material, that shall be permitted to be given a coating, provided that the modified fabric meets the criteria of 16.4.5.6.2.

(B) Curtain fabrics shall have a minimum weight of 2⅜ lb/yd^2 (1.3 kg/m^2).

16.4.5.6.2.2 Tensile Strength Requirements. Curtain fabric shall have minimum tensile strength requirements of 400 lbf/in. (70 N/mm) in both the warp and fill directions.

16.4.5.6.2.3 Wire-Insertion Reinforcement Requirements.

(A) The fabric shall be reinforced with noncorrosive wire intertwined with the base fiber at a minimum rate of one wire per yarn.

(B) Wire shall not be required, and fabric weight shall be permitted to be less than 2⅜ lb/yd^2 (1.3 kg/m^2) if it can be substantiated by approved tests that such fabric is equivalent in strength and durability.

16.4.5.6.2.4 Fire Test. A sample curtain with a minimum of two vertical seams shall be subjected to the standard fire test specified in NFPA 251, *Standard Methods of Tests of Fire Endurance of Building Construction and Materials*, or ASTM E 119, *Standard Test Methods for Fire Tests of Building Construction and Materials*, as applicable to nonbearing walls and partitions for a period of 30 minutes.

(A) The curtain shall overlap the furnace edges by an amount that is appropriate to seal the top and sides.

(B) The curtain shall have a bottom pocket containing a minimum of 4 lb/linear ft (5 kg/linear m) of batten.

(C) The unexposed surface of the curtain shall not glow, and neither flame nor smoke shall penetrate the curtain during the test period.

(D) Unexposed surface temperature and hose stream test requirements shall not be applicable to the proscenium fire safety curtain test.

16.4.5.6.2.5 Smoke Test. Curtain fabrics shall have a smoke density of not greater than 25 where tested in accordance with NFPA 255, *Standard Method of Test of Surface Burning Characteristics of Building Materials*, ASTM E 84, *Standard Test Method of Surface Burning Characteristics of Building Materials*, or UL 723, *Standard for Test for Surface Burning Characteristics of Building Materials*. The curtain fabric shall be tested in the condition in which it is to be used.

16.4.5.6.3 The complete installation of every proscenium curtain shall be subjected to operating tests, and any theater in which a proscenium curtain is placed shall not be open to public performance until after the proscenium curtain has been accepted and approved by the authority having jurisdiction.

16.4.5.6.4 The curtain shall be kept in the normally closed position when each day's performances are completed.

16.4.5.6.5 The curtain shall be automatic-closing without the use of applied power.

16.4.5.6.6 The curtain also shall be capable of manual operation.

16.4.5.7 Gridiron, Fly Galleries, and Pinrails.

16.4.5.7.1 Structural framing designed only for the attachment of portable or fixed theater equipment, gridirons, galleries, and catwalks shall be constructed of materials consistent with the building type of construction, and a fire resistance rating shall not be required.

16.4.5.7.2 Fire-retardant-treated wood shall be permitted for fly galleries and pinrails of all types of construction.

16.4.5.7.3 Combustible materials shall be permitted for use as floors of galleries and catwalks of all types of construction.

16.4.5.8 Catwalks. The minimum clear width of lighting and access catwalks and the means of egress from galleries and gridirons shall be 22 in. (560 mm).

16.4.5.9 Fire Protection. Every stage shall be protected by an approved, electrically supervised automatic sprinkler system installed in compliance with Section 55.3.

--`,,```,,,,````-`-`,,`,,`,`,,`---

Copyright National Fire Protection Association
Provided by IHS under license with NFPA
No reproduction or networking permitted without license from IHS

Not for Resale

16.4.5.9.1 Protection shall be provided throughout the stage and in storerooms, workshops, permanent dressing rooms, and other accessory spaces contiguous to such stages.

16.4.5.9.2 Sprinklers shall not be required for stages of 1000 ft^2 (93 m^2) or less and of 50 ft (15 m) or less in height where the following criteria are met:

(1) Curtains, scenery, or other combustible hangings are not retractable vertically.
(2) Combustible hangings are limited to borders, legs, a single main curtain, and a single backdrop.

16.4.5.9.3 Sprinklers shall not be required under stage areas less than 48 in. (1220 mm) in clear height used exclusively for chair or table storage and lined on the inside with ⅝ in. (16 mm) Type X gypsum wallboard or an approved equivalent.

16.4.5.10* Standpipes or Hose Connections. Regular stages over 1000 ft^2 (93 m^2) in area and all legitimate stages shall be equipped with 1½ in. (38 mm) hose lines for first aid fire fighting at each side of the stage. Hose connections shall be in accordance with NFPA 13, unless Class II or Class III standpipes in accordance with NFPA 14, *Standard for the Installation of Standpipe and Hose Systems*, are used.

16.4.6 Projection Rooms.

16.4.6.1 Projection rooms shall comply with 16.4.6.2 through 16.4.6.8. Where cellulose nitrate film is used, the projection room shall comply with NFPA 40, *Standard for the Storage and Handling of Cellulose Nitrate Film.*

16.4.6.2 Film or video projectors or spotlights utilizing light sources that produce particulate matter, or toxic gases or light sources that produce hazardous radiation without protective shielding, shall be located within a projection room complying with 16.3.2.1.2.

16.4.6.3 Every projection room shall be of permanent construction consistent with the construction requirements for the type of building in which the projection room is located.

16.4.6.3.1 Openings shall not be required to be protected.

16.4.6.3.2 The room shall have a floor area of not less than 80 ft^2 (7.4 m^2) for a single machine and not less than 40 ft^2 (3.7 m^2) for each additional machine.

16.4.6.3.3 Each motion picture projector, floodlight, spotlight, or similar piece of equipment shall have a clear working space of not less than 30 in. (760 mm) on each side and at its rear, but only one such space shall be required between adjacent projectors.

16.4.6.3.4 The projection room and the rooms appurtenant to it shall have a ceiling height of not less than 7 ft 6 in. (2285 mm).

16.4.6.4 Each projection room shall have at least one outswinging, self-closing door not less than 30 in. (760 mm) wide and 6 ft 8 in. (2030 mm) high.

16.4.6.5 The aggregate of ports and openings for projection equipment shall not exceed 25 percent of the area of the wall between the projection room and the auditorium. All openings shall be provided with glass or other approved material so as to completely close the opening.

16.4.6.6 Projection room ventilation shall not be less than that described in 16.4.6.6.1 and 16.4.6.6.2.

16.4.6.6.1 Supply Air.

16.4.6.6.1.1 Each projection room shall be provided with adequate air supply inlets arranged to provide well-distributed air throughout the room.

16.4.6.6.1.2 Air inlet ducts shall provide an amount of air equivalent to the amount of air being exhausted by projection equipment.

16.4.6.6.1.3 Air shall be permitted to be taken from the outside; from adjacent spaces within the building, provided that the volume and infiltration rate is sufficient; or from the building air-conditioning system, provided that it is arranged to supply sufficient air, regardless of whether other systems are in operation.

16.4.6.6.2 Exhaust Air.

16.4.6.6.2.1 Projection booths shall be permitted to be exhausted through the lamp exhaust system.

16.4.6.6.2.2 The lamp exhaust system shall be positively interconnected with the lamp, so that the lamp will not operate unless there is sufficient airflow required for the lamp.

16.4.6.6.2.3 Exhaust air ducts shall terminate at the exterior of the building in such a location that the exhaust air cannot be readily recirculated into any air supply system.

16.4.6.6.2.4 The projection room ventilation system shall be permitted to also serve appurtenant rooms, such as the generator room and the rewind room.

16.4.6.7 Each projection machine shall be provided with an exhaust duct that will draw air from each lamp and exhaust it directly to the outside of the building, and the following shall apply:

(1) The lamp exhaust shall be permitted to exhaust air from the projection room to provide room air circulation.
(2) Such ducts shall be of rigid materials, except for a flexible connector approved for the purpose.
(3) The projection lamp and projection room exhaust systems shall be permitted to be combined but shall not be interconnected with any other exhaust or return-air system within the buildings.

16.4.6.7.1 Electric Arc Projection Equipment.

16.4.6.7.1.1 The exhaust capacity shall be 200 ft^3/min (0.09 m^3/s) for each lamp connected to the lamp exhaust system, or as recommended by the equipment manufacturer.

16.4.6.7.1.2 Auxiliary air shall be permitted to be introduced into the system through a screened opening to stabilize the arc.

16.4.6.7.2 Xenon Projection Equipment. The lamp exhaust system shall exhaust not less than 300 ft^3/min (0.14 m^3/s) per lamp, or not less than that exhaust volume required or recommended by the equipment manufacturer, whichever is greater.

16.4.6.8 Miscellaneous equipment and storage shall be protected as follows:

(1) Each projection room shall be provided with rewind and film storage facilities.
(2) A maximum of four containers for flammable liquids of not greater than 16 oz (0.5 L) capacity and of a nonbreakable type shall be permitted in each projection booth.

Copyright National Fire Protection Association
Provided by IHS under license with NFPA
No reproduction or networking permitted without license from IHS
Not for Resale

(3) Appurtenant electrical equipment, such as rheostats, transformers, and generators, shall be permitted to be located within the booth or in a separate room of equivalent construction.

16.4.7* Special Amusement Buildings.

16.4.7.1* General. Special amusement buildings, regardless of occupant load, shall meet the requirements for assembly occupancies in addition to the requirements of 16.4.7, unless the special amusement building is a multilevel play structure that is not more than 10 ft (3050 mm) in height and has aggregate horizontal projections not exceeding 160 ft^2 (15 m^2).

16.4.7.2* Automatic Sprinkler Protection. Every special amusement building, other than buildings or structures not exceeding 10 ft (3050 mm) in height and not exceeding 160 ft^2 (15 m^2) in aggregate horizontal projection, shall be protected throughout by an approved, electrically supervised automatic sprinkler system installed and maintained in accordance with Section 55.3.

16.4.7.3 Water Supply for Movable or Portable Buildings. Where the special amusement building required to be sprinklered by 16.4.7.2 is movable or portable, the sprinkler water supply shall be permitted to be provided by an approved temporary means.

16.4.7.4 Smoke Detection and Alarm Systems. Where the nature of the special amusement building is such that it operates in reduced lighting levels, the building shall be protected throughout by an approved automatic smoke detection system in accordance with Section 55.2.

16.4.7.5 Alarm Initiation. Actuation of any smoke detection system device shall sound an alarm at a constantly attended location on the premises.

16.4.7.6 Illumination, Sounds, and Visuals. Actuation of the automatic sprinkler system, or any other suppression system, or actuation of a smoke detection system having an approved verification or cross-zoning operation capability shall cause the following:

(1) Increase illumination in the means of egress to that required by Section 11.8
(2) Stop any conflicting or confusing sounds and visuals

16.4.7.7 Exit Marking.

16.4.7.7.1 Exit marking shall be in accordance with Section 11.10.

16.4.7.7.2 Exit marking in mobile special amusement buildings shall be of the luminescent, self-luminous, or electroluminescent type.

16.4.7.7.3* Floor proximity exit signs shall be provided in accordance with 11.10.1.5.

16.4.7.7.4 In special amusement buildings where mazes, mirrors, or other designs are used to confound the egress path, approved directional exit marking that will become apparent in an emergency shall be provided.

16.4.7.8 Interior Finish. Interior finish shall be Class A throughout in accordance with Chapter 10.

16.4.8 Grandstands.

16.4.8.1 General. Grandstands shall comply with the provisions of this chapter, as modified by 16.4.8 and Section 32.7.

16.4.8.2 Seating.

16.4.8.2.1 Where grandstand seating without backs is used indoors, rows of seats shall be spaced not less than 22 in. (560 mm) back-to-back.

16.4.8.2.2 The depth of footboards and seat boards in grandstands shall be not less than 9 in. (230 mm). Where the same level is not used for both seat foundations and footrests, footrests independent of seats shall be provided.

16.4.8.2.3 Seats and footrests of grandstands shall be supported securely and fastened in such a manner that they cannot be displaced inadvertently.

16.4.8.2.4 Individual seats or chairs shall be permitted only if secured in rows in an approved manner, unless the seats do not exceed 16 in number and are located on level floors and within railed-in enclosures, such as boxes.

16.4.8.2.5 The maximum number of seats permitted between the farthest seat and an aisle in grandstands and bleachers shall not exceed that shown in Table 16.4.8.2.5.

Table 16.4.8.2.5 Maximum Number of Seats Permitted Between Farthest Seat and an Aisle

Application	Outdoors	Indoors
Grandstands	11	6
Bleachers *(See 16.2.5.6.2.)*	20	9

16.4.8.3 Special Requirements—Wood Grandstands.

16.4.8.3.1 An outdoor wood grandstand shall be erected not less than two-thirds of its height and, in no case, within not less than 10 ft (3050 mm) of a building, unless otherwise permitted by the following:

(1) The distance requirement shall not apply to buildings of not less than 1-hour fire resistance–rated construction with openings protected against the fire exposure hazard created by the grandstand.
(2) The distance requirement shall not apply where a wall of not less than 1-hour fire resistance–rated construction separates a wood grandstand from the building.

16.4.8.3.2 An outdoor wood grandstand unit shall not exceed 10,000 ft^2 (929 m^2) in ground area or 200 ft (61 m) in length, and the following requirements also shall apply:

(1) Grandstand units of the maximum size shall be placed not less than 20 ft (6100 mm) apart or shall be separated by walls with not less than a 1-hour fire resistance rating.
(2) The number of grandstand units erected in any one group shall not exceed three.
(3) Each group of grandstand units shall be separated from any other group by a wall of 2-hour fire resistance–rated construction extending 24 in. (610 mm) above the seat platforms or by an open space of not less than 50 ft (15 m).

16.4.8.3.3 The ground area or length required by 16.4.8.3.2 shall be permitted to be doubled where one of the following criteria is met:

(1) Where the grandstand is constructed entirely of labeled fire-retardant-treated wood that has passed the standard

--`,,```,,,,````-`-`,,`,,`,`,,`---

Copyright National Fire Protection Association
Provided by IHS under license with NFPA
No reproduction or networking permitted without license from IHS

Not for Resale

rain test of ASTM D 2898, *Standard Test Methods for Accelerated Weathering of Fire-Retardant-Treated Wood for Fire Testing*

(2) Where the grandstand is constructed of members conforming to dimensions for heavy timber construction [Type IV (2HH)]

16.4.8.3.4 The highest level of seat platforms above the ground or the surface at the front of the grandstand for any wood grandstand shall not exceed 20 ft (6100 mm).

16.4.8.3.5 The highest level of seat platforms above the ground or the surface at the front of a portable grandstand within a tent or membrane structure shall not exceed 12 ft (3660 mm).

16.4.8.3.6 The height requirements specified in 16.4.8.3.4 and 16.4.8.3.5 shall be permitted to be doubled where one of the following criteria is met:

(1) Where the grandstand is constructed entirely of labeled fire-retardant-treated wood that has passed the standard rain test of ASTM D 2898

(2) Where the grandstand is constructed of members conforming to dimensions for heavy timber construction [Type IV (2HH)]

16.4.8.4 Special Requirements—Portable Grandstands.

16.4.8.4.1 Portable grandstands shall conform to the requirements of 16.4.8 for grandstands and the requirements of 16.4.8.4.2 and 16.4.8.4.3.

16.4.8.4.2 Portable grandstands shall be self-contained and shall have within them all necessary parts to withstand and restrain all forces that might develop during human occupancy. They shall be designed and manufactured so that, if any structural members essential to the strength and stability of the structure have been omitted during erection, the presence of unused connection fittings shall make the omissions self-evident. The construction shall be skillfully accomplished to produce the strength required by the design.

16.4.8.4.3 Portable grandstands shall be provided with base plates, sills, floor runners, or sleepers of such area that the permitted bearing capacity of the supporting material is not exceeded. Where portable grandstands rest directly on a base of such character that it is incapable of supporting the load without appreciable settlement, mud sills of suitable material, having sufficient area to prevent undue or dangerous settlement, shall be installed under base plates, runners, or sleepers. All bearing surfaces shall be in contact with each other.

16.4.8.5 Spaces Underneath Grandstands. Spaces underneath a grandstand shall be kept free of flammable or combustible materials, unless protected by an approved, electrically supervised automatic sprinkler system in accordance with Section 55.3, unless otherwise permitted by the following:

(1) This requirement shall not apply to accessory uses of 300 ft^2 (27.9 m^2) or less, such as ticket booths, toilet facilities, or concession booths where constructed of noncombustible, limited-combustible, or fire-resistive construction, in otherwise nonsprinklered facilities.

(2) This requirement shall not apply to rooms that are enclosed in not less than 1-hour fire resistance–rated construction, and are less than 1000 ft^2 (93 m^2), in otherwise nonsprinklered facilities.

16.4.8.6 Guards and Railings.

16.4.8.6.1 Railings or guards not less than 42 in. (1065 mm) above the aisle surface or footrest, or not less than 36 in. (915 mm) vertically above the center of the seat or seat board surface, whichever is adjacent, shall be provided along those portions of the backs and ends of all grandstands where the seats are more than 48 in. (1220 mm) above the floor or ground.

16.4.8.6.2 The requirement of 16.4.8.6.1 shall not apply where an adjacent wall or fence affords equivalent safeguard.

16.4.8.6.3 Where the front footrest of any grandstand or folding or telescopic seating is more than 24 in. (610 mm) above the floor, railings or guards not less than 33 in. (825 mm) above such footrests shall be provided.

16.4.8.6.4 The railings required by 16.4.8.6.3 shall be permitted to be not less than 26 in. (660 mm) high in grandstands or where the front row of seats includes backrests.

16.4.8.6.5 Cross aisles located within the seating area shall be provided with rails not less than 26 in. (660 mm) high along the front edge of the cross aisle.

16.4.8.6.6 The railings specified in 16.4.8.6.5 shall not be required where the backs of the seats in front of the cross aisle project 24 in. (610 mm) or more above the surface of the cross aisle.

16.4.8.6.7 Vertical openings between guardrails and footboards or seat boards shall be provided with intermediate construction so that a 4 in. (100 mm) diameter sphere cannot pass through the opening.

16.4.8.6.8 An opening between the seat board and footboard located more than 30 in. (760 mm) above grade shall be provided with intermediate construction so that a 4 in. (100 mm) diameter sphere cannot pass through the opening.

16.4.9 Folding and Telescopic Seating.

16.4.9.1 General. Folding and telescopic seating shall comply with the provisions of this chapter, as modified by 16.4.9 and Section 32.7.

16.4.9.2 Seating.

16.4.9.2.1 The horizontal distance of seats, measured back-to-back, shall be not less than 22 in. (560 mm) for seats without backs. There shall be a space of not less than 12 in. (305 mm) between the back of each seat and the front of each seat immediately behind it. If seats are of the chair type, the 12 in. (305 mm) dimension shall be measured to the front edge of the rear seat in its normal, unoccupied position. All measurements shall be taken between plumb lines.

16.4.9.2.2 The depth of footboards (footrests) and seat boards in folding and telescopic seating shall be not less than 9 in. (230 mm). Where the same level is not used for both seat foundations and footrests, footrests independent of seats shall be provided.

16.4.9.2.3 Individual chair-type seats shall be permitted in folding and telescopic seating only if firmly secured in groups of not less than three.

16.4.9.2.4 The maximum number of seats permitted between the furthest seat and an aisle in folding and telescopic seating shall not exceed that shown in Table 16.4.8.2.5.

16.4.9.3 Guards and Railings.

16.4.9.3.1 Railings or guards not less than 42 in. (1065 mm) above the aisle surface or footrest, or not less than 36 in. (915 mm) vertically above the center of the seat or seat board

--`,,```,,,,````-`-`,,`,,`,`,,`---

Copyright National Fire Protection Association
Provided by IHS under license with NFPA
No reproduction or networking permitted without license from IHS
Not for Resale

surface, whichever is adjacent, shall be provided along those portions of the backs and ends of all folding and telescopic seating where the seats are more than 48 in. (1220 mm) above the floor or ground.

16.4.9.3.2 The requirement of 16.4.9.3.1 shall not apply where an adjacent wall or fence affords equivalent safeguard.

16.4.9.3.3 Where the front footrest of folding or telescopic seating is more than 24 in. (610 mm) above the floor, railings or guards not less than 33 in. (825 mm) above such footrests shall be provided.

16.4.9.3.4 The railings required in 16.4.9.3.3 shall be permitted to be not less than 26 in. (660 mm) high where the front row of seats includes backrests.

16.4.9.3.5 Cross aisles located within the seating area shall be provided with rails not less than 26 in. (660 mm) high along the front edge of the cross aisle.

16.4.9.3.6 The railings required in 16.4.9.3.5 shall not be required where the backs of the seats in front of the cross aisle project 24 in. (610 mm) or more above the surface of the cross aisle.

16.4.9.3.7 Vertical openings between guardrails and footboards or seat boards shall be provided with intermediate construction so that a 4 in. (100 mm) diameter sphere cannot pass through the opening.

16.4.9.3.8 An opening between the seat board and footboard located more than 30 in. (760 mm) above grade shall be provided with intermediate construction so that a 4 in. (100 mm) diameter sphere cannot pass through the opening.

16.4.10 Airport Loading Walkways.

16.4.10.1 Airport loading walkways shall conform with NFPA 415, *Standard on Airport Terminal Buildings, Fueling Ramp Drainage, and Loading Walkways*, and the provisions of 16.4.10.2 and 16.4.10.3.

16.4.10.2 Doors in the egress path from the aircraft through the airport loading walkway into the airport terminal building shall meet the following criteria:

(1) They shall swing in the direction of egress from the aircraft.
(2)*They shall not be permitted to have delayed-egress locks.

16.4.10.3 Exit access shall be unimpeded from the airport loading walkway to the nonsecured public areas of the airport terminal building.

16.5 Building Services.

16.5.1 Utilities. Utilities shall comply with the provisions of Chapters 49, 52, and 53.

16.5.2 Heating, Ventilating, and Air-Conditioning Equipment. Heating, ventilating, and air-conditioning equipment shall comply with the provisions of Chapters 50 and 51.

16.5.3 Elevators, Escalators, and Conveyors. Elevators, escalators, and conveyors shall comply with the provisions of Chapter 54.

16.5.4 Rubbish Chutes, Incinerators, and Laundry Chutes. Rubbish chutes, incinerators, and laundry chutes shall comply with the provisions of Section 8.17.

16.6 Reserved.

Chapter 17 Educational Occupancies

17.1 General Requirements.

17.1.1 Application.

17.1.1.1 The requirements of this chapter shall apply to new buildings or portions thereof used as an educational occupancy.

17.1.1.2 Repairs, renovations, modifications, additions, and reconstruction of an educational occupancy, and changes of use, including change of occupancy classification to an educational occupancy, or correction of a damaged or unsafe portion of the building containing the educational occupancy, shall comply with one of the following:

(1) Provisions of this chapter
(2) Provisions of Chapter 15

17.1.1.3 Educational facilities that do not meet the definition of an educational occupancy shall not be required to comply with this chapter but shall comply with the following requirements:

(1) Instructional building—business occupancy *(see Chapter 28)*
(2) Classrooms under 50 persons—business occupancy *(see Chapter 28)*
(3) Classrooms 50 persons and over—assembly occupancy *(see Chapter 16)*
(4) Laboratories, instructional—business occupancy *(see Chapter 28)*
(5) Laboratories, noninstructional—industrial *(see Chapter 29)*

17.1.2 Multiple Occupancies.

17.1.2.1 General. Multiple occupancies shall be in accordance with Section 6.2 and 17.1.2.2. Where there are differences in the specific requirements in this chapter and provisions for mixed occupancies or separated occupancies, as specified in 6.2.3 and 6.2.4, the requirements of this chapter shall apply. *(See 4.3.2.3.)*

17.1.2.2 Assembly and Educational.

17.1.2.2.1 Spaces subject to assembly occupancy shall comply with Chapter 16, including 16.1.2.2, which provides that, where auditorium and gymnasium egress leads through corridors or stairways also serving as egress for other parts of the building, the egress capacity shall be sufficient to allow simultaneous egress from auditorium and classroom sections.

17.1.2.2.2 In the case of an assembly occupancy of a type suitable only for use by the school occupant load (and, therefore, not subject to simultaneous occupancy), the same egress capacity shall be permitted to serve both auditorium and classroom sections.

17.1.2.3 Dormitory and Classrooms. Any building used for both classroom and dormitory purposes shall comply with the applicable provisions of Chapter 24 in addition to complying with this chapter. Where classroom and dormitory sections are not subject to simultaneous occupancy, the same egress capacity shall be permitted to serve both sections.

17.1.3 Classification of Occupancy. Classification of occupancy shall be in accordance with 6.1.3.

17.1.3.1 Educational occupancies shall include all buildings used for educational purposes through the twelfth grade by six or more persons for 4 or more hours per day or more than 12 hours per week.

--`,,```,,,,````-`-`,,`,,`,`,,`---

Copyright National Fire Protection Association
Provided by IHS under license with NFPA
No reproduction or networking permitted without license from IHS
Not for Resale

17.1.3.2 Educational occupancies include part-day preschools, kindergartens, and other schools whose purpose is primarily educational, even though the children are of preschool age.

17.1.3.3 In cases where instruction is incidental to some other occupancy, the section of this *Code* governing such other occupancy shall apply.

17.1.3.4 Other occupancies associated with educational institutions shall be in accordance with the appropriate parts of this *Code*.

17.1.4 Classification of Hazard of Contents.

17.1.4.1 Hazard of contents shall be classified in accordance with 6.3.2.

17.1.4.2 Buildings or areas in which high hazard contents are stored, used, or handled shall comply with Chapter 34.

17.1.5 Minimum Construction Requirements.

17.1.5.1 Construction shall be in accordance with all of the following, except as modified by 17.1.5.2 and 17.1.5.3:

(1) Chapter 7, Construction Types and Height and Area Requirements
(2) Chapter 8, Fire-Resistive Materials and Construction
(3) Chapter 13, Encroachments into the Public Right-of-Way
(4) Chapter 14, Safeguards During Construction
(5) Chapter 31, Occupancies in Special Structures
(6) Chapter 35, Structural Design
(7) Chapter 36, Soils, Foundations, and Retaining Walls
(8) Chapter 37, Exterior Wall Construction
(9) Chapter 38, Roof Assemblies and Roof Structures
(10) Chapter 39, Flood-Resistant Design and Construction
(11) Chapter 40, Quality Assurance During Construction

17.1.5.2* Educational occupancies shall not be located more than one level below the level of exit discharge.

17.1.5.3 In buildings of Type V(000) construction, educational occupancies shall not be located below the level of exit discharge.

17.1.6 Occupant Load.

17.1.6.1 The occupant load, in number of persons for whom means of egress and other provisions are required, shall be determined on the basis of the occupant load factors of Table 11.3.1.2 that are characteristic of the use of the space, or shall be determined as the maximum probable population of the space under consideration, whichever is greater.

17.1.6.2 The occupant load of an educational occupancy, or a portion thereof, shall be permitted to be modified from that specified in 17.1.6.1 if the necessary aisles and exits are provided. An approved aisle or seating diagram shall be required by the authority having jurisdiction to substantiate such a modification.

17.1.7 Accessibility. Accessibility shall be in accordance with Chapter 12.

17.2 Means of Egress Requirements.

17.2.1 General.

17.2.1.1 Means of egress shall be in accordance with Chapter 11 and Section 17.2.

17.2.1.2 Rooms normally occupied by preschool, kindergarten, or first-grade students shall be located on a level of exit discharge. Rooms normally occupied by second-grade students shall not be located more than one story above a level of exit discharge.

17.2.1.3 Rooms or areas located on floor levels other than as specified in 17.2.1.2 shall be permitted to be used where provided with independent means of egress dedicated for use by the preschool, kindergarten, first-grade, or second-grade students.

17.2.2 Means of Egress Components.

17.2.2.1 General. Components of means of egress shall be limited to the types described in 17.2.2.2 through 17.2.2.10.

17.2.2.2 Doors.

17.2.2.2.1 Doors complying with 11.2.1 shall be permitted.

17.2.2.2.2 Any door in a required means of egress from an area having an occupant load of 100 or more persons shall be permitted to be provided with a latch or lock only if such latch or lock is panic hardware or fire exit hardware complying with 11.2.1.7.

17.2.2.2.3 Special locking arrangements complying with 11.2.1.6 shall be permitted.

17.2.2.2.4 Any exit door that is designed to normally be kept closed shall conform with 11.2.1.8.

17.2.2.2.5 Only one locking or latching device shall be permitted on a door or on one leaf of a pair of doors.

17.2.2.3 Stairs. Stairs complying with 11.2.2 shall be permitted.

17.2.2.4 Smokeproof Enclosures. Smokeproof enclosures complying with 11.2.3 shall be permitted.

17.2.2.5 Horizontal Exits. Horizontal exits complying with 11.2.4 shall be permitted.

17.2.2.6 Ramps. Ramps complying with 11.2.5 shall be permitted.

17.2.2.7 Exit Passageways. Exit passageways complying with 11.2.6 shall be permitted.

17.2.2.8 Fire Escape Ladders. Fire escape ladders complying with 11.2.9 shall be permitted.

17.2.2.9 Alternating Tread Devices. Alternating tread devices complying with 11.2.11 shall be permitted.

17.2.2.10 Areas of Refuge. Areas of refuge complying with 11.2.12 shall be permitted.

17.2.3 Capacity of Means of Egress.

17.2.3.1 General. Capacity of means of egress shall be in accordance with Section 11.3.

17.2.3.2 Minimum Corridor Width.

17.2.3.2.1 Exit access corridors shall be not less than 6 ft (1830 mm) clear width.

17.2.3.2.2 Drinking fountains or other equipment, fixed or movable, shall not be placed so as to obstruct the required minimum 6 ft (1830 mm) corridor width.

17.2.4 Number of Exits. Not less than two separate exits shall meet the following criteria:

(1) They shall be provided on every story.
(2) They shall be accessible from every part of every story and mezzanine.

Copyright National Fire Protection Association
Provided by IHS under license with NFPA
No reproduction or networking permitted without license from IHS
Not for Resale

17.2.5 Arrangement of Means of Egress.

17.2.5.1 General. Means of egress shall be arranged in accordance with Section 11.5.

17.2.5.2 Dead-End Corridors. No dead-end corridor shall exceed 20 ft (6100 mm), other than in buildings protected throughout by an approved, electrically supervised automatic sprinkler system in accordance with Section 55.3, in which case dead-end corridors shall not exceed 50 ft (15 m).

17.2.5.3 Common Path of Travel. No common path of travel shall exceed 75 ft (23 m), other than for the first 100 ft (30 m) in a building protected throughout by an approved, electrically supervised automatic sprinkler system in accordance with Section 55.3.

17.2.5.4 Exit Access.

17.2.5.4.1 Every room or space larger than 1000 ft^2 (93 m^2), or with an occupant load of more than 50, shall comply with the following:

(1) The room or space shall have a minimum of 2 exit access doors.
(2) The doors required by 17.2.5.4.1(1) shall provide access to separate exits.
(3) The doors required by 17.2.5.4.1(1) shall be permitted to open onto a common corridor, provided that such corridor leads to separate exits located in opposite directions.

17.2.5.4.2 Every room that is normally subject to student occupancy shall have an exit access door leading directly to an exit access corridor or exit, unless otherwise permitted by the following:

(1) The requirement of 17.2.4.2 shall not apply where an exit door opens directly to the outside or to an exterior corridor or balcony. *(See 17.2.5.7.)*
(2) One room shall be permitted to intervene between a normally occupied student room and an exit access corridor, provided that all of the following criteria are met:
   (a) The travel from a room served by an intervening room to the corridor door or exit shall not exceed 75 ft (23 m).
   (b) Clothing, personal effects, or other materials deemed hazardous by the authority having jurisdiction shall be stored in metal lockers, provided that they do not obstruct the exit access, or the intervening room shall be sprinklered in accordance with Section 55.3.
   (c) One of the following means of protection shall be provided:
      i. The intervening room shall have approved fire detection that activates the building alarm.
      ii. The building shall be protected by an approved, electrically supervised automatic sprinkler system in accordance with Section 55.3.

17.2.5.5 Corridor Doors. Doors that swing into an exit access corridor shall be arranged to prevent interference with corridor travel. *(See also 11.2.1.4.3.)*

17.2.5.6 Aisles. Aisles shall be not less than 30 in. (760 mm) wide. The space between parallel rows of seats shall not be subject to the minimum aisle width, provided that the number of seats that intervene between any seat and an aisle does not exceed six.

17.2.5.7* Exterior Corridors or Balconies. Exterior exit access shall comply with 11.5.3.

17.2.6 Travel Distance to Exits.

17.2.6.1 Travel distance to an exit shall not exceed 150 ft (45 m) from any point in a building. *(See also Section 11.6.)*

17.2.6.2 Travel distance shall not exceed 200 ft (61 m) in educational occupancies protected throughout by an approved, electrically supervised automatic sprinkler system installed in accordance with Section 55.3.

17.2.7 Discharge from Exits. Discharge from exits shall be arranged in accordance with Section 11.7.

17.2.8 Illumination of Means of Egress. Means of egress shall be illuminated in accordance with Section 11.8.

17.2.9 Emergency Lighting. Emergency lighting shall be provided in accordance with Section 11.9.

17.2.10 Marking of Means of Egress. Means of egress shall have signs in accordance with Section 11.10.

17.2.11 Special Means of Egress Features.

17.2.11.1* Windows for Rescue.

17.2.11.1.1 Every room or space greater than 250 ft^2 (23.2 m^2) used for classroom or other educational purposes, or normally subject to student occupancy, shall have at least one outside window for emergency rescue that complies with the following:

(1) The window shall be openable from the inside without the use of tools and shall provide a clear opening with the following dimensions:
   (a) Width not less than 20 in. (510 mm)
   (b) Height of 24 in. (610 mm)
   (c) Area of 5.7 ft^2 (0.5 m^2)
(2) The bottom of the opening shall be not more than 44 in. (1120 mm) above the floor, and any latching device shall be capable of being operated from not more than 54 in. (1370 mm) above the finished floor.
(3) The clear opening shall allow a rectangular solid, with a width and height that provides not less than the required area of 5.7 ft^2 (0.53 m^2), and a depth of not less than 20 in. (510 mm), to pass fully through the opening.
(4) The window shall be accessible by the fire department and shall open into an area having access to a public way.

17.2.11.1.2 The requirements of 17.2.11.1.1 shall not apply to the following locations:

(1) Buildings protected throughout by an approved, electrically supervised automatic sprinkler system installed in accordance with Section 55.3
(2) Where the room or space has a door leading directly to the outside of the building
(3) Rooms located higher than three stories above grade

17.2.11.2 Lockups. Lockups in educational occupancies shall comply with the requirements of 21.4.5.

17.3 Protection.

17.3.1 Protection of Vertical Openings. Any vertical opening, other than unprotected vertical openings in accordance with 8.12.4.2, shall be enclosed or protected in accordance with Section 8.12. Where the provisions of 8.12.2 are used, the requirements of 17.3.5.4 shall be met.

17.3.2 Hazardous Area Protection.

17.3.2.1 General. Rooms or spaces for the storage, processing, or use of materials specified in the following list shall be protected in accordance with the following:

Copyright National Fire Protection Association
Provided by IHS under license with NFPA
No reproduction or networking permitted without license from IHS
Not for Resale

(1) Separation from the remainder of the building by fire barriers having a fire resistance rating of not less than 1 hour or protection of such rooms by automatic extinguishing systems as specified in Section 8.15 in the following areas:
   (a) Boiler and furnace rooms, other than those enclosing only air-handling equipment
   (b) Rooms or spaces used for the storage of combustible supplies in quantities deemed hazardous by the authority having jurisdiction
   (c) Rooms or spaces used for the storage of hazardous materials or flammable or combustible liquids in quantities deemed hazardous by recognized standards
   (d) Janitor closets, other than those protected by automatic sprinklers, which are permitted to have doors with ventilating louvers
(2) Separation from the remainder of the building by fire barriers having a fire resistance rating of not less than 1 hour and protection of such rooms by automatic extinguishing systems as specified in Section 8.15 in the following areas:
   (a) Laundries
   (b) Maintenance shops, including woodworking and painting areas
   (c) Rooms or spaces used for processing or use of combustible supplies deemed hazardous by the authority having jurisdiction
   (d) Rooms or spaces used for processing or use of hazardous materials or flammable or combustible liquids in quantities deemed hazardous by recognized standards
(3) Where automatic extinguishing is used to meet the requirements of 17.3.2.1(1) or (2), protection permitted in accordance with 55.3.1.2

17.3.2.2 Cooking Facilities.

17.3.2.2.1 Cooking facilities shall be protected in accordance with Section 55.10.

17.3.2.2.2 Openings shall not be required to be protected between food preparation areas and dining areas.

17.3.2.3 Laboratories. Laboratories that use chemicals shall comply with NFPA 45, *Standard on Fire Protection for Laboratories Using Chemicals*.

17.3.2.4 Stages. Stages shall be protected in accordance with 16.4.5.

17.3.3 Interior Finish.

17.3.3.1 General. Interior finish shall be in accordance with Chapter 10.

17.3.3.2* Interior Wall and Ceiling Finish. Interior wall and ceiling finish materials in accordance with Chapter 10 shall be permitted as follows:

(1) Exits—Class A
(2) Other than exits—Class A or Class B
(3) Low-height partitions not exceeding 60 in. (1525 mm) used in locations other than exits—Class A, Class B, or Class C

17.3.3.3 Interior Floor Finish. Interior floor finish in exit enclosures and in exit access corridors, and in spaces not separated from them by walls complying with 17.3.6, shall be not less than Class II in accordance with 10.6.4. In all other spaces, interior floor finish shall comply with 10.6.1 and 10.6.2.

17.3.4 Detection, Alarm, and Communications Systems.

17.3.4.1 General.

17.3.4.1.1 Educational occupancies shall be provided with a fire alarm system in accordance with Section 55.2, unless otherwise provided in 17.3.4.1.2.

17.3.4.1.2 The requirement of 17.3.4.1.1 shall not apply to a building with an area of not more than 1000 ft^2 (93 m^2) that contains a single classroom and is located not closer than 50 ft (15 m) from another building.

17.3.4.2 Initiation.

17.3.4.2.1 General. Initiation of the required fire alarm system shall be by manual means in accordance with Section 55.2.2.

17.3.4.2.2 Initiation by Automatic Sprinkler System. In buildings provided with automatic sprinkler protection, the operation of the sprinkler system shall automatically initiate the fire alarm system in addition to the initiation means required in 17.3.4.2.1.

17.3.4.2.3 Alternative Protection System. Manual fire alarm boxes shall be permitted to be eliminated in accordance with 17.3.4.2.3.1 or 17.3.4.2.3.2.

17.3.4.2.3.1* Manual fire alarm boxes shall be permitted to be eliminated where all of the following conditions apply:

(1) Interior corridors are protected by smoke detectors using an alarm verification system as described in *NFPA 72, National Fire Alarm Code*.
(2) Areas such as auditoriums, cafeterias, and gymnasiums are protected by heat-detection devices or other approved detection devices.
(3) Shops and laboratories involving dusts or vapors are protected by heat-detection devices or other approved detection devices.
(4) Provision is made at a central point to manually activate the evacuation signal, or to evacuate only affected areas.

17.3.4.2.3.2* Manual fire alarm boxes shall be permitted to be eliminated where all of the following conditions apply:

(1) The building is protected throughout by an approved, electrically supervised automatic sprinkler system in accordance with Section 55.3.
(2) Provision is made at a central point to manually activate the evacuation signal, or to evacuate only affected areas.

17.3.4.3 Notification.

17.3.4.3.1 Occupant Notification.

17.3.4.3.1.1* Occupant notification shall be accomplished automatically in accordance with 55.2.3. Positive alarm sequence shall be permitted in accordance with 55.2.3.4.

17.3.4.3.1.2 Where installed and operated in accordance with *NFPA 72*, the fire alarm system shall be permitted to be used for other emergency signaling or for class changes.

17.3.4.3.1.3 In order to prevent students from being returned to a building that is burning, the recall signal shall be separate and distinct from, and incapable of being mistaken for, any other signals. Such signal shall be permitted to be a distinctively colored flag or banner. If the recall signal is

--`,,```,,,,````-`-`,,`,,`,`,,`---

Copyright National Fire Protection Association
Provided by IHS under license with NFPA
No reproduction or networking permitted without license from IHS
Not for Resale

electrical, the push buttons or other controls shall be kept under lock, the key for which shall be in the possession of the principal or some other designated person to prevent a recall at a time when there is an actual fire. Regardless of the method of recall, the controls for the signal shall be kept under a lock.

17.3.4.3.2 Emergency Forces Notification. Fire department notification shall be accomplished in accordance with 55.2.4.

17.3.5 Extinguishment Requirements.

17.3.5.1 Educational occupancy buildings exceeding 20,000 ft^2 (1860 m^2) shall be protected throughout by an approved, electrically supervised automatic sprinkler system in accordance with Section 55.3.

17.3.5.2 Educational occupancy buildings four or more stories in height shall be protected throughout by an approved, electrically supervised automatic sprinkler system in accordance with Section 55.3.

17.3.5.3 Every portion of an educational occupancy building below the level of exit discharge shall be protected throughout by an approved, electrically supervised automatic sprinkler system in accordance with Section 55.3.

17.3.5.4 Educational occupancy buildings with unprotected openings in accordance with 8.12.2 shall be protected throughout by an approved, electrically supervised automatic sprinkler system in accordance with Section 55.3.

17.3.5.5 Where another provision of this chapter requires an automatic sprinkler system to be electrically supervised, the sprinkler system shall be electrically supervised in accordance with 55.3.2.

17.3.5.6 Standpipes shall be in accordance with 17.3.5.6.1 and 17.3.5.6.2.

17.3.5.6.1 Class I standpipe systems shall be provided in buildings four or more stories in height, or having four or more basement levels, as specified in 55.4.1.

17.3.5.6.2 Class I standpipe systems shall be provided in buildings not protected throughout by an approved, electrically supervised automatic sprinkler system in accordance with Section 55.3 where an occupiable area is more than 150 ft (45 m) from the closest point of fire department entry into the building.

17.3.5.7 Portable fire extinguishers in accordance with the provisions of Section 55.6 shall be installed.

17.3.6 Corridors. Corridors shall be separated from other parts of the story by walls having a 1-hour fire resistance rating in accordance with Section 8.4, unless otherwise permitted by the following:

(1) Corridor protection shall not be required where all spaces normally subject to student occupancy have not less than one door opening directly to the outside or to an exterior exit access corridor or balcony. *(See 17.2.5.7.)*
(2) In buildings protected throughout by an approved, electrically supervised automatic sprinkler system installed in accordance with Section 55.3, corridor walls shall not be required to be rated, provided that such walls form smoke partitions in accordance with Section 8.10.
(3) Where the corridor ceiling is an assembly having a 1-hour fire resistance rating where tested as a wall, the corridor walls shall be permitted to terminate at the corridor ceiling.
(4) Lavatories shall not be required to be separated from corridors, provided that they are separated from all other spaces by walls having not less than a 1-hour fire resistance rating in accordance with Section 8.4.
(5) Lavatories shall not be required to be separated from corridors, provided that the building is protected throughout by an approved, electrically supervised automatic sprinkler system in accordance with Section 55.3.

17.3.7 Subdivision of Building Spaces.

17.3.7.1 Educational occupancies shall be subdivided into compartments by smoke barriers having a 1-hour fire resistance rating and complying with Sections 8.4 and 8.11 where either of the following conditions exists:

(1) The maximum area of a compartment, including the aggregate area of all floors having a common atmosphere, exceeds 30,000 ft^2 (2800 m^2).
(2) The length or width of the building exceeds 300 ft (91 m).

17.3.7.1.1 The requirement of 17.3.7.1 shall not apply where all spaces normally subject to student occupancy have not less than one door opening directly to the outside or to an exterior or exit access balcony or corridor in accordance with 11.5.3.

17.3.7.1.2 The requirement of 17.3.7.1 shall not apply to buildings protected throughout by an approved, electrically supervised automatic sprinkler system in accordance with Section 55.3.

17.3.7.2 The area of a smoke compartment shall not exceed 30,000 ft^2 (2800 m^2), with no dimension exceeding 300 ft (91 m).

17.4 Special Provisions.

17.4.1 Limited Access or Underground Structures. Limited access or underground structures shall comply with Chapter 31.

17.4.2 High-Rise Buildings. High-rise buildings shall comply with Chapter 33.

17.4.3 Flexible Plan and Open Plan Buildings.

17.4.3.1 Flexible plan and open plan buildings shall comply with the requirements of this chapter, as modified by 17.4.3.2 through 17.4.3.4.

17.4.3.2 Each room occupied by more than 300 persons shall have 2 or more means of egress entering into separate atmospheres. Where 3 or more means of egress are required, not more than 2 such means of egress shall enter into the same common atmosphere.

17.4.3.3 Flexible plan buildings shall be permitted to have walls and partitions rearranged periodically only if revised plans or diagrams have been approved by the authority having jurisdiction.

17.4.3.4 Flexible plan buildings shall be evaluated while all folding walls are extended and in use, as well as when they are in the retracted position.

17.5 Building Services.

17.5.1 Utilities. Utilities shall comply with the provisions of Chapters 49, 52, and 53.

Copyright National Fire Protection Association
Provided by IHS under license with NFPA
No reproduction or networking permitted without license from IHS
Not for Resale

17.5.2 Heating, Ventilating, and Air-Conditioning Equipment.

17.5.2.1 Heating, ventilating, and air-conditioning equipment shall comply with the provisions of Chapters 50 and 51.

17.5.2.2 Unvented fuel-fired heating equipment shall be prohibited.

17.5.2.3 The requirement of 17.5.2.2 shall not apply to gas space heaters installed in compliance with NFPA 54/ANSI Z223.1, *National Fuel Gas Code*.

17.5.3 Elevators, Escalators, and Conveyors. Elevators, escalators, and conveyors shall comply with the provisions of Chapter 54.

17.5.4 Rubbish Chutes, Incinerators, and Laundry Chutes. Rubbish chutes, incinerators, and laundry chutes shall comply with the provisions of Section 8.17.

17.5.5 Furnishings and Decorations.

17.5.5.1 Draperies, curtains, and other similar furnishings and decorations in educational occupancies shall be in accordance with the provisions of Section 10.3 of NFPA *101, Life Safety Code*.

17.5.5.2 Clothing and personal effects shall not be stored in corridors, unless one of the following criteria is met:

(1) The corridors are protected by an automatic sprinkler system in accordance with Section 55.3.
(2) The corridor areas are protected by a smoke detection system in accordance with Section 55.2.
(3) Such clothing and personal effects are stored in metal lockers, provided that the required egress width is maintained.

17.6 Reserved.

Chapter 18 Day-Care Occupancies

18.1 General Requirements.

18.1.1 Application.

18.1.1.1 The requirements of this chapter shall apply to new buildings or portions thereof used as a day-care occupancy.

18.1.1.2 Repairs, renovations, modifications, additions, and reconstruction of a day-care occupancy, and changes of use, including change of occupancy classification to a day-care occupancy, or correction of a damaged or unsafe portion of the building containing the day-care occupancy, shall comply with one of the following:

(1) Provisions of this chapter
(2) Provisions of Chapter 15

18.1.1.3 Sections 18.1 through 18.5 shall apply to life safety requirements for day-care occupancies in which more than 12 clients receive care, maintenance, and supervision by other than their relative(s) or legal guardian(s) for less than 24 hours per day.

18.1.1.4 Section 18.1, other than 18.1.5, and Section 18.6 shall apply to life safety requirements for day-care homes.

18.1.1.5 Where a facility houses more than one age group of self-preservation capability, the strictest requirements applicable to any group present shall apply throughout the day-care occupancy or building, as applicable, unless the area housing that group is maintained as a separate fire area.

18.1.1.6 Places of religious worship shall not be required to meet the provisions of this chapter when providing day care while services are being held in the building.

18.1.2 Multiple Occupancies.

18.1.2.1 General. Multiple occupancies shall be in accordance with Section 6.2 and 18.1.2. Where there are differences in the specific requirements in this chapter and provisions for mixed occupancies or separated occupancies, as specified in 6.2.3 and 6.2.4, the requirements of this chapter shall apply. *(See 4.3.2.3.)*

18.1.2.2 Day-Care Occupancies in Apartment Buildings. If the two required exit accesses from a day-care occupancy enter the same corridor as an apartment occupancy, the exit accesses shall be separated in the corridor by a smoke barrier having not less than a 1-hour fire resistance rating and constructed in accordance with Section 8.11. The smoke barrier shall be located so that it has an exit on each side.

18.1.3 Classification of Occupancy. Classification of occupancy shall be in accordance with 6.1.4.

18.1.3.1 Occupancies that include part-day preschools, kindergartens, and other schools whose purpose is primarily educational, even though the children are of preschool age, shall comply with the provisions of Chapter 17.

18.1.3.2 Adult day care shall include any building, or portion thereof, used for less than 24 hours per day to house more than three adults requiring care, maintenance, and supervision by other than their relative(s). Clients shall be ambulatory or semiambulatory and shall not be bedridden. They shall not exhibit behavior that is harmful to themselves or others.

18.1.4 Classification of Hazard of Contents.

18.1.4.1 Hazard of contents shall be classified in accordance with 6.3.2.

18.1.4.2 Buildings or areas in which high hazard contents are stored, used, or handled shall comply with Chapter 34.

18.1.5 Minimum Construction Requirements.

18.1.5.1 Construction shall be in accordance with all of the following, except as modified by 18.1.5.2 through 18.1.5.4:

(1) Chapter 7, Construction Types and Height and Area Requirements
(2) Chapter 8, Fire-Resistive Materials and Construction
(3) Chapter 13, Encroachments into the Public Right-of-Way
(4) Chapter 14, Safeguards During Construction
(5) Chapter 31, Occupancies in Special Structures
(6) Chapter 35, Structural Design
(7) Chapter 36, Soils, Foundations, and Retaining Walls
(8) Chapter 37, Exterior Wall Construction
(9) Chapter 38, Roof Assemblies and Roof Structures
(10) Chapter 39, Flood-Resistant Design and Construction
(11) Chapter 40, Quality Assurance During Construction

18.1.5.2 Day-care occupancies shall not be located more than one level below the level of exit discharge.

18.1.5.3 Buildings in which day-care occupancies are located one level below the level of exit discharge shall be protected throughout by an approved, electrically supervised automatic sprinkler system in accordance with Section 55.3.

Copyright National Fire Protection Association
Provided by IHS under license with NFPA
No reproduction or networking permitted without license from IHS
Not for Resale

18.1.5.4 In buildings of Type V(000) construction, day-care occupancies shall not be located below the level of exit discharge.

18.1.6 Occupant Load.

18.1.6.1 The occupant load, in number of persons for whom means of egress and other provisions are required, shall be determined on the basis of the occupant load factors of Table 11.3.1.2 that are characteristic of the use of the space, or shall be determined as the maximum probable population of the space under consideration, whichever is greater.

18.1.6.2 The occupant load of a day-care occupancy, or a portion thereof, shall be permitted to be modified from that specified in 18.1.6.1 if the necessary aisles and exits are provided. An approved aisle, seating, and exiting diagram shall be required by the authority having jurisdiction to substantiate such a modification.

18.1.7 Accessibility. Accessibility shall be in accordance with Chapter 12.

18.2 Means of Egress Requirements.

18.2.1 General. Means of egress shall be in accordance with Chapter 11 and Section 18.2.

18.2.2 Means of Egress Components.

18.2.2.1 General. Components of means of egress shall be limited to the types described in 18.2.2.2 through 18.2.2.10.

18.2.2.2 Doors.

18.2.2.2.1 General. Doors complying with 11.2.1 shall be permitted.

18.2.2.2.2 Panic Hardware or Fire Exit Hardware. Any door in a required means of egress from an area having an occupant load of 100 or more persons shall be permitted to be provided with a latch or lock only if such latch or lock is panic hardware or fire exit hardware complying with 11.2.1.7.

18.2.2.2.3 Door Closure. Any exit door designed to normally be kept closed shall comply with 11.2.1.8.

18.2.2.2.4 Locks and Latches. Only one locking or latching device shall be permitted on a door or on one leaf of a pair of doors.

18.2.2.2.5 Special Locking Arrangements. Special locking arrangements complying with 11.2.1.6 shall be permitted.

18.2.2.2.6* Closet Doors. Every closet door latch shall be such that clients can open the door from inside the closet.

18.2.2.2.7 Bathroom Doors. Every bathroom door lock shall be designed to allow opening of the locked door from the outside in an emergency. The opening device shall be readily accessible to the staff.

18.2.2.3 Stairs. Stairs complying with 11.2.2 shall be permitted.

18.2.2.4 Smokeproof Enclosures. Smokeproof enclosures complying with 11.2.3 shall be permitted.

18.2.2.5 Horizontal Exits. Horizontal exits complying with 11.2.4 shall be permitted.

18.2.2.6 Ramps. Ramps complying with 11.2.5 shall be permitted.

18.2.2.7 Exit Passageways. Exit passageways complying with 11.2.6 shall be permitted.

18.2.2.8 Fire Escape Ladders. Fire escape ladders complying with 11.2.9 shall be permitted.

18.2.2.9 Alternating Tread Devices. Alternating tread devices complying with 11.2.11 shall be permitted.

18.2.2.10 Areas of Refuge. Areas of refuge complying with 11.2.12 shall be permitted.

18.2.3 Capacity of Means of Egress. Capacity of means of egress shall be in accordance with Section 11.3.

18.2.4 Number of Exits. Not less than two separate exits shall meet the following criteria:

(1) They shall be provided on every story.
(2) They shall be accessible from every part of every story and mezzanine.

18.2.5 Arrangement of Means of Egress.

18.2.5.1 Means of egress shall be arranged in accordance with Section 11.5.

18.2.5.2 No dead-end corridor shall exceed 20 ft (6100 mm), other than in buildings protected throughout by an approved, electrically supervised automatic sprinkler system in accordance with Section 55.3, in which case dead-end corridors shall not exceed 50 ft (15 m).

18.2.5.3 No common path of travel shall exceed 75 ft (23 m), other than for the first 100 ft (30 m) in a building protected throughout by an approved, electrically supervised automatic sprinkler system in accordance with Section 55.3.

18.2.6 Travel Distance to Exits.

18.2.6.1 General. Travel distance shall be measured in accordance with Section 11.6.

18.2.6.2 Travel Distance. Requirements for travel distance shall be as follows:

(1) The travel distance between any room door intended as an exit access and an exit shall not exceed 100 ft (30 m).
(2) The travel distance between any point in a room and an exit shall not exceed 150 ft (45 m).
(3) The travel distance between any point in a sleeping room and an exit access door in that room shall not exceed 50 ft (15 m).
(4) The travel distance specified in 18.2.6.2(1) and (2) shall be permitted to be increased by 50 ft (15 m) in buildings protected throughout by an approved, electrically supervised automatic sprinkler system installed in accordance with Section 55.3.

18.2.7 Discharge from Exits. Discharge from exits shall be arranged in accordance with Section 11.7.

18.2.8 Illumination of Means of Egress. Means of egress shall be illuminated in accordance with Section 11.8.

18.2.9 Emergency Lighting. Emergency lighting shall be provided in accordance with Section 11.9 in the following areas:

(1) Interior stairs and corridors
(2) Assembly use spaces
(3) Flexible and open plan buildings
(4) Interior or windowless portions of buildings
(5) Shops and laboratories

Copyright National Fire Protection Association
Provided by IHS under license with NFPA
No reproduction or networking permitted without license from IHS
Not for Resale

18.2.10 Marking of Means of Egress. Means of egress shall have signs in accordance with Section 11.10.

18.2.11 Special Means of Egress Features.

18.2.11.1 Windows for Rescue.

18.2.11.1.1 Every room or space normally subject to client occupancy, other than bathrooms, shall have not less than one outside window for emergency rescue that complies with the following:

(1) The window shall be openable from the inside without the use of tools and shall provide a clear opening with the following dimensions:
   (a) Width not less than 20 in. (510 mm)
   (b) Height not less than 24 in. (610 mm)
   (c) Area of 5.7 ft^2(0.5 m^2)
(2) The bottom of the opening shall be not more than 44 in. (1120 mm) above the floor.
(3) The clear opening shall allow a rectangular solid, with a width and height that provides not less than the required area of 5.7 ft^2 (0.5 m^2), and a depth of not less than 20 in. (510 mm), to pass fully through the opening.

18.2.11.1.2 The requirements of 18.2.11.1.1 shall not apply to the following locations:

(1) Buildings protected throughout by an approved, electrically supervised automatic sprinkler system installed in accordance with Section 55.3
(2) Where the room or space has a door leading directly to the outside of the building

18.2.11.2 Lockups. Lockups in day-care occupancies shall comply with the requirements of 21.4.5.

18.3 Protection.

18.3.1 Protection of Vertical Openings. Any vertical opening, other than unprotected vertical openings in accordance with 8.12.4.2, shall be enclosed or protected in accordance with Section 8.12.

18.3.2 Hazardous Area Protection.

18.3.2.1 General. Rooms or spaces for the storage, processing, or use of materials specified in the following list shall be protected in accordance with the following:

(1) Separation from the remainder of the building by fire barriers having a fire resistance rating of not less than 1 hour or protection of such rooms by automatic extinguishing systems as specified in Section 8.15 in the following areas:
   (a) Boiler and furnace rooms, other than those enclosing only air-handling equipment
   (b) Rooms or spaces used for the storage of combustible supplies in quantities deemed hazardous by the authority having jurisdiction
   (c) Rooms or spaces used for the storage of hazardous materials or flammable or combustible liquids in quantities deemed hazardous by recognized standards
   (d) Janitor closets, other than those protected by automatic sprinklers, which are permitted to have doors with ventilating louvers
(2) Separation from the remainder of the building by fire barriers having a fire resistance rating of not less than 1 hour and protection of such rooms by automatic extinguishing systems as specified in Section 8.15 in the following areas:
   (a)*Laundries
   (b) Maintenance shops, including woodworking and painting areas
   (c) Rooms or spaces used for processing or use of combustible supplies deemed hazardous by the authority having jurisdiction
   (d) Rooms or spaces used for processing or use of hazardous materials or flammable or combustible liquids in quantities deemed hazardous by recognized standards
(3) Where automatic extinguishing is used to meet the requirements of 18.3.2.1(1) or (2), protection permitted in accordance with 55.3.1.2

18.3.2.2 Cooking Facilities.

18.3.2.2.1 Cooking facilities shall be protected in accordance with Section 55.10.

18.3.2.2.2 Openings shall not be required to be protected between food preparation areas and dining areas.

18.3.2.2.3 Where domestic cooking equipment is used for food warming or limited cooking, the protection or segregation of food preparation facilities shall not be required if approved by the authority having jurisdiction.

18.3.3 Interior Finish.

18.3.3.1 General. Interior finish shall be in accordance with Chapter 10.

18.3.3.2 Interior Wall and Ceiling Finish. Interior wall and ceiling finish materials in accordance with Chapter 10 shall be permitted as follows:

(1) Stairways, corridors, and lobbies — Class A
(2) All other occupied areas — Class A or Class B

18.3.3.3 Interior Floor Finish. Interior floor finish in exit enclosures and in exit access corridors, and in spaces not separated from them by walls complying with 18.3.6, shall be not less than Class II in accordance with 10.6.4. In all other spaces, interior floor finish shall comply with 10.6.1 and 10.6.2.

18.3.4 Detection, Alarm, and Communications Systems.

18.3.4.1 General.

18.3.4.1.1 Day-care occupancies shall be provided with a fire alarm system in accordance with Section 55.2.

18.3.4.1.2 The requirement of 18.3.4.1.1 shall not apply to day-care occupancies housed in one room.

18.3.4.2 Initiation. Initiation of the required fire alarm system shall be by manual means and by operation of any required smoke detectors and required sprinkler systems in accordance with 55.2.2.

18.3.4.3 Occupant Notification.

18.3.4.3.1 Occupant notification shall be in accordance with 55.2.3.

18.3.4.3.2 Positive alarm sequence shall be permitted in accordance with 55.2.3.4.

18.3.4.4 Emergency Forces Notification. Fire department notification shall be accomplished in accordance with 55.2.4.

Copyright National Fire Protection Association
Provided by IHS under license with NFPA
No reproduction or networking permitted without license from IHS
Not for Resale

18.3.4.5 Detection.

18.3.4.5.1 A smoke detection system shall be installed in accordance with Section 55.2, with placement of detectors in each story in front of doors to the stairways and in the corridors of all floors occupied by the day-care occupancy. Detectors also shall be installed in lounges, recreation areas, and sleeping rooms in the day-care occupancy.

18.3.4.5.2 The requirement of 18.3.4.5.1 shall not apply to day-care occupancies housed in one room.

18.3.5 Extinguishment Requirements.

18.3.5.1 Day-care occupancy buildings with a fire compartment exceeding 20,000 ft^2 (1860 m^2) shall be protected throughout by an approved, electrically supervised automatic sprinkler system in accordance with Section 55.3.

18.3.5.2 Fire compartments provided to subdivide the building so as to be exempt from the sprinkler requirement of 18.3.5.1 shall be separated from the rest of the building by fire barrier walls or horizontal assemblies, or both, having a fire resistance rating of not less than 2 hours and shall comply with Chapter 8.

18.3.5.3 Buildings with day-care occupancies located two or more stories above the level of exit discharge shall be protected throughout by an approved, electrically supervised automatic sprinkler system in accordance with Section 55.3.

18.3.5.4 Day-care occupancy buildings with clients under 24 months old or clients incapable of self-preservation shall be protected throughout by an approved, electrically supervised automatic sprinkler system in accordance with Section 55.3.

18.3.5.5 Where another provision of this chapter requires an automatic sprinkler system to be electrically supervised, the sprinkler system shall be electrically supervised in accordance with 55.3.2.

18.3.5.6 Standpipes shall be in accordance with 18.3.5.6.1 and 18.3.5.6.2.

18.3.5.6.1 Class I standpipe systems shall be provided in buildings four or more stories in height, or having four or more basement levels, as specified in 55.4.1.

18.3.5.6.2 Class I standpipe systems shall be provided in buildings not protected throughout by an approved, electrically supervised automatic sprinkler system in accordance with Section 55.3 where an occupiable area is more than 150 ft (45 m) from the closest point of fire department entry into the building.

18.3.5.7 Portable fire extinguishers in accordance with the provisions of Section 55.6 shall be installed.

18.3.6 Corridors. Every interior corridor shall be constructed of walls having not less than a 1-hour fire resistance rating in accordance with Section 8.4, unless otherwise permitted by the following:

(1) Corridor protection shall not be required where all spaces normally subject to client occupancy have not less than one door opening directly to the outside or to an exterior exit access balcony or corridor in accordance with 11.5.3.
(2) In buildings protected throughout by an approved, electrically supervised automatic sprinkler system installed in accordance with Section 55.3, corridor walls shall not be required to be rated, provided that such walls form smoke partitions in accordance with Section 8.10.
(3) Where the corridor ceiling is an assembly having a 1-hour fire resistance rating where tested as a wall, the corridor walls shall be permitted to terminate at the corridor ceiling.
(4) Lavatories shall not be required to be separated from corridors, provided that they are separated from all other spaces by walls having not less than a 1-hour fire resistance rating in accordance with Section 8.4.
(5) Lavatories shall not be required to be separated from corridors, provided that the building is protected throughout by an approved, electrically supervised automatic sprinkler system in accordance with Section 55.3.

18.3.7 Subdivision of Building Spaces. Where day-care occupancies, other than day-care homes, with clients who are 24 months old or less or who are incapable of self-preservation, are located one or more stories above the level of exit discharge, or where day-care occupancies are located two or more stories above the level of exit discharge, smoke barriers shall be provided to divide such stories into a minimum of two smoke compartments. The smoke barriers shall be constructed in accordance with Section 8.11 but shall not be required to have a fire resistance rating.

18.4 Special Provisions.

18.4.1 Limited Access or Underground Structures. Limited access or underground structures shall comply with Chapter 31.

18.4.2 High-Rise Buildings. High-rise buildings that house day-care occupancies on floors more than 75 ft (23 m) above the lowest level of fire department vehicle access shall comply with Chapter 33.

18.4.3 Flexible Plan and Open Plan Buildings.

18.4.3.1 Flexible plan and open plan buildings shall comply with the requirements of this chapter, as modified by 18.4.3.2 through 18.4.3.4.

18.4.3.2 Each room occupied by more than 300 persons shall have 2 or more means of egress entering into separate atmospheres. Where 3 or more means of egress are required, not more than 2 such means of egress shall enter into the same common atmosphere.

18.4.3.3 Flexible plan buildings shall be permitted to have walls and partitions rearranged periodically only if revised plans or diagrams have been approved by the authority having jurisdiction.

18.4.3.4 Flexible plan buildings shall be evaluated while all folding walls are extended and in use, as well as when they are in the retracted position.

18.5 Building Services.

18.5.1 Utilities.

18.5.1.1 Utilities shall comply with the provisions of Chapters 49, 52, and 53.

18.5.1.2 Special protective covers for all electrical receptacles shall be installed in all areas occupied by clients.

18.5.2 Heating, Ventilating, and Air-Conditioning Equipment.

18.5.2.1 Heating, ventilating, and air-conditioning equipment shall comply with the provisions of Chapters 50 and 51.

18.5.2.2 Unvented fuel-fired room heaters shall be prohibited.

Copyright National Fire Protection Association
Provided by IHS under license with NFPA
No reproduction or networking permitted without license from IHS
Not for Resale

18.5.2.3 The requirement of 18.5.2.2 shall not apply to gas space heaters installed in compliance with NFPA 54/ANSI Z223.1.

18.5.2.4 Any heating equipment in spaces occupied by clients shall be provided with partitions, screens, or other means to protect clients from hot surfaces and open flames. If solid partitions are used to provide such protection, provisions shall be made to ensure adequate air for combustion and ventilation for the heating equipment.

18.5.3 Elevators, Escalators, and Conveyors. Elevators, escalators, and conveyors shall comply with the provisions of Chapter 54.

18.5.4 Rubbish Chutes, Incinerators, and Laundry Chutes. Rubbish chutes, incinerators, and laundry chutes shall comply with the provisions of Section 8.17.

18.6 Day-Care Homes.

18.6.1 General Requirements.

18.6.1.1 Application.

18.6.1.1.1 The requirements of Section 18.6 shall apply to all of the following:

(1) New buildings or portions thereof used as day-care homes *(see 18.6.1.4)*
(2) Additions made to, or used as, a day-care home
(3) Alterations, modernizations, or renovations of existing day-care homes
(4) Existing buildings, or portions thereof, upon change of occupancy to a day-care home

18.6.1.1.2 Section 18.6 establishes life safety requirements for day-care homes in which more than 3, but not more than 12, clients receive care, maintenance, and supervision by other than their relative(s) or legal guardian(s) for less than 24 hours per day (generally within a dwelling unit).

18.6.1.1.3 The requirement of 18.6.1.1.2 shall not apply to facilities that supervise clients on a temporary basis with a parent or guardian in close proximity.

18.6.1.1.4 Where a facility houses more than one age group of self-preservation capability, the strictest requirements applicable to any group present shall apply throughout the day-care home or building, as applicable, unless the area housing that group is maintained as a separate area.

18.6.1.1.5 Places of religious worship shall not be required to meet the provisions of Section 18.6 to operate a nursery while services are being held in the building.

18.6.1.2 Multiple Occupancies. Multiple occupancies shall be in accordance with 18.1.2.

18.6.1.3 Special Definitions. See Chapter 3.

18.6.1.4 Classification of Occupancy–Subclassification of Day-Care Homes. Subclassification of day-care homes shall be as follows:

(1) A family day-care home shall be a day-care home in which more than 3, but fewer than 7, clients receive care, maintenance, and supervision by other than their relative(s) or legal guardian(s) for less than 24 hours per day (generally within a dwelling unit).
(2) A group day-care home shall be a day-care home in which at least 7, but not more than 12, clients receive care, maintenance, and supervision by other than their relative(s) or legal guardian(s) for less than 24 hours per day (generally within a dwelling unit).

18.6.1.5 Classification of Hazard of Contents. Classification of hazard of contents shall be in accordance with 18.1.4.

18.6.1.6 Location. No day-care home shall be located more than one story below the level of exit discharge.

18.6.1.7 Occupant Load.

18.6.1.7.1 In family day-care homes, the minimum staff-to-client ratio shall be not less than one staff person for up to six clients, including the caretaker's own children under age 6. There shall be not more than two clients incapable of self-preservation.

18.6.1.7.2 In group day-care homes, the minimum staff-to-client ratio shall be not less than 2 staff persons for up to 12 clients. There shall be not more than 3 clients incapable of self-preservation. The staff-to-client ratio shall be permitted to be modified by the authority having jurisdiction where safeguards in addition to those specified by Section 18.6 are provided.

18.6.2 Means of Escape Requirements.

18.6.2.1 General. Means of escape shall comply with Section 22.2.

18.6.2.2 Reserved.

18.6.2.3 Reserved.

18.6.2.4 Number of Means of Escape. The number of means of escape shall comply with Section 22.2 and 18.6.2.4.1 through 18.6.2.4.4.

18.6.2.4.1 In group day-care homes, every story occupied by clients shall have not less than two remotely located means of escape.

18.6.2.4.2 Every room used for sleeping, living, or dining purposes shall have at least two means of escape, at least one of which shall be a door or stairway providing a means of unobstructed travel to the outside of the building at street or ground level. The second means of escape shall be permitted to be a window in accordance with 18.2.11.1. No room or space that is accessible only by a ladder or folding stairs, or through a trap door, shall be occupied for living or sleeping purposes.

18.6.2.4.3 In group day-care homes, where spaces on the story above the story of exit discharge are used by clients, at least one means of escape shall be an exit discharging directly to the outside. The second means of escape shall be permitted to be a window in accordance with 18.2.11.1.

18.6.2.4.4 Where clients are occupying a story below the level of exit discharge, at least one means of escape shall be an exit discharging directly to the outside, and the vertical travel to ground level shall not exceed 8 ft (244 cm). The second means of escape shall be permitted to be a window in accordance with 18.2.11.1.

18.6.2.5 Arrangement of Means of Egress.

18.6.2.5.1 Where a story above or below the level of exit discharge is used, the requirements of 18.6.2.4 shall apply.

18.6.2.5.2 For group day-care homes, means of egress shall be arranged in accordance with Section 11.5.

Copyright National Fire Protection Association
Provided by IHS under license with NFPA
No reproduction or networking permitted without license from IHS
Not for Resale

18.6.2.5.3 Dead-end corridors shall not exceed 20 ft (6100 mm).

18.6.2.6 Travel Distance. Requirements for travel distances shall be as follows:

(1) The travel distance between any room door intended as an exit access and an exit shall not exceed 100 ft (30 m).
(2) The travel distance between any point in a room and an exit shall not exceed 150 ft (45 m).
(3) The travel distance between any point in a sleeping room and an exit access to that room shall not exceed 50 ft (15 m).
(4) The travel distance specified in 18.6.2.6(1) and (2) shall be permitted to be increased by 50 ft (15 m) in buildings protected throughout by an approved, electrically supervised automatic sprinkler system installed in accordance with Section 55.3.

18.6.2.7 Discharge from Exits. Discharge from exits shall be in accordance with 18.6.2.4.

18.6.2.8 Illumination of Means of Egress. Illumination of the means of egress shall be provided in accordance with Section 11.8.

18.6.2.9 Emergency Lighting. (No requirements)

18.6.2.10 Marking of Means of Egress. (No requirements)

18.6.3 Protection.

18.6.3.1 Protection of Vertical Openings. For group day-care homes, the doorway between the level of exit discharge and any story below shall be equipped with a door assembly having a 20-minute fire protection rating. Where the story above the level of exit discharge is used for sleeping purposes, there shall be a door assembly having a 20-minute fire protection rating at the top or bottom of each stairway.

18.6.3.2 Hazardous Area Protection. (No requirements)

18.6.3.3 Interior Finish.

18.6.3.3.1 General. Interior finish shall be in accordance with Chapter 10.

18.6.3.3.2 Interior Wall and Ceiling Finish.

18.6.3.3.2.1 In group day-care homes, interior wall and ceiling finish materials in accordance with Chapter 10 shall be Class A or Class B in corridors, stairways, lobbies, and exits. In family day-care homes, interior wall and ceiling finish materials in accordance with Chapter 10 shall be Class A or Class B in exits.

18.6.3.3.2.2 Interior wall and ceiling finish materials in accordance with Chapter 10 shall be Class A, Class B, or Class C in occupied spaces.

18.6.3.3.3 Interior Floor Finish. (No requirements)

18.6.3.4 Detection, Alarm, and Communications Systems.

18.6.3.4.1 Smoke alarms shall be installed within day-care homes in accordance with 55.2.2.6.

18.6.3.4.2 Where the day-care home is located within a building of another occupancy, such as in an apartment building or office building, any corridors serving the day-care home shall be provided with a smoke detection system in accordance with Section 55.2.

18.6.3.4.3 Single-station or multiple-station smoke alarms in accordance with 55.2.2.6 and powered by the building electrical system, or system detectors with integral sounding devices in accordance with Section 55.2, shall be provided in all rooms used for sleeping.

Chapter 19 Health Care Occupancies

19.1 General Requirements.

19.1.1 Application.

19.1.1.1 General.

19.1.1.1.1 The requirements of this chapter shall apply to new buildings or portions thereof used as a health care occupancy.

19.1.1.1.2* The requirements of this chapter shall not apply to facilities where the authority having jurisdiction has determined equivalent safety has been provided in accordance with Section 1.5.

19.1.1.1.3 Repairs, renovations, modifications, additions, and reconstruction of a health care occupancy, and changes of use, including change of occupancy classification to a health care occupancy, or correction of a damaged or unsafe portion of the building containing the health care occupancy, shall comply with one of the following:

(1) Provisions of this chapter
(2) Provisions of Chapter 15

19.1.1.1.3.1 The requirements of this chapter, where referenced by Chapter 15, shall not apply to additions classified as occupancies other than health care that are separated from the health care occupancy in accordance with 19.1.1.4.1 and conform to the requirements for the specific occupancy in accordance with Chapters 16 through 18 and Chapters 20 through 30, as appropriate.

19.1.1.1.3.2 The requirements of 19.1.1.1.3 shall not apply to facilities where the authority having jurisdiction has determined that equivalent safety has been provided in accordance with Section 1.5.

19.1.1.1.4 Health care facilities regulated by this chapter shall be understood to be those facilities that provide sleeping accommodations for their occupants and are occupied by persons who are mostly incapable of self-preservation because of age, because of physical or mental disability, or because of security measures not under the occupants' control.

19.1.1.1.5 Buildings, or sections of buildings, that primarily house patients who, in the opinion of the governing body of the facility and the governmental agency having jurisdiction, are capable of judgment and appropriate physical action for self-preservation under emergency conditions shall be permitted to comply with chapters of this *Code* other than this chapter.

19.1.1.1.6 It shall be recognized that, in buildings housing certain types of patients or having detention rooms or a security section, it might be necessary to lock doors and bar windows to confine and protect building inhabitants. In such instances, the authority having jurisdiction shall make appropriate modifications to those sections of this *Code* that would otherwise require means of egress to be kept unlocked.

19.1.1.1.7 Buildings, or sections of buildings, that house older persons and that provide activities that foster continued independence, but that do not include services distinctive to

Copyright National Fire Protection Association
Provided by IHS under license with NFPA
No reproduction or networking permitted without license from IHS
Not for Resale

health care occupancies, shall be permitted to comply with the requirements of other chapters of this *Code*.

19.1.1.1.8 Facilities that do not provide housing on a 24-hour basis for their occupants shall be classified as other occupancies and shall be covered by other chapters of this *Code*.

19.1.1.1.9* It shall be recognized that the requirements of this chapter are based on the assumption that staff is available in all patient-occupied areas to perform certain fire safety functions.

19.1.1.2* Goals and Objectives. The goals and objectives of Section 4.1 shall be met with due consideration for functional requirements.

19.1.1.3 Total Concept. All health care facilities shall be designed and constructed to minimize the possibility of a fire emergency requiring the evacuation of occupants. Because the safety of health care occupants cannot be ensured adequately by dependence on evacuation of the building, their protection from fire shall be provided by appropriate arrangement of facilities; adequate, trained staff; and development of operating and maintenance procedures composed of the following:

(1) Design, construction, and compartmentation
(2) Provision for detection, alarm, and extinguishment
(3) Fire prevention; and planning, training, and drilling in programs for the isolation of fire, transfer of occupants to areas of refuge, or evacuation of the building

19.1.1.4 Additions, Conversions, Modernization, Renovation, and Construction Operations.

19.1.1.4.1 Additions. Additions shall be separated from any existing structure not conforming to the requirements for health care occupancies by a fire barrier having not less than a 2-hour fire resistance rating and constructed of materials as required for the addition.

19.1.1.4.1.1 Communicating openings in dividing fire barriers required by 19.1.1.4.1 shall be permitted only in corridors and shall be protected by approved, self-closing fire door assemblies.

19.1.1.4.1.2 Doors in barriers required by 19.1.1.4.1 shall normally be kept closed.

19.1.1.4.1.3 Doors in barriers required by 19.1.1.4.1 shall be permitted to be held open if they meet the requirements of 19.2.2.2.7.

19.1.1.4.2 Changes of Occupancy. Changes of occupancy shall comply with 4.5.6. A change from one health care occupancy subclassification to another shall require compliance with the requirements of 4.5.6, unless otherwise permitted by the following:

(1) A change from a hospital to a nursing home or from a nursing home to a hospital shall not be considered a change in occupancy or occupancy subclassification.
(2) A change from a hospital or nursing home to a limited care facility shall not be considered a change in occupancy or occupancy subclassification.
(3) A change from a hospital or nursing home to an ambulatory health care facility shall not be considered a change in occupancy or occupancy subclassification.

19.1.1.4.3* Building Rehabilitation. Where Chapter 15 requires compliance with this paragraph, the automatic sprinkler requirements of 19.3.5 shall apply to a smoke compartment undergoing the rehabilitation. However, in cases where the building is not protected throughout by an approved automatic sprinkler system, the requirements for nonsprinklered buildings contained in 19.4.3 shall also apply.

19.1.2 Multiple Occupancies.

19.1.2.1 Multiple occupancies shall be in accordance with Section 6.2 and 19.1.2. Where there are differences in the specific requirements in this chapter and provisions for mixed occupancies or separated occupancies as specified in 6.2.3 and 6.2.4, the requirements of this chapter shall apply. *(See 4.3.2.3.)*

19.1.2.2* Sections of health care facilities shall be permitted to be classified as other occupancies, provided that they meet both of the following conditions:

(1) They are not intended to serve health care occupants for purposes of housing, treatment, or customary access by patients incapable of self-preservation.
(2) They are separated from areas of health care occupancies by construction having a fire resistance rating of not less than 2 hours.

19.1.2.3* Ambulatory care facilities, medical clinics, and similar facilities that are contiguous to health care occupancies, but that are primarily intended to provide outpatient services, shall be permitted to be classified as business occupancies or ambulatory health care facilities, provided that the facilities are separated from the health care occupancy by not less than 2-hour fire resistance–rated construction and the facility is not intended to provide services simultaneously for four or more inpatients who are litterborne.

19.1.2.4 Health care occupancies in buildings housing other occupancies shall be completely separated from such buildings by construction in accordance with 6.2.4, with communicating openings permitted only in corridors, and only by approved, self-closing fire door assemblies.

19.1.2.5 All means of egress from health care occupancies that traverse non-health-care spaces shall conform to the requirements of this *Code* for health care occupancies.

19.1.2.5.1 Egress through a horizontal exit into other contiguous occupancies that do not conform with health care egress provisions, but that do comply with requirements set forth in the appropriate occupancy chapter of this *Code*, shall be permitted, provided that the occupancy does not contain high hazard contents exceeding the maximum allowable quantities per control area as set forth in 34.1.3, other than Level 4 hazardous areas.

19.1.2.5.2 The horizontal exit specified in 19.1.2.5.1 shall comply with the requirements of 19.2.2.5.

19.1.2.6 Egress provisions for areas of health care facilities that correspond to other occupancies shall meet the corresponding requirements of this *Code* for such occupancies. Where the clinical needs of the occupant necessitate the locking of means of egress, staff shall be present for the supervised release of occupants during all times of use.

19.1.2.7 Auditoriums, chapels, staff residential areas, or other occupancies provided in connection with health care facilities shall have means of egress provided in accordance with other applicable sections of this *Code*.

Copyright National Fire Protection Association
Provided by IHS under license with NFPA
No reproduction or networking permitted without license from IHS
Not for Resale

19.1.2.8 Any area with a hazard of contents classified higher than that of the health care occupancy and located in the same building shall be protected as required in 19.3.2.

19.1.2.9 Non-health care–related occupancies classified as containing high hazard contents exceeding the maximum allowable quantities per control area as set forth in 34.1.3 shall not be permitted in buildings housing health care occupancies.

19.1.3 Classification of Occupancy. Classification of occupancy shall be in accordance with 6.1.5.

19.1.4 Classification of Hazard of Contents.

19.1.4.1 Hazard of contents shall be classified in accordance with 6.3.2.

19.1.4.2 Buildings or areas in which high hazard contents are stored, used, or handled shall comply with Chapter 34.

19.1.5 Reserved.

19.1.6 Minimum Construction Requirements.

19.1.6.1 Construction shall be in accordance with all of the following, except as modified by 19.1.6.2 and 19.1.6.4:

(1) Chapter 7, Construction Types and Height and Area Requirements
(2) Chapter 8, Fire-Resistive Materials and Construction
(3) Chapter 13, Encroachments into the Public Right-of-Way
(4) Chapter 14, Safeguards During Construction
(5) Chapter 31, Occupancies in Special Structures
(6) Chapter 35, Structural Design
(7) Chapter 36, Soils, Foundations, and Retaining Walls
(8) Chapter 37, Exterior Wall Construction
(9) Chapter 38, Roof Assemblies and Roof Structures
(10) Chapter 39, Flood-Resistant Design and Construction
(11) Chapter 40, Quality Assurance During Construction

19.1.6.2 Any building of Type I(442), Type I(332), Type II(222), or Type II(111) construction shall be permitted to include roofing systems involving combustible supports, decking, or roofing, provided that the following criteria are met:

(1) The roof covering meets Class A requirements in accordance with NFPA 256, *Standard Methods of Fire Tests of Roof Coverings*.
(2) The roof is separated from all occupied portions of the building by a noncombustible floor assembly having not less than a 2-hour fire resistance rating that includes not less than 2½ in. (63 mm) of concrete or gypsum fill.
(3) Structural elements supporting the 2-hour fire resistance–rated floor assembly specified in 19.1.6.2(2) are required to have only the fire resistance rating of the building.

19.1.6.3 Any building of Type I(442), Type I(332), Type II(222), or Type II(111) construction shall be permitted to include roofing systems involving combustible supports, decking, or roofing, provided that the following criteria are met:

(1) The roof covering shall meet Class A requirements in accordance with NFPA 256.
(2) The roof-ceiling assembly shall be constructed with fire-retardant-treated wood meeting the requirements of this *Code*.
(3) The roof-ceiling assembly shall have the required fire resistance rating for the type of construction.

19.1.6.4 Levels below the level of exit discharge shall be separated from the level of exit discharge by not less than Type II(111) construction.

19.1.7 Occupant Load. The occupant load, in number of persons for whom means of egress and other provisions are required, shall be determined on the basis of the occupant load factors of Table 11.3.1.2 that are characteristic of the use of the space, or shall be determined as the maximum probable population of the space under consideration, whichever is greater.

19.1.8 Accessibility. Accessibility shall be in accordance with Chapter 12.

19.2 Means of Egress Requirements.

19.2.1 General. Every aisle, passageway, corridor, exit discharge, exit location, and access shall be in accordance with Chapter 11, unless otherwise modified by 19.2.2 through 19.2.10.

19.2.2* Means of Egress Components.

19.2.2.1 General. Components of means of egress shall be limited to the types described in 19.2.2.2 through 19.2.2.10.

19.2.2.2 Doors.

19.2.2.2.1 Doors complying with 11.2.1 shall be permitted.

19.2.2.2.2 Locks shall not be permitted on patient sleeping room doors, unless otherwise permitted by the following:

(1) Key-locking devices that restrict access to the room from the corridor and that are operable only by staff from the corridor side shall be permitted, and such devices shall not restrict egress from the room.
(2) Door-locking arrangements shall be permitted in health care occupancies, or portions of health care occupancies, where the clinical needs of the patients require specialized security measures for their safety, provided that keys are carried by staff at all times.

19.2.2.2.3 Doors not located in a required means of egress shall be permitted to be subject to locking.

19.2.2.2.4 Doors within a required means of egress shall not be equipped with a latch or lock that requires the use of a tool or key from the egress side, unless otherwise permitted by the following:

(1) Door-locking arrangements without delayed egress shall be permitted in health care occupancies, or portions of health care occupancies, where the clinical needs of the patients require specialized security measures for their safety, provided that staff can readily unlock such doors at all times. *(See 19.1.1.1.6 and 19.2.2.2.5.)*
(2)*Delayed-egress locks complying with 11.2.1.6.1 shall be permitted, provided that not more than one such device is located in any egress path.
(3) Access-controlled egress doors complying with 11.2.1.6.2 shall be permitted.

19.2.2.2.5 Doors located in the means of egress that are permitted to be locked under other provisions of this chapter shall have adequate provisions made for the rapid removal of occupants by means such as remote control of locks, keying of all locks to keys carried by staff at all times, or other such reliable means available to the staff at all times. Only one such locking device shall be permitted on each door.

Copyright National Fire Protection Association
Provided by IHS under license with NFPA
No reproduction or networking permitted without license from IHS
Not for Resale

19.2.2.2.6 The requirements of 19.2.2.2.5 shall not apply to locks in accordance with 19.2.2.2.4(2) and (3).

19.2.2.2.7* Any door in an exit passageway, stairway enclosure, horizontal exit, smoke barrier, or hazardous area enclosure (except boiler rooms, heater rooms, and mechanical equipment rooms) shall be permitted to be held open only by an automatic release device that complies with 11.2.1.8.2. The automatic sprinkler system and the fire alarm system, and the systems required by 11.2.1.8.2, shall be arranged to initiate the closing action of all such doors throughout the smoke compartment or throughout the entire facility.

19.2.2.2.8 Where doors in a stair enclosure are held open by an automatic release device as permitted in 19.2.2.2.7, initiation of a door-closing action on any level shall cause all doors at all levels in the stair enclosure to close.

19.2.2.2.9 High-rise health care occupancies shall comply with the re-entry provisions of 11.2.1.5.8.

19.2.2.2.10 Horizontal-sliding doors shall be permitted in accordance with 19.2.2.2.10.1 or 19.2.2.2.10.2.

19.2.2.2.10.1 Horizontal-sliding doors, as permitted by 11.2.1.14, that are not automatic-closing shall be limited to a single leaf and shall have a latch or other mechanism that ensures that the doors will not rebound into a partially open position if forcefully closed.

19.2.2.2.10.2 Horizontal-sliding doors serving an occupant load of fewer than 10 shall be permitted, provided that all of the following criteria are met:

(1) The area served by the door has no high hazard contents.
(2) The door is readily operable from either side without special knowledge or effort.
(3) The force required to operate the door in the direction of door travel is not more than 30 lbf (133 N) to set the door in motion and is not more than 15 lbf (67 N) to close the door or open it to the minimum required width.
(4) The door assembly complies with the fire protection rating, if required, and, where rated, is self-closing or automatic-closing by means of smoke detection in accordance with 11.2.1.8 and is installed in accordance with NFPA 80, *Standard for Fire Doors and Fire Windows*.
(5) Corridor doors are equipped with a latch or other mechanism that ensures that the doors will not rebound into a partially open position if forcefully closed.

19.2.2.3 Stairs. Stairs complying with 11.2.2 shall be permitted.

19.2.2.4 Smokeproof Enclosures. Smokeproof enclosures complying with 11.2.3 shall be permitted.

19.2.2.5 Horizontal Exits. Horizontal exits complying with 11.2.4 and the modifications of 19.2.2.5.1 through 19.2.2.5.6 shall be permitted.

19.2.2.5.1 Not less than 30 net ft^2 (2.8 net m^2) per patient in a hospital or nursing home, or not less than 15 net ft^2 (1.4 net m^2) per resident in a limited care facility, shall be provided within the aggregated area of corridors, patient rooms, treatment rooms, lounge or dining areas, and other similar areas on each side of the horizontal exit. On stories not housing patients confined to beds or litterborne patients, not less than 6 net ft^2 (0.56 net m^2) per occupant shall be provided on each side of the horizontal exit for the total number of occupants in adjoining compartments.

19.2.2.5.2 The total egress capacity of the other exits (stairs, ramps, doors leading outside the building) shall not be reduced below one-third of that required for the entire area of the building.

19.2.2.5.3 A single door shall be permitted in a horizontal exit if the exit serves one direction only. Such door shall be a swinging door or a horizontal-sliding door complying with 11.2.1.14. The door shall have not less than 41½ in. (1055 mm) in clear width.

19.2.2.5.4 A horizontal exit involving a corridor 8 ft (2440 mm) or more in width, serving as a means of egress from both sides of the doorway, shall have the opening protected by a pair of swinging doors arranged to swing in opposite directions from each other, with each door having a clear width of not less than 41½ in. (1055 mm), or by a horizontal-sliding door complying with 11.2.1.14 that provides a clear width of not less than 6 ft 11 in. (2110 mm).

19.2.2.5.5 A horizontal exit involving a corridor 6 ft (1830 mm) or more in width, serving as a means of egress from both sides of the doorway, shall have the opening protected by a pair of swinging doors arranged to swing in opposite directions from each other, with each door having a clear width of not less than 32 in. (810 mm), or by a horizontal-sliding door complying with 11.2.1.14 that provides a clear width of not less than 64 in. (1625 mm).

19.2.2.5.6 An approved vision panel shall be required in each horizontal exit. Center mullions shall be prohibited.

19.2.2.6 Ramps. Ramps complying with 11.2.5 shall be permitted.

19.2.2.7 Exit Passageways. Exit passageways complying with 11.2.6 shall be permitted.

19.2.2.8 Fire Escape Ladders. Fire escape ladders complying with 11.2.9 shall be permitted.

19.2.2.9 Alternating Tread Devices. Alternating tread devices complying with 11.2.11 shall be permitted.

19.2.2.10 Areas of Refuge. Areas of refuge used as part of a required accessible means of egress shall comply with 11.2.12.

19.2.3 Capacity of Means of Egress.

19.2.3.1 The capacity of any required means of egress shall be in accordance with 11.3.3, as modified by 19.2.3.2 through 19.2.3.6.

19.2.3.2 The capacity of means of egress shall be in accordance with Section 11.3.

19.2.3.3* Aisles, corridors, and ramps required for exit access in a hospital or nursing home shall be not less than 8 ft (2440 mm) in clear and unobstructed width, unless otherwise permitted by the following:

(1) Where ramps are used as exits, the requirement of 19.2.2.6 shall apply.
(2)* Aisles, corridors, and ramps in adjunct areas not intended for the housing, treatment, or use of inpatients shall be not less than 44 in. (1120 mm) in clear and unobstructed width.
(3) Where minimum corridor width is 6 ft (1830 mm), projections not exceeding 6 in. (150 mm) from the corridor wall, above the handrail height, shall be permitted for the installation of hand-rub dispensing units in accordance with 19.2.3.6.

Copyright National Fire Protection Association
Provided by IHS under license with NFPA
No reproduction or networking permitted without license from IHS
Not for Resale

(4) Where minimum corridor width is 6 ft (1830 mm), projections shall be permitted in corridors, at both sides of the corridor, as follows:
   (a) Each projection shall not exceed a depth of 6 in. (150 mm).
   (b) Each projection shall not exceed a length of 36 in. (915 mm).
   (c) Each projection shall be positioned not less than 40 in. (1015 mm) above the floor.
   (d) Each projection shall have a minimum 48 in. (1220 mm) horizontal separation from adjacent projections.

(5) *The requirement of 19.2.3.3 shall not apply to exit access within a room or suite of rooms complying with the requirements of 19.2.5.

19.2.3.4 Aisles, corridors, and ramps required for exit access in a limited care facility or hospital for psychiatric care shall be not less than 6 ft (1830 mm) in clear and unobstructed width, unless otherwise permitted by the following:

(1) *Aisles, corridors, and ramps in adjunct areas not intended for the housing, treatment, or use of inpatients shall be not less than 44 in. (1120 mm) in clear and unobstructed width.
(2) Where minimum corridor width is 6 ft (1830 mm), projections not exceeding 6 in. (150 mm) from the corridor wall, above the handrail height, shall be permitted for the installation of hand-rub dispensing units in accordance with 19.3.2.6.
(3) Where minimum corridor width is 6 ft (1830 mm), projections shall be permitted in corridors, at both sides of the corridor, as follows:
   (a) Each projection shall not exceed a depth of 6 in. (150 mm).
   (b) Each projection shall not exceed a length of 36 in. (915 mm).
   (c) Each projection shall be positioned not less than 40 in. (1015 mm) above the floor.
   (d) Each projection shall have a minimum 48 in. (1220 mm) horizontal separation from adjacent projections.
(4) *The requirement of 19.2.3.4 shall not apply to exit access within a room or suite of rooms complying with the requirements of 19.2.5.

19.2.3.5 The minimum clear width for doors in the means of egress from sleeping rooms; diagnostic and treatment areas, such as x-ray, surgery, or physical therapy; and nursery rooms shall be as follows, unless otherwise modified by 19.2.3.6:

(1) Hospitals and nursing homes — 41½ in. (1055 mm)
(2) Psychiatric hospitals and limited care facilities — 32 in. (810 mm)

19.2.3.6 The requirements of 19.2.3.5(1) and (2) shall not apply to the following:

(1) Doors that are located so as not to be subject to use by any health care occupant shall be not less than 32 in. (810 mm) in clear width.
(2) Doors in exit stair enclosures shall be not less than 32 in. (810 mm) in clear width.
(3) Doors serving newborn nurseries shall be not less than 32 in. (810 mm) in clear width.
(4) Where a pair of doors is provided, not less than one of the doors shall provide not less than a 32 in. (810 mm) clear width opening, and a rabbet, bevel, or astragal shall be provided at the meeting edge, and the inactive leaf shall have an automatic flush bolt to provide positive latching.

19.2.4 Number of Exits.

19.2.4.1 Not less than two exits of the types described in 19.2.2.2 through 19.2.2.10, remotely located from each other, shall be provided for each floor or fire section of the building.

19.2.4.2 Not less than one exit from each floor or fire section shall be one of the following:

(1) Door leading directly outside the building
(2) Stair
(3) Smokeproof enclosure
(4) Ramp
(5) Exit passageway

19.2.4.2.1 Any fire section not meeting the requirement of 19.2.4.2 shall be considered part of an adjoining zone.

19.2.4.2.2 Egress shall not require return through the zone of fire origin.

19.2.4.3* Not less than two exits of the types described in 19.2.2.2 through 19.2.2.10 shall be accessible from each smoke compartment. Egress shall be permitted through an adjacent compartment(s) but shall not require return through the compartment of fire origin.

19.2.5 Arrangement of Means of Egress.

19.2.5.1 General. Arrangement of means of egress shall comply with Section 11.5.

19.2.5.2 Dead-End Corridors. Dead-end corridors shall not exceed 30 ft (9.1 m).

19.2.5.3* Intervening Rooms or Spaces. Every corridor shall provide access to not less than two approved exits in accordance with Sections 11.4 and 11.5 without passing through any intervening rooms or spaces other than corridors or lobbies.

19.2.5.4 Two Means of Egress. Sleeping rooms of more than 1000 ft^2 (93 m^2) shall have not less than two exit access doors remotely located from each other.

19.2.5.5 Corridor Access.

19.2.5.5.1* Every habitable room shall have an exit access door leading directly to an exit access corridor unless otherwise provided in 19.2.5.5.2 through 19.2.5.5.4.

19.2.5.5.2 Exit access from a patient sleeping room with not more than eight patient beds shall be permitted to pass through one intervening room to reach an exit access corridor, provided that the intervening room is equipped with an approved automatic smoke detection system in accordance with Section 55.2.

19.2.5.5.3 Rooms having an exit door opening directly to the outside from the room at ground level shall not be required to have an exit access door leading directly to an exit access corridor.

19.2.5.5.4 Rooms within suites complying with 19.2.5.6 shall not be required to have an exit access door leading directly to an exit access corridor.

19.2.5.6 Suites.

19.2.5.6.1 General.

19.2.5.6.1.1 Suite Permission. Suites complying with 19.2.5.6 shall be permitted to be used to meet the corridor access requirements of 19.2.5.5.

Copyright National Fire Protection Association
Provided by IHS under license with NFPA
No reproduction or networking permitted without license from IHS
Not for Resale

19.2.5.6.1.2 Suite Separation. Suites shall be separated from the remainder of the building by walls and doors meeting the requirements of 19.3.6.2 through 19.3.6.5.

19.2.5.6.1.3 Suite Hazardous Contents Areas.

(A)* Intervening rooms shall not be hazardous areas as defined by 19.3.2.

(B) Hazardous areas within a suite shall be separated from the remainder of the suite in accordance with 19.3.2.1, unless otherwise provided in 19.2.5.6.1.3(C).

(C) Hazardous areas within a suite shall not be required to be separated from the remainder of the suite where complying with all the following:

(1) The suite is primarily a hazardous area.
(2) The suite is protected by an approved automatic smoke detection system in accordance with Section 55.2.
(3) The suite is separated from the rest of the health care facility as required for a hazardous area by 19.3.2.1.

19.2.5.6.1.4 Suite Subdivision. Subdivision of suites shall be by means of noncombustible or limited-combustible partitions, and such partitions shall not be required to be fire rated.

19.2.5.6.2 Sleeping Suites.

19.2.5.6.2.1 Sleeping Suite Arrangement.

(A)* Occupants of habitable rooms within sleeping suites shall have exit access to a corridor complying with 19.3.6 without having to pass through more than one intervening room.

(B) Sleeping suites shall be provided with constant staff supervision within the suite.

(C) Sleeping suites shall be arranged in accordance with one of the following:

(1) Patient sleeping rooms within sleeping suites shall provide one of the following:
    (a) The patient sleeping rooms shall be arranged to allow for direct supervison from a normally attended location within the suite, such as is provided by glass walls, and cubicle curtains shall be permitted.
    (b) Any patient sleeping rooms without the direct supervision required by 19.2.5.6.2.1(C)(1)(a) shall be provided with smoke detection in accordance with Section 55.2 and 19.3.4.
(2) Sleeping suites shall be provided with a total coverage (complete) automatic smoke detection system in accordance with 55.2.2.3 and 19.3.4.

19.2.5.6.2.2 Sleeping Suite Number of Means of Egress.

(A) Sleeping suites of more than 1000 ft^2 (93 m^2) shall have not less than two exit access doors remotely located from each other.

(B)* One means of egress from the suite shall be directly to a corridor complying with 19.3.6.

(C)* For suites requiring two means of egress, one means of egress from the suite shall be permitted to be into another suite, provided that the separation between the suites complies with the corridor requirements of 19.3.6.2 through 19.3.6.5.

19.2.5.6.2.3 Sleeping Suite Maximum Size.

(A) Sleeping suites shall not exceed 5000 ft^2 (465 m^2), unless otherwise provided in 19.2.5.6.2.3(B).

(B) Sleeping suites shall not exceed 7500 ft^2 (700 m^2) where both of the following are provided in the suite:

(1) Direct visual supervision in accordance with 19.2.5.6.2.1(C)(1)(a)
(2) Total coverage (complete) automatic smoke detection in accordance with 55.2.2.3 and 19.3.4

19.2.5.6.2.4 Sleeping Suite Travel Distance.

(A) Travel distance between any point in a sleeping suite and an exit access door from that suite shall not exceed 100 ft (30 m).

(B) Travel distance between any point in a sleeping suite and an exit shall not exceed 200 ft (61 m).

19.2.5.6.3 Non-Sleeping Suites.

19.2.5.6.3.1* Non-Sleeping Suite Arrangement. Occupants of habitable rooms within non-sleeping suites shall have exit access to a corridor complying with 19.3.6 without having to pass through more than two intervening rooms.

19.2.5.6.3.2 Non-Sleeping Suite Number of Means of Egress.

(A) Non-sleeping suites of more than 2500 ft^2 (232 m^2) shall have not less than two exit access doors remotely located from each other.

(B)* One means of egress from the suite shall be directly to a corridor complying with 19.3.6.

(C)* For suites requiring two means of egress, one means of egress from the suite shall be permitted to be into another suite, provided that the separation between the suites complies with the corridor requirements of 19.3.6.2 through 19.3.6.5.

19.2.5.6.3.3 Non-Sleeping Suite Maximum Size. Non-sleeping suites shall not exceed 10,000 ft^2 (929 m^2).

19.2.5.6.3.4 Non-Sleeping Suite Travel Distance.

(A) Travel distance within a non-sleeping suite to an exit access door from the suite shall not exceed the following:

(1) 100 ft (30 m) where the suite is arranged with one intervening room
(2) 50 ft (15 m) where the suite is arranged with two intervening rooms

(B) Travel distance between any point in a non-sleeping suite and an exit shall not exceed 200 ft (61 m).

19.2.6 Travel Distance to Exits.

19.2.6.1 Travel distance shall be measured in accordance with Section 11.6.

19.2.6.2 Travel distance shall comply with 19.2.6.2.1 through 19.2.6.2.4.

19.2.6.2.1 The travel distance between any room door required as an exit access and an exit shall not exceed 150 ft (46 m).

19.2.6.2.2 The travel distance between any point in a room and an exit shall not exceed 200 ft (61 m).

19.2.6.2.3 The travel distance between any point in a health care sleeping room and an exit access door in that room shall not exceed 50 ft (15 m).

19.2.6.2.4 The travel distance within suites shall be in accordance with 19.2.5.6.

Copyright National Fire Protection Association
Provided by IHS under license with NFPA
No reproduction or networking permitted without license from IHS
Not for Resale

19.2.7 Discharge from Exits. Discharge from exits shall be arranged in accordance with Section 11.7.

19.2.8 Illumination of Means of Egress. Means of egress shall be illuminated in accordance with Section 11.8.

19.2.9 Emergency Lighting.

19.2.9.1 Emergency lighting shall be provided in accordance with Section 11.9.

19.2.9.2 Buildings equipped with, or in which patients require the use of, life-support systems *(see 19.5.1.3)* shall have emergency lighting equipment supplied by the life safety branch of the electrical system as described in NFPA 99, *Standard for Health Care Facilities*.

19.2.10 Marking of Means of Egress.

19.2.10.1 Means of egress shall have signs in accordance with Section 11.10.

19.2.10.2 Buildings equipped with, or in which patients require the use of, life-support systems *(see 19.5.1.3)* shall have illumination of the required exit and directional signs supplied by the life safety branch of the electrical system as described in NFPA 99.

19.2.10.3 The requirement of 19.2.10.2 shall not apply to self-luminous exit signs in accordance with 11.10.7.

19.3 Protection.

19.3.1 Protection of Vertical Openings.

19.3.1.1 Any vertical opening shall be enclosed or protected in accordance with Section 8.12. Unprotected openings in accordance with 8.12.2 shall not be permitted.

19.3.1.2 The requirements of 19.3.1.1 shall not apply where otherwise permitted by the following:

(1) Unprotected vertical openings in accordance with 8.12.4.2 shall be permitted.
(2) The provisions of 8.12.3(1)(a) shall not be permitted to apply to patient sleeping and treatment rooms.
(3) Multilevel patient sleeping areas in psychiatric facilities shall be permitted without enclosure protection between levels, provided that all the following conditions are met:
   (a) The entire normally occupied area, including all communicating floor levels, is sufficiently open and unobstructed, so that a fire or other dangerous condition in any part is obvious to the occupants or supervisory personnel in the area.
   (b) Egress capacity is sufficient to provide simultaneously for all the occupants of all communicating levels and areas, with all communicating levels in the same fire area being considered as a single floor area for purposes of determination of required egress capacity.
   (c) The height between the highest and lowest finished floor levels is not more than 13 ft (3960 mm), with the number of levels permitted to be unrestricted.

19.3.1.3 A door in a stair enclosure shall be self-closing and shall normally be kept in the closed position.

19.3.1.4 The requirement of 19.3.1.3 shall not apply to doors in stair enclosures held open under the conditions specified by 19.2.2.2.7 and 19.2.2.2.8.

19.3.2 Hazardous Area Protection.

19.3.2.1* Hazardous Areas. Any hazardous area shall be protected in accordance with Section 8.15 and Chapter 34.

Table 19.3.2.1 Hazardous Area Protection

Hazardous Area Description	Separation/Protection
Boiler and fuel-fired heater rooms	1 hour
Central/bulk laundries >100 ft^2 (>9.3 m^2)	1 hour
Laboratories employing flammable or combustible materials in quantities less than those that would be considered severe	See 19.3.6.3.4.
Laboratories that use hazardous materials that would cause classification as severe hazard in accordance with NFPA 99	1 hour
Paint shops employing hazardous substances and materials in quantities less than those that would cause classification as severe hazard	1 hour
Physical plant maintenance shops	1 hour
Soiled linen rooms	1 hour
Storage rooms >50 ft^2 (>4.6 m^2) but ≤100 ft^2 (≤9.3 m^2) storing combustible material	See 19.3.6.3.4.
Storage rooms >100 ft^2 (>9.3 m^2) storing combustible material	1 hour
Trash collection rooms	1 hour

The areas described in Table 19.3.2.1 shall be protected as indicated.

19.3.2.2* Laboratories. Laboratories employing quantities of flammable, combustible, or hazardous materials that are considered as a severe hazard shall be protected in accordance with NFPA 99.

19.3.2.3 Anesthetizing Locations. Anesthetizing locations shall be protected in accordance with NFPA 99.

19.3.2.4 Medical Gas. Medical gas storage and administration areas shall be protected in accordance with NFPA 99.

19.3.2.5 Commercial Cooking Facilities.

19.3.2.5.1 Commercial cooking facilities shall be protected in accordance with Section 55.10.

19.3.2.5.2* Where domestic cooking equipment is used for food warming or limited cooking, protection or separation of food preparation facilities shall not be required.

19.3.2.6* Alcohol-Based Hand-Rub Dispensers. Alcohol-based hand-rub dispensers shall be protected in accordance with Section 8.15 and Chapter 34, unless all of the following criteria are met:

(1) Where dispensers are installed in a corridor, the corridor shall have a width of not less than 6 ft (1830 mm).

Copyright National Fire Protection Association
Provided by IHS under license with NFPA
No reproduction or networking permitted without license from IHS
Not for Resale

(2) The maximum individual dispenser fluid capacity shall be as follows:
   (a) 0.32 gal (1.2 L) for dispensers in rooms, corridors, and areas open to corridors
   (b) 0.53 gal (2.0 L) for dispensers in suites of rooms
(3) The dispensers shall have horizontal spacing of not less than 48 in. (1220 mm) from each other.
(4) Not more than an aggregate 10 gal (37.8 L) of alcohol-based hand-rub solution shall be in use in a single smoke compartment outside of a storage cabinet.
(5) Storage of quantities greater than 5 gal (18.9 L) in a single smoke compartment shall meet the requirements of NFPA 30, *Flammable and Combustible Liquids Code.*
(6) The dispensers shall not be installed over, or directly adjacent to, an ignition source.
(7) In locations with carpeted floors, dispensers installed directly over carpeted surfaces shall be permitted only in sprinklered smoke compartments.

19.3.2.7 Rooftop Heliports. Buildings housing health care occupancies that have rooftop heliports shall be protected in accordance with NFPA 418, *Standard for Heliports.*

19.3.3 Interior Finish.

19.3.3.1 General. Interior finish shall be in accordance with Chapter 10.

19.3.3.2 Interior Wall and Ceiling Finish. Class A or Class B interior wall and ceiling finish materials in accordance with Chapter 10 shall be permitted throughout, except as indicated in 19.3.3.2.1 or 19.3.3.2.2. The provisions of 10.7.1 shall not apply.

19.3.3.2.1 Walls and ceilings shall be permitted to have Class A, Class B, or Class C interior finish in individual rooms having a capacity not exceeding four persons.

19.3.3.2.2 Corridor wall finish not exceeding 48 in. (1220 mm) in height that is restricted to the lower half of the wall shall be permitted to be Class A, Class B, or Class C.

19.3.3.3 Interior Floor Finish.

19.3.3.3.1 Interior floor finish shall comply with Section 10.6.

19.3.3.3.2 Interior floor finish in exit enclosures and exit access corridors and spaces not separated from them by walls complying with 19.3.6 shall be Class I or Class II.

19.3.3.3.3 Interior floor finish shall comply with 10.6.1 or 10.6.2, as applicable.

19.3.4 Detection, Alarm, and Communications Systems.

19.3.4.1 General. Health care occupancies shall be provided with a fire alarm system in accordance with Section 55.2.

19.3.4.2 Initiation.

19.3.4.2.1* Initiation of the required fire alarm systems shall be by manual means in accordance with 55.2.2 and by means of any required sprinkler system waterflow alarms, detection devices, or detection systems.

19.3.4.2.2 Manual fire alarm boxes in patient sleeping areas shall not be required at exits if located at all nurses' control stations or other continuously attended staff location, provided that such manual fire alarm boxes are visible and continuously accessible and that travel distances required by 55.2.2.1.4 are not exceeded.

19.3.4.3 Notification. Positive alarm sequence in accordance with 55.2.3.4 shall be permitted.

19.3.4.3.1 Occupant Notification.

19.3.4.3.1.1 Occupant notification shall be accomplished automatically in accordance with 55.2.3. Use of the provisions of 55.2.3.2.3 shall be prohibited.

19.3.4.3.1.2* In lieu of audible alarm signals, visible alarm-indicating appliances shall be permitted to be used in critical care areas.

19.3.4.3.2 Emergency Forces Notification. Fire department notification shall be accomplished in accordance with 55.2.4.

19.3.4.3.3 Annunciation and Annunciation Zoning.

19.3.4.3.3.1 Annunciation and annunciation zoning shall be provided in accordance with 55.2.7 and 55.2.8, respectively.

19.3.4.3.3.2 The alarm zone shall be permitted to coincide with the permitted area for smoke compartments.

19.3.4.4 Fire Safety Functions. Operation of any activating device in the required fire alarm system shall be arranged to accomplish automatically, without delay, any control functions required to be performed by that device. *(See 55.2.5.)*

19.3.4.5 Detection.

19.3.4.5.1 General. Detection systems, where required, shall be in accordance with Section 55.2.

19.3.4.5.2 Detection in Spaces Open to Corridors. Detection in spaces open to corridors shall be in accordance with 19.3.6.1.

19.3.4.5.3* Nursing Homes. An approved automatic smoke detection system shall be installed in corridors throughout smoke compartments containing patient sleeping rooms and in spaces open to corridors as permitted in nursing homes by 19.3.6.1, unless otherwise permitted by the following:

(1) Corridor systems shall not be required where each patient sleeping room is protected by an approved smoke detection system.
(2) Corridor systems shall not be required where patient room doors are equipped with automatic door-closing devices with integral smoke detectors on the room side installed in accordance with their listing, provided that the integral detectors provide occupant notification.

19.3.5 Extinguishment Requirements.

19.3.5.1* Buildings containing health care facilities shall be protected throughout by an approved, electrically supervised automatic sprinkler system in accordance with Section 55.3.

19.3.5.2 In Type I and Type II construction, alternative protection measures shall be permitted to be substituted for sprinkler protection required by 19.3.5.1 in specified areas where the authority having jurisdiction has prohibited sprinklers, and such alternative measures shall not be considered as causing a building to be classified as nonsprinklered.

19.3.5.3* Listed quick-response or listed residential sprinklers shall be used throughout smoke compartments containing patient sleeping rooms.

19.3.5.4 Where another provision of this chapter requires an automatic sprinkler system to be electrically supervised, the sprinkler system shall be electrically supervised in accordance with 55.3.2.

Copyright National Fire Protection Association
Provided by IHS under license with NFPA
No reproduction or networking permitted without license from IHS
Not for Resale

19.3.5.5* Sprinklers in areas where cubicle curtains are installed shall be in accordance with NFPA 13, *Standard for the Installation of Sprinkler Systems*.

19.3.5.6 Class I standpipes in accordance with Section 55.4 shall be provided in buildings where any of the following conditions exist:

(1) An occupiable area is more than 200 ft (61 m) from the nearest point of fire department vehicle access in other than buildings protected throughout by an approved, electrically supervised automatic sprinkler system in accordance with Section 55.3.
(2) An occupiable floor level is more than 30 ft (9.1 m) above or below the level of fire department vehicle access.

19.3.5.7 Portable fire extinguishers shall be provided in all health care occupancies in accordance with Section 55.6.

19.3.6 Corridors.

19.3.6.1 General. Corridors shall be separated from all other areas by partitions complying with 19.3.6.2 through 19.3.6.5 *(see also 19.2.5.3)*, unless otherwise permitted by the following:

(1) Spaces shall be permitted to be unlimited in area and open to the corridor, provided that the following criteria are met:
   (a) The spaces are not used for patient sleeping rooms, treatment rooms, or hazardous areas.
   (b) The corridors onto which the spaces open in the same smoke compartment are protected by an electrically supervised automatic smoke detection system in accordance with 19.3.4, or the smoke compartment in which the space is located is protected throughout by quick-response sprinklers.
   (c) The open space is protected by an electrically supervised automatic smoke detection system in accordance with 19.3.4, or the entire space is arranged and located to allow direct supervision by the facility staff from a nurses' station or similar space.
   (d) The space does not obstruct access to required exits.
(2) Waiting areas shall be permitted to be open to the corridor, provided that the following criteria are met:
   (a) The aggregate waiting area in each smoke compartment does not exceed 600 ft^2 (55.7 m^2).
   (b) Each area is protected by an electrically supervised automatic smoke detection system in accordance with 19.3.4, or each area is arranged and located to allow direct supervision by the facility staff from a nursing station or similar space.
   (c) The area does not obstruct access to required exits.
(3) *The requirement of 19.3.6.1 shall not apply to spaces for nurses' stations.
(4) Gift shops not exceeding 500 ft^2 (46.5 m^2) shall be permitted to be open to the corridor or lobby.
(5) In a limited care facility, group meeting or multipurpose therapeutic spaces shall be permitted to open to the corridor, provided that the following criteria are met:
   (a) The space is not a hazardous area.
   (b) The space is protected by an electrically supervised automatic smoke detection system in accordance with 19.3.4, or the space is arranged and located to allow direct supervision by the facility staff from the nurses' station or similar location.
   (c) The area does not obstruct access to required exits.

19.3.6.2* Construction of Corridor Walls. Corridor walls shall form a barrier to limit the transfer of smoke. Such walls shall be permitted to terminate at the ceiling where the ceiling is constructed to limit the transfer of smoke. No fire resistance rating shall be required for corridor walls.

19.3.6.3* Corridor Doors.

19.3.6.3.1* Doors protecting corridor openings shall be constructed to resist the passage of smoke.

19.3.6.3.1.1 Compliance with NFPA 80 shall not be required.

19.3.6.3.1.2 Clearance between the bottom of the door and the floor covering not exceeding 1 in. (25 mm) shall be permitted for corridor doors.

19.3.6.3.1.3 The requirements of 19.3.6.3.1 shall not apply to doors to toilet rooms, bathrooms, shower rooms, sink closets, and similar auxiliary spaces that do not contain flammable or combustible materials.

19.3.6.3.2 Doors shall be provided with positive latching hardware.

19.3.6.3.2.1 Roller latches shall be prohibited.

19.3.6.3.2.2 The requirements of 19.3.6.3.2 and 19.3.6.3.2.1 shall not apply to doors to toilet rooms, bathrooms, shower rooms, sink closets, and similar auxiliary spaces that do not contain flammable or combustible materials.

19.3.6.3.3* Doors shall not be held open by devices other than those that release when the door is pushed or pulled.

19.3.6.3.4 Door-closing devices shall not be required on doors in corridor wall openings, other than those serving required exits, smoke barriers, or enclosures of vertical openings and hazardous areas.

19.3.6.3.5* Nonrated, factory- or field-applied protective plates, unlimited in height, shall be permitted.

19.3.6.3.6 Dutch doors shall be permitted where they conform to 19.3.6.3. In addition, both the upper leaf and lower leaf shall be equipped with a latching device, and the meeting edges of the upper and lower leaves shall be equipped with an astragal, a rabbet, or a bevel. Dutch doors protecting openings in enclosures around hazardous areas shall comply with NFPA 80.

19.3.6.4 Transfer Grilles.

19.3.6.4.1 Transfer grilles, regardless of whether they are protected by fusible link–operated dampers, shall not be used in corridor walls or doors.

19.3.6.4.2 Doors to toilet rooms, bathrooms, shower rooms, sink closets, and similar auxiliary spaces that do not contain flammable or combustible materials shall be permitted to have ventilating louvers or to be undercut.

19.3.6.5 Openings. In other than smoke compartments containing patient bedrooms, miscellaneous openings, such as mail slots, pharmacy pass-through windows, laboratory pass-through windows, and cashier pass-through windows, shall be permitted to be installed in vision panels or doors without special protection, provided that the aggregate area of openings per room does not exceed 80 $in.^2$ (0.05 m^2) and the openings are installed at or below one-half the distance from the floor to the room ceiling.

Copyright National Fire Protection Association
Provided by IHS under license with NFPA
No reproduction or networking permitted without license from IHS
Not for Resale

19.3.7* Subdivision of Building Spaces.

19.3.7.1 Buildings containing health care facilities shall be subdivided by smoke barriers as specified in 19.3.7.1.1 through 19.3.7.1.6.

19.3.7.1.1 Every story used by inpatients for sleeping or treatment shall be divided into not less than two smoke compartments.

19.3.7.1.2 Every story having an occupant load of 50 or more persons, regardless of use, shall be divided into not less than 2 smoke compartments.

19.3.7.1.3 The size of each smoke compartment required by 19.3.7.1.1 and 19.3.7.1.2 shall be limited to an area not exceeding 22,500 ft^2 (2100 m^2).

19.3.7.1.4 The area of an atrium separated in accordance with 8.12.3 shall not be limited in size.

19.3.7.1.5 The travel distance from any point to reach a door in the required smoke barrier shall be limited to a distance not exceeding 200 ft (61 m).

19.3.7.1.6 The requirements of 19.3.7.1.1 through 19.3.7.1.5 shall not apply to the following:

(1) Stories that do not contain a health care occupancy and that are located directly above the health care occupancy
(2) Areas that do not contain a health care occupancy and that are separated from the health care occupancy by a fire barrier complying with 11.2.4.3
(3) Stories that do not contain health care occupancies and that are more than one story below the health care occupancy
(4) Open-air parking structures protected throughout by an approved, electrically supervised automatic sprinkler system in accordance with Section 55.3

19.3.7.2 Smoke barriers shall be provided on stories that are usable but unoccupied.

19.3.7.3 Any required smoke barrier shall be constructed in accordance with Section 8.11 and shall have a fire resistance rating of not less than 1 hour.

19.3.7.3.1 Where an atrium is used, smoke barriers shall be permitted to terminate at an atrium wall constructed in accordance with 8.12.3(1)(b). Not less than two separate smoke compartments shall be provided on each floor.

19.3.7.3.2* Smoke dampers shall not be required in duct penetrations of smoke barriers in fully ducted heating, ventilating, and air-conditioning systems for buildings protected throughout by an approved, electrically supervised automatic sprinkler system in accordance with Section 55.3.

19.3.7.4 Not less than 30 net ft^2 (2.8 net m^2) per patient in a hospital or nursing home, or not less than 15 net ft^2 (1.4 net m^2) per resident in a limited care facility, shall be provided within the aggregate area of corridors, patient rooms, treatment rooms, lounge or dining areas, and other common areas on each side of the smoke barrier. On stories not housing patients confined to beds or litterborne patients, not less than 6 net ft^2 (0.56 net m^2) per occupant shall be provided on each side of the smoke barrier for the total number of occupants in adjoining compartments.

19.3.7.5* Doors in smoke barriers shall be substantial doors, such as 1¾ in. (44 mm) thick, solid-bonded wood core doors, or shall be of construction that resists fire for not less than 20 minutes, and shall meet the following requirements:

(1) Nonrated factory- or field-applied protective plates, unlimited in height, shall be permitted.
(2) Cross-corridor openings in smoke barriers shall be protected by a pair of swinging doors or a horizontal-sliding door complying with 11.2.1.14, unless otherwise permitted by 19.3.7.6.
(3) The swinging doors addressed by 19.3.7.5(2) shall be arranged so that each door swings in a direction opposite from the other.
(4) The minimum clear width for swinging doors shall be as follows:
    (a) Hospitals and nursing homes — 41½ in. (1055 mm)
    (b) Psychiatric hospitals and limited care facilities — 32 in. (810 mm)
(5) The minimum clear width opening for horizontal-sliding doors shall be as follows:
    (a) Hospitals and nursing homes — 6 ft 11 in. (2110 mm)
    (b) Psychiatric hospitals and limited care facilities — 64 in. (1625 mm)

19.3.7.6 Cross-corridor openings in smoke barriers that are not located in a required means of egress from a health care space shall be permitted to be protected by a single-leaf door.

19.3.7.7* Doors in smoke barriers shall meet the following criteria:

(1) They shall comply with 8.11.4 but shall be exempted from 8.11.4.1.
(2) They shall be self-closing or automatic-closing in accordance with 19.2.2.2.7.
(3) Clearance under the bottom of smoke barrier doors shall not exceed ¾ in. (19 mm).

19.3.7.8* Vision panels consisting of fire-rated glazing or wired glass panels in approved frames shall be provided in each cross-corridor swinging door and at each cross-corridor horizontal-sliding door in a smoke barrier.

19.3.7.9 Vision panels in doors in smoke barriers, if provided, shall be of fire-rated glazing or wired glass in approved frames.

19.3.7.10 Rabbets, bevels, or astragals shall be required at the meeting edges, and stops shall be required at the head and sides of door frames in smoke barriers. Positive latching hardware shall not be required. Center mullions shall be prohibited.

19.3.8* Special Protection Features — Outside Window or Door. Every patient sleeping room shall have an outside door or outside window with a sill height not exceeding 36 in. (915 mm) above the floor, unless otherwise permitted by the following:

(1) The requirement of 19.3.8 shall not apply to newborn nurseries and rooms intended for occupancy for less than 24 hours, such as those housing obstetrical labor beds, recovery beds, and observation beds in the emergency department.
(2) Windows in atrium walls shall be considered outside windows for the purposes of the requirement of 19.3.8.
(3) The window sill in special nursing care areas, such as those housing ICU, CCU, hemodialysis, and neonatal patients, shall not exceed 60 in. (1525 mm) above the floor.
(4) The window sill in limited care facilities shall not exceed 44 in. (1120 mm) above the floor.

19.4 Special Provisions.

19.4.1 Limited Access Structures. Limited access structures or windowless portions of structures shall not be used for patient

Copyright National Fire Protection Association
Provided by IHS under license with NFPA
No reproduction or networking permitted without license from IHS
Not for Resale

sleeping rooms. Windowless structures or windowless portions of structures shall comply with Chapter 31.

19.4.2 High-Rise Buildings. High-rise buildings shall comply with Chapter 33.

19.4.3 Nonsprinklered Existing Building Rehabilitation.

19.4.3.1* General. Where a modification in a nonsprinklered smoke compartment is exempted by the provisions of 15.5.1.3.5 from the sprinkler requirement of 19.1.1.4.3, the requirements of 19.4.3.2 through 19.4.3.7 shall apply.

19.4.3.2 Capacity of Means of Egress (Nonsprinklered Buildings). The capacity of the means of egress serving the modification area shall be as follows:

(1) 0.5 in. (13 mm) per person for horizontal travel, without stairs, by means such as doors, ramps, or level floor surfaces
(2) 0.6 in. (15 mm) per person for travel by means of stairs

19.4.3.3 Travel Distance (Nonsprinklered Buildings).

19.4.3.3.1 The travel distance for the means of egress serving the modification area shall comply with 19.4.3.3.2 and 19.4.3.3.3.

19.4.3.3.2 The travel distance between any room door required as an exit access and an exit shall not exceed 100 ft (30 m).

19.4.3.3.3 The travel distance between any point in a room and an exit shall not exceed 150 ft (46 m).

19.4.3.4* Hazardous Area Protection (Nonsprinklered Buildings). Where the modification involves creating a new hazardous area in an existing nonsprinklered smoke compartment, the hazardous area itself shall be protected with automatic sprinklers in accordance with Section 55.3 in addition to the protection required by Table 19.3.2.1.

19.4.3.5 Interior Finish (Nonsprinklered Buildings).

19.4.3.5.1 General. Interior finish within the modification area shall be in accordance with Chapter 10 and 19.4.3.5.2 through 19.4.3.5.3.

19.4.3.5.2 Interior Wall and Ceiling Finish. Newly installed Class A interior wall and ceiling finish materials in accordance with Chapter 10 shall be permitted throughout nonsprinklered smoke compartments, except as otherwise permitted in 19.4.3.5.2.1 or 19.4.3.5.2.2.

19.4.3.5.2.1 Walls and ceilings shall be permitted to have Class A or Class B interior finish in individual rooms having a capacity not exceeding four persons.

19.4.3.5.2.2 Corridor wall finish not exceeding 48 in. (1220 mm) in height that is restricted to the lower half of the wall shall be permitted to be Class A or Class B.

19.4.3.5.3 Interior Floor Finish. Newly installed interior floor finish in accordance with Section 10.6 in corridors and exits of nonsprinklered smoke compartments shall be Class I.

19.4.3.6 Corridors (Nonsprinklered Buildings).

19.4.3.6.1 Construction of Corridor Walls. Where the smoke compartment being modified is not protected throughout by an approved, electrically supervised automatic sprinkler system, corridor walls shall comply with the following:

(1) They shall have a fire resistance rating of not less than ½ hour.
(2) They shall be continuous from the floor to the underside of the floor or roof deck above.
(3) They shall resist the passage of smoke.

19.4.3.6.2 Corridor Doors. Where the smoke compartment being modified is not protected throughout by an approved, electrically supervised automatic sprinkler system, the following shall apply:

(1) Doors protecting corridor openings shall be constructed of 1¾ in. (44 mm) thick, solid-bonded core wood or of construction that resists the passage of fire for not less than 20 minutes.
(2) Door frames shall be labeled or of steel construction.
(3) Existing roller latches demonstrated to keep the door closed against a force of 5 lbf (22 N) shall be permitted.

19.4.3.7 Subdivision of Building Spaces (Nonsprinklered Buildings). The provision of 19.3.7.3.2 shall be permitted only where adjacent smoke compartments are protected throughout by an approved, electrically supervised automatic sprinkler system in accordance with 19.3.5.

19.5 Building Services.

19.5.1 Utilities.

19.5.1.1 Utilities shall comply with the provisions of Chapters 49, 52, and 53.

19.5.1.2 Power for alarms, emergency communications systems, and illumination of generator set locations shall be in accordance with the essential electrical system requirements of NFPA 99.

19.5.1.3 Any health care occupancy that normally uses life-support devices, other than for emergency purposes only, shall have electrical systems designed and installed in accordance with NFPA 99.

19.5.2 Heating, Ventilating, and Air-Conditioning.

19.5.2.1 Heating, ventilating, and air-conditioning shall comply with the provisions of Chapters 50 and 51 and shall be installed in accordance with the manufacturer's specifications, unless otherwise modified by 19.5.2.2.

19.5.2.2* Any heating device, other than a central heating plant, shall be designed and installed so that combustible material is not ignited by the device or its appurtenances and shall comply with 19.5.2.2.1 and 19.5.2.2.2.

19.5.2.2.1 If fuel-fired, heating devices shall be chimney connected or vent connected, shall take air for combustion directly from the outside, and shall be designed and installed to provide for complete separation of the combustion system from the atmosphere of the occupied area.

19.5.2.2.2 Any heating device shall have safety features to immediately stop the flow of fuel and shut down the equipment in case of either excessive temperatures or ignition failure.

19.5.2.2.3 Approved, suspended unit heaters shall be permitted in locations other than means of egress and patient sleeping areas, provided that such heaters are located high enough to be out of the reach of persons using the area and are equipped with the safety features required by 19.5.2.2.1 and 19.5.2.2.2.

Copyright National Fire Protection Association
Provided by IHS under license with NFPA
No reproduction or networking permitted without license from IHS
Not for Resale

19.5.2.2.4 Fireplaces shall be permitted and used only in areas other than patient sleeping areas, provided that such areas are separated from patient sleeping spaces by construction having not less than a 1-hour fire resistance rating, and provided that such fireplaces comply with the provisions of Chapter 50, 19.5.2.2.5, and 19.5.2.2.6.

19.5.2.2.5 In addition, the fireplace shall be equipped with a hearth raised not less than 4 in. (100 mm) and a fireplace enclosure guaranteed against breakage up to a temperature of 650°F (343°C) and constructed of heat-tempered glass or other approved material.

19.5.2.2.6 If, in the opinion of the authority having jurisdiction, special hazards are present, a lock on the enclosure and other safety precautions shall be permitted to be required.

19.5.3 Elevators, Escalators, and Conveyors. Elevators, escalators, and conveyors shall comply with the provisions of Chapter 54.

19.5.4 Rubbish Chutes, Incinerators, and Laundry Chutes.

19.5.4.1 Rubbish chutes, incinerators, and laundry chutes shall comply with the provisions of Section 8.17.

19.5.4.2 Any rubbish chute or linen chute, including pneumatic rubbish and linen systems, shall be provided with automatic extinguishing protection in accordance with Section 55.3. *(See Section 8.17.)*

19.5.4.3 Any trash chute shall discharge into a trash collection room used for no other purpose and protected in accordance with Section 8.15.

19.5.4.4 Incinerators shall not be directly flue-fed, nor shall any floor charging chute directly connect with the combustion chamber.

Chapter 20 Ambulatory Health Care Occupancies

20.1 General Requirements.

20.1.1 Application.

20.1.1.1* General.

20.1.1.1.1 The requirements of this chapter shall apply to new buildings or portions thereof used as an ambulatory health care occupancy.

20.1.1.1.2 Repairs, renovations, modifications, additions, and reconstruction of an ambulatory health care occupancy, and changes of use, including change of occupancy classification to an ambulatory health care occupancy, or correction of a damaged or unsafe portion of the building containing the ambulatory health care occupancy, shall comply with one of the following:

(1) Provisions of this chapter
(2) Provisions of Chapter 15

20.1.1.1.3 The requirements of Chapter 20, where referenced by Chapter 15, shall not apply to additions classified as occupancies other than ambulatory health care that are separated from the ambulatory health care occupancy in accordance with 20.1.2.2 and conform to the requirements for the specific occupancy in accordance with Chapters 16 through 19 and Chapters 21 through 30, as appropriate.

20.1.1.1.4 Ambulatory health care facilities shall comply with the provisions of Chapter 28 or this chapter, whichever are more stringent.

20.1.1.1.5 Buildings, or sections of buildings, that primarily house patients who, in the opinion of the governing body of the facility and the governmental agency having jurisdiction, are capable of judgment and appropriate physical action for self-preservation under emergency conditions shall be permitted to comply with chapters of this *Code* other than Chapter 20.

20.1.1.1.6 It shall be recognized that the requirements of this chapter are based on the assumption that staff is available in all patient-occupied areas to perform certain fire safety functions.

20.1.1.2 Changes of Occupancy. A change from a hospital or nursing home to an ambulatory health care occupancy shall not be considered a change in occupancy or occupancy subclassification.

20.1.2 Multiple Occupancies.

20.1.2.1 Multiple occupancies shall be in accordance with Section 6.2 and 20.1.2. Where there are differences in the specific requirements in this chapter and provisions for mixed occupancies or separated occupancies as specified in 6.2.3 and 6.2.4, the requirements of this chapter shall apply. *(See 4.3.2.3.)*

20.1.2.2* Sections of ambulatory health care facilities shall be permitted to be classified as other occupancies, provided that they meet both of the following conditions:

(1) They are not intended to serve ambulatory health care occupants for purposes of treatment or customary access by patients incapable of self-preservation.
(2) They are separated from areas of ambulatory health care occupancies by construction having a fire resistance rating of not less than 1 hour.

20.1.2.3 All means of egress from ambulatory health care occupancies that traverse nonambulatory health care spaces shall conform to requirements of this *Code* for ambulatory health care occupancies.

20.1.2.4 Egress through a horizontal exit into other contiguous occupancies that do not conform with ambulatory health care egress provisions, but that do comply with requirements set forth in the appropriate occupancy chapter of this *Code*, shall be permitted, provided that the occupancy does not contain high hazard contents exceeding the maximum allowable quantities per control area as set forth in 34.1.3, other than Level 4 hazardous areas.

20.1.2.5 Egress provisions for areas of ambulatory health care facilities that correspond to other occupancies shall meet the corresponding requirements of this *Code* for such occupancies. Where the clinical needs of the occupant necessitate the locking of means of egress, staff shall be present for the supervised release of occupants during all times of use.

20.1.2.6 Any area with a hazard of contents classified higher than that of the ambulatory health care occupancy and located in the same building shall be protected as required in 20.3.2.

20.1.2.7 Non-health care–related occupancies classified as containing high hazard contents exceeding the maximum allowable quantities per control area as set forth in 34.1.3 shall not be permitted in buildings housing ambulatory health care occupancies.

Copyright National Fire Protection Association
Provided by IHS under license with NFPA
No reproduction or networking permitted without license from IHS
Not for Resale

20.1.3 Classification of Occupancy. Classification of occupancy shall be in accordance with 6.1.6.

20.1.4 Classification of Hazard of Contents.

20.1.4.1 Hazard of contents shall be classified in accordance with 6.3.2.

20.1.4.2 Buildings or areas in which high hazard contents are stored, used, or handled shall comply with Chapter 34.

20.1.5 Reserved.

20.1.6 Minimum Construction Requirements.

20.1.6.1 Construction shall be in accordance with all of the following, except as modified by 20.1.6.2 and 20.1.6.3:

(1) Chapter 7, Construction Types and Height and Area Requirements
(2) Chapter 8, Fire-Resistive Materials and Construction
(3) Chapter 13, Encroachments into the Public Right-of-Way
(4) Chapter 14, Safeguards During Construction
(5) Chapter 31, Occupancies in Special Structures
(6) Chapter 35, Structural Design
(7) Chapter 36, Soils, Foundations, and Retaining Walls
(8) Chapter 37, Exterior Wall Construction
(9) Chapter 38, Roof Assemblies and Roof Structures
(10) Chapter 39, Flood-Resistant Design and Construction
(11) Chapter 40, Quality Assurance During Construction

20.1.6.2 A single level below the level of exit discharge shall be permitted, provided that it complies with one of the following:

(1) The level is separated from the level of exit discharge by not less than Type II(111), Type III(211), or Type V(111) construction.
(2) The level is under the control of the ambulatory health care facility, and any hazardous areas on the level are protected in accordance with Chapter 34.

20.1.6.3 Buildings with more than one level below the level of exit discharge shall have all such lower levels separated from the level of exit discharge by not less than Type II(111) construction.

20.1.7 Occupant Load. The occupant load shall be in accordance with 28.1.6.

20.1.8 Accessibility. Accessibility shall be in accordance with Chapter 12.

20.2 Means of Egress Requirements.

20.2.1 General. Every aisle, passageway, corridor, exit discharge, exit location, and access shall be in accordance with Chapter 11, unless otherwise modified by 20.2.2 through 20.2.11.

20.2.2 Means of Egress Components.

20.2.2.1 General. Components of means of egress shall be limited to the types described in 28.2.2.

20.2.2.2 Doors.

20.2.2.2.1 Delayed-egress locks complying with 11.2.1.6.1 shall be permitted, provided that not more than one device is located in any egress paths.

20.2.2.2.2 Access-controlled egress doors complying with 11.2.1.6.2 shall be permitted.

20.2.2.2.3 Door-locking arrangements shall be permitted where the clinical needs of the patients require specialized security measures for their safety, provided that keys are carried by staff at all times.

20.2.2.2.4 Any door required to be self-closing shall be permitted to be held open only by an automatic release device that complies with 11.2.1.8.2. The required manual fire alarm system and the systems required by 11.2.1.8.2 shall be arranged to initiate the closing action of all such doors throughout the smoke compartment or throughout the entire facility.

20.2.2.2.5 Where doors in a stair enclosure are held open by an automatic release device as permitted in 20.2.2.2.4, initiation of a door-closing action on any level shall cause all doors at all levels in the stair enclosure to close.

20.2.3 Capacity of Means of Egress.

20.2.3.1 The capacity of any required means of egress shall be determined in accordance with the provisions of 28.2.3 and Section 11.3.

20.2.3.2 The clear width of any corridor or passageway required for exit access shall be not less than 44 in. (1120 mm).

20.2.3.3 Where minimum corridor width is 6 ft (1830 mm), projections of maximum 6 in. (150 mm) from the corridor wall, above the handrail height, shall be permitted for the installation of hand-rub dispensing units in accordance with 20.3.2.4.

20.2.3.4 Doors in the means of egress from diagnostic or treatment areas, such as x-ray, surgical, or physical therapy, shall provide a clear width of not less than 32 in. (810 mm).

20.2.4 Number of Exits.

20.2.4.1 Not less than two exits of the types described in 28.2.2 that are remotely located from each other shall be provided for each floor or fire section of the building.

20.2.4.2 Any room, or any suite of rooms, of more than 2500 ft^2 (232 m^2) shall have not less than two exit access doors remotely located from each other.

20.2.4.3 Not less than two exits of the types described in 28.2.2 shall be accessible from each smoke compartment. Egress shall be permitted through adjacent compartments but shall not require return through the compartment of fire origin.

20.2.5 Arrangement of Means of Egress. Arrangement of means of egress shall be in accordance with 28.2.5.

20.2.6 Travel Distance to Exits.

20.2.6.1 Travel distance shall be measured in accordance with Section 11.6.

20.2.6.2 Travel distance shall be as follows:

(1) The travel distance between any room door required as an exit access and an exit shall not exceed 100 ft (30 m).
(2) The travel distance between any point in a room and an exit shall not exceed 150 ft (46 m).
(3) The maximum travel distance in 20.2.6.2(1) or (2) shall be permitted to be increased by 50 ft (15 m) in buildings protected throughout by an approved, electrically supervised automatic sprinkler system in accordance with Section 55.3.

20.2.7 Discharge from Exits. Discharge from exits shall be in accordance with 28.2.7.

Copyright National Fire Protection Association
Provided by IHS under license with NFPA
No reproduction or networking permitted without license from IHS
Not for Resale

20.2.8 Illumination of Means of Egress. Means of egress shall be illuminated in accordance with Section 11.8.

20.2.9 Emergency Lighting and Essential Electrical Systems.

20.2.9.1 Emergency lighting shall be provided in accordance with Section 11.9.

20.2.9.2 Where general anesthesia or life-support equipment is used, each ambulatory health care facility shall be provided with an essential electrical system in accordance with NFPA 99, *Standard for Health Care Facilities*, unless one of the following conditions exists:

(1) Where battery-operated equipment is provided and is acceptable to the authority having jurisdiction
(2) Where the facility uses life-support equipment for emergency purposes only

20.2.10 Marking of Means of Egress. Means of egress shall have signs in accordance with Section 11.10.

20.2.11 Special Means of Egress Features.

20.2.11.1 Reserved.

20.2.11.2 Lockups. Lockups in ambulatory health care occupancies shall comply with the requirements of 21.4.5.

20.3 Protection.

20.3.1 Protection of Vertical Openings. Protection of vertical openings shall be in accordance with 28.3.1.

20.3.2 Hazardous Area Protection. Hazardous area protection shall be in accordance with 28.3.2.

20.3.2.1 Laboratories. Laboratories employing quantities of flammable, combustible, or hazardous materials that are considered as a severe hazard shall be protected in accordance with NFPA 99.

20.3.2.2 Anesthetizing Locations. Anesthetizing locations shall be protected in accordance with NFPA 99.

20.3.2.3 Commercial Cooking Facilities.

20.3.2.3.1 Commercial cooking facilities shall be protected in accordance with Section 55.10.

20.3.2.3.2* Where domestic cooking equipment is used for food warming or limited cooking, protection or separation of food preparation facilities shall not be required.

20.3.2.4* Alcohol-Based Hand-Rub Dispensers. Alcohol-based hand-rub dispensers shall be protected in accordance with Section 8.15 and Chapter 34, unless all of the following criteria are met:

(1) Where dispensers are installed in a corridor, the corridor shall have a width of not less than 6 ft (1830 mm).
(2) The maximum individual dispenser fluid capacity shall be as follows:
   (a) 0.32 gal (1.2 L) for dispensers in rooms, corridors, and areas open to corridors
   (b) 0.53 gal (2.0 L) for dispensers in suites of rooms
(3) The dispensers shall have horizontal spacing of not less than 48 in. (1220 mm) from each other.
(4) Not more than an aggregate 10 gal (37.8 L) of alcohol-based hand rub solution shall be in use in a single smoke compartment outside of a storage cabinet.
(5) Storage of quantities greater than 5 gal (18.9 L) in a single smoke compartment shall meet the requirements of NFPA 30, *Flammable and Combustible Liquids Code*.
(6) The dispensers shall not be installed over, or directly adjacent to, an ignition source.
(7) In locations with carpeted floors, dispensers installed directly over carpeted surfaces shall be permitted only in sprinklered smoke compartments.

20.3.3 Interior Finish.

20.3.3.1 General. Interior finish shall be in accordance with Chapter 10.

20.3.3.2 Interior Wall and Ceiling Finish. Interior wall and ceiling finish materials in accordance with Chapter 10 shall be Class A or Class B in exits and in enclosed corridors furnishing access to exits; and Class A, Class B, or Class C in office areas.

20.3.3.3 Interior Floor Finish.

20.3.3.3.1 Interior floor finish shall comply with Section 10.6.

20.3.3.3.2 Interior floor finish in exit enclosures and corridors shall be Class I or Class II.

20.3.3.3.3 Interior floor finish shall comply with 10.6.1 or 10.6.2, as applicable.

20.3.4 Detection, Alarm, and Communications Systems.

20.3.4.1 General. Ambulatory health care facilities shall be provided with fire alarm systems in accordance with Section 55.2, except as modified by 20.3.4.2 through 20.3.4.4.

20.3.4.2 Initiation. Initiation of the required fire alarm systems shall be by manual means in accordance with 55.2.2 and by means of any detection devices or detection systems required.

20.3.4.3 Notification. Positive alarm sequence in accordance with 55.2.3.4 shall be permitted.

20.3.4.3.1 Occupant Notification. Occupant notification shall be accomplished automatically, without delay, in accordance with 55.2.3 upon operation of any fire alarm initiating device.

20.3.4.3.2 Emergency Forces Notification. Fire department notification shall be accomplished in accordance with 55.2.4.

20.3.4.4 Emergency Control. Operation of any activating device in the required fire alarm system shall be arranged to accomplish automatically any control functions required to be performed by that device. *(See 55.2.5.)*

20.3.5 Extinguishment Requirements. Extinguishment requirements shall be in accordance with 20.3.5.1, 20.3.5.2, and 28.3.5.

20.3.5.1 Automatic Sprinklers. Buildings two or more stories in height of Type II (000), Type III(200), or Type V(000) construction shall be protected throughout by an approved, electrically supervised automatic sprinkler system in accordance with Section 55.3.

20.3.5.2 Where another provision of this chapter requires an automatic sprinkler system to be electrically supervised, the sprinkler system shall be electrically supervised in accordance with 55.3.2.

20.3.5.3 Isolated hazardous areas shall be permitted to be protected in accordance with 55.3.1.2. Where more than two sprinklers are installed in a single area, waterflow detection

Copyright National Fire Protection Association
Provided by IHS under license with NFPA
No reproduction or networking permitted without license from IHS
Not for Resale

shall be provided to sound the building fire alarm, or to notify by a signal, any constantly attended location, such as PBX, security, or emergency room, at which the necessary corrective action shall be taken.

20.3.5.4 Class I standpipe systems shall be provided where required by 55.4.1.

20.3.5.5 Portable fire extinguishers shall be provided in ambulatory health care facilities in accordance with Section 55.6.

20.3.6 Exit Access Corridors.

20.3.6.1* General. Corridors used for exit access within the ambulatory health care occupancy shall comply with the following:

(1) They shall be smoke partitions in accordance with Section 8.10.
(2) They shall have not less than a 1-hour fire resistance rating in accordance with Section 8.4 in other than smoke compartments protected throughout by an approved, electrically supervised automatic sprinkler system in accordance with Section 55.3.

20.3.6.2 Doors. In smoke compartments protected throughout by an approved, electrically supervised automatic sprinkler system in accordance with Section 55.3, corridor doors, other than fire protection–rated doors serving hazardous areas; exit enclosures; or vertical openings, shall meet the following:

(1) They shall be self-latching.
(2) They shall comply with 8.10.3.1 through 8.10.3.4.
(3) They shall be self-closing or automatic-closing in accordance with 8.10.3.5 where the non-rated door serves a sprinklered hazardous area.

20.3.6.3 Openings.

20.3.6.3.1 Miscellaneous openings, such as mail slots, pharmacy pass-through windows, laboratory pass-through windows, and cashier pass-through windows, shall be permitted to be installed in vision panels or doors without special protection, provided that the aggregate area of openings per room does not exceed 20 in.^{2} (0.015 m^2) and the openings are installed at or below one-half the distance from the floor to the room ceiling.

20.3.6.3.2 For rooms protected throughout by an approved, electrically supervised automatic sprinkler system in accordance with Section 55.3, the aggregate area of openings per room specified in 20.3.6.3.1 shall not exceed 80 in.^{2} (0.05 m^2).

20.3.7 Subdivision of Building Spaces.

20.3.7.1 Ambulatory health care facilities shall be separated from other tenants and occupancies by walls having not less than a 1-hour fire resistance rating. Such walls shall extend from the floor slab below to the floor or roof slab above. Doors shall have a 20-minute fire protection rating. Any windows in these barriers shall be of fixed fire window assemblies in accordance with 8.7.5.

20.3.7.2 Every story of the ambulatory health care facility shall be divided into not less than two smoke compartments, unless one of the following conditions exists:

(1) Facilities are less than 5000 ft^2 (465 m^2) and are protected by an approved automatic smoke detection system.
(2) Facilities are less than 10,000 ft^2 (929 m^2) and are protected throughout by an approved, electrically supervised automatic sprinkler system installed in accordance with Section 55.3.
(3) An area in an adjoining occupancy is permitted to serve as a smoke compartment for the ambulatory health care facility, and the following criteria also are met:
   (a) The separating wall and both compartments meet the requirements of 20.3.7.
   (b) The ambulatory health care facility is less than 22,500 ft^2 (2100 m^2).
   (c) Access from the ambulatory health care facility to the other occupancy is unrestricted.

20.3.7.3 Smoke compartments, other than the area of an atrium separated in accordance with 8.12.3, shall not exceed an area of 22,500 ft^2 (2100 m^2), and the travel distance from any point to reach a door in a smoke barrier shall not exceed 200 ft (61 m).

20.3.7.4 Any required smoke barrier shall be constructed in accordance with Section 8.11.

20.3.7.4.1 Any required smoke barrier shall have a fire resistance rating of not less than 1 hour.

20.3.7.4.2 Smoke dampers shall not be required in duct penetrations of smoke barriers in fully ducted heating, ventilating, and air-conditioning systems for buildings protected throughout by an approved, electrically supervised automatic sprinkler system in accordance with Section 55.3.

20.3.7.5 Windows in the smoke barrier shall be of fixed fire window assemblies in accordance with 8.7.5.

20.3.7.6 Not less than 15 net ft^2 (1.4 net m^2) per ambulatory health care facility occupant shall be provided within the aggregate area of corridors, patient rooms, treatment rooms, lounges, and other common areas on each side of the smoke compartment for the total number of occupants in adjoining compartments.

20.3.7.7* Doors in smoke barriers shall comply with the following:

(1) They shall be not less than 1¾ in. (44 mm) thick, solid-bonded wood core or the equivalent.
(2) They shall be self-closing or automatic-closing in accordance with 20.2.2.2.4.
(3) They shall be provided with positive latching hardware on other than cross-corridor doors.
(4) They shall be provided with a vision panel of fire-rated glazing or wired glass panels in approved frames if the door is a cross-corridor door.

20.3.7.8 Rabbets, bevels, or astragals shall be required at the meeting edges, and stops shall be required at the head and sides of door frames in smoke barriers.

20.4 Special Provisions.

20.4.1 The provisions of Section 28.4 shall apply.

20.4.2 Limited access or underground structures shall comply with Chapter 31.

20.5 Building Services.

20.5.1 Utilities. Utilities shall comply with the provisions of Chapters 49, 52, and 53.

20.5.2 Heating, Ventilating, and Air-Conditioning.

20.5.2.1 Heating, ventilating, and air-conditioning shall comply with the provisions of Chapters 50 and 51 and shall be in

--`,,```,,,,````-`-`,,`,,`,`,,`---

Copyright National Fire Protection Association
Provided by IHS under license with NFPA
No reproduction or networking permitted without license from IHS
Not for Resale

accordance with the manufacturer's specifications, unless otherwise modified by 20.5.2.2.

20.5.2.2 Any heating device, other than a central heating plant, shall be designed and installed so that combustible material will not be ignited by the device or its appurtenances and shall comply with 20.5.2.2.1 and 20.5.2.2.2.

20.5.2.2.1 If fuel-fired, heating devices shall be chimney connected or vent connected, shall take air for combustion directly from the outside, and shall be designed and installed to provide for complete separation of the combustion system from the atmosphere of the occupied area.

20.5.2.2.2 Any heating device shall have safety features to immediately stop the flow of fuel and shut down the equipment in case of either excessive temperature or ignition failure.

20.5.2.2.3 Approved, suspended unit heaters shall be permitted in locations other than means of egress and patient treatment areas, provided that such heaters are located high enough to be out of the reach of persons using the area and are equipped with the safety features required by 20.5.2.2.1 and 20.5.2.2.2.

20.5.3 Elevators, Escalators, and Conveyors. Elevators, escalators, and conveyors shall comply with the provisions of Chapter 54.

20.5.4 Rubbish Chutes, Incinerators, and Laundry Chutes. Rubbish chutes, incinerators, and laundry chutes shall comply with the provisions of Section 8.17.

Chapter 21 Detention and Correctional Occupancies

21.1 General Requirements.

21.1.1 Application.

21.1.1.1 The requirements of this chapter shall apply to new buildings or portions thereof used as a detention and correctional occupancy, unless otherwise permitted by the following:

(1) The requirements of this chapter shall not apply to Use Condition I facilities protected as residential occupancies in accordance with 21.1.3.3.
(2) The requirements of this chapter shall not apply to facilities where the authority having jurisdiction has determined equivalent safety has been provided in accordance with Section 1.5.

21.1.1.2 Repairs, renovations, modifications, additions, and reconstruction of a detention and correctional occupancy, and changes of use, including change of occupancy classification to a detention and correctional occupancy, or correction of a damaged or unsafe portion of the building containing the detention and correctional occupancy, shall comply with one of the following:

(1) Provisions of this chapter
(2) Provisions of Chapter 15

21.1.1.2.1 The requirements of this chapter, where referenced by Chapter 15, shall not apply to Use Condition I facilities protected as residential occupancies in accordance with 21.1.3.3.

21.1.1.2.2 The requirements of 21.1.1.2 shall not apply to facilities where the authority having jurisdiction has determined equivalent safety has been provided in accordance with Section 1.5.

21.1.1.3 Detention and correctional occupancies shall be those used for purposes such as correctional institutions, detention facilities, community residential centers, training schools, work camps, and substance abuse centers where occupants are confined or housed under some degree of restraint or security.

21.1.1.4* Detention and correctional occupancies shall include those occupancies that provide sleeping facilities for one or more residents and are occupied by persons who are generally prevented from taking self-preservation action because of security measures not under the occupants' control.

21.1.1.5 All detention and correctional facilities shall be designed, constructed, maintained, and operated to minimize the possibility of a fire emergency. Because the safety of all occupants in detention and correctional facilities cannot be adequately ensured solely by dependence on evacuation of the building, their protection from fire shall be provided by appropriate arrangement of facilities; adequate, trained staff; and development of operating, security, and maintenance procedures composed of the following:

(1) Design, construction, and compartmentation
(2) Provision for detection, alarm, and extinguishment
(3) Fire prevention; and planning, training, and drilling in programs for the isolation of fire, transfer of occupants to areas of refuge, evacuation of the building, or protection of occupants in place
(4) Provision of security to the degree necessary for the safety of the public and the occupants of the facility

21.1.1.6* Lockups, in other than detention and correctional occupancies and health care occupancies, shall comply with the requirements of 21.4.5.

21.1.2* Multiple Occupancies.

21.1.2.1 Multiple occupancies shall be in accordance with Section 6.2 and 21.1.2. Where there are differences in the specific requirements in this chapter and provisions for mixed occupancies or separated occupancies as specified in 6.2.3 and 6.2.4, the requirements of this chapter shall apply. *(See 4.3.2.3.)*

21.1.2.2 Egress provisions for areas of detention and correctional facilities that correspond to other occupancies shall meet the corresponding requirements of this *Code* for such occupancies, as modified by 21.1.2.2.1 and 21.1.2.2.2.

21.1.2.2.1 Where security operations necessitate the locking of required means of egress, staff in the building shall be provided with the means for the supervised release of occupants during all times of use.

21.1.2.2.2* Where security operations necessitate the locking of required means of egress, detention-grade hardware meeting ASTM F 1577, *Standard Test Method for Detention Locks for Swinging Doors*, shall be provided on swinging doors within the required means of egress. Sliding doors within the required means of egress shall be designed and engineered for detention and correctional use, and lock cylinders shall meet the cylinder test requirements of ASTM F 1577.

21.1.2.3 Sections of detention and correctional facilities shall be permitted to be classified as other occupancies, provided that they meet both of the following conditions:

Copyright National Fire Protection Association
Provided by IHS under license with NFPA
No reproduction or networking permitted without license from IHS
Not for Resale

(1) They are not intended to serve residents for sleeping purposes.
(2) They are separated from areas of detention or correctional occupancies by construction having a minimum 2-hour fire resistance rating.

21.1.2.4 All means of egress from detention and correctional occupancies that traverse other use areas shall, as a minimum, conform to the requirements of this *Code* for detention and correctional occupancies.

21.1.2.4.1 Egress through a horizontal exit into other contiguous occupancies that do not conform to detention and correctional occupancy egress provisions, but that do comply with requirements set forth in the appropriate occupancy chapter of this *Code*, shall be permitted, provided that the occupancy does not contain high hazard contents exceeding the maximum allowable quantities per control area as set forth in 34.1.3.

21.1.2.4.2 The horizontal exit specified in 21.1.2.4.1 shall comply with the requirements of 21.2.2.5.

21.1.2.5 Any area with a hazard of contents classified higher than that of the detention or correctional occupancy and located in the same building shall be protected as required in 21.3.2.

21.1.2.6 Nondetention- or noncorrectional-related occupancies classified as containing high hazard contents exceeding the maximum allowable quantities per control area as set forth in 34.1.3 shall not be permitted in buildings housing detention or correctional occupancies.

21.1.3 Classification of Occupancy.

21.1.3.1* For application of the safety requirements that follow, the resident use condition is divided into five groups and shall be as specified in 21.1.3.1.1 through 21.1.3.1.5.

21.1.3.1.1 Use Condition I — Free Egress. Use Condition I shall be that use condition for which free movement is allowed from sleeping areas and other spaces where access or occupancy is permitted to the exterior via means of egress that meet the requirements of this *Code*.

21.1.3.1.2 Use Condition II — Zoned Egress. Use Condition II shall be that use condition for which free movement is allowed from sleeping areas and any other occupied smoke compartment to one or more other smoke compartments.

21.1.3.1.3 Use Condition III — Zoned Impeded Egress. Use Condition III shall be that use condition for which free movement is allowed within individual smoke compartments, such as within a residential unit comprised of individual sleeping rooms and group activity space, with egress impeded by remote-controlled release of means of egress from such smoke compartment to another smoke compartment.

21.1.3.1.4 Use Condition IV — Impeded Egress. Use Condition IV shall be that use condition for which free movement is restricted from an occupied space, and for which remote-controlled release is provided to allow movement from all sleeping rooms, activity spaces, and other occupied areas within the smoke compartment to another smoke compartment.

21.1.3.1.5 Use Condition V — Contained. Use Condition V is that use condition for which free movement is restricted from an occupied space, and for which staff-controlled manual release at each door is provided to allow movement from all sleeping rooms, activity spaces, and other occupied areas within the smoke compartment to another smoke compartment.

21.1.3.2* To classify as Use Condition III or Use Condition IV, the arrangement, accessibility, and security of the release mechanism(s) used for emergency egress shall be such that the minimum available staff, at any time, can promptly release the locks.

21.1.3.3 Areas housing occupancies corresponding to Use Condition I shall conform to one of the following:

(1) Requirements of residential occupancies under this *Code*
(2)*Requirements of this chapter for Use Condition II facilities

21.1.4 Classification of Hazard Contents.

21.1.4.1 Hazard of contents shall be classified in accordance with 6.3.2.

21.1.4.2 Buildings or areas in which high hazard contents are stored, used, or handled shall comply with Chapter 34.

21.1.5 Reserved.

21.1.6 Minimum Construction Requirements.

21.1.6.1 Construction shall be in accordance with all of the following:

(1) Chapter 7, Construction Types and Height and Area Requirements
(2) Chapter 8, Fire-Resistive Materials and Construction
(3) Chapter 13, Encroachments into the Public Right-of-Way
(4) Chapter 14, Safeguards During Construction
(5) Chapter 31, Occupancies in Special Structures
(6) Chapter 35, Structural Design
(7) Chapter 36, Soils, Foundations, and Retaining Walls
(8) Chapter 37, Exterior Wall Construction
(9) Chapter 38, Roof Assemblies and Roof Structures
(10) Chapter 39, Flood-Resistant Design and Construction
(11) Chapter 40, Quality Assurance During Construction

21.1.6.2 Detention and correctional occupancy residential housing units shall not be located more than one level below the level of exit discharge.

21.1.7 Occupant Load. The occupant load, in number of persons for whom means of egress and other provisions are required, shall be determined on the basis of the occupant load factors of Table 11.3.1.2 that are characteristic of the use of the space, or shall be determined as the maximum probable population of the space under consideration, whichever is greater.

21.1.8 Accessibility. Accessibility shall be in accordance with Chapter 12.

21.2 Means of Egress Requirements.

21.2.1 General. Means of egress shall comply with Chapter 11, unless otherwise provided or modified by Section 21.2.

21.2.2 Means of Egress Components.

21.2.2.1 General. Components of means of egress shall be limited to the types described in 21.2.2.2 through 21.2.2.10.

21.2.2.2 Doors. Doors complying with 11.2.1 shall be permitted, unless otherwise provided by 21.2.11.

Copyright National Fire Protection Association
Provided by IHS under license with NFPA
No reproduction or networking permitted without license from IHS
Not for Resale

21.2.2.3 Stairs.

21.2.2.3.1 Stairs shall comply with the following:

(1) Stairs complying with 11.2.2 shall be permitted.
(2) Noncombustible grated stair treads and landing floors shall be permitted.

21.2.2.3.2 Spiral stairs complying with 11.2.2.2.3 shall be permitted for access to and between staff locations.

21.2.2.4 Smokeproof Enclosures. Smokeproof enclosures complying with 11.2.3 shall be permitted.

21.2.2.5 Horizontal Exits. Horizontal exits complying with 11.2.4 and the modifications of 21.2.2.5.1 through 21.2.2.5.3 shall be permitted.

21.2.2.5.1 At least 6 ft^2 (0.56 m^2) of accessible space per occupant shall be provided on each side of the horizontal exit for the total number of people in adjoining compartments.

21.2.2.5.2 Horizontal exits shall be permitted to comprise 100 percent of the exits required, provided that an exit, other than a horizontal exit, is accessible in some other (not necessarily adjacent) fire compartment without requiring return through the compartment of fire origin.

21.2.2.5.3 Ducts shall be permitted to penetrate horizontal exits in accordance with 11.2.4.3.4(2) if protected by combination fire dampers/smoke leakage–rated dampers that meet the smoke damper actuation requirements of 8.11.6.7.

21.2.2.6 Ramps. Ramps complying with 11.2.5 shall be permitted.

21.2.2.7 Exit Passageways. Exit passageways complying with 11.2.6 shall be permitted.

21.2.2.8 Fire Escape Ladders. Fire escape ladders complying with 11.2.9 shall be permitted.

21.2.2.9 Alternating Tread Devices. Alternating tread devices complying with 11.2.11 shall be permitted.

21.2.2.10 Areas of Refuge. Areas of refuge complying with 11.2.12 shall be permitted.

21.2.3 Capacity of Means of Egress.

21.2.3.1 The capacity of any required means of egress shall be in accordance with Section 11.3.

21.2.3.2 Aisles, corridors, and ramps required for egress shall be a minimum of 48 in. (1220 mm) in width.

21.2.3.3 Residents' sleeping room door widths shall comply with 21.2.11.4.

21.2.4 Number of Exits. The number of exits shall be in accordance with 21.2.4.1 and 21.2.4.2 and Section 11.4.

21.2.4.1 A minimum of two separate exits shall meet the following conditions:

(1) They shall be provided on every story.
(2) They shall be accessible from every part of every story, fire compartment, or smoke compartment, but exit access travel shall be permitted to be common for the distances permitted as common path of travel by 21.2.5.3.

21.2.4.2* A minimum of one approved exit shall be accessible from each fire compartment and each required smoke compartment into which residents are potentially moved in a fire emergency, with the exits arranged so that egress shall not require return through the zone of fire origin.

21.2.5 Arrangement of Means of Egress. Arrangement of means of egress shall be in accordance with 21.2.5.1 through 21.2.5.4 and Section 11.5.

21.2.5.1 Every sleeping room shall have a door leading directly to an exit access corridor.

21.2.5.1.1 The requirement of 21.2.5.1 shall not apply where an exit door opens directly to the outside from the room at the ground level.

21.2.5.1.2 One adjacent room, such as a day room, group activity space, or other common space shall be permitted to intervene. Where sleeping rooms directly adjoin a day room or group activity space that is utilized for access to an exit, such sleeping rooms shall be permitted to open directly to the day room or space and shall be permitted to be separated in elevation by a one-half story or full-story height.

21.2.5.2 No exit or exit access shall contain a corridor, hallway, or aisle having a pocket or dead end exceeding 50 ft (15 m) for Use Condition II, Use Condition III, or Use Condition IV and exceeding 20 ft (6100 mm) for Use Condition V.

21.2.5.3 No common path of travel shall exceed 100 ft (30 m).

21.2.5.4 A sally port shall be permitted in a means of egress where there are provisions for continuous and unobstructed travel through the sally port during an emergency egress condition.

21.2.6 Travel Distance to Exits. Travel distance shall comply with 21.2.6.1 through 21.2.6.3.

21.2.6.1 The travel distance between any room door required as an exit access and an exit shall not exceed 150 ft (46 m).

21.2.6.2 The travel distance between any point in a room and an exit shall not exceed 200 ft (61 m).

21.2.6.3 The travel distance between any point in a sleeping room to the door in that room shall not exceed 50 ft (15 m).

21.2.6.3.1 The maximum permitted travel distance specified in 21.2.6.3 shall be increased to 100 ft (30 m) in open dormitories where the enclosing walls of the dormitory space are of smoke-tight construction.

21.2.6.3.2 Where travel distance to the exit access door from any point within the dormitory exceeds 50 ft (15 m) as permitted by 21.2.6.3.1, a minimum of two exit access doors remotely located from each other shall be provided.

21.2.7 Discharge from Exits.

21.2.7.1 Exits shall be permitted to discharge into a fenced or walled courtyard, provided that not more than two walls of the courtyard are the building walls from which egress is being made. Enclosed yards or courts shall be of sufficient size to accommodate all occupants at a minimum distance of 50 ft (15 m) from the building while providing a net area of 15 ft^2 (1.4 m^2) per person.

21.2.7.2 All exits shall be permitted to discharge through the level of exit discharge. The requirements of 11.7.2 shall be waived, provided that not more than 50 percent of the exits discharge into a single fire compartment separated from other compartments by construction having a minimum 1-hour fire resistance rating.

Copyright National Fire Protection Association
Provided by IHS under license with NFPA
No reproduction or networking permitted without license from IHS
Not for Resale

21.2.8 Illumination of Means of Egress. Illumination shall be provided in accordance with Section 11.8.

21.2.9 Emergency Lighting. Emergency lighting shall be provided in accordance with Section 11.9.

21.2.10 Marking of Means of Egress.

21.2.10.1 Exit marking shall be provided in areas accessible to the public in accordance with Section 11.10.

21.2.10.2 Exit signs shall not be required in residential housing areas.

21.2.11 Special Features.

21.2.11.1 Doors within means of egress shall be as required in Chapter 11, unless otherwise provided in 21.2.11.2 through 21.2.11.12.

21.2.11.2 Where security operations necessitate the locking of required means of egress, detention-grade hardware meeting the criteria of ASTM F 1577, *Standard Test Method for Detention Locks for Swinging Doors,* shall be provided on swinging doors within the required means of egress. Sliding doors within the required means of egress shall be designed and engineered for detention and correctional use, and lock cylinders shall meet the cylinder test requirements of ASTM F 1577.

21.2.11.3 Doors shall be permitted to be locked in accordance with the applicable use condition.

21.2.11.4* Doors to resident sleeping rooms shall be a minimum of 28 in. (710 mm) in clear width.

21.2.11.5 Doors in a means of egress shall be permitted to be of the horizontal-sliding type, provided that the force to slide the door to its fully open position does not exceed 50 lbf (222 N) where a force of 50 lbf (222 N) is simultaneously applied perpendicular to the door.

21.2.11.6 Doors from areas of refuge to the exterior shall be permitted to be locked with key locks in lieu of the locking methods described in 21.2.11.7. The keys to unlock such doors shall be maintained and available at the facility at all times, and the locks shall be operable from the outside.

21.2.11.7* Any remote-control release used in a means of egress shall be provided with a reliable means of operation, remotely located from the resident living areas, to release locks on all doors. The remote location shall have sight and sound supervision of the resident living areas.

21.2.11.7.1 Provisions for remote-control locking and unlocking of occupied rooms in Use Condition IV shall not be required, provided that not more than 10 locks need to be unlocked to move all occupants from one smoke compartment to an area of refuge as promptly as required to relocate occupants when remote-control unlocking is used.

21.2.11.7.2 Unlocking of all locks, as specified in 21.2.11.7.1, shall be accomplished with not more than two separate keys. *(See 21.3.7.7 for requirements for smoke barrier doors.)*

21.2.11.8 All remote-control release–operated doors shall be provided with a redundant means of operation as follows:

(1) Power-operated sliding doors or power-operated locks shall be constructed so that, in the event of power failure, a manual mechanical means to release and open the doors is provided at each door, and either emergency power arranged in accordance with 11.9.2.3 is provided for the power operation or a remote-control manual mechanical release is provided.
(2) Mechanically operated sliding doors or mechanically operated locks shall be provided with a manual mechanical means at each door to release and open the door.

21.2.11.9 The provision of 11.2.1.5.8 for stairway re-entry shall not apply.

21.2.11.10 Doors unlocked by means of remote control under emergency conditions shall not automatically relock when closed, unless specific action is taken at the remote-control location to enable doors to relock.

21.2.11.11 Emergency power shall be provided for all electric power–operated sliding doors and electric power–operated locks. Power shall be arranged to automatically operate within 10 seconds upon failure of normal power and to maintain the necessary power source for a minimum of 1½ hours.

21.2.11.12 The provisions of 21.2.11.11 shall not apply to facilities with 10 or fewer locks complying with 21.2.11.7.1 and 21.2.11.7.2.

21.3 Protection.

21.3.1 Protection of Vertical Openings. Any vertical opening shall be enclosed or protected in accordance with Section 8.12, unless otherwise permitted by the following:

(1) Unprotected vertical openings in accordance with 8.12.4.2 shall be permitted.
(2)* In residential housing area smoke compartments protected throughout by an approved automatic sprinkler system, unprotected vertical openings shall be permitted in accordance with the conditions of 8.12.2, provided that the height between the lowest and highest finished floor levels does not exceed 23 ft (7010 mm), and the following also shall apply:
   (a) The number of levels shall not be restricted.
   (b) Residential housing areas subdivided in accordance with 21.3.8.1 shall be permitted to be considered as part of the communicating space.
   (c) The separation specified in 21.3.1(2)(b) shall not be required to have a fire resistance rating. *[See 8.12.2(4)(b).]*

21.3.2 Hazardous Area Protection.

21.3.2.1* Any hazardous area shall be protected in accordance with Section 8.15. The areas described in the Table 21.3.2.1 shall be protected as indicated.

21.3.2.2 Where Table 21.3.2.1 requires separations to be smoke resistant, the provision of 8.15.2 shall not apply.

21.3.2.3 Hazardous areas determined by the authority having jurisdiction as not incidental to residents' housing shall be separated by 2-hour fire resistance–rated barriers in conjunction with automatic sprinkler protection.

21.3.2.4 Where cooking facilities are protected in accordance with Section 55.10, kitchens shall not be required to be provided with room-wide protection.

21.3.3 Interior Finish.

21.3.3.1 General. Interior finish shall be in accordance with Chapter 10.

21.3.3.2 Interior Wall and Ceiling Finish. Interior wall and ceiling finish in accordance with Chapter 10 shall be Class A or

--`,,```,,,,````-`-`,,`,,`,`,,`---

Copyright National Fire Protection Association
Provided by IHS under license with NFPA
No reproduction or networking permitted without license from IHS
Not for Resale

Table 21.3.2.1 Hazardous Area Protection

Hazardous Area Description	Separation/Protection
Areas not incidental to resident housing	2 hours
Boiler and fuel-fired heater rooms	1 hour
Central or bulk laundries >100 ft^2 (>9.3 m^2)	1 hour
Commercial cooking equipment	In accordance with Section 55.10
Commissaries	Smoke resistant
Employee locker rooms	Smoke resistant
Hobby/handicraft shops	Smoke resistant
Maintenance shops	Smoke resistant
Padded cells	1 hour
Soiled linen rooms	1 hour
Storage rooms >50 ft^2 (>4.6 m^2) but ≤100 ft^2 (≤9.3 m^2) storing combustible material	Smoke resistant
Storage rooms >100 ft^2 (>9.3 m^2) storing combustible materials	1 hour
Trash collection rooms	1 hour

Class B in corridors, in exits, and in any space not separated from corridors and exits by partitions capable of retarding the passage of smoke; and Class A, Class B, or Class C in all other areas. The provisions of 10.7.1 shall not apply.

21.3.3.3 Interior Floor Finish.

21.3.3.3.1 Interior floor finish shall comply with Section 10.6.

21.3.3.3.2 Interior floor finish in exit enclosures and in corridors shall be Class I or Class II.

21.3.3.3.3 Interior floor finish shall comply with 10.6.1 and 10.6.2, as applicable.

21.3.4 Detection, Alarm, and Communications Systems.

21.3.4.1 General. Detention and correctional occupancies shall be provided with a fire alarm system in accordance with Section 55.2, except as modified by 21.3.4.2 through 21.3.4.4.3.

21.3.4.2 Initiation. Initiation of the required fire alarm system shall be by manual means in accordance with 55.2.2, by means of any required detection devices or detection systems, and by means of waterflow alarm in the sprinkler system required by 21.3.5.2, unless otherwise permitted by the following:

(1) Manual fire alarm boxes shall be permitted to be locked, provided that staff is present within the subject area when occupied and staff has keys readily available to unlock the boxes.
(2) Manual fire alarm boxes shall be permitted to be located in a staff location, provided that the staff location is attended when the building is occupied and that the staff attendant has direct supervision of the sleeping area.

21.3.4.3 Notification.

21.3.4.3.1 Occupant Notification. Occupant notification shall be accomplished automatically in accordance with 55.2.3.

21.3.4.3.1.1 A positive alarm sequence shall be permitted in accordance with 55.2.3.4.

21.3.4.3.1.2* Any smoke detectors required by this chapter shall be permitted to be arranged to alarm at a constantly attended location only and shall not be required to accomplish general alarm indication.

21.3.4.3.2 Emergency Forces Notification. Fire department notification shall be accomplished in accordance with 55.2.4.

21.3.4.3.2.1 A positive alarm sequence shall be permitted in accordance with 55.2.3.4.

21.3.4.3.2.2 Any smoke detectors required by this chapter shall not be required to transmit an alarm to the fire department.

21.3.4.3.2.3 The requirement of 21.3.4.3.2 shall not apply where staff is provided at a constantly attended location that has the capability to promptly notify the fire department or has direct communication with a control room having direct access to the fire department.

21.3.4.4* Detection. An approved automatic smoke detection system shall be installed in accordance with Section 55.2, as modified by 21.3.4.4.1 through 21.3.4.4.3, throughout all resident sleeping areas and adjacent day rooms, activity rooms, or contiguous common spaces.

21.3.4.4.1 Smoke detectors shall not be required in sleeping rooms with four or fewer occupants.

21.3.4.4.2 Other arrangements and positioning of smoke detectors shall be permitted to prevent damage or tampering, or for other purposes. Such arrangements shall be capable of detecting any fire, and the placement of detectors shall be such that the speed of detection is equivalent to that provided by the spacing and arrangements required by the installation standards referenced in Section 55.2. Detectors shall be permitted to be located in exhaust ducts from cells, behind grilles, or in other locations. The equivalent performance of the design, however, shall be acceptable to the authority having jurisdiction in accordance with the equivalency concepts specified in Section 1.5.

21.3.4.4.3* Smoke detectors shall not be required in Use Condition II open dormitories where staff is present within the dormitory whenever the dormitory is occupied.

21.3.5 Extinguishment Requirements.

21.3.5.1 High-rise buildings shall comply with 21.4.3.

21.3.5.2 All buildings classified as Use Condition II, Use Condition III, Use Condition IV, or Use Condition V shall be protected throughout by an approved, electrically supervised automatic sprinkler system installed in accordance with NFPA 13, *Standard for the Installation of Sprinkler Systems.*

21.3.5.3 The automatic sprinkler system required by 21.3.5.2 shall comply with the following:

(1) It shall be in complete accordance with Section 55.3.
(2) It shall be electrically connected to the fire alarm system.
(3) It shall be electrically supervised in accordance with 55.3.2.

21.3.5.4 Portable fire extinguishers shall be provided in accordance with Section 55.6, unless otherwise permitted by the following:

(1)*Access to portable fire extinguishers shall be permitted to be locked.

Copyright National Fire Protection Association
Provided by IHS under license with NFPA
No reproduction or networking permitted without license from IHS
Not for Resale

(2) Portable fire extinguishers shall be permitted to be located at staff locations only.

21.3.5.5 Standpipes shall be in accordance with 21.3.5.5.1 and 21.3.5.5.2.

21.3.5.5.1 A Class I standpipe system shall be provided in accordance with Section 55.4 where any of the following conditions exist:

(1) A minimum of one floor level is more than 30 ft (9.1 m) above or below the level of fire department access.
(2) Any point on a floor in a building is more than 200 ft (61 m) from its nearest point of fire department entry into the building.
(3) The building is four or more stories in height or has four or more basement levels as specified in 55.4.1.

21.3.5.5.2 Standpipe system roof outlets shall not be required in other than high-rise buildings.

21.3.6 Corridors. Corridors shall be in accordance with 21.3.8.1.

21.3.7 Subdivision of Building Spaces.

21.3.7.1 Smoke barriers shall be provided to divide every story used for sleeping by residents, or any other story having an occupant load of 50 or more persons, into a minimum of two compartments.

21.3.7.1.1 Protection shall be permitted to be accomplished with horizontal exits. *(See 21.2.2.5.)*

21.3.7.1.2* The requirement of 21.3.7.1 shall be permitted to be fulfilled by one of the following:

(1) Smoke compartments having exit to a public way where such exit serves only one area and has no openings to other areas
(2) Building separated from the resident housing area by a 2-hour fire resistance rating or 50 ft (15 m) of open space
(3) Secured, open area having a holding space located 50 ft (15 m) from the housing area that provides 15 ft^2 (1.4 m^2) or more of refuge area for each person (resident, staff, visitors) potentially present at the time of a fire

21.3.7.1.3 Doors used to access the areas specified in 21.3.7.1.2(1) through (3) shall meet the requirements for doors at smoke barriers for the applicable use condition.

21.3.7.2 Where smoke barriers are required by 21.3.7.1, they shall be provided as follows:

(1) They shall limit the occupant load to not more than 200 residents in any smoke compartment.
(2) They shall limit the travel distance to a door in a smoke barrier as follows:
    (a) The distance from any room door required as exit access shall not exceed 150 ft (46 m).
    (b) The distance from any point in a room shall not exceed 200 ft (61 m).

21.3.7.3* Any required smoke barrier shall be constructed in accordance with Section 8.11. Barriers shall be of substantial construction and shall have structural fire resistance.

21.3.7.4 Openings in smoke barriers shall be protected in accordance with 8.4.2, unless otherwise permitted by the following:

(1)*There shall be no restriction on the total number of vision panels in any barrier.

(2) Sliding doors in smoke barriers that are designed to normally be kept closed and are remotely operated from a continuously attended location shall not be required to be self-closing.

21.3.7.5 At least 6 net ft^2 (0.56 net m^2) per occupant shall be provided on each side of the smoke barrier for the total number of occupants in adjoining compartments. This space shall be readily available wherever occupants are moved across the smoke barrier in a fire emergency.

21.3.7.6 Doors shall resist the passage of smoke where installed in smoke barriers in accordance with 21.3.7.4. Doors shall be exempt from the requirement of 8.11.4.1. Swinging doors shall be self-latching, or the opening resistance of the door shall be a minimum of 5 lbf (22 N).

21.3.7.7 Doors in smoke barriers shall conform with the requirements for doors in means of egress, as specified in 21.2.2, and shall have locking and release arrangements according to the applicable use condition. The provisions of 21.2.11.7.1 and 21.2.11.7.2 shall not be used for smoke barrier doors serving a smoke compartment containing more than 20 persons.

21.3.7.8 Vision panels shall be provided in smoke barriers at points where the barrier crosses an exit access corridor.

21.3.7.9 Smoke dampers shall be provided in accordance with 8.11.6, and the following also shall apply:

(1) Other arrangements and positioning of smoke detectors shall be permitted to prevent damage or tampering, or for other purposes.
(2) Such other arrangements shall be capable of detecting any fire, and the placement of detectors shall be such that the speed of detection is equivalent to that provided by the spacing and arrangement required by *NFPA 72, National Fire Alarm Code*, as referenced in 8.11.6.7.

21.3.8* Special Protection Features — Subdivision of Resident Housing Spaces.

21.3.8.1 Subdivision of facility spaces shall comply with Table 21.3.8.1.

21.4 Special Provisions.

21.4.1 Limited Access Structures. The provisions of Section 31.3 for limited access structures shall not apply.

21.4.2 Underground Structures. Underground structures shall be in accordance with Section 31.2.

21.4.3* High-Rise Buildings. High-rise buildings shall comply with Section 33.2.

21.4.4 Nonsprinklered Existing Building Rehabilitation.

21.4.4.1 General. Rehabilitation of nonsprinklered existing buildings shall be permitted to meet the requirements of this chapter, as modified by 21.4.4.2 through 21.4.4.13, in lieu of the sprinkler requirement of 21.3.5.2.

21.4.4.2 Minimum Construction Requirements (Nonsprinklered Buildings). Detention and correctional occupancies in nonsprinklered buildings shall be limited to the types of building construction permitted by Chapter 15.

21.4.4.3* Horizontal Exit Duct Penetrations (Nonsprinklered Buildings). Ducts shall be permitted to penetrate horizontal exits in accordance with 11.2.4.3.4(2) if protected by combination fire dampers/smoke leakage–rated dampers that meet the smoke damper actuation requirements of 8.11.6.7.

Copyright National Fire Protection Association
Provided by IHS under license with NFPA
No reproduction or networking permitted without license from IHS
Not for Resale

Table 21.3.8.1 Subdivision of Resident Housing Spaces

Feature	Use Condition			
	II	**III**	**IV**	**V**
Room to room separation	NR	NR	NR	SR
Room face to corridor separation	NR	NR	NR	SR
Room face to common space separation	NR	NR if ≤50 ft (≤15 m)* SR if >50 ft (>15 m)*	NR if ≤50 ft (≤15 m)* SR if >50 ft (>15 m)*	SR
Common space to corridor separation	NR	NR	NR	SR
Total openings in solid room face where room face is required to be smoke resistant or fire rated†	120 in.^{2} (0.08 m^2)	120 in.^{2} (0.08 m^2)	120 in.^{2} (0.08 m^2)	120 in.^{2} (0.08 m^2) where openings meet one of the following: (1) Closed, except when in use by staff (2) Closable from the inside (3) Provided with smoke control

NR: No requirement. SR: Smoke resistant.

Notes:

(1) Doors in openings in partitions required to be smoke resistant (SR) in accordance with Table 21.3.8.1 are to be substantial doors of construction that resists the passage of smoke. Latches and door closers are not required on cell doors.

(2) Under Use Condition II, Use Condition III, or Use Condition IV, a space subdivided by open construction (any combination of grating doors and grating walls or solid walls) is permitted to be considered one room if housing not more than 16 persons. The perimeter walls of such space are to be of smoke-resistant construction. Smoke detection is to be provided in such space. Under Use Condition IV, common walls between sleeping areas within the space are to be smoke resistant, and grating doors and fronts are permitted to be used. Under Use Condition II and Use Condition III, open dormitories are permitted to house more than 16 persons, as permitted by other sections of this chapter.

(3) Where barriers are required to be smoke resistant (SR), the provisions of Sections 8.10 and 8.11 do not apply.

* Travel distance through the common space to the exit access corridor.

† "Total openings in solid room face" includes all openings (for example, undercuts, food passes, grilles), the total of which is not to exceed 120 in.^{2} (0.08 m^2). All openings are to be 36 in. (915 mm) or less above the floor.

21.4.4.4 Common Path of Travel (Nonsprinklered Buildings). A common path of travel shall not exceed 50 ft (15 m).

21.4.4.5 Travel Distance to Exits (Nonsprinklered Buildings).

21.4.4.5.1 The travel distance between any room door required as an exit access and an exit shall not exceed 100 ft (30 m).

21.4.4.5.2 The travel distance between any point in a room and an exit shall not exceed 150 ft (46 m).

21.4.4.6 Protection of Vertical Openings (Nonsprinklered Buildings).

21.4.4.6.1 Multilevel residential housing areas without enclosure protection between levels shall be permitted, provided that the conditions of 21.4.4.6.2 through 21.4.4.6.4 are met.

21.4.4.6.2* The entire normally occupied area, including all communicating floor levels, shall be sufficiently open and unobstructed so that a fire or other dangerous condition in any part is obvious to the occupants or supervisory personnel in the area.

21.4.4.6.3 Egress capacity shall simultaneously accommodate all occupants of all communicating levels and areas, with all communicating levels in the same fire area considered as a single floor area for purposes of determining required egress capacity.

21.4.4.6.4* The height between the highest and lowest finished floor levels shall not exceed 13 ft (3960 mm). The number of levels shall not be restricted.

21.4.4.7 Hazardous Area Protection (Nonsprinklered Buildings). Any hazardous area shall be protected in accordance with Section 8.15. The areas described in Table 21.4.4.7 shall be protected as indicated.

21.4.4.8 Interior Finish (Nonsprinklered Buildings).

21.4.4.8.1 Interior Wall and Ceiling Finish. Interior wall and ceiling finish in accordance with Chapter 10 shall be Class A in corridors, in exits, and in any space not separated from corridors and exits by partitions capable of resisting the passage of smoke; and Class A, Class B, or Class C in all other areas.

21.4.4.8.2 Interior Floor Finish. Interior floor finish in accordance with Chapter 10 shall be Class I in corridors and exits.

21.4.4.9 Detection, Alarm, and Communications Systems (Nonsprinklered Buildings).

21.4.4.9.1 Initiation. Initiation of the fire alarm system required by 21.3.4.1 shall be by manual means in accordance with 55.2.2 and by means of any required detection devices or detection systems, unless otherwise permitted by the following:

Copyright National Fire Protection Association
Provided by IHS under license with NFPA
No reproduction or networking permitted without license from IHS
Not for Resale

Table 21.4.4.7 Hazardous Area Protection (Nonsprinklered Buildings)

Hazardous Area Description	Separation/Protection
Areas not incidental to resident housing	2 hours
Boiler and fuel-fired heater rooms	2 hours or 1 hour and sprinklers
Central or bulk laundries >100 ft^2 (>9.3 m^2)	2 hours or 1 hour and sprinklers
Commercial cooking equipment	In accordance with Section 55.10
Commissaries	1 hour or sprinklers
Employee locker rooms	1 hour or sprinklers
Hobby/handicraft shops	1 hour or sprinklers
Maintenance shops	1 hour or sprinklers
Padded cells	2 hours or 1 hour and sprinklers
Soiled linen rooms	2 hours or 1 hour and sprinklers
Storage rooms >50 ft^2 (>4.6 m^2) but ≤100 ft^2 (≤9.3 m^2) storing combustible material	1 hour or sprinklers
Storage rooms >100 ft^2 (>9.3 m^2) storing combustible materials	2 hours or 1 hour and sprinklers
Trash collection rooms	2 hours or 1 hour and sprinklers

(1) Manual fire alarm boxes shall be permitted to be locked, provided that staff is present within the area when it is occupied and staff has keys readily available to unlock the boxes.
(2) Manual fire alarm boxes shall be permitted to be located in a staff location, provided that the staff location is attended when the building is occupied and that the staff attendant has direct supervision of the sleeping area.

21.4.4.9.2 Detection. An approved automatic smoke detection system shall be provided in accordance with Section 55.2, as modified by 21.4.4.9.2.1 and 21.4.4.9.2.2, throughout all resident sleeping areas and adjacent day rooms, activity rooms, or contiguous common spaces.

21.4.4.9.2.1 Smoke detectors shall not be required in sleeping rooms with four or fewer occupants in Use Condition II or Use Condition III.

21.4.4.9.2.2 Other arrangements and positioning of smoke detectors shall be permitted to prevent damage or tampering, or for other purposes. Such arrangements shall be capable of detecting any fire, and the placement of detectors shall be such that the speed of detection is equivalent to that provided by the spacing and arrangements required by the installation standards referenced in Section 55.2. Detectors shall be permitted to be located in exhaust ducts from cells, behind grilles, or in other locations. The equivalent performance of the design, however, shall be acceptable to the authority having jurisdiction in accordance with the equivalency concepts specified in Section 1.5.

21.4.4.10 Standpipes (Nonsprinklered Buildings).

21.4.4.10.1 A Class III standpipe and hose system shall be provided in accordance with 55.4.2 in all nonsprinklered buildings over two stories in height.

21.4.4.10.2 Separate Class I and Class II standpipe systems shall be permitted in lieu of the Class III system required by 21.4.4.10.1.

21.4.4.10.3 One inch (25 mm) diameter formed hose on reels shall be permitted to provide the Class II service permitted by 21.4.4.10.2.

21.4.4.11 Subdivision of Building Spaces (Nonsprinklered Buildings). Where smoke barriers are required by 21.3.7.1, they shall be provided as follows:

(1) They shall limit the occupant load to not more than 200 residents in any smoke compartment.
(2) They shall limit the travel distance to a door in a smoke barrier as follows:
   (a) The distance from any room door required as exit access shall not exceed 100 ft (30 m).
   (b) The distance from any point in a room shall not exceed 150 ft (46 m).

21.4.4.12* Subdivision of Resident Housing Spaces (Nonsprinklered Buildings). Subdivision of facility spaces shall comply with Table 21.4.4.12.

21.4.4.13 Limited Access Buildings (Nonsprinklered Buildings).

21.4.4.13.1 Limited access buildings used as detention and correctional occupancies shall comply with 21.4.4.13.2. The provisions of Section 31.3 for limited access structures shall not apply.

21.4.4.13.2 Means shall be provided to evacuate smoke from the smoke compartment of fire origin. Any of the following means shall be acceptable:

(1) Operable windows on not less than two sides of the building, spaced not more than 30 ft (9.1 m) apart, that provide openings with dimensions of not less than 22 in. (560 mm) in width and 24 in. (610 mm) in height
(2) *Manual or automatic smoke vents
(3) Engineered smoke control system
(4) Mechanical exhaust system providing not less than six air changes per hour
(5) Other method acceptable to the authority having jurisdiction

21.4.5 Lockups.

21.4.5.1 General.

21.4.5.1.1 Lockups, in occupancies other than detention and correctional occupancies and health care occupancies, where the holding area has capacity for more than 50 detainees shall be classified as detention and correctional occupancies and shall comply with the requirements of Chapter 21.

21.4.5.1.2 Lockups, in occupancies other than detention and correctional occupancies and health care occupancies, where any individual is detained for 24 or more hours shall be classified as detention and correctional occupancies and shall comply with the requirements of Chapter 21.

21.4.5.1.3 Lockups, in occupancies other than detention and correctional occupancies and health care occupancies, where the holding area has capacity for not more than 50 detainees, and where no individual is detained for 24 hours or more, shall comply with 21.4.5.1.4 or 21.4.5.1.5.

--`,,```,,,,````-`-`,,`,,`,`,,`---

Copyright National Fire Protection Association
Provided by IHS under license with NFPA
No reproduction or networking permitted without license from IHS
Not for Resale

Table 21.4.4.12 Subdivision of Resident Housing Spaces—Nonsprinklered Buildings

Feature	Use Condition			
	II	**III**	**IV**	**V**
Room to room separation	NR	NR	SR	FR(½)
Room face to corridor separation	SR	SR	SR	FR
Room face to common space separation	NR	NR if ≤50 ft (≤15 m)* / SR if >50 ft (>15 m)*	SR	FR
Common space to corridor separation	FR	FR	FR	FR
Total openings in solid room face where room face is required to be smoke resistant or fire rated†	120 in.^{2} (0.08 m^2)	120 in.^{2} (0.08 m^2)	120 in.^{2} (0.08 m^2)	120 in.^{2} (0.08 m^2) where openings meet one of the following: (1) Closed, except when in use by staff (2) Closable from the inside (3) Provided with smoke control

NR: No requirement. SR: Smoke resistant. FR(½): Fire rated — ½ hour. FR: Fire rated — 1 hour.

Notes:

(1) Doors in openings in partitions required to be smoke resistant (SR) in accordance with Table 21.4.4.12 are to be substantial doors of construction that resists the passage of smoke. Latches and door closers are not required on cell doors.

(2) Under Use Condition II, Use Condition III, or Use Condition IV, a space subdivided by open construction (any combination of grating doors and grating walls or solid walls) is permitted to be considered one room if housing not more than 16 persons. The perimeter walls of such space are to be of smoke-resistant construction. Smoke detection is to be provided in such space. Under Use Condition IV, common walls between sleeping areas within the space are to be smoke resistant, and grating doors and fronts are permitted to be used. Under Use Condition II and Use Condition III, open dormitories are permitted to house more than 16 persons, as permitted by other sections of this chapter.

(3) Where barriers are required to be smoke resistant (SR), the provisions of Section 8.10 and 8.11 do not apply.

* Travel distance through the common space to the exit access corridor.

† "Total openings in solid room face" includes all openings (for example, undercuts, food passes, grilles), the total of which is not to exceed 120 in.^{2} (0.08 m^2). All openings are to be 36 in. (915 mm) or less above the floor.

21.4.5.1.4 The lockup shall be permitted to comply with the requirements for the predominant occupancy in which the lockup is placed, provided that all of the following criteria are met:

(1) Doors and other physical restraints to free egress by detainees can be readily released by staff within 2 minutes of the onset of fire or similar emergency.
(2) The staff is in sufficient proximity to the lockup so as to be able to effect the 2-minute release required by 21.4.5.1.4(1) whenever detainees occupy the lockup.
(3) The staff is authorized to effect the release required by 21.4.5.1.4(1).
(4) The staff is trained and practiced in effecting the release required by 21.4.5.1.4(1).
(5) Where the release required by 21.4.5.1.4(1) is effected by means of remote release, detainees are not restrained from evacuating without the assistance of others.

21.4.5.1.5 Where the lockup does not comply with all the criteria of 21.4.5.1.4, the alternative requirements of 21.4.5.2 shall be met.

21.4.5.2 Alternative Requirements.

21.4.5.2.1 The requirements applicable to the predominant occupancy in which the lockup is placed shall be met.

21.4.5.2.2 Where security operations necessitate the locking of required means of egress, the following shall apply:

(1) Detention-grade hardware meeting the criteria of ASTM F 1577, *Standard Test Method for Detention Locks for Swinging Doors*, shall be provided on swinging doors within the required means of egress.
(2) Sliding doors within the required means of egress shall be designed and engineered for detention and correctional use, and lock cylinders shall meet the cylinder test requirements of ASTM F 1577.

21.4.5.2.3 The lockup shall be provided with a complete smoke detection system in accordance with 55.2.2.3.

21.4.5.2.4 Where the requirements applicable to the predominant occupancy do not require a fire alarm system, the lockup shall be provided with a fire alarm system meeting the following criteria:

(1) The alarm system shall be in accordance with Section 55.2.
(2) Initiation of the alarm system shall be accomplished by all of the following:
    (a) Manual fire alarm boxes in accordance with 55.2.2
    (b) Smoke detection system required by 21.4.5.2.3
    (c) Automatic sprinkler system(s) required by the provisions applicable to the predominant occupancy

Copyright National Fire Protection Association
Provided by IHS under license with NFPA
No reproduction or networking permitted without license from IHS
Not for Resale

(3) Staff and occupant notification shall be provided automatically in accordance with 55.2.3.
(4) Emergency force notification shall be provided in accordance with 55.2.4.

21.5 Building Services.

21.5.1 Utilities.

21.5.1.1 Utilities shall comply with the provisions of Chapters 49, 52, and 53.

21.5.1.2 Alarms, emergency communications systems, and the illumination of generator set locations shall be provided with emergency power in accordance with NFPA 70, *National Electrical Code*.

21.5.2 Heating, Ventilating, and Air-Conditioning.

21.5.2.1 Heating, ventilating, and air-conditioning equipment shall comply with the provisions of Chapters 50 and 51 and shall be installed in accordance with the manufacturer's specifications, unless otherwise modified by 21.5.2.2.

21.5.2.2 Portable space-heating devices shall be prohibited. Any heating device, other than a central heating plant, shall be designed and installed so that combustible material is not ignited by the device or its appurtenances and shall comply with 21.5.2.2.1 and 21.5.2.2.2.

21.5.2.2.1 If fuel-fired, heating devices shall be chimney or vent connected, shall take air for combustion directly from the outside, and shall be designed and installed to provide for complete separation of the combustion system from the atmosphere of the occupied area.

21.5.2.2.2 Any heating device shall have safety devices to immediately stop the flow of fuel and shut down the equipment in case of either excessive temperatures or ignition failure.

21.5.2.2.3 Approved, suspended unit heaters shall be permitted in locations other than means of egress and sleeping areas, provided that such heaters are located high enough to be out of the reach of persons using the area and are vent connected and equipped with the safety devices required by 21.5.2.2.1 and 21.5.2.2.2.

21.5.2.3 Combustion and ventilation air for boiler, incinerator, or heater rooms shall be taken directly from, and discharged directly to, the outside air.

21.5.3 Elevators, Escalators, and Conveyors. Elevators, escalators, and conveyors shall comply with the provisions of Chapter 54.

21.5.4 Rubbish Chutes, Incinerators, and Laundry Chutes.

21.5.4.1 Rubbish chutes, incinerators, and laundry chutes shall comply with the provisions of Section 8.17.

21.5.4.2 Any rubbish chute or linen chute, including pneumatic rubbish and linen systems, shall be provided with automatic extinguishing protection in accordance with Section 8.17.

21.5.4.3 Any trash chute shall discharge into a trash collection room used for no other purpose and protected in accordance with Section 8.17.

21.5.4.4 Incinerators shall not be directly flue-fed, nor shall any floor chute directly connect with the combustion chamber.

Chapter 22 One- and Two-Family Dwellings

22.1 General Requirements.

22.1.1 Application.

22.1.1.1 This chapter shall establish life safety requirements for all one- and two-family dwellings.

22.1.1.2* One- and two-family dwellings shall be limited to buildings containing not more than two dwelling units in which each dwelling unit is occupied by members of a single family with not more than three outsiders, if any, accommodated in rented rooms.

22.1.1.3 The requirements of this chapter shall apply to new buildings or portions thereof used as a one- or two-family dwelling.

22.1.1.4 Repairs, renovations, modifications, additions, and reconstruction of a one- or two-family dwelling, and changes of use, including change of occupancy classification to a one- and two-family dwelling, or correction of a damaged or unsafe portion of the building containing the one- or two-family dwelling, shall comply with one of the following:

(1) Provisions of this chapter
(2) Provisions of Chapter 15

22.1.2 Multiple Occupancies.

22.1.2.1 All multiple occupancies shall be in accordance with Section 6.2 and 22.1.2. Where there are differences in the specific requirements in this chapter and provisions for mixed occupancies or separated occupancies as specified in 6.2.3 and 6.2.4, the requirements of this chapter shall apply. *(See 4.3.2.3.)*

22.1.2.2 No dwelling unit of a residential occupancy shall have its sole means of egress pass through any nonresidential occupancy in the same building, unless otherwise permitted by 22.1.2.2.1 or 22.1.2.2.2.

22.1.2.2.1 In buildings that are protected by an automatic sprinkler system in accordance with Section 55.3, dwelling units of a residential occupancy shall be permitted to have their sole means of egress pass through a nonresidential occupancy in the same building, provided that the following criteria are met:

(1) The dwelling unit of the residential occupancy shall comply with Chapter 22.
(2) The sole means of egress from the dwelling unit of the residential occupancy shall not pass through a high hazard contents area as defined in 6.3.2.4.

22.1.2.2.2 In buildings that are not protected by an automatic sprinkler system in accordance with Section 55.3, dwelling units of a residential occupancy shall be permitted to have their sole means of egress pass through a nonresidential occupancy in the same building, provided that the following criteria are met:

(1) The sole means of egress from the dwelling unit of the residential occupancy to the exterior shall be separated from the remainder of the building by fire barriers having a fire resistance rating of not less than 1 hour.
(2) The dwelling unit of the residential occupancy shall comply with Chapter 22.

Copyright National Fire Protection Association
Provided by IHS under license with NFPA
No reproduction or networking permitted without license from IHS
Not for Resale

(3) The sole means of egress from the dwelling unit of the residential occupancy shall not pass through a high hazard contents area as defined in 6.3.2.4.

22.1.2.3 Multiple dwelling units of a residential occupancy shall be permitted to be located above a nonresidential occupancy only where one of the following conditions exists:

(1) Where the dwelling unit of the residential occupancy and exits therefrom are separated from the nonresidential occupancy by construction having a fire resistance rating of not less than 1 hour
(2) Where the nonresidential occupancy is protected throughout by an approved automatic sprinkler system in accordance with Section 55.3 that is electrically supervised in accordance with 55.3.2
(3) Where the nonresidential occupancy is protected by an automatic fire detection system in accordance with Section 55.2

22.1.3 Classification of Occupancy. One- and two-family dwellings shall be classified in accordance with 6.1.8.1.1.

22.1.4 Classification of Hazard of Contents. The contents of residential occupancies shall be classified as ordinary hazard in accordance with Section 6.3.

22.1.5 Minimum Construction Requirements. Construction shall be in accordance with all of the following:

(1) Chapter 7, Construction Types and Height and Area Requirements
(2) Chapter 8, Fire-Resistive Materials and Construction
(3) Chapter 13, Encroachments into the Public Right-of-Way
(4) Chapter 14, Safeguards During Construction
(5) Chapter 31, Occupancies in Special Structures
(6) Chapter 35, Structural Design
(7) Chapter 36, Soils, Foundations, and Retaining Walls
(8) Chapter 37, Exterior Wall Construction
(9) Chapter 38, Roof Assemblies and Roof Structures
(10) Chapter 39, Flood-Resistant Design and Construction
(11) Chapter 40, Quality Assurance During Construction

22.1.6 Occupant Load. (No requirements)

22.1.7 Accessibility. (No requirements)

22.2* Means of Escape Requirements.

22.2.1 General. The provisions of Chapter 11 shall not apply to means of escape, unless specifically referenced in this chapter.

22.2.2 Number and Types of Means of Escape.

22.2.2.1 In dwellings or dwelling units of two rooms or more, every sleeping room and every living area shall have not less than one primary means of escape.

22.2.2.2 The primary means of escape shall be a door, stairway, or ramp providing a means of unobstructed travel to the outside of the dwelling unit at street or ground level.

22.2.2.3 In dwellings or dwelling units of two rooms or more, every sleeping room and every living area shall have not less than one secondary means of escape, unless one of the following conditions is met:

(1) The bedroom or living area has a door leading directly to the outside of the building at or to grade level.
(2) The dwelling unit is protected throughout by an approved automatic sprinkler system in accordance with 22.3.5.

22.2.2.4* The secondary means of escape shall be as described in 22.2.2.4.1, 22.2.2.4.2, or 22.2.2.4.3.

22.2.2.4.1 The secondary means of escape shall be a door, stairway, passage, or hall providing a way of unobstructed travel to the outside of the dwelling at street or ground level that is independent of, and remote from, the primary means of escape.

22.2.2.4.2 The secondary means of escape shall be a passage through an adjacent nonlockable space, independent of and remote from the primary means of escape, to any approved means of escape.

22.2.2.4.3* The secondary means of escape shall be an outside window or door operable from the inside without the use of tools, keys, or special effort and shall provide a clear opening of not less than 5.7 ft^2 (0.53 m^2).

22.2.2.4.3.1 The width of the opening described in 22.2.2.4.3 shall be not less than 20 in. (510 mm), the height shall be not less than 24 in. (610 mm), and the bottom of the opening shall be not more than 44 in. (1120 mm) above the floor.

22.2.2.4.3.2 The means of escape, as described in 22.2.2.4.3, shall be acceptable where one of the following criteria is met:

(1) The window shall be within 20 ft (6100 mm) of grade.
(2) The window shall be directly accessible to fire department rescue apparatus, as approved by the authority having jurisdiction.
(3) The window or door shall open onto an exterior balcony.
(4) Windows having a sill height below the adjacent ground level shall be provided with a window well meeting the following criteria:
   (a) The window well shall have horizontal dimensions that allow the window to be fully opened.
   (b) The window well shall have an accessible net clear opening of not less than 9 ft^2 (0.82 m^2), with a length and width of not less than 36 in. (915 mm).
   (c) A window well with a vertical depth of more than 44 in. (1120 mm) shall be equipped with an approved, permanently affixed ladder or with steps meeting the following criteria:
      i. The ladder or steps shall not encroach more than 6 in. (150 mm) into the required dimensions of the window well.
      ii. The ladder or steps shall not be obstructed by the window.
      iii. Ladders or steps that comply with the requirements of 22.2.2.4.3.2(4)(c)(i) and (ii) shall be exempt from the requirements of 11.2.2.

22.2.2.4.3.3 Bars, grilles, grates, or similar devices shall be permitted to be installed on windows, doors, or window wells used for means of escape, provided that all the following criteria are met:

(1) The device is equipped with approved release mechanisms that are openable from the inside without the use of a key or special knowledge or effort.
(2) The building is equipped with smoke alarms installed in accordance with 22.3.4.
(3) The device does not conceal the location of the means of escape from emergency rescue personnel.
(4) The device does not reduce the size of the opening as required by 22.2.2.4.3.1.

Copyright National Fire Protection Association
Provided by IHS under license with NFPA
No reproduction or networking permitted without license from IHS
Not for Resale

22.2.2.5 In buildings other than those protected throughout by an approved automatic sprinkler system in accordance with 22.3.5 that is electrically supervised in accordance with 55.3.2, every story having an area greater than 2000 ft^2 (185 m^2) within the dwelling unit shall be provided with two primary means of escape remotely located from each other.

22.2.3 Arrangement of Means of Escape. Any required path of travel in a means of escape from any room to the outside shall not pass through another room or apartment not under the immediate control of the occupant of the first room or through a bathroom or other space subject to locking.

22.2.4 Doors.

22.2.4.1 Doors in the path of travel of a means of escape, other than bathroom doors in accordance with 22.2.4.2 and doors serving a room not exceeding 70 ft^2 (6.5 m^2), shall be not less than 28 in. (710 mm) wide.

22.2.4.2 Bathroom doors, and doors serving a room not exceeding 70 ft^2 (6.5 m^2), shall be not less than 24 in. (610 mm) wide.

22.2.4.3 Doors shall be not less than 6 ft 6 in. (1980 mm) in nominal height.

22.2.4.4 Every closet door latch shall be such that the door can be opened from inside the closet.

22.2.4.5 Every bathroom door shall be designed to allow opening from the outside during an emergency when locked.

22.2.4.6 Doors shall be swinging or sliding.

22.2.4.7* All locking devices on doors in any means of escape that impede or prohibit egress, or that cannot be easily disengaged, shall be prohibited.

22.2.4.8 Floor levels at doors shall comply with 11.2.1.3.

22.2.4.9 Forces to open doors shall comply with 11.2.1.4.4.

22.2.4.10 Latching devices for doors shall comply with 11.2.1.5.10.

22.2.5 Stairs, Ramps, Guards, and Handrails.

22.2.5.1 Stairs, ramps, guards, and handrails shall be in accordance with 11.2.2 for stairs, 11.2.5 for ramps, and 11.2.2.4 for guards and handrails.

22.2.5.1.1 The provisions of 11.2.2.5, 11.2.5.6, and 11.7.3 shall not apply to stairs and ramps.

22.2.5.1.2 If serving as a secondary means of escape, stairs complying with the fire escape requirements of Table 7.2.8.4.1(a) or Table 7.2.8.4.1(b) of NFPA *101*, *Life Safety Code*, shall be permitted.

22.2.5.1.3 If serving as secondary means of escape, ramps complying with Table 22.2.5.1.3 shall be permitted.

Table 22.2.5.1.3 Secondary Means of Escape Ramp Criteria

Feature	Class A	Class B
Minimum width	44 in. (1120 mm)	30 in. (760 mm)
Maximum slope	1 in 10	1 in 8
Maximum height between landings	12 ft (3660 mm)	12 ft (3660 mm)

22.2.5.2 The clear width of stairs, landings, ramps, balconies, and porches shall be not less than 36 in. (915 mm), measured in accordance with 11.3.2.

22.2.5.3 Spiral stairs and winders in accordance with 11.2.2.2.3.2 and 11.2.2.2.4 shall be permitted within a single dwelling unit.

22.2.5.4 No sleeping rooms or living areas shall be accessible only by a ladder, a stair ladder, an alternating tread device, or folding stairs or through a trap door.

22.2.5.5 Interior stairways shall be provided with means capable of providing artificial light at the minimum level specified by 11.8.1.3 for exit stairs, measured at the center of treads, and on landing surfaces within 24 in. (610 mm) of step nosings.

22.2.5.6 For interior stairways, manual lighting controls shall be reachable and operable without traversing any step of the stair.

22.2.6 Hallways.

22.2.6.1 The width of hallways shall be not less than 36 in. (915 mm).

22.2.6.2 The height of hallways shall be not less than 7 ft (2135 mm) nominal, with clearance below projections from the ceiling of not less than 6 ft 8 in. (2030 mm) nominal.

22.2.7 Bulkheads.

22.2.7.1 Where provided, bulkhead enclosures shall provide direct access to the basement from the exterior.

22.2.7.2 Stairways serving bulkhead enclosures, not part of the required primary means of escape, and that provide access from the outside grade level to the basement, shall be exempt from the provisions of 22.2.5.1 when the maximum height from the basement finished floor level to grade adjacent to the stairway does not exceed 8 ft (2440 mm), and the grade level opening to the stairway is covered by a bulkhead enclosure with hinged doors or other approved means.

22.3 Protection.

22.3.1 Protection of Vertical Openings. (No requirements)

22.3.2 Reserved.

22.3.3 Interior Finish.

22.3.3.1 General. Interior finish shall be in accordance with Chapter 10.

22.3.3.2 Walls and Ceilings. Interior finish on walls and ceilings of occupied spaces shall be Class A, Class B, or Class C.

22.3.3.3 Interior Floor Finish.

22.3.3.3.1 Interior floor finish shall comply with Section 10.6.

22.3.3.3.2 Interior floor finish shall not be required to be classified as Class I or Class II.

22.3.3.3.3 Interior floor finish shall comply with 10.6.1 or 10.6.2, as applicable.

22.3.4 Detection, Alarm, and Communications Systems. Smoke alarms shall be provided in accordance with either 22.3.4.1 or 22.3.4.2.

22.3.4.1 Smoke alarms shall be installed in accordance with 55.2.2.6 in the following locations:

(1) In all sleeping rooms

--`,,```,,,,````-`-`,,`,,`,`,,`---
Copyright National Fire Protection Association
Provided by IHS under license with NFPA
No reproduction or networking permitted without license from IHS
Not for Resale

(2) Outside of each separate sleeping area, in the immediate vicinity of the sleeping rooms
(3) On each level of the dwelling unit, including basements

22.3.4.2 Dwelling units shall protected by an approved smoke detection system in accordance with Section 55.2 and equipped with an approved means of occupant notification.

22.3.5* Extinguishment Requirements.

22.3.5.1 All one- and two-family dwellings shall be protected throughout by an automatic sprinkler system installed in accordance with 22.3.5.2.

22.3.5.2* Unless otherwise specified in Chapter 7, where modifications are permitted by this *Code* based on the installation of an automatic sprinkler system, such modifications shall be permitted where the automatic sprinkler system complies with NFPA 13, *Standard for the Installation of Sprinkler Systems*; NFPA 13D, *Standard for the Installation of Sprinkler Systems in One- and Two-Family Dwellings and Manufactured Homes*; or NFPA 13R, *Standard for the Installation of Sprinkler Systems in Residential Occupancies up to and Including Four Stories in Height.*

22.3.5.3 Where an automatic sprinkler system is provided, either for total or partial building coverage, the system shall be in accordance with NFPA 13, NFPA 13D, or NFPA 13R.

22.4 Separation Between Townhouses. Each townhouse shall be constructed as a separate building. Townhouses shall be separated from adjoining townhouses by exterior walls constructed in accordance with Section 7.3, or by a single wall meeting the requirements of 22.4.1 through 22.4.6.

22.4.1 Walls used to create separate buildings shall provide not less than a 2-hour fire resistance rating.

22.4.2 Plumbing, piping, ducts, electrical, or other building services shall be installed in accordance with Section 8.8.

22.4.3 Walls shall be continuous from the foundation to the underside of the roof sheathing.

22.4.4 Roof sheathing shall be of one of the following and shall extend for a width not less than 48 in. (1220 mm) on each side of such wall:

(1) Noncombustible material
(2) Fire-retardant-treated wood
(3) One ⅝ in. (16 mm) layer of Type X gypsum wallboard attached to the underside of the roof decking

22.4.5 Each townhouse sharing walls creating separate buildings shall be designed and constructed to maintain its structural integrity independent of the unit on the opposite side of the wall, unless the conditions of 22.4.6 are met.

22.4.6 Walls creating separate buildings shall be permitted to be penetrated by roof and floor structural members, provided that the fire resistance rating and the structural integrity of the wall are maintained.

22.5 Building Services.

22.5.1 Utilities. Utilities shall comply with Chapters 49, 52, and 53.

22.5.2 Heating, Ventilating, and Air-Conditioning. Heating, ventilating, and air-conditioning equipment shall comply with Chapters 50 and 51.

22.5.3 Elevators, Escalators, and Conveyors. Elevators, escalators, and conveyors shall comply with the provisions of Chapter 54.

Chapter 23 Lodging or Rooming House Occupancies

23.1 General Requirements.

23.1.1 Application.

23.1.1.1* This chapter shall apply to buildings that provide sleeping accommodations for a total of 16 or fewer persons on either a transient or permanent basis, with or without meals, but without separate cooking facilities for individual occupants, except as provided in Chapter 22.

23.1.1.2 The requirements of this chapter shall apply to new buildings or portions thereof used as a lodging or rooming house.

23.1.1.3 Repairs, renovations, modifications, additions, and reconstruction of a lodging or rooming house, and changes of use, including change of occupancy classification to a lodging or rooming house, or correction of a damaged or unsafe portion of the building containing the lodging or rooming house, shall comply with one of the following:

(1) Provisions of this chapter
(2) Provisions of Chapter 15

23.1.2 Multiple Occupancies.

23.1.2.1 All multiple occupancies shall be in accordance with Section 6.2 and 23.1.2. Where there are differences in the specific requirements in this chapter and provisions for mixed occupancies or separated occupancies as specified in 6.2.3 and 6.2.4, the requirements of this chapter shall apply. *(See 4.3.2.3.)*

23.1.2.2 No lodging or rooming house shall have its sole means of egress pass through any nonresidential occupancy in the same building, unless otherwise permitted by 23.1.2.2.1 or 23.1.2.2.2.

23.1.2.2.1 In buildings that are protected by an automatic sprinkler system in accordance with Section 55.3, lodging or rooming houses shall be permitted to have their sole means of egress pass through a nonresidential occupancy in the same building where the following conditions are met:

(1) The lodging or rooming house shall comply with Chapter 23.
(2) The sole means of egress from the lodging or rooming house shall not pass through a high hazard contents area as defined in 6.3.2.4.

23.1.2.2.2 In buildings that are not protected by an automatic sprinkler system in accordance with Section 55.3, lodging or rooming houses shall be permitted to have their sole means of egress pass through a nonresidential occupancy in the same building where the following conditions are met:

(1) The sole means of egress from the lodging or rooming house to the exterior shall be separated from the remainder of the building by fire barriers having a fire resistance rating of not less than 1 hour.
(2) The lodging or rooming house shall comply with Chapter 23.

Copyright National Fire Protection Association
Provided by IHS under license with NFPA
No reproduction or networking permitted without license from IHS
Not for Resale

(3) The sole means of egress from the lodging or rooming house shall not pass through a high hazard contents area as defined in 6.3.2.4.

23.1.2.3 Lodging or rooming houses shall be permitted to be located above a nonresidential occupancy only where one of the following conditions exists:

(1) Where the lodging or rooming house and exits therefrom are separated from the nonresidential occupancy by construction having a fire resistance rating of not less than 1 hour
(2) Where the nonresidential occupancy is protected throughout by an approved automatic sprinkler system in accordance with Section 55.3 that is electrically supervised in accordance with 55.3.2
(3) Where a lodging or rooming house is located above a nonresidential occupancy, and the nonresidential occupancy is protected by an automatic fire detection system in accordance with Section 55.2

23.1.3 Classification of Occupancy. Lodging and rooming house occupancies shall be classified in accordance with 6.1.8.1.2.

23.1.4 Classification of Hazard of Contents.

23.1.4.1 Hazard of contents shall be classified in accordance with 6.3.2 and 23.1.4.

23.1.4.2 Buildings or areas in which high hazard contents are stored, used, or handled shall comply with Chapter 34.

23.1.5 Minimum Construction Requirements. Construction shall be in accordance with all of the following:

(1) Chapter 7, Construction Types and Height and Area Requirements
(2) Chapter 8, Fire-Resistive Materials and Construction
(3) Chapter 13, Encroachments into the Public Right-of-Way
(4) Chapter 14, Safeguards During Construction
(5) Chapter 31, Occupancies in Special Structures
(6) Chapter 35, Structural Design
(7) Chapter 36, Soils, Foundations, and Retaining Walls
(8) Chapter 37, Exterior Wall Construction
(9) Chapter 38, Roof Assemblies and Roof Structures
(10) Chapter 39, Flood-Resistant Design and Construction
(11) Chapter 40, Quality Assurance During Construction

23.1.6 Occupant Load. Occupant load shall be determined in accordance with 23.1.1.1.

23.1.7 Accessibility. Accessibility shall be in accordance with Chapter 12.

23.2 Means of Escape Requirements.

23.2.1 Number and Types of Means of Escape.

23.2.1.1 Every sleeping room and living area shall have access to a primary means of escape complying with 22.2.2.2 and located to provide a safe path of travel to the outside.

23.2.1.2 Where sleeping rooms are above or below the level of exit discharge, the primary means of escape shall be an interior stair in accordance with 23.2.2, an exterior stair, or a horizontal exit in accordance with 11.2.4.

23.2.1.3 In addition to the primary route, each sleeping room and living area shall have a secondary means of escape in accordance with 22.2.2.4, unless the sleeping room or living area has a door leading directly outside the building with access to grade or to a stairway that meets the requirements for exterior stairs in 23.2.1.1.

23.2.1.4 In buildings other than those protected throughout by an approved automatic sprinkler system in accordance with 23.3.6 that is electrically supervised in accordance with 55.3.2, every story having an area greater than 2000 ft^2 (185 m^2), or with travel distance to the primary means of escape more than 75 ft (23 m), shall be provided with two primary means of escape remotely located from each other.

23.2.2 Interior Stairways.

23.2.2.1 Interior stairways, other than those in accordance with 23.2.2.3 or 23.2.2.4, shall be enclosed by ½-hour fire barriers, with all openings protected with smoke-actuated automatic-closing or self-closing doors having a fire resistance comparable to that required for the enclosure.

23.2.2.2 Interior stairways shall comply with 11.2.2.5.3.

23.2.2.3 Where an interior stair connects the street floor with the story next above or below only, but not with both, the interior stair shall be required to be enclosed only on the street floor.

23.2.2.4 Stairways shall be permitted to be unenclosed in accordance with the options of 23.3.1.

23.2.3 Doors.

23.2.3.1 Doors in a means of escape, other than bathroom doors in accordance with 23.2.3.2, and paths of travel in a means of escape shall be not less than 28 in. (710 mm) wide.

23.2.3.2 Bathroom doors shall be not less than 24 in. (610 mm) wide.

23.2.3.3 Every closet door latch shall be such that it can be readily opened from the inside in case of emergency.

23.2.3.4 Every bathroom door shall be designed to allow opening from the outside during an emergency when locked.

23.2.3.5 Winders in accordance with 11.2.2.2.4 shall be permitted.

23.2.3.6 Door-locking arrangements shall comply with either 23.2.3.6.1 or 23.2.3.6.2.

23.2.3.6.1* No door in any means of escape shall be locked against egress when the building is occupied.

23.2.3.6.2 Delayed-egress locks complying with 11.2.1.6.1 shall be permitted, provided that not more than one such device is located in any one escape path.

23.2.3.7 Doors serving a single dwelling unit shall be permitted to be provided with a lock in accordance with 11.2.1.5.1.

23.3 Protection.

23.3.1 Protection of Vertical Openings. Vertical openings shall be protected in accordance with 23.3.1.1, 23.3.1.2, or 23.3.1.3.

23.3.1.1 Vertical openings shall meet the following requirements:

(1) Vertical openings shall be protected so that no primary escape route is exposed to an unprotected vertical opening.
(2) Vertical openings shall be considered protected if they are cut off and enclosed in a manner that provides a smoke- and fire-resisting capability of not less than ½ hour.

Copyright National Fire Protection Association
Provided by IHS under license with NFPA
No reproduction or networking permitted without license from IHS
Not for Resale

(3) Any doors or openings shall have a smoke- and fire-resisting capability equivalent to that of the enclosure and shall be automatic-closing on detection of smoke or shall be self-closing.

23.3.1.2 In buildings not more than three stories in height, protected throughout by an approved automatic sprinkler system in accordance with 23.3.6 that is electrically supervised in accordance with 55.3.2, unprotected vertical openings shall be permitted, provided that both of the following criteria are met:

(1) A primary means of escape from each sleeping area meeting 23.3.1.2(2) shall be provided.
(2) The primary means of escape shall not pass through a portion of a lower floor, unless such portion is separated from all spaces on that floor by construction having a ½-hour fire resistance rating.

23.3.1.3 Stair enclosures shall not be required in buildings not more than two stories in height and protected throughout by an approved automatic sprinkler system in accordance with 23.3.6.1 that is electrically supervised in accordance with 55.3.2. The omission of secondary means of escape in accordance with 22.2.2.3(2) shall not be permitted.

23.3.2* Exterior Stairs. Exterior stairs shall be protected against blockage caused by fire within the building.

23.3.3 Interior Finish. Interior finish shall be in accordance with Chapter 10, 23.3.3.1, and 23.3.3.2.

23.3.3.1 Interior Wall and Ceiling Finish. Interior wall and ceiling finish materials shall be Class A, Class B, or Class C in occupied spaces.

23.3.3.2 Interior Floor Finish.

23.3.3.2.1 Interior floor finish shall comply with Section 10.6.

23.3.3.2.2 Interior floor finish shall not be required to be classified as Class I or Class II.

23.3.3.2.3 Interior floor finish shall comply with 10.6.1 or 10.6.2, as applicable.

23.3.4 Detection, Alarm, and Communications Systems.

23.3.4.1 General. Lodging or rooming houses shall be provided with a fire alarm system in accordance with Section 55.2.

23.3.4.2 Initiation. Initiation of the required fire alarm system shall be by manual means in accordance with 55.2.2 or by alarm initiation in accordance with 55.2.2.2 in buildings protected throughout by an approved automatic sprinkler system in accordance with 23.3.6.

23.3.4.3 Notification. Occupant notification shall be provided automatically in accordance with 55.2.3, as modified by 23.3.4.3.1 and 23.3.4.3.2.

23.3.4.3.1* Visible signals for the hearing impaired shall not be required where the proprietor resides in the building and there are five or fewer rooms for rent.

23.3.4.3.2 Positive alarm sequence in accordance with 55.2.3.4 shall be permitted.

23.3.4.4 Detection. (Reserved)

23.3.4.5 Smoke Alarms.

23.3.4.5.1 Smoke alarms shall be installed in every sleeping room in accordance with 55.2.2.6.

23.3.4.5.2 Smoke alarms, as required by 23.3.4.5.1, shall not be required to be interconnected.

23.3.5 Separation of Sleeping Rooms.

23.3.5.1 All sleeping rooms shall be separated from escape route corridors by smoke partitions in accordance with Section 8.10.

23.3.5.2 There shall be no louvers or operable transoms in smoke partitions required by 23.3.5.1.

23.3.5.3 Air passages shall not penetrate the wall, unless they are properly installed heating and utility installations other than transfer grilles.

23.3.5.4 Transfer grilles shall be prohibited.

23.3.5.5 Doors shall be provided with latches or other mechanisms to keep the doors closed.

23.3.5.6 Doors shall not be arranged to prevent the occupant from closing the door.

23.3.5.7 In buildings other than those protected throughout by an approved automatic sprinkler system in accordance with 23.3.6, doors shall be self-closing or automatic-closing upon detection of smoke.

23.3.6 Extinguishment Requirements.

23.3.6.1* Unless otherwise specified in Chapter 7, where modifications are permitted by this *Code*, based on the installation of an automatic sprinkler system, such modifications shall be permitted when the automatic sprinkler system complies with NFPA 13, NFPA 13D, or NFPA 13R.

23.3.6.2* Where an automatic sprinkler system is required or is used as an alternative method of protection, either for total or partial building coverage, the following requirements shall be met:

(1) The system shall be in accordance with Section 55.3 and shall actuate the fire alarm system in accordance with Section 55.2.
(2) In buildings up to and including four stories in height above grade, systems in accordance with NFPA 13R shall be permitted.
(3) The use of automatic sprinkler systems in accordance with NFPA 13D shall be permitted where the lodging or rooming house is not part of a mixed occupancy.
(4) Entrance foyers shall be sprinklered where automatic sprinkler systems in accordance with NFPA 13D are utilized.
(5) Lodging or rooming houses with sleeping accommodations for more than eight occupants shall be treated as two-family dwellings with regard to the water supply where automatic sprinkler systems in accordance with NFPA 13D are utilized.

Exception: In buildings sprinklered in accordance with NFPA 13, closets having an area of less than 12 ft^2 (1.1 m^2) in individual dwelling units shall not be required to be sprinklered. Closets that contain equipment such as washers, dryers, furnaces, or water heaters shall be sprinklered, regardless of size.

23.3.6.3 All lodging or rooming houses, other than those meeting the requirements of 23.3.6.4, shall be protected throughout by an approved automatic sprinkler system in accordance with 23.3.6.

23.3.6.4 In buildings, other than those meeting the requirements of 23.3.6.5, an approved automatic sprinkler system

Copyright National Fire Protection Association
Provided by IHS under license with NFPA
No reproduction or networking permitted without license from IHS
Not for Resale

shall not be required where every sleeping room has a door opening directly to the outside of the building at street or ground level, or has a door opening directly to the outside leading to an exterior stairway that meets the requirements of 23.2.1.1.

23.3.6.5 An approved automatic sprinkler system shall be installed throughout buildings, other than those meeting the requirements of 23.3.6.6, having a floor level located 55 ft (17 m) or more above the lowest level of fire department vehicle access.

23.3.6.6 An automatic sprinkler system shall not be required in buildings where all floors located 55 ft (17 m) or more above the lowest level of fire department vehicle access have an occupant load of less than 30, unless required by another section of this *Code*.

23.3.7 Commercial Cooking Equipment. Commercial cooking equipment shall be protected in accordance with Section 55.10.

23.4 Reserved.

23.5 Building Services.

23.5.1 Utilities. Utilities shall comply with Chapters 49, 52, and 53.

23.5.2 Heating, Ventilating, and Air-Conditioning. Heating, ventilating, and air-conditioning equipment shall comply with Chapters 50 and 51.

23.5.3 Elevators, Escalators, and Conveyors. Elevators, escalators, and conveyors shall comply with the provisions of Chapter 54.

Chapter 24 Hotels and Dormitory Occupancies

24.1 General Requirements.

24.1.1 Application.

24.1.1.1 The requirements of this chapter shall apply to new buildings or portions thereof used as a hotel or dormitory.

24.1.1.2 Repairs, renovations, modifications, additions, and reconstruction of a hotel or dormitory, and changes of use, including change of occupancy classification to a hotel or dormitory, or correction of a damaged or unsafe portion of the building containing the hotel or dormitory, shall comply with one of the following:

(1) Provisions of this chapter
(2) Provisions of Chapter 15

24.1.2 Apartment-Style Dormitories. Any dormitory divided into suites of rooms, with one or more bedrooms opening into a living room or study that has a door opening into a common corridor serving a number of suites, shall be classified as an apartment building.

24.1.3 Multiple Occupancies.

24.1.3.1 All multiple occupancies shall be in accordance with Section 6.2 and 24.1.3. Where there are differences in the specific requirements in this chapter and provisions for mixed occupancies or separated occupancies as specified in 6.2.3 and 6.2.4, the requirements of this chapter shall apply. *(See 4.3.2.3.)*

24.1.3.2 No guest room or guest suite of a hotel or dormitory occupancy shall have its sole means of egress pass through any nonresidential occupancy in the same building, unless otherwise permitted by 24.1.3.2.1 or 24.1.3.2.2.

24.1.3.2.1 In buildings that are protected by an automatic sprinkler system in accordance with Section 55.3, guest rooms and guest suites of hotels and dormitories shall be permitted to have their sole means of egress pass through a nonresidential occupancy in the same building, provided that the following criteria are met:

(1) The hotel or dormitory shall comply with Chapter 24.
(2) The sole means of egress from the guest room or guest suite of the hotel or dormitory shall not pass through a high hazard contents area as defined in 6.3.2.4.

24.1.3.2.2 In buildings that are not protected by an automatic sprinkler system in accordance with Section 55.3, guest rooms and guest suites of hotels and dormitories shall be permitted to have their sole means of egress pass through a nonresidential occupancy in the same building, provided that the following criteria are met:

(1) The sole means of egress from the guest room or guest suite of the hotel or dormitory to the exterior shall be separated from the remainder of the building by fire barriers having a fire resistance rating of not less than 1 hour.
(2) The hotel or dormitory shall comply with Chapter 24.
(3) The sole means of egress from the guest room or guest suite of the hotel or dormitory shall not pass through a high hazard contents area as defined in 6.3.2.4.

24.1.4 Classification of Hazard of Contents.

24.1.4.1 Hazard of contents shall be classified in accordance with 6.3.2 and 24.1.4.

24.1.4.2 Buildings or areas in which high hazard contents are stored, used, or handled shall comply with Chapter 34.

24.1.5 Classification of Occupancy. Hotels and dormitories shall be classified in accordance with 6.1.8.1.3 and 6.1.8.1.4.

24.1.6 Minimum Construction Requirements. Construction shall be in accordance with all of the following:

(1) Chapter 7, Construction Types and Height and Area Requirements
(2) Chapter 8, Fire-Resistive Materials and Construction
(3) Chapter 13, Encroachments into the Public Right-of-Way
(4) Chapter 14, Safeguards During Construction
(5) Chapter 31, Occupancies in Special Structures
(6) Chapter 35, Structural Design
(7) Chapter 36, Soils, Foundations, and Retaining Walls
(8) Chapter 37, Exterior Wall Construction
(9) Chapter 38, Roof Assemblies and Roof Structures
(10) Chapter 39, Flood-Resistant Design and Construction
(11) Chapter 40, Quality Assurance During Construction

24.1.7 Occupant Load. The occupant load, in number of persons for whom means of egress and other provisions are required, shall be determined on the basis of the occupant load factors of Table 11.3.1.2 that are characteristic of the use of the space, or shall be determined as the maximum probable population of the space under consideration, whichever is greater.

24.1.8 Accessibility. Accessibility shall be in accordance with Chapter 12.

Copyright National Fire Protection Association
Provided by IHS under license with NFPA
No reproduction or networking permitted without license from IHS
Not for Resale

24.2 Means of Egress Requirements.

24.2.1 General.

24.2.1.1 Means of egress from guest rooms or guest suites to the outside of the building shall be in accordance with Chapter 11 and this chapter.

24.2.1.2 Means of escape within the guest room or guest suite shall comply with the provisions of Section 22.2 for one- and two-family dwellings.

24.2.1.3 For the purpose of application of the requirements of Section 22.2, the terms *guest room* and *guest suite* shall be synonymous with the terms *dwelling unit* and *living unit*.

24.2.2 Means of Egress Components.

24.2.2.1 General.

24.2.2.1.1 Components of means of egress shall be limited to the types described in 24.2.2.2 through 24.2.2.12.

24.2.2.1.2 In buildings, other than high-rise, protected throughout by an approved, supervised automatic sprinkler system in accordance with 24.3.5, exit enclosures shall have a fire resistance rating of not less than 1 hour, and the fire protection rating of doors shall be not less than 1 hour.

24.2.2.2 Doors.

24.2.2.2.1 Doors complying with 11.2.1 shall be permitted.

24.2.2.2.2 Door-locking arrangements shall comply with 24.2.2.2.2.1, 24.2.2.2.2.2, or 24.2.2.2.2.3.

24.2.2.2.2.1 No door in any means of egress shall be locked against egress when the building is occupied.

24.2.2.2.2.2 Delayed-egress locks complying with 11.2.1.6.1 shall be permitted, provided that not more than one such device is located in any one egress path.

24.2.2.2.2.3 Access-controlled egress doors complying with 11.2.1.6.2 shall be permitted.

24.2.2.2.3 Revolving doors complying with 11.2.1.10 shall be permitted.

24.2.2.2.4 Horizontal-sliding doors, as permitted by 11.2.1.14, shall not be used across corridors.

24.2.2.3 Stairs. Stairs complying with 11.2.2 shall be permitted.

24.2.2.4 Smokeproof Enclosures. Smokeproof enclosures complying with 11.2.3 shall be permitted.

24.2.2.5 Horizontal Exits. Horizontal exits complying with 11.2.4 shall be permitted.

24.2.2.6 Ramps. Ramps complying with 11.2.5 shall be permitted.

24.2.2.7 Exit Passageways. Exit passageways complying with 11.2.6 shall be permitted.

24.2.2.8 Reserved.

24.2.2.9 Reserved.

24.2.2.10 Fire Escape Ladders. Fire escape ladders complying with 11.2.9 shall be permitted.

24.2.2.11 Alternating Tread Devices. Alternating tread devices complying with 11.2.11 shall be permitted.

24.2.2.12 Areas of Refuge.

24.2.2.12.1* Areas of refuge complying with 11.2.12 shall be permitted, as modified by 24.2.2.12.2.

24.2.2.12.2 In buildings protected throughout by an approved, supervised automatic sprinkler system in accordance with 24.3.5, the two accessible rooms or spaces separated from each other by smoke-resistive partitions in accordance with the definition of area of refuge *(see 3.3.34, Area of Refuge)* shall not be required.

24.2.3 Capacity of Means of Egress.

24.2.3.1 The capacity of means of egress shall be in accordance with Section 11.3.

24.2.3.2 Street floor exits shall be sized to accommodate the occupant load of the street floor plus the required capacity of stairs and ramps discharging onto the street floor.

24.2.3.3* Corridors, other than those within individual guest rooms or individual guest suites, shall be of such width so as to accommodate the required occupant load and shall be not less than 44 in. (1120 mm).

24.2.4 Number of Exits.

24.2.4.1 In buildings other than those complying with 24.2.4.2, not less than two separate exits shall be provided on each story. *(See also Section 11.4.)*

24.2.4.2 Buildings of four stories or less protected throughout by an approved, supervised automatic sprinkler system in accordance with 24.3.5, with not more than four guest rooms or guest suites per floor, shall be permitted to have a single exit under the following conditions:

(1) The stairway is completely enclosed or separated by barriers having a fire resistance rating of not less than 1 hour, with self-closing, 1-hour fire protection–rated doors protecting all openings between the stairway enclosure and the building.
(2) The stairway does not serve more than one-half story below the level of exit discharge.
(3) All corridors serving as access to exits have not less than a 1-hour fire resistance rating.
(4) The travel distance from the entrance door of any guest room or guest suite to an exit does not exceed 35 ft (10.7 m).
(5) Horizontal and vertical separation with a fire rating of not less than ½ hour is provided between guest rooms or guest suites.

24.2.5 Arrangement of Means of Egress.

24.2.5.1 Access to all required exits shall be in accordance with Section 11.5, as modified by 24.2.5.2 through 24.2.5.8.

24.2.5.2 The distance between exits addressed by 11.5.1.4.2 shall not apply to common nonlooped exit access corridors in buildings that have corridor doors from the guest room or guest suite that are arranged such that the exits are located in opposite directions from such doors.

24.2.5.3 In buildings not protected throughout by an approved, supervised automatic sprinkler system in accordance with 24.3.5, common paths of travel shall not exceed 35 ft (10.7 m).

24.2.5.4 In buildings protected throughout by an approved, supervised automatic sprinkler system in accordance with 24.3.5, common paths of travel shall not exceed 50 ft (15 m).

Copyright National Fire Protection Association
Provided by IHS under license with NFPA
No reproduction or networking permitted without license from IHS
Not for Resale

24.2.5.5 Travel within a guest room or guest suite shall not be included when determining the length of common path of travel.

24.2.5.6 In buildings not protected throughout by an approved, supervised automatic sprinkler system in accordance with 24.3.5, dead-end corridors shall not exceed 35 ft (10.7 m).

24.2.5.7 In buildings protected throughout by an approved, supervised automatic sprinkler system in accordance with 24.3.5, dead-end corridors shall not exceed 50 ft (15 m).

24.2.5.8 Any guest room or any guest suite of rooms in excess of 2000 ft^2 (185 m^2) shall be provided with not less than two exit access doors remotely located from each other.

24.2.6 Travel Distance to Exits.

24.2.6.1 Travel distance within a guest room or guest suite to a corridor door shall not exceed 75 ft (23 m) in buildings not protected by an approved, supervised automatic sprinkler system in accordance with 24.3.5.

24.2.6.2 Travel distance within a guest room or guest suite to a corridor door shall not exceed 125 ft (38 m) in buildings protected by an approved, supervised automatic sprinkler system in accordance with 24.3.5.

24.2.6.3 Travel distance from the corridor door of any guest room or guest suite to the nearest exit shall comply with 24.2.6.3.1, 24.2.6.3.2, or 24.2.6.3.3.

24.2.6.3.1 Travel distance from the corridor door of any guest room or guest suite to the nearest exit, measured in accordance with Section 11.6, shall not exceed 100 ft (30 m).

24.2.6.3.2 Travel distance from the door of any guest room or guest suite to the nearest exit, measured in accordance with Section 11.6, shall not exceed 200 ft (61 m) for exterior ways of exit access arranged in accordance with 11.5.3.

24.2.6.3.3 Travel distance from the corridor door of any guest room or guest suite to the nearest exit, measured in accordance with Section 11.6, shall meet the following requirements:

(1) Travel distance shall not exceed 200 ft (61 m) where the exit access and any portion of the building that is tributary to the exit access are protected throughout by an approved, supervised automatic sprinkler system in accordance with 24.3.5.
(2) The portion of the building in which the 200 ft (61 m) travel distance is permitted shall be separated from the remainder of the building by construction having a fire resistance rating of not less than 1 hour for buildings not more than three stories in height, and not less than 2 hours for buildings more than three stories in height.

24.2.7 Discharge from Exits.

24.2.7.1 Exit discharge shall comply with Section 11.7.

24.2.7.2* Any required exit stair that is located so that it is necessary to pass through a lobby or other open space to reach the outside of the building shall be continuously enclosed down to a level of exit discharge or to a mezzanine within a lobby at a level of exit discharge.

24.2.7.3 The distance of travel from the termination of the exit enclosure to an exterior door leading to a public way shall not exceed 100 ft (30 m).

24.2.8 Illumination of Means of Egress. Means of egress shall be illuminated in accordance with Section 11.8.

24.2.9 Emergency Lighting. Emergency lighting in accordance with Section 11.9 shall be provided in all buildings with more than 25 rooms, unless each guest room or guest suite has an exit direct to the outside of the building at street or ground level.

24.2.10 Marking of Means of Egress. Means of egress shall have signs in accordance with Section 11.10.

24.2.11 Special Means of Egress Features.

24.2.11.1 Reserved.

24.2.11.2 Lockups. Lockups in hotel and dormitory occupancies shall comply with the requirements of 21.4.5.

24.3 Protection.

24.3.1 Protection of Vertical Openings.

24.3.1.1 Vertical openings shall comply with 24.3.1.1 and 24.3.1.2.

24.3.1.1.1 Vertical openings shall be enclosed or protected in accordance with Section 8.12.

24.3.1.1.2 Vertical openings in accordance with 8.12.4.2 shall be permitted.

24.3.1.1.3 In buildings, other than high-rise buildings, protected throughout by an approved, supervised automatic sprinkler system in accordance with 24.3.5, the fire resistance of walls enclosing vertical openings shall be not less than 1 hour, and the fire protection rating of doors shall be not less than 1 hour.

24.3.1.2 No floor below the level of exit discharge used only for storage, heating equipment, or purposes other than residential occupancy shall have unprotected openings to floors used for residential purposes.

24.3.2 Protection from Hazards.

24.3.2.1 Any room containing high-pressure boilers, refrigerating machinery, transformers, or other service equipment subject to possible explosion shall meet the following requirements:

(1) Such rooms shall not be located directly under, or directly adjacent to, exits.
(2) All such rooms shall be effectively cut off from other parts of the building as specified in Section 8.15.

24.3.2.2 Any hazardous area shall be protected in accordance with Section 8.15.

24.3.2.3 The areas described in Table 24.3.2.3 shall be protected as indicated.

24.3.2.4 Where sprinkler protection without fire-rated separation is used, hazardous areas shall be separated from other spaces by smoke partitions complying with Section 8.10.

24.3.3 Interior Finish.

24.3.3.1 General. Interior finish shall be in accordance with Chapter 10.

24.3.3.2 Interior Wall and Ceiling Finish. Interior wall and ceiling finish materials shall be permitted as follows:

(1) Exit enclosures—Class A
(2) Lobbies and corridors—Class A or Class B
(3) Other spaces—Class A, Class B, or Class C

--`,,```,,,,````-`-`,,`,,`,`,,`---

Copyright National Fire Protection Association
Provided by IHS under license with NFPA
No reproduction or networking permitted without license from IHS
Not for Resale

Table 24.3.2.3 Hazardous Area Protection

Hazardous Area Description	Separation/Protection
Boiler and fuel-fired heater rooms serving more than a single guest room or guest suite	1 hour and sprinklers
Employee locker rooms	1 hour or sprinklers
Gift or retail shops	1 hour or sprinklers
Bulk laundries	1 hour and sprinklers
Guest laundries ≤100 ft^2 (≤9.3 m^2) outside of guest rooms or guest suites	1 hour or sprinklers*
Guest laundries >100 ft^2 (>9.3 m^2) outside of guest rooms or guest suites	1 hour and sprinklers
Maintenance shops	1 hour and sprinklers
Storage rooms †	1 hour or sprinklers
Trash rooms	1 hour and sprinklers

* Where sprinklers are provided, the separation specified in 8.15.2 and 24.3.2.4 is not required.

† Where storage areas not exceeding 24 ft^2 (2.2 m^2) are directly accessible from the guest room or guest suite, no separation or protection is required.

24.3.3.3 Interior Floor Finish.

24.3.3.3.1 Interior floor finish shall comply with Section 10.6.

24.3.3.3.2 Interior floor finish in exit enclosures and in exit access corridors, and in spaces not separated from them by walls complying with 24.3.6, shall be not less than Class II.

24.3.3.3.3 Interior floor finish shall comply with 10.6.1 or 10.6.2, as applicable.

24.3.4 Detection, Alarm, and Communications Systems.

24.3.4.1 A fire alarm system shall be provided in accordance with Section 55.2, as modified by 24.3.4.2 through 24.3.4.9.

24.3.4.2 The required fire alarm system shall be initiated by each of the following:

(1) Manual means in accordance with 55.2.2.1
(2) Manual fire alarm box located at the hotel desk or other convenient central control point under continuous supervision by responsible employees
(3) Automatic sprinkler system
(4) Required automatic detection system(s), other than sleeping room smoke detectors

24.3.4.3* Occupant notification shall meet the following requirements:

(1) Occupant notification shall be provided automatically in accordance with 55.2.3.
(2) Positive alarm sequence in accordance with 55.2.3.4 shall be permitted.

24.3.4.4* Guest rooms and guest suites specifically required and equipped to accommodate hearing-impaired individuals shall be provided with a visible notification appliance.

24.3.4.5 In occupiable areas, other than guest rooms and guest suites, visible notification appliances shall be provided.

24.3.4.6 Annunciation and annunciation zoning in accordance with 55.2.7 and 55.2.8, respectively, shall be provided in buildings exceeding 2 stories in height or having more than 50 guest rooms or guest suites. Annunciation shall be provided at a location readily accessible from the primary point of entry for emergency response personnel.

24.3.4.7* Provisions shall be made for the immediate notification of the public fire department by telephone or other means, unless there is no public fire department, in which case notification shall be made to the private fire brigade.

24.3.4.8 A corridor smoke detection system in accordance with Section 55.2 shall be provided in buildings other than those protected throughout by an approved, supervised automatic sprinkler system in accordance with 24.3.5.

24.3.4.9* Smoke alarms shall be installed in accordance with 55.2.2.6 in every guest room and every living area and sleeping room within a guest suite.

24.3.5 Extinguishment Requirements.

24.3.5.1* Unless otherwise specified in Chapter 7, where modifications are permitted by this *Code*, based on the installation of an automatic sprinkler system, such modifications shall be permitted where the automatic sprinkler system complies with NFPA 13 or NFPA 13R.

24.3.5.2 All buildings, other than those complying with 24.3.5.3, shall be protected throughout by an approved, supervised automatic sprinkler system in accordance with 24.3.5.4.

24.3.5.3 Automatic sprinkler protection shall not be required in buildings where all guest sleeping rooms have a door opening directly to either of the following:

(1) Outside at street or grade level
(2) Exterior exit access arranged in accordance with 11.5.3 in buildings up to and including three stories in height above grade

24.3.5.4 Where an automatic sprinkler system is installed, either for total or partial building coverage, it shall meet the following requirements:

(1) The system shall be in accordance with Section 55.3, as modified by 24.3.5.5.
(2) In buildings up to and including four stories in height above grade, systems in accordance with NFPA 13R shall be permitted.

24.3.5.5 Where an automatic sprinkler system is required by this chapter, it shall be electrically supervised in accordance with 55.3.2.

24.3.5.6 The provisions for draft stops and closely spaced sprinklers in NFPA 13, *Standard for the Installation of Sprinkler Systems*, shall not apply to openings complying with 8.12.4.2 where the opening is within the guest room or guest suite.

24.3.5.7 Listed quick-response or listed residential sprinklers shall be used throughout guest rooms and guest room suites.

24.3.5.8 Open parking structures complying with Section 30.8 that are contiguous with hotels or dormitories shall be exempt from the sprinkler requirements of 24.3.5.2.

24.3.5.9 In buildings other than those protected throughout with an approved, supervised automatic sprinkler system in accordance with 24.3.5, portable fire extinguishers shall be provided as specified in Section 55.6 in hazardous areas addressed by 24.3.2.

24.3.5.10 Standpipes shall comply with the following:

Copyright National Fire Protection Association
Provided by IHS under license with NFPA
No reproduction or networking permitted without license from IHS
Not for Resale

(1) Class I standpipe systems shall be provided where required by 55.4.1.
(2) Roof outlets shall not be required on roofs having slopes of 3 in 12 or greater.

24.3.6 Corridors.

24.3.6.1 Exit access corridor walls shall consist of fire barriers in accordance with Section 8.4 that have not less than a 1-hour fire resistance rating, unless the building complies with 24.3.6.2.

24.3.6.2 In buildings protected throughout by an approved, supervised automatic sprinkler system in accordance with 24.3.5, corridor walls shall have not less than a ½-hour fire resistance rating.

24.3.6.3 Doors that open onto exit access corridors shall have not less than a 20-minute fire protection rating in accordance with 8.7.5 and shall be self-closing and positive-latching.

24.3.6.4 Unprotected openings, other than those from spaces complying with 24.3.6.5, shall be prohibited in exit access corridor walls and doors.

24.3.6.5 Spaces shall be permitted to be unlimited in area and open to the corridor, provided that the following criteria are met:

(1) The spaces are not used for guest rooms or guest suites or hazardous areas.
(2) The building is protected throughout by an approved, supervised automatic sprinkler system in accordance with 24.3.5.
(3) The space does not obstruct access to required exits.

24.3.6.6 Transoms, louvers, or transfer grilles shall be prohibited in walls and doors serving exit access corridors.

24.3.7 Subdivision of Building Spaces. Buildings shall be subdivided in accordance with 24.3.7.1 or 24.3.7.2.

24.3.7.1 In buildings not meeting the requirements of 24.3.7.2, each hotel guest room, including guest suites, and dormitory room shall be separated from other guest rooms or dormitory rooms by walls and floors constructed as fire barriers having fire resistance ratings of not less than 1 hour.

24.3.7.2 In buildings protected throughout by an approved, supervised automatic sprinkler system in accordance with 24.3.5, each hotel guest room, including guest suites, and dormitory room shall be separated from other guest rooms or dormitory rooms by walls and floors constructed as fire barriers having fire resistance ratings of not less than ½ hour.

24.3.8 Special Protection Features. (Reserved)

24.4 Special Provisions.

24.4.1 Limited Access or Underground Buildings. Limited access or underground buildings shall comply with Chapter 31.

24.4.2 High-Rise Buildings. High-rise buildings shall comply with Chapter 33.

24.5 Building Services.

24.5.1 Utilities. Utilities shall comply with Chapters 49, 52, and 53.

24.5.2 Heating, Ventilating, and Air-Conditioning. Heating, ventilating, and air-conditioning equipment shall comply with Chapters 50 and 51, except as otherwise required in this chapter.

24.5.3 Elevators, Escalators, and Conveyors.

24.5.3.1 Elevators, escalators, and conveyors shall comply with Chapter 54.

24.5.3.2* In high-rise buildings, one elevator shall be provided with a protected power supply and shall be available for use by the fire department in case of emergency.

24.5.4 Rubbish Chutes, Incinerators, and Laundry Chutes. Rubbish chutes, incinerators, and laundry chutes shall comply with Section 8.17.

Chapter 25 Apartment Buildings

25.1 General Requirements.

25.1.1 Application.

25.1.1.1 The requirements of this chapter shall apply to new buildings or portions thereof used as an apartment building.

25.1.1.2 Repairs, renovations, modifications, additions, and reconstruction of an apartment building, and changes of use, including change of occupancy classification to an apartment building, or correction of a damaged or unsafe portion of the building containing the apartment building, shall comply with one of the following:

(1) Provisions of this chapter
(2) Provisions of Chapter 15

25.1.1.3 Townhouses shall comply with the following requirements:

(1) Townhouses shall be permitted to be designed in accordance with Chapter 25 where the dwelling units are separated by 1-hour fire resistance–rated construction in accordance with Section 8.4.
(2) Townhouses shall comply with Chapter 22 where property lines exist between units.

25.1.2 Multiple Occupancies.

25.1.2.1 All multiple occupancies shall be in accordance with Section 6.2 and 25.1.2. Where there are differences in the specific requirements in this chapter and provisions for mixed occupancies or separated occupancies as specified in 6.2.3 and 6.2.4, the requirements of this chapter shall apply. *(See 4.3.2.3.)*

25.1.2.2 No dwelling unit of an apartment building shall have its sole means of egress pass through any nonresidential occupancy in the same building, unless otherwise permitted by 25.1.2.2.1 or 25.1.2.2.2.

25.1.2.2.1 In buildings that are protected by an automatic sprinkler system in accordance with Section 55.3, dwelling units of an apartment building shall be permitted to have their sole means of egress pass through a nonresidential occupancy in the same building, provided that the following criteria are met:

(1) The dwelling unit of the apartment building shall comply with Chapter 25.
(2) The sole means of egress from the dwelling unit of the apartment building shall not pass through a high hazard contents area as defined in 6.3.2.4.

25.1.2.2.2 In buildings that are not protected by an automatic sprinkler system in accordance with Section 55.3, dwelling units of an apartment building shall be permitted to have

Copyright National Fire Protection Association
Provided by IHS under license with NFPA
No reproduction or networking permitted without license from IHS
Not for Resale

their sole means of egress pass through a nonresidential occupancy in the same building, provided that the following criteria are met:

(1) The sole means of egress from the dwelling unit of the apartment building to the exterior shall be separated from the remainder of the building by fire barriers having a fire resistance rating of not less than 1 hour.
(2) The dwelling unit of the apartment building shall comply with Chapter 25.
(3) The sole means of egress from the dwelling unit of the apartment building shall not pass through a high hazard contents area as defined in 6.3.2.4.

25.1.2.3 Multiple dwelling units of a residential occupancy shall be permitted to be located above a nonresidential occupancy only where one of the following conditions exists:

(1) Where the dwelling unit of the residential occupancy and exits therefrom are separated from the nonresidential occupancy by construction having a fire resistance rating of not less than 1 hour
(2) Where the nonresidential occupancy is protected throughout by an approved, supervised automatic sprinkler system in accordance with 25.3.5

25.1.3 Classification of Occupancy. Apartment buildings shall be classified in accordance with 6.1.8.1.5.

25.1.4 Classification of Hazard of Contents.

25.1.4.1 Hazard of contents shall be classified in accordance with 6.3.2.

25.1.4.2 Buildings or areas in which high hazard contents are stored, used, or handled shall comply with Chapter 34.

25.1.5 Minimum Construction Requirements. Construction shall be in accordance with all of the following:

(1) Chapter 7, Construction Types and Height and Area Requirements
(2) Chapter 8, Fire-Resistive Materials and Construction
(3) Chapter 13, Encroachments into the Public Right-of-Way
(4) Chapter 14, Safeguards During Construction
(5) Chapter 31, Occupancies in Special Structures
(6) Chapter 35, Structural Design
(7) Chapter 36, Soils, Foundations, and Retaining Walls
(8) Chapter 37, Exterior Wall Construction
(9) Chapter 38, Roof Assemblies and Roof Structures
(10) Chapter 39, Flood-Resistant Design and Construction
(11) Chapter 40, Quality Assurance During Construction

25.1.6 Occupant Load. The occupant load, in number of persons for whom means of egress and other provisions are required, shall be determined on the basis of the occupant load factors of Table 11.3.1.2 that are characteristic of the use of the space, or shall be determined as the maximum probable population of the space under consideration, whichever is greater.

25.1.7 Accessibility. Accessibility shall be in accordance with Chapter 12.

25.2 Means of Egress Requirements.

25.2.1 General.

25.2.1.1 Means of egress from dwelling units to the outside of the building shall be in accordance with Chapter 11 and this chapter.

25.2.1.2 Means of escape within dwelling units shall comply with the provisions of Section 22.2 for one- and two-family dwellings.

25.2.2 Means of Egress Components.

25.2.2.1 General.

25.2.2.1.1 Components of means of egress shall be limited to the types described in 25.2.2.2 through 25.2.2.10.

25.2.2.1.2 In buildings, other than high-rise, protected throughout by an approved, supervised automatic sprinkler system installed in accordance with 25.3.5, exit enclosures shall have a fire resistance rating of not less than 1 hour, with doors having a fire protection rating of not less than 1 hour.

25.2.2.2 Doors.

25.2.2.2.1 Doors complying with 11.2.1 shall be permitted.

25.2.2.2.2 Door-locking arrangements shall comply with 25.2.2.2.2.1, 25.2.2.2.2.2, or 25.2.2.2.2.3.

25.2.2.2.2.1* No door in any means of egress shall be locked against egress when the building is occupied.

25.2.2.2.2.2 Delayed-egress locks complying with 11.2.1.6.1 shall be permitted, provided that not more than one such device is located in any one egress path.

25.2.2.2.2.3 Access-controlled egress doors complying with 11.2.1.6.2 shall be permitted.

25.2.2.2.3 Revolving doors complying with 11.2.1.10 shall be permitted.

25.2.2.2.4 Horizontal-sliding doors, as permitted by 11.2.1.14, shall not be used across corridors.

25.2.2.2.5 Apartment buildings shall be exempt from the reentry provisions of 11.2.1.5.8 where the exit enclosure serves directly only one dwelling unit per floor and such exit is a smokeproof enclosure in accordance with 11.2.3.

25.2.2.3 Stairs.

25.2.2.3.1 Stairs complying with 11.2.2 shall be permitted.

25.2.2.3.2 Spiral stairs complying with 11.2.2.2.3.2 shall be permitted within a single dwelling unit.

25.2.2.3.3 Winders complying with 11.2.2.2.4 shall be permitted within a single dwelling unit.

25.2.2.4 Smokeproof Enclosures. Smokeproof enclosures complying with 11.2.3 shall be permitted.

25.2.2.5 Horizontal Exits. Horizontal exits complying with 11.2.4 shall be permitted.

25.2.2.6 Ramps. Ramps complying with 11.2.5 shall be permitted.

25.2.2.7 Exit Passageways. Exit passageways complying with 11.2.6 shall be permitted.

25.2.2.8 Fire Escape Ladders. Fire escape ladders complying with 11.2.9 shall be permitted.

25.2.2.9 Alternating Tread Devices. Alternating tread devices complying with 11.2.11 shall be permitted.

25.2.2.10 Areas of Refuge.

25.2.2.10.1* Areas of refuge complying with 11.2.12 shall be permitted, as modified by 25.2.2.10.2.

Copyright National Fire Protection Association
Provided by IHS under license with NFPA
No reproduction or networking permitted without license from IHS
Not for Resale

25.2.2.10.2 In buildings protected throughout by an approved, supervised automatic sprinkler system in accordance with 25.3.5, the two accessible rooms or spaces separated from each other by smoke-resistive partitions in accordance with the definition of area of refuge *(see 3.3.34, Area of Refuge)* shall not be required.

25.2.3 Capacity of Means of Egress.

25.2.3.1 The capacity of means of egress shall be in accordance with Section 11.3.

25.2.3.2 Street floor exits shall be sized to accommodate the occupant load of the street floor plus the required capacity of stairs and ramps discharging onto the street floor.

25.2.3.3 Corridors with a required capacity of more than 50 persons, as specified in Section 11.3, shall be of such width as to accommodate the required occupant load but shall have a width of not less than 44 in. (1120 mm).

25.2.3.4 Corridors with a required capacity of not more than 50 persons as specified in Section 11.3 shall have a width of not less than 36 in. (915 mm).

25.2.4 Number of Exits. The minimum number of exits shall comply with 25.2.4.1, 25.2.4.2, or 25.2.4.3. *(See also Section 11.4.)*

25.2.4.1 Every dwelling unit shall have access to at least two separate exits remotely located from each other as required by 11.5.1.

25.2.4.2 Any dwelling unit shall be permitted to have a single exit, provided that one of the following conditions exists:

(1) The dwelling unit has an exit door opening directly to the street or yard at ground level.
(2) The dwelling unit has direct access to an outside stair complying with 11.2.2.7 that serves a maximum of two units, both of which are located on the same floor.
(3) The dwelling unit has direct access to an interior stair serving only that unit and separated from all other portions of the building by fire barriers having a minimum 1-hour fire resistance rating with no opening therein.

25.2.4.3 Any building protected throughout by an approved, supervised automatic sprinkler system installed in accordance with 25.3.5 having four or fewer stories, and with not more than four dwelling units per story, shall be permitted to have a single exit under the following conditions:

(1) The stairway is separated from the rest of the building by barriers having not less than a 1-hour fire resistance rating with self-closing doors having not less than a 1-hour fire protection rating protecting all openings between the stairway enclosure and the building.
(2) The stairway does not serve more than one-half story below the level of exit discharge.
(3) All corridors serving as access to exits have not less than a 1-hour fire resistance rating.
(4) There is not more than 35 ft (10.7 m) of travel distance from the entrance door of any dwelling unit to an exit.
(5) One-half-hour fire-rated horizontal and vertical separation between dwelling units is provided.

25.2.5 Arrangement of Means of Egress.

25.2.5.1 Access to all required exits shall be in accordance with Section 11.5, as modified by 25.2.5.2 through 25.2.5.4.

25.2.5.2 The distance between exits addressed by 11.5.1.4.2 shall not apply to common nonlooped exit access corridors in buildings that have corridor doors from the dwelling units that are arranged such that the exits are located in opposite directions from such doors.

25.2.5.3 Common paths of travel shall comply with 25.2.5.3.1 or 25.2.5.3.2.

25.2.5.3.1 No common path of travel shall exceed 35 ft (10.7 m) in buildings not protected throughout by an approved, supervised automatic sprinkler system installed in accordance with 25.3.5.

25.2.5.3.2 No common path of travel shall exceed 50 ft (15 m) in buildings protected throughout by an approved, supervised automatic sprinkler system installed in accordance with 25.3.5.

25.2.5.3.3 Travel within a dwelling unit shall not be included when determining the length of common path of travel.

25.2.5.4 Dead-end corridors shall be limited in accordance with either 25.2.5.4.1 or 25.2.5.4.2.

25.2.5.4.1 Dead-end corridors shall not exceed 35 ft (10.7 m) in buildings not protected throughout by an approved, supervised automatic sprinkler system in accordance with 25.3.5.

25.2.5.4.2 Dead-end corridors shall not exceed 50 ft (15 m) in buildings protected throughout by an approved, supervised automatic sprinkler system in accordance with 25.3.5.

25.2.6 Travel Distance to Exits.

25.2.6.1 Travel distance within a dwelling unit (apartment) to a corridor door shall not exceed 75 ft (23 m) in buildings not protected throughout by an approved, supervised automatic sprinkler system installed in accordance with 25.3.5.

25.2.6.2 Travel distance within a dwelling unit (apartment) to a corridor door shall not exceed 125 ft (38 m) in buildings protected throughout by an approved, supervised automatic sprinkler system installed in accordance with 25.3.5.

25.2.6.3 The travel distance from a dwelling unit (apartment) entrance door to the nearest exit shall be limited in accordance with 25.2.6.3.1, 25.2.6.3.2, or 25.2.6.3.3.

25.2.6.3.1 The travel distance from a dwelling unit (apartment) entrance door to the nearest exit shall not exceed 100 ft (30 m).

25.2.6.3.2 In buildings protected throughout by an approved, supervised automatic sprinkler system installed in accordance with 25.3.5, the travel distance from a dwelling unit (apartment) entrance door to the nearest exit shall not exceed 200 ft (61 m).

25.2.6.3.3 The travel distance from a dwelling unit (apartment) entrance door to the nearest exit shall not exceed 200 ft (61 m) for exterior ways of exit access arranged in accordance with 11.5.3.

25.2.6.4 The travel distance from areas, other than those within living units, to the exit, measured in accordance with Section 11.6, shall not exceed 200 ft (61 m), or 250 ft (76 m) in buildings protected throughout by an approved, supervised, automatic sprinkler system installed in accordance with Section 55.3.

25.2.7 Discharge from Exits. Exit discharge shall comply with Section 11.7.

Copyright National Fire Protection Association
Provided by IHS under license with NFPA
No reproduction or networking permitted without license from IHS
Not for Resale

25.2.8 Illumination of Means of Egress. Means of egress shall be illuminated in accordance with Section 11.8.

25.2.9 Emergency Lighting. Emergency lighting in accordance with Section 11.9 shall be provided in all buildings with more than 12 dwelling units or buildings of more than three stories in height, unless every dwelling unit has a direct exit to the outside of the building at grade level.

25.2.10 Marking of Means of Egress. Means of egress shall have signs in accordance with Section 11.10 in all buildings requiring more than one exit.

25.2.11 Special Means of Egress Features.

25.2.11.1 Reserved.

25.2.11.2 Lockups. Lockups in apartment occupancies shall comply with the requirements of 21.4.5.

25.3 Protection.

25.3.1 Protection of Vertical Openings.

25.3.1.1 Vertical openings shall comply with 25.3.1.1 through 25.3.1.3.

25.3.1.1.1 Vertical openings shall be enclosed or protected in accordance with Section 8.12.

25.3.1.1.2 Where the provisions of 8.12.2 are used, the requirements of 25.3.5.10 shall be met.

25.3.1.1.3 Vertical openings in accordance with 8.12.4.2 shall be permitted.

25.3.1.1.4 In buildings, other than high-rise buildings, protected throughout by an approved, supervised automatic sprinkler system in accordance with 25.3.5, the fire resistance of walls enclosing vertical openings shall be not less than 1 hour, and the fire protection rating of doors shall be not less than 1 hour.

25.3.1.2 No floor below the level of exit discharge used only for storage, heating equipment, or purposes other than residential occupancy open to the public shall have unprotected openings to floors used for residential purposes.

25.3.1.3 Within any individual dwelling unit, unless protected by an approved automatic sprinkler system in accordance with 25.3.5, vertical openings more than one story above or below the entrance floor level of the dwelling unit shall not be permitted.

25.3.2 Protection from Hazards.

25.3.2.1 Hazardous areas shall be protected in accordance with Section 8.15.

25.3.2.2 The areas described in Table 25.3.2.2 shall be protected as indicated.

25.3.2.3 Where sprinkler protection without fire-rated separation is used, areas shall be separated from other spaces by smoke partitions complying with Section 8.10.

25.3.3 Interior Finish.

25.3.3.1 General. Interior finish shall be in accordance with Chapter 10.

25.3.3.2 Interior Wall and Ceiling Finish. Interior wall and ceiling finish materials shall be permitted as follows:

(1) Exit enclosures—Class A
(2) Lobbies and corridors—Class A or Class B
(3) Other spaces—Class A, Class B, or Class C

Table 25.3.2.2 Hazardous Area Protection

Hazardous Area Description	Separation/Protection
Boiler and fuel-fired heater rooms serving more than a single dwelling unit	1 hour and sprinklers
Employee locker rooms	1 hour or sprinklers
Gift or retail shops	1 hour or sprinklers
Bulk laundries	1 hour and sprinklers
Laundries ≤100 ft^2 (≤9.3 m^2) outside of dwelling units	1 hour or sprinklers*
Laundries >100 ft^2 (>9.3 m^2) outside of dwelling units	1 hour and sprinklers
Maintenance shops	1 hour and sprinklers
Storage rooms outside of dwelling units	1 hour or sprinklers
Trash rooms	1 hour and sprinklers

*Where sprinklers are provided, the separation specified in 8.15.2 and 25.3.2.3 is not required.

25.3.3.3 Interior Floor Finish.

25.3.3.3.1 Interior floor finish shall comply with Section 10.6.

25.3.3.3.2 Interior floor finish in exit enclosures and in exit access corridors, and in spaces not separated from them by walls complying with 25.3.6, shall be not less than Class II.

25.3.3.3.3 Interior floor finish shall comply with 10.6.1 or 10.6.2, as applicable.

25.3.4 Detection, Alarm, and Communications Systems.

25.3.4.1 General. Apartment buildings with more than 3 stories or with more than 11 dwelling units, other than those meeting the requirements of 25.3.4.1.1 or 25.3.4.1.2, shall be provided with a fire alarm system in accordance with Section 55.2, as modified by 25.3.4.2 through 25.3.4.4.

25.3.4.1.1 A fire alarm system shall not be required where each dwelling unit is separated from other contiguous dwelling units by fire barriers *(see Section 8.4)* having a fire resistance rating of not less than 1 hour, and where each dwelling unit has either its own independent exit or its own independent stairway or ramp discharging at grade.

25.3.4.1.2 A fire alarm system shall not be required in buildings of not more than 4 stories that are protected throughout by an approved automatic sprinkler system installed in accordance with 25.3.5 and that do not contain more than 16 dwelling units.

25.3.4.1.3 A fire alarm system shall not be required in buildings protected by an approved, electrically supervised automatic sprinkler system installed in accordance with 25.3.5, provided that the dwelling units meet one of the following criteria:

(1) They are provided with a means of egress door opening directly to an exterior exit access in accordance with 11.5.3.
(2) They are served by corridors that are open on each end and that connect to outside stairs.

25.3.4.2 Initiation.

25.3.4.2.1 Initiation of the required fire alarm system shall be by manual means in accordance with 55.2.2.1.

Copyright National Fire Protection Association
Provided by IHS under license with NFPA
No reproduction or networking permitted without license from IHS
Not for Resale

25.3.4.2.2 In buildings protected throughout by an approved, supervised automatic sprinkler system installed in accordance with 25.3.5, required fire alarm systems shall be initiated upon operation of the automatic sprinkler system.

25.3.4.3 Notification.

25.3.4.3.1 Occupant notification shall comply with the following requirements:

(1) Occupant notification shall be provided automatically in accordance with 55.2.3.
(2) Visible signals shall be installed in units designed for the hearing impaired.
(3) Positive alarm sequence in accordance with 55.2.3.4 shall be permitted.

25.3.4.3.2 Annunciation and annunciation zoning in accordance with 55.2.7 and 55.2.8, respectively, shall be provided in buildings exceeding 2 stories in height or having more than 50 dwelling units. Annunciation shall be provided at a location readily accessible from the primary point of entry for emergency response personnel.

25.3.4.4 Detection. (Reserved)

25.3.4.5 Smoke Alarms.

25.3.4.5.1* Smoke alarms shall be installed in accordance with 55.2.2.6 outside every sleeping area in the immediate vicinity of the bedrooms and on all levels of the dwelling unit, including basements.

25.3.4.5.2 In buildings other than those protected throughout by an approved, supervised automatic sprinkler system installed in accordance with 25.3.5, smoke alarms shall be installed in every sleeping room in accordance with 55.2.2.6.

25.3.5 Extinguishment Requirements.

25.3.5.1* Unless otherwise specified in Chapter 7, where modifications are permitted by this *Code,* based on the installation of an automatic sprinkler system, such modifications shall be permitted where the automatic sprinkler system complies with NFPA 13, *Standard for the Installation of Sprinkler Systems*, or NFPA 13R, *Standard for the Installation of Sprinkler Systems in Residential Occupancies up to and Including Four Stories in Height.*

25.3.5.2 All buildings, other than those complying with 25.3.5.3, shall be protected throughout by an approved, supervised automatic sprinkler system installed in accordance with 25.3.5.4.

25.3.5.3 Sprinkler systems shall not be required in buildings where every dwelling unit is provided with one of the following:

(1) Exit door opening directly to the street or yard at ground level
(2) Direct access to an outside stair complying with 11.2.2.7 that serves a maximum of two units, both of which are located on the same floor
(3) Direct access to an interior stair serving only that unit and separated from all other portions of the building by fire barriers having a 1-hour fire resistance rating with no openings therein

25.3.5.4 Where an automatic sprinkler system is installed, either for total or partial building coverage, the following requirements shall apply:

(1) The system shall be installed in accordance with Section 55.3, as modified by 25.3.5.5 through 25.3.5.8.
(2) In buildings up to and including four stories in height above grade, systems in accordance with NFPA 13R shall be permitted.

25.3.5.5 In buildings sprinklered in accordance with NFPA 13, closets shall meet the following requirements:

(1) Closets of less than 12 ft^2 (1.1 m^2) in individual dwelling units shall not be required to be sprinklered.
(2) Closets that contain equipment such as washers, dryers, furnaces, or water heaters shall be sprinklered, regardless of size.

25.3.5.6 Where an automatic sprinkler system is required by this chapter, it shall be electrically supervised in accordance with 55.3.2.

25.3.5.7 The draft stop and closely spaced sprinkler requirements of NFPA 13, *Standard for the Installation of Sprinkler Systems*, shall not be required for convenience openings complying with 8.12.4.2 where the convenience opening is within the dwelling unit.

25.3.5.8 Listed quick-response or listed residential sprinklers shall be used throughout all dwelling units.

25.3.5.9 Open parking structures complying with Section 30.8 that are contiguous with apartment buildings shall be exempt from the sprinkler requirements of 25.3.5.2.

25.3.5.10 Buildings with unprotected openings in accordance with 8.12.2 shall be protected throughout by an approved, supervised automatic sprinkler system in accordance with 25.3.5.

25.3.5.11 Portable fire extinguishers in accordance with Section 55.6 shall be provided in hazardous areas addressed by 25.3.2, unless the building is protected throughout by an approved, supervised automatic sprinkler system in accordance with 25.3.5.

25.3.5.12 Standpipes shall comply with the following:

(1) Class I standpipe systems shall be provided where required by 55.4.1.
(2) Roof outlets shall not be required on roofs having slopes of 3 in 12 or greater.

25.3.6 Corridors.

25.3.6.1 Exit access corridor walls shall consist of fire barriers in accordance with Section 8.4 that have not less than a 1-hour fire resistance rating, or, in buildings protected throughout by an approved, supervised automatic sprinkler system in accordance with 25.3.5, corridor walls shall have not less than a ½-hour fire resistance rating.

25.3.6.2 Doors that open onto exit access corridors shall have a minimum 20-minute fire protection rating in accordance with 8.7.5.

25.3.6.3 Doors that open onto exit access corridors shall be self-closing and positive-latching.

25.3.6.4 Unprotected openings, other than those from spaces complying with 25.3.6.5, shall be prohibited in exit access corridor walls and doors.

25.3.6.5 Spaces, other than dwelling units, shall be permitted to be unlimited in area and open to the corridor, provided that the following criteria are met:

--`,,```,,,,````-`-`,,`,,`,`,,`---
Copyright National Fire Protection Association
Provided by IHS under license with NFPA
No reproduction or networking permitted without license from IHS
Not for Resale

(1) The space is not a hazardous area.
(2) The building is protected throughout by an approved, supervised automatic sprinkler system in accordance with 25.3.5.
(3) The space does not obstruct access to required exits.

25.3.6.6 Transoms, louvers, or transfer grilles shall be prohibited in walls or doors of exit access corridors.

25.3.7 Subdivision of Building Spaces. Buildings shall be subdivided in accordance with 25.3.7.1 or 25.3.7.2.

25.3.7.1 Where buildings do not meet the requirements of 25.3.7.2, dwelling units shall be separated from each other by walls and floors constructed as fire barriers having fire resistance ratings of not less than 1 hour.

25.3.7.2 In buildings protected throughout by an approved, electrically supervised automatic sprinkler system in accordance with 25.3.5, dwelling units shall be separated from each other by walls and floors constructed as fire barriers having fire resistance ratings of not less than ½ hour.

25.3.8 Special Protection Features. (Reserved)

25.3.9 Commercial Cooking Equipment. Commercial cooking equipment shall be protected in accordance with Section 55.10.

25.4 Special Provisions.

25.4.1 Limited Access or Underground Buildings. Limited access or underground buildings shall comply with Chapter 31.

25.4.2 High-Rise Buildings.

25.4.2.1 High-rise buildings shall comply with Chapter 33.

25.4.2.2 The sprinkler system modifications in 25.3.5.5 and 25.3.5.7 shall be permitted.

25.5 Building Services.

25.5.1 Utilities. Utilities shall comply with Chapters 49, 52, and 53.

25.5.2 Heating, Ventilating, and Air-Conditioning. Heating, ventilating, and air-conditioning equipment shall comply with Chapters 50 and 51.

25.5.3 Elevators, Escalators, and Conveyors. Elevators, escalators, and conveyors shall comply with Chapter 54.

25.5.4 Rubbish Chutes, Incinerators, and Laundry Chutes. Rubbish chutes, incinerators, and laundry chutes shall comply with Section 8.17.

Chapter 26 Residential Board and Care Occupancies

26.1 General Requirements.

26.1.1 Application.

26.1.1.1* The requirements of this chapter shall apply to new buildings or portions thereof used as a residential board and care occupancy.

26.1.1.2 Repairs, renovations, modifications, additions, and reconstruction of a residential board and care occupancy, and changes of use, including change of occupancy classification to a residential board and care occupancy, or correction of a damaged or unsafe portion of the building containing the residential board and care occupancy, shall comply with one of the following:

(1) Provisions of this chapter
(2) Provisions of Chapter 15

26.1.2 Multiple Occupancies.

26.1.2.1 All multiple occupancies shall be in accordance with Section 6.2 and 26.1.2. Where there are differences in the specific requirements in this chapter and provisions for mixed occupancies or separated occupancies as specified in 6.2.3 and 6.2.4, the requirements of this chapter shall apply. *(See 4.3.2.3.)*

26.1.2.2 No board and care occupancy shall have its sole means of egress or means of escape pass through any nonresidential or non-health-care occupancy in the same building.

26.1.2.3 No board and care occupancy shall be located above a nonresidential or non-health-care occupancy, unless such board and care occupancy and exits therefrom are separated from the nonresidential or non-health-care occupancy by construction having a fire resistance rating of not less than 2 hours.

26.1.3 Acceptability of Means of Egress or Escape. No means of escape or means of egress shall be considered as complying with the minimum criteria for acceptance, unless emergency evacuation drills are regularly conducted using such route.

26.1.4 Classification of Hazard of Contents.

26.1.4.1 Hazard of contents shall be classified in accordance with 6.3.2.

26.1.4.2 Buildings or areas in which high hazard contents are stored, used, or handled shall comply with Chapter 34.

26.1.5* Fire- and Smoke-Resistant Construction. Construction required by this chapter to have a fire resistance rating or provisions for limiting the migration of smoke shall be in accordance with Chapter 8.

26.2 Small Facilities.

26.2.1 General.

26.2.1.1 Scope.

26.2.1.1.1 Section 26.2 shall apply to residential board and care occupancies providing sleeping accommodations for not more than 16 residents.

26.2.1.1.2 Where there are sleeping accommodations for more than 16 residents, the occupancy shall be classified as a large facility in accordance with Section 26.3.

26.2.1.2 Minimum Construction Requirements. Building construction shall be in accordance with all of the following:

(1) Chapter 7, Construction Types and Height and Area Requirements
(2) Chapter 8, Fire-Resistive Materials and Construction
(3) Chapter 13, Encroachments into the Public Right-of-Way
(4) Chapter 14, Safeguards During Construction
(5) Chapter 31, Occupancies in Special Structures
(6) Chapter 35, Structural Design
(7) Chapter 36, Soils, Foundations, and Retaining Walls
(8) Chapter 37, Exterior Wall Construction
(9) Chapter 38, Roof Assemblies and Roof Structures
(10) Chapter 39, Flood-Resistant Design and Construction
(11) Chapter 40, Quality Assurance During Construction

26.2.1.3 Accessibility. Accessibility shall be in accordance with Chapter 12.

Copyright National Fire Protection Association
Provided by IHS under license with NFPA
No reproduction or networking permitted without license from IHS
Not for Resale

26.2.2 Means of Escape.

26.2.2.1 Primary Means of Escape.

26.2.2.1.1 Every sleeping room and living area shall have access to a primary means of escape located to provide a safe path of travel to the outside.

26.2.2.1.2 Where sleeping rooms or living areas are above or below the level of exit discharge, the primary means of escape shall be an interior stair in accordance with 26.2.2.3, an exterior stair, a horizontal exit, or a fire escape stair.

26.2.2.2 Secondary Means of Escape. Sleeping rooms and living areas in facilities without a sprinkler system installed in accordance with 26.2.3.5 shall have a second means of escape consisting of one of the following:

(1) Door, stairway, passage, or hall providing a way of unobstructed travel to the outside of the dwelling at street or ground level that is independent of, and remotely located from, the primary means of escape
(2) Passage through an adjacent, nonlockable space, independent of and remotely located from the primary means of escape, to any approved means of escape
(3)*Outside window or door that is operable from the inside, without the use of tools, keys, or special effort, and that provides a clear opening of not less than 5.7 ft^2 (0.53 m^2), with the width not less than 20 in. (510 mm), the height not less than 24 in. (610 mm), and the bottom of the opening not more than 44 in. (1120 mm) above the floor, where one of the following criteria also is met:
   (a) The window is within 20 ft (6100 mm) of grade.
   (b) The window is directly accessible to fire department rescue apparatus, as approved by the authority having jurisdiction.
   (c) The window or door opens onto an exterior balcony.
(4) Window having a sill height below the adjacent ground level that is provided with a window well meeting the following criteria:
   (a) The window well has horizontal dimensions that allow the window to be fully opened.
   (b) The window well has an accessible net clear opening of not less than 9 ft^2 (0.82 m^2), with a length and width of not less than 36 in. (915 mm).
   (c) Where a window well has a vertical depth of more than 44 in. (1120 mm), it is to be equipped with an approved, permanently affixed ladder or with steps meeting the following criteria:
      i. The ladder or steps do not encroach more than 6 in. (150 mm) into the required dimensions of the window well.
      ii. The ladder or steps are not obstructed by the window.
      iii. Ladders or steps that comply with the requirements of 22.2.2.4.3.2(4)(c)(i) and (ii) are exempt from the requirements of 11.2.2.

Exception: If the sleeping room has a door leading directly to the outside of the building, with access to grade or to an exterior stairway meeting the requirements of 26.2.2.5.2, that means of escape shall be considered as meeting all the escape requirements for the sleeping room.

26.2.2.3 Interior Stairs Used for Primary Means of Escape. Interior stairs shall be protected in accordance with 26.2.2.3.1 through 26.2.2.3.4, unless they meet the requirements of 26.2.2.3.5, 26.2.2.3.6, or 26.2.2.3.7.

26.2.2.3.1 Interior stairs shall be enclosed with ½-hour fire barriers, with all openings equipped with smoke-actuated, automatic-closing or self-closing doors having a fire protection rating comparable to that required for the enclosure.

26.2.2.3.2 Stairs shall comply with 11.2.2.5.3.

26.2.2.3.3 The entire primary means of escape shall be arranged so that occupants are not required to pass through a portion of a lower story, unless that route is separated from all spaces on that story by construction having a minimum ½-hour fire resistance rating.

26.2.2.3.4 In buildings of construction other than Type II(000), Type III(200), or Type V(000), the supporting construction shall be protected to afford the required fire resistance rating of the supported wall.

26.2.2.3.5 Stairs that connect a story at street level to only one other story shall be permitted to be open to the story that is not at street level.

26.2.2.3.6 In buildings not exceeding three stories in height that are protected by an approved automatic sprinkler system in accordance with 26.2.3.5, stair enclosures shall not be required, provided that a primary means of escape from each sleeping area is maintained that does not require occupants to pass through a portion of a lower floor, unless that route is separated from all spaces on that floor by construction having a ½-hour fire resistance rating.

26.2.2.3.7 Stairs serving a maximum of two stories in buildings protected by an approved automatic sprinkler system in accordance with 26.2.3.5 shall not be required to be enclosed.

26.2.2.4 Doors.

26.2.2.4.1 Doors, other than those meeting the requirement of 26.2.2.4.2, and paths of travel to a means of escape shall be at least 32 in. (810 mm) wide.

26.2.2.4.2 Bathroom doors shall be at least 24 in. (610 mm) wide.

26.2.2.4.3 Doors shall be swinging or sliding.

26.2.2.4.4 Every closet door latch shall be readily openable from the inside.

26.2.2.4.5 Every bathroom door shall be designed to allow opening from the outside during an emergency when locked.

26.2.2.4.6 No door in any means of escape, other than those meeting the requirements of 26.2.2.4.6.1 or 26.2.2.4.6.2, shall be locked against egress when the building is occupied.

26.2.2.4.6.1 Delayed-egress locks complying with 11.2.1.6.1 shall be permitted, provided that not more than one such device is located in any escape path.

26.2.2.4.6.2 Access-controlled egress doors complying with 11.2.1.6.2 shall be permitted.

26.2.2.4.7 Forces to open doors shall comply with 11.2.1.4.4.

26.2.2.4.8 Door-latching devices shall comply with 11.2.1.5.10.

26.2.2.5 Stairs.

26.2.2.5.1 Stairs shall comply with 11.2.2.

26.2.2.5.2* Exterior stairs shall be protected against blockage caused by fire within the building.

Copyright National Fire Protection Association
Provided by IHS under license with NFPA
No reproduction or networking permitted without license from IHS
Not for Resale

26.2.3 Protection.

26.2.3.1 Protection of Vertical Openings.

26.2.3.1.1 Vertical openings, other than those meeting the requirement of 26.2.3.1.4, shall be separated by smoke partitions in accordance with Section 8.10 that resist the passage of smoke from one story to another story.

26.2.3.1.2 Smoke partitions described in 26.2.3.1.1 shall have a fire resistance rating of not less than ½ hour.

26.2.3.1.3 Any doors or openings to the vertical opening shall be capable of resisting fire for not less than 20 minutes.

26.2.3.1.4 Stairs shall be permitted to be open where complying with 26.2.2.3.6 or 26.2.2.3.7.

26.2.3.2 Hazardous Areas.

26.2.3.2.1* Any space where there is storage or activity having fuel conditions exceeding that of a one- or two-family dwelling and that possesses the potential for a fully involved fire shall be protected in accordance with 26.2.3.2.2 and 26.2.3.2.3.

26.2.3.2.2 Spaces described in 26.2.3.2.1 shall include, but shall not be limited to, areas for cartoned storage, food or household maintenance items in wholesale or institutional-type quantities and concentrations, or mass storage of residents' belongings.

26.2.3.2.3 When the hazardous area is on the same floor as, and is located within or abuts, a primary means of escape or a sleeping room, it shall be protected by one of the following means:

(1) Enclosure with a fire resistance rating of not less than 1 hour with a self-closing or automatic-closing fire door in accordance with 11.2.1.8 having a fire protection rating of at least ¾ hour and protected by an automatic fire detection system connected to the fire alarm system required by 26.2.3.4.1
(2) Automatic sprinkler system, in accordance with 26.2.3.5, and a smoke partition, in accordance with Section 8.10, located between the space and the sleeping area or primary escape route, provided that any doors in such separation are self-closing or automatic-closing in accordance with 11.2.1.8

26.2.3.2.4 Other hazardous areas shall be protected by one of the following:

(1) Enclosure having a fire resistance rating of at least ½ hour, with a self-closing or automatic-closing door in accordance with 11.2.1.8, equivalent to at least a 1¾ in. (44 mm) thick, solid-bonded wood core construction and protected by an automatic fire detection system connected to the fire alarm system required by 26.2.3.4.1
(2) Automatic sprinkler protection in accordance with 26.2.3.5, regardless of enclosure

26.2.3.3 Interior Finish.

26.2.3.3.1 General. Interior finish shall be in accordance with Chapter 10.

26.2.3.3.2 Interior Wall and Ceiling Finish. Interior wall and ceiling finish materials shall be Class A, Class B, or Class C.

26.2.3.3.3 Interior Floor Finish.

26.2.3.3.3.1 Interior floor finish shall comply with Section 10.6.

26.2.3.3.3.2 Interior floor finish shall not be required to be classified as Class I or Class II.

26.2.3.3.3.3 Interior floor finish shall comply with 10.6.1 or 10.6.2, as applicable.

26.2.3.4 Detection, Alarm, and Communications Systems.

26.2.3.4.1 A manual fire alarm system shall be provided in accordance with Section 55.2.

26.2.3.4.2 Occupant notification shall be provided automatically, without delay, in accordance with 55.2.3.

26.2.3.4.3 Smoke alarms shall meet the following requirements:

(1) Approved smoke alarms shall be provided in accordance with 55.2.2.6 on all levels, including basements, but excluding crawl spaces and unfinished attics.
(2) Additional smoke alarms shall be installed in all living areas. *(See 3.3.33.11, Living Area.)*
(3) Each sleeping room shall be provided with an approved smoke alarm in accordance with 55.2.2.6.

26.2.3.5 Extinguishment Requirements.

26.2.3.5.1* All facilities shall be protected throughout by an approved automatic sprinkler system installed in accordance with 26.2.3.5.2 using quick-response or residential sprinklers.

26.2.3.5.2 Where an automatic sprinkler system is installed, for either total or partial building coverage, the following requirements shall be met:

(1) The system shall be in accordance with NFPA 13, *Standard for the Installation of Sprinkler Systems*, and shall initiate the fire alarm system in accordance with 26.2.3.4.1.
(2) The adequacy of the water supply shall be documented to the authority having jurisdiction.

26.2.3.5.2.1 An automatic sprinkler system in accordance with NFPA 13R, *Standard for the Installation of Sprinkler Systems in Residential Occupancies up to and Including Four Stories in Height*, shall be permitted in facilities up to and including four stories in height. All habitable areas and closets shall be sprinklered.

26.2.3.5.2.2* An automatic sprinkler system complying with NFPA 13D, *Standard for the Installation of Sprinkler Systems in One- and Two-Family Dwellings and Manufactured Homes*, with a 30-minute water supply, shall be permitted. All habitable areas and closets shall be sprinklered. Facilities with more than eight residents shall be treated as two-family dwellings with regard to water supply.

26.2.3.5.3 Automatic sprinkler systems installed in accordance with NFPA 13 and NFPA 13R shall be provided with electrical supervision in accordance with 55.3.2.

26.2.3.5.4 Automatic sprinkler systems installed in accordance with NFPA 13D shall be provided with valve supervision by one of the following methods:

(1) Single, listed control valve that shuts off both domestic and sprinkler systems, and separate shutoff for the domestic system only
(2) Electrical supervision in accordance with 55.3.2
(3) Valve closure that causes the sounding of an audible signal in the facility

26.2.3.5.5 Sprinkler piping serving not more than six sprinklers for any isolated hazardous area shall be permitted to be

Copyright National Fire Protection Association
Provided by IHS under license with NFPA
No reproduction or networking permitted without license from IHS
Not for Resale

installed in accordance with 55.3.1.2 and shall meet the following requirements:

(1) In new installations, where more than two sprinklers are installed in a single area, waterflow detection shall be provided to initiate the fire alarm system required by 26.2.3.4.1.
(2) The duration of water supplies shall be as required by 26.2.3.5.2.

26.2.3.6 Construction of Corridor Walls.

26.2.3.6.1 Corridor walls, other than those meeting the requirements of 26.2.3.6.2, shall meet the following criteria:

(1) The separation walls of sleeping rooms shall be capable of resisting fire for at least ½ hour, which is considered to be achieved if the partitioning is finished on both sides with lath and plaster or material providing a 15-minute thermal barrier.
(2) Sleeping room doors shall be substantial doors, such as those of 1¾ in. (44 mm) thick, solid-bonded wood core construction or other construction of equal or greater stability and fire integrity.
(3) Any vision panels shall be fixed fire window assemblies in accordance with 8.7.5 or shall be wired glass not exceeding 1296 in.^{2}(0.84 m^2) each installed in approved frames.

26.2.3.6.2 The requirements of 26.2.3.6.1 shall not apply to corridor walls that are smoke partitions in accordance with Section 8.10 where the facility is protected in accordance with 26.2.3.5. In such instances, there shall be no limitation on the type or size of glass panels. Door-closing shall comply with 26.2.3.6.5.

26.2.3.6.3 There shall be no louvers, operable transoms, or other air passages penetrating the wall other than properly installed heating and utility installations, as modified by 26.2.3.6.4.

26.2.3.6.4 Transfer grilles shall not be permitted in corridor walls.

26.2.3.6.5 Doors shall meet the following requirements:

(1) Doors shall be provided with latches or other mechanisms to keep the doors closed.
(2) No doors shall be arranged to prevent the occupant from closing the door.
(3) Doors shall be self-closing or automatic-closing in accordance with 11.2.1.8 in buildings other than those protected throughout by an approved automatic sprinkler system in accordance with 26.2.3.5.

26.2.4 Reserved.

26.2.5 Building Services.

26.2.5.1 Utilities. Utilities shall comply with Chapters 49, 52, and 53.

26.2.5.2 Heating, Ventilating, and Air-Conditioning. Heating, ventilating, and air-conditioning equipment shall comply with Chapters 50 and 51, unless otherwise required in this chapter.

26.2.5.3 Elevators, Escalators, and Conveyors. Elevators, escalators, and conveyors shall comply with Chapter 54.

26.3 Large Facilities.

26.3.1 General.

26.3.1.1 Scope.

26.3.1.1.1 Section 26.3 shall apply to residential board and care occupancies providing sleeping accommodations for more than 16 residents.

26.3.1.1.2 Facilities having sleeping accommodations for not more than 16 residents shall comply with Section 26.2.

26.3.1.2 Minimum Construction Requirements. Building construction shall be in accordance with all of the following:

(1) Chapter 7, Construction Types and Height and Area Requirements
(2) Chapter 8, Fire-Resistive Materials and Construction
(3) Chapter 13, Encroachments into the Public Right-of-Way
(4) Chapter 14, Safeguards During Construction
(5) Chapter 31, Occupancies in Special Structures
(6) Chapter 35, Structural Design
(7) Chapter 36, Soils, Foundations, and Retaining Walls
(8) Chapter 37, Exterior Wall Construction
(9) Chapter 38, Roof Assemblies and Roof Structures
(10) Chapter 39, Flood-Resistant Design and Construction
(11) Chapter 40, Quality Assurance During Construction

26.3.1.3 Occupant Load. The occupant load, in number of persons for whom means of egress and other provisions are required, shall be determined on the basis of the occupant load factors of Table 11.3.1.2 that are characteristic of the use of the space, or shall be determined as the maximum probable population of the space under consideration, whichever is greater.

26.3.1.4 Accessibility. Accessibility shall be in accordance with Chapter 12.

26.3.2 Means of Egress. Means of egress shall be in accordance with Chapter 11.

26.3.2.1 Means of Egress Components.

26.3.2.1.1 Means of Egress Components. Components of means of egress shall be limited to the types described in 26.3.2.1.2 through 26.3.2.1.10.

26.3.2.1.2 Doors. Doors in means of egress shall be as follows:

(1) Doors complying with 11.2.1 shall be permitted.
(2) Doors within individual rooms and suites of rooms shall be permitted to be swinging or sliding.
(3) No door, other than a door meeting the requirements of 26.3.2.1.2(4) or (5), shall be equipped with a lock or latch that requires the use of a tool or key from the egress side.
(4) Delayed-egress locks in accordance with 11.2.1.6.1 shall be permitted, provided that not more than one device is located in any egress path.
(5) Access-controlled egress doors in accordance with 11.2.1.6.2 shall be permitted.
(6) Revolving doors complying with 11.2.1.10 shall be permitted.
(7) Every bathroom door shall be designed to allow opening from the outside during an emergency when locked.

26.3.2.1.3 Stairs. Stairs complying with 11.2.2 shall be permitted.

26.3.2.1.4 Smokeproof Enclosures. Smokeproof enclosures complying with 11.2.3 shall be permitted.

Copyright National Fire Protection Association
Provided by IHS under license with NFPA
No reproduction or networking permitted without license from IHS
Not for Resale

26.3.2.1.5 Horizontal Exits. Horizontal exits complying with 11.2.4 shall be permitted.

26.3.2.1.6 Ramps. Ramps complying with 11.2.5 shall be permitted.

26.3.2.1.7 Exit Passageways. Exit passageways complying with 11.2.6 shall be permitted.

26.3.2.1.8 Fire Escape Ladders. Fire escape ladders complying with 11.2.9 shall be permitted.

26.3.2.1.9 Alternating Tread Devices. Alternating tread devices complying with 11.2.11 shall be permitted.

26.3.2.1.10 Areas of Refuge. Areas of refuge complying with 11.2.12 shall be permitted.

26.3.2.2 Capacity of Means of Egress.

26.3.2.2.1 The capacity of means of egress shall be in accordance with Section 11.3.

26.3.2.2.2 Street floor exits shall be sized to accommodate the occupant load of the street floor plus the required capacity of stairs and ramps discharging onto the street floor.

26.3.2.2.3 The width of corridors shall be sized to accommodate the occupant load served but shall not be less than 60 in. (1525 mm).

26.3.2.3 Number of Exits. The minimum number of exits as required by Section 11.4 shall be provided on every story.

26.3.2.4 Arrangement of Means of Egress.

26.3.2.4.1 Access to all required exits shall be in accordance with Section 11.5.

26.3.2.4.2 No common path of travel shall exceed 125 ft (38 m).

26.3.2.4.3 No dead-end corridor shall exceed 30 ft (9.1 m).

26.3.2.4.4 Any room or any suite of rooms exceeding 2000 ft^2 (185 m^2) shall be provided with not less than two exit access doors located remotely from each other.

26.3.2.5 Travel Distance to Exits. Travel distance from any point in a room to the nearest exit, measured in accordance with Section 11.6, shall not exceed 250 ft (76 m).

26.3.2.6 Discharge from Exits. Exit discharge shall comply with Section 11.7.

26.3.2.7 Illumination of Means of Egress. Means of egress shall be illuminated in accordance with Section 11.8.

26.3.2.8 Emergency Lighting. Emergency lighting in accordance with Section 11.9 shall be provided, unless each sleeping room has a direct exit to the outside at ground level.

26.3.2.9 Marking of Means of Egress. Means of egress shall be marked in accordance with Section 11.10.

26.3.2.10 Reserved.

26.3.2.11 Special Means of Egress Features.

26.3.2.11.1 Reserved.

26.3.2.11.2 Lockups. Lockups in residential board and care occupancies shall comply with the requirements of 21.4.5.

26.3.3 Protection.

26.3.3.1 Protection of Vertical Openings.

26.3.3.1.1 Vertical openings shall be enclosed or protected in accordance with Section 8.12.

26.3.3.1.2 Unenclosed vertical openings in accordance with 8.12.4.2 shall be permitted.

26.3.3.1.3 No floor below the level of exit discharge used only for storage, heating equipment, or purposes other than residential occupancy shall have unprotected openings to floors used for residential occupancy.

26.3.3.2 Protection from Hazards.

26.3.3.2.1 Hazardous areas shall be protected in accordance with Section 8.15.

26.3.3.2.2 The areas described in Table 26.3.3.2.2 shall be protected as indicated.

Table 26.3.3.2.2 Hazardous Area Protection

Hazardous Area Description	Separation/Protection
Boiler and fuel-fired heater rooms	1 hour
Central/bulk laundries >100 ft^2 (>9.3 m^2)	1 hour
Paint shops employing hazardous substances and materials in quantities less than those that would be classified as a severe hazard	1 hour
Physical plant maintenance shops	1 hour
Soiled linen rooms	1 hour
Storage rooms >50 ft^2 (>4.6 m^2), but ≤100 ft^2 (≤9.3 m^2), storing combustible material	Smoke partition
Storage rooms >100 ft^2 (>9.3 m^2) storing combustible material	1 hour
Trash collection rooms	1 hour

26.3.3.3* Interior Finish.

26.3.3.3.1 General. Interior finish shall be in accordance with Chapter 10.

26.3.3.3.2 Interior Wall and Ceiling Finish. Interior wall and ceiling finish materials shall be in accordance with the following:

(1) Exit enclosures—Class A
(2) Lobbies and corridors—Class A or Class B
(3) Rooms and enclosed spaces—Class A or Class B

26.3.3.3.3 Interior Floor Finish.

26.3.3.3.3.1 Interior floor finish shall comply with Section 10.6.

26.3.3.3.3.2 Interior floor finish in exit enclosures and in exit access corridors, and in spaces not separated from them by walls complying with 26.3.3.6.2, shall be not less than Class II.

Copyright National Fire Protection Association
Provided by IHS under license with NFPA
No reproduction or networking permitted without license from IHS
Not for Resale

26.3.3.3.3.3 Interior floor finish shall comply with 10.6.1 or 10.6.2, as applicable.

26.3.3.4 Detection, Alarm, and Communications Systems.

26.3.3.4.1 General. A fire alarm system shall be provided in accordance with Section 55.2.

26.3.3.4.2 Initiation. The required fire alarm system shall be initiated by each of the following:

(1) Manual means in accordance with 55.2.2.1
(2) Manual fire alarm box located at a convenient central control point under continuous supervision of responsible employees
(3) Automatic sprinkler system
(4) Required detection system(s)

26.3.3.4.3 Annunciator Panel. An annunciator panel connected to the fire alarm system shall be provided at a location readily accessible from the primary point of entry for emergency response personnel.

26.3.3.4.4 Occupant Notification. Occupant notification shall be provided automatically, without delay, in accordance with 55.2.3.

26.3.3.4.5 High-Rise Buildings. High-rise buildings shall be provided with an approved emergency voice/alarm communication system in accordance with 33.2.1.

26.3.3.4.6* Emergency Forces Notification. Emergency forces notification shall meet the following requirements:

(1) Fire department notification shall be accomplished in accordance with 55.2.4.
(2) Smoke-detection devices or smoke detection systems shall be permitted to initiate a positive alarm sequence in accordance with 55.2.3.4 for not more than 120 seconds.

26.3.3.4.7 Smoke Alarms. Approved smoke alarms shall be installed in accordance with 55.2.2.6 inside every sleeping room, outside every sleeping area in the immediate vicinity of the bedrooms, and on all levels within a resident unit.

26.3.3.4.8 Smoke Detection Systems.

26.3.3.4.8.1 Corridors and spaces open to corridors, other than those meeting the requirements of 26.3.3.4.8.2, shall be provided with smoke detectors in accordance with *NFPA 72, National Fire Alarm Code*, that are arranged to initiate an alarm that is audible in all sleeping areas.

26.3.3.4.8.2 Smoke detection systems shall not be required in unenclosed corridors, passageways, balconies, colonnades, or other arrangements in which one or more sides along the long dimension are fully or extensively open to the exterior at all times.

26.3.3.5 Extinguishment Requirements.

26.3.3.5.1* General. All buildings shall be protected throughout by an approved automatic sprinkler system installed in accordance with NFPA 13, and quick-response or residential sprinklers shall be provided throughout.

26.3.3.5.2 Reserved.

26.3.3.5.3 Supervision. Automatic sprinkler systems shall be provided with electrical supervision in accordance with 55.3.2.

26.3.3.5.4 Reserved.

26.3.3.5.5 Portable Fire Extinguishers. Portable fire extinguishers shall be provided in accordance with Section 55.6.

26.3.3.6* Corridors and Separation of Sleeping Rooms.

26.3.3.6.1 Access shall be provided from every resident use area to at least one means of egress that is separated from all sleeping rooms by walls complying with 26.3.3.6.3 through 26.3.3.6.6.

26.3.3.6.2 Sleeping rooms shall be separated from corridors, living areas, and kitchens by walls complying with 26.3.3.6.3 through 26.3.3.6.6.

26.3.3.6.3 Walls required by 26.3.3.6.1 or 26.3.3.6.2 shall be smoke partitions in accordance with Section 8.10 and shall have a fire resistance rating of not less than ½ hour.

26.3.3.6.4 Doors protecting corridor openings shall not be required to have a fire protection rating, but shall be constructed to resist the passage of smoke.

26.3.3.6.5 Door-closing devices shall not be required on doors in corridor wall openings, other than those serving required exits, smoke barriers, or enclosures of vertical openings or hazardous areas.

26.3.3.6.6 No louvers, transfer grilles, operable transoms, or other air passages shall penetrate the walls or doors specified in 26.3.3.6, except properly installed heating and utility installations.

26.3.3.7 Subdivision of Building Spaces. Buildings shall be subdivided by smoke barriers in accordance with 26.3.3.7.1 through 26.3.3.7.21.

26.3.3.7.1 Every story shall be divided into not less than two smoke compartments, unless it meets the requirements of 26.3.3.7.2, 26.3.3.7.3, 26.3.3.7.4, or 26.3.3.7.5.

26.3.3.7.2 Smoke barriers shall not be required on stories that do not contain a residential board and care occupancy where such stories are located entirely above the residential board and care occupancy.

26.3.3.7.3 Smoke barriers shall not be required in areas that do not contain a residential board and care occupancy and that are separated from the residential board and care occupancy by a fire barrier complying with Section 8.4.

26.3.3.7.4 Smoke barriers shall not be required on stories that do not contain residential board and care occupancies and that are more than one story below the residential board and care occupancy.

26.3.3.7.5 Smoke barriers shall not be required in open-air parking structures protected throughout by an approved, supervised automatic sprinkler system in accordance with Section 55.3.

26.3.3.7.6 Each smoke compartment shall have an area of not more than 22,500 ft^2 (2100 m^2).

26.3.3.7.7 The travel distance from any point to reach a door in the required smoke barrier shall be limited to 200 ft (61 m).

26.3.3.7.8 Smoke barriers shall be constructed in accordance with Section 8.11 and shall have a fire resistance rating of not less than 1 hour, unless they meet the requirements of 26.3.3.7.9 or 26.3.3.7.10.

26.3.3.7.9 In buildings containing atria, smoke barriers shall be permitted to terminate at an atrium wall constructed in accordance with 8.12.3(1)(b), provided that not less than two separate smoke compartments are provided on each floor.

Copyright National Fire Protection Association
Provided by IHS under license with NFPA
No reproduction or networking permitted without license from IHS
Not for Resale

26.3.3.7.10* Dampers shall not be required in duct penetrations of smoke barriers in fully ducted heating, ventilating, and air-conditioning systems.

26.3.3.7.11 Not less than 15 net ft^2 (1.4 net m^2) per resident shall be provided within the aggregate area of corridors, lounges or dining areas, and other common areas on each side of the smoke barrier.

26.3.3.7.12 On stories that do not house residents, not less than 6 net ft^2 (0.56 net m^2) per occupant shall be provided on each side of the smoke barrier for the total number of occupants in adjoining compartments.

26.3.3.7.13 Doors in smoke barriers shall be substantial doors, such as 1¾ in. (44 mm) thick, solid-bonded wood core doors, or shall be of construction that resists fire for not less than 20 minutes.

26.3.3.7.14 Nonrated factory- or field-applied protective plates extending not more than 48 in. (1220 mm) above the bottom of the doors specified in 26.3.3.7.13 shall be permitted.

26.3.3.7.15* Cross-corridor openings in smoke barriers shall be protected by a pair of swinging doors or a horizontal-sliding door complying with 11.2.1.14.

26.3.3.7.16 Swinging doors shall be arranged so that each door swings in a direction opposite from the other.

26.3.3.7.17* Doors in smoke barriers shall comply with 8.11.4, other than 8.11.4.1, and shall be self-closing or automatic-closing in accordance with 11.2.1.8.

26.3.3.7.18* Vision panels consisting of fire-rated glazing or wired glass panels in approved frames shall be provided in each cross-corridor swinging door and at each cross-corridor horizontal-sliding door in a smoke barrier.

26.3.3.7.19 Rabbets, bevels, or astragals shall be required at the meeting edges, and stops shall be required at the head and sides of door frames in smoke barriers.

26.3.3.7.20 Positive latching hardware shall not be required on smoke barrier doors.

26.3.3.7.21 Center mullions shall be prohibited on smoke barrier doors.

26.3.3.8* Cooking Facilities. Cooking facilities, other than those within individual residential units, shall be protected in accordance with Section 55.10.

26.3.3.9 Standpipes.

26.3.3.9.1 Class I standpipe systems shall be provided where required by 55.4.1.

26.3.3.9.2 Roof outlets shall not be required on roofs having a slope of 3 in 12 or greater.

26.3.4 Special Provisions.

26.3.4.1 Limited Access or Underground Buildings. Limited access or underground buildings shall comply with Chapter 31.

26.3.5 High-Rise Buildings. High-rise buildings shall comply with Chapter 33.

26.3.6 Building Services.

26.3.6.1 Utilities. Utilities shall comply with Chapters 49, 52, and 53.

26.3.6.2 Heating, Ventilating, and Air-Conditioning. Heating, ventilating, and air-conditioning equipment shall comply with Chapters 50 and 51.

26.3.6.3 Elevators, Dumbwaiters, and Vertical Conveyors.

26.3.6.3.1 Elevators, dumbwaiters, and vertical conveyors shall comply with Chapter 54.

26.3.6.3.2* In high-rise buildings, one elevator shall be provided with a protected power supply and shall be available for use by the fire department in case of emergency.

26.3.6.4 Rubbish Chutes, Incinerators, and Laundry Chutes. Rubbish chutes, incinerators, and laundry chutes shall comply with Section 8.17.

Chapter 27 Mercantile Occupancies

27.1 General Requirements.

27.1.1 Application.

27.1.1.1 The requirements of this chapter shall apply to new buildings or portions thereof used as a mercantile occupancy.

27.1.1.2 Repairs, renovations, modifications, additions, and reconstruction of a mercantile occupancy, and changes of use, including change of occupancy classification to a mercantile occupancy, or correction of a damaged or unsafe portion of the building containing the mercantile occupancy, shall comply with one of the following:

(1) Provisions of this chapter
(2) Provisions of Chapter 15

27.1.1.3 This chapter shall establish requirements for all buildings, or portions thereof, used as mercantile occupancies. Suboccupancy groups such as Class A, Class B, and Class C mercantile occupancies; malls; and bulk merchandising retail buildings shall comply with the requirements of the paragraphs pertaining thereto.

27.1.1.4 When a mercantile occupancy changes from Class C to Class A or Class B, or from Class B to Class A, the provisions of this chapter shall apply.

27.1.2 Multiple Occupancies.

27.1.2.1 General. All multiple occupancies shall be in accordance with Section 6.2 and 27.1.2. Where there are differences in the specific requirements in this chapter and provisions for mixed occupancies or separated occupancies as specified in 6.2.3 and 6.2.4, the requirements of this chapter shall apply. *(See 4.3.2.3.)*

27.1.2.2 Combined Mercantile Occupancies and Parking Structures.

27.1.2.2.1 The wall separating a parking structure from a building classified as a mercantile occupancy shall be a fire barrier having a fire resistance rating of not less than 2 hours.

27.1.2.2.2 Openings in the fire barrier shall not be required to be protected with fire protection–rated opening protectives in enclosed parking structures that are protected throughout by an approved, supervised automatic sprinkler system in accordance with NFPA 13, *Standard for the Installation of Sprinkler Systems*, and 55.3.2, or in open parking structures, provided that all of the following conditions are met:

Copyright National Fire Protection Association
Provided by IHS under license with NFPA
No reproduction or networking permitted without license from IHS
Not for Resale

(1) The openings do not exceed 25 percent of the area of the fire barrier in which they are located.
(2) The openings are used as a public entrance and for associated sidelight functions.
(3) The buildings containing the mercantile occupancy are protected throughout by an approved, supervised automatic sprinkler system in accordance with NFPA 13 and 55.3.2.
(4) *Means are provided to prevent spilled fuel from accumulating adjacent to the openings and entering the building.
(5) Physical means are provided to prevent vehicles from being parked or driven within 10 ft (3050 mm) of the openings.
(6) The openings are protected as required for a smoke partition in accordance with Section 8.10, with no minimum fire protection rating required.

27.1.3 Classification of Occupancy.

27.1.3.1 General. Mercantile occupancies shall include all buildings and structures, or parts thereof with mercantile occupancy, as defined in 6.1.10.

27.1.3.2 Subclassification of Occupancy.

27.1.3.2.1 Mercantile occupancies shall be subclassified as follows:

(1) Class A — All mercantile occupancies having an aggregate gross area of more than 30,000 ft^2 (2800 m^2) or occupying more than three stories for sales purposes
(2) Class B — All mercantile occupancies of more than 3000 ft^2 (280 m^2), but not more than 30,000 ft^2 (2800 m^2), aggregate gross area occupying not more than three stories for sales purposes
(3) Class C — All mercantile occupancies of not more than 3000 ft^2 (280 m^2) gross area used for sales purposes occupying one story only

27.1.3.2.2 For the purpose of the classification required in 27.1.3.2.1, the aggregate gross area shall be the total gross area of all floors used for mercantile purposes. Where a mercantile occupancy is divided into sections, regardless of fire separation, the aggregate gross area shall include the area of all sections used for sales purposes. Areas of floors not used for sales purposes, such as an area used only for storage and not open to the public, shall not be counted for the purposes of the classifications in 27.1.3.2.1(1) through (3). However, means of egress shall be provided for such nonsales areas in accordance with their occupancy, as specified by other chapters of this *Code*.

27.1.3.2.3 Mezzanines shall comply with 8.13.

27.1.3.2.4 Where a number of tenant spaces under different management are located in the same building, the aggregate gross area for subclassification shall be determined in accordance with any of the following:

(1) Where tenant spaces are not separated, the aggregate gross floor area of all such tenant spaces shall be used in determining classification per 27.1.3.2.1.
(2) Where individual tenant spaces are separated by fire barriers with a 2-hour fire resistance rating, each tenant space shall be individually classified.
(3) Where tenant spaces are separated by fire barriers with a 1-hour fire resistance rating and the building is protected throughout by an approved, supervised automatic sprinkler system in accordance with NFPA 13 and 55.3.2, each tenant space shall be individually classified.
(4) The tenant spaces in a mall building in accordance with 27.4.4 shall be classified individually.

27.1.4 Classification of Hazard of Contents.

27.1.4.1 Hazard of contents shall be classified in accordance with 6.3.2.

27.1.4.2 Buildings or areas in which high hazard contents are stored, used, or handled shall comply with Chapter 34.

27.1.5 Minimum Construction Requirements. Construction types and heights and area requirements shall be in accordance with all of the following:

(1) Chapter 7, Construction Types and Height and Area Requirements
(2) Chapter 8, Fire-Resistive Materials and Construction
(3) Chapter 13, Encroachments into the Public Right-of-Way
(4) Chapter 14, Safeguards During Construction
(5) Chapter 31, Occupancies in Special Structures
(6) Chapter 35, Structural Design
(7) Chapter 36, Soils, Foundations, and Retaining Walls
(8) Chapter 37, Exterior Wall Construction
(9) Chapter 38, Roof Assemblies and Roof Structures
(10) Chapter 39, Flood-Resistant Design and Construction
(11) Chapter 40, Quality Assurance During Construction

27.1.6 Occupant Load. The occupant load, in number of persons for whom means of egress and other provisions are required, shall be determined on the basis of the occupant load factors of Table 11.3.1.2 that are characteristic of the use of the space, or shall be determined as the maximum probable population of the space under consideration, whichever is greater.

27.1.7 Accessibility. Accessibility shall be in accordance with Chapter 12.

27.2 Means of Egress Requirements.

27.2.1 General.

27.2.1.1 All means of egress shall be in accordance with Chapter 11 and this chapter.

27.2.1.2 No inside open stairway or inside open ramp shall be permitted to serve as a component of the required means of egress system for more than one floor.

27.2.1.3 Where there are two or more floors below the street floor, the same stair or other exit shall be permitted to serve all floors, but all required exits from such areas shall be independent of any open stairways between the street floor and the floor below.

27.2.1.4 Where exits from the upper floor also serve as an entrance from a principal street, the upper floor shall be classified as a street floor in accordance with the definition of street floor *(see 3.3.254.2, Street Floor)* and shall be subject to the requirements of this chapter for street floors.

27.2.1.5 Special considerations for high hazard contents shall be in accordance with 6.3.2.

27.2.2 Means of Egress Components.

27.2.2.1 General. Components of means of egress shall be limited to the types described in 27.2.2.2 through 27.2.2.12.

27.2.2.2 Doors.

27.2.2.2.1 Doors complying with 11.2.1 shall be permitted.

Copyright National Fire Protection Association
Provided by IHS under license with NFPA
No reproduction or networking permitted without license from IHS
Not for Resale

27.2.2.2.2* Locks complying with 11.2.1.5.5 shall be permitted only on principal entrance/exit doors.

27.2.2.2.3 Reserved.

27.2.2.2.4 Delayed-egress locks complying with 11.2.1.6.1 shall be permitted.

27.2.2.2.5 Access-controlled egress doors complying with 11.2.1.6.2 shall be permitted in buildings protected throughout by an approved, supervised fire detection system in accordance with Section 55.2 or an approved, supervised automatic sprinkler system in accordance with NFPA 13 and 55.3.2.

27.2.2.2.6 Where horizontal or vertical security grilles or doors are used as a part of the required means of egress from a tenant space, such grilles or doors shall comply with 11.2.1.4.1.3.

27.2.2.2.7 All doors at the foot of stairs from upper floors or at the head of stairs leading to floors below the street floor shall swing in the direction of egress travel.

27.2.2.2.8 Revolving doors complying with 11.2.1.10 shall be permitted.

27.2.2.3 Stairs.

27.2.2.3.1 Stairs complying with 11.2.2 shall be permitted.

27.2.2.3.2 Spiral stairs complying with 11.2.2.2.3 shall be permitted.

27.2.2.4 Smokeproof Enclosures. Smokeproof enclosures complying with 11.2.3 shall be permitted.

27.2.2.5 Horizontal Exits. Horizontal exits complying with 11.2.4 shall be permitted.

27.2.2.6 Ramps. Ramps complying with 11.2.5 shall be permitted.

27.2.2.7 Exit Passageways.

27.2.2.7.1 Exit passageways complying with 11.2.6 shall be permitted.

27.2.2.7.2* An exit passageway in a mall building shall be permitted to accommodate the following independently:

(1) Portion of the occupant load assigned to the exit passageway from only the mall
(2) Largest occupant load assigned to the exit passageway from a single tenant space

27.2.2.8 Reserved.

27.2.2.9 Reserved.

27.2.2.10 Fire Escape Ladders. Fire escape ladders complying with 11.2.9 shall be permitted.

27.2.2.11 Alternating Tread Devices. Alternating tread devices complying with 11.2.11 shall be permitted.

27.2.2.12 Areas of Refuge.

27.2.2.12.1 Areas of refuge complying with 11.2.12 shall be permitted.

27.2.2.12.2 In buildings protected throughout by an approved, supervised automatic sprinkler system in accordance with NFPA 13 and 55.3.2, two rooms or spaces separated from each other by smoke-resistant partitions in accordance with the definition of area of refuge shall not be required. *(See 3.3.34, Area of Refuge.)*

27.2.3 Capacity of Means of Egress.

27.2.3.1 The capacity of means of egress shall be in accordance with Section 11.3.

27.2.3.2 In Class A and Class B mercantile occupancies, street floor exits shall be sufficient for the occupant load of the street floor plus the required capacity of stairs and ramps discharging through the street floor.

27.2.4 Number of Exits. The number of exits shall comply with the following:

(1) The number of means of egress shall be in accordance with Section 11.4.
(2) A single means of egress shall be permitted in a Class C mercantile occupancy, provided that the travel distance to the exit or to a mall does not exceed 75 ft (23 m).
(3) A single means of egress shall be permitted in a Class C mercantile occupancy, provided that the travel distance to the exit or to a mall does not exceed 100 ft (30 m), and the story on which the occupancy is located and all communicating levels that are traversed to reach the exit or mall are protected throughout by an approved, supervised automatic sprinkler system in accordance with NFPA 13 and 55.3.2.
(4) A single means of egress to an exit or to a mall shall be permitted from a mezzanine within any Class A, Class B, or Class C mercantile occupancy, provided that the common path of travel does not exceed 75 ft (23 m), or does not exceed 100 ft (30 m) if protected throughout by an approved, supervised automatic sprinkler system in accordance with NFPA 13 and 55.3.2.

27.2.5 Arrangement of Means of Egress.

27.2.5.1 General. Means of egress shall be arranged in accordance with Section 11.5.

27.2.5.2 Dead Ends.

27.2.5.2.1 In buildings protected throughout by an approved, supervised automatic sprinkler system in accordance with NFPA 13 and 55.3.2, dead-end corridors shall not exceed 50 ft (15 m).

27.2.5.2.2 In buildings other than those specified in 27.2.5.2.1, dead-end corridors shall not exceed 20 ft (6100 mm).

27.2.5.3 Common Paths of Travel. Common paths of travel shall be limited as follows:

(1) They shall not exceed 75 ft (23 m) in mercantile occupancies.
(2) They shall not exceed 100 ft (30 m) in mercantile occupancies where the building is protected throughout by an approved, supervised automatic sprinkler system in accordance with NFPA 13 and 55.3.2.

27.2.5.4 Aisles.

27.2.5.4.1 Aisles leading to each exit shall be required. The aggregate width of such aisles shall be not less than the required width of the exit.

27.2.5.4.2 Required aisles shall be not less than 36 in. (915 mm) in clear width.

27.2.5.4.3 In Class A mercantile occupancies, not less than one aisle of a minimum 60 in. (1525 mm) width shall lead directly to an exit.

--`,,```,,,,````-`-`,,`,,`,`,,`---
Copyright National Fire Protection Association
Provided by IHS under license with NFPA
No reproduction or networking permitted without license from IHS
Not for Resale

27.2.5.5 Egress Width. In other than bulk merchandising retail buildings, if the only means of customer entrance is through one exterior wall of the building, one-half of the required egress width from the street floor shall be located in such wall. Means of egress from floors above or below the street floor shall be arranged in accordance with Section 11.5.

27.2.5.6 Checkout Stands. Not less than one-half of the required exits shall be located so as to be reached without passing through checkout stands. In no case shall checkout stands or associated railings or barriers obstruct exits or required aisles, or approaches thereto.

27.2.5.7* Carts and Buggies. Where wheeled carts or buggies are used by customers, adequate provision shall be made for the transit and parking of such carts to minimize the possibility that they might obstruct means of egress.

27.2.5.8 Exit Access Through Storerooms. Exit access in Class A and Class B mercantile occupancies that are protected throughout by an approved, supervised automatic sprinkler system in accordance with NFPA 13 and 55.3.2, and exit access in all Class C mercantile occupancies, shall be permitted to pass through storerooms, provided that the following conditions are met:

(1) Not more than 50 percent of exit access shall be provided through the storeroom.
(2) The storeroom shall not be subject to locking.
(3) The main aisle through the storeroom shall be not less than 44 in. (1120 mm) wide.
(4) The path of travel through the storeroom, defined with fixed barriers, shall be direct and continuously maintained in an unobstructed condition.

27.2.6 Travel Distance to Exits. Travel distance shall be as specified in 27.2.6.1 or 27.2.6.2 and shall be measured in accordance with Section 11.6.

27.2.6.1 Travel distance in mercantile occupancies shall not exceed 150 ft (46 m).

27.2.6.2 Travel distance in mercantile occupancies in buildings protected throughout by an approved, supervised automatic sprinkler system in accordance with NFPA 13 and 55.3.2 shall not exceed 250 ft (76 m).

27.2.7 Discharge from Exits.

27.2.7.1 Exit discharge shall comply with Section 11.7 and 27.2.7.2.

27.2.7.2* Fifty percent of the exits shall be permitted to discharge through the level of exit discharge in accordance with 11.7.2, provided that the building is protected throughout by an approved, supervised automatic sprinkler system in accordance with NFPA 13 and 55.3.2, and the distance of travel from the termination of the exit enclosure to an outside street door does not exceed 50 ft (15 m).

27.2.8 Illumination of Means of Egress. Means of egress shall be illuminated in accordance with Section 11.8.

27.2.9 Emergency Lighting. Class A and Class B mercantile occupancies and malls shall have emergency lighting facilities in accordance with Section 11.9.

27.2.10 Marking of Means of Egress. Where an exit is not immediately apparent from all portions of the sales area, means of egress shall have signs in accordance with Section 11.10.

27.2.11 Special Means of Egress Features.

27.2.11.1 Reserved.

27.2.11.2 Lockups. Lockups in mercantile occupancies shall comply with the requirements of 21.4.5.

27.3 Protection.

27.3.1 Protection of Vertical Openings. Any vertical opening shall be enclosed or protected in accordance with Section 8.12, except under the following conditions:

(1) In Class A or Class B mercantile occupancies protected throughout by an approved, supervised automatic sprinkler system in accordance with NFPA 13 and 55.3.2, unprotected vertical openings shall be permitted at one of the following locations:
   (a) Between any two floors
   (b) Among the street floor, the first adjacent floor below, and adjacent floor (or mezzanine) above
(2) In Class C mercantile occupancies, unprotected openings shall be permitted between the street floor and the mezzanine.
(3) The draft stop and closely spaced sprinkler requirements of NFPA 13 shall not be required for unenclosed vertical openings permitted in 27.3.1(1) and (2).

27.3.2 Hazardous Area Protection.

27.3.2.1* Storage Areas.

27.3.2.1.1* Hazardous areas shall be protected in accordance with Section 8.15.

27.3.2.1.2 In general storage and stock areas protected by an automatic extinguishing system in accordance with NFPA 13 and 55.3.2, an enclosure, if provided, shall be exempt from the provisions of 8.15.2.

27.3.2.2 Commercial Cooking Facilities. Commercial cooking facilities shall be protected in accordance with Section 55.10, unless the cooking equipment is one of the following types:

(1) Outdoor equipment
(2) Portable equipment not flue connected
(3) Equipment used only for food warming

27.3.3 Interior Finish.

27.3.3.1 General. Interior finish shall be in accordance with Chapter 10.

27.3.3.2 Interior Wall and Ceiling Finish. Interior wall and ceiling finish materials shall be Class A or Class B.

27.3.3.3 Interior Floor Finish.

27.3.3.3.1 Interior floor finish shall comply with Section 10.6.

27.3.3.3.2 Interior floor finish in exit enclosures shall be not less than Class II.

27.3.3.3.3 Interior floor finish shall comply with 10.6.1 or 10.6.2, as applicable.

27.3.4 Detection, Alarm, and Communications Systems.

27.3.4.1 General. Class A mercantile occupancies shall be provided with a fire alarm system in accordance with Section 55.2.

27.3.4.2 Initiation. Initiation of the required fire alarm system shall be by any one of the following:

Copyright National Fire Protection Association
Provided by IHS under license with NFPA
No reproduction or networking permitted without license from IHS
Not for Resale

(1) Manual means in accordance with 55.2.2(1)
(2) Approved automatic fire detection system in accordance with 55.2.2(2) throughout the building and in accordance with 55.2.2.1.5
(3) Approved, supervised automatic sprinkler system complying with NFPA 13 and 55.3.2 and in accordance with 55.2.2(3) throughout the building and in accordance with 55.2.2.1.5

27.3.4.3 Notification.

27.3.4.3.1 Occupant Notification. During all times that the mercantile occupancy is occupied, the required fire alarm system, once initiated, shall perform one of the following functions:

(1) It shall activate an alarm in accordance with 55.2.3 throughout the mercantile occupancy, except a positive alarm sequence in accordance with 55.2.3.4 shall be permitted.
(2) It shall activate an alarm signal in a continuously attended location for the purpose of initiating emergency action by personnel trained to respond to emergencies as follows:
   (a) Emergency action shall be initiated by means of live voice public address system announcements originating from the attended location where the alarm signal is received.
   (b) The live voice public address system shall be permitted to be used for other announcements, provided that the emergency use takes precedence over any other use.
   (c) In lieu of live voice public address system announcements, any other occupant notification means in accordance with 55.2.3 shall be permitted.

27.3.4.3.2 Emergency Forces Notification. Emergency forces notification shall be provided and shall include notifying the following:

(1) Fire department in accordance with 55.2.4
(2) Approved local emergency organization, if provided

27.3.5 Extinguishment Requirements.

27.3.5.1 Mercantile occupancies shall be protected by an approved, supervised automatic sprinkler system in accordance with NFPA 13 and 55.3.2 as follows:

(1) Throughout all mercantile occupancies three or more stories in height
(2) Throughout all mercantile occupancies exceeding 12,000 ft ^{2}(1115 m^2) in gross area
(3) Throughout stories below the level of exit discharge where such stories have an area exceeding 2500 ft^2 (232 m^2) and are used for the sale, storage, or handling of combustible goods and merchandise
(4) Throughout mixed occupancies in accordance with 6.2.2 where the conditions of 27.3.5.1(1), (2), or (3) apply to the mercantile occupancy

27.3.5.2 Automatic sprinkler systems in Class A mercantile occupancies shall be supervised in accordance with 55.3.2.

27.3.5.3 Portable fire extinguishers shall be provided in all mercantile occupancies in accordance with Section 55.6.

27.3.5.4 Class 1 standpipe systems shall be provided when required by 55.4.1.

27.3.6 Corridors.

27.3.6.1* Where access to exits is provided by corridors, such corridors shall be separated from use areas by walls having a fire resistance rating of not less than 1 hour in accordance with Section 8.4, unless one of the following conditions exists:

(1) Where exits are available from an open floor area
(2) Within a space occupied by a single tenant
(3) Within buildings protected throughout by an approved, supervised automatic sprinkler system in accordance with NFPA 13 and 55.3.2

27.3.6.2 Openings in corridor walls required by 27.3.6.1 to have a fire resistance rating shall be protected in accordance with Table 8.7.2.

27.3.7 Subdivision of Building Spaces. (No requirements)

27.4 Special Provisions.

27.4.1 Underground or Limited Access Structures. Underground or limited access structures shall be in accordance with Section 31.2 and Section 31.3.

27.4.2 High-Rise Buildings. High-rise buildings shall comply with the automatic sprinkler requirements of 33.2.2.

27.4.3 Open-Air Mercantile Operations.

27.4.3.1 Open-air mercantile operations, such as open-air markets, gasoline filling stations, roadside stands for the sale of farm produce, and other outdoor mercantile operations, shall be arranged and conducted to maintain free and unobstructed ways of travel at all times. Such ways of travel shall allow prompt escape from any point of danger in case of fire or other emergency, with no dead ends in which persons might be trapped due to display stands, adjoining buildings, fences, vehicles, or other obstructions.

27.4.3.2 If mercantile operations are conducted in roofed-over areas, they shall be treated as mercantile buildings, provided that canopies over individual small stands to protect merchandise from the weather are not construed as constituting buildings for the purpose of this *Code*.

27.4.4 Mall Buildings.

27.4.4.1 Scope. Subsection 27.4.4 shall establish the minimum requirements for mall buildings having not more than three stories and any number of anchor buildings.

27.4.4.2 Special Definitions. A list of special terms used in this chapter follows.

27.4.4.2.1* Anchor Building. A building housing any occupancy having low or ordinary hazard contents and having direct access to a mall building, but having all required means of egress independent of the mall.

27.4.4.2.2* Mall Building. A single building enclosing a number of tenants and occupants wherein two or more tenants have a main entrance into one or more malls. For the purpose of this chapter, anchor buildings shall not be considered as a part of the mall building.

27.4.4.2.3 Food Court. A public seating area located in a mall that serves adjacent food preparation tenant spaces.

27.4.4.2.4 Gross Leasable Area. The total floor area designated for tenant occupancy and exclusive use. The area of tenant occupancy is measured from the centerlines of joint partitions to the outside of the tenant walls. All tenant areas, including areas used for storage, shall be included in calculating gross leasable area.

Copyright National Fire Protection Association
Provided by IHS under license with NFPA
No reproduction or networking permitted without license from IHS
Not for Resale

27.4.4.2.5 Mall. A roofed or covered common pedestrian area within a mall building that serves as access for two or more tenants and does not exceed three levels that are open to each other.

27.4.4.3 Minimum Construction Requirements. Construction shall be in accordance with all of the following:

(1) Chapter 7, Construction Types and Height and Area Requirements
(2) Chapter 8, Fire-Resistive Materials and Construction
(3) Chapter 13, Encroachments into the Public Right-of-Way
(4) Chapter 14, Safeguards During Construction
(5) Chapter 31, Occupancies in Special Structures
(6) Chapter 35, Structural Design
(7) Chapter 36, Soils, Foundations, and Retaining Walls
(8) Chapter 37, Exterior Wall Construction
(9) Chapter 38, Roof Assemblies and Roof Structures
(10) Chapter 39, Flood-Resistant Design and Construction
(11) Chapter 40, Quality Assurance During Construction

27.4.4.3.1 Types of Construction. The area of mall buildings and attached anchor buildings shall not be limited where the mall buildings, anchor buildings, and attached parking structures are surrounded on all sides by a permanent open space of not less than 60 ft (18.3 m) under the following conditions:

(1) Mall buildings and anchor buildings of Type I, Type II, or Type IV construction shall not exceed three stories in height.
(2) Mall buildings and anchor buildings of Type III construction shall not exceed two stories in height.

27.4.4.3.2 Anchor Building Separations.

27.4.4.3.2.1 Each anchor building three stories or less in height of Type I, Type II, or Type IV construction, or two stories or less in height of Type III construction, shall be separated from the mall building and other anchor buildings by a fire barrier having a fire resistance rating determined in accordance with Table 6.2.4.1(a) for the uses being separated, but with a rating of not less than 2 hours.

27.4.4.3.2.2 Anchor buildings of more than three stories in height of Type I, Type II, or Type IV construction, or of more than two stories in height of Type III construction, or any anchor building of Type V construction, shall be separated from the mall building and other anchor buildings by fire walls.

27.4.4.3.3 Anchor Building Openings. Openings in the fire barrier provided in accordance with 27.4.4.3.2.1 between an anchor building and the pedestrian area of the mall shall not be required to be protected for those anchor buildings housing assembly occupancies, business occupancies, and mercantile occupancies other than bulk merchandising retail buildings.

27.4.4.3.4 Parking Structures. Parking structures within 60 ft (18.3 m) of the mall building or anchor building shall meet all of the following criteria:

(1) They shall be of Type I or Type II construction.
(2) They shall be limited in height in accordance with Section 30.8.
(3) They shall be separated in accordance with 27.1.2.

27.4.4.3.5 Tenant Separations.

27.4.4.3.5.1 Each tenant space shall be separated from other tenant spaces by partitions having a fire resistance rating of not less than 1 hour.

27.4.4.3.5.2* The partition shall extend to the underside of the ceiling.

27.4.4.3.5.3 No separation shall be required between the tenant space and the mall.

27.4.4.4 Mixed Occupancies. Assembly occupancies other than stadiums and arenas, and business and mercantile occupancies located in mall buildings shall not be required to comply with the provisions of 6.2.4.

27.4.4.5 Means of Egress.

27.4.4.5.1 All means of egress shall be in accordance with Chapter 11 and this chapter.

27.4.4.5.2 The mall shall be permitted to be considered a pedestrian way, provided that the criteria of 27.4.4.5.2.1 through 27.4.4.5.2.2 are met.

27.4.4.5.2.1 The travel distance within a tenant space to an exit or to the mall shall not exceed 200 ft (61 m) or the maximum travel distance permitted by the occupancy chapter.

27.4.4.5.2.2 An additional 200 ft (61 m) shall be permitted for travel through the mall space, provided that all of the following requirements are met:

(1) The mall shall be of a clear width not less than that needed to accommodate egress requirements as set forth in other sections of this chapter, but shall be not less than 20 ft (6100 mm) wide in its narrowest dimension.
(2) On each side of the mall floor area, the mall shall be provided with an unobstructed exit access of not less than 10 ft (3050 mm) in clear width parallel to, and adjacent to, the mall tenant front.
(3)*Such exit access from a mall shall lead to an exit having a width of not less than 66 in. (1675 mm).
(4) The mall, and all buildings connected thereto, shall be protected throughout by an approved, supervised automatic sprinkler system in accordance with 55.3.1.1(1).
(5) The sprinkler system specified in 27.4.4.5.2.2(4) shall be installed in such a manner that any portion of the system serving tenant spaces can be taken out of service without affecting the operation of the portion of the system serving the mall.
(6) Walls dividing tenant spaces from each other shall extend from the floor to the underside of the roof deck, floor deck above, or ceiling where the ceiling is constructed to limit the transfer of smoke, and the following also shall apply:
    (a) Where the tenant areas are provided with an engineered smoke control system, walls shall not be required to divide tenant spaces from each other.
    (b) No separation shall be required between a tenant space and the mall.
(7)*The mall shall be provided with a smoke control system.

27.4.4.5.3 Dead ends not exceeding a length equal to twice the width of the mall, measured at the narrowest location within the dead-end portion of the mall, shall be permitted.

27.4.4.5.4 Each assembly occupancy with an occupant load of 500 or more shall have not less than one-half of its required means of egress independent of the mall.

27.4.4.5.5 Every story of a mall building shall be provided with the number of means of egress specified by Section 11.4 and as modified by 27.4.4.5.5.1 or 27.4.4.5.5.2.

Copyright National Fire Protection Association
Provided by IHS under license with NFPA
No reproduction or networking permitted without license from IHS
Not for Resale

27.4.4.5.5.1 Exit access travel shall be permitted to be common for the distances permitted as common paths of travel by 27.2.5.3.

27.4.4.5.5.2 A single means of egress shall be permitted in a Class C mercantile occupancy or a business occupancy, provided that the travel distance to the exit or to a mall does not exceed 100 ft (30 m).

27.4.4.5.6* Each individual anchor building shall have means of egress independent of the mall.

27.4.4.5.7 Each individual tenant space shall have means of egress to the outside or to the mall based on occupant load calculated in accordance with Table 11.3.1.2.

27.4.4.5.8 Where horizontal or vertical security grilles or doors are used as a part of the required means of egress from a tenant space, such grilles or doors shall comply with 11.2.1.4.1.3.

27.4.4.5.9 Exit passageways shall comply with 27.4.4.5.9.1 and 27.4.4.5.9.2.

27.4.4.5.9.1 Exit passageways in a mall building shall be permitted to accommodate the following independently:

(1) Portion of the occupant load assigned to the exit passageway from only the mall
(2) Largest occupant load assigned to the exit passageway from a single tenant space

27.4.4.5.9.2* Rooms housing building service equipment, janitor closets, and service elevators shall be permitted to open directly onto exit passageways, provided that the following criteria are met:

(1) The required fire resistance rating between such rooms or areas and the exit passageway shall be maintained in accordance with 11.1.3.2.
(2) Such rooms or areas shall be protected by an approved, supervised automatic sprinkler system in accordance with NFPA 13 and 55.3.2; however, the exceptions in NFPA 13 that permit the omission of sprinklers from such rooms shall not be permitted.
(3) Service elevators opening into the exit passageway shall not open into areas other than exit passageways.
(4) Where exit stair enclosures discharge into the exit passageway, the provisions of 11.2.1.5.8 shall apply, regardless of the number of stories served.

27.4.4.6 Mall Exit Capacity. The capacity of the required exits from the mall shall accommodate the occupant load calculated as the sum of the occupant loads required in 27.4.4.6.1 and 27.4.4.6.2.

27.4.4.6.1 The gross leasable area of the mall building (not including anchor buildings) shall be divided by the appropriate lowest whole number occupant load factor (OLF) from Figure 11.3.1.2. The occupant load factor shall not be less than 30 and shall not exceed 55.

27.4.4.6.2 For any food court or other assembly occupancy areas located in the mall that are not included as a portion of the gross leasable area of the mall building, an occupant load shall be calculated based on the occupant load factor for the appropriate use, as specified in Table 11.3.1.2. The remaining mall area shall not be assigned an occupant load.

27.4.4.7 Fire Protection Systems.

27.4.4.7.1 Automatic Extinguishing Systems.

27.4.4.7.1.1 The mall building and all anchor buildings shall be protected throughout by an approved, supervised automatic sprinkler system in accordance with NFPA 13, 55.3.2, and 27.4.4.7.1.

27.4.4.7.1.2 The system shall be installed in such a manner that any portion of the system serving tenant spaces can be taken out of service without affecting the operating of the portion of the system serving the mall.

27.4.4.7.2 Hose Connections.

27.4.4.7.2.1 There shall be a hose outlet connected to a system sized to deliver 250 gal/min (946 L/min) at the most hydraulically remote outlet.

27.4.4.7.2.2 The outlet shall be supplied from the mall zone sprinkler system and shall be hydraulically calculated.

27.4.4.7.2.3 Hose outlets shall be provided at each of the following locations:

(1) Within the mall at the entrance to each exit passage or corridor
(2) At each floor level landing within enclosed stairways opening directly onto the mall
(3) At exterior public entrances to the mall

27.4.4.8* Smoke Control. A smoke control system complying with 8.12.3(5) shall be provided in a mall with floor openings connecting more than two levels.

27.4.4.9 Fire Department Access to Equipment. Rooms or areas containing controls for air-conditioning systems; automatic fire-extinguishing systems; or other detection, suppression, or control elements shall be identified for use by the fire department.

27.4.4.10 Alarm Systems.

27.4.4.10.1 General. Malls shall be provided with a fire alarm system in accordance with Section 55.2, as modified by 27.4.4.10.

27.4.4.10.2 Initiation. Initiation of the required fire alarm system shall be by means of the required automatic sprinkler system in accordance with 55.2.2(3) and by manual means in accordance with 55.2.2.1.5 and 55.2.2.1.6.

27.4.4.10.3 Notification.

27.4.4.10.3.1 Occupant Notification. During all times that the mall is occupied, the required fire alarm system, once initiated, shall perform one of the following functions:

(1) It shall activate a general alarm in accordance with 55.2.3 throughout the mall, except a positive alarm sequence in accordance with 55.2.3.4 shall be permitted.
(2) It shall activate an alarm signal in a continuously attended location for the purpose of initiating emergency action by personnel trained to respond to emergencies, as follows:
    (a) Emergency action shall be initiated by means of live voice public address system announcements originating from the attended location where the alarm signal is received.
    (b) The live voice public address system shall be permitted to be used for other announcements, provided that the emergency use takes precedence over any other use.

Copyright National Fire Protection Association
Provided by IHS under license with NFPA
No reproduction or networking permitted without license from IHS
Not for Resale

(c) In lieu of live voice public address system announcements, any other occupant notification means shall be permitted by 55.2.3.

27.4.4.10.3.2 Emergency Forces Notification. Emergency forces notification shall be provided and shall include notifying the following:

(1) Fire department in accordance with 55.2.4
(2) Approved local emergency organization, if provided

27.4.4.11 Plastic Signs. Within every store or level, and from sidewall to sidewall of each tenant space facing the mall, plastic signs shall be limited as follows:

(1) Plastic signs shall not exceed 20 percent of the wall area facing the mall.
(2) Plastic signs shall not exceed a height of 36 in. (915 mm), except, if the sign is vertical, the height shall not exceed 8 ft (2440 mm), and the width shall not exceed 36 in. (915 mm).
(3) Plastic signs shall be located a minimum distance of 18 in. (455 mm) from adjacent tenants.
(4) Plastics, other than foamed plastics, shall meet one of the following criteria:
   (a) They shall be light-transmitting plastics.
   (b) They shall have a self-ignition temperature of 650°F (343°C) or greater when tested in accordance with ASTM D 1929, *Standard Test Method for Determining Ignition Temperatures of Plastics*, and a flame spread index not greater than 75 and a smoke developed index not greater than 450 when tested in the manner intended for use in accordance with NFPA 255, *Standard Method of Test of Surface Burning Characteristics of Building Materials*.
(5) The edges and backs of plastic signs in the mall shall be fully encased in metal.
(6) If foamed plastics are used, the sign shall have a maximum heat release rate of 150 kW when tested in accordance with UL 1975, *Standard for Fire Tests for Foamed Plastics Used for Decorative Purposes*, and shall have physical characteristics in accordance with the following:
   (a) The minimum density of foamed plastic signs shall not be less than 20 lb/ft^3 (320 kg/m^3).
   (b) The thickness of foamed plastic signs shall not be greater than ½ in. (13 mm).

27.4.4.12 Kiosks.

27.4.4.12.1 Kiosks and similar structures (temporary or permanent) shall not be considered as tenant spaces and shall be constructed of noncombustible or limited-combustible materials, or of combustible materials meeting any of the following criteria:

(1) Listed fire-retardant-treated wood complying with the requirements of 45.5.15
(2) Light-transmitting plastics complying with Chapter 48
(3) Foamed plastics having a maximum heat release rate not greater than 100 kW when tested in accordance with UL 1975
(4) Metal composite material (MCM) meeting the requirements of Class A interior finish in accordance with Chapter 10 when tested as an assembly in the maximum thickness intended for use
(5) Textiles and films meeting the flame propagation performance criteria contained in NFPA 701, *Standard Methods of Fire Tests for Flame Propagation of Textiles and Films*

27.4.4.12.2 Kiosks or similar structures located within the mall shall be protected with approved fire suppression and detection devices.

27.4.4.12.3 The minimum horizontal separation between kiosks, or groups of kiosks, and other structures within the mall shall be 20 ft (6100 mm).

27.4.4.12.4 Each kiosk, or group of kiosks, or similar structure shall have a maximum area of 300 ft^2 (27.8 m^2).

27.4.5 Bulk Merchandising Retail Buildings. New bulk merchandising retail buildings exceeding 12,000 ft^2 (1115 m^2) in area shall comply with the requirements of this chapter, as modified by 27.4.5.1 through 27.4.5.5.

27.4.5.1 Minimum Story Height. Bulk merchandising retail buildings shall have a distance of not less than 16 ft (4.9 m) from the floor to the ceiling, from the floor to the floor above, or from the floor to the roof of any story.

27.4.5.2 Means of Egress Requirements. All means of egress shall be in accordance with Chapter 11 and this chapter. Not less than 50 percent of the required egress capacity shall be located independent of the main entrance/exit doors.

27.4.5.3 Storage, Arrangement, Protection, and Quantities of Hazardous Commodities. The storage, arrangement, protection, and quantities of hazardous commodities shall be in accordance with the applicable portions of the following:

(1) NFPA 1, *Uniform Fire Code*
(2) NFPA 13, *Standard for the Installation of Sprinkler Systems*
(3) NFPA 30, *Flammable and Combustible Liquids Code*
(4) NFPA 30B, *Code for the Manufacture and Storage of Aerosol Products*
(5) NFPA 430, *Code for the Storage of Liquid and Solid Oxidizers*
(6) NFPA 432, *Code for the Storage of Organic Peroxide Formulations*
(7) NFPA 434, *Code for the Storage of Pesticides*
(8) NFPA 1124, *Code for the Manufacture, Transportation, Storage, and Retail Sales of Fireworks and Pyrotechnic Articles*

27.4.5.4 Detection, Alarm, and Communications Systems.

27.4.5.4.1 General. Bulk merchandising retail buildings shall be provided with a fire alarm system in accordance with Section 55.2.

27.4.5.4.2 Initiation. Initiation of the required fire alarm system shall be by means of the required approved automatic sprinkler system in accordance with 55.2.2(3) and by manual means in accordance with 55.2.2.1.5 and 55.2.2.1.6.

27.4.5.4.3 Occupant Notification. During all times that the building is occupied, the required fire alarm system, once initiated, shall perform one of the following functions:

(1) It shall activate a general alarm in accordance with 55.2.3 throughout the building, except a positive alarm sequence in accordance with 55.2.3.4 shall be permitted.
(2) It shall activate an alarm signal in a continuously attended location for the purpose of initiating emergency action by personnel trained to respond to emergencies as follows:
   (a) Emergency action shall be initiated by means of live voice public address system announcements originating from the attended location where the alarm signal is received.
   (b) The live voice public address system shall be permitted to be used for other announcements, provided

Copyright National Fire Protection Association
Provided by IHS under license with NFPA
No reproduction or networking permitted without license from IHS
Not for Resale

that the emergency use takes precedence over any other use.

(c) In lieu of live voice public address system announcements, any other occupant notification means shall be permitted by 55.2.3.

27.4.5.4.4 Emergency Forces Notification. Emergency forces notification shall be provided and shall include notifying the following:

(1) Fire department in accordance with 55.2.4
(2) Approved local emergency organization, if provided

27.4.5.5 Extinguishment Requirements. Bulk merchandising retail buildings shall be protected throughout by an approved, supervised automatic sprinkler system in accordance with NFPA 13 and 55.3.2 and the applicable provisions of the following:

(1) NFPA 1, *Uniform Fire Code*
(2) NFPA 13, *Standard for the Installation of Sprinkler Systems*
(3) NFPA 30, *Flammable and Combustible Liquids Code*
(4) NFPA 30B, *Code for the Manufacture and Storage of Aerosol Products*

27.4.6 Retail Sales of Consumer Fireworks, 1.4G. Mercantile occupancies where the retail sales of consumer fireworks, 1.4G are conducted shall comply with NFPA 1124.

27.5 Building Services.

27.5.1 Utilities. Utilities shall comply with the provisions of Chapters 49, 52, and 53.

27.5.2 Heating, Ventilating, and Air-Conditioning. Heating, ventilating, and air-conditioning equipment shall comply with the provisions of Chapters 50 and 51.

27.5.3 Elevators, Escalators, and Conveyors. Elevators, escalators, and conveyors shall comply with the provisions of Chapter 54.

27.5.4 Rubbish Chutes, Incinerators, and Laundry Chutes. Rubbish chutes, incinerators, and laundry chutes shall comply with the provisions of Section 8.17.

27.6 Reserved.

Chapter 28 Business Occupancies

28.1 General Requirements.

28.1.1 Application.

28.1.1.1 The requirements of this chapter shall apply to the following:

(1) New buildings or portions thereof used as business occupancies
(2) Additions made to, or used as, a business occupancy
(3)*Alterations, modernizations, or renovations of existing business occupancies
(4) Existing buildings, or portions thereof, upon change of occupancy to a business occupancy

28.1.1.2 Repairs, renovations, modifications, additions, and reconstruction of a business occupancy, and changes of use, including change of occupancy classification to a business occupancy, or correction of a damaged or unsafe portion of the building containing the business occupancy, shall comply with one of the following:

(1) Provisions of this chapter
(2) Provisions of Chapter 15

28.1.1.3 This chapter shall establish requirements for all buildings or portions thereof used as business occupancies.

28.1.2 Multiple Occupancies.

28.1.2.1 General. All multiple occupancies shall be in accordance with Section 6.2 and 28.1.2. Where there are differences in the specific requirements in this chapter and provisions for mixed occupancies or separated occupancies as specified in 6.2.3 and 6.2.4, the requirements of this chapter shall apply. *(See 4.3.2.3.)*

28.1.2.2 Combined Business Occupancies and Parking Structures.

28.1.2.2.1 The wall separating a parking structure from a building classified as a business occupancy shall be a fire barrier having a fire resistance rating of not less than 2 hours.

28.1.2.2.2 Openings in the fire barrier shall not be required to be protected with fire protection–rated opening protectives in enclosed parking structures that are protected throughout by an approved, supervised automatic sprinkler system in accordance with Section 55.3 and 55.3.2, or in open parking structures, provided that all of the following conditions are met:

(1) The openings do not exceed 25 percent of the area of the fire barrier in which they are located.
(2) The openings are used as a public entrance and for associated sidelight functions.
(3) The buildings containing the business occupancy are protected throughout by an approved, supervised automatic sprinkler system in accordance with Section 55.3 and 55.3.2.
(4)*Means are provided to prevent spilled fuel from accumulating adjacent to the openings and entering the building.
(5) Physical means are provided to prevent vehicles from being parked or driven within 10 ft (3050 mm) of the openings.
(6) The openings are protected as required for a smoke partition in accordance with Section 8.10, with no minimum fire protection rating required.

28.1.3 Classification of Occupancy. Business occupancies shall include all buildings and structures, or parts thereof, with business occupancy, as defined in 6.1.11.

28.1.4 Classification of Hazard of Contents.

28.1.4.1 Hazard of contents shall be classified in accordance with 6.3.2.

28.1.4.2 Buildings or areas in which high hazard contents are stored, used, or handled shall comply with Chapter 34.

28.1.5 Minimum Construction Requirements. Construction types and height and area requirements shall be in accordance with all of the following:

(1) Chapter 7, Construction Types and Height and Area Requirements
(2) Chapter 8, Fire-Resistive Materials and Construction
(3) Chapter 13, Encroachments into the Public Right-of-Way
(4) Chapter 14, Safeguards During Construction
(5) Chapter 31, Occupancies in Special Structures
(6) Chapter 35, Structural Design
(7) Chapter 36, Soils, Foundations, and Retaining Walls
(8) Chapter 37, Exterior Wall Construction
(9) Chapter 38, Roof Assemblies and Roof Structures

Copyright National Fire Protection Association
Provided by IHS under license with NFPA
No reproduction or networking permitted without license from IHS
Not for Resale

(10) Chapter 39, Flood-Resistant Design and Construction
(11) Chapter 40, Quality Assurance During Construction

28.1.6 Occupant Load. The occupant load, in number of persons for whom means of egress and other provisions are required, shall be determined on the basis of the occupant load factors of Table 11.3.1.2 that are characteristic of the use of the space, or shall be determined as the maximum probable population of the space under consideration, whichever is greater.

28.1.7 Accessibility. Accessibility shall be in accordance with Chapter 12.

28.2 Means of Egress Requirements.

28.2.1 General.

28.2.1.1 All means of egress shall be in accordance with Chapter 11 and this chapter.

28.2.1.2 If, owing to differences in grade, any street floor exits are located at points above or below the street or ground level, such exits shall comply with the provisions for exits from upper floors or floors below the street floor.

28.2.1.3 Multiple floors shall comply with 28.2.1.3.1 and 28.2.1.3.2.

28.2.1.3.1 Where two or more floors below the street floor are occupied for business use, the same stairs or ramps shall be permitted to serve each floor.

28.2.1.3.2 An open stairway or inside open ramp shall be permitted to serve as a component of the required means of egress system from not more than one floor level below the street floor.

28.2.1.4 Floor levels below the street floor used only for storage, heating, and other service equipment, and not subject to business occupancy, shall have means of egress in accordance with Chapter 30.

28.2.2 Means of Egress Components.

28.2.2.1 General. Means of egress components shall be limited to the types described in 28.2.2.2 through 28.2.2.12.

28.2.2.2 Doors.

28.2.2.2.1 Doors complying with 11.2.1 shall be permitted.

28.2.2.2.2* Locks complying with 11.2.1.5.5 shall be permitted only on principal entrance/exit doors.

28.2.2.2.3 Reserved.

28.2.2.2.4 Delayed-egress locks complying with 11.2.1.6.1 shall be permitted.

28.2.2.2.5 Access-controlled egress doors complying with 11.2.1.6.2 shall be permitted.

28.2.2.2.6 Where horizontal or vertical security grilles or doors are used as part of the required means of egress from a tenant space, such grilles or doors shall comply with 11.2.1.4.1.3.

28.2.2.2.7 Reserved.

28.2.2.2.8 Revolving doors complying with 11.2.1.10 shall be permitted.

28.2.2.3 Stairs.

28.2.2.3.1 Stairs complying with 11.2.2 shall be permitted.

28.2.2.3.2 Spiral stairs complying with 11.2.2.2.3 shall be permitted.

28.2.2.4 Smokeproof Enclosures. Smokeproof enclosures complying with 11.2.3 shall be permitted.

28.2.2.5 Horizontal Exits. Horizontal exits complying with 11.2.4 shall be permitted.

28.2.2.6 Ramps. Ramps complying with 11.2.5 shall be permitted.

28.2.2.7 Exit Passageways. Exit passageways complying with 11.2.6 shall be permitted.

28.2.2.8 Reserved.

28.2.2.9 Reserved.

28.2.2.10 Fire Escape Ladders. Fire escape ladders complying with 11.2.9 shall be permitted.

28.2.2.11 Alternating Tread Devices. Alternating tread devices complying with 11.2.11 shall be permitted.

28.2.2.12 Areas of Refuge.

28.2.2.12.1 Areas of refuge complying with 11.2.12 shall be permitted.

28.2.2.12.2 In buildings protected throughout by an approved, supervised automatic sprinkler system in accordance with NFPA 13, *Standard for the Installation of Sprinkler Systems*, and 55.3.2, two rooms or spaces separated from each other by smoke-resistant partitions in accordance with the definition of area of refuge shall not be required. *(See 3.3.34, Area of Refuge.)*

28.2.3 Capacity of Means of Egress.

28.2.3.1 The capacity of means of egress shall be in accordance with Section 11.3.

28.2.3.2* The clear width of any corridor or passageway serving an occupant load of 50 or more shall be not less than 44 in. (1120 mm).

28.2.3.3 Street floor exits shall be sufficient for the occupant load of the street floor plus the required capacity of stairs and ramps discharging through the street floor.

28.2.4 Number of Exits.

28.2.4.1 Exits shall comply with the following, except as otherwise permitted by 28.2.4.2 through 28.2.4.6:

(1) The number of means of egress shall be in accordance with Section 11.4.
(2) Not less than two separate exits shall be provided on every story.
(3) Not less than two separate exits shall be accessible from every part of every story.

28.2.4.2 Exit access as required by 28.2.4.1(3) shall be permitted to include a single exit access path for the distances permitted as common paths of travel by 28.2.5.3.

28.2.4.3 A single exit shall be permitted for a room or area with a total occupant load of fewer than 100 persons, provided that the following criteria are met:

(1) The exit shall discharge directly to the outside at the level of exit discharge for the building.
(2) The total distance of travel from any point, including travel within the exit, shall not exceed 100 ft (30 m).

Copyright National Fire Protection Association
Provided by IHS under license with NFPA
No reproduction or networking permitted without license from IHS
Not for Resale

(3) The total distance of travel specified in 28.2.4.3(2) shall be on the same floor level, or, if traversing of stairs is necessary, such stairs shall not exceed 15 ft (4570 mm) in height, and the stairs shall be provided with complete enclosures to separate them from any other part of the building, with no door openings therein.
(4) A single outside stair in accordance with 11.2.2 shall be permitted to serve all floors permitted within the 15 ft (4570 mm) vertical travel limitation.

28.2.4.4 Any business occupancy not exceeding 3 stories, and not exceeding an occupant load of 30 people per floor, shall be permitted a single separate exit to each floor, provided that the following criteria are met:

(1) The total travel distance to the outside of the building shall not exceed 100 ft (30 m).
(2) The exit shall be enclosed in accordance with 11.1.3.2, shall serve no other levels, and shall discharge directly to the outside.
(3) A single outside stair in accordance with 11.2.2 shall be permitted to serve all floors.

28.2.4.5 A single means of egress shall be permitted from a mezzanine within a business occupancy, provided that the common path of travel does not exceed 75 ft (23 m), or 100 ft (30 m) if protected throughout by an approved, supervised automatic sprinkler system in accordance with NFPA 13 and 55.3.2.

28.2.4.6 A single exit shall be permitted for a maximum 2-story, single-tenant space/building protected throughout by an approved, supervised automatic sprinkler system in accordance with NFPA 13 and 55.3.2 where the total travel to the outside does not exceed 100 ft (30 m).

28.2.5 Arrangement of Means of Egress.

28.2.5.1 General. Means of egress shall be arranged in accordance with Section 11.5.

28.2.5.2 Dead Ends. Dead ends shall be permitted in accordance with 28.2.5.2.1 or 28.2.5.2.2.

28.2.5.2.1 In buildings protected throughout by an approved, supervised automatic sprinkler system in accordance with NFPA 13 and 55.3.2, dead-end corridors shall not exceed 50 ft (15 m).

28.2.5.2.2 In buildings other than those specified in 28.2.5.2.1, dead-end corridors shall not exceed 20 ft (6100 mm).

28.2.5.3 Common Paths of Travel.

28.2.5.3.1 A common path of travel shall be permitted for the first 100 ft (30 m) in a building protected throughout by an approved, supervised automatic sprinkler system in accordance with NFPA 13 and 55.3.2.

28.2.5.3.2 A common path of travel shall be permitted for the first 100 ft (30 m) within a single tenant space having an occupant load not exceeding 30 persons.

28.2.5.3.3 In buildings other than those specified in 28.2.5.3.2, the common paths of travel shall not exceed 75 ft (23 m).

28.2.6 Travel Distance to Exits.

28.2.6.1 In buildings protected throughout by an approved, supervised automatic sprinkler system in accordance with NFPA 13 and 55.3.2, the travel distance shall not exceed 300 ft (91 m).

28.2.6.2 In buildings other than those specified in 28.2.6.1, the travel distance to exits, measured in accordance with Section 11.6, shall not exceed 200 ft (61 m).

28.2.7 Discharge from Exits. Exit discharge shall comply with Section 11.7.

28.2.8 Illumination of Means of Egress. Means of egress shall be illuminated in accordance with Section 11.8.

28.2.9 Emergency Lighting.

28.2.9.1 Emergency lighting shall be provided in accordance with Section 11.9 in any building where any one of the following conditions exists:

(1) The building is 2 or more stories in height above the level of exit discharge.
(2) The occupancy is subject to 50 or more occupants above or below the level of exit discharge.
(3) The occupancy is subject to 300 or more total occupants.

28.2.9.2 Emergency lighting in accordance with Section 11.9 shall be provided for all underground and limited access structures.

28.2.10 Marking of Means of Egress. Means of egress shall have signs in accordance with Section 11.10.

28.2.11 Special Means of Egress Features.

28.2.11.1 Reserved.

28.2.11.2 Lockups. Lockups in business occupancies shall comply with the requirements of 21.4.5.

28.3 Protection.

28.3.1 Protection of Vertical Openings.

28.3.1.1 Any vertical opening shall comply with 28.3.1.1.1 and 28.3.1.1.2.

28.3.1.1.1 Any vertical opening shall be enclosed or protected in accordance with Section 8.12. Unenclosed vertical openings in accordance with 8.12.4.2 shall be permitted.

28.3.1.1.2 Exit access stairs shall be permitted to be unenclosed in two-story, single-tenant spaces that are provided with a single exit in accordance with 28.2.4.6.

28.3.1.2 Floors below the street floor used for storage or other than business occupancy shall have no unprotected openings to business occupancy floors.

28.3.2 Hazardous Area Protection.

28.3.2.1* General. Hazardous areas including, but not limited to, areas used for general storage, boiler or furnace rooms, and maintenance shops that include woodworking and painting areas shall be protected in accordance with Section 8.15.

28.3.2.2* Commercial Cooking Facilities. Commercial cooking facilities shall be protected in accordance with Section 55.10, unless the cooking equipment is one of the following types:

(1) Outdoor equipment
(2) Portable equipment not flue connected
(3) Equipment used only for food warming

28.3.3 Interior Finish.

28.3.3.1 General. Interior finish shall be in accordance with Chapter 10.

--`,,```,,,,````-`-`,,`,,`,`,,`---

Copyright National Fire Protection Association
Provided by IHS under license with NFPA
No reproduction or networking permitted without license from IHS
Not for Resale

28.3.3.2 Interior Wall and Ceiling Finish. Interior wall and ceiling finish materials shall be Class A or Class B in exits and in enclosed corridors furnishing access to exits; and Class A, Class B, or Class C in office areas.

28.3.3.3 Interior Floor Finish.

28.3.3.3.1 Interior floor finish shall comply with Section 10.6.

28.3.3.3.2 Interior floor finish in exit enclosures shall be not less than Class II.

28.3.3.3.3 Interior floor finish shall comply with 10.6.1 or 10.6.2, as applicable.

28.3.4 Detection, Alarm, and Communications Systems.

28.3.4.1 General. A fire alarm system in accordance with Section 55.2 shall be provided in any business occupancy where any one of the following conditions exists:

(1) The building is 2 or more stories in height above the level of exit discharge.
(2) The occupancy is subject to 50 or more occupants above or below the level of exit discharge.
(3) The occupancy is subject to 300 or more total occupants.

28.3.4.2 Initiation. Initiation of the required fire alarm system shall be by any one of the following:

(1) Manual means in accordance with 55.2.2(1)
(2) Approved automatic fire detection system in accordance with 55.2.2(2) that provides protection throughout the building and in accordance with 55.2.2.1.5
(3) Approved, supervised automatic sprinkler system complying with NFPA 13 and 55.3.2 in accordance with 55.2.2(3) that provides protection throughout the building and in accordance with 55.2.2.1.5

28.3.4.3 Notification.

28.3.4.3.1 Occupant Notification. During all times that the building is occupied, the required fire alarm system, once initiated, shall perform one of the following functions:

(1) It shall activate an alarm in accordance with 55.2.3 throughout the business occupancy, except a positive alarm sequence in accordance with 55.2.3.4 shall be permitted.
(2) It shall activate an alarm signal in a continuously attended location for the purpose of initiating emergency action by personnel trained to respond to emergencies as follows:
    (a) Emergency action shall be initiated by means of live voice public address system announcements originating from the attended location where the alarm signal is received.
    (b) The live voice public address system shall be permitted to be used for other announcements, provided that the emergency use takes precedence over any other use.
    (c) In lieu of live voice public address system announcements, any other occupant notification means in accordance with 55.2.3 shall be permitted.

28.3.4.3.2 Emergency Forces Notification. Emergency forces notification shall be provided and shall include notifying the following:

(1) Fire department in accordance with 55.2.4
(2) Approved local emergency organization, if provided

28.3.5 Extinguishment Requirements.

28.3.5.1 Portable fire extinguishers shall be provided in every business occupancy in accordance with Section 55.6.

28.3.5.2 Class 1 standpipe systems shall be provided when required by 55.4.1.

28.3.6 Corridors.

28.3.6.1* Where access to exits is provided by corridors, such corridors shall be separated from use areas by walls having a fire resistance rating of not less than 1 hour in accordance with Section 8.4, unless one of the following conditions exists:

(1) Where exits are available from an open floor area
(2) Within a space occupied by a single tenant
(3) Within buildings protected throughout by an approved, supervised automatic sprinkler system in accordance with NFPA 13 and 55.3.2

28.3.6.2 Openings in corridor walls required by 28.3.6.1 to have a fire resistance rating shall be protected in accordance with Table 8.7.2.

28.3.7 Subdivision of Building Spaces.

28.3.7.1 Partitions within office spaces occupied by a single tenant shall be permitted to be of partial height, movable or nonpermanent, in locations where partitions are not required to have a fire resistance rating using any material permitted by this *Code* for any construction types, provided that such partitions comply with all the following:

(1) They shall not enclose a hazardous area.
(2) Combustible materials used in prefabricated nonpermanent partitions shall have a Class C rating when tested as a composite assembly in the form intended for use, including any trim exceeding the limits specified in Section 18.2 of UL 1286, *Standard for Office Furnishings*.
(3) Trim not exceeding the specified limits of Section 18.2 of UL 1286 shall be tested in accordance with Section 18.4 or 18.5 of UL 1286 and shall meet the requirements specified herein.

28.4 Special Provisions.

28.4.1 Underground or Limited Access Structure. Underground or limited access structures shall be in accordance with Section 31.2 and Section 31.3.

28.4.2* High-Rise Buildings. High-rise buildings shall comply with Chapter 33.

28.5 Building Services.

28.5.1 Utilities. Utilities shall comply with the provisions of Chapters 49, 52, and 53.

28.5.2 Heating, Ventilating, and Air-Conditioning. Heating, ventilating, and air-conditioning equipment shall comply with the provisions of Chapters 50 and 51.

28.5.3 Elevators, Escalators, and Conveyors. Elevators, escalators, and conveyors shall comply with the provisions of Chapter 54.

28.5.4 Rubbish Chutes, Incinerators, and Laundry Chutes. Rubbish chutes, incinerators, and laundry chutes shall comply with the provisions of Section 8.17.

Copyright National Fire Protection Association
Provided by IHS under license with NFPA
No reproduction or networking permitted without license from IHS
Not for Resale

Chapter 29 Industrial Occupancies

29.1 General Requirements.

29.1.1 Application.

29.1.1.1* The requirements of this chapter shall apply to new buildings or portions thereof used as an industrial occupancy.

29.1.1.2 Repairs, renovations, modifications, additions, and reconstruction of an industrial occupancy, and changes of use, including change of occupancy classification to an industrial occupancy, or correction of a damaged or unsafe portion of the building containing the industrial occupancy, shall comply with one of the following:

(1) Provisions of this chapter
(2) Provisions of Chapter 15

29.1.2 Multiple Occupancies. All multiple occupancies shall be in accordance with Section 6.2 and 29.1.2. Where there are differences in the specific requirements in this chapter and provisions for mixed occupancies or separated occupancies as specified 6.2.3 and 6.2.4, the requirements of this chapter shall apply. *(See 4.3.2.3.)*

29.1.3 Classification of Occupancy. Classification of occupancy shall be in accordance with 6.1.12.

29.1.3.1 Subclassification of Occupancy. Each industrial occupancy shall be subclassified according to its use as described in 29.1.3.1.1 and 29.1.3.1.2.

29.1.3.1.1 General Industrial Occupancy. General industrial occupancies shall include the following:

(1) Industrial occupancies that conduct ordinary and low hazard industrial operations in buildings of conventional design that are usable for various types of industrial processes
(2) Industrial occupancies that include multistory buildings where floors are occupied by different tenants or buildings that are usable for such occupancy and, therefore, are subject to possible use for types of industrial processes with a high density of employee population

29.1.3.1.2 Special-Purpose Industrial Occupancy. Special-purpose industrial occupancies shall include the following:

(1) Industrial occupancies that conduct ordinary and low hazard industrial operations in buildings designed for, and that are usable only for, particular types of operations
(2) Industrial occupancies that are characterized by a relatively low density of employee population, with much of the area occupied by machinery or equipment

29.1.3.2 Incidental Operations. Incidental high hazard operations in low or ordinary hazard occupancies that are protected in accordance with Section 8.15 and 29.3.2 shall not be the basis for overall occupancy classification.

29.1.3.3 Change of Subclassification. A change from one subclassification of industrial occupancy to another shall be permitted only if the structure, building, or portion thereof conforms with the requirements of this chapter applying to new construction for the new use.

29.1.4 Classification of Hazard of Contents.

29.1.4.1 Hazard of contents shall be classified in accordance with 6.3.2.

29.1.4.2 Buildings or areas in which high hazard contents are stored, used, or handled shall comply with Chapter 34.

29.1.5 Minimum Construction Requirements. Construction shall be in accordance with all of the following:

(1) Chapter 7, Construction Types and Height and Area Requirements
(2) Chapter 8, Fire-Resistive Materials and Construction
(3) Chapter 13, Encroachments into the Public Right-of-Way
(4) Chapter 14, Safeguards During Construction
(5) Chapter 31, Occupancies in Special Structures
(6) Chapter 35, Structural Design
(7) Chapter 36, Soils, Foundations, and Retaining Walls
(8) Chapter 37, Exterior Wall Construction
(9) Chapter 38, Roof Assemblies and Roof Structures
(10) Chapter 39, Flood-Resistant Design and Construction
(11) Chapter 40, Quality Assurance During Construction

29.1.6* Occupant Load. The occupant load, in number of persons for whom means of egress and other provisions are required, shall be determined on the basis of the occupant load factors of Table 11.3.1.2 that are characteristic of the use of the space, or shall be determined as the maximum probable population of the space under consideration, whichever is greater.

29.1.7 Accessibility. Accessibility shall be in accordance with Chapter 12.

29.2 Means of Egress Requirements. Each required means of egress shall be in accordance with the applicable portions of Chapter 11.

29.2.1* Utility Chases. Normally unoccupied utility chases that are secured from unauthorized access and are used exclusively for routing of electrical, mechanical, or plumbing equipment shall not be required to comply with the provisions of Chapter 11.

29.2.2 Means of Egress Components.

29.2.2.1 General. Components of means of egress shall be limited to the types described in 29.2.2.2 through 29.2.2.12.

29.2.2.2 Doors.

29.2.2.2.1 Doors complying with 11.2.1 shall be permitted.

29.2.2.2.2 Delayed-egress locks complying with 11.2.1.6.1 shall be permitted.

29.2.2.2.3 Access-controlled egress doors complying with 11.2.1.6.2 shall be permitted.

29.2.2.3 Stairs.

29.2.2.3.1 Stairs shall comply with 11.2.2 and shall be permitted to be modified as follows:

(1) Noncombustible, grated stair treads and noncombustible, grated landing floors shall be permitted.
(2) Industrial equipment access in accordance with 29.2.5.3 shall be permitted.

29.2.2.3.2 Spiral stairs complying with 11.2.2.2.3 shall be permitted.

29.2.2.4 Smokeproof Enclosures. Smokeproof enclosures complying with 11.2.3 shall be permitted.

29.2.2.5 Horizontal Exits.

29.2.2.5.1 Horizontal exits complying with 11.2.4 shall be permitted.

Copyright National Fire Protection Association
Provided by IHS under license with NFPA
No reproduction or networking permitted without license from IHS
Not for Resale

29.2.2.5.2* In horizontal exits, where the opening is protected by a fire door assembly on each side of the wall in which it is located, one fire door shall be of the swinging type, as provided in 11.2.4.3.7, and the other shall be permitted to be an automatic-sliding fire door that shall be kept open whenever the building is occupied.

29.2.2.6 Ramps. Ramps complying with any of the following shall be permitted:

(1) Ramps in accordance with 11.2.5
(2) Industrial equipment access in accordance with 29.2.5.3

29.2.2.7 Exit Passageways. Exit passageways complying with 11.2.6 shall be permitted.

29.2.2.8 Reserved.

29.2.2.9 Fire Escape Ladders. Fire escape ladders in accordance with 11.2.9 shall be permitted.

29.2.2.9.1 Fixed industrial stairs in accordance with the minimum requirements for fixed stairs in ANSI A1264.1, *Safety Requirements for Workplace Floor and Wall Openings, Stairs and Railing Systems*, shall be permitted where fire escape ladders are permitted in accordance with 11.2.9.1.

29.2.2.10 Slide Escapes. Approved slide escapes complying with 11.2.10 shall be permitted as components in 100 percent of the required means of egress for high hazard industrial occupancies.

29.2.2.11 Alternating Tread Devices. Alternating tread devices complying with 11.2.11 shall be permitted.

29.2.2.12 Areas of Refuge. Areas of refuge complying with 11.2.12 shall be permitted.

29.2.3 Capacity of Means of Egress. The capacity of means of egress shall comply with either of the following:

(1) The capacity of means of egress shall be in accordance with Section 11.3.
(2) In special-purpose industrial occupancies, means of egress shall be sized to accommodate the occupant load as determined in accordance with Table 11.3.1.2, and spaces not subject to human occupancy because of the presence of machinery or equipment shall not be included.

29.2.4 Number of Means of Egress.

29.2.4.1 The number of means of egress shall comply with 29.2.4.1.1 or 29.2.4.1.2.

29.2.4.1.1 Not less than two means of egress shall be provided from every story or section, and not less than one exit shall be reached without traversing another story.

29.2.4.1.2 A single means of egress shall be permitted from any story or section in low and ordinary hazard industrial occupancies, provided that the exit can be reached within the distance permitted as common path of travel.

29.2.4.2 Floors, or portions thereof, with an occupant load of more than 500 shall have the minimum number of separate and remote means of egress as specified by 11.4.1.2.

29.2.5 Arrangement of Means of Egress.

29.2.5.1 General. Means of egress shall be arranged in accordance with Section 11.5 and shall not exceed that provided by Table 29.2.5.1.

Table 29.2.5.1 Arrangement of Means of Egress

	Industrial Occupancy		Low Hazard Industrial Occupancy	
Arrangement	**ft**	**m**	**ft**	**m**
Dead-End Corridor Limits				
Protected throughout by an approved, supervised automatic sprinkler system in accordance with NFPA 13 and 55.3.2	50	15	50	15
Not protected throughout by an approved, supervised automatic sprinkler system in accordance with NFPA 13 and 55.3.2	50	15	50	15
Common Path of Travel Limits				
Protected throughout by an approved, supervised automatic sprinkler system in accordance with NFPA 13 and 55.3.2	100	30	100	30
Not protected throughout by an approved, supervised automatic sprinkler system in accordance with NFPA 13 and 55.3.2	50	15	50	15

Copyright National Fire Protection Association
Provided by IHS under license with NFPA
No reproduction or networking permitted without license from IHS
Not for Resale

29.2.5.2 Ancillary Facilities.

29.2.5.2.1* Ancillary facilities shall be arranged to allow travel in independent directions after leaving the ancillary facility so that both means of egress paths do not become compromised by the same fire or similar emergency.

29.2.5.2.2* Ancillary facilities in special-purpose industrial occupancies, where delayed evacuation is anticipated, shall have not less than a 2-hour fire resistance–rated separation from the predominant industrial occupancy and shall have one means of egress that is separated from the predominant industrial occupancy by 2-hour fire resistance–rated construction.

29.2.5.3 Industrial Equipment Access. Access doors for industrial equipment and industrial equipment access walkways, platforms, ramps, and stairs that serve as a component of the means of egress from the involved equipment shall meet the following criteria:

(1) They shall be permitted in accordance with the applicable provisions of Chapter 11, as modified by Table 29.2.5.3.
(2) They shall serve not more than 20 people.

Table 29.2.5.3 Industrial Equipment Access Dimensional Criteria

Component	Dimension
Minimum horizontal dimension of any walkway, landing, or platform	22 in. (560 mm) clear
Minimum stair or ramp width	22 in. (560 mm) clear between rails
Minimum tread width	22 in. (560 mm) clear
Minimum tread depth	10 in. (255 mm)
Maximum riser height*	9 in. (230 mm)
Maximum height between landings	12 ft (3660 mm)
Minimum headroom	6 ft 8 in. (2030 mm)
Minimum clear width of door openings	22 in. (560 mm) clear

*Handrails are permitted to terminate, at the required height, at a point directly above the top and bottom risers.

29.2.6* Travel Distance to Exits. Travel distance, measured in accordance with Section 11.6, shall not exceed that provided by Table 29.2.6.

29.2.6.1* Power-Generation Buildings. Buildings of Type I or Type II construction used exclusively for the enclosure of steam generators, steam turbines, gas turbines, heat recovery generators, and flue gas treatment equipment, with special hazards protected by approved automatic suppression systems in accordance with NFPA 11, *Standard for Low-, Medium-, and High-Expansion Foam*, NFPA 12, *Standard on Carbon Dioxide Extinguishing Systems*, NFPA 13, *Standard for the Installation of Sprinkler Systems*, NFPA 15, *Standard for Water Spray Fixed Systems for Fire Protection*, NFPA 16, *Standard for the Installation of Foam-Water Sprinkler and Foam-Water Spray Systems*, NFPA 17, *Standard for Dry Chemical Extinguishing Systems*, NFPA 750, *Standard on Water Mist Fire Protection Systems*, or NFPA 2001, *Standard on Clean Agent Fire Extinguishing Systems*, shall be permitted to have a maximum travel distance of 400 ft (122 m).

Table 29.2.6 Maximum Travel Distance to Exits

	General Industrial Occupancy		Special-Purpose Industrial Occupancy	
Arrangement	ft	m	ft	m
Protected throughout by an approved, supervised automatic sprinkler system in accordance with NFPA 13 and 55.3.2	250*	76*	400	122
Not protected throughout by an approved, supervised automatic sprinkler system in accordance with NFPA 13 and 55.3.2	200	60	300	91

*In single-story buildings, a travel distance of 400 ft (122 m) is permitted, provided that a performance-based analysis demonstrates that safe egress can be accomplished.

29.2.7 Discharge from Exits. Discharge from exits shall be in accordance with Section 11.7.

29.2.8 Illumination of Means of Egress. Means of egress shall be illuminated in accordance with Section 11.8 or with natural lighting that provides the required level of illumination in structures occupied only during daylight hours.

29.2.9* Emergency Lighting.

29.2.9.1 Emergency lighting shall be provided in accordance with Section 11.9.

29.2.9.2 Emergency lighting shall not be required for the following:

(1) Special-purpose industrial occupancies without routine human habitation
(2) Structures occupied only during daylight hours, with skylights or windows arranged to provide the required level of illumination on all portions of the means of egress during such hours

29.2.10 Marking of Means of Egress. Means of egress shall have signs in accordance with Section 11.10.

29.2.11 Special Means of Egress Features.

29.2.11.1 Reserved.

29.2.11.2 Lockups. Lockups in industrial occupancies shall comply with the requirements of 21.4.5.

29.3 Protection.

29.3.1 Protection of Vertical Openings. Any vertical opening shall be protected in accordance with one of the following:

Copyright National Fire Protection Association
Provided by IHS under license with NFPA
No reproduction or networking permitted without license from IHS
Not for Resale

(1) Openings shall be in accordance with Section 8.12.
(2) In special-purpose industrial and high hazard industrial occupancies, where unprotected vertical openings exist and are necessary to manufacturing operations, such openings shall be permitted beyond the specified limits only where every floor level has direct access to one or more enclosed stairs or other exits protected against obstruction by any fire or smoke in the open areas connected by the unprotected vertical openings.
(3) Openings in accordance with 8.12.4.2 shall be permitted.

29.3.2 Hazardous Area Protection. Hazardous areas in industrial occupancies protected by approved automatic extinguishing systems in accordance with Section 55.3 shall be exempt from the smoke-resisting enclosure requirement of 8.15.2.

29.3.3 Interior Finish.

29.3.3.1 General. Interior finish shall be in accordance with Chapter 10.

29.3.3.2 Interior Wall and Ceiling Finish. Interior wall and ceiling finish materials shall be Class A, Class B, or Class C in operating areas and shall be as required by 11.1.4 in exit enclosures.

29.3.3.3 Interior Floor Finish.

29.3.3.3.1 Interior floor finish in exit enclosures and exit access corridors shall be not less than Class II.

29.3.3.3.2 Interior floor finish in areas other than exit enclosures and exit access corridors shall not be required to comply with Section 10.6.

29.3.4 Detection, Alarm, and Communications Systems.

29.3.4.1 General. A fire alarm system shall be required in accordance with Section 55.2 for industrial occupancies, unless the total capacity of the building is under 100 persons and fewer than 25 persons are above or below the level of exit discharge.

29.3.4.2 Initiation. Initiation of the required fire alarm system shall be by any one of the following:

(1) Manual means in accordance with 55.2.2(1)
(2) Approved automatic fire detection system in accordance with 55.2.2(2) throughout the building and in accordance with 55.2.2.1.5
(3) Approved, supervised automatic sprinkler system complying with Section 55.3 and 55.3.2 and in accordance with 55.2.2(3) throughout the building and in accordance with 55.2.2.1.5

29.3.4.3 Notification.

29.3.4.3.1 The required fire alarm system shall meet one of the following criteria:

(1) It shall provide occupant notification in accordance with 55.2.3.
(2) It shall sound an audible and visible signal in a constantly attended location for the purposes of initiating emergency action.

29.3.4.3.2 Positive alarm sequence in accordance with 55.2.3.4 shall be permitted.

29.3.5* Extinguishment Requirements.

29.3.5.1 Fire Sprinklers.

29.3.5.1.1 General. Industrial occupancies, other than low hazard industrial occupancies, shall be protected by an approved automatic sprinkler system in accordance with NFPA 13 as follows:

(1) Throughout all industrial occupancies three or more stories in height
(2) Throughout all industrial occupancies exceeding 12,000 ft^2 (1115 m^2) in fire area
(3) Where the total area of all floors, including mezzanines, exceeds 24,000 ft^2 (2230 m^2)

29.3.5.1.2 Woodworking Operations. An approved automatic fire sprinkler system shall be installed in buildings containing woodworking operations exceeding 2500 ft^2 (232 m^2) that use equipment, machinery, or appliances, that generate finely divided combustible waste, or that use finely divided combustible materials.

29.3.5.1.3* Power-Generation Buildings. In lieu of providing sprinkler protection throughout in accordance with 29.3.5.1, buildings of Type I or Type II construction used exclusively for the enclosure of steam generators, steam turbines, gas turbines, heat recovery generators, and flue gas treatment equipment shall not be required to be sprinklered throughout, provided that the special hazards are protected by approved automatic suppression systems in accordance with NFPA 11, *Standard for Low-, Medium-, and High-Expansion Foam*, NFPA 12, *Standard on Carbon Dioxide Extinguishing Systems*, NFPA 13, *Standard for the Installation of Sprinkler Systems*, NFPA 15, *Standard for Water Spray Fixed Systems for Fire Protection*, NFPA 16, *Standard for the Installation of Foam-Water Sprinkler and Foam-Water Spray Systems*, NFPA 17, *Standard for Dry Chemical Extinguishing Systems*, NFPA 750, *Standard on Water Mist Fire Protection Systems*, or NFPA 2001, *Standard on Clean Agent Fire Extinguishing Systems*.

29.3.5.1.4 Waterflow Alarms. Waterflow alarms shall be monitored in accordance with 55.3.2.2.

29.3.5.2 Standpipes. Standpipes shall be provided when required by Section 55.4.1.

29.3.5.3 Portable Fire Extinguishers. Portable fire extinguishers shall be installed in all industrial occupancies in accordance with NFPA 1, *Uniform Fire Code*.

29.3.6 Corridors. The provisions of 11.1.3.1 shall not apply.

29.4 Special Provisions.

29.4.1 Limited Access or Underground Structures. Limited access or underground structures shall comply with Chapter 31.

29.4.2 High-Rise Buildings. The automatic sprinkler requirements of 33.2.2 shall be required for industrial occupancies, except for low hazard industrial occupancies.

29.5 Building Services.

29.5.1 Utilities. Utilities shall comply with the provisions of Chapters 49, 52, and 53.

29.5.2 Heating, Ventilating, and Air-Conditioning. Heating, ventilating, and air-conditioning equipment shall comply with the provisions of Chapters 50 and 51.

29.5.3 Elevators, Escalators, and Conveyors. Elevators, escalators, and conveyors shall comply with the provisions of Chapter 54.

29.5.4 Rubbish Chutes, Incinerators, and Laundry Chutes. Rubbish chutes, incinerators, and laundry chutes shall comply with the provisions of Section 8.17.

Copyright National Fire Protection Association
Provided by IHS under license with NFPA
No reproduction or networking permitted without license from IHS
Not for Resale

29.6* Special Provisions for Aircraft-Servicing Hangars.

29.6.1 The requirements of Sections 29.1 through 29.5 shall be met, except as modified by 29.6.2 through 29.6.4.

29.6.2 The requirements for exits from aircraft-servicing areas shall be as noted in 29.6.2.1 through 29.6.2.4.

29.6.2.1 Exits from aircraft-servicing areas shall be provided at intervals not exceeding 150 ft (45 m) on all exterior walls.

29.6.2.2 There shall be not less than two means of egress from each aircraft-servicing area.

29.6.2.3 If provided, horizontal exits shall be located at intervals not exceeding 100 ft (30 m).

29.6.2.4 If provided, dwarf, or "smash," doors used in doors that accommodate aircraft shall be permitted for compliance with the requirements of 29.6.1 through 29.6.2.3.

29.6.3 Requirements for means of egress from mezzanine floors in aircraft-servicing areas shall be as noted in 29.6.3.1 and 29.6.3.2.

29.6.3.1 The means of egress shall be arranged so that the travel distance to the nearest exit from any point on the mezzanine does not exceed 75 ft (23 m).

29.6.3.2 The means of egress shall lead directly to a properly enclosed stair discharging directly to the exterior, to a suitable cutoff area, or to outside stairs.

29.6.4 Dead ends shall not exceed 50 ft (15 m) and shall not be permitted in areas containing high hazard contents exceeding the maximum allowable quantities per control area as set forth in 34.1.3.

Chapter 30 Storage Occupancies

30.1 General Requirements.

30.1.1 Application.

30.1.1.1* The requirements of this chapter shall apply to new buildings or portions thereof used as a storage occupancy.

30.1.1.2 Repairs, renovations, modifications, additions, and reconstruction of a storage occupancy, and changes of use, including change of occupancy classification to a storage occupancy, or correction of a damaged or unsafe portion of the building containing the storage occupancy, shall comply with one of the following:

(1) Provisions of this chapter
(2) Provisions of Chapter 15

30.1.2 Multiple Occupancies. All multiple occupancies shall be in accordance with Section 6.2 and 30.1.2. Where there are differences in the specific requirements in this chapter and provisions for mixed occupancies or separated occupancies as specified in 6.2.3 and 6.2.4, the requirements of this chapter shall apply. *(See 4.3.2.3.)*

30.1.3 Classification of Occupancy.

30.1.3.1 Storage occupancy classification shall be as follows:

(1) Storage occupancies shall include all buildings and structures, or parts thereof, with occupancy as defined in 6.1.13.
(2) Incidental storage in another occupancy shall not be the basis for overall occupancy classification.

30.1.3.2 Storage occupancies, or areas of storage occupancies that are used for the purpose of packaging, labeling, sorting, special handling, or other operations requiring an occupant load greater than that normally contemplated for storage, shall be classified as industrial occupancies. *(See Chapter 29.)*

30.1.4 Classification of Hazard of Contents.

30.1.4.1 Hazard of contents shall be classified in accordance with 6.3.2.

30.1.4.2 Buildings or areas in which high hazard contents are stored, used, or handled shall comply with Chapter 34.

30.1.5 Minimum Construction Requirements. Construction shall be in accordance with all of the following:

(1) Chapter 7, Construction Types and Height and Area Requirements
(2) Chapter 8, Fire-Resistive Materials and Construction
(3) Chapter 13, Encroachments into the Public Right-of-Way
(4) Chapter 14, Safeguards During Construction
(5) Chapter 31, Occupancies in Special Structures
(6) Chapter 35, Structural Design
(7) Chapter 36, Soils, Foundations, and Retaining Walls
(8) Chapter 37, Exterior Wall Construction
(9) Chapter 38, Roof Assemblies and Roof Structures
(10) Chapter 39, Flood-Resistant Design and Construction
(11) Chapter 40, Quality Assurance During Construction

30.1.6* Occupant Load. The occupant load, in number of persons for whom means of egress and other provisions are required, shall be determined on the basis of the occupant load factors of Table 11.3.1.2 that are characteristic of the use of the space, or shall be determined on the basis of the maximum probable population of the space under consideration, whichever is greater.

30.1.7 Accessibility. Accessibility shall be in accordance with Chapter 12.

30.2 Means of Egress Requirements. Each required means of egress shall be in accordance with the applicable portions of Chapter 11.

30.2.1* Utility Chases. Normally unoccupied utility chases that are secured from unauthorized access and are used exclusively for routing of electrical, mechanical, or plumbing equipment shall not be required to comply with the provisions of Chapter 11.

30.2.2 Means of Egress Components.

30.2.2.1 General. Components of means of egress shall be limited to the types described in 30.2.2.2 through 30.2.2.10.

30.2.2.2 Doors.

30.2.2.2.1 Doors complying with 11.2.1 shall be permitted.

30.2.2.2.2 Delayed-egress locks complying with 11.2.1.6.1 shall be permitted.

30.2.2.2.3 Access-controlled egress doors complying with 11.2.1.6.2 shall be permitted.

30.2.2.3 Stairs.

30.2.2.3.1 Stairs shall comply with 11.2.2 and be permitted to be modified as follows:

--`,,```,,,,````-`-`,,`,,`,`,,`---

Copyright National Fire Protection Association
Provided by IHS under license with NFPA
No reproduction or networking permitted without license from IHS
Not for Resale

(1) Noncombustible, grated stair treads and noncombustible, grated landing floors shall be permitted.
(2) Industrial equipment access in accordance with 29.2.5.3 shall be permitted.

30.2.2.3.2 Spiral stairs complying with 11.2.2.2.3 shall be permitted.

30.2.2.4 Smokeproof Enclosures. Smokeproof enclosures complying with 11.2.3 shall be permitted.

30.2.2.5 Horizontal Exits.

30.2.2.5.1 Horizontal exits complying with 11.2.4 shall be permitted.

30.2.2.5.2* In horizontal exits, where the opening is protected by a fire door assembly on each side of the wall in which it is located, one fire door shall be of the swinging type as provided in 11.2.4.3.7, and the other shall be permitted to be an automatic-sliding fire door that shall be kept open whenever the building is occupied.

30.2.2.6 Ramps. Ramps complying with any of the following shall be permitted:

(1) Ramps in accordance with 11.2.5
(2) Industrial equipment access in accordance with 29.2.5.3

30.2.2.7 Exit Passageways. Exit passageways complying with 11.2.6 shall be permitted.

30.2.2.8 Fire Escape Ladders. Fire escape ladders in accordance with 11.2.9 shall be permitted.

30.2.2.8.1 Fixed industrial stairs in accordance with the minimum requirements for fixed stairs in ANSI A1264.1, *Safety Requirements for Workplace Floor and Wall Openings, Stairs and Railing Systems*, shall be permitted where fire escape ladders are permitted in accordance with 11.2.9.1.

30.2.2.9 Alternating Tread Devices. Alternating tread devices complying with 11.2.11 shall be permitted.

30.2.2.10 Areas of Refuge. Areas of refuge complying with 11.2.12 shall be permitted.

30.2.3 Capacity of Means of Egress. The capacity of means of egress shall be in accordance with Section 11.3.

30.2.4 Number of Means of Egress. The number of means of egress shall comply with 30.2.4.1 and 30.2.4.2 and Section 11.4.

30.2.4.1 Means of egress shall be provided in accordance with one of the following:

(1) In low hazard storage occupancies, a single means of egress shall be permitted from any story or section.
(2) In storage occupancies not classified as low hazard, a single means of egress shall be permitted from any story or section, provided that the exit can be reached within the distance permitted as common path of travel.
(3) In buildings or structures not complying with 30.2.4.1(1) or (2) and used for storage, every section thereof considered separately shall have not less than two separate means of egress as remotely located from each other as practicable.

30.2.4.2 Floors, or portions thereof, with an occupant load of more than 500 persons shall have the minimum number of separate and remote means of egress as specified by 11.4.1.2.

Table 30.2.5 Arrangement of Means of Egress

Arrangement	Low Hazard Storage Occupancy	Storage Occupancy	
		ft	m
Dead-End Corridor			
Protected throughout by an approved, supervised automatic sprinkler system in accordance with NFPA 13 and 55.3.2	No limits	100	30
Not protected throughout by an approved, supervised automatic sprinkler system in accordance with NFPA 13 and 55.3.2	No limits	50	15
Common Path of Travel			
Protected throughout by an approved, supervised automatic sprinkler system in accordance with NFPA 13 and 55.3.2	No limits	100	30
Not protected throughout by an approved, supervised automatic sprinkler system in accordance with NFPA 13 and 55.3.2	No limits	50	15

30.2.5 Arrangement of Means of Egress. Means of egress shall be arranged in accordance with Section 11.5 and shall not exceed that provided by Table 30.2.5.

30.2.6 Travel Distance to Exits. Travel distance, measured in accordance with 11.6, shall not exceed that provided by Table 30.2.6.

30.2.7 Discharge from Exits. Discharge from exits shall be in accordance with Section 11.7.

30.2.8 Illumination of Means of Egress.

30.2.8.1 Means of egress shall be illuminated in accordance with Section 11.8.

Copyright National Fire Protection Association
Provided by IHS under license with NFPA
No reproduction or networking permitted without license from IHS
Not for Resale

Table 30.2.6 Maximum Travel Distance to Exits

Arrangement	Low Hazard Storage Occupancy	Storage Occupancy	
		ft	m
Protected throughout by an approved, supervised automatic sprinkler system in accordance with NFPA 13 and 55.3.2	Unlimited	400	122
Not protected throughout by an approved, supervised automatic sprinkler system in accordance with NFPA 13 and 55.3.2	Unlimited	200	60

30.2.8.2 Means of egress shall be permitted to be illuminated with windows arranged to provide the required level of illumination on all portions of the means of egress during daylight hours, in structures occupied only during such hours, where approved by the authority having jurisdiction.

30.2.9 Emergency Lighting. Emergency lighting shall be provided in normally occupied storage occupancies in accordance with Section 11.9, except for spaces occupied only during daylight hours that are provided with natural illumination in accordance with 30.2.8.2.

30.2.10 Marking of Means of Egress. Means of egress shall have signs in accordance with Section 11.10.

30.2.11 Special Means of Egress Features.

30.2.11.1 Reserved.

30.2.11.2 Lockups. Lockups in storage occupancies shall comply with the requirements of 21.4.5.

30.3 Protection.

30.3.1 Protection of Vertical Openings. Any vertical opening shall be protected in accordance with Section 8.12, and vertical openings in accordance with 8.12.4.2 shall be permitted.

30.3.2 Hazardous Area Protection. (No requirements) *(See also Section 8.15.)*

30.3.3 Interior Finish.

30.3.3.1 General. Interior finish shall be in accordance with Chapter 10.

30.3.3.2 Interior Wall and Ceiling Finish. Interior wall and ceiling finish materials shall be Class A, Class B, or Class C in storage areas and shall be as required by 11.1.4 in exit enclosures.

30.3.3.3 Interior Floor Finish.

30.3.3.3.1 Interior floor finish in exit enclosures and in exit access corridors shall be not less than Class II.

30.3.3.3.2 Interior floor finish in areas other than exit enclosures and exit access corridors shall not be required to comply with Section 10.6.

30.3.4 Detection, Alarm, and Communications Systems.

30.3.4.1 General.

30.3.4.1.1 Storage occupancies shall be provided with a fire alarm system in accordance with Section 55.2, except as modified by the following:

(1) Storage occupancies limited to low hazard contents
(2) Storage occupancies with ordinary hazard contents not exceeding an aggregate floor area of 100,000 ft^2 (9300 m^2)
(3) Storage occupancies protected throughout by an approved automatic sprinkler system in accordance with Section 55.3. Waterflow alarms shall be monitored in accordance with 55.3.2.2.

30.3.4.2 Initiation. Initiation of the required fire alarm system shall be by one of the following:

(1) Manual means in accordance with 55.2.2(1)
(2) Approved automatic fire detection system in accordance with 55.2.2(2) throughout the building and in accordance with 55.2.2.1.5

30.3.4.3 Notification.

30.3.4.3.1 The required fire alarm system shall meet one of the following criteria:

(1) It shall provide occupant notification in accordance with 55.2.3.
(2) It shall sound an audible and visible signal in a constantly attended location for the purposes of initiating emergency action.

30.3.4.3.2 Positive alarm sequence in accordance with 55.2.3.4 shall be permitted.

30.3.5* Extinguishment Requirements.

30.3.5.1 Fire Sprinklers.

30.3.5.1.1 Storage occupancies, other than low hazard storage occupancies, shall be protected by an approved, supervised automatic sprinkler system in accordance with NFPA 13 as follows:

(1) Throughout all storage occupancies three or more stories in height
(2) Throughout all storage occupancies exceeding 12,000 ft^2 (1115 m^2) in fire area
(3) Where the total area of all floors, including mezzanines, exceeds 24,000 ft^2 (2230 m^2)

30.3.5.1.2 Waterflow alarms shall be monitored in accordance with 55.3.2.2.

30.3.5.2 Bulk Storage of Tires. Buildings and structures where the volume for the storage of tires exceeds 20,000 ft^3 (566 m^3) shall be equipped throughout with an approved automatic fire sprinkler system.

30.3.5.3 Mini-Storage Building. An automatic sprinkler system shall be installed throughout all mini-storage buildings greater than 2500 ft^2 (232 m^2).

30.3.5.4 Standpipes. Standpipes shall be provided when required by 55.4.1.

Copyright National Fire Protection Association
Provided by IHS under license with NFPA
No reproduction or networking permitted without license from IHS
Not for Resale

30.3.5.5 Portable Fire Extinguishers. Portable fire extinguishers shall be installed in storage occupancies in accordance with NFPA 1, *Uniform Fire Code*.

30.3.6 Corridors. Corridors shall not be required to comply with the provisions of 11.1.3.1.

30.4 Special Provisions.

30.4.1 Limited Access or Underground Structures. Limited access or underground structures shall comply with Chapter 31.

30.4.2 High-Rise Buildings. The automatic sprinkler requirements of 33.2.2 shall be required for new storage occupancies, except for low hazard storage occupancies.

30.5 Building Services.

30.5.1 Utilities. Utilities shall comply with the provisions of Chapters 49, 52, and 53.

30.5.2 Heating, Ventilating, and Air-Conditioning. Heating, ventilating, and air-conditioning equipment shall comply with the provisions of Chapters 50 and 51.

30.5.3 Elevators, Escalators, and Conveyors. Elevators, escalators, and conveyors shall comply with the provisions of Chapter 54.

30.5.4 Rubbish Chutes, Incinerators, and Laundry Chutes. Rubbish chutes, incinerators, and laundry chutes shall comply with the provisions of Section 8.17.

30.6* Special Provisions for Aircraft Storage Hangars.

30.6.1 The requirements of Sections 30.1 through 30.5 shall be met, except as modified by 30.6.2 through 30.6.4.

30.6.2 The requirements for exits from aircraft storage areas shall comply with 30.6.2.1 through 30.6.2.3.

30.6.2.1 There shall be not less than two means of egress serving each aircraft storage area.

30.6.2.2 Exits from aircraft storage areas shall be provided at intervals not exceeding 150 ft (45 m) on all exterior walls.

30.6.2.3 If provided, horizontal exits through interior fire walls shall be located at intervals not exceeding 100 ft (30 m).

30.6.2.4 If provided, dwarf, or "smash," doors used in doors that accommodate aircraft shall be permitted for compliance with the requirements of 30.6.1 through 30.6.3.

30.6.3 The requirements for means of egress from mezzanine floors in aircraft storage areas shall be as follows:

(1) They shall be arranged so that the travel distance to the nearest exit from any point on the mezzanine does not exceed 75 ft (23 m).
(2) They shall lead directly to a properly enclosed stair discharging directly to the exterior, to a suitable cutoff area, or to outside stairs.

30.6.4 Dead ends shall not exceed 50 ft (15 m), and dead ends shall not be permitted in areas containing high hazard contents exceeding the maximum allowable quantities per control area as set forth in 34.1.3.

30.7* Special Provisions for Grain or Other Bulk Storage Elevators.

30.7.1 General. The requirements of Section 30.1 through Section 30.5 shall be met, except as modified by 30.7.2 through 30.7.4.

30.7.2 Number of Means of Egress. There shall be not less than two means of egress from all working levels of the head house, as modified by 30.7.2.1 and 30.7.2.2.

30.7.2.1 One of the means of egress specified in 30.7.2 shall be a stair to the level of exit discharge, and, if this means of egress is interior to the structure, it shall be enclosed by a dust-resistant, 1-hour fire resistance–rated enclosure in accordance with 11.1.3.2. Exterior stair means of egress shall be protected from the structure by a 1-hour fire resistance–rated wall that extends at least 10 ft (3050 mm) beyond the stair.

30.7.2.2 The second means of egress specified in 30.7.2 shall be one of the following:

(1) Exterior stair or basket ladder–type fire escape, accessible from all working levels of the structure, that provides a passage to ground level
(2) Exterior stair or basket ladder–type fire escape, accessible from all working levels of the structure, that provides access to adjoining structures and that provides a continuous path to the means of egress described in 30.7.3

30.7.2.3 Stair enclosures in existing structures shall be permitted to have non-fire-rated dust-resistant enclosures.

30.7.3 Means of Egress to Ground. An exterior stair or basket ladder–type fire escape shall provide passage to ground level from the top of the end of an adjoining structure, such as a silo, conveyor, gallery, or gantry.

30.7.4 Extinguishment Requirements. (No requirements)

30.7.5 Underground Spaces. Underground spaces shall have not less than two means of egress, one of which shall be permitted to be a means of escape, except as permitted in 30.7.5.1.

30.7.5.1 Where the horizontal travel distance to the means of egress is less than 50 ft (15 m) in normally unoccupied spaces, a single means of egress shall be permitted.

30.7.5.2 Travel distances, measured in accordance with Section 11.6, shall not exceed those provided by Table 30.7.5.2.

Table 30.7.5.2 Maximum Travel Distance to Means of Escape or Exits

Arrangement	Travel Distance	
	ft	m
Protected throughout by an approved, supervised automatic sprinkler system in accordance with NFPA 13 and 55.3.2	400	122
Not protected throughout by an approved, supervised automatic sprinkler system in accordance with NFPA 13 and 55.3.2	200	61

Copyright National Fire Protection Association
Provided by IHS under license with NFPA
No reproduction or networking permitted without license from IHS
Not for Resale

30.8 Special Provisions for Parking Structures.

30.8.1 General Requirements.

30.8.1.1* Application. The provisions of 30.8.1 shall apply to parking structures of the closed or open type, above or below ground, but shall not apply to mechanical or exclusively attendant-type parking facilities that are not occupied by customers. The requirements of Sections 30.1 through 30.7 shall not apply.

30.8.1.2 Mixed Occupancies.

30.8.1.2.1 Where both parking and repair operations are conducted in the same building, the entire building shall comply with Chapter 29, except that, where the parking and repair sections are separated by not less than 1-hour fire-rated construction, the parking and repair sections shall be permitted to be treated separately.

30.8.1.2.2 In areas where repair operations are conducted, the means of egress shall comply with Chapter 29.

30.8.1.3 Special Definition — Open Parking Structure. A parking structure that, at each parking level, has wall openings open to the atmosphere, for an area of not less than 1.4 ft^2 (0.13 m^2) for each linear foot (0.3 m) of its exterior perimeter. Such openings are distributed over 40 percent of the building perimeter or uniformly over two opposing sides. Interior wall lines and column lines are at least 20 percent open, with openings distributed to provide ventilation.

30.8.1.4 Classification of Occupancy. Incidental vehicle parking in another occupancy shall not be the basis for overall occupancy classification.

30.8.1.5 Classification of Hazard of Contents. Parking structures used only for the storage of vehicles shall be classified as ordinary hazard in accordance with Section 6.3.

30.8.1.6 Minimum Construction Requirements.

30.8.1.6.1 Those parts of parking structures located within, immediately below, attached to, or less than 3000 mm (120 in.) from a building used for any other purpose shall be separated by walls, partitions, floors, or floor–ceiling assemblies having fire resistance ratings of not less than 2 hours, unless otherwise permitted by 4.1.3 of NFPA 88A. [**88A:**4.1.2]

Exception: No fire-rated separation shall be required when parts of a parking structure and a building used for any other purpose are separated by 3000 mm (120 in.) or more, and are attached only via open pedestrian balconies or bridges or open vehicle bridges. [88A:4.1.3]

30.8.1.6.2 Those portions of an open parking structure located within or immediately below a building used for another purpose shall have the principal supporting members and bearing walls in all levels of the parking structure protected to provide a fire-resistive rating equivalent to that required for the other occupancy. [**88A:**4.1.4]

30.8.1.6.3 Internal Subdivision. Offices or other similar spaces that are related to the operation of the parking structure and are less than 300 m^2 (3000 ft^2) in area, other than cashier or attendant booths, shall be separated from parking areas by walls or partitions that resist the passage of smoke. [**88A:**4.2]

30.8.1.6.4 Floor surfaces shall be of noncombustible material. Where combustible construction is permitted, floor surfaces shall be noncombustible and liquid tight. [**88A:**4.3.1, 4.3.1.1]

Exception: Asphalt shall be permitted on grade. [88A:4.3.1.2]

30.8.1.6.5 The maximum height, number of stories, and area limitations for enclosed parking structures shall be in accordance with Chapter 7.

30.8.1.6.6 Open parking structures shall be of Type I or Type II construction as defined in NFPA 220, *Standard on Types of Building Construction.* [**88A:**4.7.1]

30.8.1.6.6.1 Heights and floor areas of open parking structures of Type I, Type II (222), or Type II (111) construction shall be permitted to be unlimited. [**88A:**4.7.2]

30.8.1.6.6.2 Open parking structures of Type II (000) construction shall be permitted to be of unlimited area where both of the following conditions are met:

(1) The height does not exceed 25 m (75 ft).
(2) The horizontal distance from any point on any parking level to an exterior wall opening on a street, an alley, a courtyard, or other similar permanent open space does not exceed 60 m (200 ft). [**88A:**4.7.3]

30.8.1.7 Occupant Load. (No requirements.)

30.8.2 Means of Egress Requirements.

30.8.2.1 General. Means of egress shall be in accordance with Chapter 11 and 30.8.2.

30.8.2.2 Means of Egress Components.

30.8.2.2.1 General. Components of means of egress shall be limited to the types described in 30.8.2.2.2 through 30.8.2.2.8.

30.8.2.2.2 Doors.

30.8.2.2.2.1 Doors complying with 11.2.1 shall be permitted.

30.8.2.2.2.2 Special locking arrangements complying with 11.2.1.6 shall be permitted.

30.8.2.2.2.3 An opening for the passage of automobiles shall be permitted to serve as an exit from a street floor, provided that no door or shutter is installed therein.

30.8.2.2.3 Stairs.

30.8.2.2.3.1 Stairs complying with 11.2.2 shall be permitted.

30.8.2.2.3.2 Paragraph 11.2.2.4.6.3(2) shall not apply to guards for parking garages that are accessible to the general public.

30.8.2.2.4 Smokeproof Enclosures. Smokeproof enclosures complying with 11.2.3 shall be permitted.

30.8.2.2.5 Horizontal Exits. Horizontal exits complying with 11.2.4 shall be permitted.

30.8.2.2.6 Ramps.

30.8.2.2.6.1 Ramps shall be permitted in accordance with any of the following conditions:

(1) Ramps complying with 11.2.5 and not subject to normal vehicular traffic where used as an exit shall be permitted.
(2) In a ramp-type open parking structure with open vehicle ramps not subject to closure, the ramp shall be permitted to serve in lieu of the second means of egress from floors above the level of exit discharge, provided that the ramp discharges directly outside at the street level.
(3) For parking structures extending only one floor level below the level of exit discharge, a vehicle ramp leading directly to the outside shall be permitted to serve in lieu of the second means of egress, provided that no door or shutter is installed therein.

Copyright National Fire Protection Association
Provided by IHS under license with NFPA
No reproduction or networking permitted without license from IHS
Not for Resale

30.8.2.2.6.2 Paragraph 11.2.2.4.6.3(2) shall not apply to *(1)* Exits shall lead to the outside of the building on the same level or to stairs; no upward travel shall be permitted unless direct outside exits are available from that floor. *(2)* Any story below the story at which fuel is being dispensed shall have exits leading directly to the outside via outside stairs or doors at ground level.

30.8.2.6 Travel Distance to Exits. Travel distance, measured in accordance with Section 11.6, shall not exceed that provided by Table 30.8.2.6.

Table 30.8.2.6 Maximum Travel Distance to Exits

	Enclosed Parking Structure		Open Parking Structure		Parking Structure Open Not Less than 50 Percent on All Sides	
Arrangement	ft	m	ft	m	ft	m
Protected throughout by an approved, supervised automatic sprinkler system in accordance with NFPA 13 and 55.3.2	200	61	400	122	400	122
Not protected throughout by an approved, supervised automatic sprinkler system in accordance with NFPA 13 and 55.3.2	150	45	300	91	400	122

30.8.2.7 Discharge from Exits. Exit discharge shall comply with Section 11.7.

30.8.2.8 Illumination of Means of Egress. Means of egress shall be illuminated in accordance with Section 11.8 or with natural lighting that provides the required level of illumination in structures occupied only during daylight hours.

30.8.2.9 Emergency Lighting. Parking structures shall be provided with emergency lighting in accordance with Section 11.9, except in structures occupied only during daylight hours and arranged to provide the required level of illumination of all portions of the means of egress by natural means.

30.8.2.10 Marking of Means of Egress. Means of egress shall have signs in accordance with Section 11.10.

30.8.2.11 Special Means of Egress Features. (Reserved)

30.8.3 Protection.

30.8.3.1 Protection of Vertical Openings.

30.8.3.1.1 Vertical Openings in Enclosed Parking Structures. [**88A:**4.6]

30.8.3.1.1.1 Unless otherwise provided in 4.6.3 or 4.6.4 of NFPA 88A, vertical openings through floors in buildings four stories or more in height shall be enclosed with walls or partitions having a fire resistance rating of not less than 2 hours. [**88A**:4.6.1]

30.8.3.1.1.2 Unless otherwise provided in 4.6.3 or 4.6.4 of NFPA 88A, vertical openings through floors in buildings less than four stories in height shall be enclosed with walls or partitions having a fire resistance rating of not less than 1 hour. [**88A**:4.6.2]

30.8.3.1.1.3 Ramps in enclosed parking structures shall not be required to be enclosed where the parking structure is protected throughout by an approved, automatic sprinkler system. [**88A**:4.6.3]

30.8.3.1.1.4 Ramps in enclosed parking structures shall not be required to be enclosed where the parking structure is protected throughout by an approved, supervised, automatic fire detection system, and a mechanical ventilation system in accordance with 5.3.2 of NFPA 88A. [**88A:**4.6.4]

30.8.3.1.1.5* Ramps shall not be required to be enclosed where a parking structure consists of sprinklered enclosed parking levels and sprinklered or nonsprinklered open parking levels.

30.8.3.1.2 Open Parking Structures. Unprotected vertical openings through floors in open parking structures shall be permitted. [**88A:**4.7.4]

30.8.3.2 Hazardous Area Protection.

30.8.3.2.1 General. Protection from hazards shall be in accordance with the following:

(1) Areas where flammable and combustible liquids are stored, handled, or dispensed shall be designed in accordance with NFPA 30A, *Code for Motor Fuel Dispensing Facilities and Repair Garages*.
(2) Areas where liquefied petroleum gas is stored, handled, or dispensed shall be designed in accordance with NFPA 58, *Liquefied Petroleum Gas Code*.
(3) Areas where natural gas fuels are stored, handled, or dispensed shall be designed in accordance with NFPA 52, *Compressed Natural Gas (CNG) Vehicular Fuel Systems Code*, or NFPA 57, *Liquefied Natural Gas (LNG) Vehicular Fuel Systems Code*.

30.8.3.2.2 Floors. In addition to the requirements of 30.8.1.6, floors in areas of parking structures where motor fuels are dispensed shall be designed in accordance with NFPA 30A.

30.8.3.3 Interior Finish.

30.8.3.3.1 General. Interior finish shall be in accordance with Chapter 10.

30.8.3.3.2 Interior Wall and Ceiling Finish. Interior wall and ceiling finish materials shall be Class A, Class B, or Class C in parking structures and shall be as required by 11.1.4 in exit enclosures.

30.8.3.3.3 Interior Floor Finish.

30.8.3.3.3.1 Interior floor finish in exit enclosures and exit access corridors shall be not less than Class II.

30.8.3.3.3.2 Interior floor finish in areas other than exit enclosures and exit access corridors shall not be required to comply with Section 10.6.

30.8.3.4 Detection, Alarm, and Communications Systems.

30.8.3.4.1 General. A fire alarm system shall be required in accordance with Section 55.2 for parking structures, except as modified by the following:

(1) Parking structures not exceeding an aggregate floor area of 100,000 ft^2 (9300 m^2)
(2) Open parking structures

Copyright National Fire Protection Association
Provided by IHS under license with NFPA
No reproduction or networking permitted without license from IHS
Not for Resale

(3) Parking structures protected throughout by an approved automatic sprinkler system in accordance with Section 55.3

30.8.3.4.2 Initiation. Initiation of the required fire alarm system shall be by one of the following:

(1) Manual means in accordance with 55.2.2(1)
(2) Approved automatic fire detection system in accordance with 55.2.2(2) that provides protection throughout the building and in accordance with 55.2.2.1.5
(3) Approved, supervised automatic sprinkler system complying with Section 55.3 and 55.3.2 and in accordance with 55.2.2(3) that provides protection throughout the building and in accordance with 55.2.2.1.5

30.8.3.4.3 Notification.

30.8.3.4.3.1 The required fire alarm system shall sound an audible alarm in a continuously attended location for purposes of initiating emergency action.

30.8.3.4.3.2 Positive alarm sequence in accordance with 55.2.3.4 shall be permitted.

30.8.3.5 Extinguishment Requirements.

30.8.3.5.1 Automatic sprinkler systems, where required, shall conform to NFPA 13. Electronic supervision of supervisory signals shall be provided in accordance with 55.3.2.1. Waterflow alarms shall be monitored in accordance with 55.3.2.2.

30.8.3.5.2 Automatic sprinkler systems shall be installed in basement and underground parking structures, the ceilings of areas less than 24 in. (610 mm) above grade, and in enclosed parking structures of Type III or Type IV construction over 50 ft (15 m) in height. [**88A**:6.1.4]

30.8.3.5.3 Enclosed parking structures located at or above grade, within or immediately below a building used for another occupancy, shall have an approved, automatic sprinkler system throughout the parking structure.

30.8.3.5.4 Standpipes.

30.8.3.5.4.1 Class I standpipe systems shall be provided when required by 55.4.1, as modified by 30.8.3.5.4.2.

30.8.3.5.4.2 In open parking structures of any height, Class I standpipe systems of the manual, dry type shall be permitted.

30.8.3.6 Corridors. Corridors shall not be required to comply with the provisions of 11.1.3.1.

30.8.4 Special Provisions — High-Rise Buildings. (No requirements)

30.8.5 Building Services.

30.8.5.1 Utilities. Utilities shall comply with the provisions of Chapters 52 and 53.

30.8.5.2 Heating, Ventilating, and Air-Conditioning.

30.8.5.2.1 General. Heating, ventilating, and air-conditioning equipment shall comply with the provisions of Chapter 50, except as otherwise required in Section 30.8.

30.8.5.2.2 Heating. All open-flame heating equipment shall be located not less than 18 in. (455 mm) above the floor.

30.8.5.2.3 Ventilation. All enclosed parking structures shall be ventilated by a mechanical system capable of providing a minimum of 1.0 cfm/ft^2(0.3 m^3/min/m^2) of floor area per hour during hours of normal operation. [**88A**:5.3.2]

30.8.5.2.4 Ductwork. Ductwork shall be constructed of noncombustible material. [**88A**:5.3.3]

30.8.5.3 Elevators, Escalators, and Conveyors. Elevators, escalators, and conveyors shall comply with the provisions of Chapter 54.

30.8.5.4 Rubbish Chutes, Incinerators, and Laundry Chutes. Rubbish chutes, incinerators, and laundry chutes shall comply with the provisions of Section 8.17.

Chapter 31 Occupancies in Special Structures

31.1 General.

31.1.1 The requirements of this chapter shall apply to occupancies regulated by Chapters 16 through 30 that are located in a special structure.

31.1.2 Where there are differences in the specific requirements in this chapter and provisions for mixed occupancies or separated occupancies as specified in 6.2.3 and 6.2.4, the requirements of this chapter shall apply. *(See 4.3.2.3.)*

31.2 Underground Structures.

31.2.1 Where underground structures have an occupant load of more than 50 persons in the underground portions of the structure, the underground portions, and all areas and floor levels traversed in traveling to the exit discharge, shall be protected by an approved, supervised automatic sprinkler system installed in accordance with NFPA 13, *Standard for the Installation of Sprinkler Systems*, and 55.3.2.

31.2.2 Underground portions of structures, and all areas traversed in traveling to the exit discharge, shall be provided with emergency lighting in accordance with Section 11.9.

31.2.3 Exits from underground structures having an occupant load of more than 100 persons in the underground portions of the structure and having a floor used for human occupancy more than 30 ft (9.1 m), or more than one level below the lowest level of exit discharge, shall meet the following criteria:

(1) Exits shall be cut off from the level of exit discharge as specified in 11.1.3.2.
(2) Exits shall be provided with outside smoke-venting facilities or other means to prevent the exits from becoming charged with smoke from any fire in the areas served by the exits.
(3) The design of the smoke-venting facilities or other means specified in 31.2.3(2) shall be in accordance with Section 55.7.

31.2.4 The underground portions of an underground structure shall be provided with approved, automatic smoke control in accordance with Section 55.7 where the underground structure has all of the following:

(1) Occupant load of more than 100 persons in the underground portions of the structure
(2) Floor level used for human occupancy of more than 30 ft (9.1 m) or more than 1 level below the lowest level of exit discharge
(3) Combustible contents, combustible interior finish, or combustible construction

31.2.5 Exit stair enclosures in underground structures having a floor level used for human occupancy of more than 30 ft

Copyright National Fire Protection Association
Provided by IHS under license with NFPA
No reproduction or networking permitted without license from IHS
Not for Resale

(9.1 m), or more than one level below the lowest level of exit discharge, shall be provided with signage in accordance with 11.2.2.6 at each floor level landing traversed in traveling to the exit discharge. The signs shall include a chevron-shaped indicator to show direction to the exit discharge.

31.3 Limited Access Structures.

31.3.1 Special Provisions for Limited Access Structures.

31.3.1.1 A structure, or portion of a structure, shall not be considered a limited access structure under the following conditions:

(1) The structure is a one-story structure, or portion thereof, where the story is provided with grade level doors or emergency access openings on two sides of the building, spaced not more than 125 ft (38 m) apart in the exterior walls.
(2) The structure, or portion thereof, is more than one story, in height where the following criteria are met:
   (a) Emergency access openings are provided on the first story, as required by 31.3.1.1(1).
   (b) Every story above the first floor is provided with emergency access openings on two sides of the building, spaced not more than 30 ft (9.1 m) apart.

31.3.1.2 Emergency access openings shall consist of a window, panel, or similar opening that complies with all of the following:

(1) The opening shall have dimensions of not less than 22 in. (560 mm) in width and 24 in (610 mm) in height and shall be unobstructed to allow for ventilation and rescue operations from the exterior.
(2) The bottom of the opening shall be not more than 44 in. (1120 mm) above the floor.
(3) The opening shall be readily identifiable from both the exterior and interior.
(4) The opening shall be readily openable from both the exterior and interior.

31.3.1.3 Limited access structures shall be protected by an approved, supervised automatic sprinkler system in accordance with NFPA 13 and 55.3.2, except for structures meeting the following criteria:

(1) Structure with an occupant load of less than 50 persons
(2) Single-story limited-access structures permitted to have a single exit in accordance with Chapters 16 through 30 and having a common path of travel not exceeding 50 ft (15 m)

31.3.1.4 Limited access portions of structures, and all areas traversed in traveling to the exit discharge, shall be provided with emergency lighting in accordance with Section 11.9.

31.4 Vehicles and Vessels (Mobile Units).

31.4.1 Vehicles. Where immobile, attached to a building, or permanently fixed to a foundation, and where subject to human occupancy, the following vehicles shall comply with the requirements of this *Code* that are appropriate to buildings of similar occupancy:

(1) Trailers
(2) Railroad cars
(3) Streetcars
(4) Buses
(5) Conveyances similar to those specified in 31.4.1(1) through (4)

31.4.2 Vessels. Any ship, barge, or other vessel permanently fixed to a foundation or mooring, or unable to get underway by means of its own power, and occupied for purposes other than navigation shall be subject to the requirements of this *Code* applicable to buildings of similar occupancy.

31.5 Open Structures (Outdoor Processing Facilities).

31.5.1 Definition — Open Structure. A structure that supports equipment and operations not enclosed within building walls.

31.5.2 Means of Egress. The means of egress provisions of Chapter 11 and the applicable occupancy provisions of Chapters 16 through 30 shall apply, except as modified by 31.5.2.1 through 31.5.2.8.

31.5.2.1 Means of Egress Components — Fire Escape Ladders. Open structures that are designed for occupancy by not more than three persons shall be permitted to be served by fire escape ladders complying with 11.2.9.

31.5.2.2 Capacity of Means of Egress. Open structures shall be exempt from the requirements for capacity of means of egress.

31.5.2.3 Number of Means of Egress.

31.5.2.3.1 The grade level of open structures, which by their very nature contain an infinite number of means of egress, shall be exempt from the requirements for number of means of egress.

31.5.2.3.2 Open structures occupied by not more than three persons, and with travel distance of not more than 200 ft (61 m), shall be permitted to have a single exit.

31.5.2.4 Travel Distance to Exits. Open structures shall be exempt from travel distance limitations.

31.5.2.5 Discharge from Exits. Open structures permitted to have a single exit per 31.5.2.3.2 shall be permitted to have 100 percent of the exit discharge through areas on the level of exit discharge.

31.5.2.6 Illumination of Means of Egress. Open structures shall be exempt from illumination of means of egress requirements.

31.5.2.7 Emergency Lighting. Open structures shall be exempt from emergency lighting requirements.

31.5.2.8 Marking of Means of Egress. Open structures shall be exempt from marking of means of egress requirements.

31.5.2.9 Protection.

31.5.2.9.1 Protection of Vertical Openings. Open structures shall be exempt from protection of vertical opening requirements.

31.5.2.9.2 Hazardous Area Protection. Every open structure, other than structures with only occasional occupancy, shall have automatic, manual, or other protection as appropriate for the particular hazard that is designed to minimize danger to occupants in case of fire or other emergency before the occupants have time to utilize the means of egress.

31.5.2.10 Detection, Alarm, and Communications Systems. Open structures shall be exempt from requirements for detection, alarm, and communications systems.

Copyright National Fire Protection Association
Provided by IHS under license with NFPA
No reproduction or networking permitted without license from IHS
Not for Resale

31.6 Towers.

31.6.1 Use of Accessory Levels.

31.6.1.1 Sprinklered Towers. In towers protected throughout by an automatic sprinkler system in accordance with NFPA 13, the levels located below the observation level shall be permitted to be occupied only for the following uses that support tower operations:

(1) Electrical and mechanical equipment rooms, including emergency power
(2) Radar, communications, and electronics rooms
(3)*Incidental accessory uses

31.6.1.2 Electronic supervision of supervisory signals shall be provided in accordance with 55.3.2.1. Waterflow alarms shall be monitored in accordance with 55.3.2.2.

31.6.1.3 Nonsprinklered Towers. The levels located within a tower below the observation level and equipment room for that level in nonsprinklered towers shall not be occupied.

31.6.2 Means of Egress. The means of egress provisions of Chapter 11 and the applicable occupancy provisions of Chapters 16 through 30 shall apply, except as modified by 31.6.3 through 31.6.10.

31.6.3 Means of Egress Components.

31.6.3.1 Fire Escape Ladders. Towers, such as forest fire observation or railroad signal towers, that are designed for occupancy by not more than three persons shall be permitted to be served by fire escape ladders complying with 11.2.9.

31.6.3.2 Elevators. Towers subject to occupancy by not more than 90 persons shall be permitted to use elevators in the means of egress in accordance with 11.2.13.

31.6.4 Capacity of Means of Egress.

31.6.4.1 Means of egress for towers shall be provided for the number of persons expected to occupy the space.

31.6.4.2 Spaces not subject to human occupancy because of machinery or equipment shall be excluded from consideration.

31.6.5 Number of Means of Egress.

31.6.5.1 Towers shall be permitted to have a single exit if the following conditions are met:

(1) The tower is subject to occupancy by fewer than 25 persons.
(2) The tower is not used for living or sleeping purposes.
(3) The tower is of Type I, Type II, or Type IV construction.
(4) The tower interior wall and ceiling finish is Class A or Class B.
(5) The tower has no combustible materials in, under, or in the immediate vicinity, except necessary furniture.
(6) There are no high hazard occupancies in the tower or in the immediate vicinity.
(7) Where the tower is located above a building, the single exit from the tower is provided by one of the following:
    (a) Exit enclosure separated from the building with no door openings to or from the building
    (b) Exit enclosure leading directly to an exit enclosure serving the building with walls and door separating these exit enclosures from each other, and another door allowing access to the top floor of the building that provides access to a second exit serving that floor

31.6.5.2 Towers with 360-degree line-of-sight requirements shall be permitted to have a single means of egress for a distance of travel not exceeding 75 ft (23 m), or 100 ft (30 m) if the tower is protected throughout by an approved automatic sprinkler system in accordance with NFPA 13. Electronic supervision of sprinkler system supervisory signals shall be provided in accordance with 55.3.2.1, and waterflow alarms shall be monitored in accordance with 55.3.2.2.

31.6.6 Travel Distance to Exits. Towers in which ladders are permitted by 31.6.3.1 shall be exempt from travel distance limitations.

31.6.7 Discharge from Exits. Towers permitted to have a single exit per 31.6.5.1 shall be permitted to have 100 percent of the exit discharge through areas on the level of exit discharge.

31.6.8 Illumination of Means of Egress. Towers in which ladders are permitted per 31.6.3.1 shall be exempt from illumination of means of egress requirements.

31.6.9 Emergency Lighting.

31.6.9.1 Towers in which ladders are permitted per 31.6.3.1 shall be exempt from emergency lighting requirements.

31.6.9.2 Locations not routinely inhabited by humans shall be exempt from emergency lighting requirements.

31.6.9.3 Structures occupied only during daylight hours, with windows arranged to provide the required level of illumination of all portions of the means of egress during such hours, shall be exempt from emergency lighting requirements where approved by the authority having jurisdiction.

31.6.10 Marking of Means of Egress.

31.6.10.1 Towers in which ladders are permitted per 31.6.3.1 shall be exempt from marking of means of egress requirements.

31.6.10.2 Locations not routinely inhabited by humans shall be exempt from marking of means of egress requirements.

31.6.11 Protection.

31.6.11.1 Protection of Vertical Openings.

31.6.11.1.1 Towers in which ladders are permitted per 31.6.3.1 shall be exempt from protection of vertical opening requirements.

31.6.11.1.2 In towers where the support structure is open and no occupancy is located below the top floor level, stairs shall be permitted to be open with no enclosure required, or fire escape stairs shall be permitted.

31.6.11.2 Hazardous Area Protection. Every tower, other than towers with only occasional occupancy, shall have automatic, manual, or other protection as appropriate for the particular hazard that is designed to minimize danger to occupants in case of fire or other emergency before the occupants have time to utilize the means of egress.

31.6.12 Detection, Alarm, and Communications Systems. Towers designed for occupancy by not more than three persons shall be exempt from requirements for detection, alarm, and communications systems.

31.7 Water-Surrounded Structures.

31.7.1 General. The provisions of Sections 31.1 and 31.7 shall apply to those structures that are not under the jurisdiction of the U.S. Coast Guard and are designed and arranged in accordance with U.S. Coast Guard regulations.

Copyright National Fire Protection Association
Provided by IHS under license with NFPA
No reproduction or networking permitted without license from IHS
Not for Resale

31.7.2 Means of Egress.

31.7.2.1 General. The means of egress provisions of Chapter 11 shall apply, except as modified by 31.7.2.2 through 31.7.2.5.

31.7.2.2 Capacity of Means of Egress. Spaces not subject to human occupancy because of machinery or equipment shall be exempt from capacity of means of egress requirements.

31.7.2.3 Discharge from Exits. Structures permitted to have a single exit in accordance with Chapters 16 through 30 shall be permitted to have 100 percent of the exit discharge through areas on the level of exit discharge.

31.7.2.4 Emergency Lighting.

31.7.2.4.1 Locations not routinely inhabited by humans are exempt from emergency lighting requirements.

31.7.2.4.2 Structures occupied only during daylight hours, with windows arranged to provide the required level of illumination of all portions of the means of egress during such hours, shall be exempt from emergency lighting requirements where approved by the authority having jurisdiction.

31.7.2.5 Marking of Means of Egress. Locations not routinely inhabited by humans shall be exempt from marking of means of egress requirements.

31.7.3 Hazardous Area Protection. Every water-surrounded structure, other than structures with only occasional occupancy, shall have automatic, manual, or other protection as appropriate for the particular hazard that is designed to minimize danger to occupants in case of fire or other emergency before the occupants have time to use the means of egress.

31.8 Piers.

31.8.1 Number of Means of Egress. Piers used exclusively to moor cargo vessels and to store material shall be exempt from number of means of egress requirements where provided with proper means of egress from structures thereon to the pier and a single means of access to the mainland, as appropriate with the pier's arrangement.

31.8.2 Arrangement of Means of Egress.

31.8.2.1 Piers not meeting the requirements of 31.8.1 and occupied for other than cargo handling and storage shall have means of egress arranged in accordance with Chapter 11.

31.8.2.2 In addition to the requirement of 31.8.2.1, one of the following measures shall be provided on piers extending over 150 ft (45 m) from shore to minimize the possibility that fire under or on the pier will block escape of occupants to shore:

(1) The pier shall be arranged to provide two separate ways to travel to shore, such as two well-separated walkways or independent structures.
(2) The pier deck shall be open, fire resistive, and set on noncombustible supports.
(3) The pier shall be open and unobstructed and shall be 50 ft (15 m) or more in width if less than 500 ft (150 m) long, or its width shall be not less than 10 percent of its length if over 500 ft (150 m) long.
(4) The pier deck shall be provided with an approved automatic sprinkler system in accordance with Section 55.3 that protects the combustible substructure and all superstructures, and the sprinkler system shall be supervised if the applicable occupancy chapter requires supervision of sprinkler systems.

31.9 Helistops.

31.9.1 Requirements for helistops shall be as follows:

(1) Helistops shall be permitted to be erected on buildings or at other locations when constructed in accordance with the requirements of Section 31.9 and NFPA 418, *Standard for Heliports.*
(2) When erected on buildings, helistops shall be designed in accordance with Chapter 35 for design live and dead loads and as specified in Chapter 7 for materials of construction.

31.9.2 Requirements for touchdown or landing areas for helicopters shall be as follows:

(1) The touchdown or landing area for helicopters weighing less than 3500 lb (1587.6 kg) shall be a minimum of 20 ft × 20 ft (6.1 m × 6.1 m) in area.
(2) The landing area shall be surrounded on all sides by a clear area having a minimum average width at roof level of 15 ft (4.6 m), but with no width less than 5 ft (1.5 m).
(3) For helicopters weighing more than 3500 lb (1587.6 kg), special requirements shall be met as determined by the authority having jurisdiction.

31.9.3 Helicopter landing areas, and the supports thereof on the roof of a building, shall be of noncombustible construction.

31.9.4 Landing areas shall be designed to confine any spillage of flammable liquid to the landing area.

31.9.5 Provision shall be made to drain the spillage specified in 31.9.4 away from exits and stairways.

31.9.6 Exits from helistops shall conform to the requirements of Chapter 11.

31.9.7 Guardrails shall be provided around all roofs or decks and shall comply with the requirements of 11.2.2.4.

31.9.8 Before operating helicopters from rooftops is permitted, written approval of the Federal Aviation Agency shall be presented to the authority having jurisdiction.

Chapter 32 Special Construction

32.1 General.

32.1.1 Scope. All special construction, as defined in this chapter, shall be in compliance with this chapter and shall meet all other applicable requirements of this *Code.*

32.1.2 Flood Resistance. Permanent special structures that are located wholly or partly within the flood hazard area established by 39.4.2 shall comply with the provisions of Chapter 39.

32.1.3 Special Definitions. A list of special terms used in this chapter follows.

32.1.3.1 Bleachers. A grandstand in which the seats are not provided with backrests. [***101,*** 2006]

32.1.3.2 Folding and Telescopic Seating. A structure that is used for tiered seating of persons and whose overall shape and size can be reduced, without being dismantled, for purposes of moving or storing. [**102,** 1995]

32.1.3.3* Grandstand. A structure that provides tiered or stepped seating. [***101,*** 2006]

Copyright National Fire Protection Association
Provided by IHS under license with NFPA
No reproduction or networking permitted without license from IHS
Not for Resale

32.1.3.4* Hot Tub. A spa constructed of wood, with sides and bottoms formed separately, and the whole shaped to join together by pressure from the surrounding hoops, bands, or rods.

32.1.3.5 Membrane. For the purposes of membrane structures, a thin, flexible, water-impervious material capable of being supported by an air pressure of 1½ in. water column (38 mm).

32.1.3.6 Permanent. Any object that is intended to remain in place for more than 180 days in any consecutive 12-month period.

32.1.3.7 Pool.

32.1.3.7.1 Public Pool. Any pool that is not a residential pool.

32.1.3.7.2 Residential Pool. A swimming pool that is intended for noncommercial use by not more than three owner families and their guests.

32.1.3.7.3 Swimming Pool. Any constructed pool intended for swimming or diving, permanent or nonportable, that is over 24 in. (610 mm) in depth, has a surface area exceeding 250 ft^2 (23 m^2) or a volume over 3250 gal (12,300 L).

32.1.3.8 Spa. A hydrotherapy unit, including, but not limited to, a therapeutic or hydrotherapy pool, whirlpool, or hot tub, with a maximum water depth of 48 in. (1220 mm) that might have a therapeutic use but is not drained, cleaned, or refilled for each individual use.

32.1.3.8.1 Portable Spa. A spa that is not permanent and in which the water circulating equipment can be either an integral or nonintegral part of the product.

32.1.3.8.2 Public Spa. Any spa that is intended to be used for bathing and is operated by an owner, a licensee, or a concessionaire, regardless of whether a fee is charged for use.

32.1.3.8.3* Residential Spa. A permanent spa in which the water heating and water circulation equipment is not an integral part of the product.

32.1.3.9 Structure.

32.1.3.9.1 Air-Inflated Structure. A structure whose shape is maintained by air pressure in cells or tubes forming all or part of the enclosure of the usable area and in which the occupants are not within the pressurized area used to support the structure.

32.1.3.9.2* Air-Supported Structure. A structure where shape is maintained by air pressure and in which occupants are within the elevated pressure area.

32.1.3.9.3 Membrane Structure. A building or portion of a building incorporating an air-inflated, air-supported, tensioned-membrane structure; a membrane roof; or a membrane-covered rigid frame to protect habitable or usable space.

32.1.3.9.4 Tensioned-Membrane Structure. A membrane structure incorporating a membrane and a structural support system such as arches, columns and cables, or beams wherein the stresses developed in the tensioned membrane interact with those in the structural support so that the entire assembly acts together to resist the applied loads.

32.1.3.10 Temporary. Any object that is in place for a period of 180 consecutive days or less.

32.1.3.11* Tent. A temporary structure, the covering of which is made of pliable material that achieves its support by mechanical means such as beams, columns, poles, or arches, or by rope or cables, or both.

32.1.3.11.1 Private Party Tent. A tent erected in the yard of a private residence for entertainment, recreation, dining, a reception, or similar function.

32.1.3.12 Weathered-Membrane Material. Membrane material that has been subjected to a minimum of 3000 hours in a weatherometer in accordance with ASTM G 155, *Standard Practice for Operating Xenon Arc Light Apparatus for Exposure of Non-Metallic Materials*, or approved equivalent.

32.2 Membrane Structures.

32.2.1 General.

32.2.1.1 Scope. Section 32.2 shall apply to permanent air-supported, air-inflated, and tensioned-membrane structures, collectively known as membrane structures, that are used as complete buildings and as roofs or other portions of buildings or other types of construction, and the following also shall apply:

(1) Membrane structures also shall comply with the applicable provisions of this *Code*.
(2) Temporary membrane structures shall comply with 32.2.5.

32.2.1.1.1 General. Membrane structures that provide the complete enclosure for the occupied space shall be considered as complete buildings and subject to the requirements of Section 32.2.

32.2.1.1.2 Height. Membrane structures shall be limited to one story in height, but height shall not be limited in number of feet.

32.2.1.1.3 Area. For determining allowable area, the construction type for a membrane structure shall be based on the support system.

32.2.1.1.3.1 Air-supported membrane structures shall not exceed the allowable areas listed in Chapter 7 for Type II(000) unprotected construction.

32.2.1.1.3.2 Area increases in accordance with Chapter 7 shall be permitted.

32.2.1.2 Exits. Exits shall be provided in accordance with Chapter 11.

32.2.1.3 Electrical. Electrical wiring shall comply with NFPA 70, *National Electrical Code*.

32.2.1.4 Fire Protection Systems and Equipment. All membrane structures shall be in accordance with Chapter 55.

32.2.1.5 Mechanical.

32.2.1.5.1 Fuel gas heating, ventilation, and air-conditioning installations shall conform to the requirements of NFPA 54, *National Fuel Gas Code*.

32.2.1.5.2 The installation of equipment not covered in 32.2.1.5.1 shall conform to the requirements of the UMC, *Uniform Mechanical Code*.

32.2.1.6 Occupancy Separation. A membrane structure building that is occupied by more than one use group shall comply with Chapter 6 of this *Code*.

Copyright National Fire Protection Association
Provided by IHS under license with NFPA
No reproduction or networking permitted without license from IHS
Not for Resale

32.2.1.7 Mixed Construction.

32.2.1.7.1 Membrane structures shall be permitted to be utilized as a portion of buildings of other types of construction as specified in Section 32.2.

32.2.1.7.2 Height and area limits shall be as specified for the type of construction and occupancy of the building.

32.2.2 Permanent Membrane Structures.

32.2.2.1 Required Tests. All tests of membrane materials for compliance with this chapter shall be performed on weathered-membrane materials.

32.2.2.2 Use of Membrane Materials. Membrane materials shall not be used where fire resistance ratings are required for walls or roofs, unless otherwise permitted by the following:

(1) Where every part of the roof, including the roof membrane, is not less than 20 ft (6100 mm) above any floor, balcony, or gallery, a noncombustible or limited-combustible membrane shall be permitted to be used as the roof in any type of construction.
(2) With approval of the authority having jurisdiction, membrane materials shall be permitted to be used where every part of the roof membrane is located sufficiently above every significant fire potential, so that the imposed temperature will not exceed the capability of the membrane, including seams, to maintain its structural integrity.

32.2.2.3 Flame Spread.

32.2.2.3.1 Flame spread of all membrane materials exposed within the structure shall be Class A, as defined in Chapter 10.

32.2.2.3.2 The requirement of 32.2.2.3.1 shall not apply to plastic less than 20 mil (0.51 mm) in thickness located less than 30 ft (9100 mm) above any floor in greenhouses where occupancy by the general public is prohibited.

32.2.2.4 Flame Resistance.

32.2.2.4.1 All membrane structure fabric shall meet the requirements of Test Method 2 contained in NFPA 701, *Standard Methods of Fire Tests for Flame Propagation of Textiles and Films.*

32.2.2.4.2 The requirement of 32.2.2.4.1 shall not apply to plastic less than 20 mil (0.51 mm) in thickness located less than 30 ft (9100 mm) above any floor in greenhouses where occupancy by the general public is prohibited.

32.2.2.4.3 The authority having jurisdiction shall require one of the following as evidence that membrane structure fabric materials have the required flame resistance:

(1) Certificate or other evidence of acceptance by an organization acceptable to the authority having jurisdiction
(2) Report of tests made by other inspection authorities or organizations acceptable to the authority having jurisdiction

32.2.2.4.4 Where required by the authority having jurisdiction, confirmatory field tests shall be conducted using test specimens from the original material affixed at the time of manufacture to the exterior of the structure.

32.2.3 Tensioned-Membrane Structures.

32.2.3.1 Protection for Membrane Roofs. Protection for membrane roofs for structures in climates subject to freezing temperatures and ice buildup shall be as specified in 32.2.3.1.1 or 32.2.3.1.2.

32.2.3.1.1 The roof shall be composed of two layers with an air space between the layers through which heated air can be moved to guard against ice accumulation.

32.2.3.1.2 Any approved methods that protect against ice accumulation shall be permitted.

32.2.3.2* Protection for Roof Drains. Protection for roof drains shall be as specified in 32.2.3.2.1 and 32.2.3.2.2 or 32.2.3.2.3.

32.2.3.2.1 Roof drains shall be equipped with listed de-icing and snow-melting equipment to protect against ice buildup, which would prevent the drains from functioning.

32.2.3.2.2 The equipment specified in 32.2.3.2.1 shall be served by on-site standby electrical power in addition to the normal public service.

32.2.3.2.3 In lieu of de-icing and snow-melting equipment, any other approved methods that protect against ice accumulation shall be permitted.

32.2.4 Air-Supported, Air-Inflated Structures.

32.2.4.1* General. In addition to the requirements of this *Code*, air-supported structures shall be designed and operated in accordance with ASCE/SEI 17, *Air Supported Structures.*

32.2.4.2 Maintenance and Operation.

32.2.4.2.1 Instructions in both operation and maintenance shall be transmitted to the owner by the manufacturer of the tensioned-membrane, air-supported, or air-inflated structure.

32.2.4.2.2 An annual inspection and required maintenance of each structure shall be performed.

32.2.4.2.3 At least biannually, the annual inspection shall be performed by a professional engineer or qualified service representative.

32.2.5 Temporary Membrane Structures.

32.2.5.1 General. Membrane structures designed to meet all the requirements of this chapter shall be permitted to be used as temporary buildings, subject to the approval of the authority having jurisdiction.

32.2.5.2 Temporary Membrane Structures. Temporary membrane structures shall comply with the requirements of 32.2.5, 32.2.2.4, and 32.3.5.

32.2.5.3* Temporary Tensioned-Membrane Structures. Temporary tensioned-membrane structures shall be permitted to comply with Section 32.3, provided that the following criteria are met:

(1) Roof drains shall be equipped with listed de-icing and snow-melting equipment.
(2) The de-icing and snow-melting equipment shall be served by on-site standby electrical power in addition to the normal public service.
(3) Any approved methods that protect against ice accumulation shall be permitted.

32.2.5.4 Clearance. There shall be a minimum clearance of 36 in. (915 mm) between the membrane and the contents or equipment within the building and between the membrane and any exterior object.

32.3 Tents.

32.3.1 General. Tents, other than private party tents and camping tents, under 400 ft^2 (37.2 m^2) shall comply with the requirements of Section 32.3 and 16.4.8 or 16.4.9, as applicable.

Copyright National Fire Protection Association
Provided by IHS under license with NFPA
No reproduction or networking permitted without license from IHS
Not for Resale

32.3.2 Structural Design Load Requirements. Tents and membrane structures shall comply with the requirements of Chapter 35 for structural design loads.

32.3.3 Flame Propagation Performance.

32.3.3.1 All tent fabric shall meet the flame propagation performance criteria of Test Method 2, as required in NFPA 701.

32.3.3.2 The authority having jurisdiction shall require one of the following as evidence that the fabric materials have the required flame propagation performance:

(1) Certificate or other evidence of acceptance by an organization acceptable to the authority having jurisdiction
(2) Report of tests made by other inspection authorities or organizations acceptable to the authority having jurisdiction

32.3.3.3 Where required by the authority having jurisdiction, confirmatory field tests shall be conducted using test specimens from the original material affixed at the time of manufacture to the exterior of the tent.

32.3.4 Location and Spacing.

32.3.4.1 There shall be a minimum of 10 ft (3050 mm) between stake lines.

32.3.4.2 Adjacent tents shall meet the requirements of 32.3.4.2.1 and 32.3.4.2.2.

32.3.4.2.1 Adjacent tents shall be no closer to each other than allowed in order to provide an area to be used as a means of emergency egress as calculated in accordance with Chapter 11.

32.3.4.2.2 Where 10 ft (3050 mm) between stake lines is not sufficient for means of egress, the distance necessary for means of egress shall govern.

32.3.4.3 Subject to the approval of the authority having jurisdiction, the requirements of 32.3.4.2 shall not apply, provided that the following criteria are met:

(1) Tents not occupied by the public and not used for the storage of combustible material shall be permitted to be erected less than 10 ft (3050 mm) from other structures.
(2) Tents, each not exceeding 1200 ft^2 (110 m^2), and located in fairgrounds or similar open spaces, shall not be required to be separated from each other.

32.3.4.4 The placement of tents relative to other structures shall be at the discretion of the authority having jurisdiction, based on occupancy, use, opening, exposure, and other similar factors.

32.3.5 Protection.

32.3.5.1 Tents and temporary membrane structures shall be protected as specified in 32.3.5.1.1 through 32.3.5.1.4.

32.3.5.1.1 The ground enclosed by the structure, and the surrounding ground not less than 10 ft (3050 mm) outside of the structure, shall be cleared of all flammable or combustible material and vegetation.

32.3.5.1.2 The requirement of 32.3.5.1.1 shall be accomplished to the satisfaction of the authority having jurisdiction prior to the erection of tents and temporary membrane structures.

32.3.5.1.3 The premises shall be kept free from flammable or combustible materials during the period for which the premises are used by the public.

32.3.5.1.4 The requirements of 32.3.5.1.1 through 32.3.5.1.3 shall not apply to necessary support equipment.

32.3.5.2 Enclosed stadiums, arenas, and similar structures shall be protected throughout by an approved, electrically supervised automatic sprinkler system in accordance with 55.3.2 and NFPA 13, *Standard for the Installation of Sprinkler Systems*, unless otherwise permitted by the following:

(1) Where the ceiling or roof, whichever is lower, of the playing/activity area is more than 55 ft (16.7 m) above the floor, sprinklers shall not be required above the playing/activity area where permitted by the authority having jurisdiction.
(2) Sprinklers shall not be required above seating areas that view the playing/activity area.

32.3.5.3 An enclosed area shall be protected by an approved sprinkler system in accordance with NFPA 13, unless such an area is one of the following:

(1) Enclosed stadiums, arenas, and similar structures
(2) Press boxes of less than 1000 ft^2 (93 m^2)
(3) Storage facilities of less than 1000 ft^2 (93 m^2), if enclosed with minimum 1-hour fire resistance–rated construction
(4) Enclosed areas underneath grandstands or bleachers that comply with 16.4.8.5

32.3.6 Services.

32.3.6.1 Electrical installations shall conform to the requirements of NFPA 70.

32.3.6.2 The requirement of 32.3.6.1 shall not apply where otherwise provided by law, ordinance, or regulation.

32.3.6.3 Fuel-fired heaters and their installation shall be approved by the authority having jurisdiction.

32.3.6.4 Ducts used to convey heated air shall comply with NFPA 90A, *Standard for the Installation of Air-Conditioning and Ventilating Systems*.

32.3.6.5 Containers for liquefied petroleum gases shall be installed not less than 60 in. (1525 mm) from any tent or temporary membrane structure.

32.3.6.6 Heating devices shall comply with the requirements of the following standards:

(1) NFPA 31, *Standard for the Installation of Oil-Burning Equipment*
(2) NFPA 54, *National Fuel Gas Code*
(3) NFPA 211, *Standard for Chimneys, Fireplaces, Vents, and Solid Fuel-Burning Appliances*

32.3.6.7 Electric heaters shall meet the following criteria:

(1) Heaters used inside a tent or temporary membrane structure shall be approved.
(2) Heaters shall be connected to the power source by an outdoor-rated electric cable sized to handle the electrical load.

32.3.7 In addition to the other requirements of Section 32.3, tents used for the retail sales of consumer fireworks, 1.4G shall comply with NFPA 1124, *Code for the Manufacture, Transportation, Storage, and Retail Sales of Fireworks and Pyrotechnic Articles*.

32.4 Awnings and Canopies.

32.4.1 General. Awnings and canopies shall comply with the requirements of Section 32.4 and other applicable sections of this *Code*.

Copyright National Fire Protection Association
Provided by IHS under license with NFPA
No reproduction or networking permitted without license from IHS
Not for Resale

32.4.2 Construction Types. Construction shall comply with the requirements of 32.4.2.1 and 32.4.2.2.

32.4.2.1 In Type I and Type II construction, awnings and canopies shall be constructed of rigid frames consisting of one of the following:

(1) Noncombustible material
(2) Wood of Type IV construction sizes
(3) Fire-retardant-treated wood
(4) One-hour fire resistance–rated construction with noncombustible covers

32.4.2.2 For Type III, Type IV, and Type V construction, the frame and covering shall be of approved materials.

32.4.3 Coverings. Awnings and canopies shall be permitted to have a combustible covering that meets the flame propagation performance criteria with NFPA 701, or that has a Class A rating as specified in Chapter 10.

32.4.4 Plastics. Plastics meeting the requirements of light-transmitting plastics in Section 48.7 shall be permitted in awnings and canopies when constructed in accordance with the requirements for marquees in Section 32.5.

32.4.5 Motor Fuel–Dispensing Facility Canopies. Motor fuel–dispensing facility canopies shall comply with the requirements of 32.4.5.1 through 32.4.5.3.

32.4.5.1 Canopies erected over areas where fuels are dispensed shall have a clear, unobstructed height of not less than 13 ft 6 in. (4115 mm) where located above the vehicle drive-through area.

32.4.5.2 Canopies and their supports erected over fuel dispensers shall be constructed of noncombustible materials, fire-retardant-treated wood, wood meeting Type IV construction sizes, or construction providing a minimum 1-hour fire resistance rating. Combustible materials shall be permitted in accordance with 32.4.5.3.

32.4.5.3 Combustible materials used in or on a canopy shall comply with any one of the following:

(1) Combustible materials shall be completely shielded from the fuel dispensers by a noncombustible component of the canopy or by wood meeting Type IV construction sizes.
(2) Plastics shall meet the following criteria:
    (a) They shall be covered by an aluminum skin having a minimum thickness of 0.019 in. (0.5 mm) or a corrosion-resistant steel skin having a minimum base metal thickness of 0.016 in. (0.41 mm).
    (b) They shall have a Class A rating, as specified in Chapter 10, when tested in the form intended for use and a self-ignition temperature of not less than 650°F (343°C) when tested in accordance with ASTM D 1929, *Standard Test Method for Determining Ignition Temperature of Plastics*.
(3) Light-transmitting plastic panels shall meet the following criteria:
    (a) The panels shall be located not less than 10 ft (3050 mm) from any building on the same property, and not less than 40 ft (12.2 m) from the street or open yard to the property line.
    (b) The aggregate area of such panels shall be not greater than 1000 ft^2 (93 m^2).
    (c) The area of any individual plastic panel shall be not greater than 100 ft^2 (9.3 m^2).

32.5 Marquees.

32.5.1 Marquees shall comply with the requirements of Section 32.5 and other applicable sections of this *Code*.

32.5.2 For the purpose of Section 32.5, a marquee shall include any object or decoration attached to a marquee or attached to a part of a marquee.

32.5.3 The horizontal clearance between a marquee and the curb line shall be not less than 24 in. (610 mm).

32.5.4 The maximum height of a marquee, measured vertically from its lowest to its highest point, shall not exceed 9 ft (2745 mm).

32.5.5 A marquee shall be supported entirely by the building; shall be constructed as specified in Chapter 7; and shall be of Type I, Type II, or Type V(111) construction.

32.5.6 The roof, or any part thereof, shall be permitted to be a skylight in accordance with Section 38.11, Section 46.8, and Section 48.7.

32.5.7 Every roof and skylight of a marquee shall be sloped to downspouts that conduct any drainage from the marquee in an approved manner.

32.6 Outdoor Signs.

32.6.1 The design and materials of construction of outdoor advertising signs and display structures shall be in accordance with the requirements of Chapters 7, 35, and 38 and Sections 32.6 and 32.13.

32.6.2 Electrical signs shall be installed in accordance with the requirements of NFPA 70 and Section 32.6.

32.7 Grandstands and Bleachers.

32.7.1 General. Grandstands and bleachers shall comply with the requirements of Section 32.7 and 16.4.8 or 16.4.916.4.9 as applicable.

32.7.2 Location. Grandstands shall be erected or otherwise located only where load-carrying capacities exist to support the loads.

32.7.3 Minimum Construction Requirements.

32.7.3.1 Grandstands and bleachers shall be permitted to be of unlimited area when of Type I or Type II construction.

32.7.3.2 Grandstands and bleachers shall be permitted to be of Type III, Type IV, or Type V construction when designed in accordance with 32.7.5.

32.7.4 Design.

32.7.4.1 Grandstands shall be designed to withstand the structural loading requirements of Chapter 35, unless otherwise permitted by 32.7.4.

32.7.4.2 The manufacturer shall comply with the requirements of 32.7.4.2.1 and 32.7.4.2.2.

32.7.4.2.1 Where required by the authority having jurisdiction, the manufacturer shall submit either of the following:

(1) Calculations verifying the design analysis prepared by a professional engineer or registered architect
(2) Report of load tests conducted by an approved, independent testing laboratory and certified by a professional engineer

Copyright National Fire Protection Association
Provided by IHS under license with NFPA
No reproduction or networking permitted without license from IHS
Not for Resale

32.7.4.2.2 Where required by the authority having jurisdiction, the manufacturer shall certify that the equipment supplied is in accordance with the design.

32.7.5 Special Requirements — Type III, Type IV, and Type V Grandstands.

32.7.5.1 An outdoor grandstand of Type III, Type IV, or Type V construction shall not be erected a distance less than two-thirds of its height from a building, but in no case shall the grandstand be erected less than 10 ft (3050 mm) from a building, unless one of the following criteria is met:

(1) The exterior wall of the building is of at least 1-hour fire resistance–rated construction with all openings protected.
(2) A fire wall of at least 1-hour fire resistance–rated construction is provided between the grandstand and the building.

32.7.5.2 The following shall apply to outdoor grandstand units of Type III, Type IV, or Type V construction:

(1) No outdoor grandstand unit shall exceed 10,000 ft^2 (930 m^2) or 200 ft (61 m) in length.
(2) Grandstand units of the maximum size shall be placed not less than 20 ft (6100 mm) apart or shall be separated by walls with a 1-hour fire–resistance rating.
(3) Not more than three units shall be erected in any one group.
(4) Each group of less than three units shall be separated from any other group by a wall of 2-hour fire resistance–rated construction extending 24 in. (610 mm) above the seat platforms or by an open space of not less than 50 ft (15 m).
(5) Where entirely constructed of labeled fire-retardant-treated wood that has passed the standard rain test in ASTM D 2898, *Standard Test Methods for Accelerated Weathering of Fire-Retardant-Treated Wood for Fire Testing*, or where constructed of members conforming to dimensions for heavy timber construction [Type IV (2HH)], the area or length specified by 32.7.5.2(1) shall be permitted to be doubled.

32.7.5.3 The highest level of seat platforms above the ground or the surface at the front of the grandstand shall be as follows:

(1) Grandstands of Type III, Type IV, or Type V construction — not more than 20 ft (6100 mm)
(2) Portable grandstands of Type III, Type IV, or Type V construction within tents or membrane structures — not more than 12 ft (3660 mm)

32.7.5.4 Where entirely constructed of labeled fire-retardant-treated wood that has passed the standard rain test in ASTM D 2898, or where constructed of members conforming to dimensions for heavy timber construction [Type IV (2HH)], the heights specified by 32.7.5.3 shall be permitted to be doubled.

32.7.6 Special Requirements — Portable Grandstands. Portable grandstands shall conform to the requirements of this chapter for grandstands and the special requirements of this subsection.

32.7.6.1 General. Portable grandstands shall comply with the following:

(1) Portable grandstands shall be self-contained, having within them all necessary parts to withstand and restrain all forces that might develop during human occupancy.
(2) Portable grandstands shall be designed and manufactured so that, if any structural members required for the strength and stability of the structure have been omitted during erection, the presence of unused connection fittings shall make the omissions self-evident.
(3) The construction shall produce the strength required by the design.
(4) Portable grandstands shall not be used until all parts have been erected, or re-erected, in accordance with the approved design and specifications.
(5) The seating, walkways, railings, bracing, and supporting members shall be structurally sound.

32.7.6.2 Placement. The following shall apply to the placement of portable grandstands:

(1) Portable grandstands shall be provided with base plates, sills, floor runners, or sleepers of such area that the allowable bearing capacity of the supporting material is not exceeded.
(2) Where portable grandstands rest directly on a base where settlement can or does occur beyond that allowed by design, mud sills of suitable material having sufficient area to prevent undue or dangerous settlement shall be installed under base plates, runners, or sleepers.
(3) All bearing surfaces shall be in full contact with each other.

32.7.6.3 Prevention of Displacement. A-frames or other supports and seat stringers for portable grandstands shall be secured to prevent accidental displacement during occupancy.

32.7.6.4 Fasteners. The following shall apply to fasteners for portable grandstands:

(1) The use of nails, lag screws, and wood screws shall be permitted for holding wood parts together, provided that the following criteria are met:
    (a) Nails, lag screws, and wood screws shall not be used for demountable joinings.
    (b) Nails, lag screws, and wood screws shall not be used where their loosening or splitting of surrounding wood would jeopardize the structure or its occupants.
(2) Members in tension shall be connected at each end by not less than two bolts, rivets, or lag screws, or by approved connectors or other approved devices.
(3) All ferrous fastenings and fastening devices shall be stainless steel or hot-dipped galvanized in accordance with ASTM A 153, *Standard Specification for Zinc Coating (Hot-Dip) on Iron and Steel Hardware*.

32.7.7 Maintenance. Maintenance shall be provided as follows:

(1) The owner shall provide for not less than annual inspection and required maintenance of each grandstand to ensure safe conditions.
(2) At least biannually, the inspection shall be performed by a professional engineer or registered architect.
(3) Where required by the authority having jurisdiction, the owner shall provide certification that both inspections have been performed.

32.7.8 Folding and Telescopic Seating.

32.7.8.1 Application. Folding and telescopic seating shall be permitted only if the supporting structure has been designed to handle the loading and has the exit facilities to accommodate the occupants of the seating, as well as all other occupants.

Copyright National Fire Protection Association
Provided by IHS under license with NFPA
No reproduction or networking permitted without license from IHS
Not for Resale

32.7.8.2 Design.

32.7.8.2.1 Structural Loading. The design of folding and telescopic seating shall withstand the structural loading requirements of Chapter 35.

32.7.8.2.2 Load Tests. Load tests in accordance with accepted engineering practice shall be permitted in lieu of the design analysis for a seating unit or part thereof.

32.7.8.2.3 Manufacturer Requirements. The manufacturer shall comply with the requirements of 32.7.8.2.3.1 and 32.7.8.2.3.2.

32.7.8.2.3.1 Where required by the authority having jurisdiction, the manufacturer shall submit either of the following:

(1) Calculations verifying the design analysis prepared by a professional engineer or registered architect
(2) Report of load tests conducted by an approved, independent testing laboratory and certified by a professional engineer

32.7.8.2.3.2 Where required by the authority having jurisdiction, the manufacturer shall certify that the equipment supplied is in accordance with the design or is essentially identical to the structure tested.

32.7.8.2.4 Review and Approval.

32.7.8.2.4.1 Design and installation drawings shall be approved prior to installation, and seating shall be installed in conformance with such drawings.

32.7.8.2.4.2 The drawings specified in 32.7.8.2.4.1 shall include the following:

(1) Conformance with approved designs, which are permitted to refer to approved standard drawings, with any variations applicable to the job noted
(2) Location of the folding or telescopic seating units and details of attachments, if any
(3) Location of guards and details thereof

32.7.8.2.4.3 The owner, or the owner's duly authorized representative, shall file with the authority having jurisdiction evidence of the following:

(1) Capability of means of egress to accommodate the occupants of the seating, as well as all other occupants, based on Chapter 11
(2) Structural capacity of the site to support the folding and telescopic seating dead loads when closed and also to support the dead loads and live loads when open

32.8 Swimming Pools and Spas.

32.8.1 Scope. The requirements of this chapter shall apply to residential and public swimming pools and spas.

32.8.2 Criteria.

32.8.2.1 The design of swimming pools, foundations, and walls shall be in accordance with the requirements of Chapter 36.

32.8.2.2 Construction and operation of swimming pools shall comply with the appropriate NSPI standard in 32.8.3.4.

32.8.3 Design and Materials.

32.8.3.1 Concrete used in swimming pools shall have the minimum compressive strength and concrete cover for reinforcement as provided for in ACI 318, *Building Code Requirements for Structural Concrete.*

32.8.3.2 Unit masonry shall comply with the requirements of 32.8.3.2.1 through 32.8.3.2.3.

32.8.3.2.1 Unit masonry used in construction of swimming pools shall conform to ASTM C 90, *Standard Specification for Loadbearing Concrete Masonry Units*, with a minimum nominal thickness of 8 in. (205 mm).

32.8.3.2.2 All voids shall be filled with grout complying with ASTM C 476, *Standard Specification for Grout for Masonry.*

32.8.3.2.3 Placement of grout shall comply with ACI 530.1/ASCE 6/TMS 602, *Specification for Masonry Structures.*

32.8.3.3 Pneumatically placed concrete (shotcrete) shall comply with ACI 318, and the following also shall apply:

(1) The walls of swimming pools shall have a minimum thickness of 6 in. (150 mm), with the reinforcement centered.
(2) The concrete cover for reinforcement shall be as provided for in ACI 318.

32.8.3.4 The design, equipment, operation, installation, new construction, and rehabilitation of pools shall be in accordance with the following standards:

(1) ANSI/NSPI-1, *Standard for Public Swimming Pools*
(2) ANSI/NSPI-2, *Standard for Public Spas*
(3) ANSI/NSPI-3, *Standard for Permanently Installed Residential Spas*
(4) ANSI/NSPI-4, *Standard for Aboveground/Onground Residential Swimming Pools*
(5) ANSI/NSPI-5, *Standard for Residential Inground Swimming Pools*
(6) ANSI/NSPI-6, *Standard for Residential Portable Spas*

32.8.3.5 Pools shall be tested as follows:

(1) Complete pools shall pass a test for watertightness before being approved by the authority having jurisdiction.
(2) A pressure relief valve or hydrostatic valve shall be provided when the water table can exert sufficient hydrostatic pressure to cause the pool to be uplifted when empty or drained.

32.8.4 Barriers.

32.8.4.1 Barriers to prevent access to residential pools during use, and at times when not in use, shall be provided in accordance with ANSI/NSPI-8, *Model Barrier Code for Residential Swimming Pool, Spas, and Hot Tubs.*

32.8.4.2 Barriers for public pools shall be in accordance with the requirements of ANSI/NSPI-1.

32.9 Cooling Towers. Cooling towers shall comply with Chapter 35 and NFPA 214, *Standard on Water-Cooling Towers.*

32.10 Temporary Structures.

32.10.1 Scope.

32.10.1.1 Section 32.10 shall apply to temporary structures other than tents and temporary membrane structures.

32.10.1.2 Temporary structures associated with construction, alteration, or demolition operations shall comply with Chapter 14.

32.10.2 Location. Temporary structures as specified in 32.10.1.1 shall be separated from other structures in accordance with Chapter 7, based on the fire resistance rating of the exterior wall of the temporary structure.

Copyright National Fire Protection Association
Provided by IHS under license with NFPA
No reproduction or networking permitted without license from IHS
Not for Resale

32.11 Masonry and Concrete, Chimneys, and Fireplaces. Masonry and concrete, chimneys, and fireplaces shall comply with the requirements of this *Code* and the following standards:

(1) NFPA 31, *Standard for the Installation of Oil-Burning Equipment*
(2) NFPA 54, *National Fuel Gas Code*
(3) NFPA 211, *Standard for Chimneys, Fireplaces, Vents, and Solid Fuel-Burning Appliances*

32.12 Masonry Heaters.

32.12.1 General.

32.12.1.1 Masonry heaters shall be defined in accordance with ASTM E 1602, *Standard Guide for Construction of Solid Fuel Burning Masonry Heaters*.

32.12.1.2 Masonry heaters shall be installed as listed or installed in accordance with ASTM E 1602.

32.12.2 Seismic Reinforcing. Seismic reinforcing shall not be required within the body of a masonry heater where both of the following conditions are met:

(1) The height of the masonry heater is equal to or less than 2½ times its body width.
(2) The masonry chimney serving the heater is not supported by the body of the heater.

32.12.3 Masonry Heater Clearance.

32.12.3.1 Wood or other combustible framing shall not be placed within 4 in. (100 mm) of the outside surface of a masonry heater, unless both of the following criteria are met:

(1) The wall thickness of the firebox is not less than 8 in. (205 mm).
(2) The wall thickness of the heat exchange channels is not less than 5 in. (125 mm).

32.12.3.2 A clearance of not less than 8 in. (205 mm) shall be provided between the gas-tight capping slab of the heater and a combustible ceiling.

32.12.3.3 The required space between the heater and a combustible material shall be fully vented to allow the free flow of air around all heater surfaces.

32.13 Roof Structures.

32.13.1 General. Roof structures conforming to the requirements of Section 32.13 shall not be considered a story.

32.13.2 Height Limits.

32.13.2.1 Roof structures on buildings of Type I or Type II construction shall be not more than 28 ft (8535 mm) in height above the roof of the building.

32.13.2.2 In buildings of Type III, Type IV, or Type V construction, roof structures shall be not more than 20 ft (6100 mm) above the roof of the building.

32.13.3 Aggregate Area. The aggregate area of roof structures shall be not more than 33⅓ percent of the area of the roof of the building.

32.13.4 Construction. Roof structures shall be consistent with the required type of construction of the building and shall comply with all of the following:

(1) Fire protection shall be as required in Chapters 16 through 34.
(2) The fire resistance rating of exterior walls shall be in accordance with Table 7.3.2.1, based on the horizontal separation of the wall.
(3) The fire resistance rating of exterior bearing walls shall be in accordance with Table 7.2.1.1 for roof construction, but not less than that required by 32.13.4(2).

32.13.5 Roof Signs. Roof signs shall be designed to withstand the combination of loads as required by Section 35.15 and constructed in accordance with the manufacturer's instructions.

32.14 Towers and Spires.

32.14.1 General. The requirements of 32.14.1.1 through 32.14.1.3 shall apply to towers and spires.

32.14.1.1 Towers and spires, where enclosed, shall have exterior walls as required for the building on which they are constructed.

32.14.1.2 The framework of unenclosed towers extending more than 75 ft (23 m) above grade shall be constructed of iron, steel, or reinforced concrete.

32.14.1.3 The roof covering of towers and spires shall be as required for the roof of the building.

32.14.2 Radio and Television Masts. Skeleton towers used as radio and television masts, and located on the roof of a building or structure, shall be constructed of noncombustible materials where over 25 ft (7620 mm) high and shall be supported on a noncombustible framework direct to the ground.

32.15 Rooftop Heliports. Rooftop heliports shall be designed according to NFPA 418, *Standard for Heliports*, and the design loads of heliports shall be in accordance with 35.14.3.

Chapter 33 High-Rise Buildings

33.1 General Requirements.

33.1.1 Application. The provisions of the applicable occupancy Chapters 16 through 30 shall apply, except as modified by this chapter.

33.1.2 Multiple Occupancies. See Section 6.2.

33.1.3 Construction Requirements.

33.1.3.1 The reductions permitted in 33.1.3.2 and 33.1.3.3 in the minimum construction type specified in Table 7.2.1.1 shall be permitted for sprinklered high-rise buildings with exits constructed as smokeproof enclosures and sprinkler control valves equipped with supervisory-initiating devices and waterflow initiating devices for each floor.

33.1.3.2 For buildings, other than mercantile occupancies or industrial and storage occupancies with ordinary and high hazard contents exceeding the maximum allowable quantities per control area as set fort in 34.1.3, Type I (442) construction shall be permitted to be reduced to Type I (332), and Type I (332) construction shall be permitted to be reduced to Type II (222).

33.1.3.3 For buildings 120 ft (36.6 m) or less in height containing occupancies other than mercantile occupancies or industrial and storage occupancies with moderate and high hazard contents, Type II (222) construction shall be permitted to be reduced to Type II (111), except that columns supporting more than one floor shall not be less than 2-hour fire resistance–rated construction.

Copyright National Fire Protection Association
Provided by IHS under license with NFPA
No reproduction or networking permitted without license from IHS
Not for Resale

33.2 Protection.

33.2.1 Detection, Alarm, and Communications Systems.

33.2.1.1* A fire alarm system using an approved emergency voice/alarm communication system shall be installed in accordance with Section 55.2.

33.2.1.2 Two-way telephone communication service shall be in accordance with the following:

(1) Two-way telephone communication service shall be provided for fire department use as follows:
   (a) The system shall be in accordance with *NFPA 72, National Fire Alarm Code*.
   (b) The system shall operate between the emergency command center and every elevator car, every elevator lobby, and each floor level of exit stairs.
(2) The requirement of 33.2.1.2(1) shall not apply where the fire department radio system is approved as an equivalent system.

33.2.2* Extinguishment Requirements.

33.2.2.1 High-rise buildings shall be protected throughout by an approved, supervised automatic sprinkler system in accordance with NFPA 13, *Standard for the Installation of Sprinkler Systems*, and 55.3.2.

33.2.2.2 A sprinkler control valve and a waterflow device shall be provided for each floor.

33.2.3 Exit Stair Enclosures.

33.2.3.1 All vertical exit stair enclosures shall be smokeproof enclosures in accordance with 11.2.3.

33.2.3.2 Stair enclosures 75 ft (23 m) or more in height shall include fire doors tested under positive pressure, with the neutral plane at 40 in. (1015 mm) in accordance with NFPA 252, *Standard Methods of Fire Tests of Door Assemblies*.

33.2.4 Emergency Lighting and Standby Power.

33.2.4.1 Emergency lighting in accordance with Section 11.9 shall be provided.

33.2.4.2* The requirements for standby power shall be as specified in 33.2.4.2.1 through 33.2.4.2.4.

33.2.4.2.1 Type 60, Class I, Level I, standby power in accordance with Article 701 of NFPA 70, *National Electrical Code*, as noted in Chapter 52, and NFPA 110, *Standard for Emergency and Standby Power Systems*, shall be provided.

33.2.4.2.2 The standby power system shall have a capacity and rating sufficient to supply all required equipment.

33.2.4.2.3 Selective load pickup and load shedding shall be permitted in accordance with Chapter 52.

33.2.4.2.4 The standby power system shall be connected to the following:

(1) Electric fire pump
(2) Emergency command center equipment and lighting
(3) Not less than one elevator serving all floors, with standby power transferable to any elevator
(4) Mechanical equipment for smokeproof enclosures
(5) Mechanical equipment required to conform to the requirements of Chapter 50

33.2.4.3 Power for detection, alarm, and communications systems shall be in accordance with *NFPA 72*.

33.2.5* Emergency Command Center. Emergency command centers shall be in accordance with 33.2.5.1 through 33.2.5.6.

33.2.5.1 The location, design, and fire department access of the emergency command center shall be approved by the fire department. [**1:**11.9.1]

33.2.5.2 The emergency command center shall be separated from the remainder of the building by a fire barrier having a fire resistance rating of not less than 1 hour. [**1:**11.9.2]

33.2.5.3 The emergency command center room shall be a minimum 96 ft^2 (8.9 m^2) with a minimum dimension of 8 ft (2440 mm). [**1:**11.9.3]

33.2.5.4 The following shall be provided in the emergency command center:

(1) The fire department communication unit
(2) A telephone for fire department use with controlled access to the public telephone system
(3) Schematic building plans indicating the typical floor plan and detailing the building core means of egress, fire protection systems, fire-fighting equipment, and fire department access
(4) Work table

[**1:**11.9.4]

33.2.5.5 Where provided, the following devices or functions shall be provided within the emergency command center:

(1) The emergency voice/alarm communication system unit
(2) Fire detection and alarm system annunciator unit
(3) Annunciator visually indicating the location of the elevators and whether they are operational
(4) Status indicators and controls for air-handling systems
(5) Controls for unlocking stairway doors simultaneously
(6) Sprinkler valve and waterflow detector display panels
(7) Emergency and standby power status indicators
(8) Fire pump status indicators
(9) Generator supervision devices and manual start and transfer features
(10) Public address system, where specifically required by NFPA 1, *Uniform Fire Code*
(11) Controls required for smoke control

[**1:**11.9.5]

33.2.5.6 Emergency Command Center Acceptance Testing. Devices, equipment, components, and sequences shall be individually tested in accordance with appropriate standards and manufacturers' documented instructions. [**1:**11.9.6]

33.2.6 Smoke Control. Smoke control systems shall be designed in accordance with Section 55.7.

Chapter 34 High Hazard Contents

34.1 General Requirements.

34.1.1* Applicability.

34.1.1.1 Occupancies containing high hazard contents shall comply with this chapter in addition to other applicable requirements of this *Code*.

34.1.1.2 Buildings, and portions thereof, containing high hazard contents limited to the following shall not be required to comply with this chapter:

Copyright National Fire Protection Association
Provided by IHS under license with NFPA
No reproduction or networking permitted without license from IHS
Not for Resale

(1) Flammable and combustible liquids associated with application of flammable finishes and complying with NFPA 33, *Standard for Spray Application Using Flammable or Combustible Materials*, and NFPA 34, *Standard for Dipping and Coating Processes Using Flammable or Combustible Liquids*
(2) Flammable and combustible liquids associated with wholesale and retail sales and storage in mercantile occupancies and complying with NFPA 30, *Flammable and Combustible Liquids Code*
(3) Class IIIA and Class IIIB combustible liquid solvents in closed systems employing listed cleaning equipment complying with NFPA 32, *Standard for Drycleaning Plants*
(4) Refrigerants and refrigerant oil contained within closed-cycle refrigeration systems complying with NFPA 1, *Uniform Fire Code*, and the *Uniform Mechanical Code*, as referenced in Chapter 50
(5) Flammable and combustible liquid beverages in liquor stores and distributors without bulk storage
(6) High hazard contents stored or used in farm buildings or similar occupancies for on-premise agricultural use
(7) Corrosive materials in stationary batteries utilized for facility emergency power, uninterrupted power supply, or similar purposes, provided that the batteries are provided with safety venting caps and ventilation is provided in accordance with NFPA 1
(8) Corrosive materials displayed in original packaging in mercantile occupancies and intended for personal or household use or as building materials
(9) Aerosol products in storage or mercantile occupancies and complying with NFPA 30B, *Code for the Manufacture and Storage of Aerosol Products*
(10) Flammable and combustible liquids storage tank buildings meeting the requirements of 2.3.4 of NFPA 30
(11) Flammable and combustible liquids storage tank vaults meeting the requirements of 2.2.7 of NFPA 30
(12) Flammable and combustible liquids process buildings meeting the requirements of Section 5.3 of NFPA 30
(13) Installation of fuel gas distribution systems and associated equipment in accordance with NFPA 54, *National Fuel Gas Code*, and NFPA 58, *Liquefied Petroleum Gas Code*, as adopted by Chapters 49 and 50
(14) Consumer fireworks, 1.4G in mercantile occupancies complying with NFPA 1124, *Code for the Manufacture, Transportation, Storage, and Retail Sales of Fireworks and Pyrotechnic Articles*

34.1.2 Material Classification.

34.1.2.1 General. Hazardous materials shall be classified in accordance with 6.3.2.4 and the definitions in Chapter 3.

34.1.2.2 Multiple Hazards. Buildings, and portions thereof, containing high hazard contents that are classified in more than one hazard level, as set forth in 6.3.2.4, shall conform to the code requirements for each of the applicable protection levels specified in Section 34.3.

34.1.3 Quantity Limits.

34.1.3.1 General. Maximum allowable quantities of hazardous materials per control area shall be as specified in Table 34.1.3.1, except as modified by 34.1.3.2 and 34.1.3.3.

Copyright National Fire Protection Association
Provided by IHS under license with NFPA
No reproduction or networking permitted without license from IHS
Not for Resale

Table 34.1.3.1 Maximum Allowable Quantity (MAQ) of Hazardous Materials per Control Area[a]

Material	Class	High Hazard Contents Level	Storage			Use—Closed Systems			Use—Open Systems	
			Solid Pounds (ft^3)	Liquid Gallons (lb)	Gas[b] (ft^3)	Solid Pounds (ft^3)	Liquid Gallons (lb)	Gas[b] (ft^3)	Solid Pounds (ft^3)	Liquid Gallons (lb)
Physical Hazard Materials										
Combustible liquid[c,d,e,f]	II IIIA IIIB	2 or 3 2 or 3 NA	NA	120[g,h] 330[g,h] 13,200[g,i]	NA	NA	120[h] 330[h] 13,200[i]	NA	NA	30[h] 80[h] 13,200[i]
Consumer fireworks	1.4G	3	125[c,j,k]	NA	NA	NA	NA	NA	NA	NA
Cryogenic liquid	Flammable Oxidizing	2 3	NA NA	45[h] 45[h]	NA NA	NA NA	45[h] 45[h]	NA NA	NA NA	10[h] 10[h]
Explosives	NA	1	1[g,l,m,n]	(1)[g,l,n]	NA	1/4[l]	(1/4)[l]	NA	1/4[l]	(1/4)[l]
Flammable gas[d]	Gaseous Liquefied Liquefied petroleum (LP)	2 2 2	NA NA NA	NA 30[g,h] 300[o,p]	1,000[g,h] NA NA	NA NA NA	NA 30[g,h] 300	1,000[g,h] NA NA	NA NA NA	NA NA NA
Flammable liquid[c,d,f,q]	IA IB and IC Combination (IA, IB, IC)	2 or 3	NA	30[g,h] 120[g,h] 120[g,h,r]	NA	NA	30[h] 120[g,h] 120[h,r]	NA	NA	10[h] 30[g,h] 30[h,r]
Flammable solid	NA	3	125[g,h]	NA	NA	125[h]	NA	NA	25[g,h]	NA
Organic peroxide	Unclassified detonatable I II II IV V	1 1 2 3 NA NA	1[g,l] 5[g,h] 50[g,h] 125[g,h] NL NL	(1)[g,l] (5)[g,h] (50)[g,h] (125)[g,h] NL NL	NA NA NA NA NA NA	1/4[l] 1[h] 50[h] 125[h] NL NL	(1/4)[l] (1)[h] (50)[h] (125)[h] NL NL	NA NA NA NA NA NA	1/4[l] 1[h] 10[h] 25[h] NL NL	(1/4)[l] (1)[h] (10)[h] (25)[h] NL NL
Oxidizer	4 3[j] 2 1	1 2 or 3 3 NA	1[g,l] 10[g,h] 250[g,h] 4,000[g,i]	(1)[g,l] (10)[g,h] (250)[g,h] (4,000)[g,i]	NA NA NA NA	1/4[l] 2[h] 250[h] 4,000[i]	(1/4)[l] (2)[h] (250)[h] (4,000)[i]	NA NA NA NA	1/4[l] 2[h] 50[h] 1,000[i]	(1/4)[l] (2)[h] (50)[h] (1,000)[i]
Oxidizing gas	Gaseous Liquefied	3 NA	NA NA	NA 15[g,h]	1,500[g,h] NA	NA NA	NA 15[g,h]	1,500[g,h] NA	NA NA	NA NA
Pyrophoric	NA	2	4[g,l]	(4)[g,l]	50[g,l]	1[l]	(1)[l]	10[g,l]	0	0
Unstable (reactive)	4 3 2 1	1 1 or 2 2 NA	1[g,l] 5[g,h] 50[g,h] NL	(1)[g,l] (5)[g,h] (50)[g,h] NL	10[g,l] 50[g,h] 750[g,h] NL	1/4[l] 1[h] 50[h] NL	(1/4)[l] (1)[h] (50)[h] NL	2[g,l] 10[g,h] 750[g,h] NL	1/4[l] 1[h] 10[h] NL	(1/4)[l] (1)[h] (10)[h] NL
Water-reactive	3 2 1	2 3 NA	5[g,h] 50[g,h] NL	(5)[g,h] (50)[g,h] NL	NA NA NA	5[h] 50[h] NL	(5)[h] (50)[h] NL	NA NA NA	1[h] 10[h] NL	(1)[h] (10)[h] NL

Copyright National Fire Protection Association
Provided by IHS under license with NFPA
No reproduction or networking permitted without license from IHS
Not for Resale

Table 34.1.3.1 *Continued*

Material	Class	High Hazard Contents Level	Storage			Use—Closed Systems			Use—Open Systems	
			Solid Pounds (ft^3)	Liquid Gallons (lb)	Gas[b] (ft^3)	Solid Pounds (ft^3)	Liquid Gallons (lb)	Gas[b] (ft^3)	Solid Pounds (ft^3)	Liquid Gallons (lb)
Health Hazard Materials										
Corrosive	NA	4	5,000[g,h]	500[g,h]	810[g,h,s]	5,000[h]	500[h]	810[g,h,s]	1,000[h]	100[h]
Highly toxic	NA	4	10[g,h]	(10)[g,h]	20[h,t]	10[h]	(10)[h]	20[h,t]	3[h]	(3)[h]
Toxic	NA	4	500[g,h]	(500)[g,h]	810[g,h]	500[h]	(500)[h]	810[g,h]	125[h]	(125)[h]

For SI units, 1 lb = 0.454 kg; 1 ft^3 = 0.0283 m^3; 1 gal = 3.785 L.

NA: Not applicable. NL: Not limited.

[a] See 34.1.3.2 for exceptions to tabular amounts. For use of control areas, see 34.2.4. Table values in parentheses correspond to the unit name in parentheses at the top of the column. The aggregate quantity in use and storage is not permitted to exceed the quantity listed for storage. In addition, quantities in specific occupancies are not permitted to exceed the limits in 34.1.3.2.

[b] Measured at 70°F (21°C) and 14.7 psi (30 kPa).

[c] Inside a building, the maximum capacity of a combustible liquid storage system that is connected to a fuel oil piping system is permitted to be 660 gal (2,500 L), provided that such system conforms to NFPA 31, *Standard for the Installation of Oil-Burning Equipment*.

[d] Flammable and combustible liquids and flammable gases in the fuel tanks of mobile equipment or vehicles are permitted to exceed the MAQ where the equipment is stored and operated in accordance with the fire code.

[e] In storage, low, and ordinary hazard occupancies, the storage of Class II combustible liquids is required to be limited to a maximum quantity of 1,375 gal (5204 L); Class IIIA combustible liquids are required to be limited to a maximum quantity of 2,750 gal (10,409 L); and Class IIIB combustible liquids are required to be limited to a maximum quantity of 13,750 gal (52,044 L) where stored in accordance with all the requirements in NFPA 30 for general-purpose warehouses.

[f] The quantity of fuel in aircraft in hangars is required to be in accordance with NFPA 409, *Standard on Aircraft Hangars*.

[g] Quantities are permitted to be increased 100 percent where stored in approved cabinets, gas cabinets, exhausted enclosures, explosives magazines, or safety cans, as appropriate for the material stored, in accordance with NFPA 1. Where footnote h also applies, the increase for both footnotes is permitted to be applied accumulatively.

[h] Maximum quantities are permitted to be increased 100 percent in buildings equipped throughout with an automatic sprinkler system in accordance with NFPA 13, *Standard for the Installation of Sprinkler Systems*. Where footnote g also applies, the increase for both footnotes is permitted to be applied accumulatively.

[i] The permitted quantities are not limited in a building equipped throughout with an automatic sprinkler system in accordance with NFPA 13.

[j] A maximum quantity of 200 lb (91 kg) of solid or 20 gal (76 L) of liquid Class 3 oxidizers is permitted where such materials are necessary for maintenance purposes, operation, or sanitation of equipment. Storage containers and the manner of storage are required to be approved.

[k] Unless the actual weight of the pyrotechnic composition of the consumer fireworks, 1.4G, is known, 25 percent of the gross weight of the fireworks, including packaging, is permitted to be used to determine the weight of the fireworks for the purpose of this table.

[l] Permitted only in buildings equipped throughout with an automatic sprinkler system in accordance with NFPA 13.

[m] Maximum quantities of black powder, smokeless propellant, and small arms primers stored or displayed in mercantile occupancies or stored in one- or two-family dwellings are permitted to exceed the amount specified by this table where such storage complies with the requirements of NFPA 495, *Explosive Materials Code*, Chapter 13.

[n] In lieu of the maximum allowable quantity limit per control area, the maximum aggregate quantity per building of special explosive devices in industrial, mercantile, and storage occupancies is required to be 50 lb (23 kg).

[o] Additional storage locations are required to be separated by a minimum of 300 ft (92 m).

[p] In mercantile occupancies, storage of LP-Gas is limited to a maximum of 200 lb (91 kg) in nominal 1 lb (0.45 kg) LP-Gas containers.

[q] In storage, low, and ordinary hazard occupancies, the storage of Class IA flammable liquids is not permitted, and the combination storage of Class IB and Class IC flammable liquids is required to be limited to a maximum quantity of 660 gal (2,500 L) where stored in accordance with all the requirements in NFPA 30 for general-purpose warehouses.

[r] Containing not more than the maximum allowable quantity per control area of Class IA, Class IB, or Class IC flammable liquids.

[s] A single cylinder containing 150 lb (68 kg) or less of anhydrous ammonia in a single control area in a nonsprinklered building is considered to be the maximum allowable quantity. Two cylinders, each containing 150 lb (68 kg) or less, in a single control area is considered to be the maximum allowable quantity, provided that the building is equipped throughout with an automatic sprinkler system in accordance with NFPA 13.

[t] Allowed only where stored in approved, exhausted gas cabinets or exhausted enclosures, as specified in NFPA 1.

34.1.3.2 Special Occupancy Limits. The maximum allowable quantities of hazardous materials per control area in assembly, ambulatory health care, business, educational, day-care, health care, detention and correctional, and residential occupancies consisting of lodging and rooming houses, hotels, dormitories, apartments, and residential board and care facilities shall be as specified in Table 34.1.3.2(a) through Table 34.1.3.2(h).

Copyright National Fire Protection Association
Provided by IHS under license with NFPA
No reproduction or networking permitted without license from IHS
Not for Resale

Table 34.1.3.2(a) Maximum Allowable Quantities (MAQ) of Hazardous Materials per Control Area in Assembly Occupancies

Material	Class	Solid	Liquid	Gas[a] (at NTP)
Flammable and combustible Liquid[b,c]	I and II combined IIIA IIIB	NP NP NP	10 gal 60 gal 120 gal	NP NP NP
Cryogenic liquid	Flammable Oxidizing	NP NP	10 gal 10 gal	NP NP
Explosives[d,e,f,g]	NP	NP	NP	NP
Flammable gas[c,h]	Gaseous Liquefied	NP NP	NP 20 lb	NP NP
Consumer fireworks	1.4G	NP	NP	NP
Flammable solid	NP	5 lb	NP	NP
Oxidizers	4 3 2 1	NP 10 lb[i] 250 lb 4,000 lb	NP 1 gal[i] 25 gal 400 gal	NP NP NP NP
Oxidizing gas[h]	Gaseous Liquefied	NP NP	NP 15 gal	NP NP
Organic peroxides	Unclassified detonatable I II III IV V	NP NP NP 1,500 lb 100,000 lb NL	NP NP NP 1,500 lb 100,000 lb NL	NP NP NP NP NP NP
Pyrophoric materials	NP	1 lb	1 lb	NP
Unstable reactives	4 3 2 1	¼ lb 1 lb 10 lb NL	¼ lb 1 lb 10 lb NL	NP NP NP[h] NP
Water-reactive	3 2 1	1 lb 10 lb NL	1 lb 10 lb NL	NP NP NP
Corrosives	NP	1,000 lb	100 gal	NP
Highly toxic	NP	3 lb	3 lb	NP[j]
Toxic	NP	125 lb	125 lb	NP[j]

For SI units, 1 lb = 0.454 kg; 1 gal = 3.785 L; 1 ft^3 = 0.0283 m^3.

NTP: Normal temperature and pressure [measured at 70°F (21°C) and 14.7 psi (30 kPa)]. NP: Not permitted. NL: Not limited.

[a]Unlimited amounts of gas are permitted to be used for personal medical or emergency medical use.

[b]Storage in excess of 10 gal (38 L) of Class I and Class II liquids combined or 60 gal (227 L) of Class IIIA liquids is permitted where stored in safety cabinets with an aggregate quantity not to exceed 180 gal (681 L).

[c]Fuel in the tank of operating mobile equipment is permitted to exceed the specified quantity where the equipment is operated in accordance with the fire code.

[d]The use of explosive materials required by federal, state, or municipal agencies while engaged in normal or emergency performance of duties is not required to be limited. The storage of explosive materials is required to be in accordance with the requirements of NFPA 495.

[e]The storage and use of explosive materials in medicines and medicinal agents in the forms prescribed by the official United States Pharmacopoeia or the National Formulary are not required to be limited.

[f]The storage and use of propellant-actuated devices or propellant-actuated industrial tools manufactured, imported, or distributed for their intended purposes are required to be limited to 50 lb (23 kg) net explosive weight.

[g]The storage and use of small arms ammunition, and components thereof, are permitted where in accordance with NFPA 495.

[h]Fuel or oxidizing gas used for maintenance, repair, and operation of equipment is not permitted to exceed 250 ft^3 (7.1 m^3).

[i]A maximum quantity of 200 lb (91 kg) of solid or 20 gal (76 L) of liquid Class 3 oxidizer is permitted where such materials are necessary for maintenance purposes, operation, or sanitation of equipment. Storage containers and the manner of storage are required to be approved.

[j]Gas cylinders not exceeding 20 ft^3 (0.57 m^3) at NTP are permitted in gas cabinets or fume hoods.

Copyright National Fire Protection Association
Provided by IHS under license with NFPA
No reproduction or networking permitted without license from IHS
Not for Resale

Table 34.1.3.2(b) Maximum Allowable Quantities (MAQ) of Hazardous Materials per Control Area in Ambulatory Health Care Occupancies

Material	Class	Solid	Liquid	Gas[a] (at NTP)
Flammable and combustible liquid[b,c]	I and II combined IIIA IIIB	NP NP NP	10 gal 60 gal 120 gal[d]	NP NP NP
Cryogenic liquid	Flammable Oxidizing	NP NP	10 gal 10 gal	NP NP
Explosives[e,f,g]	NP	NP	NP	NP
Flammable gas[c,h]	Gaseous Liquefied	NP NP	NP 20 lb	NP NP
Consumer fireworks	1.4G	NP	NP	NP
Flammable solid	NP	5 lb	NP	NP
Oxidizers	4 3 2 1	NP 10 lb[i] 250 lb 4,000 lb[d]	NP 1 gal[i] 25 gal 400 gal[d]	NP NP NP NP
Oxidizing gas	Gaseous Liquefied	NP NP	NP 15 gal	per NFPA 99, *Standard for Health Care Facilities* NP
Organic peroxides	Unclassified detonatable I II III IV V	NP NP NP 1,500 lb 100,000 lb NL	NP NP NP 1,500 lb 100,000 lb NL	NA NA NA NA NA NA
Pyrophoric materials	NP	NP	NP	NP
Unstable reactives	4 3 2 1	NP NP 10 lb NL	NP NP 10 lb NL	NP NP NP[h] NP
Water-reactive	3 2 1	1 lb 10 lb NL	1 lb 10 lb NL	NA NA NA
Corrosives	NP	1,000 lb	100 gal	NP
Highly toxic	NP	3 lb	3 lb	NP[j]
Toxic	NP	125 lb	125 lb	NP[j]

For SI units, 1 lb = 0.454 kg; 1 gal = 3.785 L; 1 ft^3 = 0.0283 m^3.

NTP: Normal temperature and pressure [70°F (21°C) and 14.7 psi (30 kPa)]. NP: Not permitted. NA: Not applicable. NL: Not limited.

[a]Unlimited amounts of gas are permitted to be used for personal medical or emergency medical use.

[b]Storage in excess of 10 gal (38 L) of Class I and Class II liquids combined or 60 gal (227 L) of Class IIIA liquids is permitted where stored in safety cabinets with an aggregate quantity not to exceed 180 gal (681 L).

[c]Fuel in the tank of operating mobile equipment is permitted to exceed the specified quantity where the equipment is operated in accordance with the fire code.

[d]The permitted quantities are not limited in a building protected throughout by automatic sprinkler systems in accordance with NFPA 13.

[e]The use of explosive materials required by federal, state, or municipal agencies while engaged in normal or emergency performance of duties is not required to be limited. The storage of explosive materials is required to be in accordance with the requirements of NFPA 495.

[f]The storage and use of explosive materials in medicines and medicinal agents in the forms prescribed by the official United States Pharmacopoeia or the National Formulary are not required to be limited.

[g]The storage and use of propellant-actuated devices or propellant-actuated industrial tools manufactured, imported, or distributed for their intended purposes are required to be limited to 50 lb (23 kg) net explosive weight.

[h]Fuel or oxidizing gas used for maintenance, repair, and operation of equipment is not permitted to exceed 250 ft^3 (7.1 m^3).

[i]A maximum quantity of 200 lb (91 kg) of solid or 20 gal (76 L) of liquid Class 3 oxidizer is permitted where such materials are necessary for maintenance purposes, operation, or sanitation of equipment. Storage containers and the manner of storage are required to be approved.

[j]Gas cylinders not exceeding 20 ft^3 (0.57 m^3) at NTP are permitted in gas cabinets or fume hoods.

Copyright National Fire Protection Association
Provided by IHS under license with NFPA
No reproduction or networking permitted without license from IHS
Not for Resale

Table 34.1.3.2(c) Maximum Allowable Quantities (MAQ) of Hazardous Materials per Control Area in Business Occupancies

Material	Class	Solid	Liquid	Gas[a] (at NTP)
Flammable and combustible liquid[b,c]	I and II combined IIIA IIIB	NP NP NP	10 gal 60 gal 120 gal	NP NP NP
Cryogenic liquid	Flammable	NP	10 gal	NP
	Oxidizing	NP	10 gal	NP
Explosives[d,e,f,g]	NP	¼ lb	¼ lb	NP
Flammable gas[c]	Gaseous Liquefied	NP NP	NP 20 lb	1,000 ft^3 NP
Consumer fireworks	1.4G	NP	NP	NP
Flammable solid	NP	5 lb	NP	NP
Oxidizers	4 3 2 1	NP 10 lb[h] 250 lb 4,000 lb	NP 1 gal[h] 25 gal 400 gal	NP NP NP NP
Oxidizing gas	Gaseous Liquefied	NP NP	NP 15 gal	1,500 ft^3 NP
Organic peroxides	Unclassified detonatable I II III IV V	NP NP NP 1,500 lb 100,000 lb NL	NP NP NP 1,500 lb 100,000 lb NL	NP NP NP NP NP NP
Pyrophoric materials	NP	1 lb	1 lb	10 ft^3
Unstable reactives	4 3 2 1	¼ lb 1 lb 10 lb NL	¼ lb 1 lb 10 lb NL	2 ft^3 10 ft^3 750 ft^3 NL
Water-reactive	3 2 1	1 lb 10 lb NL	1 lb 10 lb NL	NP NP NP
Corrosives	NP	1,000 lb	100 gal	810 ft^3
Highly toxic[i]	NP	3 lb	3 lb	20 ft^3
Toxic[i]	NP	125 lb	125 lb	810 ft^3

For SI units, 1 lb = 0.454 kg; 1 gal = 3.785 L; 1 ft^3 = 0.0283 m^3.

NTP: Normal temperature and pressure [measured at 70°F (21°C) and 14.7 psi (30 kPa)]. NP: Not permitted. NL: Not limited.

[a]Unlimited amounts of gas are permitted to be used for personal medical or emergency medical use.

[b]Storage in excess of 10 gal (38 L) of Class I and Class II liquids combined or 60 gal (227 L) of Class IIIA liquids is permitted where stored in safety cabinets with an aggregate quantity not to exceed 180 gal (681 L).

[c]Fuel in the tank of operating mobile equipment is permitted to exceed the specified quantity where the equipment is operated in accordance with the fire code.

[d]The use of explosive materials required by federal, state, or municipal agencies while engaged in normal or emergency performance of duties is not required to be limited. The storage of explosive materials is required to be in accordance with the requirements of NFPA 495.

[e]The storage and use of explosive materials in medicines and medicinal agents in the forms prescribed by the official United States Pharmacopoeia or the National Formulary are not required to be limited.

[f]The storage and use of propellant-actuated devices or propellant-actuated industrial tools manufactured, imported, or distributed for their intended purposes are required to be limited to 50 lb (23 kg) net explosive weight.

[g]The storage and use of small arms ammunition, and components thereof, are permitted where in accordance with NFPA 495.

[h]A maximum quantity of 200 lb (91 kg) of solid or 20 gal (76 L) of liquid Class 3 oxidizer is permitted where such materials are necessary for maintenance purposes, operation, or sanitation of equipment. Storage containers and the manner of storage are required to be approved.

[i]Gas cylinders not exceeding 20 ft^3 (0.57 m^3) at NTP are permitted in gas cabinets or fume hoods.

Copyright National Fire Protection Association
Provided by IHS under license with NFPA
No reproduction or networking permitted without license from IHS
Not for Resale

Table 34.1.3.2(d) Maximum Allowable Quantities (MAQ) of Hazardous Materials per Control Area in Educational Occupancies

Material	Class	Solid	Liquid	Gas[a] (at NTP)
Flammable and combustible liquid[b,c]	I and II combined IIIA IIIB	NP NP NP	10 gal 60 gal 120 gal[d]	NP NP NP
Cryogenic liquid	Flammable Oxidizing	NP NP	10 gal 10 gal	NP NP
Explosives[e,f,g,h]	NP	NP	NP	NP
Flammable gas[c,i]	Gaseous Liquefied[j]	NP NP	NP 20 lb	NP NP
Consumer fireworks	1.4G	NP	NP	NP
Flammable solid	NP	5 lb	NP	NP
Oxidizers	4 3 2 1	NP 10 lb[k] 250 lb 4,000 lb[d]	NP 1 gal[k] 25 gal 400 gal[d]	NP NP NP NP
Oxidizing gas[i]	Gaseous Liquefied	NP NP	NP 15 gal	NP NP
Organic peroxides	Unclassified detonatable I II III IV V	NP NP NP 1,500 lb 100,000 lb NL	NP NP NP 1,500 lb 100,000 lb NL	NP NP NP NP NP NP
Pyrophoric materials	NP	NP	NP	NP
Unstable reactives	4 3 2 1	NP NP 10 lb NL	NP NP 10 lb NL	2 ft^3 NP NP[i] NP
Water-reactive	3 2 1	1 lb 10 lb NL	1 lb 10 lb NL	NA NA NA
Corrosives	NP	1,000 lb	100 gal	NP
Highly toxic	NP	3 lb	3 lb	NP[l]
Toxic	NP	125 lb	125 lb	NP[l]

For SI units, 1 lb = 0.454 kg; 1 gal = 3.785 L; 1 ft^3 = 0.0283 m^3; 1 ft = 0.3048 m.

NTP: Normal temperature and pressure [measured at 70°F (21°C) and 14.7 psi (30 kPa)]. NP: Not permitted. NL: Not limited. NA: Not applicable.

[a]Unlimited amounts of gas are permitted to be used for personal medical or emergency medical use.

[b]Storage in excess of 10 gal (38 L) of Class I and Class II liquids combined or 60 gal (227 L) of Class IIIA liquids is permitted where stored in safety cabinets with an aggregate quantity not to exceed 180 gal (681 L).

[c]Fuel in the tank of operating mobile equipment is permitted to exceed the specified quantity where the equipment is operated in accordance with the fire code.

[d]The permitted quantities are not limited in a building protected throughout by automatic sprinkler systems in accordance with NFPA 13.

[e]The use of explosive materials required by federal, state, or municipal agencies while engaged in normal or emergency performance of duties is not required to be limited. The storage of explosive materials is required to be in accordance with the requirements of NFPA 495.

[f]The storage and use of explosive materials in medicines and medicinal agents in the forms prescribed by the official United States Pharmacopoeia or the National Formulary are not required to be limited.

[g]The storage and use of propellant-actuated devices or propellant-actuated industrial tools manufactured, imported, or distributed for their intended purposes are required to be limited to 50 lb (23 kg) net explosive weight.

[h]The storage and use of small arms ammunition, and components thereof, are permitted where in accordance with NFPA 495.

[i]Fuel or oxidizing gas used for maintenance, repair, and operation of equipment is not permitted to exceed 250 ft^3 (7.1 m^3).

[j]Storage in laboratories only; additional 20 lb units where minimum 20 ft (6.1 m) separation is provided.

[k]A maximum quantity of 200 lb (91 kg) of solid or 20 gal (76 L) of liquid Class 3 oxidizer is permitted where such materials are necessary for maintenance purposes, operation, or sanitation of equipment. Storage containers and the manner of storage are required to be approved.

[l]Gas cylinders not exceeding 20 ft^3 (0.57 m^3) at NTP are permitted in gas cabinets or fume hoods.

Copyright National Fire Protection Association
Provided by IHS under license with NFPA
No reproduction or networking permitted without license from IHS
Not for Resale

Table 34.1.3.2(e) Maximum Allowable Quantities (MAQ) of Hazardous Materials per Control Area in Day-Care Occupancies

Material	Class	Solid	Liquid	Gas[a] (at NTP)
Flammable and combustible liquid[b,c]	I and II combined	NP	10 gal	NP
	IIIA	NP	60 gal	NP
	IIIB	NP	120 gal[d]	NP
Cryogenic liquid	Flammable	NP	10 gal	NP
	Oxidizing	NP	10 gal	NP
Explosives[e,f,g]	NP	NP	NP	NP
Flammable gas[c,h]	Gaseous	NP	NP	NP
	Liquefied	NP	20 lb	NP
Consumer fireworks	1.4G	NP	NP	NP
Flammable solid	NP	5 lb	NP	NP
Oxidizers	4	NP	NP	NP
	3	10 lb[d]	1 gal[i]	NP
	2	250 lb	25 gal	NP
	1	4,000 lb[d]	400 gal[d]	NP
Oxidizing gas[h]	Gaseous	NP	NP	NP
	Liquefied	NP	15 gal	NP
Organic peroxides	Unclassified detonatable	NP	NP	NP
	I	NP	NP	NP
	II	NP	NP	NP
	III	1,500 lb	1,500 lb	NP
	IV	100,000 lb	100,000 lb	NP
	V	NL	NL	NP
Pyrophoric materials	NA	NP	NP	NP
Unstable reactives	4	NP	NP	NP
	3	NP	NP	NP
	2	10 pounds	10 pounds	NP[h]
	1	NL	NL	NP
Water-reactive	3	1 lb	1 lb	NA
	2	10 lb	10 lb	NA
	1	NL	NL	NA
Corrosives	NP	1,000 lb	100 gal	NP
Highly toxic	NP	3 lb	3 lb	NP[j]
Toxic	NP	125 lb	125 lb	NP[j]

For SI units, 1 lb = 0.454 kg; 1 gal = 3.785 L; 1 ft^3 = 0.0283 m^3.

NTP: Normal temperature and pressure [measured at 70°F (21°C) and 14.7 psi (30 kPa)]. NP: Not permitted. NL: Not limited. NA: Not applicable.

[a]Unlimited amounts of gas are permitted to be used for personal medical or emergency medical use.

[b]Storage in excess of 10 gal (38 L) of Class I and Class II liquids combined or 60 gal (227 L) of Class IIIA liquids is permitted where stored in safety cabinets with an aggregate quantity not to exceed 180 gal (681 L).

[c]Fuel in the tank of operating mobile equipment is permitted to exceed the specified quantity where the equipment is operated in accordance with the fire code.

[d]The permitted quantities are not limited in a building protected throughout by automatic sprinkler systems in accordance with NFPA 13.

[e]The use of explosive materials required by federal, state, or municipal agencies while engaged in normal or emergency performance of duties is not required to be limited. The storage of explosive materials is required to be in accordance with the requirements of NFPA 495.

[f]The storage and use of explosive materials in medicines and medicinal agents in the forms prescribed by the official United States Pharmacopoeia or the National Formulary are not required to be limited.

[g]The storage and use of propellant-actuated devices or propellant-actuated industrial tools manufactured, imported, or distributed for their intended purposes are required to be limited to 50 lb (23 kg) net explosive weight.

[h]Fuel or oxidizing gas used for maintenance, repair, and operation of equipment is not permitted to exceed 250 ft^3 (7.1 m^3).

[i]A maximum quantity of 200 lb (91 kg) of solid or 20 gal (76 L) of liquid Class 3 oxidizer is permitted where such materials are necessary for maintenance purposes, operation, or sanitation of equipment. Storage containers and the manner of storage are required to be approved.

[j]Gas cylinders not exceeding 20 ft^3 (0.57 m^3) at NTP are permitted in gas cabinets or fume hoods.

--`,,```,,,,````-`-`,,`,,`,`,,`---

Copyright National Fire Protection Association
Provided by IHS under license with NFPA
No reproduction or networking permitted without license from IHS
Not for Resale

Table 34.1.3.2(f) Maximum Allowable Quantities (MAQ) of Hazardous Materials per Control Area in Health Care Occupancies

Material	Class	Solid	Liquid	Gas[a] (at NTP)
Flammable and combustible liquid[b,c]	I and II combined IIIA IIIB	NP NP NP	10 gal 60 gal 120 gal[d]	NP NP NP
Cryogenic liquid	Flammable Oxidizing	NP NP	10 gal 10 gal	NP NP
Explosives[e,f,g]	NP	NP	NP	NP
Flammable gas[c,e,f,g,h]	Gaseous Liquefied[i]	NP NP	NP 20 lb	NP NP
Consumer fireworks	1.4G	NP	NP	NP
Flammable solid	NP	5 lb	NP	NP
Oxidizers	4 3 2 1	NP 10 lb[j] 250 lb 4,000 lb[d]	NP 1 gal[j] 25 gal 400 gal[d]	NP NP NP NP
Oxidizing gas	Gaseous Liquefied	NP NP	NP 15 gal	per NFPA 99 NP
Organic peroxides	Unclassified detonatable I II III IV V	NP NP NP 1,500 lb 100,000 lb NL	NP NP NP 1,500 lb 100,000 lb NL	NP NP NP NP NP NP
Pyrophoric materials	NP	NP	NP	NP
Unstable reactives	4 3 2 1	NP NP 10 lb NL	NP NP 10 lb NL	NP NP NP[h] NP
Water-reactive	3 2 1	1 lb 10 lb NL	1 lb 10 lb NL	NA NA NA
Corrosives	NP	1,000 lb	100 gal	NP
Highly toxic	NP	3 lb	3 lb	NP[k]
Toxic	NP	125 lb	125 lb	NP[k]

For SI units, 1 lb = 0.454 kg; 1 gal = 3.785 L; 1 ft^3 = 0.0283 m^3.

NTP: Normal temperature and pressure [measured at 70°F (21°C) and 14.7 psi (30 kPa)]. NP: Not permitted. NL: Not limited. NA: Not applicable.

[a]Unlimited amounts of gas are permitted to be used for personal medical or emergency medical use.

[b]Storage in excess of 10 gal (38 L) of Class I and Class II liquids combined or 60 gal (227 L) of Class IIIA liquids is permitted where stored in safety cabinets with an aggregate quantity not to exceed 180 gal (681 L).

[c]Fuel in the tank of operating mobile equipment is permitted to exceed the specified quantity where the equipment is operated in accordance with the fire code.

[d]The permitted quantities are not limited in a building protected throughout by automatic sprinkler systems in accordance with NFPA 13.

[e]The use of explosive materials required by federal, state, or municipal agencies while engaged in normal or emergency performance of duties is not required to be limited. The storage of explosive materials is required to be in accordance with the requirements of NFPA 495.

[f]The storage and use of explosive materials in medicines and medicinal agents in the forms prescribed by the official United States Pharmacopoeia or the National Formulary are not required to be limited.

[g]The storage and use of propellant-actuated devices or propellant-actuated industrial tools manufactured, imported, or distributed for their intended purposes are required to be limited to 50 lb (23 kg) net explosive weight.

[h]Fuel or oxidizing gas used for maintenance, repair, and operation of equipment is not permitted to exceed 250 ft^3 (7.1 m^3).

[i]Storage in laboratories only; additional storage of 5 lb units permitted where minimum 20 ft (6.1 m) separation is provided.

[j]A maximum quantity of 200 lb (91 kg) of solid or 20 gal (76 L) of liquid Class 3 oxidizer is permitted where such materials are necessary for maintenance purposes, operation, or sanitation of equipment. Storage containers and the manner of storage are required to be approved.

[k]Gas cylinders not exceeding 20 ft^3 (0.57 m^3) at NTP are permitted in gas cabinets or fume hoods.

Copyright National Fire Protection Association
Provided by IHS under license with NFPA
No reproduction or networking permitted without license from IHS
Not for Resale

Table 34.1.3.2(g) Maximum Allowable Quantities (MAQ) of Hazardous Materials per Control Area in Detention and Correctional Occupancies[a]

Material	Class	Solid	Liquid	Gas[a] (at NTP)
Flammable and combustible liquid[b,c]	I and II combined IIIA IIIB	NP NP NP	10 gal 60 gal 120 gal	NP NP NP
Cryogenic liquid	Flammable Oxidizing	NP NP	10 gal 10 gal	NP NP
Explosives[d,e,f,g]	NP	NP	NP	NP
Flammable gas[c,h]	Gaseous Liquefied	NP NP	NP 20 lb	NP NP
Consumer fireworks	1.4G	NP	NP	NP
Flammable solid	NP	5 lb	NP	NP
Oxidizers	4 3 2 1	NP 10 lb[i] 250 lb 4,000 lb	NP 1 gal[i] 25 gal 400 gal	NP NP NP NP
Oxidizing gas[h]	Gaseous Liquefied	NA NA	NP 15 gal	NP NP
Organic peroxides	Unclassified detonatable I II III IV V	NP NP NP 1,500 lb 100,000 lb NL	NP NP NP 1,500 lb 100,000 lb NL	NP NP NP NP NP NP
Pyrophoric materials	NP	NP	NP	NP
Unstable reactives	4 3 2 1	NP NP 10 lb NL	NP NP 10 lb NL	NP NP NP[h] NP
Water-reactive	3 2 1	1 lb 10 lb NL	1 lb 10 lb NL	NP NP NP
Corrosives	NP	1,000 lb	100 gal	NP
Highly toxic	NP	3 lb	3 lb	NP[j]
Toxic	NP	125 lb	125 lb	NP[j]

For SI units, 1 lb = 0.454 kg; 1 gal = 3.785 L; 1 ft^3 = 0.0283 m^3.

NTP: Normal temperature and pressure [measured at 70°F (21°C) and 14.7 psi (30 kPa)]. NP: Not permitted. NL: Not limited.

[a]Unlimited amounts of gas are permitted to be used for personal medical or emergency medical use.

[b]Storage in excess of 10 gal (38 L) of Class I and Class II liquids combined or 60 gal (227 L) of Class IIIA liquids is permitted where stored in safety cabinets with an aggregate quantity not to exceed 180 gal (681 L).

[c]Fuel in the tank of operating mobile equipment is permitted to exceed the specified quantity where the equipment is operated in accordance with the fire code.

[d]The use of explosive materials required by federal, state, or municipal agencies while engaged in normal or emergency performance of duties is not required to be limited. The storage of explosive materials is required to be in accordance with the requirements of NFPA 495.

[e]The storage and use of explosive materials in medicines and medicinal agents in the forms prescribed by the official United States Pharmacopoeia or the National Formulary are not required to be limited.

[f]The storage and use of propellant-actuated devices or propellant-actuated industrial tools manufactured, imported, or distributed for their intended purposes are required to be limited to 50 lb (23 kg) net explosive weight.

[g]The storage and use of small arms ammunition, and components thereof, are permitted where in accordance with NFPA 495.

[h]Fuel or oxidizing gas used for maintenance, repair, and operation of equipment is not permitted to exceed 250 ft^3 (7.1 m^3).

[i]A maximum quantity of 200 lb (91 kg) of solid or 20 gal (76 L) of liquid Class 3 oxidizer is permitted where such materials are necessary for maintenance purposes, operation, or sanitation of equipment. Storage containers and the manner of storage are required to be approved.

[j]Gas cylinders not exceeding 20 ft^3 (0.57 m^3) at NTP are permitted in gas cabinets or fume hoods.

--`,,```,,,,````-`-`,,`,,`,`,,`---

Copyright National Fire Protection Association
Provided by IHS under license with NFPA
No reproduction or networking permitted without license from IHS

Not for Resale

Table 34.1.3.2(h) Maximum Allowable Quantities of Hazardous Materials per Control Area in Residential Occupancies Consisting of Lodging and Rooming Houses, Hotels, Dormitories, Apartments, and Residential Board and Care Facilities

Material	Class	Solid	Liquid	Gas[a] (at NTP)
Flammable and combustible liquid[b,c]	I and II combined IIIA IIIB	NP NP NP	10 gal 60 gal 120 gal	NP NP NP
Cryogenic liquid	Flammable Oxidizing	NP NP	10 gal 10 gal	NP NP
Explosives[d,e,f,g]	NP	NP	NP	NP
Flammable gas[c,h]	Gaseous Liquefied[i]	NP NP	NP 20 lb	NP NP
Consumer fireworks	1.4G	NP	NP	NP
Flammable solid	NP	5 lb	NP	NP
Oxidizers	4 3 2 1	NP 10 lb[j] 250 lb 4,000 lb	NP 1 gal[j] 25 gal 400 gal	NP NP NP NP
Oxidizing gas[h]	Gaseous Liquefied	NP NP	NP 15 gal	NP NP
Organic peroxides	Unclassified detonatable I II III IV V	NP NP NP 1,500 lb 100,000 lb NL	NP NP NP 1,500 lb 100,000 lb NL	NP NP NP NP NP NP
Pyrophoric materials	NP	1 lb	1 lb	NP
Unstable reactives	4 3 2 1	¼ lb 1 lb 10 lb NL	¼ lb 1 lb 10 lb NL	NP NP NP[h] NP
Water-reactive	3 2 1	1 lb 10 lb NL	1 lb 10 lb NL	NA NA NA
Corrosives	NP	1,000 lb	100 gal	NP
Highly toxic	NP	3 lb	3 lb	NP[k]
Toxic	NP	125 lb	125 lb	NP[k]

For SI units, 1 lb = 0.454 kg; 1 gal = 3.785 L; 1 ft^3 = 0.0283 m^3.

NTP: Normal temperature and pressure [measured at 70°F (21°C) and 14.7 psi (30 kPa)]. NP: Not permitted. NL: Not limited. NA: Not applicable.

[a]Unlimited amounts of gas are permitted to be used for personal medical or emergency medical use.

[b]Storage in excess of 10 gal (38 L) of Class I and Class II liquids combined or 60 gal (227 L) of Class IIIA liquids are permitted where stored in safety cabinets with an aggregate quantity not to exceed 180 gal (681 L).

[c]Fuel in the tank of operating mobile equipment is permitted to exceed the specified quantity where the equipment is operated in accordance with the fire code.

[d]The use of explosive materials required by federal, state, or municipal agencies while engaged in normal or emergency performance of duties is not required to be limited. The storage of explosive materials is required to be in accordance with the requirements of NFPA 495.

[e]The storage and use of explosive materials in medicines and medicinal agents in the forms prescribed by the official United States Pharmacopoeia or the National Formulary are not required to be limited.

[f]The storage and use of propellant-actuated devices or propellant-actuated industrial tools manufactured, imported, or distributed for their intended purposes are required to be limited to 50 lb (23 kg) net explosive weight.

[g]The storage and use of small arms ammunition, and components thereof, are permitted where in accordance with NFPA 495.

[h]Fuel or oxidizing gas used for maintenance, repair, and operation of equipment is not permitted to exceed 250 ft^3 (7.1 m^3).

[i]Storage containers are not permitted to exceed 2.7 lb water (1.2 kg) capacity.

[j]A maximum quantity of 200 lb (91 kg) of solid or 20 gal (76 L) of liquid Class 3 oxidizer is permitted where such materials are necessary for maintenance purposes, operation, or sanitation of equipment. Storage containers and the manner of storage are required to be approved.

[k]Gas cylinders not exceeding 20 ft^3 (0.57 m^3) at NTP are permitted in gas cabinets or fume hoods.

Copyright National Fire Protection Association
Provided by IHS under license with NFPA
No reproduction or networking permitted without license from IHS
Not for Resale

34.1.3.3 Mercantile, Storage, and Industrial Occupancies.

34.1.3.3.1 Maximum Allowable Quantity Increases for Mercantile, Storage, and Industrial Occupancies. The aggregate quantity of nonflammable solid and nonflammable or noncombustible liquid hazardous materials permitted within a single control area of a mercantile, storage, or industrial occupancy shall be permitted to exceed the maximum allowable quantities specified in Table 34.1.3.1, without complying with Protection Level 2, Protection Level 3, or Protection Level 4, provided that the quantities comply with Table 34.1.3.3.1(a) and Table 34.1.3.3.1(b) and that materials are displayed and stored in accordance with the special limitations on storage height, storage density, and other controls specified in NFPA 1.

Table 34.1.3.3.1(a) Maximum Allowable Quantity per Control Area Increases for Selected Hazard Categories in Mercantile, Storage, and Industrial Occupancies

	Maximum Allowable Quantity[a,b]			
	Solids		Liquids	
Hazard Category	lb	kg	gal	L
Physical Hazard Materials: Nonflammable and Noncombustible Solids and Liquids				
Oxidizers				
Class 3	1,150	522	115	435
Class 2	2,250	1,022	225	852
Class 1	18,000[c]	8,172	1,800[c]	6,813

For SI units, 1 lb = 0.454 kg; 1 gal = 3.785 L.

Note: Maximum quantities for hazard categories not shown are required to be in accordance with Table 34.1.3.1.

[a]Maximum quantities are permitted to be increased 100 percent in buildings that are sprinklered in accordance with NFPA 13. Where footnote b also applies, the increase for both footnotes is permitted to be applied.

[b]Maximum quantities are permitted to be increased 100 percent where stored in approved storage cabinets, gas cabinets, or exhausted enclosures in accordance with NFPA 1. Where footnote a also applies, the increase for both footnotes is permitted to be applied.

[c]Quantities are not limited in buildings protected by an automatic sprinkler system complying with NFPA 13.

34.1.3.3.2 Maximum Allowable Quantity Increases for Sale of Alcoholic Beverages, Medicines, Foodstuffs, and Cosmetics.

34.1.3.3.2.1 Quantities of alcoholic beverages shall not be limited in mercantile occupancies, provided that the liquids are packaged in individual containers not exceeding 1.3 gal (4.9 L).

34.1.3.3.2.2 Quantities of medicines, foodstuffs, and cosmetics containing not more than 50 percent by volume of water-miscible liquids, and with the remainder of the solutions not being flammable, shall not be limited, provided that such materials are packaged in individual containers not exceeding 1 gal (3.78 L).

Table 34.1.3.3.1(b) Maximum Allowable Quantity per Control Area Increases for Selected Hazard Categories in Mercantile and Storage Occupancies

	Maximum Allowable Quantity[a,b,c]			
	Solids		Liquids	
Hazard Category	lb	kg	gal	L
Physical Hazard Materials: Nonflammable and Noncombustible Solids and Liquids				
Unstable (reactive)				
Class 3	550	250	55	208
Class 2	1,150	522	115	435
Water-reactive				
Class 3	550	250	55	208
Class 2	1,150	522	115	435
Health Hazard Materials: Nonflammable and Noncombustible Solids and Liquids				
Corrosive	10,000	4540	1,000	3785
Highly toxic	20	9	2	8
Toxic	1,000	454	100	379

For SI units, 1 lb = 0.454 kg; 1 gal = 3.785 L.

[a]Maximum quantities for hazard categories not shown are required to be in accordance with Table 34.1.3.1.

[b]Maximum quantities are permitted to be increased 100 percent in buildings that are sprinklered in accordance with NFPA 13. Where footnote b also applies, the increase for both footnotes can be applied.

[c]Maximum quantities are permitted to be increased 100 percent where stored in approved storage cabinets, gas cabinets, or exhausted enclosures in accordance with NFPA 1. Where footnote a also applies, the increase for both footnotes is permitted to be applied.

34.1.3.3.3 Maximum Allowable Quantities of Flammable and Combustible Liquids in Industrial Occupancies. The maximum allowable quantities of flammable and combustible liquids in storage and closed use combined in industrial occupancies shall be as follows:

(1) 25 gal (95 L) of Class IA liquids in containers [**30:** 7.5.4.1(1)]
(2) 120 gal (454 L) of Class IB, Class IC, Class II, or Class III liquids in containers [**30:** 7.5.4.1(2)]
(3) 1586 gal (6000 L) of any combination of the following: [**30:**7.5.4.1(3)]

Copyright National Fire Protection Association
Provided by IHS under license with NFPA
No reproduction or networking permitted without license from IHS
Not for Resale

(a) Class IB, Class IC, Class II, or Class IIIA liquids in metal portable tanks or metal intermediate bulk containers, each not exceeding 793 gal (3000 L)
(b) Class II or Class IIIA liquids in nonmetallic intermediate bulk containers, each not exceeding 793 gal (3000 L)

(4) 20 portable tanks or intermediate bulk containers each not exceeding 793 gal (3000 L) of Class IIIB liquids [**30:** 7.5.4.1(4)]

34.1.4 Performance Alternative. In lieu of complying with Chapter 34 in its entirety, occupancies containing high hazard Level 1 to high hazard Level 5 contents shall be permitted to comply with 34.1.4.1 and 34.1.4.2.

34.1.4.1 Goal. The goal of performance-based designs for facilities containing high hazard contents shall be to protect people and property from the consequences of unauthorized discharges, fires, or explosions involving hazardous materials.

34.1.4.1.1 The performance-based designs specified in 34.1.4.1 shall minimize the risk of events described in 34.1.4.1 and shall minimize the consequences of such events if they occur.

34.1.4.1.2 Performance-based designs shall also comply with Chapters 4 and 5.

34.1.4.2 Objectives.

34.1.4.2.1 To satisfy the goal established in 34.1.4.1, performance-based designs for facilities containing high hazard contents shall identify the properties of hazardous materials to be stored, used, or handled and shall provide adequate and reliable safeguards to accomplish the following objectives, considering both normal operations and possible abnormal conditions:

(1) Minimize the potential occurrence of unwanted releases, fires, or other emergency incidents resulting from the storage, use, or handling of hazardous materials
(2) Minimize the potential failure of buildings, equipment, or processes involving hazardous materials by ensuring that such buildings, equipment, or processes are reliably designed and are suitable for the hazards present
(3) Minimize the potential exposure of people or property to unsafe conditions or events involving an unintended reaction or release of hazardous materials
(4) Minimize the potential for an unintentional reaction that results in a fire, explosion, or other dangerous condition
(5) Provide a means to contain, treat, neutralize, or otherwise handle plausible releases of hazardous materials to minimize the potential for adverse impacts to persons or property outside of the immediate area of a release
(6) Provide appropriate safeguards to minimize the risk of, and limit the damage and injury that might result from, an explosion involving hazardous materials that present explosion hazards
(7) Detect hazardous levels of gases or vapors that are dangerous to health, and alert appropriate persons or mitigate the hazard when the physiological warning properties for such gases or vapors are inadequate to warn of danger prior to personal injury
(8) Maintain power to provide for continued operation of safeguards and important systems that are relied on to prevent or control an emergency condition involving hazardous materials
(9) Maintain ventilation where ventilation is relied on to minimize the risk of emergency conditions involving hazardous materials
(10) Minimize the potential for exposing combustible hazardous materials to unintended sources of ignition, and for exposing any hazardous material to fire or physical damage that can lead to endangerment of people or property

34.1.4.2.2 As part of the design process, a process hazard analysis and off-site consequence analysis shall be conducted where necessary to reasonably ensure that people and property are satisfactorily protected from dangerous conditions involving hazardous materials.

34.1.4.2.3 The results of the analyses specified in 34.1.4.2.2 shall be considered when determining active and passive mitigation measures used in accomplishing the objectives set forth in 34.1.4.2.1.

34.1.4.2.4 In addition to the requirement of 34.1.4.2.3, written procedures for pre-start-up safety reviews, normal and emergency operations, management of change, emergency response, and accident investigation and documentation shall be developed prior to beginning operations at a facility designed in accordance with 34.1.4.

34.1.4.2.5 Procedures, as described in 34.1.4.2.4, shall be developed with the participation of affected employees.

34.2 Requirements for All Occupancies Containing High Hazard Contents.

34.2.1 Applicability. Buildings, and portions thereof, containing hazardous materials regulated by this *Code* shall comply with Section 34.2.

34.2.2 Fire Prevention Code. Buildings, and portions thereof, where hazardous materials are stored, used, or handled shall also comply with NFPA 1.

34.2.3 Special Information for Permit Application.

34.2.3.1 Permit applications for buildings, and portions thereof, containing high hazard contents shall be accompanied by the following:

(1) Plan showing the location of storage and use areas
(2) Information identifying the maximum quantity of each class of hazardous material stored and used in each area

34.2.3.2 Where required by the authority having jurisdiction, the permit applicant shall provide, without charge to the jurisdiction, a technical opinion and report prepared by a qualified engineer, specialist, laboratory, or fire safety specialty organization that analyzes the fire safety and life safety properties of the design, operation, or use of the building or facility and demonstrates compliance with this *Code*.

34.2.4 Control Areas. Control areas shall be those spaces within a building where quantities of hazardous contents not exceeding the maximum quantities allowed by this *Code* are stored, dispensed, used, or handled.

34.2.4.1 Construction Requirements for Control Areas.

34.2.4.1.1 Control areas shall be separated from each other by fire barriers in accordance with Table 34.2.4.1.1.

34.2.4.1.2 Where only one control area is present in a building, no special construction provisions shall be required.

Copyright National Fire Protection Association
Provided by IHS under license with NFPA
No reproduction or networking permitted without license from IHS
Not for Resale

Table 34.2.4.1.1 Design and Number of Control Areas

Floor Level	Maximum Allowable Quantity per Control Area (%)*	Number of Control Areas per Floor	Fire Resistance Rating for Fire Barriers† (hr)
Above grade			
>9	5.0	1	2
7–9	5.0	2	2
4–6	12.5	2	2
3	50.0	2	1
2	75.0	3	1
1	100.0	4	1
Below grade			
1	75	3	1
2	50	2	1
Lower than 2	NA	NA	NA

NA: Not applicable.
*Percentages represent the maximum allowable quantities per control area shown in Table 34.1.3.1, with all of the increases permitted in the footnotes of that table.
†Fire barriers are required to include floors and walls, as necessary, to provide a complete separation from other control areas.

34.2.4.2 Number of Control Areas. The maximum number of control areas within a building shall be in accordance with Table 34.2.4.1.1.

34.2.5 Weather Protection. Where weather protection is provided for sheltering outside hazardous material storage or use areas, such storage or use areas shall be considered outside storage or use areas, provided that all of the following conditions are met:

(1) Supports and walls shall not obstruct more than one side or more than 25 percent of the perimeter of the storage or use area.
(2) The distance from the structure and the structural supports to buildings, lot lines, public ways, or means of egress to a public way shall not be less than the distance required by NFPA 1 for an outside hazardous material storage or use area without weather protection.
(3) Weather-protection structures constructed in accordance with 34.2.5 shall not contain explosive or detonable materials.

34.3 Requirements for Occupancies Exceeding the Maximum Allowable Quantities per Control Area for High Hazard Contents.

34.3.1 Protection Levels. Buildings, and portions thereof, where high hazard contents are stored, used, or handled shall comply with the protection levels as set forth in Section 34.3.

34.3.1.1 Protection Level 1. Buildings containing quantities of hazardous materials exceeding the maximum allowable quantities of high hazard Level 1 contents permitted in control areas shall comply with applicable regulations for Protection Level 1, as set forth in 34.3.3.

34.3.1.2 Protection Level 2. Buildings, and portions thereof, containing quantities of hazardous materials exceeding the maximum allowable quantities of high hazard Level 2 contents permitted in control areas shall comply with applicable regulations for Protection Level 2, as set forth in 34.3.4.

34.3.1.3 Protection Level 3. Buildings, and portions thereof, containing quantities of hazardous materials exceeding the maximum allowable quantities of high hazard Level 3 contents permitted in control areas shall comply with applicable regulations for Protection Level 3, as set forth in 34.3.5.

34.3.1.4 Protection Level 4. Buildings, and portions thereof, containing quantities of hazardous materials exceeding the maximum allowable quantities of high hazard Level 4 contents permitted in control areas shall comply with applicable regulations for Protection Level 4, as set forth in 34.3.6.

34.3.1.5 Protection Level 5. Buildings, and portions thereof, used for fabrication of semiconductors or semiconductor research and development and containing quantities of hazardous materials exceeding the maximum allowable quantities of high hazard Level 5 contents permitted in control areas shall comply with applicable regulations for Protection Level 5, as set forth in 34.3.7.

34.3.2 General Requirements. The requirements set forth in 34.3.2 shall apply to buildings, or portions thereof, that are required to comply with Protection Level 1 through Protection Level 5 where required by 34.3.1.1 through 34.3.1.5.

34.3.2.1 Fire Protection Systems. Buildings, or portions thereof, required to comply with Protection Level 1 through Protection Level 5 shall be protected by an approved automatic fire sprinkler system complying with Section 55.3.

34.3.2.1.1 Electronic supervision of supervisory signals shall be provided in accordance with 55.3.2.1.

34.3.2.1.2 Waterflow alarms shall be monitored in accordance with 55.3.2.2.

34.3.2.1.3 Rooms or areas that are of noncombustible construction with wholly noncombustible contents shall not be required to comply with 34.3.2.1.

34.3.2.1.4 Portable magazines not exceeding 120 ft^2 (11.2 m^2) constructed in accordance with NFPA 495 shall not be required to comply with 34.3.2.1.

34.3.2.2 Building Height Exception. The height of a single-story building, or portion thereof, containing only tanks or industrial process equipment shall not be limited based on the type of construction.

34.3.2.3 Separation of Occupancies Having High Hazards. The separation of areas containing high hazard contents from each other and from other use areas shall be as required by Table 34.3.2.3 and shall not be permitted to be reduced with the installation of fire protection systems as required by 34.3.2.1.

34.3.2.4 Egress. Egress from areas required to comply with Protection Level 1, Protection Level 2, Protection Level 3, or Protection Level 4 shall comply with 34.3.2.4, and egress from areas required to comply with Protection Level 5 shall comply with 34.3.7.

34.3.2.4.1 Travel Distance Limit. Travel distance to an exit from areas required to comply with Protection Level 1 through Protection Level 5 shall not exceed the distance given in Table 34.3.2.4.1, measured as required in 11.6.2.

34.3.2.4.2 Capacity of Means of Egress. Egress capacity for high hazard contents areas shall be based on 0.7 in. (18 mm)

Copyright National Fire Protection Association
Provided by IHS under license with NFPA
No reproduction or networking permitted without license from IHS
Not for Resale

Table 34.3.2.3 Required Separation of Occupancies Containing High Hazard Contents (hr)

Occupancy	Protection Level 1	Protection Level 2	Protection Level 3*	Protection Level 4	Protection Level 5
Apartment buildings	NP	4	3	4	4
Assembly ≤ 300	NP	4	3	2	4
Assembly > 300 and ≤ 1000	NP	4	3	2	4
Assembly > 1000	NP	4	3	2	4
Board and care, small	NP	4	3	4	4
Board and care, large	NP	4	3	4	4
Business	NP	2	1	1	1
Day-care > 12	NP	4	3	4	4
Day-care homes	NP	4	3	4	4
Detention and correctional	NP	4	3	4	4
Dwellings, one- and two-family	NP	4	3	4	4
Educational	NP	4	3	2	3
Health care, ambulatory	NP	4	4	4	4
Health care, nonambulatory	NP	4	4	4	4
Hotels and dormitories	NP	4	3	4	4
Industrial, general purpose	NP	2	1	1	1
Industrial, special purpose	NP	2	1	1	1
Lodging and rooming houses	NP	4	3	4	4
Mercantile, Class A	NP	2	1	1	1
Mercantile, Class B	NP	2	1	1	1
Mercantile, Class C	NP	2	1	1	1
Mercantile, covered mall	NP	2	1	1	1
Mercantile, bulk retail	NP	2	1	1	1
Protection Level 1	—	NP	NP	NP	NP
Protection Level 2	NP	—	1	2	2
Protection Level 3	NP	1	—	1	1
Protection Level 4	NP	2	1	—	1
Protection Level 5	NP	2	1	1	—
Storage, low and ordinary hazard	NP	2	1	1	1

NP: Not permitted.

*Rooms in excess of 150 ft^2 (14 m^2), storing flammable liquids, combustible liquids, or Class III oxidizers, are required to be provided with not less than a 2-hour separation.

Table 34.3.2.4.1 Travel Distance Limits

Hazard Level	Distance	
	ft	m
1	75	23
2	100	30
3	150	46
4	175	53
5	200	61

per person for stairs or 0.4 in. (10 mm) per person for level components and ramps in accordance with 11.3.3.1.

34.3.2.4.3 Number of Means of Egress. Not less than two means of egress shall be provided from each building, or portion thereof, required to comply with Section 34.3, unless rooms or spaces do not exceed 200 ft^2 (18.6 m^2), have an occupant load not exceeding three persons, and have a travel distance to the room door not exceeding 25 ft (7.6 m).

34.3.2.4.4 Dead Ends. Means of egress, for other than rooms or spaces that do not exceed 200 ft^2 (18.6 m^2), have an occupant load not exceeding three persons, and have a travel distance to the room door not exceeding 25 ft (7.6 m), shall be arranged so that there are no dead ends in corridors.

34.3.2.4.5 Doors. Doors serving high hazard contents areas with occupant loads in excess of five shall be permitted to be provided with a latch or lock only if the latch or lock is panic hardware or fire exit hardware complying with 11.2.1.7.

34.3.2.5 Ventilation.

34.3.2.5.1 Buildings, or portions thereof, in which explosive, flammable, combustible, corrosive, or highly toxic dusts, mists, fumes, vapors, or gases are, or might be, emitted shall be provided with mechanical exhaust ventilation or natural ventilation where natural ventilation can be shown to be acceptable for the materials as stored.

34.3.2.5.1.1 Flammable and combustible liquids stored in closed containers in compliance with NFPA 30 shall not be required to comply with 34.3.2.5.1.

34.3.2.5.1.2 Solids and liquids, other than combustible or flammable liquids, stored in closed containers shall not be required to comply with 34.3.2.5.1.

34.3.2.5.2 Mechanical exhaust systems shall comply with the *Uniform Mechanical Code,* as referenced in Chapter 50.

Copyright National Fire Protection Association
Provided by IHS under license with NFPA
No reproduction or networking permitted without license from IHS
Not for Resale

34.3.2.5.3 Mechanical ventilation shall be at a rate of not less than 1 $ft^3/min/ft^2$ (5.1 $L/s/m^2$) of floor area over areas required to comply with Protection Level 1 through Protection Level 5.

34.3.2.5.4 Areas containing Class I liquids or Class II liquids at temperatures above their flash points, or Class IIIA liquids at temperatures above their flash points, shall be ventilated at a rate sufficient to maintain the concentration of vapors within the area at or below 25 percent of the lower explosive limit.

34.3.2.5.5 Ventilation requirements shall be determined by calculations based on anticipated fugitive emissions or by sampling of the actual vapor concentration levels under normal operating conditions.

34.3.2.5.6 Make-up air shall be provided, and provision shall be made for locating make-up air openings to avoid short-circuiting the ventilation.

34.3.2.5.7 Ducts conveying explosives or flammable vapors, fumes, or dusts shall extend directly to the exterior of the building without entering other spaces.

34.3.2.5.7.1 Exhaust ducts shall not extend into or through ducts and plenums.

34.3.2.5.7.2 Ducts conveying vapor or fumes having flammable constituents less than 25 percent of their lower flammability limit shall be permitted to pass through other spaces.

34.3.2.5.8 Emissions generated at work stations shall be confined to the area in which they are generated as specified in NFPA 1, as referenced in Chapter 50.

34.3.2.5.9 The location of supply and exhaust openings shall be in accordance with the *Uniform Mechanical Code*, as referenced in Chapter 50.

34.3.2.5.10 Exhaust air contaminated by highly toxic material shall be treated where required by NFPA 1.

34.3.2.5.11 Systems shall operate continuously unless alternate designs are approved.

34.3.2.5.12 A manual shutoff control for ventilation equipment required by 34.3.2.5 shall be provided outside the room adjacent to the principal access door to the room.

34.3.2.5.13 The shutoff control described in 34.3.2.5.12 shall be of the break-glass type and shall be labeled as follows:

VENTILATION SYSTEM EMERGENCY SHUTOFF

34.3.2.5.14 Exhaust ventilation shall be arranged to consider the density of the potential fumes or vapors released.

34.3.2.5.14.1 For fumes or vapors that are heavier than air, exhaust shall be taken from a point within 12 in. (305 mm) of the floor.

34.3.2.5.14.2 The location of both the exhaust and inlet air openings shall be arranged to provide air movement across all portions of the floor or room to prevent the accumulation of vapors.

34.3.2.5.14.3 Exhaust ventilation shall not be recirculated within the room or building if the materials stored are capable of emitting hazardous vapors.

34.3.2.5.14.4 Recirculation shall be permitted where it is monitored continuously using a fail-safe system that is designed to automatically sound an alarm, stop recirculation, and provide full exhaust to the outside in the event that vapor–air mixtures in concentrations over one-fourth of the lower flammable limit are detected.

34.3.2.6* Explosion Control. Buildings, or portions thereof, required to comply with Protection Level 1 through Protection Level 3 and containing materials shown in Table 34.3.2.6 shall be provided with a means of explosion control.

Table 34.3.2.6 Explosion Control Requirements

Hazard Category	Class	Protection Method
Combustible dust presenting an explosion hazard	NA	Explosion control[a]
Explosives	Detonating	Barricade[b]
	Deflagrating	Explosion control[a]
Flammable gas or cryogen	NA	Explosion control[a]
Flammable liquid[c]	Class IA, storage >1 gal	Explosion control[a]
	Class IA, use	Explosion control[a]
	Class IB, use-open[d]	Explosion control[a]
Organic peroxides	Unclassified	Barricade[b]
	Class I	Barricade[b]
Oxidizer liquids and solids	Class 4	Barricade[b]
Pyrophoric gas[e]	NA	Barricade[b] Explosion control[a]
Unstable (reactive)	Class 4	Barricade[b]
	Class 3 detonating	Barricade[b]
	Class 3 deflagrating	Explosion control[a]
Water-reactive liquids and solids	Class 3	Explosion control[a]
	Class 2 deflagrating	Explosion control[a]

NA: Not applicable.

[a]Explosion control is required to be a deflagration prevention method, such as combustible concentration reduction, or oxidant concentration reduction, or a deflagration control method complying with NFPA 69, *Standard on Explosion Prevention Systems*, or an approved, engineered deflagration-venting method.

[b]Barricades are required to comply with NFPA 495.

[c]Deflagration venting is not required for rooms that are less than or equal to 500 ft^2 (46.5 m^2) in floor area and do not have any exterior walls as set forth in 34.3.4.2.2.

[d]A protection method is required where an explosive environment can occur as a result of the dispensing or use process.

[e]Where gas–air mixtures are capable of detonation, barricade construction is required to be provided.

Copyright National Fire Protection Association
Provided by IHS under license with NFPA
No reproduction or networking permitted without license from IHS
Not for Resale

34.3.2.7 Standby and Emergency Power.

34.3.2.7.1 Where mechanical ventilation, treatment systems, temperature control, alarm, detection, or other electrically operated safety systems are required by this *Code* or NFPA 1, such systems shall be provided with standby power or emergency power as required by 34.3.2.7.

34.3.2.7.2 Standby power for mechanical ventilation, exhaust treatment, and temperature control systems shall not be required where such systems are engineered and approved as fail-safe.

34.3.2.7.3 The secondary source of power shall be an approved means of legally required standby power in accordance with NFPA 70, *National Electrical Code*, except for areas containing highly toxic or toxic gases, where a legally required emergency power system in accordance with Chapter 52 and NFPA 55, *Standard for the Storage, Use, and Handling of Compressed Gases and Cryogenic Fluids in Portable and Stationary Containers, Cylinders, and Tanks*, shall be provided to operate safety systems required by this *Code* or NFPA 1.

34.3.2.8 Spill Control and Secondary Containment for Hazardous Materials Liquids and Solids.

34.3.2.8.1 General. Buildings, or portions thereof, required to comply with Protection Level 1 through Protection Level 5 shall be provided with spill control and secondary containment in accordance with 34.3.2.8.2 and 34.3.2.8.3.

34.3.2.8.2 Spill Control.

34.3.2.8.2.1 Buildings, or portions thereof, used for any of the following shall be provided with spill control to prevent the flow of liquids to adjoining areas:

(1) Storage or closed system use of hazardous materials liquids in individual vessels having a capacity of more than 55 gal (208.2 L)
(2) Dispensing of hazardous materials liquids into vessels exceeding a 1.1 gal (4 L) capacity
(3) Open use of hazardous materials in vessels or systems exceeding a 5.3 gal (20 L) capacity

34.3.2.8.2.2 Where spill control is required, floors in indoor locations and similar surfaces in outdoor locations shall be constructed to contain a spill from the largest single vessel by one of the following methods:

(1) Liquid-tight sloped or recessed floors in indoor locations or similar areas in outdoor locations
(2) Liquid-tight floors in indoor locations or similar areas in outdoor locations provided with liquid-tight raised or recessed sills or dikes
(3) Sumps and collection systems

34.3.2.8.2.3 Except for surfacing, the floors, sills, dikes, sumps, and collection systems shall be constructed of noncombustible material, and the liquid-tight seal shall be compatible with the material stored.

34.3.2.8.2.4 Where liquid-tight sills or dikes are provided, they shall not be required at perimeter openings that are provided with an open-grate trench across the opening that connects to an approved collection system.

34.3.2.8.3 Secondary Containment.

34.3.2.8.3.1 Buildings, or portions thereof, used for any of the following shall be provided with secondary containment:

(1) Storage of liquids where the capacity of an individual vessel exceeds 55 gal (208.2 L) or the aggregate capacity of multiple vessels exceeds 1000 gal (3785 L)
(2) Storage of solids where the capacity of an individual vessel exceeds 550 lb (248.8 kg) or the aggregate capacity of multiple vessels exceeds 10,000 lb (4524.8 kg)
(3) Open-use liquids where the capacity of an individual vessel or system exceeds 1.1 gal (4 L)
(4) Open-use liquids where the capacity of multiple vessels or systems exceeds 5.3 gal (20 L)

34.3.2.8.3.2 Buildings, or portions thereof, containing only hazardous materials in listed secondary containment tanks or systems shall not be required to comply with 34.3.2.8.3.1.

34.3.2.8.3.3 Buildings, or portions thereof, containing only flammable solids, explosive solids, or corrosive solids shall not be required to comply with 34.3.2.8.3.1.

34.3.2.8.3.4 Secondary containment shall be achieved by means of drainage control where required by NFPA 30.

34.3.2.8.3.5 The building, room, or area shall contain or drain the hazardous materials and fire protection water through the use of one of the following methods:

(1) Liquid-tight sloped or recessed floors in indoor locations or similar areas in outdoor locations
(2) Liquid-tight floors in indoor locations or similar areas in outdoor locations provided with liquid-tight raised or recessed sills or dikes
(3) Sumps and collection systems
(4) Drainage systems leading to an approved location

34.3.2.8.3.6 Where incompatible materials are present in open containers or systems, such materials shall be separated from each other in the secondary containment system.

34.3.2.8.3.7 Secondary containment for indoor storage areas shall be designed to contain a spill from the largest vessel plus the design flow volume of fire protection water calculated to discharge from the fire-extinguishing system over the minimum required system design area, or area of the room or area in which the storage is located, whichever is smaller, for a period of 20 minutes.

34.3.2.8.3.8 A monitoring method shall be provided to detect hazardous materials in the secondary containment system.

34.3.2.8.3.9 The monitoring method shall be permitted to be visual inspection of the primary or secondary containment, or other approved means.

34.3.2.8.3.10 Where secondary containment is subject to the intrusion of water, a monitoring method for detecting water shall be provided.

34.3.2.8.3.11 Where monitoring devices are provided, they shall be connected to distinct visual or audible alarms.

34.3.2.8.3.12 Where remote containment systems are provided, drainage systems shall be in accordance with the *Uniform Plumbing Code,* as referenced in Chapter 53, and the following provisions also shall be met:

(1) The slope of floors in indoor locations to drains or similar areas in outdoor locations shall be not less than 1 percent.
(2) Drains from indoor storage areas shall be sized to carry the volume of the fire protection water, as determined by the design density discharged from the automatic fire-extinguishing system over the minimum required system

Copyright National Fire Protection Association
Provided by IHS under license with NFPA
No reproduction or networking permitted without license from IHS
Not for Resale

design area, or area of the room or area in which the storage is located, whichever is smaller.

(3) Materials of construction for drainage systems shall be compatible with the materials stored.

(4) Separate drainage systems shall be provided to avoid mixing incompatible materials where such materials are present in an open-use condition.

(5) Drains shall terminate in an approved location away from buildings, valves, means of egress, fire access roadways, adjoining property, and storm drains.

34.3.2.9 Floors in Storage Rooms. Floors in storage areas for organic peroxides, oxidizers, pyrophoric materials, unstable (reactive) materials, water-reactive solids and liquids, corrosive materials, and toxic and highly toxic materials shall be of liquid-tight, noncombustible construction.

34.3.2.10 Unprotected Vertical Openings.

34.3.2.10.1 In industrial occupancies required to comply with 34.3.3, where unprotected vertical openings exist and are necessary to manufacturing operations, such openings shall be permitted beyond the specified limits in 29.3.1(1).

34.3.2.10.2 The unprotected vertical openings described in 34.3.2.10.1 shall be permitted only where every floor level has direct access to one or more enclosed stairs or other exits protected against obstruction by any fire or smoke in the open areas connected by the unprotected vertical openings.

34.3.3 Protection Level 1.

34.3.3.1 General. Buildings, or portions thereof, required to comply with Protection Level 1 shall comply with 34.3.2, 34.3.3.2, and 34.3.3.3.

34.3.3.2 Detached Building Required.

34.3.3.2.1 Buildings required to comply with Protection Level 1 shall be used for no other purpose, shall not exceed one story in height, and shall be without basements, crawl spaces, or other under-floor spaces.

34.3.3.2.2 Roofs of buildings described in 34.3.3.2.1 shall be of lightweight construction with suitable thermal insulation to prevent sensitive material from reaching its decomposition temperature.

34.3.3.2.3 Buildings required to comply with both Protection Level 1 and Protection Level 4 shall comply with the most restrictive requirements for both protection levels.

34.3.3.3 Minimum Distance to Property Lines or Horizontal Separation. Buildings required to comply with Protection Level 1 shall be set back from property lines, or be provided with a horizontal separation in accordance with 7.3.4.2, by a distance of not less than 75 ft (23 m) and of not less than that required by Table 34.3.3.3.

Table 34.3.3.3 The American Table of Distances for Storage of Explosives

Quantity of Explosive Materials[1,2,3,4]		Distances in Feet							
		Inhabited Buildings[9]		Public Highways Traffic Volume of 3,000 Vehicles/Day or Less[11]		Passenger Railways — Public Highways with Traffic Volume of More Than 3,000 Vehicles/Day[10,11]		Separation of Magazines[12]	
Pounds Over	Pounds not Over	Barricaded[6,7,8]	Unbarricaded	Barricaded[6,7,8]	Unbarricaded	Barricaded[6,7,8]	Unbarricaded	Barricaded[6,7,8]	Unbarricaded
0	5	70	140	30	60	51	102	6	12
5	10	90	180	35	70	64	128	8	16
10	20	110	220	45	90	81	162	10	20
20	30	125	250	50	100	93	186	11	22
30	40	140	280	55	110	103	206	12	24
40	50	150	300	60	120	110	220	14	28
50	75	170	340	70	140	127	254	15	30
75	100	190	380	75	150	139	278	16	32
100	125	200	400	80	160	150	300	18	36
125	150	215	430	85	170	159	318	19	38
150	200	235	470	95	190	175	350	21	42
200	250	255	510	105	210	189	378	23	46
250	300	270	540	110	220	201	402	24	48
300	400	295	590	120	240	221	442	27	54
400	500	320	640	130	260	238	476	29	58
500	600	340	680	135	270	253	506	31	62
600	700	355	710	145	290	266	532	32	64
700	800	375	750	150	300	278	556	33	66
800	900	390	780	155	310	289	578	35	70
900	1,000	400	800	160	320	300	600	36	72
1,000	1,200	425	850	165	330	318	636	39	78
1,200	1,400	450	900	170	340	336	672	41	82

Copyright National Fire Protection Association
Provided by IHS under license with NFPA
No reproduction or networking permitted without license from IHS
Not for Resale

Table 34.3.3.3 *Continued*

Quantity of Explosive Materials[1,2,3,4]		Distances in Feet							
		Inhabited Buildings[9]		Public Highways Traffic Volume of 3,000 Vehicles/Day or Less[11]		Passenger Railways — Public Highways with Traffic Volume of More Than 3,000 Vehicles/Day[10,11]		Separation of Magazines[12]	
Pounds Over	Pounds not Over	Barricaded[6,7,8]	Unbarricaded	Barricaded[6,7,8]	Unbarricaded	Barricaded[6,7,8]	Unbarricaded	Barricaded[6,7,8]	Unbarricaded
1,400	1,600	470	940	175	350	351	702	43	86
1,600	1,800	490	980	180	360	366	732	44	88
1,800	2,000	505	1,010	185	370	378	756	45	90
2,000	2,500	545	1,090	190	380	408	816	49	98
2,500	3,000	580	1,160	195	390	432	864	52	104
3,000	4,000	635	1,270	210	420	474	948	58	116
4,000	5,000	685	1,370	225	450	513	1,026	61	122
5,000	6,000	730	1,460	235	470	546	1,092	65	130
6,000	7,000	770	1,540	245	490	573	1,146	68	136
7,000	8,000	800	1,600	250	500	600	1,200	72	144
8,000	9,000	835	1,670	255	510	624	1,248	75	150
9,000	10,000	865	1,730	260	520	645	1,290	78	156
10,000	12,000	875	1,750	270	540	687	1,374	82	164
12,000	14,000	885	1,770	275	550	723	1,446	87	174
14,000	16,000	900	1,800	280	560	756	1,512	90	180
16,000	18,000	940	1,880	285	570	786	1,572	94	188
18,000	20,000	975	1,950	290	580	813	1,626	98	196
20,000	25,000	1,055	2,000	315	630	876	1,752	105	210
25,000	30,000	1,130	2,000	340	680	933	1,866	112	224
30,000	35,000	1,205	2,000	360	720	981	1,962	119	238
35,000	40,000	1,275	2,000	380	760	1,026	2,000	124	248
40,000	45,000	1,340	2,000	400	800	1,068	2,000	129	258
45,000	50,000	1,400	2,000	420	840	1,104	2,000	135	270
50,000	55,000	1,460	2,000	440	880	1,140	2,000	140	280
55,000	60,000	1,515	2,000	455	910	1,173	2,000	145	290
60,000	65,000	1,565	2,000	470	940	1,206	2,000	150	300
65,000	70,000	1,610	2,000	485	970	1,236	2,000	155	310
70,000	75,000	1,655	2,000	500	1,000	1,263	2,000	160	320
75,000	80,000	1,695	2,000	510	1,020	1,293	2,000	165	330
80,000	85,000	1,730	2,000	520	1,040	1,317	2,000	170	340
85,000	90,000	1,760	2,000	530	1,060	1,344	2,000	175	350
90,000	95,000	1,790	2,000	540	1,080	1,368	2,000	180	360
95,000	100,000	1,815	2,000	545	1,090	1,392	2,000	185	370
100,000	110,000	1,835	2,000	550	1,100	1,437	2,000	195	390
110,000	120,000	1,855	2,000	555	1,110	1,479	2,000	205	410
120,000	130,000	1,875	2,000	560	1,120	1,521	2,000	215	430
130,000	140,000	1,890	2,000	565	1,130	1,557	2,000	225	450
140,000	150,000	1,900	2,000	570	1,140	1,593	2,000	235	470
150,000	160,000	1,935	2,000	580	1,160	1,629	2,000	245	490
160,000	170,000	1,965	2,000	590	1,180	1,662	2,000	255	510
170,000	180,000	1,990	2,000	600	1,200	1,695	2,000	265	530
180,000	190,000	2,010	2,010	605	1,210	1,725	2,000	275	550
190,000	200,000	2,030	2,030	610	1,220	1,755	2,000	285	570
200,000	210,000	2,055	2,055	620	1,240	1,782	2,000	295	590
210,000	230,000	2,100	2,100	635	1,270	1,836	2,000	315	630
230,000	250,000	2,155	2,155	650	1,300	1,890	2,000	335	670

(continues)

Copyright National Fire Protection Association
Provided by IHS under license with NFPA
No reproduction or networking permitted without license from IHS
Not for Resale

Table 34.3.3.3 *Continued*

Quantity of Explosive Materials[1,2,3,4]		Distances in Feet							
		Inhabited Buildings[9]		Public Highways Traffic Volume of 3,000 Vehicles/Day or Less[11]		Passenger Railways — Public Highways with Traffic Volume of More Than 3,000 Vehicles/Day[10,11]		Separation of Magazines[12]	
Pounds Over	Pounds not Over	Barricaded[6,7,8]	Unbarricaded	Barricaded[6,7,8]	Unbarricaded	Barricaded[6,7,8]	Unbarricaded	Barricaded[6,7,8]	Unbarricaded
250,000	275,000	2,215	2,215	670	1,340	1,950	2,000	360	720
275,000	300,000	2,275	2,275	690	1,380	2,000	2,000	385	770

Superscript numerals refer to explanatory footnotes.

Explanatory Notes Essential to the Application of the American Table of Distances for Storage of Explosives.

(1) "Explosive materials" means explosives, blasting agents, and detonators.

(2) "Explosives" means any chemical compound, mixture, or device, the primary or common purpose of which is to function by explosion. A list of explosives determined to be within the coverage of Title 18, *United States Code*, Chapter 40, "Importation, Manufacture, Distribution and Storage of Explosive Materials," is issued at least annually by the Director of the Bureau of Alcohol, Tobacco, and Firearms of the Department of the Treasury. For quantity and distance purposes, detonating cord of 50 grains per foot should be calculated as equivalent to 8 lb (3.7 kg) of high explosives per 1000 ft (305 m). Heavier or lighter core loads should be rated proportionately.

(3) "Blasting agents" means any material or mixture consisting of fuel and oxidizer, intended for blasting, and not otherwise defined as an explosive, provided that the finished product, as mixed for use or shipment, cannot be detonated by means of a No. 8 test blasting cap where unconfined.

(4) "Detonator" means any device containing any initiating or primary explosive that is used for initiating detonation. A detonator may not be permitted to contain more than 10 g of total explosives by weight, excluding ignition or delay charges. The term includes, but is not limited to, electric blasting caps of instantaneous and delay types, blasting caps for use with safety fuses, detonating cord delay connectors, and nonelectric instantaneous and delay blasting caps that use detonating cord, shock tube, or any other replacement for electric leg wires. All types of detonators in strengths through No. 8 cap should be rated at 1½ lb (0.7 kg) of explosives per 1000 caps.

(5) For strengths higher than No. 8 cap, the manufacturer should be consulted.

(6) "Magazine" means any building, structure, or container, other than an explosives manufacturing building, approved for the storage of explosive materials.

(7) "Natural barricade" means natural features of the ground, such as hills, or timber of sufficient density that the surrounding exposures that need protection cannot be seen from the magazine when the trees are bare of leaves.

(8) "Artificial barricade" means an artificial mound or revetted wall of earth of a minimum thickness of 3 ft (0.9 m).

(9) "Barricaded" means the effective screening of a building containing explosive materials from the magazine or another building, a railway, or a highway by a natural or an artificial barrier. A straight line from the top of any sidewall of the building containing explosive materials to the eave line of any magazine or other building or to a point 12 ft (3.7 m) above the center of a railway or highway shall pass through such barrier.

(10) "Inhabited building" means a building regularly occupied in whole or part as a habitation for human beings, or any church, schoolhouse, railroad station, store, or other structure where people are accustomed to assemble, but does not include any building or structure occupied in connection with the manufacture, transportation, storage, or use of explosive materials.

(11) "Railway" means any steam, electric, or other railroad or railway that carries passengers for hire.

(12) "Public Highway" means any road, street, or way, whether on public or private property, open to public travel.

(13) Where two or more storage magazines are located on the same property, each magazine shall comply with the minimum distances specified from inhabited buildings, railways, and highways, and, in addition, they should be separated from each other by not less than the distances shown for "separation of magazines," except that the quantity of explosive materials contained in detonator magazines shall govern with regard to the spacing of said detonator magazines from magazines containing other explosive materials. If any two or more magazines are separated from each other by less than the specified "separation of magazines" distances, such magazines, as a group, shall be considered as one magazine, and the total quantity of explosive materials stored in such group shall be treated as if stored in a single magazine located on the site of any magazine of the group, and shall comply with the minimum specified distances from other magazines, inhabited buildings, railways, and highways.

(14) Storage in excess of 300,000 lb (136,200 kg) of explosive materials in one magazine generally is not necessary for commercial enterprises.

(15) This table applies only to the manufacture and permanent storage of commercial explosive materials. It is not applicable to the transportation of explosives or any handling or temporary storage necessary or incident thereto. It is not intended to apply to bombs, projectiles, or other heavily encased explosives.

(16) Where a manufacturing building on an explosive materials plant site is designed to contain explosive materials, the building shall be located at a distance from inhabited buildings, public highways, and passenger railways in accordance with the American Table of Distances based on the maximum quantity of explosive materials permitted to be in the building at one time.

Source: Reprinted from *IME Safety Library Publication No. 2*, with permission of the Institute of Makers of Explosives, revised in June of 1991.
[**495:** Table 9.4.1(b)]

Copyright National Fire Protection Association
Provided by IHS under license with NFPA
No reproduction or networking permitted without license from IHS
Not for Resale

34.3.3.3.1 Explosives that are in accordance with NFPA 495 shall not be required to comply with 34.3.3.3.

34.3.3.3.2 Distances shall be measured from the perimeter wall to property lines, including those on a public way.

34.3.3.3.3 Quantities of explosives used in applying Table 34.3.3.3 shall be based on equivalent pounds (kilograms) of TNT.

34.3.3.4 Frangible Building. Frangible buildings complying with 7.4.1.3.5.3 shall not be required to be protected with an automatic sprinkler system.

34.3.4 Protection Level 2.

34.3.4.1 General. Buildings, or portions thereof, required to comply with Protection Level 2 shall comply with 34.3.2 and 34.3.4.2 through 34.3.4.5.

34.3.4.2 Exterior Wall Required.

34.3.4.2.1 Buildings, or portions thereof, required to comply with Protection Level 2 shall be located on property such that not less than 25 percent of the perimeter wall is an exterior wall.

34.3.4.2.2 Rooms utilized for the use, dispensing, mixing, and storage of flammable and combustible liquids having a floor area of not more than 500 ft^2 (46.5 m^2) shall not be required to be located on the outer perimeter of the building where such rooms comply with NFPA 30.

34.3.4.3 Minimum Distance to Property Lines or Horizontal Separation.

34.3.4.3.1 Buildings, or portions thereof, required to comply with Protection Level 2 shall be set back from property lines, or be provided with a horizontal separation in accordance with 7.3.4.2, at the following distances:

(1) Not less than 30 ft (9.1 m) where the area of the occupancy exceeds 1000 ft^2 (93 m^2) and a detached building is not required
(2) Not less than 50 ft (15 m) where a detached building is required by Table 34.3.4.4.1
(3) Not less than the distances required by Table 34.3.3.3 for buildings containing materials with explosive characteristics

34.3.4.3.2 Distances shall be measured from the walls enclosing the Protection Level 2 area to property lines, including those on a public way, or in accordance with 7.3.4.2 for buildings on the same lot.

34.3.4.4 Detached Building Required.

34.3.4.4.1 Buildings required to comply with Protection Level 2 and containing quantities of high hazard contents exceeding the quantity limits set forth in Table 34.3.4.4.1 shall be used for no other purpose, shall not exceed one story in height, and shall be without basements, crawl spaces, or other under-floor spaces.

34.3.4.4.2 Buildings that contain high hazard Level 2 contents also shall be permitted to contain high hazard Level 3 or high hazard Level 4 contents, provided that the materials are separated as otherwise required by the provisions of this *Code* and NFPA 1.

34.3.4.4.3 The roof of buildings specified in 34.3.4.4.1 shall be of lightweight construction with suitable thermal insulation to prevent sensitive material from reaching its decomposition temperature.

Table 34.3.4.4.1 High Hazard Level 2 and High Hazard Level 3 Materials—Required Detached Storage

Material		Maximum Quantity Without a Detached Storage Building: Solids and Liquids (tons)	Maximum Quantity Without a Detached Storage Building: Gases (ft^3)
Oxidizers	Class 3	1,200	NA
	Class 2	2,000	NA
Organic peroxides	Class II	25	NA
	Class III	50	NA
Unstable (reactive) materials	Class 3, nondetonable	1	2,000
	Class 2	25	10,000
Water-reactive materials	Class 3	1	NA
	Class 2, deflagrating	25	NA
Pyrophoric gases		NA	2,000

For SI units, 1 ton = 0.9 met tons; 1 ft^3 = 0.0283 m^3.
NA: Not applicable.

34.3.4.5 Water-Reactive Materials.

34.3.4.5.1 Rooms or areas containing Class 2 or Class 3 water-reactive materials shall be resistant to water penetration.

34.3.4.5.2 Piping for conveying water, other than fire protection piping, shall not route over or through areas containing Class 2 or Class 3 water-reactive materials, unless isolated by approved liquid-tight construction.

34.3.5 Protection Level 3.

34.3.5.1 General. Buildings, or portions thereof, required to comply with Protection Level 3 shall comply with 34.3.2 and 34.3.5.2 through 34.3.5.7.

34.3.5.2 Exterior Wall Required.

34.3.5.2.1 Buildings, or portions thereof, required to comply with Protection Level 3 shall be located on property such that not less than 25 percent of the perimeter wall is an exterior wall.

34.3.5.2.2 Rooms utilized for the use, dispensing, mixing, and storage of flammable and combustible liquids having a floor area of not more than 500 ft^2 (46.5 m^2) shall not be required to be located on the outer perimeter of the building where such rooms are in accordance with NFPA 30.

34.3.5.3 Minimum Distance to Property Lines or Horizontal Separation.

34.3.5.3.1 Buildings, or portions thereof, required to comply with Protection Level 3 shall be set back from property lines,

Copyright National Fire Protection Association
Provided by IHS under license with NFPA
No reproduction or networking permitted without license from IHS
Not for Resale

or be provided with a horizontal separation in accordance with 7.3.4.2, at the following distances:

(1) Not less than 30 ft (9.1 m) where the area of the occupancy exceeds 1000 ft^2 (93 m^2) and a detached building is not required
(2) Not less than 50 ft (15 m) where a detached building is required by Table 34.3.4.4.1
(3) Not less than the distances required by Table 34.3.3.3 for buildings containing materials with explosive characteristics

34.3.5.3.2 Distances shall be measured from the walls enclosing the Protection Level 3 area to property lines, including those on a public way, or in accordance with 7.3.4.2 for buildings on the same lot.

34.3.5.4 Detached Building Required.

34.3.5.4.1 Buildings required to comply with Protection Level 3 and containing quantities of high hazard contents exceeding the quantity limits set forth in Table 34.3.4.4.1 shall be used for no other purpose, shall not exceed one story in height, and shall be without basements, crawl spaces, or other under-floor spaces.

34.3.5.4.2 Buildings that contain high hazard Level 3 contents also shall be permitted to contain high hazard Level 2 or high hazard Level 4 contents, provided that the materials are separated as otherwise required by the provisions of this *Code* and NFPA 1.

34.3.5.5 Detached Unprotected Building. Where acceptable to the authority having jurisdiction, based on a determination that a protected building is not practical and an assessment of acceptable risk, storage buildings required to comply with Protection Level 3 shall be permitted without fire protection systems, provided that the following provisions are met:

(1) The building, or portions thereof, shall have a horizontal separation of at least 200 ft (61 m) from exposed business, industrial, mercantile, and storage occupancies on the same lot and from any property line that is or can be built upon. Where protection for exposures is provided in accordance with 34.3.5.5(9), the horizontal separation shall be at least 100 ft (30.5 m).
(2) The building, or portions thereof, shall have a horizontal separation of at least 1000 ft (305 m) from exposed occupancies other than business, industrial, mercantile, and storage occupancies on the same lot and from any property line that is or can be built upon. Where protection for exposures is provided in accordance with 34.3.5.5(9), the horizontal separation shall be at least 500 ft (150 m).
(3) The building shall not exceed one story in height.
(4) The building shall not have basements, crawl spaces, or other under-floor accessible spaces.
(5) Egress from the building shall not exceed 50 percent of the distances listed in Table 34.3.2.4.1, measured as required in 11.6.2 and in compliance with 34.3.2.4.2 through 34.3.2.4.5.
(6) The building shall comply with the requirements of the following:
    (a) 34.3.2.2 for building height
    (b) 34.3.2.5 for ventilation
    (c) 34.3.2.6 for explosion control
    (d) 34.3.2.7 for standby and emergency power
    (e) 34.3.2.9 for floor construction
    (f) 34.3.2.10 for unprotected vertical openings
(7) Spill control shall comply with 34.3.2.8.2.
(8) Secondary containment shall comply with 34.3.2.8.3, except that containment for fire protection water shall not be required if the building is not provided with a fire protection sprinkler system.
(9) Where credit is taken for protection for exposures in accordance with 34.3.5.5(1), 34.3.5.5(2), protection of exposures shall consist of fire protection for structures on property adjacent to the storage building that is provided by (1) a public fire department or (2) a private fire brigade maintained on the property adjacent to the storage building, either of which shall be capable of providing cooling water streams to protect the property adjacent to the storage building.

34.3.5.6 Roofs. The roofs of buildings specified in 34.3.5.4 and 34.3.5.5 shall be of lightweight construction with suitable thermal insulation to prevent sensitive material from reaching its decomposition temperature.

34.3.5.7 Water-Reactive Materials.

34.3.5.7.1 Rooms or areas containing Class 2 or Class 3 water-reactive materials shall be resistant to water penetration.

34.3.5.7.2 Piping for conveying water, other than fire protection piping, shall not route over or through areas containing Class 2 or Class 3 water-reactive materials, unless isolated by approved liquid-tight construction.

34.3.5.8 Class I, Class II, and Class IIIA Flammable and Combustible Liquids.

34.3.5.8.1 Rooms used for the storage of Class I flammable liquids shall not be located in the basement.

34.3.5.8.2 Rooms in excess of 500 ft^2 (46.5 m^2) shall have at least one exterior door approved for fire department access.

34.3.6 Protection Level 4. Buildings, or portions thereof, required to comply with Protection Level 4 shall comply with 34.3.2, 34.3.6.1, and 34.3.6.2.

34.3.6.1 Gas Rooms.

34.3.6.1.1 Gas rooms required by this *Code*, NFPA 1, or NFPA 55 for storage of toxic or highly toxic gases shall be separated from other areas by not less than a 2-hour fire barrier wall or a 2-hour horizontal assembly, where the area is 300 ft^2 (27.9 m^2) or more, and by not less than 1-hour fire resistance–rated construction where the area is less than 300 ft^2 (27.9 m^2).

34.3.6.1.2 Exhaust ventilation for gas rooms shall be designed to operate at a negative pressure in relation to the surrounding areas and shall direct the exhaust ventilation to an exhaust system.

34.3.6.2 Highly Toxic Solids and Liquids. Highly toxic solids and liquids not stored in approved hazardous materials storage cabinets shall be isolated from other hazardous materials storage by a 1-hour fire barrier.

34.3.7 Protection Level 5.

34.3.7.1 General. In addition to the requirements set forth elsewhere in this *Code*, buildings, and portions thereof, required to comply with Protection Level 5 shall comply with 34.3.2, 34.3.7.1 through 34.3.7.3, NFPA 1, and NFPA 318, *Standard for the Protection of Semiconductor Fabrication Facilities*.

Copyright National Fire Protection Association
Provided by IHS under license with NFPA
No reproduction or networking permitted without license from IHS
Not for Resale

34.3.7.1.1 Location of Semiconductor Manufacturing Operations. Semiconductor manufacturing operations shall be conducted in fabrication areas.

34.3.7.1.2 Transporting Hazardous Production Materials to Fabrication Areas.

34.3.7.1.2.1 Hazardous production materials shall be transported from delivery locations or storage areas to fabrication areas through enclosed piping or tubing systems that comply with NFPA 1 or through service corridors complying with 34.3.7.1.2.2(A).

34.3.7.1.2.2 In existing buildings, where an existing fabrication area is altered or modified, hazardous production materials shall also be permitted to be transported from delivery locations or storage areas to fabrication areas through exit access corridors complying with 34.3.7.2.2, subject to the conditions described in 34.3.7.1.2.2(A) through (C).

(A) Exit access corridors adjacent to the fabrication area where the alteration work is to be done shall be fire resistive for a length not less than the following:

(1) Length of the common wall adjoining both the corridor and the fabrication area
(2) Distance to the point of entry of hazardous production material (HPM) into the exit access corridor serving that fabrication area

(B) An emergency alarm system complying with 34.3.7.3.6 shall be provided.

(C) Requirements for pass-throughs shall be as follows:

(1) Self-closing doors having a fire protection rating of 1 hour or more shall separate pass-throughs from existing exit access corridors.
(2) Pass-throughs shall be constructed as required for the exit access corridor.
(3) Pass-throughs shall be protected by an approved automatic fire extinguishing system.

34.3.7.2 Building Features.

34.3.7.2.1 Fabrication Areas.

34.3.7.2.1.1 Location. Fabrication areas shall be located such that occupied levels are at or above the first story.

34.3.7.2.1.2 Hazardous Materials Quantity Limits.

(A) The aggregate quantity of hazardous materials in storage and in use within a single fabrication area shall not exceed one of the following, whichever is greater:

(1) Quantities set forth in Table 34.3.7.2.1.2(A)
(2) Maximum allowable quantities per control area set forth in Table 34.1.3.1

Table 34.3.7.2.1.2(A) Quantity Limits for Hazardous Materials in a Single Fabrication Area[a]

Hazard Category	Solids (lb/ft^2)	Liquids (gal/ft^2)	Gas (ft^3 at NTP/ ft^2)
Combustible liquid			
II	NA	0.01	NA
IIIA	NA	0.02	NA
IIIB	NA	NL	NA
Combination Classes I, II, and IIIA	NA	0.04	NA
Cryogenic			
Flammable	NA	NA	See footnote b.
Oxidizing	NA	NA	1.25
Explosives	See footnote c.	See footnote c.	See footnote c.
Flammable gas			
Gaseous	NA	NA	See footnote b.
Liquefied	NA	NA	See footnote b.
Flammable liquid			
IA	NA	0.0025	NA
IB	NA	0.025	NA
IC	NA	0.025	NA
Combination Classes IA, IB, and IC	NA	0.025	NA
Combination Classes I, II, and IIIA	NA	0.04	NA
Flammable solid	0.001	NA	NA
Organic peroxide			
Unclassified detonable	See footnote c.	See footnote c.	NA
I	See footnote c.	See footnote c.	NA
II	0.025	0.0025	NA
III	0.1	0.01	NA
IV	NL	NL	NA
V	NL	NL	NA
Oxidizing gas			
Gaseous	NA	NA	1.25
Liquefied	NA	NA	1.25
Combination of gaseous and liquefied	NA	NA	1.25
Oxidizer			
4	See footnote c.	See footnote c.	NA
3	0.003	0.003	NA
2	0.003	0.003	NA
1	NL	NL	NA
Combination oxidizer Classes 1, 2, and 3	0.003	0.003	NA
Pyrophoric	See footnote c.	0.00125	See footnotes b and d.
Unstable reactive			
4	See footnote c.	See footnote c.	See footnote c.
3	0.025	0.0025	See footnote c.
2	0.1	0.01	See footnote c.
1	NL	NL	NL
Water-reactive			
3	See footnote c.	0.00125	NA
2	0.25	0.025	NA
1	NL	NL	NA

(continues)

Copyright National Fire Protection Association
Provided by IHS under license with NFPA
No reproduction or networking permitted without license from IHS
Not for Resale

Table 34.3.7.2.1.2(A) *Continued*

Hazard Category	Solids (lb/ft^2)	Liquids (gal/ft^2)	Gas (ft^3 at NTP/ ft^2)
Corrosive	NL	NL	NL
Highly toxic	NL	NL	See footnote b.
Toxics	NL	NL	See footnote b.

For SI units, 1 lb = 0.454 kg; 1 ft^2 = 0.093 m^2; 1 ft^3 = 0.0283 m^3.

NTP: Normal temperature and pressure. [70°F (21°C) and 14.7 psi (30 kPa)].

NA: Not applicable.

NL: Quantity of hazardous materials in a single fabrication area not limited.

[a] Hazardous materials within piping are not permitted to be included in the calculated quantities.

[b] The aggregate quantity of flammable, pyrophoric, toxic, and highly toxic gases is not permitted to exceed 9000 ft^3 (254.9 m^3) at NTP.

[c] The quantity of hazardous materials in a single fabrication is not permitted to exceed maximum allowable quantities per control area in Table 34.1.3.1.

[d] The aggregate quantity of pyrophoric gases in the building is not permitted to exceed quantity limits set forth in Table 34.3.4.4.1.

(B) Storage of hazardous materials classified as hazardous production materials shall be further limited such that the quantity stored within a single fabrication area does not exceed the maximum allowable quantities per control area set forth in Table 34.1.3.1.

34.3.7.2.1.3 Fire-Resistive Separation. Fabrication areas shall be separated from other parts of the building, including exit access corridors, by not less than 1-hour fire resistance–rated assemblies.

(A) Doors within the assemblies specified in 34.3.7.2.1.3, including doors to corridors, shall be self-closing fire door assemblies with a ¾-hour or greater fire resistance rating.

(B) Windows between fabrication areas and exit access corridors shall be permitted to be fixed glazing listed and labeled for a fire protection rating of at least ¾ hour.

(C) Where it is necessary to construct multiple adjoining fabrication areas to comply with the hazardous materials quantity limits specified in 34.3.7.2.1.2(A), 1-hour fire resistance–rated assemblies shall be provided to separate the fabrication areas from each other in accordance with Chapter 7.

34.3.7.2.1.4 Floors.

(A) Except for surfacing, floors within fabrication areas shall be of noncombustible construction.

(B) Floors of fabrication areas separating fabrication areas from other uses shall be liquid-tight.

34.3.7.2.1.5 Vertical Openings. Openings through floors of fabrication areas shall be permitted to be unprotected in accordance with 8.12.4.2 where the interconnected levels are used solely for mechanical equipment directly related to the fabrication areas.

(A) Mechanical, duct, and piping penetrations within a fabrication area shall not extend through more than two floors.

(B) The annular space around equipment passing through the penetrations shall be sealed at the floor level to restrict the movement of air.

(C) The fabrication area, including levels interconnected with ductwork and piping, shall be regulated as a single conditioned environment.

34.3.7.2.1.6 Egress from Fabrication Areas. In areas required to comply with Protection Level 5, the travel distance within a fabrication area to an exterior exit door, an exit access corridor, a horizontal exit, an exit passageway, or an enclosed exit stairway shall not exceed 200 ft (61 m).

34.3.7.2.2 Exit Access Corridors.

34.3.7.2.2.1 Exit access corridors shall be separated from fabrication areas as specified in 34.3.7.2.1.3.

34.3.7.2.2.2 Exit access corridors shall not contain HPM and shall not be used for transporting HPM, except through closed piping systems complying with 34.3.7.3.1.3.

34.3.7.2.3 Service Corridors. Service corridors shall be permitted to be regulated as part of the Protection Level 5 area.

34.3.7.2.3.1 Minimum Width. The clear width of a service corridor shall be not less than 5 ft (1.5 m) and shall be not less than 33 in. (840 mm) wider than the widest cart or truck used in the corridor.

34.3.7.2.3.2 Fire-Resistive Separation. Service corridors shall be separated from exit access corridors as required by 34.3.7.2.1.3.

34.3.7.2.3.3 Exiting.

(A) Service corridors shall not be used as a required exit access corridor.

(B) Service corridors shall be provided with two or more exits, and not more than one-half of the required number of exits shall lead to the fabrication area.

(C) The travel distance within a service corridor to an exit or to a door into a fabrication area shall not exceed 75 ft (23 m).

(D) Dead ends shall not exceed 4 ft (1.2 m).

(E) Doors from service corridors shall swing in the direction of exit travel and shall be self-closing.

34.3.7.2.4 Storage Areas for Hazardous Production Materials.

34.3.7.2.4.1 General.

(A) The storage of HPM in fabrication areas in quantities not exceeding the limits set forth in Table 34.1.3.1 shall be within approved or listed storage cabinets, within gas cabinets, or within a workstation.

(B) The storage of HPM in quantities greater than those specified in Table 34.1.3.1 shall be in gas rooms complying with 34.3.6.1 or HPM rooms complying with 34.3.7.2.4.2, as appropriate for the materials stored.

(C) The storage of hazardous materials other than HPM shall be in accordance with other applicable provisions of this *Code* and NFPA 1.

34.3.7.2.4.2 HPM Rooms.

(A) HPM rooms shall be constructed as required for the applicable protection level, based on the classification of hazardous materials stored therein.

Copyright National Fire Protection Association
Provided by IHS under license with NFPA
No reproduction or networking permitted without license from IHS
Not for Resale

Table 34.3.7.2.4.6 Minimum Separation of HPM

Material	Highly Toxic	Toxic	Acid	Base	Flammable	Oxidizer	Water-Reactive	Pyrophoric	Unstable (reactive)	Organic Peroxide
Highly Toxic		NR	1 hr	1 hr	1 hr	1 hr	1 hr	1 hr	1 hr	1 hr
Toxic	NR		S	S	S	S	S	S	S	S
Acid	1 hr	S		S	S*	S	S	S*	S	S
Base	1 hr	S	S		S	S	S	S	S	S
Flammable	1 hr	S	S*	S		S	R	S	S	S
Oxidizer	1 hr	S	S	S	S		S	S*	S	S
Water-Reactive	1 hr	S	S	S	R	S		S	S	S
Pyrophoric	1 hr	S	S*	S	S	S*	S		S	S
Unstable (reactive)	1 hr	S	S	S	S	S	S	S		S
Organic Peroxide	1 hr	S	S	S	S	S	S	S	S	

NR: Not required.

1 hr: 1-hour fire resistance–rated construction.

S: Separation by a partial noncombustible partition extending not less than 18 in. (455 mm) above and to the sides of the stored material.

R: Separate rooms, which are not required to have a fire resistance rating.

Note: HPM gases are required to be separated from HPM liquids and solids by 1-hour fire resistance–rated construction or are required to be kept in approved gas cabinets. HPM gases also are required to be separated from gases in other HPM hazard categories, as required by Table 34.3.7.2.4.6, or are required to be kept in approved gas cabinets.

* Separation by not less than 20 ft (6.1 m) is permitted in lieu of a noncombustible partition.

(B) HPM rooms shall be separated from other areas by not less than a 2-hour fire barrier wall and horizontal assembly, where the area is 300 ft^2 (27.9 m^2) or more, and by not less than 1-hour fire resistance–rated construction where the area is less than 300 ft^2 (27.9 m^2).

(C) Where two means of egress are required by 34.3.2.4.3 for an HPM room, or gas room, one means of egress shall be directly to the outside of the building.

(D) Except for surfacing, floors of HPM rooms shall be of noncombustible liquid-tight construction.

(E) Raised grating over floors shall be of noncombustible materials.

34.3.7.2.4.3 Doors. Door openings to HPM rooms and gas rooms that penetrate a fire barrier wall, including doors to corridors, shall be self-closing fire door assemblies having a fire protection rating of not less than ¾ hour.

34.3.7.2.4.4 Ventilation. Ventilation for HPM rooms and gas rooms shall comply with 34.3.2.5.

34.3.7.2.4.5 Emergency Alarm System. Emergency alarms for HPM rooms and gas rooms shall comply with 34.3.7.3.6.2.

34.3.7.2.4.6 Separation of HPM. Hazardous production materials stored in HPM rooms and gas rooms shall be separated from incompatible materials in accordance with Table 34.3.7.2.4.6.

34.3.7.2.5 Emergency Control Station.

34.3.7.2.5.1 An emergency control station shall be provided on the premises at an approved location, outside of the fabrication area, and shall be continuously staffed by trained personnel.

34.3.7.2.5.2 The emergency control station shall receive signals from emergency equipment and alarm and detection systems.

34.3.7.2.5.3 The emergency equipment and alarm and detection systems specified in 34.3.7.2.5.2 shall include, but shall not necessarily be limited to, the following where such equipment or systems are required to be provided by 34.3.7 or elsewhere in this *Code*:

(1) Automatic fire sprinkler system alarm and monitoring systems
(2) Manual fire alarm systems
(3) Emergency alarm systems
(4) Continuous gas detection systems
(5) Smoke detection systems
(6) Emergency power systems

34.3.7.3 Systems and Equipment.

34.3.7.3.1 Piping and Tubing.

34.3.7.3.1.1 General. HPM piping and tubing shall comply with 34.3.7.3.1.2 and 34.3.7.3.1.3 and shall be installed in accordance with ASME B31.3, *Process Piping*, and NFPA 1.

Copyright National Fire Protection Association
Provided by IHS under license with NFPA
No reproduction or networking permitted without license from IHS
Not for Resale

34.3.7.3.1.2 Location of HPM Supply Piping and Tubing in Service Corridors. HPM supply piping and tubing in service corridors shall be exposed to view.

34.3.7.3.1.3 Installation of HPM Piping and Tubing in Exit Access Corridors and Above Other Occupancies. The installation of HPM piping and tubing within the space defined by the walls of exit access corridors and the floor or roof above, or in concealed spaces above other occupancies, shall be in accordance with the following, except for transverse crossings of the corridors by supply piping that is enclosed within a ferrous pipe or tube for the width of the corridor:

(1) Automatic sprinklers shall be installed within the space, unless the space is less than 6 in. (150 mm) in the least dimension.
(2) Ventilation with not less than six air changes per hour shall be provided, and the space shall not be used to convey air from any other area.
(3) Where the piping or tubing is used to transport HPM liquids, a receptor that meets the following criteria shall be installed below such piping or tubing:
   (a) The receptor shall be designed to collect any discharge or leakage and drain it to an approved location.
   (b) The 1-hour enclosure shall not be used as part of the receptor.
(4) HPM supply piping and tubing and HPM nonmetallic waste lines shall meet the following criteria:
   (a) The lines shall be separated from the exit access corridor and from areas not complying with Protection Level 5 by construction as required for walls or partitions that have a fire resistance rating of not less than 1 hour.
   (b) Where gypsum wallboard is used, joints on the piping side of the enclosure shall not be required to be taped, provided that the joints occur over framing members.
   (c) Access openings into the enclosure shall be protected by approved fire-rated assemblies.
(5) Readily accessible manual or automatic remotely activated, fail-safe emergency shutoff valves shall be installed on piping and tubing other than waste lines at the following locations:
   (a) At branch connections into the fabrication area
   (b) At entries into exit access corridors

34.3.7.3.2 Electrical Equipment in Fabrication Areas.

34.3.7.3.2.1 Electrical equipment and devices within the fabrication area shall comply with Chapter 52.

34.3.7.3.2.2 The requirements for hazardous locations shall not be required to be applied where the average air change is at least four times that set forth in 34.3.7.3.3 and where the number of air changes at any location is not less than three times that required by 34.3.7.3.3.

34.3.7.3.2.3 The use of recirculated air shall be permitted.

34.3.7.3.2.4 Workstations shall not be energized without adequate exhaust ventilation. *(See 34.3.7.3.3 for workstation exhaust ventilation requirements.)*

34.3.7.3.3 Ventilation Systems.

34.3.7.3.3.1 Fabrication Area. Mechanical exhaust ventilation shall be provided throughout the fabrication area at the rate of not less than 1 $ft^3/min/ft^2$ (0.044 $L/s/m^2$) of floor area.

(A) The use of recirculated air shall be permitted to meet the average and minimum number of air changes specified in 34.3.7.3.3.2.

(B) The exhaust air duct system of one fabrication area shall not connect to another duct system outside that fabrication area within the building.

(C) Ventilation shall be provided to capture and exhaust fumes and vapors at workstations.

(D) Two or more operations at a workstation shall not be connected to the same exhaust system where either one or the combination of the substances removed could constitute a fire, an explosion, or a hazardous chemical reaction within the exhaust duct system.

(E) Exhaust ducts penetrating occupancy separations shall be contained in a shaft of equivalent fire resistance–rated construction.

(F) Exhaust ducts shall not penetrate fire walls.

(G) Fire dampers shall not be installed in exhaust ducts.

(H) The area below the raised floor in a fabrication area and the interstitial spaces above a fabrication area, used solely for building or process systems directly related to the level above or below a fabrication area, shall not be considered a plenum.

34.3.7.3.3.2 Ventilation of Service Corridors, HPM Rooms, and Gas Rooms. Service corridors, HPM rooms, and gas rooms shall be mechanically ventilated at 1 $ft^3/min/ft^2$ (0.044 $L/s/m^2$) or six air changes per hour, whichever is greater.

34.3.7.3.4 Gas Detection Systems. A continuous gas detection system shall be provided in the locations described in 34.3.7.3.4.1 through 34.3.7.3.4.4 for HPM gases where the physiological warning properties of the gas are at a higher level than the accepted permissible exposure limit (PEL) for the gas and for flammable gases.

34.3.7.3.4.1 Fabrication Areas. A continuous gas detection system shall be provided at locations in fabrication areas where gas is used.

34.3.7.3.4.2 HPM Rooms. A continuous gas detection system shall be provided in HPM rooms that do not comply with the requirements for gas rooms where gas is used in the room.

34.3.7.3.4.3 Gas Cabinets, Exhausted Enclosures, and Gas Rooms.

(A) A continuous gas detection system shall be provided in gas cabinets and exhausted enclosures.

(B) A continuous gas detection system shall be provided in gas rooms where gases are not located in gas cabinets or exhausted enclosures.

34.3.7.3.4.4 Exit Access Corridors.

(A) Where gases are transported in piping placed within the space defined by the walls of an exit access corridor and the floor or roof above the exit access corridor, a continuous gas detection system shall be provided where piping is located and in the exit access corridor.

(B) The continuous gas detection system shall not be required for occasional transverse crossings of the corridors by supply piping that is enclosed in a ferrous pipe or tube for the width of the corridor.

Copyright National Fire Protection Association
Provided by IHS under license with NFPA
No reproduction or networking permitted without license from IHS
Not for Resale

34.3.7.3.4.5 Gas Detection System Operation. The continuous gas detection system shall be capable of monitoring the room, area, or equipment in which the gas is located at or below the PEL or ceiling limit (CL) of the gas for which detection is provided.

(A) For flammable gases, the monitoring detection threshold level shall be vapor concentrations in excess of 20 percent of the lower explosive limit (LEL).

(B) In addition to the requirements of 34.3.7.3.4.5 and 34.3.7.3.4.5(A), monitoring for highly toxic and toxic gases shall also comply with the requirements in NFPA 1 for highly toxic and toxic material.

34.3.7.3.4.6 Alarms. The gas detection system shall be provided with an emergency alarm complying with 34.3.7.3.6.3.

34.3.7.3.4.7 Shutoff of Gas Supply.

(A) The gas detection system shall automatically close the shutoff valve at the source on gas supply piping and tubing related to the system being monitored for which gas is detected when a short-term hazard condition is detected.

(B) Where the gas detection sampling point initiating the gas detection system alarm is at the use location or within a gas valve enclosure of a branch line downstream of a piping distribution manifold, the shutoff valve for the branch line located in the piping distribution manifold enclosure shall automatically close.

(C) Automatic closure of shutoff valves shall comply with the following:

(1) Where the gas detection sampling point initiating the gas detection system alarm is within a gas cabinet or exhausted enclosure, the shutoff valve in the gas cabinet or exhausted enclosure for the specific gas detected shall automatically close.
(2) Where the detection sampling point initiating the gas detection system alarm is within a room, and compressed gas containers are not in gas cabinets or an exhausted enclosure, the shutoff valves on all gas lines for the specific gas detected shall automatically close.
(3) Where the gas detection sampling point initiating the gas detection system alarm is within a piping distribution manifold enclosure, the shutoff valve for the compressed gas container of specific gas detected supplying the manifold shall automatically close.

34.3.7.3.5 Manual Fire Alarm System.

34.3.7.3.5.1 An approved manual fire alarm system shall be provided throughout buildings required to comply with Protection Level 5.

34.3.7.3.5.2 Activation of the alarm system shall initiate a local alarm and transmit a signal to the emergency control station.

34.3.7.3.5.3 The fire alarm system shall be designed and installed in accordance with *NFPA 72*, *National Fire Alarm Code*.

34.3.7.3.6 Emergency Alarm System.

34.3.7.3.6.1 Exit Access Corridors and Service Corridors.

(A) An approved emergency alarm system shall be provided for exit access corridors and service corridors.

(B) Emergency alarm-initiating devices shall be installed in exit access corridors and service corridors at not more than 150 ft (46 m) intervals and at each exit and exit access doorway.

34.3.7.3.6.2 HPM Rooms and Gas Rooms.

(A) An approved emergency alarm system shall be provided for HPM rooms and gas rooms.

(B) Emergency alarm-initiating devices shall be installed outside of each interior exit access door for HPM rooms and gas rooms.

34.3.7.3.6.3 Gas Detection Systems.

(A) Gas detection systems shall initiate an alarm when a short-term hazard condition is detected.

(B) The local alarm shall be both visual and audible and shall provide warning both inside and outside the area where the gas is detected.

(C) The audible alarm shall be distinct from all other alarms.

34.3.7.3.6.4 Alarm-Initiating Devices. An approved emergency telephone system, a local alarm manual pull station, or other approved alarm-initiating devices shall be permitted to be used as emergency alarm-initiating devices.

34.3.7.3.6.5 Alarm Notification. Activation of the emergency alarm system shall sound a local alarm and notify the emergency control station.

34.3.7.3.7 Emergency Power System. An emergency power system shall be provided for buildings, or portions thereof, required to comply with Protection Level 5 where required in 34.3.7.3.7.2.

34.3.7.3.7.1 Design. The emergency power system shall be designed to automatically supply power to required electrical systems when the normal electrical supply system is interrupted.

34.3.7.3.7.2 Where Required. Emergency power shall be provided for electrically operated equipment and connected control circuits for the following systems:

(1) HPM exhaust ventilation systems
(2) HPM gas cabinet ventilation systems
(3) HPM exhausted enclosure ventilation systems
(4) HPM gas room ventilation systems
(5) HPM gas detection systems
(6) Emergency alarm systems
(7) Electrically operated systems required elsewhere in this *Code* applicable to the use, storage, or handling of HPM

34.3.7.3.7.3 Emergency Power for Exhaust Ventilation Systems. Exhaust ventilation systems shall be permitted to be designed to operate at not less than one-half the normal fan speed on the emergency power system where it is demonstrated that the level of exhaust will maintain a safe atmosphere.

34.3.7.3.7.4 Emergency Power for Detection, Alarm, and Communications Systems. Power for detection, alarm, and communications systems shall be in accordance with *NFPA 72*.

34.3.7.3.8 Fire Sprinkler System Protection in Exhaust Ducts for HPM.

34.3.7.3.8.1 General. Automatic fire sprinkler system protection shall be provided in exhaust ducts conveying vapors, fumes, mists, or dusts generated from HPM in accordance with 34.3.7.3.8.2 through 34.3.7.3.8.4 and the *Uniform Mechanical Code*, as referenced in Chapter 50.

Copyright National Fire Protection Association
Provided by IHS under license with NFPA
No reproduction or networking permitted without license from IHS
Not for Resale

34.3.7.3.8.2 Metallic Exhaust Ducts and Noncombustible Nonmetallic Exhaust Ducts. Automatic fire sprinkler system protection shall be provided in metallic exhaust ducts and noncombustible, nonmetallic exhaust ducts where all of the following conditions apply:

(1) Where the largest cross-sectional diameter is equal to or greater than 10 in. (255 mm), or the cross-sectional cylindrical or rectangular area is greater than or equal to 80 in.^{2} (516 cm^2)
(2) Where the ducts are within the building
(3) Where the ducts are conveying flammable vapors or fumes

34.3.7.3.8.3 Combustible Nonmetallic Exhaust Ducts. Automatic fire sprinkler system protection shall be provided in combustible nonmetallic exhaust ducts where the largest cross-sectional diameter of the duct is equal to or greater than 10 in. (255 mm), or the cross-sectional cylindrical or rectangular area is greater than or equal to 80 in.^{2} (516 cm^2).

(A) Ducts that are listed or approved for applications without automatic fire sprinkler system protection shall not be required to comply with 34.3.7.3.8.3.

(B) Ducts that are not more than 12 ft (3660 mm) in length and installed below ceiling level shall not be required to comply with 34.3.7.3.8.3.

34.3.7.3.8.4* Automatic Sprinkler Locations.

(A) Sprinklers system shall be installed at 12 ft (3660 mm) intervals in horizontal ducts and at changes in direction.

(B) In vertical ducts, sprinklers shall be installed at the top and at alternate floor levels.

Chapter 35 Structural Design

35.1 General.

35.1.1 Scope. The provisions of this chapter shall govern the structural design of buildings, structures, and portions thereof regulated by this *Code*.

35.1.2* Structural Design. Buildings, structures, and portions thereof shall be designed and constructed to support, within the limitations specified in this *Code*, all loads set forth in this chapter and elsewhere in this *Code* and combined in accordance with Section 35.15.

35.1.2.1 Design Methods. Design shall be in accordance with strength design, load and resistance factor design, or allowable stress design methods, as permitted by the applicable material chapters.

35.1.2.2 Basic Requirements. The basic requirements of strength, serviceability, self-straining forces, and analysis shall be in accordance with Section 1.3 of ASCE/SEI 7, *Minimum Design Loads for Buildings and Other Structures*.

35.1.2.3 One- and Two-Family Dwellings. One- and two-family dwellings shall be permitted to be designed and constructed in accordance with the following reference documents, subject to the limitations therein:

(1) PCA EB118, *Prescriptive Method for Insulating Concrete Forms in Residential Construction*
(2) ACI 530/ASCE 5/TMS 402, *Building Code Requirements for Masonry Structures*, Chapter 5
(3) AISI-Prescriptive, *Standard for Cold-Formed Steel Framing — Prescriptive Method for One and Two Family Dwellings*
(4) ANSI/AF&PA WFCM, *Wood Frame Construction Manual for One- and Two- Family Dwellings*
(5) SSTD-10, *Standard for Hurricane Resistant Construction*
(6) IRC, *International Residential Code*, Chapter 2, Section R301, and Chapters 4 through 8

35.1.2.4 General Structural Integrity. The requirements for general structural integrity shall be in accordance with Section 1.4 of ASCE/SEI 7.

35.1.2.5 Load Path. Any method of construction to be used shall result in a system that provides an identified, continuous load path capable of transferring all loads from their point of origin through the load-resisting elements to the ultimate point of support.

35.1.2.6 In-Situ Load Tests.

35.1.2.6.1 The authority having jurisdiction shall be responsible for authorizing an engineering analysis or a load test, or both, of any construction whenever there is reason to question the safety of the construction for the intended occupancy.

35.1.2.6.2 Engineering analysis and load tests shall be conducted in accordance with the responsible registered design professional's (RDP's) quality assurance program as required in Chapter 40.

35.1.2.7 Preconstruction Load Tests. Materials and methods of construction that are not capable of being designed by approved engineering analysis or that do not comply with the applicable material design standard, or alternative test procedures in accordance with the responsible registered design professional's (RDP's) quality assurance program as required in Chapter 40, shall be load tested in accordance with the responsible registered design professional's (RDP's) quality assurance program as required in Chapter 40.

35.1.2.8 Deflections.

35.1.2.8.1 General.

35.1.2.8.1.1 The deflection limits of structural members shall not exceed the more restrictive of the limits specified in Table 35.1.2.8.1.1 or in 35.1.2.8.2 through 35.1.2.8.8.

35.1.2.8.1.2 Drift limits applicable to earthquake loading shall be in accordance with Section 12.12 of ASCE/SEI 7.

35.1.2.8.2 Reinforced Concrete. The deflection of reinforced concrete structural members shall not exceed that permitted by ACI 318, *Building Code Requirements for Structural Concrete.*

35.1.2.8.3 Steel. The deflection of steel structural members shall not exceed that permitted by the following, as applicable:

(1) AISC 360, *Specification for Structural Steel Buildings*
(2) AISI—General, *Standard for Cold-Formed Steel Framing—General Provisions*
(3) ASCE/SEI 3, *Standard for the Structural Design of Composite Slabs*
(4) ASCE/SEI 8, *Standard Specification for the Design of Cold-Formed Stainless Steel Structural Members*
(5) SJI, *Standard Specifications, Load Tables and Weight Tables for Steel Joists and Joist Girders*

35.1.2.8.4 Masonry. The deflection of masonry structural members shall not exceed that permitted by ACI 530/ASCE 5/TMS 402.

Copyright National Fire Protection Association
Provided by IHS under license with NFPA
No reproduction or networking permitted without license from IHS
Not for Resale

Table 35.1.2.8.1.1 Deflection Limits

Load Case	Deflection Limit[a]		
	L	***S* or *W*[b]**	***D* + *L***
Roof Members			
Supporting plaster ceiling	*l*/360	*l*/360	*l*/240
Supporting nonplaster ceiling	*l*/240	*l*/240	*l*/180
Not supporting ceiling	*l*/180	*l*/180	*l*/120
Floor Members	*l*/360	—	*l*/240
Exterior Walls			
With brittle finishes	—	*l*/240	—
With flexible finishes	—	*l*/120	—
Interior Walls and Partitions[c]			
With brittle finishes	*l*/240	—	—
With flexible finishes	*l*/120	—	—
Farm Buildings	—	—	*l*/180
Greenhouses	—	—	*l*/120

For SI units, 1 in. = 25.4 mm.

L: Live load. *S*: Snow load. *W*: Wind load. *D*: Dead load. *l*: Span length in in.

[a] For structural roofing and siding made of formed metal sheets, the total load deflection is not to exceed *l*/60. For secondary structural members to which formed metal roofing or siding is attached, the live load deflection is not to exceed *l*/150 for roofs and *l*/90 for walls. For roofs, this exception applies only when the metal sheets have no roof covering.

[b] The wind load is permitted to be taken as 7/10 of the components and cladding load for the purpose of the deflection limits herein.

[c] Horizontal loads to be applied to interior partitions are determined in accordance with 35.6.9.

35.1.2.8.5 Aluminum. The deflection of aluminum structural members shall not exceed that permitted by Aluminum Design Manual: Part 1-A, *Aluminum Structures, Allowable Stress Design*, and Part 1-B, *Aluminum Structures, Load and Resistance Factor Design of Buildings and Similar Type Structures.*

35.1.2.8.6 Glazing. Glazing supports shall comply with Section 46.9.

35.1.2.8.7 Wood. The deflection of wood structural members shall not exceed that permitted by ANSI/AF&PA NDS, *National Design Specifications (NDS) for Wood Construction*, the AF&PA NDS Supplement, *NDS Supplement—Design Values for Wood Construction*, and AF&PA SDPWS, *Special Design Provisions for Wind and Seismic.*

35.1.2.8.8* Roof Deflection. All roofs shall be designed with a slope or camber to allow drainage after the dead load deflection due to initial set and long-time deformation has taken place, except that roof construction shall be permitted to be level if the dead load deflection pockets due to initial set and long-time deformation meet the following criteria:

(1) They are not over ½ in. (13 mm) deep below the drainage invert.
(2) They deflect not more than ½ in. (13 mm), at any point, for a 5 psf (0.24 kN/m^2) live load on all or alternate spans.
(3) Cantilever members drained at the unsupported end are not required to meet the deflection requirements.
(4) Roofs with a slope of less than ¼ in./ft (6.3 mm/305 mm) are required to be designed to prevent instability from ponding loads.

35.2 Special Definitions. A list of special terms used in this chapter, which are extracted from ASCE/SEI 7 and are reprinted with permission of ASCE, follows. *(See flood-related definitions in Section 39.2.)*

35.2.1 Addition. An increase in building area, aggregate floor area, height, or number of stories of a structure. **[ASCE/SEI 7:**11.2]

35.2.2 Allowable Stress Design. A method of proportioning structural members such that elastically computed stresses produced in the members by nominal loads do not exceed specified allowable stresses (also called working stress design). **[ASCE/SEI 7:**1.2]

35.2.3 Balcony (Exterior). An exterior floor projecting from, and supported by, a structure without additional independent supports.

35.2.4 Basic Wind Speed (*V*). Three-second gust speed at 33 ft (10 m) above the ground in Exposure C *(see ASCE/SEI 7, Section 6.5.6.3)* as determined in accordance with ASCE/SEI 7, Section 6.5.4. **[ASCE/SEI 7:**6.2]

35.2.5 Buildings. Structures, usually enclosed by walls and a roof, constructed to provide support or shelter for an intended occupancy. **[ASCE/SEI 7:**1.2]

35.2.6 Component. A part or element of an architectural, electrical, mechanical, or structural system. **[ASCE/SEI 7:**11.2]

35.2.7 Components and Cladding. Elements of the building envelope that do not qualify as part of the main wind-force resisting system. **[ASCE/SEI 7:**6.2]

35.2.8 Concrete.

35.2.8.1 Plain Concrete. Concrete that either is unreinforced or contains less reinforcement than the minimum amount specified in ACI 318 for reinforced concrete. **[ASCE/SEI 7:**11.2]

35.2.8.2 Reinforced Concrete. Concrete reinforced with no less than the minimum amount required by ACI 318, prestressed or nonprestressed, and designed on the assumption that the two materials act together in resisting forces. **[ASCE/SEI 7:**11.2]

35.2.9 Deck. An exterior floor supported on at least two opposing sides by an adjacent structure and/or posts, piers, or other independent supports.

35.2.10 Design Earthquake. The earthquake effects that are two-thirds of the corresponding maximum considered earthquake. **[ASCE 7:**11.2]

35.2.11 Design Pressure (*p*). Equivalent static pressure to be used in the determination of wind loads for buildings. **[ASCE/SEI 7:**6.2]

--`,,```,,,,````-`-`,,`,,`,`,,`---

Copyright National Fire Protection Association
Provided by IHS under license with NFPA
No reproduction or networking permitted without license from IHS
Not for Resale

35.2.12 Design Strength. The product of the nominal strength and a resistance factor, Φ. **[ASCE/SEI 7:**1.2]

35.2.13 Facilities.

35.2.13.1 Essential Facilities. Buildings and other structures that are intended to remain operational in the event of extreme environmental loading from wind, snow, or earthquakes. **[ASCE/SEI 7:**1.2]

35.2.13.2 Temporary Facilities. Buildings or other structures that are to be in service for a limited time and have a limited exposure period for environmental loadings. **[ASCE/SEI 7:**1.2]

35.2.14 Factored Load. The product of the nominal load and a load factor. **[ASCE/SEI 7:**1.2]

35.2.15 Glazing. Glass or transparent or translucent plastic sheet used in windows, doors, skylights, or curtain walls. **[ASCE/SEI 7:**6.2]

35.2.16 Importance Factor (*I*). A factor that accounts for the degree of hazard to human life and damage to property. **[ASCE/SEI 7:**6.2]

35.2.17 Limit State. A condition beyond which a structure or member becomes unfit for service and is judged either to be no longer useful for its intended function (serviceability limit state) or to be unsafe (strength limit state). **[ASCE/SEI 7:**1.2]

35.2.18 Load Effects. Forces and deformations produced in structural members by the applied loads. **[ASCE/SEI 7:**1.2]

35.2.19 Load Factor. A factor that accounts for deviations of the actual load from the nominal load, for uncertainties in the analysis that transforms the load into a load effect, and for the probability that more than one extreme load will occur simultaneously. **[ASCE/SEI 7:**1.2]

35.2.20 Loads. Forces or other actions that result from the weight of all building materials, occupants and their possessions, environmental effects, differential movement, and restrained dimensional changes. Permanent loads are those loads in which variations over time are rare or of small magnitude. All other loads are variable loads. *(See also 3.3.360, Nominal Loads.)* **[ASCE/SEI 7:**1.2]

35.2.20.1 Dead Loads. Dead loads consist of the weight of all materials of construction incorporated into the building including but not limited to walls, floors, roofs, ceilings, stairways, built-in partitions, finishes, cladding and other similarly incorporated architectural and structural items, and fixed service equipment including the weight of cranes. **[ASCE/SEI 7:**3.1]

35.2.20.2 Live Loads. Live loads are those loads produced by the use and occupancy of the building or other structure and do not include construction or environmental loads such as wind load, snow load, rain load, earthquake load, flood load, or dead load. Live loads on a roof are those produced (1) during maintenance by workers, equipment, and materials; and (2) during the life of the structure by movable objects such as planters and by people. **[ASCE/SEI 7:**4.1]

35.2.20.3 Nominal Loads. The magnitudes of the loads specified in ASCE/SEI 7 (dead, live, soil, wind, snow, rain, flood and earthquake). **[ASCE/SEI 7:**1.2]

35.2.21 Maximum Considered Earthquake Ground Motion. The most severe earthquake effects considered by this *Code* as defined in ASCE/SEI 7, Section 11.4. **[ASCE/SEI 7:**11.2]

35.2.22 Occupancy. The purpose for which a building or other structure, or part thereof, is used or intended to be used. **[ASCE/SEI 7:**1.2]

35.2.23 Occupancy Importance Factor (*I*). A factor assigned to each structure according to its Occupancy Category as prescribed in Table 35.3.1 and ASCE/SEI 7, Table 1-1.

35.2.24 Openings. Apertures or holes in the building envelope that allow air to flow through the building envelope and which are designed as "open" during design winds as defined by ASCE/SEI 7. **[ASCE/SEI 7:**6.2]

35.2.25 Partition. A nonstructural interior wall that spans horizontally or vertically from support to support. The supports may be the basic building frame, subsidiary structural members, or other portions of the partition system. **[ASCE/SEI 7:**11.2]

35.2.26 Resistance Factor. A factor that accounts for deviations of the actual strength from the nominal strength and the manner and consequences of failure *(also called strength reduction factor).* **[ASCE/SEI 7:**1.2]

35.2.27 Seismic Design Category. A classification assigned to a structure based on its Occupancy Category and the severity of the design earthquake ground motion at the site as defined in ASCE/SEI 7, Section 11.4. **[ASCE/SEI 7:**11.2]

35.2.28 Seismic Forces. The assumed forces prescribed herein, related to the response of the structure to earthquake motions, to be used in the design of the structure and its components. **[ASCE/SEI 7:**11.2]

35.2.29 Site Class. A classification assigned to a site based on the types of soils present and their engineering properties as defined in ASCE/SEI 7, Section 20. **[ASCE/SEI 7:**11.2]

35.2.30 Strength.

35.2.30.1 Nominal Strength. (1) In general, the capacity of a structure or member to resist the effects of loads, as determined by computations using specified material strengths and dimensions and formulas derived from accepted principles of structural mechanics or by field tests or laboratory tests of scaled models, allowing for modeling effects and differences between laboratory and field conditions. (2) For the purposes of earthquake loading, strength of a member or cross section calculated in accordance with the requirements and assumptions of the strength design methods of ASCE/SEI 7 (or the referenced standards) before application of any strength reduction factors. **[ASCE/SEI 7:**1.2, 11.2]

35.2.30.2 Required Strength. Strength of a member, cross section, or connection required to resist factored loads or related internal moments and forces in such combinations as stipulated by ASCE/SEI 7. **[ASCE/SEI 7:**11.2]

35.2.31 Strength Design. A method of proportioning structural members such that the computed forces produced in the members by the factored loads do not exceed the member design strength (*also called load and resistance factor design*). **[ASCE/SEI 7:**1.2]

35.2.32 Structure. That which is built or constructed and limited to buildings and nonbuilding structures as defined herein. **[ASCE/SEI 7:**11.2]

35.2.32.1 Other Structures. Structures, other than buildings, for which loads are specified in ASCE/SEI 7. **[ASCE/SEI 7:**1.2]

--`,,```,,,,````-`-`,,`,,`,`,,`---

Copyright National Fire Protection Association
Provided by IHS under license with NFPA
No reproduction or networking permitted without license from IHS

Not for Resale

35.2.33 Wall. A component that has a slope of 60 degrees or greater with the horizontal plane used to enclose or divide space. **[ASCE/SEI 7:**11.2]

35.2.33.1 Bearing Wall. Any wall meeting either of the following classifications: (1) Any metal or wood stud wall that supports more than 100 lb/linear ft (1400 N/linear m) of vertical load in addition to its own weight or (2) any concrete or masonry wall that supports more than 200 lb/linear ft (2900 N/linear m) of vertical load in addition to its own weight. **[ASCE/SEI 7:**11.2]

35.2.33.2 Bearing Wall System. A structural system with bearing walls providing support for all or major portions of the vertical loads. Shear walls or braced frames provide seismic force resistance. **[ASCE/SEI 7:**11.2]

35.2.33.3 Cripple Wall. Short stud wall, less than 8 ft (2400 mm) in height, between the foundation and the lowest framed floors with studs not less than 14 in. (355 mm) long — also known as a knee wall. Cripple walls can occur in both engineered structures and conventional construction. **[ASCE/SEI 7:**11.2]

35.2.33.4 Light-Framed Wall. A wall with wood or steel studs. **[ASCE/SEI 7:**11.2]

35.2.33.5 Light-Framed Wood Shear Wall. A wall constructed with wood studs and sheathed with material rated for shear resistance. **[ASCE/SEI 7:**11.2]

35.2.33.6 Nonbearing Wall. Any wall that is not a bearing wall. **[ASCE/SEI 7:**11.2]

35.2.33.7 Nonstructural Wall. All walls other than bearing walls or shear walls. **[ASCE/SEI 7:**11.2]

35.2.33.8 Shear Wall. A wall, bearing or nonbearing, designed to resist lateral seismic forces acting in the plane of the wall (sometimes referred to as a vertical diaphram). **[ASCE/SEI 7:**11.2]

35.3 Occupancy Category.

35.3.1 General. For the purposes of determining the loads for use in the structural design thereof, all buildings and other structures shall be assigned an occupancy category in accordance with Table 35.3.1.

35.3.2 Multiple Use. Where a structure is occupied for two or more occupancies not included in the same occupancy category, the structure shall be assigned the classification of the highest occupancy category corresponding to the various occupancies. Where structures have two or more portions that are structurally separated in accordance with Section 12.12.3 of ASCE/SEI 7, each portion shall be separately classified. Where a structurally separated portion of a structure provides required access to, required egress from or shares life safety components with another portion having a higher occupancy category, both portions shall be assigned the higher occupancy category.

35.4 Construction Documents.

35.4.1 General. Construction documents shall show the size, section, and relative locations of all structural members with floor levels, column centers, and all offsets fully dimensioned.

35.4.2 Structural Design Information Required. The design loads and other information related to the structural design required by 35.4.2.1 through 35.4.2.6 shall be indicated on the construction documents for all parts of the building or structure.

35.4.2.1 Floor Live Load.

35.4.2.1.1 The uniformly distributed, concentrated, and impact floor live load utilized in the design shall be indicated for all floor areas. *(See Section 35.6.)*

35.4.2.1.2 Live load reduction of the uniformly distributed floor live loads *(see 35.6.7)*, if utilized in the design, shall be indicated.

35.4.2.2 Roof Live Load. The roof live load utilized in the design shall be indicated for all roof areas. *(See Section 35.7.)*

35.4.2.3 Snow Load.

35.4.2.3.1 The ground snow load (p_g) shall be indicated. *(See Section 35.8.)*

35.4.2.3.2 In areas where the ground snow load (p_g) exceeds 10 psf (0.48 kN/m^2), the following additional information shall also be provided, regardless of whether snow loads govern the design of the roof:

(1) Flat-roof snow load (p_f)
(2) Snow exposure factor (C_e)
(3) Snow load importance factor (I) and occupancy category
(4) Thermal factor (C_t)

35.4.2.4 Wind Load. The following information related to wind loads shall be shown *(see Section 35.9)*, regardless of whether wind loads govern the lateral design of the building:

(1) Basic wind speed (mph)
(2) Wind importance factor (I) and occupancy category
(3) Wind exposure—with wind exposure and applicable wind direction indicated if more than one wind exposure is utilized
(4) Building classification as enclosed, partially enclosed, or open, and protection of openings when required
(5) Topographic factor (K_{zt})
(6) Wind design pressure (p) to be used for the design of exterior components and cladding not specifically designed by the responsible registered design professional—with p for each exposure indicated if more than one exposure is utilized

35.4.2.5 Earthquake Design Data. The following information related to seismic design shall be shown *(see Section 35.10)*, regardless of whether seismic loads govern the lateral design of the building:

(1) Mapped maximum considered earthquake spectral response acceleration at short periods (S_s) and at a period of 1 second (S_1)
(2) Site class
(3) Design earthquake spectral response acceleration at short periods (S_{DS}) and at a period of 1 second (S_{D1})
(4) Occupancy category
(5) Seismic importance factor (I)
(6) Seismic design category
(7) Basic seismic force–resisting system
(8) Analysis procedure

35.4.2.6 Other Loads.

35.4.2.6.1 Special Loads. Special loads that are applicable to the design of the building, structure, or portions thereof shall be indicated.

Copyright National Fire Protection Association
Provided by IHS under license with NFPA
No reproduction or networking permitted without license from IHS
Not for Resale

Table 35.3.1 Occupancy Category of Buildings and Other Structures for Wind, Snow, and Earthquake

Nature of Occupancy	Occupancy Category
A. Buildings and other structures that represent a low hazard to human life in the event of failure including, but not limited to, the following: (1) Agricultural facilities (2) Certain temporary facilities (3) Minor storage facilities	I
B. All buildings and other structures, except those listed in Occupancy Categories I, III, and IV	II
C. Buildings and other structures that represent a substantial hazard to human life in the event of failure including, but not limited to, the following: (1) Buildings and other structures where more than 300 people congregate in one area (2) Buildings and other structures with day-care facilities with a capacity greater than 150 (3) Buildings and other structures with elementary school or secondary school with a capacity greater than 250 (4) Buildings and other structures with a capacity greater than 500 for colleges or adult education facilities (5) Health care facilities with a capacity of 50 or more resident patients but that do not have surgery or emergency treatment facilities (6) Jails and detention facilities	III
D. Buildings and other structures, not included in Occupancy Category IV, with potential to cause a substantial economic impact and/or mass disruption of day-to-day civilian life in the event of failure including, but not limited to, the following: (1) Power generating stations* (2) Water treatment facilities (3) Sewage treatment facilities (4) Telecommunication centers	
E. Buildings containing toxic gases that are required to comply with Protection Level 4 or Protection Level 5 in accordance with Chapter 34.	
F. Buildings and other structures designated as essential facilities including, but not limited to, the following: (1) Hospitals and other health care facilities having surgery or emergency treatment facilities (2) Fire, rescue, and police stations and emergency vehicle garages (3) Designated earthquake, hurricane, or other emergency shelters (4) Designated emergency preparedness, communications, and operations centers and other facilities required for emergency response (5) Power-generating stations and other public utility facilities required in an emergency (6) Ancillary structures (including, but not limited to, communications towers, fuel storage tanks, cooling towers, electrical substation structures, fire water storage tanks, or other structures housing or supporting water or other fire suppression material or equipment) required for operation of Occupancy Category IV structures during an emergency (7) Aviation control towers, air-traffic control centers, and emergency aircraft hangars (8) Water storage facilities and pump structures required to maintain water pressure for fire suppression (9) Buildings and other structures having critical national defense functions	IV
G. Buildings containing highly toxic gases that are required to comply with Protection Level 4 or Protection Level 5 in accordance with Chapter 34, and buildings containing materials that are capable of detonation or deflagration that are required to comply with Protection Level 1 or Protection Level 5 in accordance with Chapter 34.	

*Cogeneration power plants that do not supply power on the national grid shall be designated Occupancy Category II.

Source: [ASCE/SEI 7: Table 1-1]

--`,,```,,,,````-`-`,,`,,`,`,,`---

Copyright National Fire Protection Association
Provided by IHS under license with NFPA
No reproduction or networking permitted without license from IHS Not for Resale

35.4.2.6.2 Flood Loads. For buildings and structures located wholly or partly within the flood hazard area established in 39.4.2, the following information related to flood loads shall be shown, regardless of whether flood loads govern the design of the foundation or building:

(1) Flood hazard zone(s) and boundaries, as shown on the flood hazard map
(2) Design flood elevation (DFE)
(3) For buildings or structures located wholly or partly within areas subject to high-velocity wave action (V zones), the elevation of the bottom of the lowest horizontal structural member of the lowest floor, excluding piles and columns
(4) For buildings or structures located entirely within flood hazard areas not subject to high-velocity wave action, the elevation of the top of the lowest floor
(5) Predevelopment and proposed post-construction ground elevations adjacent to the building or structure
(6) Dimensions and locations of flood openings, as permitted by 39.12.3.1.1
(7) For floodproofed areas below the DFE, as permitted by 39.12.3.1.2, the following information:
    (a) Elevation to which the building or structure is floodproofed
    (b) Description of floodproofing techniques
    (c) Lateral and buoyant flood loads during the design flood
(8) For breakaway walls, as permitted by 39.12.3.2.2, the following information:
    (a) Description of breakaway wall construction and the attachment to the foundation
    (b) Flood loads against the breakaway wall during the base flood
    (c) Load to which the breakaway wall and its attachment, or both, are designed to fail

35.5 Dead Loads.

35.5.1 Weights of Materials and Construction. In determining dead loads for the purposes of design, the actual weights of materials and constructions shall be used, provided that, in the absence of definite information, values approved by the authority having jurisdiction shall be used.

35.5.2 Weights of Fixed Service Equipment. In determining dead loads for the purpose of design, the weight of fixed service equipment, such as plumbing stacks and risers; electrical feeders; and heating, ventilating, and air-conditioning systems, shall be included.

35.5.3 Permanent Partition Loads. The actual weight of all permanent partitions shall be included in the dead load for the purposes of structural design. *(See also 35.6.2.3.1.)*

35.6 Live Loads.

35.6.1 General.

35.6.1.1 The live loads assumed for the purposes of design shall be the greatest loads produced by the intended uses and occupancies but shall be not less than the loads required by Section 35.6.

35.6.1.2* Floors and other structural elements of buildings in the locations specified in Table 4-1 of ASCE/SEI 7 shall be designed to support the uniformly distributed live loads prescribed in 35.6.2 or the minimum concentrated loads prescribed in 35.6.3, whichever produces the greater stresses.

35.6.1.3 The authority having jurisdiction shall approve the required live load for any occupancy not specifically provided for in Section 35.6.

35.6.1.4 Where structural members are arranged so as to create continuity, members shall be designed using the loading conditions that would cause maximum shear and bending moments.

35.6.1.4.1 Where uniform floor loads are involved, loading distribution shall be permitted to be limited to full dead load on all spans in combination with full live load (or reduced live load, if permitted by 35.6.7) on adjacent spans and alternate spans.

35.6.1.4.2 For roof loads, the requirement of 35.6.1.4 shall be satisfied in accordance with 35.7.1.2.

35.6.2 Uniform Live Loads.

35.6.2.1 The minimum, uniformly distributed live load in pounds per square foot shall be as set forth in Table 4-1 of ASCE/SEI 7.

35.6.2.2 The live loads in Table 4-1 of ASCE/SEI 7 shall be the minimum loads to be used for the occupancies listed.

35.6.2.3 Where the building will be subjected to greater live loads than those specified in Table 4-1 of ASCE/SEI 7, such loads shall be utilized for design including, but not limited to, the requirements in 35.6.2.3.1 through 35.6.2.3.3.

35.6.2.3.1 Partitions shall meet the requirements of 35.6.2.3.1.1 and 35.6.2.3.1.2.

35.6.2.3.1.1 In office buildings or other buildings where partitions will be erected or rearranged, provision for partition weight shall be made, regardless of whether partitions are shown on the plans. Partition load shall be not less than 15 psf (0.72 kN/m^2).

35.6.2.3.1.2 The requirement of 35.6.2.3.1.1 shall not apply where the specified live load exceeds 80 psf (3.83 kN/m^2).

35.6.2.3.2 Footboards in reviewing stands, grandstands, and bleachers shall be designed to resist 120 lb/linear ft (180 kg/linear m).

35.6.2.3.3 Reviewing stands, grandstands, bleachers, and supporting structures shall meet the requirements of 35.6.2.3.3.1 and 35.6.2.3.3.2.

35.6.2.3.3.1 Reviewing stands, grandstands, bleachers, and supporting structures shall be designed to resist a horizontal swaying force applied to the seats as follows:

(1) In a direction parallel to the length of the seats, 24 lb/linear ft (36 kg/linear m) of seats
(2) In a direction perpendicular to the length of the seats, 10 lb/linear ft (15 kg/linear m) of seats

35.6.2.3.3.2 Sway loads shall not be required to be applied in both directions simultaneously.

35.6.3 Concentrated Loads.

35.6.3.1 Provision shall be made in designing floors and other structural elements of buildings for a concentrated load as set forth in Table 4-1 of ASCE/SEI 7.

35.6.3.2 Unless otherwise specified in 35.6.3.3, the indicated concentrated load shall be assumed to occupy an area of 2.5 ft^2 (0.23 m^2) and shall be so located as to produce the maximum stress conditions in the structural members.

Copyright National Fire Protection Association
Provided by IHS under license with NFPA
No reproduction or networking permitted without license from IHS
Not for Resale

35.6.3.3 Stage floors shall meet the following requirements:

(1) Stage floors shall be designed to support not less than a 2000 lb (8.9 kN) concentrated load on a 1 ft^2 (0.09 m^2) area at any point.
(2) The concentrated load specified in 37.6.3.3(1) shall not be required to be applied simultaneously with the required uniform load.

35.6.4 Live Loads for Areas Subject to Truck, Bus, and Emergency Vehicle Traffics.

35.6.4.1 Minimum live loads for areas subject to truck, bus, and emergency vehicle traffic shall be as specified in Table 35.6.4.1 but shall be not less than 50 psf (2.4 kN/m^2).

Table 35.6.4.1 Uniform and Concentrated Loads

Loading Class*	Uniform Load [lb/linear ft of lane (kN/linear m of lane)]	Concentrated Load† [lb (kN)]	
		For Moment Design	For Shear Design
H20-44 and HS20-44	640 (9.3)	18,000 (80)	26,000 (115)
H15-44 and HS15-44	480 (7.0)	13,500 (60)	19,500 (87)

*An H loading class designates a two-axle truck with a semitrailer. An HS loading class designates a tractor truck with a semitrailer. The numbers following the letter classification indicate the gross weight, in tons, of the standard truck and the year the loadings were instituted.
†See 35.6.4.2 for the loading of multiple spans.

35.6.4.2 The concentrated load and uniform load shall be uniformly distributed over a 10 ft (3050 mm) width on a line normal to the centerline of the lane placed within a lane 12 ft (3660 mm) in width.

35.6.4.2.1 The loads shall be placed within their individual lanes so as to produce the maximum stress in each structural member.

35.6.4.2.2 Single spans shall be designed for the uniform load in Table 35.6.4.1, and one simultaneous concentrated load shall be positioned to produce the maximum effect.

35.6.4.2.3 Multiple spans shall be designed for the uniform load in Table 35.6.4.1 on the spans, and two simultaneous concentrated loads in two spans shall be positioned to produce the maximum negative moment effect.

35.6.4.2.4 Multiple span design loads, for other effects, shall be the same as for single spans.

35.6.5 Handrails, Guards, Grab Bars, and Vehicle Barriers.

35.6.5.1 All required handrails, guards, grab bars, and vehicle barriers shall be designed and constructed to the structural loading conditions in Section 4.4 of ASCE/SEI 7.

35.6.5.2 For guards in industrial and storage occupancy classifications, in areas that are not accessible to the general public and that have an occupant load not greater than 50, guards shall be permitted to be designed for the same loads as for one- and two-family dwellings.

35.6.6* Impact Loads. Provisions for the live loads specified in 35.6.2 shall be made in the structural design for occupancies and loads that involve vibration and impact forces, as required in Section 4.7 of ASCE/SEI 7.

35.6.7 Reduction in Live Loads.

35.6.7.1 Reductions in the minimum required design live load, except for roof uniform live loads, shall be permitted in accordance with Section 4.8 of ASCE/SEI 7.

35.6.7.2 Reductions in the minimum design roof uniform live loads shall be permitted in accordance with Section 4.9 of ASCE/SEI 7.

35.6.8 Crane Loads. All craneways and supporting construction shall be designed and constructed to comply with Section 4.10 in ASCE/SEI 7.

35.6.9 Interior Walls and Partitions.

35.6.9.1 Interior walls and partitions, including their finish materials, shall have the strength to resist a horizontal load of not less than 5 psf (0.24 kN/m^2).

35.6.9.2 The provisions of 35.6.9.1 shall not apply to flexible, folding, and portable partitions under 6 ft (1830 mm) in height.

35.7 Roof Loads.

35.7.1 General. The structural supports of roofs and marquees shall be designed to resist wind loads and, where applicable, snow loads and earthquake loads, in addition to the dead load of construction and the appropriate live loads as prescribed in Section 35.7.

35.7.1.1 The roof live loads shall be assumed to act vertically on the area projected on a horizontal plane.

35.7.1.2 Distributions of roof live loads shall be in accordance with 35.7.1.2.1 and 35.7.1.2.2.

35.7.1.2.1 Where uniform roof live loads are involved in the design of structural members arranged so as to create continuity, the loading distribution shall be permitted to be limited to full dead loads on all spans in combination with full roof live loads on adjacent spans and on alternate spans.

35.7.1.2.2 Distribution of snow loads on continuous span members shall be in accordance with Section 35.8.

35.7.2 Minimum Roof Live Loads. Ordinary roofs, either flat, pitched, or curved, shall be designed for the live loads as specified in Table 4.1 of ASCE/SEI 7.

35.7.3 Rain Loads. Rain loads, where utilized in the combination of loads specified in Section 35.15, shall be calculated in accordance with Section 8 of ASCE/SEI 7.

35.7.3.1 For roofs with a slope less than ¼ unit vertical in 12 units horizontal (¼:12), the design calculations shall include verification of the prevention of ponding instability in accordance with Section 8.4 of ASCE/SEI 7.

35.7.3.2 Roofs with provisions for controlled drainage shall be designed in accordance with Section 8.5 of ASCE/SEI 7.

35.7.3.3 Rain loading shall also comply with Section 38.6.

35.7.4 Special-Purpose Roofs. Where occupied for incidental promenade purposes, roofs shall be designed for a minimum live load of 60 psf (2.87 kN/m^2) and 100 psf (4.79 kN/m^2) where designed for roof gardens or assembly or educational

Copyright National Fire Protection Association
Provided by IHS under license with NFPA
No reproduction or networking permitted without license from IHS
Not for Resale

occupancies. Roofs that have occupancy functions such as roof gardens, assembly occupancies, or other special purposes shall be permitted to have their uniformly distributed live load reduced in accordance with the requirements of Section 4.8 of ASCE/SEI 7.

35.7.4.1 Landscaped roofs shall meet the requirements of 35.7.4.1.1 and 35.7.4.1.2.

35.7.4.1.1 Where roofs are to be landscaped, the uniform design live load in the landscaped area shall be 20 psf (0.96 kN/m^2).

35.7.4.1.2 The weight of the landscaping materials shall be considered as dead load and shall be computed on the basis of saturation of the soil.

35.7.4.2 Where awnings and canopies are covered with a fabric material and are supported by a lightweight, rigid, skeleton structure, such awnings and canopies shall be designed for a nonreducible uniform live load of 5 psf (0.24 kN/m^2), as well as for snow loads and wind loads as specified in Sections 35.8 and 35.9.

35.7.4.3 Roofs to be utilized for other special purposes shall be designed for all loads as necessary for the intended use, or as otherwise approved.

35.8 Snow Loads.

35.8.1 General.

35.8.1.1 All buildings and other structures shall be designed to resist the design snow loads.

35.8.1.2 Design snow loads shall be determined in accordance with Section 7 of ASCE/SEI 7, but the design roof load shall be not less than that determined by Section 35.7.

35.8.2* Ground Snow Loads. The ground snow loads used in calculating the design snow loads for roofs shall be determined in accordance with Section 7.2 of ASCE/SEI 7.

35.9 Wind Loads.

35.9.1 General.

35.9.1.1 All buildings, structures, and parts thereof shall be designed to withstand the appropriate wind loads prescribed herein.

35.9.1.2 Decreases in wind loads shall not be permitted to be made to account for the effect of shielding by other structures.

35.9.1.3 Determination of wind loads shall be in accordance with 35.9.1.3.1 and 35.9.1.3.2.

35.9.1.3.1 Wind loads on every building or structure shall be determined by the provisions of Section 6 of ASCE/SEI 7.

35.9.1.3.2 As an alternative to the requirement of 35.9.1.3.1, wind loads determined by the following shall be permitted, subject to the limitations therein:

(1) ANSI/NAAMM FP 1001, *Guide Specifications for Design of Metal Flagpoles Manual*
(2) Wind tunnel tests conducted in accordance with Section 6.6 of ASCE/SEI 7
(3) ANSI/TIA/EIA-222-F, *Structural Standards for Steel Antenna Towers and Antenna Structures*
(4) For bleachers and grandstands, in accordance with 35.9.1.5

35.9.1.4* For buildings or other structures sited such that they are subject to the channeling effects or buffeting in the wake of upwind obstructions, or for those buildings and other structures having unusual geometric shapes or response characteristics, wind loads shall be based on wind tunnel tests or nationally recognized data.

35.9.1.5 Grandstands and bleachers shall meet the requirements of 35.9.1.5.1 and 35.9.1.5.2.

35.9.1.5.1 Uplift wind pressures equal in magnitude to those determined by 35.9.1.3.1 shall be assumed to be acting vertically on the gross horizontal projection of the closed-deck grandstand, the understructure of which is unenclosed.

35.9.1.5.2 Uplift wind pressures equal to 60 percent of the values in 35.9.1.5.1 shall be assumed to be acting vertically on the gross horizontal projection of the closed-deck grandstand, the understructure of which is enclosed at the perimeter with solid walls.

35.9.2 Basic Wind Speed.

35.9.2.1 The basic wind speed used to calculate the wind loads shall be determined in accordance with Section 6.5.4 of ASCE/SEI 7.

35.9.2.2* Where referenced documents are based on fastest-mile wind speeds, the 3-second gust wind velocities of ASCE/SEI 7, Figure 6-1 shall be converted to fastest-mile wind velocities (V_{fm}) using Table 35.9.2.2 and the following equation:

$$V_{fm} = \frac{V_{3S} - 10.5}{1.05}$$

where:
V_{3S} = 3-second gust basic wind speed from Figure 6-1 of ASCE/SEI 7

35.9.3* Exposure Category. The appropriate wind exposure category shall be determined for each side of the building or structure consistent with the site terrain in accordance with Section 6.5.6 of ASCE/SEI 7.

35.9.4 Occupancy Category and Wind Importance Factor.

35.9.4.1 Buildings and other structures shall be assigned an occupancy category in accordance with Table 35.3.1 to determine the wind load importance factor.

Table 35.9.2.2 Wind Speed Conversion Table

3-Second Gust		Fastest Mile	
mi/hr	**m/s**	**mi/hr**	**m/s**
85	38	71	32
90	40	76	34
100	45	85	38
105	47	90	40
110	49	95	43
120	54	104	47
125	56	109	49
130	58	114	51
140	63	123	55
145	65	128	57
150	67	133	60
160	72	142	64
170	76	152	68

Copyright National Fire Protection Association
Provided by IHS under license with NFPA
No reproduction or networking permitted without license from IHS
Not for Resale

35.9.4.2* Buildings and other structures shall be assigned a wind load importance factor (I) in accordance with Section 6.5.5 of ASCE/SEI 7.

35.10 Earthquake Loads.

35.10.1 General. All structures and nonstructural components, and portions thereof, shall be designed and constructed to resist the effects of earthquake motions as prescribed by Sections 11 through 23 of ASCE/SEI 7.

35.10.2* Importance Factor. Buildings and other structures shall be assigned a seismic importance factor (I) in accordance with Table 11.5-1 of ASCE/SEI 7.

35.10.3 Maximum Considered Earthquake Ground Motions. The maximum considered earthquake ground motions shall be as represented by the mapped spectral response acceleration at short periods (S_s) and at periods of 1 second (S_1) obtained from Figure 22-1 through Figure 22-14 of ASCE/SEI 7.

35.10.4 Site Class. A site class shall be determined in accordance with Chapter 20 of ASCE/SEI 7.

35.10.5 Design Earthquake Spectral Response Acceleration Parameters. Design earthquake spectral response acceleration parameters at short periods (S_{DS}) and at periods of 1 second (S_{D1}) shall be determined in accordance with Section 11.4.4 of ASCE/SEI 7.

35.10.6 Seismic Design Category. The seismic design category shall be determined in accordance with Section 11.6 of ASCE/SEI 7.

35.10.7 Seismic Force–Resisting System. The seismic force–resisting system used in the building or structure shall comply with Section 12.2.1 of ASCE/SEI 7.

35.10.8 Analysis Procedure. The analysis procedure used to evaluate the structure shall comply with Section 12.6 of ASCE/SEI 7.

35.10.9 Seismic Design of Steel Structures. The seismic design of steel structures shall be in accordance with the provisions of Chapter 44 of this *Code*. The provisions of Section 14.1 of ASCE/SEI 7 shall not apply.

35.11 Lateral Soil Loads. In the absence of a geotechnical soil analysis, soil loads in Table 35.11 shall be used as the minimum design lateral soil loads.

35.12* Flood Loads.

35.12.1 General. All buildings and other structures located in areas prone to flooding, as defined on the flood hazard map *(see Chapter 39)*, shall be designed, constructed, connected, and anchored to resist the loads from flooding associated with the design flood.

35.12.2 Design Flood Loads. Design flood loads shall be determined in accordance with Section 5.3 of ASCE/SEI 7.

35.12.3 Flood Hazard Areas. Buildings and structures located wholly or partly within flood hazard areas established by 39.4.2, including substantial improvements and restoration of substantial damage, shall be as follows:

Table 35.11 Soil Lateral Load

Description of Backfill Material[a]	Unified Soil Classification[a]	Design Lateral Soil Load[b] [psf/ft (kPa/m) of depth]
Well-graded, clean gravels; gravel–sand mixes	GW	30 (4.7)[c]
Poorly graded clean gravels; gravel–sand mixes	GP	30 (4.7)[c]
Silty gravels; poorly graded gravel–sand mixes	GM	40 (6.3)[c]
Clayey gravels; poorly graded gravel and clay mixes	GC	45 (7.1)[c]
Well-graded, clean sands; gravelly sand mixes	SW	30 (4.7)[c]
Poorly graded clean sands; sand–gravel mixes	SP	30 (4.7)[c]
Silty sands; poorly graded sand–silt mixes	SM	45 (7.1)[d]
Sand–silt clay mix with plastic fines	SM-SC	45 (7.1)[d]
Clayey sands; poorly graded sand–clay mixes	SC	60 (9.4)[d]
Inorganic silts and clayey silts	ML	45 (7.1)[d]
Mixture of inorganic silt and clay	ML-CL	60 (9.4)[d]
Inorganic clays of low to medium plasticity	CL	60 (9.4)[d]
Organic silts and silt clays, low plasticity	OL	Unsuitable as backfill material
Inorganic clayey silts, elastic silts	MH	Unsuitable as backfill material
Inorganic clays of high plasticity	CH	Unsuitable as backfill material
Organic clays and silty clays	OH	Unsuitable as backfill material

[a] The definition and classification of soil materials are to be in accordance with ASTM D 2487, *Standard Classification of Soils for Engineering Purposes (Unified Soil Classification System)*.

[b] Design lateral soil loads are given for moist conditions for the specified soils at their optimum densities. Actual field conditions govern. Submerged or saturated soil pressures include the weight of the buoyant soil plus the hydrostatic load.

[c] For relatively rigid walls, as when braced by floors, the design lateral soil load is to be increased for sand- and gravel-type soils to 60 psf/ft (9.4 kPa/m) of depth. Basement walls extending not more than 8 ft (2440 mm) below grade and supporting flexible floor systems are not considered as being relatively rigid walls.

[d] For relatively rigid walls, as when braced by floors, the design lateral soil load is to be increased for silt- and clay-type soils to 100 psf/ft (15.7 kPa/m) of depth.

Copyright National Fire Protection Association
Provided by IHS under license with NFPA
No reproduction or networking permitted without license from IHS
Not for Resale

(1) Such buildings and structures shall be designed, constructed, connected, and anchored to prevent flotation, collapse, or permanent lateral movement due to the action of loads during the design flood, including hydrostatic loads, buoyancy, hydrodynamic loads, impact loads, and associated wind loads.
(2) Tanks shall be designed and constructed to prevent flotation, collapse, and lateral movement when empty and shall not require anchorage.
(3) Such buildings and structures shall be designed and constructed in accordance with the requirements of Chapter 39.

35.13 Ice Loads — Atmospheric Icing Loads. Ice loads as a result of atmospheric icing shall be determined in accordance with Section 10 of ASCE/SEI 7.

35.14 Other Minimum Loads.

35.14.1 General. In addition to the other design loads specified in this chapter, buildings and other structures shall be designed to resist the loads specified in Section 35.14.

35.14.2 Hydrostatic Uplift.

35.14.2.1 All foundation slabs and other footings subjected to water pressure shall be designed to resist a uniformly distributed uplift equal to the full hydrostatic pressure.

35.14.2.2 The loads required by 35.14.2.1 shall be determined in accordance with Section 3.2.2 of ASCE/SEI 7.

35.14.3 Heliport and Helistop Landing Areas. In addition to the other design requirements of this chapter, heliport and helistop landing or touchdown areas shall be designed for the maximum stress induced by any of the following:

(1) Dead load of the heliport and helistop landing or touchdown areas plus actual gross weight of the helicopter plus snow load
(2) Dead load of the heliport and helistop landing or touchdown areas plus two, single, concentrated impact loads meeting all of the following criteria:
   (a) The impact loads shall be spaced a nominal 8 ft (2440 mm) apart, applied anywhere on the touchdown pad so as to represent each of the helicopter's two main landing gear, whether skid type or wheeled type.
   (b) Each impact load shall have a magnitude of three-quarters of the gross weight of the helicopter.
   (c) Both loads acting together shall have a magnitude of one and one-half times the gross weight of the helicopter.
(3) Dead load of the heliport and helistop landing or touchdown areas plus a uniform live load of 60 psf (2.87 kN/m^2)

35.15 Load Combinations.

35.15.1 All buildings and other structures shall be designed using the provisions of Section 2 of ASCE/SEI 7.

35.15.2 Either Section 2.3 or Section 2.4 of ASCE/SEI 7 shall be used exclusively for proportioning elements of a particular construction material throughout the structure.

35.16 Building Rehabilitation. Building rehabilitation shall be in accordance with Chapter 15.

Chapter 36 Soils, Foundations, and Retaining Walls

36.1 Scope. The requirements in this chapter shall establish minimum standards for the modification of soils and the design and construction of foundations and retaining walls.

36.1.1 In addition to the requirements of this chapter, structures assigned to Seismic Design Category C, Seismic Design Category D, Seismic Design Category E, and Seismic Design Category F shall comply with the applicable requirements in ASCE/SEI 7, *Minimum Design Loads for Buildings and Other Structures*.

36.1.2 The requirement of 36.1.1 shall not apply to detached one- and two-family dwellings in Seismic Design Category C.

36.2 Excavations.

36.2.1 Scope. The provisions of Section 36.2 shall apply to excavations for buildings and structures for which permits are issued by the authority having jurisdiction.

36.2.2 Protection of Excavations.

36.2.2.1 Until provisions for permanent supports have been made, excavations shall be guarded to prevent unauthorized personnel from entering and protected to prevent them from damaging property.

36.2.2.2 Excavations, other than minor excavations approved by the authority having jurisdiction, shall not extend within 12 in. (305 mm) of any plane projecting at an angle of 30 degrees from the horizontal from the bottom of a soil-bearing foundation, unless such footing or foundation is protected against settlement.

36.2.3 Permanent Excavations.

36.2.3.1 No permanent excavations shall be made, and no construction excavations shall be left open, that will endanger adjoining property or buildings or that will be a menace to public health or safety.

36.2.3.2 Permanent excavations and construction excavations shall be well drained, and the drainage shall function as long as the excavation exists.

36.2.3.3 Permanent excavations shall have retaining walls of an approved material with the required strength to retain the embankment plus any surcharge loads, or the embankment shall have safe side slopes, as determined by the authority having jurisdiction.

36.2.4 Fill.

36.2.4.1 Where footings or structural slabs of structures, or both, will be founded on fill, the provisions of 36.2.4 shall apply.

36.2.4.2 No fill shall be used for structural support of buildings and structures located wholly or partly in flood hazard areas subject to high-velocity wave action, as established by 39.4.2.

36.2.4.3 A report shall be prepared and submitted by a registered design professional for approval.

36.2.4.3.1 The report shall cover the following items:

(1) Preparation of the site to receive fill
(2) Specifications for fill material
(3) Test procedures to be used to determine optimum moisture content and maximum dry density of fill material
(4) Test procedures to be used to determine the in-situ dry density of the compacted fill

Copyright National Fire Protection Association
Provided by IHS under license with NFPA
No reproduction or networking permitted without license from IHS
Not for Resale

(5) Minimum acceptable dry density expressed as a percentage of the maximum dry density
(6) Maximum thickness of each lift of fill
(7) Minimum number and frequency of tests required to show compliance with the in-situ minimum dry density

36.2.4.3.2 Subject to the approval of the authority having jurisdiction, the report required in 36.2.4.3 shall not be required for fills of a minor nature, provided that the material is compacted to a minimum of 90 percent of maximum dry density, as determined by an approved test method.

36.2.4.4 Special inspection of placement of fill shall be provided in accordance with 40.3.5.

36.2.5 Site Preparation. Prior to construction, the area to be occupied by the structure shall be cleared of debris, vegetation, and top soil, to the depth necessary, to remove all organic material.

36.3 Investigation and Bearing Capacity of Soil.

36.3.1 Classification.

36.3.1.1 When required by the authority having jurisdiction, classification of the soil under all parts of the proposed structure shall be made in accordance with ASTM D 2487, *Standard Classification of Soils for Engineering Purposes (Unified Soil Classification System)*, based on examination of test borings or excavations made at the site. These findings shall be presented to the authority having jurisdiction in the geotechnical investigation report prepared by the responsible registered design professional (RDP).

36.3.1.2 The location of the test borings or excavations and the nature of the subsurface materials shall be indicated on the plans or in the geotechnical investigation report.

36.3.2 Soil Investigation. Where the bearing capacity of the soil is not known or is in question, or where the load to be imposed on the soil is unusual, the authority having jurisdiction shall be permitted to require examination and evaluation of subsoil conditions by a registered professional engineer or a load test.

36.3.2.1 To determine the safe bearing capacity by load tests, an area not less than 24 in. × 24 in. (610 mm × 610 mm) shall be loaded to not less than twice the maximum bearing capacity desired for use in the design.

36.3.2.2 The load specified in 36.3.2.1 shall be sustained by the soil until no additional settlement takes place for a period of not less than 48 hours.

36.3.3 Expansive Soils.

36.3.3.1 Where the nature of the soil is not known in sufficient detail, the authority having jurisdiction shall be permitted to require testing to determine the expansive characteristics of the soil.

36.3.3.2 Each potentially expansive stratum of soil above the level where a constant moisture content exists shall be tested in accordance with ASTM D 4318, *Standard Test Methods for Liquid Limit, Plastic Limit, and Plasticity Index of Soils*, to determine its plasticity index (PI).

36.3.3.2.1 If the PI of all stratums is less than 15, the soil shall not be considered expansive.

36.3.3.2.2 If the PI of any stratum is 15 or greater, the soil shall be considered potentially expansive and shall be subjected to additional approved tests and evaluation to determine if the soil will adversely affect the structural integrity and serviceability of the structure.

36.3.4 Presumptive Capacities. Where no unusual soil or moisture conditions are present, the permitted bearing capacities on supporting soils shall not exceed those set forth in Table 36.3.4(a) and Table 36.3.4(b), unless the design bearing capacity is substantiated by recognized tests, analysis, and procedures and then approved.

Table 36.3.4(a) Maximum Allowable Soil Pressures

	Minimum Depth of Footing Below Adjacent Ground		Pressure Permitted if Footing is at Minimum Depth*		Increase in Pressure for Each Foot of Depth for Which Footing is Below Minimum*		Maximum Pressure*	
Class of Material	ft	m	psf	kN/m²	psf	kN/m²	psf	kN/m²
Compact fine sand	1	0.3	1000†	47.9	200	9.6	5000	240†
Loose sand	2	0.6	500†	24.0	100	4.8	3000	144†
Medium stiff clay	1	0.3	2000	95.8	200	9.6	6000	287
Soft, sandy clay or clay	2	0.6	1000	47.9	50	2.4	2000	96
Compact inorganic sand and silt mixtures	1	0.3	1000	47.9	200	9.6	4000	192
Loose inorganic sand and silt mixtures	2	0.6	500	23.9	100	4.8	1000	48
Loose organic sand and silt mixtures and peat	—	—	0	0.0	0	0.0	0	0

*These pressures are considered sufficient to prevent failure of the supporting ground, but not to prevent excessive foundation movement or settlement where unusual soil or moisture conditions are encountered.
†Values are for footings 1 ft (0.30 m) wide and are permitted to be increased in direct proportion to the width of the footing to a maximum of two and one-half times the designed value.

Copyright National Fire Protection Association
Provided by IHS under license with NFPA
No reproduction or networking permitted without license from IHS
Not for Resale

Table 36.3.4(b) Maximum Allowable Lateral Soil Pressures

Class of Material	Permitted Pressure per Foot of Depth Below Natural Grade*†		Maximum Permitted Pressure*	
	psf	kN/m²	psf	kN/m²
Compact fine sand	200	9.6	2500	120
Medium clay	200	9.6	2500	120
Compact sandy loam	200	9.6	2500	120
Loose, coarse sand and gravel	200	9.6	2500	120
Soft clay	100	4.8	1500	72
Clay loam	100	4.8	1500	72
Poorly compacted sand	100	4.8	1500	72
Clays containing large amounts of silt	100	4.8	1500	72

*These pressures are considered sufficient to prevent failure of the supporting ground, but not to prevent excessive foundation movement or settlement where unusual soil or moisture conditions are encountered.

†Isolated poles, such as flagpoles or signs, are permitted to be designed using lateral bearing values equal to two times the tabulated values.

36.4 Soil-Bearing Footings.

36.4.1 General Provisions.

36.4.1.1 Footings shall be designed to minimize differential settlement.

36.4.1.2 Excavations for continuous footings shall meet the requirements of 36.4.1.2.1 and 36.4.1.2.2.

36.4.1.2.1 Excavations for continuous footings shall be cut true to line and grade, and the sides of footings shall be formed, except where soil conditions are such that the sides of the excavation stand firm and square.

36.4.1.2.2 Excavations shall be made to firm, clean bearing soil, to the frost line at the site, or to a depth 12 in. (305 mm) below the finish ground level, whichever is the greatest depth.

36.4.1.3 Footings shall be level or shall be stepped so that both the top and the bottom of the footings are level.

36.4.1.3.1 At steps, the footing shall have a vertical tie of the same cross section and design as the horizontal footings or the smaller of the footings so jointed.

36.4.1.3.2 The maximum riser shall be 18 in. (455 mm), and the minimum run between risers shall be 36 in. (915 mm).

36.4.1.4 Post-tensioned slab-on-ground, raft, or mat footings on expansive soils shall be designed and constructed in accordance with the PTI publication *Design and Construction of Post-Tensioned Slabs-on-Ground.*

36.4.1.5 Conventionally reinforced, non-post-tensioned slab-on-ground, raft, or mat footings on expansive soils shall be permitted to be designed and constructed in accordance with the WRI/CRSI publication *Design of Slab-on-Ground Foundations.*

36.4.2 Design Using Lateral Bearing.

36.4.2.1 Construction using posts or poles as cantilever columns embedded in concrete footings in the earth shall be permitted to be used to resist both axial and lateral loads.

36.4.2.2 The required depth to resist lateral loads shall be determined by use of the design criteria in 36.4.3 or 36.4.4, or by other approved methods.

36.4.3 Design Formula — No Constraint. The following formula shall be permitted to be used in determining the depth of embedment (d) required to resist lateral loads where no constraint is provided at the ground surface, such as rigid floor or ground surface pavement:

$$d = \frac{A}{2}\left[1+\sqrt{1+\frac{4.36h}{A}}\right]$$

where:

d = depth of embedment in earth less than or equal to 12 ft (3.7 m), for purposes of computing resistance provided by lateral soil pressure [ft(m)]
A = $(2.34P)/(S_1 b)$
h = distance in from ground surface to point of application of P [ft (m)]
P = applied lateral force [lb (kN)]
S_1 = permitted lateral soil-bearing pressure as set forth in Table 36.3.4(b), based on a depth one-third the depth of embedment [psf (kN/m²)]
b = diameter of round concrete footing or diagonal dimension of square concrete footing [ft (m)]

36.4.4 Design Formula — Constrained. The following formula shall be permitted to be used to determine the depth of embedment (d) required to resist lateral loads where constraint is provided at the ground surface, such as a rigid floor or pavement:

$$d = \sqrt{4.25\frac{Ph}{S_3 b}}$$

where:

d = depth of embedment in earth less than or equal to 12 ft (3.7 m), for purposes of computing resistance provided by lateral soil pressure [ft (m)]
P = applied lateral force [lb (kN)]
h = distance from ground surface to point of application of P [ft (m)]
S_3 = permitted lateral soil-bearing pressure as set forth in Table 36.3.4(b), based on a depth equal to the depth of embedment [psf (kN/m²)]
b = diameter of round concrete footing or diagonal dimension of square concrete footing [ft (m)]

36.4.5 Flood Hazard Areas.

36.4.5.1 Soil-bearing foundations shall be prohibited for buildings and structures located wholly or partly in flood hazard areas subject to high-velocity wave action, as established by 39.4.2.

--`,,```,,,,````-`-`,,`,,`,`,,`---
Copyright National Fire Protection Association
Provided by IHS under license with NFPA
No reproduction or networking permitted without license from IHS
Not for Resale

36.4.5.2 Soil-bearing foundations for buildings and structures located wholly in flood hazard areas not subject to high-velocity wave action shall meet the requirements of Chapter 39 of this *Code* and Chapter 2 of ASCE/SEI 24, *Flood Resistant Design and Construction*.

36.5 Pile Foundations.

36.5.1 Conditions of Use.

36.5.1.1 The use of types of piles not specifically mentioned in Section 36.5, and the use of piles under conditions not specifically covered herein, shall be permitted, subject to approval, upon submission of acceptable test data, calculations, or other information relating to the properties and load-carrying capacity of such piles.

36.5.1.2 Portions of piles standing unbraced in air, water, or soil, or other material not capable of providing lateral support, shall meet the requirements of 36.5.1.2.1 and 36.5.1.2.2.

36.5.1.2.1 Portions of piles standing unbraced in air, water, or soil, or other material not capable of providing lateral support, shall conform with the applicable column formula as specified in the material chapters in this *Code*.

36.5.1.2.2 Piles placed in firm ground shall be permitted to be considered restrained against flexural rotation and laterally supported at 60 in. (1525 mm) below the ground surface and, when placed in soft material, at 10 ft (3050 mm) below the ground surface, unless otherwise required by the authority having jurisdiction after a foundation investigation by an approved agency.

36.5.1.3 Where cast-in-place piles are used, reinforcement shall extend 10 ft (3050 mm) below the plane where the soil provides lateral support.

36.5.1.3.1 Pile caps and grade beams shall be connected to piles in a manner to transfer forces from the pile cap or grade beam to the pile.

36.5.1.3.2 Shells conforming to the requirements of 36.5.8.1(6) shall be permitted to be considered as reinforcement.

36.5.1.4 Where piles are placed in groups, and where soil conditions make load reductions advisable or necessary, the load permitted for a single pile shall be reduced by an approved method.

36.5.1.5 Reinforced concrete pile caps shall be provided for all pile groups.

36.5.1.5.1 Reinforced concrete pile caps shall extend laterally not less than 6 in. (150 mm) beyond the extreme pile surface and vertically not less than 4 in. (100 mm) below the pile butt.

36.5.1.5.2 Pile caps shall not be required where the piles are used to support grade beams, provided that the parts of the grade beams acting in place of the pile cap carry the loads as computed by a recognized method of analysis.

36.5.1.6 Individual pile caps or caissons shall be interconnected by ties, each of which can carry a horizontal force equal to 5 percent of the larger pile loading in tension and compression, unless it can be demonstrated that equivalent restraint can be provided by other approved methods.

36.5.1.7 For buildings and structures located wholly or partly in flood hazard areas, as established by 39.4.2, pile foundations shall meet the requirements of Chapter 39 of this *Code* and ASCE/SEI 24.

36.5.2 Axial and Lateral Loads on Piles. Axial and lateral loads on piles shall be determined by an approved formula, by load tests, or by a foundation investigation by an approved agency, if required by the authority having jurisdiction.

36.5.2.1 Dynamic Load Test. The axial load on a pile shall not exceed the value given by the formula shown in 36.5.2.1.1, unless such load is determined as specified in 36.5.1.1 or 36.5.2.

36.5.2.1.1 For all piles, the following shall apply:

$$\text{allowable axial load} = R/4$$

where:
R = ultimate driving resistance as determined in 36.5.2.1.2 or 36.5.2.1.3 [tons (metric tons)]

36.5.2.1.2 For steel piles, the following shall apply:

$$R = \frac{12Wh\left[(W+0.25P)/(W+P)\right]}{S+(24{,}000RL/AE)}$$

36.5.2.1.3 For other piles, the following shall apply:

$$R = \frac{12Wh\left[(W+0.1P)/(W+P)\right]}{S+(24{,}000RL/AE)}$$

where:
Wh = striking energy (foot-tons)
W = weight of striking parts (tons)
h = height of striking parts (ft)
P = weight of pile (tons)
S = permanent settlement of pile under the average of the last 10 blows (in.)
R = ultimate driving resistance (tons)
L = length of pile (ft)
A = average right cross-sectional area of pile material ($in.^2$)
E = modulus of elasticity of pile (psi)

36.5.2.2 Static Load Test.

36.5.2.2.1 Single piles, where tested, shall be loaded to at least twice the design load, and, where pile groups are tested, the test load shall be not less than one and one-half times the total design load for the group.

36.5.2.2.2 All load tests on piles shall be conducted in compliance with procedures set forth in ASTM D 1143, *Standard Test Method for Piles Under Static Axial Compressive Load*, unless modified with the concurrence of the authority having jurisdiction.

36.5.3 Driven Piles.

36.5.3.1 Piles shall be driven to a resistance and penetration in accordance with the plans and specifications.

36.5.3.2 Piles subjected to jetting shall meet the requirements of 36.5.3.2.1 and 36.5.3.2.2.

36.5.3.2.1 Piles shall be permitted to be jetted only when approved and when under the supervision of a registered design professional.

36.5.3.2.2 No jetting shall be permitted where it is considered detrimental to existing structures or piles previously installed.

Copyright National Fire Protection Association
Provided by IHS under license with NFPA
No reproduction or networking permitted without license from IHS
Not for Resale

36.5.4 Wood Piles.

36.5.4.1 Stresses permitted in compression parallel to the grain of wood piles shall comply with the requirements of Chapter 45.

36.5.4.2 Wood piles shall comply with the requirements in 36.5.4.2.1 through 36.5.4.2.8.

36.5.4.2.1 Wood piles shall be of one piece and shall conform to ASTM D 25, *Standard Specification for Round Timber Piles*.

36.5.4.2.2 Untreated piles shall be used only when it has been established that the cutoff will be below the lowest groundwater level assumed to exist during the life of the structure.

36.5.4.2.3 Pressure-preservative treatment shall meet the requirements of 36.5.4.2.3.1 and 36.5.4.2.3.2.

36.5.4.2.3.1 Pressure-preservative treatment for piles as set forth herein shall be in conformance with the requirements of AWPA C1, *Standard for Preservative Treatment of All Timber Products by Pressure Processes*, and AWPA C2, *Standard for the Preservative Treatment of Lumber, Timber, Bridge Ties, and Mine Ties by Pressure Processes,* for the treatment of wood piles.

36.5.4.2.3.2 Preservative treatment required herein shall not be required for rot- and borer-resistive piles when evidence of these characteristics is presented to the authority having jurisdiction.

36.5.4.2.4 The butt of wood piles supporting structures over the ground shall be permitted to be cut off at any elevation below the ground surface, provided that both of the following criteria are met:

(1) The piles shall be treated with the equivalent of Grade 1 creosote oil under pressure so as to retain not less than 12 lb/ft^3 (190 kg/m^3) of creosote oil.
(2) The pile butt shall be coated with two applications of hot creosote oil.

36.5.4.2.5 The butt of wood piles supporting a structure over water shall be permitted to project above the water to the height necessary, provided that the piles have been treated with the equivalent of Grade 1 creosote oil or 70-30 creosote–coal tar solution under pressure so as to retain not less than 20 lb/ft^3 (320 kg/m^3) of creosote oil or creosote–coal tar solution.

36.5.4.2.6 Wood piles shall be driven with a protective driving cap or ring when necessary to prevent brooming or splitting of the butt.

36.5.4.2.7 When brooming or splitting occurs, wood piles shall be cut back to solid wood before the final resistance to penetration is measured.

36.5.4.2.8 If required, when driving through or to hard material or to rock, wood piles shall be fitted with an approved, metal protective shoe.

36.5.5 Precast Concrete Piles.

36.5.5.1 The allowable compressive stress in precast concrete piles shall not exceed 0.33 f_c'.

36.5.5.2 Precast concrete piles shall conform to the requirements of 36.5.5.3 through 36.5.5.8.

36.5.5.3 The piles shall be cast of concrete having a specified compressive strength, f_c', of not less than 4000 psi (27.6 MPa) and shall be reinforced with a minimum of four longitudinal steel bars having total area of not less than 1 percent, or more than 4 percent, of the gross concrete area.

36.5.5.4 All longitudinal bars shall be of uniform size and shall be tied by not less than No. 2 hoops spaced 8 in. (205 mm) apart in the body of the pile and not over 3 in. (75 mm) apart for the first 18 in. (455 mm) from both the butt and the tip.

36.5.5.5 All reinforcement shall be protected by not less than 2 in. (51 mm) of concrete, except for piles exposed to seawater, which shall be protected by not less than 3 in. (75 mm) of concrete cover.

36.5.5.6 For point-bearing piles, the concrete area of the tip shall be not less than 75 percent of the area of the butt.

36.5.5.7 All precast concrete piles shall have their date of manufacture and the lifting points marked on the pile.

36.5.5.8 Precast concrete piles shall be prohibited from being driven until they have attained a compressive strength of not less than 75 percent of the specified compressive strength, but in no case shall a precast pile be permitted to be driven until it can withstand handling and driving stresses.

36.5.6 Prestressed Precast Concrete Piles.

36.5.6.1 Prestressed precast concrete piles shall conform to 36.5.5, and 36.5.6.2 through 36.5.6.6.

36.5.6.2 Prestressed concrete piles shall be cast of concrete having a specified compressive strength, f_c', of not less than 5000 psi (34.5 MPa).

36.5.6.3 The effective prestress in the prestressed concrete pile shall be not less than 700 psi (4.8 MPa).

36.5.6.4 The allowable compressive stress in the concrete of precast prestressed concrete piles shall not exceed the following:

$$f_c = 0.33 f_c' - 0.27 f_{pc}$$

where:

f_c = allowable compressive stress in precast prestressed concrete piles [psi (MPa)]
f_c' = specified compressive strength of concrete [psi (MPa)]
f_{pc} = effective stress due to prestressing on the gross pile section [psi (MPa)]

36.5.6.5 Longitudinal reinforcing shall be tied by No. 2 hoops or No. 5 AS&W gauge spirals spaced at the following intervals:

(1) 8 in. (205 mm) in the body of piling 14 in. (355 mm) or smaller
(2) 9 in. (230 mm) in the body of piling larger than 14 in. (355 mm)
(3) Not over 3 in. (75 mm) for the first 18 in. (455 mm) from both the butt and the tip

36.5.6.6 All reinforcement shall be protected by not less than 2 in. (51 mm) of concrete, except for piles exposed to seawater, which shall be protected by not less than 2½ in. (63 mm) of concrete cover.

36.5.7 Structural Steel Shapes. The materials used for structural steel piles shall conform to the requirements of 36.5.7.1 through 36.5.7.3.

36.5.7.1 Materials used for structural steel piles shall conform to the requirements of Chapter 44.

Copyright National Fire Protection Association
Provided by IHS under license with NFPA
No reproduction or networking permitted without license from IHS
Not for Resale

36.5.7.2 The sections used shall be rolled sections or comparable fully welded built-up sections from plate.

36.5.7.3 Every section shall have an average thickness of metal of not less than ⅜ in. (10 mm). The allowable stress shall not exceed 50 percent of the minimum specified yield strength of the material.

36.5.8 Cast-in-Place Concrete Piles.

36.5.8.1 Metal-cased concrete piles shall consist of a steel shell, driven in intimate contact with the surrounding soil and filled with concrete, and shall conform to the requirements of Chapter 41 and the following provisions:

(1) Steel shells shall be permitted to be uniformly tapered, step tapered, cylindrical, or a combination of such shapes, and shall be laterally corrugated, spirally corrugated, longitudinally fluted, or plain.
(2) Pile shells and end closures shall meet the following requirements:
   (a) They shall have the strength and rigidity to be driven, and to prevent harmful distortion caused by soil pressures or by driving of adjacent piles, until filled with concrete.
   (b) A reduction of cross-sectional area in excess of 15 percent shall be cause for rejection.
   (c) Shells shall be watertight to exclude water during the placing of concrete.
   (d) All rejected piles shall be removed or filled with gravel or concrete.
(3) The minimum diameter of a pile shell shall be 8 in. (205 mm).
(4) Concrete for cast-in-place piles shall meet the following requirements:
   (a) The concrete for cast-in-place piles shall have a specified compressive strength, f_c', of not less than 3000 psi (20.7 MPa).
   (b) The concrete shall be deposited in a continuous operation to ensure a full-sized pile without voids or separation.
   (c) Concrete shall be placed in the dry by tremie or other approved method.
(5) Splices of shell sections shall be designed to ensure the alignment of the shells and to develop the full strength of the shell section.
(6) The load on the shell shall meet the following requirements:
   (a) The load on the shell shall not exceed 12,000 psi (82.7 MPa) multiplied by the area of the shell.
   (b) Shells having a minimum wall thickness of 0.16 in. (4 mm) shall be permitted to carry part of the load.
   (c) The steel for the shells shall conform to the requirements of Chapter 44.
(7) For friction piles driven in material providing lateral support, the following requirements shall apply:
   (a) The allowable load shall be computed at the cross section located at a point equal to two-thirds of the embedded length of the pile, measured upward from the tip.
   (b) The load on the concrete shall not exceed 25 percent of the specified compressive strength of concrete, f_c', multiplied by the concrete area.
(8) For end-bearing piles, the following requirements shall apply:
   (a) The concrete area at the critical section shall be such that the unit stress on the concrete does not exceed $0.25\ f_c'$ under the pile load.
   (b) The area of the shell and the critical section of the concrete shall be measured at the elevation where the pile enters the stratum that furnishes end bearing.

36.5.8.2 Uncased concrete piles shall consist of concrete cast-in-place against earth in drilled holes meeting the following requirements:

(1) The construction procedure shall be such as to ensure the exclusion of any foreign matter while securing a full-sized shaft.
(2) The concrete shall have a specified compressive strength, f_c', of not less than 3000 psi (20.7 MPa).
(3) The compressive stress in the concrete shall not exceed $0.25\ f_c'$.

36.6 Foundation Walls.

36.6.1 General Requirements. Foundation walls shall be designed and constructed in accordance with the structural load requirements of Chapter 35 for the specific materials and the requirements of 36.6.1.1 through 36.6.1.3.

36.6.1.1 Isolated Piers Permitted. The authority having jurisdiction shall be permitted to approve isolated piers under the exterior walls of buildings in locations where extreme dampness exists.

36.6.1.2 Isolated Piers Substituted for Interior Foundation Walls. Isolated piers shall be permitted to be substituted for interior foundation walls for buildings of light-frame construction not over one story, provided that all of the following criteria are met:

(1) The piers are not over 24 in. (610 mm) high.
(2) The piers are a minimum of 12 in. × 12 in. (305 mm × 305 mm) in cross-sectional dimension.
(3) The piers are located not more than 8 ft (2440 mm) apart and at points of concentrated loads.

36.6.1.3 Flood Hazard Areas. Foundation wall construction shall be prohibited for buildings and structures located wholly or partly in flood hazard areas subject to high-velocity wave action, as established by 39.4.2.

36.6.1.3.1 For buildings and structures located within flood hazard areas not subject to high-velocity wave action, foundation walls enclosing an area below the design flood elevation shall have flood openings as required by Chapter 2 of ASCE/SEI 24, or shall be dry floodproofed in accordance with 39.11.1.2.

36.6.1.3.2 In areas below the design flood elevation, and enclosed by foundation walls not dry floodproofed in accordance with 39.11.1.2, the finish grade elevation of an underfloor space (such as a crawl space) shall be not lower than the finish grade elevation adjacent to the outside of the foundation wall.

36.6.2 Foundation Wall Thickness.

36.6.2.1 Minimum Thickness for Concrete and Masonry Walls. The minimum thickness of concrete and masonry foundation walls that are laterally supported at the top and bottom shall comply with 36.6.2.3, 36.6.2.4, 36.6.2.6, and 36.6.2.7, or shall be designed in accordance with ACI 318, *Building Code Requirements for Structural Concrete*, or ACI 530/ASCE 5/TMS 402, *Building Code Requirements for Masonry Structures*.

Copyright National Fire Protection Association
Provided by IHS under license with NFPA
No reproduction or networking permitted without license from IHS
Not for Resale

36.6.2.2 Foundation Walls not Meeting Parameters of Table 36.6.2.2 (a) through Table 36.6.2.2(d). Foundation walls that are not laterally supported at the top and bottom, and foundation walls that are not within the parameters of Table 36.6.2.2(a), Table 36.6.2.2(b), Table 36.6.2.2(c), or Table 36.6.2.2(d) shall be designed in accordance with ACI 530/ASCE 5/TMS 402 or ACI 318.

36.6.2.3 Thickness Based on Walls Supported. The thickness of foundation walls shall be not less than the thickness of the wall supported, unless otherwise permitted by 36.6.2.3.1.

36.6.2.3.1 Foundation walls of at least 8 in. (205 mm) nominal thickness shall be permitted to support brick-veneered frame walls, or cavity walls of 10 in. (255 mm) in thickness where the total height of the wall supported complies with the requirements of Chapter 6 of ACI 530/ASCE 5/TMS 402.

36.6.2.3.2 Corbeling of masonry shall be in accordance with Section 5.9.4 of ACI 530/ASCE 5/TMS 402.

36.6.2.4 Thickness Based on Soil Loads, Unbalanced Backfill Height, and Wall Height. Subject to the limitations of ASCE/SEI 7, Section 14, the thickness of foundation walls shall comply with the requirements of Table 36.6.2.2(a) for plain masonry and plain concrete walls or Table 36.6.2.2(b), Table 36.6.2.2(c), and Table 36.6.2.2(d) for reinforced concrete or masonry walls.

36.6.2.5 Rubble Stone. Subject to the limitations of ASCE/SEI 7, Section 14, foundation walls of rough or random rubble stone shall be not less than 16 in. (405 mm) thick.

Table 36.6.2.2(a) Plain Masonry and Plain Concrete Foundation Walls

		Minimum Nominal Wall Thickness (in.)		
		Soil Classes and Lateral Soil Load (psf/ft below natural grade)[a]		
Wall Height (ft)	**Height of Unbalanced Backfill (ft)**	**GW, GP, SW, and SP Soils 30**	**GM, GC, SM, SM-SC, and ML Soils 45**	**SC, MH, ML-CL, and Inorganic CL Soils 60**
Plain Masonry				
≤7	≤4	8	8	8
	5	8	10	10
	6	10	12	10 (solid)[b]
	7	12	10 (solid)[b]	10 (solid)[b]
8	≤4	8	8	8
	5	8	10	12
	6	10	12	12 (solid)[b]
	7	12	12 (solid)[b]	See footnote c.
	8	10 (solid)[b]	12 (solid)[b]	See footnote c.
9	≤4	8	8	8
	5	8	10	12
	6	12	12	12 (solid)[b]
	7	12 (solid)[b]	12 (solid)[b]	See footnote c.
	8	12 (solid)[b]	See footnote c.	See footnote c.
	9	See footnote c.	See footnote c.	See footnote c.
Plain Concrete				
≤7	≤5	7½	7½	7½
	6	7½	7½	8
	7	7½	8	10
8	≤5	7½	7½	7½
	6	7½	7½	10
	7	7½	10	10
	8	10	10	12
9	≤5	7½	7½	7½
	6	7½	7½	10
	7	7½	10	10
	8	10	10	12
	9	10	12	See footnote d.

For SI units, 1 in. = 25.4 mm; 1 ft = 0.3048 m; 1 psf/ft = 0.157 kPa/m.

[a] For design lateral soil loads, see Section 35.11. Soil classes are in accordance with the Unified Soil Classification System, and design lateral soil loads are for moist soil conditions without hydrostatic pressure.

[b] These entries represent solid, grouted hollow units or solid masonry units.

[c] A design in compliance with Chapter 43 or reinforcement in accordance with Table 36.6.2.2(b), Table 36.6.2.2(c), or Table 36.6.2.2(d) is required.

[d] A design in compliance with Chapter 41 is required, or reinforcement in accordance with Table 36.6.2.2(b), Table 36.6.2.2(c), or Table 36.6.2.2(d) is required.

Copyright National Fire Protection Association
Provided by IHS under license with NFPA
No reproduction or networking permitted without license from IHS
Not for Resale

Table 36.6.2.2(b) 8 in. Reinforced Concrete and Masonry Foundation Walls Where *d* is Greater than or Equal to 5 in.—Reinforced Masonry

		Vertical Reinforcement*		
		Soil Classes and Lateral Soil Load (psf/ft below natural grade)†		
Wall Height (ft)	Height of Unbalanced Backfill (ft)	GW, GP, SW, and SP Soils 30	GM, GC, SM, SM-SC, and ML Soils 45	SC, MH, ML-CL, and Inorganic CL Soils 60
≤7	≤4	#4 at 48 in. oc	#4 at 48 in. oc	#4 at 48 in. oc
	5	#4 at 48 in. oc	#4 at 48 in. oc	#4 at 40 in. oc
	6	#4 at 48 in. oc	#5 at 48 in. oc	#5 at 40 in. oc
	7	#4 at 40 in. oc	#5 at 40 in. oc	#6 at 48 in. oc
8	≤4	#4 at 48 in. oc	#4 at 48 in. oc	#4 at 48 in. oc
	5	#4 at 48 in. oc	#4 at 48 in. oc	#4 at 40 in. oc
	6	#4 at 48 in. oc	#5 at 48 in. oc	#5 at 40 in. oc
	7	#5 at 48 in. oc	#6 at 48 in. oc	#6 at 40 in. oc
	8	#5 at 40 in. oc	#6 at 40 in. oc	#7 at 40 in. oc
9	≤4	#4 at 48 in. oc	#4 at 48 in. oc	#4 at 48 in. oc
	5	#4 at 48 in. oc	#4 at 48 in. oc	#5 at 48 in. oc
	6	#4 at 48 in. oc	#5 at 48 in. oc	#6 at 48 in. oc
	7	#5 at 48 in. oc	#6 at 48 in. oc	#7 at 48 in. oc
	8	#5 at 40 in. oc	#7 at 48 in. oc	#8 at 48 in. oc
	9	#6 at 40 in. oc	#8 at 48 in. oc	#8 at 32 in. oc

For SI units, 1 in. = 25.4 mm; 1 ft = 0.3048 m; 1 psf/ft = 0.157 kPa/m.

*For alternative reinforcement, see 36.6.2.7.

†For design lateral soil loads, see Section 35.11. Soil classes are in accordance with the Unified Soil Classification System, and design lateral soil loads are for moist soil conditions without hydrostatic pressure.

Table 36.6.2.2(c) 10 in. Reinforced Concrete and Masonry Foundation Walls Where *d* is Greater than or Equal to 6¾ in.—Reinforced Masonry

		Vertical Reinforcement*		
		Soil Classes and Lateral Soil Load (psf/ft below natural grade)†		
Wall Height (ft)	Height of Unbalanced Backfill (ft)	GW, GP, SW, and SP Soils 30	GM, GC, SM, SM-SC, and ML Soils 45	SC, MH, ML-CL, and Inorganic CL Soils 60
≤7	≤5	#4 at 56 in. oc	#4 at 56 in. oc	#4 at 56 in. oc
	6	#4 at 56 in. oc	#4 at 48 in. oc	#4 at 40 in. oc
	7	#4 at 56 in. oc	#5 at 56 in. oc	#5 at 40 in. oc
8	≤4	#4 at 56 in. oc	#4 at 56 in. oc	#4 at 56 in. oc
	5	#4 at 56 in. oc	#4 at 56 in. oc	#4 at 48 in. oc
	6	#4 at 56 in. oc	#4 at 48 in. oc	#4 at 56 in. oc
	7	#4 at 48 in. oc	#4 at 32 in. oc	#6 at 56 in. oc
	8	#5 at 56 in. oc	#5 at 40 in. oc	#7 at 56 in. oc
9	≤4	#4 at 56 in. oc	#4 at 56 in. oc	#4 at 56 in. oc
	5	#4 at 56 in. oc	#4 at 56 in. oc	#4 at 48 in. oc
	6	#4 at 56 in. oc	#4 at 40 in. oc	#4 at 32 in. oc
	7	#4 at 40 in. oc	#5 at 48 in. oc	#6 at 48 in. oc
	8	#4 at 32 in. oc	#5 at 48 in. oc	#4 at 16 in. oc
	9	#5 at 40 in. oc	#6 at 40 in. oc	#7 at 40 in. oc

For SI units, 1 in. = 25.4 mm; 1 ft = 0.3048 m; 1 psf/ft = 0.157 kPa/m.

*For alternative reinforcement, see 36.6.2.7.

†For design lateral soil loads, see Section 35.11. Soil classes are in accordance with the Unified Soil Classification System, and design lateral soil loads are for moist soil conditions without hydrostatic pressure.

Copyright National Fire Protection Association
Provided by IHS under license with NFPA
No reproduction or networking permitted without license from IHS
Not for Resale

Table 36.6.2.2(d) 12 in. Reinforced Concrete and Masonry Foundation Walls Where *d* is Greater than or Equal to 8¾ in. —Reinforced Masonry

		Vertical Reinforcement*		
		Soil Classes and Lateral Soil Load (psf/ft below natural grade)†		
Wall Height (ft)	Height of Unbalanced Backfill (ft)	GW, GP, SW, and SP Soils 30	GM, GC, SM, SM-SC, and ML Soils 45	SC, MH, ML-CL, and Inorganic CL Soils 60
≤7	≤5	#4 at 72 in. oc	#4 at 72 in. oc	#4 at 72 in. oc
	6	#4 at 72 in. oc	#4 at 64 in. oc	#4 at 48 in. oc
	7	#4 at 72 in. oc	#4 at 48 in. oc	#5 at 56 in. oc
8	≤5	#4 at 72 in. oc	#4 at 72 in. oc	#4 at 72 in. oc
	6	#4 at 72 in. oc	#4 at 56 in. oc	#5 at 72 in. oc
	7	#4 at 64 in. oc	#5 at 64 in. oc	#4 at 32 in. oc
	8	#5 at 48 in. oc	#4 at 32 in. oc	#5 at 40 in. oc
9	≤4	#4 at 72 in. oc	#4 at 72 in. oc	#4 at 72 in. oc
	5	#4 at 72 in. oc	#4 at 72 in. oc	#4 at 64 in. oc
	6	#4 at 72 in. oc	#4 at 56 in. oc	#5 at 64 in. oc
	7	#4 at 56 in. oc	#4 at 40 in. oc	#6 at 64 in. oc
	8	#5 at 64 in. oc	#6 at 64 in. oc	#6 at 48 in. oc
	9	#5 at 56 in. oc	#7 at 72 in. oc	#6 at 40 in. oc

For SI units, 1 in. = 25.4 mm; 1 ft = 0.3048 m; 1 psf/ft = 0.157 kPa/m.

*For alternative reinforcement, see 36.6.2.7.

†For design lateral soil loads, see Section 35.11. Soil classes are in accordance with the Unified Soil Classification System, and design lateral soil loads are for moist soil conditions without hydrostatic pressure.

36.6.2.6 Foundation Walls. Subject to the limitations of ASCE/SEI 7, Section 14, foundation walls constructed in accordance with Table 36.6.2.2(a), Table 36.6.2.2(b), Table 36.6.2.2(c), or Table 36.6.2.2(d) shall comply with all of the following:

(1) Hollow and solid masonry units shall comply with ASTM C 90, *Standard Specification for Loadbearing Concrete Masonry Units*.
(2) Masonry shall be laid in running bond, and the mortar shall be Type M or Type S.
(3) Vertical reinforcement shall have a minimum yield strength of 60,000 psi (414 MPa).
(4) The specified location of the reinforcement shall equal or exceed the effective depth distance, *d*, noted in Table 36.6.2.2(b), Table 36.6.2.2(c), or Table 36.6.2.2(d), and the following shall apply:
    (a) The distance shall be measured from the face of the soil side of the wall to the center of vertical reinforcement.
    (b) The reinforcement shall be placed within the tolerances specified in ACI 530.1/ASCE 6/TMS 602, *Specifications for Masonry Structures*, Article 3.4B7 for the specified location.
(5) Grout shall have a specified compressive strength of not less than 2000 psi (13.8 MPa) at 28 days or shall comply with ASTM C 476, *Standard Specification for Grout for Masonry*.
(6) Concrete shall have a specified compressive strength of not less than 2500 psi (17.2 MPa) at 28 days.

36.6.2.7 Alternative Concrete or Masonry Foundation Wall Reinforcement. In lieu of the reinforcement provisions in Table 36.6.2.2(b), Table 36.6.2.2(c), or Table 36.6.2.2(d), alternative reinforcing bar sizes and spacings having an equivalent cross-sectional area of reinforcement per linear foot (linear meter) of concrete or masonry foundation wall shall be permitted to be used, provided that the spacing of reinforcement does not exceed 6 ft (1830 mm), and reinforcing bar size does not exceed No. 11.

36.6.3 Foundation Plate or Sill Bolting. Wood foundation plates or sills shall be bolted to the foundation or foundation walls as provided in Chapter 45.

36.6.4 Masonry Pier and Curtain Wall Foundations.

36.6.4.1 Masonry pier and curtain wall foundations shall be permitted to support detached one- and two-family dwellings of light-frame construction not more than two stories in height that are assigned to Seismic Design Category A, Seismic Design Category B, Seismic Design Category C, or Seismic Design Category D, provided that the following requirements are met:

(1) The wall shall be supported on a continuous concrete footing placed integrally with the exterior pier footings.
(2) The minimum actual thickness of the wall shall be not less than 3⅝ in. (92 mm) and integrally bonded into the piers.
(3) Piers shall be constructed in accordance with Section 43.3, and pier spacing shall be governed by the beam or girder design in accordance with Chapters 44 and 45, with a maximum spacing of 8 ft (2440 m) on center.
(4) The maximum height of a 4 in. (100 mm) wall shall not exceed 48 in. (1220 mm).
(5) Piers and anchorage shall be designed to resist the loads and forces determined in accordance with Chapter 35.
(6) The unbalanced fill for 4 in. (100 mm) walls shall not exceed 24 in. (610 mm) for solid masonry or 12 in. (305 mm) for hollow masonry.

-`,,```,,,,````-`-`,,`,,`,`,,`---

Copyright National Fire Protection Association
Provided by IHS under license with NFPA
No reproduction or networking permitted without license from IHS
Not for Resale

(7) In Seismic Design Category D, minimum reinforcement shall be provided in the horizontal and vertical directions, and the following also shall apply:
   (a) Minimum horizontal joint reinforcement shall be two No. 9 gauge wires spaced at not more than 6 in. (150 mm), or one ¼ in. (6.3 mm) diameter wire spaced at not more than 10 in. (255 mm).
   (b) Vertical reinforcement shall be minimum No. 4 bars spaced at not more than 48 in. (1220 mm).

36.6.4.2 Where conditions do not meet the requirements of 36.6.4.1, the foundation shall comply with the requirements of Chapter 43.

36.7* Wood Foundation Systems. Wood foundation systems shall be designed and constructed in accordance with the structural load requirements of Chapter 35 for the specific materials.

36.8 Waterproofing and Dampproofing. Walls and floors below ground level and enclosing usable space shall be waterproofed or dampproofed in accordance with this section.

36.8.1 Waterproofing Required. Floors and portions of walls, including joints and annular spaces around penetrating items, below the groundwater table shall be waterproofed using approved materials and methods.

36.8.2 Dampproofing Required. Floors and portions of walls located below ground level and above the groundwater table shall be dampproofed using approved materials and methods.

36.8.3 Foundation Drain.

36.8.3.1 Spaces below ground level required to be dampproofed shall be provided with an approved subsoil drain surrounding the foundation and located vertically so that it drains the gravel or stone base required under the floor slab by 36.8.4.

36.8.3.2 Discharge from the drain shall be by gravity or mechanical means in accordance with the UPC, *Uniform Plumbing Code*, to an approved location.

36.8.3.3 A subsoil drainage system shall not be required where the soil is classified as GW, GP, SW, or SP in accordance with ASTM D 2487.

36.8.4 Floor Base. Floors below ground level, other than those required to be waterproofed, shall be placed over a layer of gravel or crushed stone not less than 4 in. (100 mm) thick, and the following also shall apply:

(1) At least 90 percent of the material shall be retained on a No. 4 sieve.
(2) Approved means shall be provided to drain the base to the subsoil drain required by 36.8.3.
(3) The gravel or crushed stone base required by 36.8.4 shall not be required where the soil is classified as GW, GP, SW, or SP in accordance with ASTM D 2487.
(4) A vapor retarder complying with 41.6.3 shall be provided between the layer of gravel or crushed stone, or natural subgrade, and the bottom of the slab.

36.8.5 Site Grading.

36.8.5.1 The site within 10 ft (3050 mm), measured perpendicular to the foundation, shall be graded to slope away from the foundation at not less than 1 unit vertical in 12 units horizontal.

36.8.5.2 Where approved based on soil or climatic conditions, the slope away from the foundation required by 36.8.5.1 shall be permitted to be reduced to not less than 1 unit vertical in 24 units horizontal.

36.8.5.3 Where less than 10 ft (3050 mm) exist between the foundation and property line or another structure, an approved alternate method of diverting water away from the building shall be permitted to be used.

36.9 Retaining Walls. Walls built to retain or support the lateral pressure of earth or water, or other superimposed loads, shall be designed and constructed of masonry, concrete, steel, wood, or other approved materials.

36.9.1 Design. Retaining walls shall be designed to resist the design loads in Chapter 35 and to ensure stability against overturning, sliding, excessive foundation pressure, and water uplift.

36.9.2 Hydrostatic Pressure. Unless drainage is provided, the hydrostatic head of the water pressure shall be assumed to be equal to the height of the wall.

36.9.3 Concrete Retaining Walls. Concrete retaining walls shall be designed and constructed in accordance with ACI 318.

36.9.4 Reinforced Masonry Retaining Walls.

36.9.4.1 Masonry retaining walls shall be designed and constructed in accordance with ACI 530/ASCE 5/TMS 402.

36.9.4.2 Footings for reinforced masonry retaining walls shall be designed in accordance with ACI 318.

36.9.5 Segmental Retaining Walls. Segmental retaining walls shall be permitted to be designed and constructed in accordance with the NCMA publication, *Design Manual for Segmental Retaining Walls*.

Chapter 37 Exterior Wall Construction

37.1 General.

37.1.1 Scope. All exterior walls shall be in compliance with this chapter and shall meet all other applicable requirements of the *Code*.

37.1.1.1 Light-Transmitting Plastics. Light-transmitting plastics used in exterior walls shall be in accordance with Section 48.7.

37.1.1.2 Flood Resistance. For buildings and structures located wholly or partly within the flood hazard area established in 39.4.2, exterior walls below the design flood elevation shall comply with the requirements of Chapter 39.

37.1.2 Lintels. Fire protection to the bottom flange of lintels, shelf angles, or plates shall not be required, provided that one of the following conditions is met:

(1) The span is 6 ft (1830 mm) or less.
(2) The lintels, shelf angles, or plates support only masonry veneer.

37.1.3 Parapets. Parapet walls shall be provided on the exterior of all buildings where exterior walls are required to have a fire resistance rating by Table 7.3.2.1, unless otherwise permitted by 37.1.3.1.

37.1.3.1 Parapets Not Required. Parapets shall not be required where any of the following conditions exist:

(1) Where unprotected openings are permitted

Copyright National Fire Protection Association
Provided by IHS under license with NFPA
No reproduction or networking permitted without license from IHS
Not for Resale

(2) Where the roof slopes up more than 4 in. in 12 in. (100 mm in 305 mm) from the back of the exterior wall of the building, and the roof covering has a Class A rating
(3) Where the exterior wall of the building is located 20 ft (6100 mm) from the property line or on an alley or public way 20 ft (6100 mm) or more wide
(4) Where the entire building is protected by an automatic sprinkler system in accordance with NFPA 13, *Standard for the Installation of Sprinkler Systems*
(5) Where the roof is constructed of noncombustible or limited-combustible materials and the joint between the wall and the roof is sealed using an approved fire penetration seal or fireblock
(6) In Type III (211), Type IV, and Type V (111) construction where all of the following conditions are met:
   (a) The joint between the wall and the roof is sealed using an approved penetration seal or fireblock.
   (b) The roof deck meets one of the following criteria:
      i. For a distance of at least 48 in. (1220 mm) from the wall, the roof deck has no openings and is of noncombustible or limited-combustible materials or fire-retardant-treated wood.
      ii. For a distance of at least 48 in. (1220 mm) from the wall, the roof deck has no openings and 5/8 in. (16 mm) Type X gypsum board is directly beneath the underside of the roof deck, or is supported by a minimum 2 in. (51 mm) ledger at the roof deck, and is attached to the roof framing members.
   (c) The entire roof covering has a minimum rating of Class B.
   (d) Roof framing elements that are within 60 in. (1525 mm) of the exterior wall are parallel to the exterior wall and are protected to the same fire resistance rating required for the exterior wall.
   (e) Roof framing elements that are perpendicular to the wall and all supporting elements of the roof are protected to the same fire resistance rating required for the exterior wall for their full span (roof frame) or height (supporting elements).
(7) Where the building has an area of not more than 1000 ft^2 (93 m^2) on any floor

37.1.3.2 Fire Resistance of Parapets. Parapets shall have the same degree of fire resistance as is required for the wall on which they are erected.

37.1.3.3 Parapet Height. Parapets shall extend not less than 30 in. (760 mm) above any part of the roof that is within 10 ft (3050 mm) of the parapet wall.

37.1.3.4 Coping of Parapets. All parapet walls shall have coping of approved materials.

37.1.4 Vertical Separation of Exterior Openings.

37.1.4.1 Where buildings are over three stories in height, and are not protected throughout with a fire sprinkler system in accordance with NFPA 13 or NFPA 13R, *Standard for the Installation of Sprinkler Systems in Residential Occupancies up to and Including Four Stories in Height*, openings in exterior walls that expose openings in the next story above shall be separated or protected in accordance with 37.1.4.2 where the openings in the next story above are located within a 60 in. (1525 mm) radius.

37.1.4.2 Protection of openings shall comply with at least one of the following:

(1) Either opening is protected in accordance with Section 7.3.
(2) Protection is provided to separate the openings with a spandrel panel not less than 36 in. (915 mm) high or a wall with a 1-hour fire resistance rating.
(3) Protection is provided between the openings with a 30 in. (760 mm) horizontally projecting barrier with a 1-hour fire resistance rating.

37.2 Projections.

37.2.1 Cornices. Cornices, architectural appendages, eave overhangs, and other protections extending beyond the exterior wall shall be supported by the building and shall be permitted to be constructed of exterior fire-retardant-treated wood or materials required by the type of construction in accordance with Section 7.2.

37.2.2 Bay and Oriel Windows, Porches, Decks, and Balconies. Bay windows, oriel windows, porches, decks, balconies, and similar projections shall conform to the fire resistance rating requirements for exterior walls and floors in Chapter 7 for the type of construction of the building, except as permitted by 37.2.2.1 through 37.2.2.3.

37.2.2.1 Bay and Oriel Windows. Bay windows and oriel windows in buildings 40 ft (12.2 m) in height or less shall be permitted to be constructed of fire-retardant-treated wood.

37.2.2.2 Porches, Decks, and Balconies. Porches, decks, balconies, and similar projections from buildings shall be permitted to be constructed of fire-retardant-treated wood where attached to buildings less than 40 ft (12.2 m) in height.

37.2.2.3 Combustible Construction. Balconies and similar projections on buildings of Type III, Type IV, and Type V construction shall be permitted to be of combustible construction and shall not be required to have a fire resistance rating where the building is protected by an electrically supervised automatic sprinkler system in accordance with NFPA 13 and where automatic sprinkler protection is extended to such balconies and projections.

37.3* Weather Resistance.

37.3.1 Weather-Resistive Barriers. All walls exposed to the weather shall have a weather-resistive barrier to protect the structure.

37.3.1.1 The exposed wall envelope shall be designed and constructed to prevent the accumulation of water within the wall assembly by providing a water-resistive barrier behind the exterior veneer. Protection against condensation in the exterior wall assembly shall be provided in accordance with Chapter 51.

37.3.1.2 Barriers shall be a minimum of one layer of building paper meeting Federal Specification UUB-790a, *Specification for Building Paper, Vegetable Fiber: Kraft, Waterproofed, Water Repellent, and Fiber Resistant,* for kraft waterproof building paper, or No. 15 asphalt saturated felt complying with Type 1 felt in accordance with ASTM D 226, *Standard Specification for Asphalt-Saturated Organic Felt Used in Roofing and Waterproofing.*

37.3.1.3 The weather-resistive barrier shall be free from holes and tears other than those created by attachments and wall penetrations.

37.3.1.4 The barrier shall be applied horizontally and lapped upper layer over lower layer in weatherboard fashion for lengths of not less than 3 in. (75 mm) horizontally and 6 in. (150 mm) vertically.

Copyright National Fire Protection Association
Provided by IHS under license with NFPA
No reproduction or networking permitted without license from IHS
Not for Resale

37.3.1.5 The weather-resistive barrier shall be lapped with all penetration flashings.

37.3.1.6 Weather-resistive barriers shall not be required where one of the following conditions exists:

(1) Where the structure is not intended for human occupancy
(2) Where the exterior cladding is of an approved material or system
(3) Where the exterior wall is back-plastered
(4) Where the exterior wall is sheathed with a water-repellent panel
(5) Where concrete or masonry is constructed in accordance with Chapters 41 or 43
(6) Where breakaway walls are constructed in accordance with Section 39.6

37.3.2 Flashing. Flashing made of a waterproof, corrosion-resistant material shall be installed on the exposed wall at the following locations in such a manner as to make the exterior wall waterproof:

(1) At exterior wall penetrations
(2) At exterior window and door openings
(3) At chimneys
(4) Under and at the ends of masonry, wood, or metal copings and sills
(5) Continuously above projecting wood trim
(6) At the intersection of exterior walls and porches and decks
(7) At wall and roof intersections
(8) At built-in gutters

37.3.3 Exterior Wall Pockets. In exterior walls of buildings or structures, wall pockets or crevices in which moisture can accumulate shall be avoided or protected with caps or drips, or other approved means shall be provided to prevent water damage.

37.3.4 Masonry. Flashing and weepholes shall be located in the first course of masonry above finished ground level above the foundation wall or slab and at other points of support, including structural floors, shelf angles, and lintels, where anchored veneers are designed in accordance with Chapter 43.

37.3.5 Parapets. All parapets and exterior horizontal surfaces shall be flashed with a waterproof, corrosion-resistant material.

37.3.6 Window Wells. All window wells shall be extended below the window sill and flashed with a waterproof, corrosion-resistant material.

37.3.7 Decks and Balconies. Decks and balconies shall be waterproof and sloped a minimum of ¼ in. in 12 in. (6.3 mm in 305 mm) (2 percent) to a drain or outer edge.

37.4 Metal Composite Materials. Metal composite materials (MCM) used in exterior walls shall be in accordance with Section 37.4.

37.4.1 The requirements of Section 37.4 shall apply to metal composite materials (MCM) having a minimum exterior skin thickness of 0.019 in. (0.5 mm), a minimum interior skin thickness of 0.010 in (0.25 mm), and a maximum panel thickness of ¼ in. (6.3 mm) where installed on exterior walls.

37.4.2 MCM shall be permitted to be installed on the exterior of buildings classified as Type I, Type II, Type III, or Type IV construction, as specified in 37.4.4, without changing the construction classification of the building.

37.4.3 MCM shall not reduce the required fire resistance rating of the exterior wall to which the MCM are attached.

37.4.4 MCM installed on the exterior of buildings classified as Type I, Type II, Type III, or Type IV construction shall comply with each of the following conditions:

(1) MCM that are part of the exterior wall assembly shall be tested in accordance with NFPA 285, *Standard Fire Test Method for Evaluation of Fire Propagation Characteristics of Exterior Non-Load-Bearing Wall Assemblies Containing Combustible Components*, using the maximum panel thickness intended for use and shall meet the conditions of acceptance specified therein.
(2) MCM shall have a Class A rating as specified in Chapter 10, based on the maximum thickness intended for use.
(3) MCM shall be completely separated from the building interior by a thermal barrier meeting the requirements in 48.3.3.

37.4.4.1 The thermal barrier specified in 37.4.4(3) shall not be required where MCM meet either of the following conditions:

(1) MCM are installed as part of a balcony or similar architectural appendage or as exterior trim.
(2) MCM are approved for the specific installation, based on tests conducted using the maximum thickness intended for use in accordance with one of the following:
   (a) NFPA 286, *Standard Methods of Fire Tests for Evaluating Contribution of Wall and Ceiling Interior Finish to Room Fire Growth*
   (b) UL 1040, *Standard for Fire Test of Insulated Wall Construction*
   (c) FM 4880, *Approval Standard for Class 1 Insulated Wall or Wall and Roof/Ceiling Panels; Plastic Interior Finish Materials; Plastic Exterior Building Panels; Wall/Ceiling Coating Systems; Interior or Exterior Finish Systems*
   (d) UL 1715, *Standard for Safety for Fire Test of Interior Finish Material*

37.4.4.2 MCM tested in accordance with 37.4.4.1(2) shall be tested as an assembly in the manner intended for use that shall include joints, seams, fasteners, and other construction details typical of the intended installation.

37.4.5 MCM shall not be required to comply with 37.4.4, provided that one of the following conditions is met:

(1) MCM shall be permitted to be installed to a maximum height of 40 ft (12.2 m) above grade where either 37.4.5(1)(a) or 37.4.5(1)(b) and 37.4.5(1)(c) are met as follows:
   (a) Where the exterior wall has 60 in. (1525 mm) or less horizontal separation, the MCM shall not cover more than 10 percent of the exterior wall.
   (b) Where the exterior wall has 60 in. (1525 mm) or less horizontal separation, the area of the exterior wall covered by the MCM shall not be limited.
   (c) MCM shall have a Class B rating, as specified in Chapter 10, based on the maximum thickness intended for use.
(2) MCM shall be permitted to be installed to a maximum height of 50 ft (15 m) above grade, provided that all of the following conditions are met:
   (a) MCM shall be installed on the exterior wall so that the aggregate area of contiguous panels bounded by vertical joints and a vertical separation of not less than 48 in. (1220 mm), as measured to adjacent MCM, does not exceed 300 ft^2 (27.8 m^2).

Copyright National Fire Protection Association
Provided by IHS under license with NFPA
No reproduction or networking permitted without license from IHS
Not for Resale

(b) MCM shall have a self-ignition temperature of not less than 650°F (343°C) when tested in accordance with ASTM D 1929, *Standard Test Method for Determining Ignition Temperature of Plastics*.
(c) MCM shall have a Class B rating, as specified in Chapter 10, based on the maximum thickness intended for use.

37.4.6 MCM installed on the exterior walls of buildings classified as Type V construction shall have a Class B rating, as specified in Chapter 10, based on the maximum thickness intended for use.

37.4.7 MCM shall be labeled.

37.5 Exterior Insulation and Finish Systems (EIFS). Exterior insulation and finish systems (EIFS) used in exterior walls shall be in accordance with Section 37.5.

37.5.1 General. The provisions of Section 37.5 shall govern the materials, construction, and quality of EIFS for use as nonload-bearing barrier walls and exterior cladding systems.

37.5.2 Reference Standard. EIFS shall be specified and installed in accordance with EIMA 99A, *Exterior Insulation and Finish Systems (EIFS)*.

37.5.3 Expansion Joints. Expansion joints shall be provided in EIFS in the following locations:

(1) Where EIFS adjoin dissimilar construction
(2) Where building expansion joints occur
(3) Where prefabricated panels abut one another
(4) Where the substrate changes
(5) Where significant structural movement occurs due to changes in roofline, building shape, or structural system
(6) In the floor lines in multilevel wood frame construction

37.5.4 Quality Assurance.

37.5.4.1 Manufacturer. The manufacturer shall furnish a report certifying that the materials are in conformance with EIMA 99A, this *Code*, and the contract documents.

37.5.4.2 Contractor. The installing contractor shall have a certificate of instruction from the respective EIFS manufacturer's applicator training program.

Chapter 38 Roof Assemblies and Roof Structures

38.1 Scope. All roof assemblies and rooftop structures shall comply with the requirements of this chapter.

38.1.1 Special Definitions. A list of special terms used in this chapter follows. Extracted, with permission, from ASTM D 1079 — *Standard Terminology Relating to Roofing, Waterproofing, and Bituminous Materials*, copyright ASTM International, 100 Barr Harbor Drive, West Conshohocken, PA 19428.

38.1.1.1 Built-Up Roofing. A continuous, semiflexible membrane consisting of plies of saturated felts, coated felts, fabrics, or mats assembled in place with alternate layers of bitumen, and surfaced with mineral aggregate, bituminous materials, or a granule surfaced sheet (abbreviation, BUR). [**ASTM D 1079:** 2.1]

38.1.1.2 Coal Tar. A dark brown to black cementitious material produced by the destructive distillation of coal. [**ASTM D 1079:** 2.1]

38.1.1.3 Flashing. The system used to seal membrane edges at walls, expansion joints, drains, gravel stops, and other places where the membrane is interrupted or terminated. Base flashing covers the edges of the membrane. Cap or counterflashing shields the upper edges of the base flashing. [**ASTM D 1079:** 2.1]

38.1.1.4 Gravel. Coarse, granular aggregate, with pieces larger than sand grains, resulting from the natural erosion of rock. [**ASTM D 1079:** 2.1]

38.1.1.5 Inorganic. Being or composed of matter other than hydrocarbons and their derivatives, or matter that is not of plant or animal origin. [**ASTM D 1079:** 2.1]

38.1.1.6 Metal Roof Panel. An interlocking metal sheet having a minimum installed weather exposure of 3 ft^2 (0.28 m^2) per sheet.

38.1.1.7 Metal Roof Shingle. A metal sheet having an installed weather exposure of less than 3 ft^2 (0.28 m^2) per sheet.

38.1.1.8 Organic. Being or composed of hydrocarbons or their derivatives, or matter of plant or animal origin. [**ASTM D 1079:**2.1]

38.1.1.9 Roof Assembly. The component(s) above the roof structural framing, including the roof deck, vapor barrier, insulation, roof cover, coatings or toppings, or any combination thereof.

38.1.1.10 Roof Covering. The membrane, which may also be the roof assembly, that resists fire and provides weather protection to the building against water infiltration, wind, and impact.

38.1.1.11 Sloped Glazing. Any installation of glass or other transparent, translucent, or opaque glazing material installed at a slope of 15 degrees or more from the vertical plane, including glazing materials in skylights, roofs, and sloped walls.

38.1.1.12 Vapor Retarder. A layer of material or a laminate used to appreciably reduce the flow of water vapor into the roofing system. [**ASTM D 1079:**2.1]

38.1.2 Performance Requirements. Roof assemblies shall provide weather protection and be resistant to exterior fire exposure, interior fire exposure, wind, and hail, as required by this chapter.

38.2 Exterior Fire Exposure.

38.2.1 Required Tests.

38.2.1.1 Where roof coverings are required by 38.2.2 to be fire resistance rated as either Class A, Class B, or Class C for exterior fire exposure, they shall be tested according to either NFPA 256, *Standard Methods of Fire Tests of Roof Coverings*, or other approved test methods; FM 4470, *Approval for Class 1 Roof Covers*; UL 790, *Standard Test Methods for Fire Tests of Roof Covering*; or ASTM E 108, *Standard Test Methods for Fire Tests of Roof Coverings*.

38.2.1.2 The following applications shall be permitted to be used without testing where Class A, Class B, or Class C roof coverings are required:

(1) Brick or masonry
(2) Clay or concrete roof tile
(3) Exposed concrete roof deck
(4) Copper or ferrous sheets or shingles
(5) Slate
(6) Minimum of 4 lb/ft^2 (19.5 kg/m^2) of gravel or slag embedded in a flood coat of asphalt or coal tar over built-up roofing (BUR) installed at maximum slope of ½ in./ft (13 mm/305 mm)

Copyright National Fire Protection Association
Provided by IHS under license with NFPA
No reproduction or networking permitted without license from IHS
Not for Resale

(7) Ballasted sheet membrane roofing system installed in accordance with 38.9.12.6
(8) Concrete paver blocks used as ballast installed in accordance with 38.9.12.6

38.2.1.3 The fire resistance rating shall be applicable to the type of deck to be used and the maximum slope to be provided.

38.2.2* Minimum Roof Covering Classification. Roof coverings shall comply with Table 38.2.2, unless otherwise permitted by the following:

(1) Single-family dwellings and townhouses with a leading roof edge separated a minimum of 60 in. (1525 mm) from property lines shall be permitted to use nonclassified roof coverings.
(2) One- or two-story buildings of Type II (000), Type III (200), or Type V (000) construction with a horizontally projected roof area less than 2000 ft^2 (186 m^2), and with a minimum 10 ft (3050 mm) separation from the leading edge of the roof to the property line on all sides of the building, shall be permitted to use nonclassified roof coverings.
(3) Agricultural buildings shall be permitted to use nonclassified roof coverings.

Table 38.2.2 Minimum Roof Covering Classification

Type of Construction	Minimum Roof Covering Classification
Type I (442)	B
Type I (332)	B
Type II (222)	B
Type II (111)	B
Type II (000)	C
Type III (211)	B
Type III (200)	C
Type IV (2HH)	B
Type V (111)	B
Type V (000)	C

38.3 Interior Fire Exposure.

38.3.1 Fire Resistance–Rated Construction. Where the roof assembly is required by Chapter 7 to have a fire resistance rating, the assembly shall comply with Chapter 8.

38.3.2* Above-Deck Combustible Components Within a Roof Assembly. In Type I and Type II construction, where above-deck combustible materials are used as components of the roof assembly, other than for structural and lightweight structural concrete roof decks or fire-retardant-treated wood decks with minimum $^{23}/_{32}$ in. (18 mm) thick tongue-and-groove longitudinal edges, Exposure 1 wood structural panels, or 1 in. (25 mm) nominal tongue-and-groove boards, the roof assembly shall be tested in accordance with one of the following:

(1) FM 4450, *Approval Standard for Class 1 Insulated Steel Deck Roofs*
(2) FM 4470, *Approval Standard for Class 1 Roof Covers*
(3) UL 1256, *Standard for Fire Test of Roof Deck Constructions*

38.3.3 Foam Plastic Insulation. Foam plastic insulation shall meet the requirements of Section 48.3.

38.4 Wind Resistance.

38.4.1 Roof Assemblies and Flashings.

38.4.1.1 All roof assemblies and flashings shall be designed to withstand wind pressures as required by Section 35.9 or as prescribed in 38.9.2.8, 38.9.4.8, and 38.9.12.6.

38.4.1.2 Wind resistance of roof assemblies and flashings shall be determined by calculation in accordance with the material design standards or tested as required by Section 38.9.

38.4.2 Gravel and Stone.

38.4.2.1 For buildings less than or equal to 60 ft (18 m) in height and located outside hurricane-prone regions, as defined by ASCE/SEI 7, *Minimum Design Loads for Buildings and Other Structures*, the roof surface shall be protected in accordance with 38.4.2.1.1 or 38.4.2.1.2.

38.4.2.1.1 For single-ply membranes, gravel ballast or concrete paver blocks shall provide complete membrane coverage and shall be installed in accordance with ANSI/SPRI RP-4, *Wind Design Standard for Ballasted Single-Ply Roofing Systems*.

38.4.2.1.2 Built-up roofs surfaced with gravel or slag applied at a minimum rate of 4 lb/ft^2 (19.5 kg/m^2) and embedded in a flood coat of hot asphalt or coal tar shall be permitted.

38.4.2.2 For buildings greater than 60 ft (18 m) in height or located within hurricane-prone regions, as defined by ASCE/SEI 7, the roof surface shall be protected in accordance with 38.4.2.2.1 through 38.4.2.2.2.

38.4.2.2.1 For single-ply membranes, concrete paver blocks shall provide complete membrane coverage and shall be installed in accordance with ANSI/SPRI RP-4.

38.4.2.2.2 For built-up roofs surfaced with gravel or slag, the gravel or slag shall be applied at a minimum rate of 4 lb/ft^2 (19.5 kg/m^2).

38.4.2.2.2.1 The gravel or slag shall be embedded into a double flood coat of hot asphalt or coal tar to ensure full embedment.

38.4.2.2.2.2 After cooling, any loose gravel or slag shall be removed from the roof.

38.4.2.2.2.3 All graveled roofs greater than 60 ft (18 m) in height shall have a minimum parapet height of 24 in. (610 mm).

38.5 Hail Resistance.

38.5.1 Hail Exposure Maps. The hail exposure map shown in Figure 38.5.1 shall be used to determine the hail exposure specified in 38.5.1.1 and 38.5.1.2.

38.5.1.1 Moderate Hail Areas. Areas subject to a minimum of one hail day with 1½ in. (38 mm) hail or greater in a 20-year period shall be considered to have moderate hail exposure.

38.5.1.2 Severe Hail Areas. Areas subject to a minimum of one hail day with 2 in. (50 mm) hail or greater in a 20-year period shall be considered to have severe hail exposure.

38.5.2 Impact Resistance Testing for Hail. Roof assemblies shall be tested and classified for hail impact resistance as specified in 38.5.2.1 through 38.5.2.3.

Copyright National Fire Protection Association
Provided by IHS under license with NFPA
No reproduction or networking permitted without license from IHS
Not for Resale

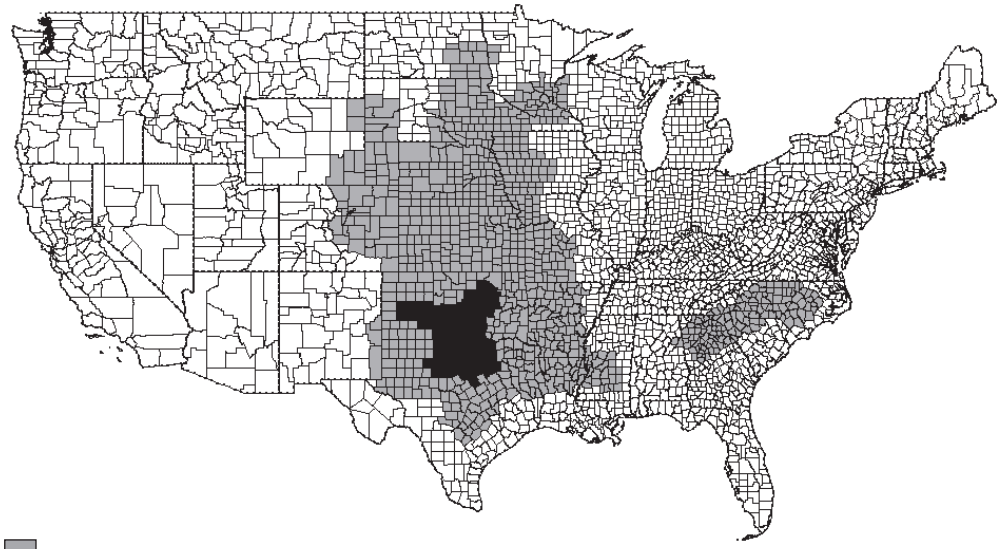

FIGURE 38.5.1 Hail Exposure Map.

38.5.2.1 Tests for Moderate Hail. All roof assemblies installed in locations classified as moderate hail exposure shall be tested and classified in accordance with one of the following:

(1) They shall be tested and classified as moderate hail (MH) or severe hail (SH) in accordance with FM 4470.
(2) They shall be tested and classified as Class 2, Class 3, or Class 4 in accordance with UL 2218, *Standard for Impact Resistance of Prepared Roof Covering Materials*.
(3) They shall be tested and listed as Class 2, Class 3, or Class 4 in accordance with FM 4473, *Test Standard for Specification Test Protocol for Impact Resistance Testing of Rigid Roofing Materials by Impacting with Freezer Ice Balls*.

38.5.2.2 Tests for Severe Hail. All roof assemblies installed in locations classified as severe hail exposure shall be tested and classified in accordance with one of the following:

(1) They shall be tested and classified as severe hail (SH) in accordance with FM 4470.
(2) They shall be tested and classified as Class 3 or Class 4 in accordance with UL 2218.
(3) They shall be tested and listed as Class 3 or Class 4 in accordance with FM 4473.

38.5.2.3 Ballasted Roof Coverings. Roof coverings that are ballasted with concrete roof pavers complying with ASTM C 1491, *Standard Specification for Concrete Roof Pavers*, for large stone ballast, or roof coverings that are covered with a minimum of 4 lb/ft^2 (19.5 kg/m^2) of gravel or slag embedded in a flood coat of hot asphalt or coal tar, shall be considered acceptable for moderate or severe hail exposure.

38.6 Roof Drainage. The roof drainage capacity shall be as required by Section 38.6.

38.6.1* Primary Roof Drainage Systems. The requirements of 38.6.1.1 through 38.6.1.4 shall apply to primary roof drainage systems.

38.6.1.1 A primary roof drainage system shall be provided.

38.6.1.2 The system shall be capable of removing rainwater from the roof at a rate at least equal to the rainfall rates (inches per hour) of a 100-year mean recurrence interval (MRI), 60-minute duration storm.

38.6.1.3 The design rainfall rate (inches per hour) shall be determined from the UPC, *Uniform Plumbing Code*, Appendix D.

38.6.1.4 Where controlled-flow drainage systems are acceptable to the authority having jurisdiction, a primary roof drainage system installed according to Section 1108 of the UPC shall be permitted, with the requirements of 38.6.2 still applicable.

38.6.2* Secondary Roof Drainage Systems. The requirements of 38.6.2.1 through 38.6.2.5 shall apply to secondary roof drainage systems.

38.6.2.1 A secondary roof drainage system shall be provided.

38.6.2.2 The system shall be capable of removing rainwater from the roof at a rate that is at least equal to the rainfall rate (inches per hour) of a 100-year MRI, 15-minute duration storm, assuming blockage of the primary system.

38.6.2.3 The secondary drainage system shall be completely independent of the primary roof drainage system.

38.6.2.4 The roof design load shall include the weight of rainwater up to the height above the drainage inlet that is required to achieve the secondary drainage design capacity, taking into consideration potential ponding resulting from roof deflection.

38.6.2.5 Where wall scuppers or interior drains are used for secondary drainage, the base of the secondary drainage inlets shall be a minimum of 2 in. (51 mm), and a maximum of 6 in. (150 mm), above the base of the primary drainage inlets.

Copyright National Fire Protection Association
Provided by IHS under license with NFPA
No reproduction or networking permitted without license from IHS
Not for Resale

38.6.3 Piping Systems, Gutters, and Wall Scuppers. All vertical and horizontal piping systems, gutters, and wall scuppers used for roof drainage shall be designed and constructed in accordance with Chapter 11 of the UPC, taking into consideration the sizes of all components and slope for horizontal piping and gutters.

38.7 Roof Flashing Requirements. Flashing shall be provided at all junctures of roofs and vertical surfaces, at valleys, and around all roof penetrations.

38.8 Ventilation of Attic Space.

38.8.1* Attic spaces shall be ventilated as approved for the building configuration, the climatological conditions of the site, and the moisture and temperature conditions associated with the occupancy and use of the building.

38.8.2 Insulation shall be in accordance with NFPA 900, *Building Energy Code*.

38.9 Roof Materials and Assemblies.

38.9.1 General.

38.9.1.1 Roof assemblies shall be designed and installed according to this *Code* and the manufacturer's printed installation instructions and to ensure weather protection for the building.

38.9.1.2 Materials used within a roof assembly shall be as specified within this chapter.

38.9.1.3 Insulation used within a roof assembly shall comply with standards referenced in Table 38.9.1.3.

38.9.2 Asphalt Shingles.

38.9.2.1 Material Requirements. Materials used for asphalt shingle roof coverings shall comply with the requirements of the standards referenced in Table 38.9.2.1.

Table 38.9.1.3 Roofing Insulation Materials Standards

Material	Standard
Cellular glass insulation	ASTM C 552
Fiberboard insulation	ASTM C 208
Mineral fiber insulation	ASTM C 726
Perlite insulation	ASTM C 728
Polyisocyanurate, faced insulation	ASTM C 1289
Polyisocyanurate, unfaced insulation	ASTM C 591
Spray polyurethane insulation	ASTM C 1029
Polystyrene insulation	ASTM C 578

Table 38.9.2.1 Asphalt Shingle Roofing Materials Standards

Material	Standard
Fiberglass reinforced asphalt shingles	ASTM D 3462
Organically reinforced asphalt shingles	ASTM D 225

38.9.2.2 Slope Requirements. Asphalt shingle roofs shall be installed with minimum slopes in accordance with manufacturer's printed installation instructions, but in no case shall asphalt shingles be installed at slopes less than 2 in./ft (51 mm/305 mm).

38.9.2.3 Roof Deck Requirements. Roof decks shall be solidly sheathed, except where the roof assembly is specifically designed for a different system.

38.9.2.4 Underlayment Requirements.

38.9.2.4.1 Roof coverings designed to be applied to roofs with a minimum slope of 2 in./ft (51 mm/305 mm) shall have underlayment installed in accordance with 38.9.2.4.2.

38.9.2.4.2 Underlayment used beneath asphalt shingles shall meet the requirements of Type I of ASTM D 226, *Standard Specification for Asphalt-Saturated Organic Felt Used in Roofing and Waterproofing*; ASTM D 4869, *Standard Specification for Asphalt-Saturated Organic Felt Shingle Underlayment Used in Steep Slope Roofing*; or ASTM D 6757, *Standard Specification for Steep Slope Underlayment Felt Containing Inorganic Fibers*.

38.9.2.5* Ice Dam Protection. In regions where the average daily temperature in January is 30°F (–1°C) or less, a self-adhering, polymer modified bitumen sheet meeting the requirements of ASTM D 1970, *Standard Specification for Self-Adhering Polymer Modified Bituminous Sheet Materials Used as Steep Roofing Underlayment for Ice Dam Protection*, shall be used as underlayment from the eave edge to a point at least 24 in. (610 mm) inward from the interior plane of the exterior wall.

38.9.2.6 Flashing Requirements. All flashing for asphalt shingles shall comply with manufacturer's requirements and 38.9.2.6.

38.9.2.6.1 Base and Cap Flashing.

38.9.2.6.1.1 Either metal- or mineral-surfaced roll roofing shall be permitted to be used for base flashing.

38.9.2.6.1.2 Where metal is used, it shall be corrosion resistant and at least 0.019 in. (0.48 mm) thick.

38.9.2.6.1.3 Where roll roofing is used, it shall be a mineral-surfaced product weighing at least 77 lb/100 ft^2 (3.77 kg/m^2).

38.9.2.6.1.4 Only corrosion-resistant metal cap flashing shall be used.

38.9.2.6.2 Valleys.

38.9.2.6.2.1 All steep roofs shall have valley linings.

38.9.2.6.2.2 Valley linings shall be installed prior to the application of roof-covering materials.

38.9.2.6.2.3 Open valleys (that is, valleys not covered with shingles) shall be lined with metal or two plies of mineral-surfaced roll roofing.

(A) Where metal is used, metal linings shall be at least 16 in. (405 mm) wide, corrosion resistant, and at least 0.019 in. (0.48 mm) thick.

(B) Where mineral-surfaced roll roofing is used, it shall be at least 18 in. (455 mm) wide for the bottom layer and at least 36 in. (915 mm) wide for the top layer.

38.9.2.6.2.4 Open valleys shall use material complying with ASTM D 3909, *Standard Specification for Asphalt Roll Roofing (Glass Felt) Surfaced with Mineral Granules* or ASTM D 6380, *Standard Specification for Asphalt Roll Roofing (Organic Felt)*.

--`,,```,,,,````-`-`,,`,,`,`,,`---
Copyright National Fire Protection Association
Provided by IHS under license with NFPA
No reproduction or networking permitted without license from IHS
Not for Resale

38.9.2.6.2.5 Closed valleys (that is, valleys covered with shingles) shall use material that complies with ASTM D 6380 Class S Type III or Class M Type II; ASTM D 1970; or ASTM D 3909.

38.9.2.6.3 Drip Edge.

38.9.2.6.3.1 All steep roofs shall have metal drip edges at eaves and gables.

38.9.2.6.3.2 All metal drip edges shall be corrosion resistant and at least 0.019 in. (0.48 mm) thick.

38.9.2.6.3.3 Eave drip edges shall extend a minimum of ¼ in. (6.3 mm) below the sheathing and onto the roof a minimum of 2 in. (51 mm).

38.9.2.6.3.4 Drip edges shall be attached at 12 in. o.c. (305 mm o.c.) maximum, and joints shall not be overlapped less than 4 in. (100 mm).

38.9.2.6.3.5 Chimneys wider than 24 in. (610 mm) shall have crickets or saddles installed to divert water. Crickets or saddle coverings shall be sheet metal or the same material as the roof covering.

38.9.2.7 Fastener Requirements. Fasteners used to attach asphalt shingles shall be corrosion resistant in accordance with ASTM F 1667. They shall have a minimum 12-gauge shank and a minimum 0.375 in. (9.5 mm) diameter head. Roof deck penetrations of fasteners shall be a minimum of ¾ in. (19 mm), or, where the deck sheathing is less than ¾ in. (19 mm), penetration shall be through the sheathing.

38.9.2.8 Wind Requirements.

38.9.2.8.1 Asphalt shingles shall be tested in accordance with either ASTM D 3161, *Standard Test Method for Wind-Resistance of Asphalt Shingles (Fan-Induced Method)*, or UL 2390, *Standard for Tests for Wind Resistant Asphalt Shingles with Sealed Tabs*, and ASTM D 6381, *Standard Test Method for Measurement of Asphalt Shingle Mechanical Uplift Resistance*.

38.9.2.8.1.1 Shingles Tested with ASTM D 3161. Where tested in accordance with ASTM D 3161, asphalt shingles shall be tested for, and shall comply with, the wind speed as required in Section 35.9.

(A) For roofs located where the basic wind speed required in Section 35.9 is 85 mph (38 m/s) up to, but not including, 110 mph (49 m/s), asphalt composition shingles shall comply with, and be labeled as, Class D or Class F in accordance with ASTM D 3161.

(B) For roofs located where the basic wind speed required in Section 35.9 is 110 mph (49 m/s) or greater, asphalt composition shingles shall comply with, and be labeled as, Class F in accordance with ASTM D 3161.

38.9.2.8.1.2 Shingles Tested with UL 2390 and ASTM D 6381.

(A) Where tested in accordance with UL 2390 and ASTM D 6381, asphalt composition shingles shall be suitable for roofs on buildings 60 ft (18 m) or less in height in wind exposures B and C, and Occupancy Category I or Occupancy Category II where the basic wind speed in accordance with Section 35.9 is as follows:

(1) Where less than or equal to 90 mph (40 m/s), asphalt shingles shall be labeled UL 2390, Class D; UL 2390, Class G; or UL 2390, Class H.
(2) Where less than or equal to 120 mph (54 m/s), asphalt shingles shall be labeled UL 2390, Class G or UL 2390, Class H.
(3) Where less than or equal to 150 mph (67 m/s), asphalt shingles shall be labeled UL 2390, Class H.

(B) Buildings greater than 60 ft (18 m), located in wind exposure D, or assigned to Occupancy Category III or Occupancy Category IV shall have the wind load and uplift resistance determined by special calculations using the procedure of UL 2390 and ASTM D 6381.

38.9.2.8.2 Installation of asphalt shingles shall be in accordance with the manufacturer's printed installation instructions and shall be attached as tested.

38.9.2.8.3 Asphalt shingle wrappers shall bear a label indicating compliance with the tested wind classification and reference the test method used, which shall be either ASTM D 3161, or UL 2390 and ASTM D 6381.

38.9.3 Built-Up Roofing (BUR).

38.9.3.1 Material Requirements. Materials used within a BUR roof assembly shall comply with the requirements of the standards referenced in Table 38.9.3.1.

Table 38.9.3.1 BUR Roofing Materials Standards

Material	Standard
Acrylic coatings used in roofing	ASTM D 6083
Aggregate surfacing	ASTM D 1863
Asphalt	ASTM D 312
Asphalt adhesive used in roofing	ASTM D 3747
Asphalt cements used in roofing	ASTM D 2823
Asphalt cements used in roofing	ASTM D 3019
Asphalt cements used in roofing	ASTM D 4586
Asphalt coatings	ASTM D 1227
Asphalt coatings	ASTM D 2823
Asphalt coatings	ASTM D 4479
Asphalt glass felt	ASTM D 2178
Asphalt primer	ASTM D 41
Asphalt-saturated and asphalt-coated organic felt base sheet	ASTM D 2626
Asphalt-saturated organic felt (perforated)	ASTM D 226
Asphalt-coated glass fiber base sheet	ASTM D 4601
Coal tar cements	ASTM D 4022
Coal tar cements	ASTM D 5643
Coal tar pitch	ASTM D 450, Type I or Type II
Coal tar primer	ASTM D 43
Coal tar–saturated organic felt	ASTM D 227
Glass mat, coal tar	ASTM D 4990
Glass mat, venting type	ASTM D 4897
Mineral-surfaced inorganic cap sheet	ASTM D 3909
Mineral-surfaced roll roofing	ASTM D 3909
Mineral-surfaced roll roofing	ASTM D 6380
Thermoplastic fabrics	ASTM D 5665
Thermoplastic fabrics	ASTM D 5726

Copyright National Fire Protection Association
Provided by IHS under license with NFPA
No reproduction or networking permitted without license from IHS
Not for Resale

38.9.3.2* Slope Requirements. BUR roof assemblies shall slope at least ¼ in./ft (6.3 mm/305 mm) toward drains or roof eaves. Coal tar built-up roof coverings shall have a minimum slope of ⅛ in./ft (3.2 mm/305 mm) unless specifically designed to retain water.

38.9.3.3 Roof Deck Requirements. Roof decks shall be solidly sheathed, except where the roof assembly is specifically designed for a different system.

38.9.3.4 Flashing Requirements.

38.9.3.4.1 Flashing used for BUR roof assemblies shall be installed in accordance with the manufacturer's printed installation instructions and, where metal, shall be corrosion resistant.

38.9.3.4.2* The metal edge securement for BUR roof assemblies, except gutters, shall be tested, listed, and installed in accordance with FM 4435, *Test Standard for Roof Perimeter Flashing*, or ANSI/SPRI ES-1, *Wind Design Guide for Edge Systems Used with Low Slope Roofing Systems*.

38.9.3.5* Fastener Requirements. Fasteners shall be corrosion resistant.

38.9.3.6 Wind Requirements. BUR roof assemblies shall be tested for wind resistance in accordance with one of the following applicable tests:

(1) FM 4470, *Approval Standard for Class I Roof Covers*
(2) UL 580, *Standard for Tests for Uplift Resistance of Roof Assemblies*
(3) UL 1897, *Standard for Uplift Tests for Roof Covering Systems*

38.9.3.7 Impact-Resistance Requirements. BUR roof assemblies shall be tested for impact resistance in accordance with ASTM D 3746, *Standard Test Method for Impact Resistance of Bituminous Roofing Systems*.

38.9.4 Concrete and Clay Tiles.

38.9.4.1 Material Requirements. Materials used for concrete or clay tile roof coverings shall comply with the requirements of the standards referenced in Table 38.9.4.1.

Table 38.9.4.1 Concrete and Clay Tile Roofing Materials Standards

Material	Standard
Clay tiles	ASTM C 1167
Concrete roof tiles	ASTM C 1492

38.9.4.2 Slope Requirements. Concrete and clay tile roof coverings shall be installed with minimum slopes in accordance with the manufacturer's printed installation instructions, but in no case shall concrete and clay tiles be installed at slopes less than 2½ in./ft (64 mm/305 mm).

38.9.4.3 Roof Deck Requirements. Roof decks shall be solidly sheathed, except where the roof assembly is specifically designed for a different system.

38.9.4.4 Underlayment Requirements.

38.9.4.4.1 Roof coverings designed to be applied to roofs with a minimum slope of 2½ in./ft (64 mm/305 mm) shall have underlayment installed in accordance with 38.9.4.4.2.

38.9.4.4.2 Underlayment used beneath concrete and clay tiles shall meet the requirements of Type I or Type II of ASTM D 226, Type I or Type II of ASTM D 4869, or ASTM D 6757. Perforated underlayment shall not be permitted.

38.9.4.5* Ice Dam Protection. In regions where the average daily temperature in January is 30°F (–1°C) or less, a self-adhering, polymer modified bitumen sheet meeting the requirements of ASTM D 1970 shall be used as underlayment from the eave edge to a point at least 24 in. (610 mm) inward from the interior plane of the exterior wall.

38.9.4.6 Flashing Requirements.

38.9.4.6.1 Flashing and counterflashing shall be installed in accordance with the manufacturer's printed installation instructions.

38.9.4.6.2 Metal shall be not less than 0.019 in. (0.48 mm) thick (26 gauge) and shall be corrosion resistant.

38.9.4.6.3 Valley flashing shall extend 11 in. (280 mm) minimum each way from the centerline and have a splash diverter rib at least 1 in. (25 mm) high at the centerline of the valley.

38.9.4.6.4 Valley metal shall be overlapped 4 in. (100 mm) minimum.

38.9.4.6.5 For roofs with slope equal to or greater than 2½ in./ft (64 mm/305 mm), a 36 in. (915 mm) wide underlayment shall be installed in addition to other required underlayment.

38.9.4.6.6 Where ice dam protection is required, the valley underlayment shall be solidly cemented to the roofing underlayment for slopes less than 7 in./ft (180 mm/305 mm) or be self-adhering polymer modified bitumen sheet.

38.9.4.7 Fastener Requirements.

38.9.4.7.1 Fasteners shall be corrosion resistant and not less than 11 gage with 5/16 in. (8 mm) head and of sufficient length to penetrate the deck ¾ in. (19 mm) minimum or through the deck, whichever is less.

38.9.4.7.2 Wire for attaching tile shall be 0.083 in. (2 mm) thick minimum.

38.9.4.7.3 Fastening is required at all perimeters, which includes three tile courses but not less than 36 in. (915 mm) on either side of hips, ridges, and edges of eaves and rakes.

38.9.4.8 Wind Requirements. Concrete and clay roof tile shall be installed according to FRSA/NTRMA 07320/1, *Concrete and Clay Roof Tile Installation Manual*, and the design wind speed shall be in accordance with Section 35.9.

38.9.5 Liquid-Applied Coatings.

38.9.5.1 Material Requirements. Liquid-applied coatings shall comply with the requirements of the standards referenced in Table 38.9.5.1.

38.9.5.2* Slope Requirements. Liquid-applied coatings shall slope at least ¼ in./ft (6.3 mm/305 mm) toward drains or roof eaves.

38.9.5.3 Roof Deck Requirements. Roof decks shall be solidly sheathed, except where the roof assembly is specifically designed for a different system.

38.9.5.4 Flashing Requirements. Flashing used for liquid-applied coating roof assemblies shall be installed in accordance with Section 38.7 and the manufacturer's printed installation instructions and, where metal, shall be corrosion resistant.

--`,,```,,,,````-`-`,,`,,`,`,,`---

Copyright National Fire Protection Association
Provided by IHS under license with NFPA
No reproduction or networking permitted without license from IHS
Not for Resale

Table 38.9.5.1 Liquid-Applied Coating Roofing Materials Standards

Material	Standard
Acrylic coatings used in roofing	ASTM D 6083
Asphalt coatings	ASTM D 2823
Asphalt coatings	ASTM D 4479
Liquid-applied coatings	ASTM C 836
Liquid-applied coatings	ASTM C 957
Liquid-applied coatings	ASTM D 1227
Liquid-applied coatings	ASTM D 3468
Liquid-applied coatings	ASTM D 6694

38.9.6 Modified Bitumen.

38.9.6.1 Material Requirements. Materials used within a modified bitumen roof assembly shall comply with the requirements of the standards referenced in Table 38.9.6.1.

38.9.6.2* Slope Requirements. Modified bitumen roof assemblies shall slope at least ¼ in./ft (6.3 mm/305 mm) toward drains or roof eaves.

38.9.6.3 Roof Deck Requirements. Roof decks shall be solidly sheathed, except where the roof assembly is specifically designed for a different system.

Table 38.9.6.1 Modified Bitumen Roofing Materials Standards

Material	Standard
Asphalt	ASTM D 312
Asphalt glass felt	ASTM D 2178
Asphalt primer	ASTM D 41
Asphalt-saturated and asphalt-coated organic felt base sheet	ASTM D 2626
Asphalt-coated glass fiber base sheet	ASTM D 4601
Glass mat, venting type	ASTM D 4897
Modified bitumen sheets	CGSB 37-GP-56M
Modified bitumen sheets, atactic polypropylene modified, with polyester and glass fiber reinforcements	ASTM D 6223
Modified bitumen sheets, atactic polypropylene modified, with polyester reinforcements	ASTM D 6222
Modified bitumen sheets, SBS modified, with factory-applied metal sheet	ASTM D 6298
Modified bitumen sheets, SBS modified, with glass fiber reinforcements	ASTM D 6163
Modified bitumen sheets, SBS modified, with polyester reinforcements	ASTM D 6164
Modified bitumen sheets, SBS modified, with polyester and glass fiber reinforcements	ASTM D 6162

38.9.6.4 Flashing Requirements.

38.9.6.4.1 Flashing used for modified bitumen roof assemblies shall be installed in accordance with the manufacturer's printed installation instructions and, where metal, shall be corrosion resistant.

38.9.6.4.2* The metal edge securement for modified bitumen roof assemblies, except gutters, shall be tested, listed, and installed in accordance with FM 4435 or ANSI/SPRI ES-1.

38.9.6.5* Fastener Requirements. Fasteners shall be corrosion resistant.

38.9.6.6 Wind Requirements. Modified bitumen roof assemblies shall be tested for wind resistance in accordance with one of the following applicable tests:

(1) FM 4470
(2) UL 580
(3) UL 1897

38.9.6.7 Impact-Resistance Requirements. Modified bitumen roof assemblies shall be tested for impact resistance in accordance with ASTM D 3746.

38.9.7 Metal Roof Panels.

38.9.7.1 Material Requirements. Materials used for metal panel roof coverings shall comply with the requirements of 38.9.7.

38.9.7.1.1 Metal sheet roof covering systems that incorporate supporting structural systems shall be designed in accordance with Chapter 44. Metal sheet roof coverings installed over structural decking shall comply with Table 38.9.7.1.1.

38.9.7.1.2 The materials used for metal roof panels shall be naturally corrosion resistant or provided with corrosion resistance in accordance with Table 38.9.7.1.2.

Table 38.9.7.1.1 Metal Roof Panels Materials Standards

Material	Standard
Aluminum	ASTM B209, $t > 0.024$ in. (0.61 mm) for roll-formed panels and $t \geq 0.019$ in. (0.48 mm) for press-formed shingles
Copper	16 oz/ft^2 (4.9 kg/m^2) for metal sheet roof-covering systems
	12 oz/ft^2 for preformed metal shingle systems
Copper, lead-coated	ASTM B 101
Lead, hard	2 lb/ft^2 (9.8 kg/m^2)
Lead, soft	3 lb/ft^2 (14.6 kg/m^2)
Steel	ASTM A 924
Terne (tin) and terne-coated stainless	Terne coating of 40 lb (18.2 kg) per double base box, field painted where applicable in accordance with manufacturer's installation instructions

t: Thickness.

Copyright National Fire Protection Association
Provided by IHS under license with NFPA
No reproduction or networking permitted without license from IHS
Not for Resale

Table 38.9.7.1.2 Corrosion Resistance

Aluminum alloy-coated steel	ASTM A875 GF60
Aluminum-coated steel	ASTM A463 T2 65
Aluminum-zinc alloy-coated steel	ASTM A 792 AZ 50
Galvanized steel	ASTM A 653 G-90
Prepainted steel	ASTM A 755

38.9.7.2 Slope Requirements. Minimum slopes for metal roof panels shall comply with the following:

(1) The minimum slope for lapped, nonsoldered seam metal roofs without applied lap sealant shall be 3 units vertical in 12 units horizontal (25 percent slope).
(2) The minimum slope for lapped, nonsoldered seam metal roofs with applied lap sealant shall be ½ vertical unit in 12 units horizontal (4 percent slope). Lap sealants shall be applied in accordance with the approved manufacturer's installation instructions.
(3) The minimum slope for standing seam roof systems shall be ¼ unit vertical in 12 units horizontal (2 percent slope).

38.9.7.3 Roof Deck Requirements. Roof decks shall be solidly sheathed, except where the roof assembly is specifically designed for a different system.

38.9.7.4 Underlayment Requirements.

38.9.7.4.1 Roof coverings designed to be applied to roofs with a minimum slope of 3 in./ft (75 mm/305 mm) shall have underlayment installed in accordance with 38.9.7.4.2.

38.9.7.4.2 Underlayments used beneath metal roofing applied to a supporting substrate shall meet the requirements of Type I or Type II of ASTM D 226, Type I or Type II of ASTM D 4869, or ASTM D 6757. Perforated underlayment shall not be permitted.

38.9.7.5* Ice Dam Protection. In regions where the average daily temperature in January is 30°F (–1°C) or less, a self-adhering, polymer modified bitumen sheet meeting the requirements of ASTM D 1970 shall be used as underlayment from the eave edge to a point at least 24 in. (610 mm) inward from the interior plane of the exterior wall.

38.9.7.6 Flashing Requirements.

38.9.7.6.1 Flashing used for metal panel roof assemblies shall be installed in accordance with the manufacturer's printed installation instructions and shall be corrosion resistant.

38.9.7.6.2* The metal edge securement for metal panel roof assemblies, except gutters, shall be tested, listed, and installed in accordance with FM 4435 or ANSI/SPRI ES-1.

38.9.7.7 Fastener Requirements. Metal roof panels shall be secured to the supports in accordance with approved manufacturers' fasteners. In the absence of manufacturers' recommendations, the following fasteners shall be used:

(1) Galvanized fasteners shall be used for steel roofs.
(2) Hard copper or copper alloy shall be used for copper roofs.
(3) Stainless steel fasteners shall be permitted for all types of metal roofs.

38.9.7.8 Wind Requirements.

38.9.7.8.1 Through-fastened metal panel roof assemblies shall be tested for wind resistance in accordance with one of the following applicable tests:

(1) ASTM E 1592, *Standard Test Method for Structural Performance of Sheet Metal Roof and Siding Systems by Uniform Static Air Pressure Difference.*
(2) FM 4471, *Approval Standard for Class I Panel Roofs*
(3) UL 580
(4) UL 1897

38.9.7.8.2* Except as noted in 38.9.7.8.3, standing seam metal panel roof assemblies shall be tested for wind resistance, where the test specimen contains not less than three full panel widths and not less than four full panel spans (five structural elements), in accordance with one of the following applicable tests:

(1) ASTM E 1592
(2) FM 4471
(3) UL 580
(4) UL 1897

38.9.7.8.3 Metal roofs constructed of cold-formed steel, where the roof deck acts as the roof covering and provides both weather protection and support for structural loads, shall be permitted to be designed and tested in accordance with the applicable referenced structural design standard in Section 44.6.

38.9.8 Metal Roof Shingles.

38.9.8.1 Material Requirement. Materials used for metal roof shingle coverings shall comply with the requirements of 38.9.8.

38.9.8.1.1 Materials used for metal roof shingles shall comply with Table 38.9.7.1.1.

38.9.8.1.2 The materials used for metal roof panels shall be naturally corrosion resistant or provided with corrosion resistance in accordance with Table 38.9.7.1.2.

38.9.8.2 Slope Requirements. Metal roof shingles shall not be installed on roof slopes below 3 units vertical in 12 units horizontal.

38.9.8.3 Roof Deck Requirements. Roof decks shall be solidly sheathed, except where the roof assembly is specifically designed for a different system.

38.9.8.4 Underlayment Requirements.

38.9.8.4.1 Roof coverings designed to be applied to roofs with a minimum slope of 3 in./ft (75 mm/305 mm) shall have underlayment installed in accordance with 38.9.8.4.2.

38.9.8.4.2 Underlayments used beneath metal roofing applied to a supporting substrate shall meet the requirements of Type I or Type II of ASTM D 226, Type I or Type II of ASTM D 4869, or ASTM D 6757. Perforated underlayment shall not be permitted.

38.9.8.5* Ice Dam Protection. In regions where the average daily temperature in January is 30°F (–1°C) or less, a self-adhering, polymer modified bitumen sheet meeting the requirements of ASTM D 1970 shall be used as underlayment from the eave edge to a point at least 24 in. (610 mm) inward from the interior plane of the exterior wall.

38.9.8.6 Flashing Requirements. Roof valley flashing shall be of corrosion-resistant metal of the same material as the roof covering or shall comply with the standards in Table 38.9.7.1.1.

38.9.8.7 Fastener Requirements. Metal roof shingle coverings shall be secured to the roof in accordance with the approved manufacturer's installation instructions.

Copyright National Fire Protection Association
Provided by IHS under license with NFPA
No reproduction or networking permitted without license from IHS
Not for Resale

38.9.8.8 Wind Requirements. Metal shingle roof assemblies shall be tested for wind resistance in accordance with one of the following applicable tests:

(1) UL 580
(2) UL 1897

38.9.9 Mineral-Surfaced Roll Roofing.

38.9.9.1 Material Requirements. Materials used within a mineral-surfaced roll roofing covering shall comply with the requirements of the standards referenced in Table 38.9.9.1.

Table 38.9.9.1 Mineral-Surfaced Roll Roofing Materials Standards

Material	Standard
Asphalt cements used in roofing	ASTM D 3019
Asphalt cements used in roofing	ASTM D 4586
Asphalt-coated glass fiber base sheet	ASTM D 4601
Asphalt-saturated and asphalt-coated organic felt base sheet	ASTM D 2626
Asphalt-saturated organic felt (perforated)	ASTM D 226
Mineral-surfaced roll roofing	ASTM D 3909
Mineral-surfaced roll roofing	ASTM D 6380

38.9.9.2 Slope Requirements. Mineral-surfaced roll roofing shall slope at least 1 in./ft (25 mm/305 mm) toward drains or roof eaves.

38.9.9.3 Roof Deck Requirements. Roof decks shall be solidly sheathed, except where the roof assembly is specifically designed for a different system.

38.9.9.4 Underlayment Requirements.

38.9.9.4.1 Roof coverings designed to be applied to roofs with a minimum slope of 3 in./ft (75 mm/305 mm) shall have underlayment installed in accordance with 38.9.9.4.2.

38.9.9.4.2 Underlayments used beneath mineral-surfaced roll roofing shall meet the requirements of Type I or Type II of ASTM D 226, Type I or Type II of ASTM D 4869, or ASTM D 6757. Perforated underlayment shall not be permitted.

38.9.9.5* Ice Dam Protection. In regions where the average daily temperature in January is 30°F (–1°C) or less, a self-adhering, polymer modified bitumen sheet meeting the requirements of ASTM D 1970 shall be used as underlayment from the eave edge to a point at least 24 in. (610 mm) inward from the interior plane of the exterior wall.

38.9.9.6 Flashing Requirements.

38.9.9.6.1 Flashing used for mineral-surfaced roll roofing assemblies shall be installed in accordance with the manufacturer's printed installation instructions and, where metal, shall be corrosion resistant.

38.9.9.6.2* The metal edge securement for mineral-surfaced roll roofing assemblies, except gutters, shall be tested, listed, and installed in accordance with FM 4435 or ANSI/SPRI ES-1.

38.9.9.7* Fastener Requirements. Fasteners shall be corrosion resistant.

38.9.9.8 Wind Requirements. Mineral-surfaced roll roofing assemblies shall be tested for wind resistance in accordance with one of the following applicable tests:

(1) FM 4470
(2) UL 580
(3) UL 1897

38.9.9.9 Impact-Resistance Requirements. Mineral-surfaced roll roofing coverings shall be tested for impact resistance in accordance with ASTM D 3746.

38.9.10 Slate.

38.9.10.1 Material Requirements. Slate used as a roof covering shall comply with the requirements of ASTM C 406, *Standard Specification for Roofing Slate.*

38.9.10.2 Slope Requirements. Slate shall be installed with minimum slopes in accordance with the manufacturer's printed installation instructions, but in no case shall slate be installed at slopes less than 4 in./ft (100 mm/305 mm).

38.9.10.3 Roof Deck Requirements. Roof decks shall be solidly sheathed, except where the roof assembly is specifically designed for a different system.

38.9.10.4 Underlayment Requirements.

38.9.10.4.1 Roof coverings designed to be applied to roofs with a minimum slope of 4 in./ft (100 mm/305 mm) shall have underlayment installed in accordance with 38.9.10.4.2.

38.9.10.4.2 Underlayments used beneath slate shingles shall meet the requirements of Type I or Type II of ASTM D 226, Type I or Type II of ASTM D 4869, or ASTM D 6757. Perforated underlayment shall not be permitted.

38.9.10.5* Ice Dam Protection. In regions where the average daily temperature in January is 30°F (–1°C) or less, a self-adhering, polymer modified bitumen sheet meeting the requirements of ASTM D 1970 shall be used as underlayment from the eave edge to a point at least 24 in. (610 mm) inward from the interior plane of the exterior wall.

38.9.10.6 Flashing Requirements.

38.9.10.6.1 Flashing and counterflashing shall be made of sheet metal.

38.9.10.6.2 Valley flashing shall be 15 in. (380 mm) minimum width.

38.9.10.6.3 Base metal (uncoated) valley and flashing metal shall be 0.0179 in. (0.5 mm) thick minimum G90 zinc-coated.

38.9.10.6.4 Where base flashings meet chimneys, stucco, or brick walls, a cap flashing of a minimum of two plies of 4 in. (100 mm) wide felt set in mastic, with the second ply extending 1 in. (25 mm) above the first, shall extend 2 in. (51 mm) over the base flashing.

38.9.10.7* Fastener Requirements. Fasteners shall be corrosion resistant.

38.9.11 Spray Polyurethane Foam Roofing.

38.9.11.1 Material Requirements. Spray polyurethane foam roofing shall comply with the requirements of the standards referenced in Table 38.9.11.1.

38.9.11.2* Slope Requirements. Spray polyurethane foam roofing shall slope at least ¼ in./ft (6.3 mm/305 mm) toward drains or roof eaves.

Copyright National Fire Protection Association
Provided by IHS under license with NFPA
No reproduction or networking permitted without license from IHS
Not for Resale

Table 38.9.11.1 Spray Polyurethane Foam Roofing Materials Standards

Material	Standard
Acrylic coatings used in roofing	ASTM D 6083
Liquid-applied coating	ASTM D 6694
Spray-applied polyurethane foam insulation	ASTM C 1029

38.9.11.3 Roof Deck Requirements. Roof decks shall be solidly sheathed, except where the roof assembly is specifically designed for a different system.

38.9.11.4 Flashing Requirements.

38.9.11.4.1 Flashing used for spray polyurethane foam roof assemblies shall be installed in accordance with the manufacturer's printed installation instructions and, where metal, shall be corrosion resistant.

38.9.11.4.2* The metal edge securement for spray polyurethane foam roof assemblies, except gutters, shall be tested, listed, and installed in accordance with FM 4435 or ANSI/SPRI ES-1.

38.9.11.5* Fastener Requirements. Fasteners shall be corrosion resistant.

38.9.11.6 Wind Requirements. Spray polyurethane foam roof assemblies shall be tested for wind resistance in accordance with one of the following applicable tests:

(1) FM 4470
(2) UL 580
(3) UL 1897

38.9.12 Single-Ply Roofing.

38.9.12.1 Material Requirements. Materials used within a single-ply roof assembly shall comply with the requirements of the standards referenced in Table 38.9.12.1.

Table 38.9.12.1 Single-Ply Roof Materials Standards

Material	Standard
Thermoplastic roof coverings	ASTM D 4434
Thermoplastic roof coverings	ASTM D 6878
Thermoplastic roof coverings	ASTM D 6754
Thermoplastic roof coverings	CAN/CGSB-37.54
Thermoset single-ply roof coverings	ASTM D 4637
Thermoset single-ply roof coverings	ASTM D 5019
Thermoset single-ply roof coverings	CGSB 37-GP-52M

38.9.12.2* Slope Requirements. Single-ply roof assemblies shall slope at least ¼ in./ft (6.3 mm/305 mm) toward drains or roof eaves.

38.9.12.3 Roof Deck Requirements. Roof decks shall be solidly sheathed, except where the roof assembly is specifically designed for a different system.

38.9.12.4 Flashing Requirements.

38.9.12.4.1 Flashing used for single-ply roof assemblies shall be installed in accordance with the manufacturer's printed installation instructions and, where metal, shall be corrosion resistant.

38.9.12.4.2* The metal edge securement for single-ply roof assemblies, except gutters, shall be tested, listed, and installed in accordance with FM 4435 or ANSI/SPRI ES-1.

38.9.12.5* Fastener Requirements. Fasteners shall be corrosion resistant.

38.9.12.6 Wind Requirements. Adhered sheet membrane and mechanically attached sheet membrane roof assemblies shall meet the tests specified in 38.9.12.6.1, and loose-laid ballasted roofs shall meet the prescriptive requirements in 38.9.12.6.2.

38.9.12.6.1 Tests.

38.9.12.6.1.1 Adhered sheet membrane roof assemblies shall be tested for wind resistance in accordance with one of the following applicable tests:

(1) FM 4470
(2) UL 580
(3) UL 1897

38.9.12.6.1.2 Mechanically attached sheet membrane roof assemblies shall be tested for wind resistance in accordance with FM 4470, UL 580, or UL 1897, whichever is applicable. The size of the test device shall be greater than two times the spacing between rows of roof cover fasteners and shall meet the requirement of the respective test. The test specimen shall not have less than two full spans and three rows of fasteners.

38.9.12.6.2* Prescriptive Requirements for Loose-Laid Ballasted Roofs. Loose-laid ballasted roofs shall be designed and installed in accordance with ANSI /SPRI RP-4 for roof slopes not exceeding 2 in./ft (51 mm/305 mm).

38.9.12.7 Impact-Resistance Requirements. Single-ply roof assemblies shall be tested for impact resistance in accordance with CGSB 37-GP-52M, *Roofing and Waterproofing Membrane, Sheet Applied, Elastomeric.*

38.9.13 Wood Shingles.

38.9.13.1 Material Requirements. Materials used for wood shingle roof coverings shall comply with the requirements of CSSB Grade 1, Grade 2, or Grade 3.

38.9.13.2 Slope Requirements. Wood shingles shall be installed with minimum slopes in accordance with the manufacturer's printed installation instructions, but in no case shall wood shingles be installed at slopes less than 3 in./ft (75 mm/305 mm).

38.9.13.3 Roof Deck Requirements. Roof decks shall be solidly sheathed, except where the roof assembly is specifically designed for a different system.

38.9.13.4 Underlayment Requirements.

38.9.13.4.1 Roof coverings designed to be applied to roofs with a minimum slope of 3 in./ft (75 mm/305 mm) shall have underlayment installed in accordance with 38.9.13.4.2.

38.9.13.4.2 Underlayments used beneath wood shingles shall meet the requirements of Type I or Type II of ASTM D 226, Type I or Type II of ASTM D 4869, or ASTM D 6757. Perforated underlayment shall not be permitted.

Copyright National Fire Protection Association
Provided by IHS under license with NFPA
No reproduction or networking permitted without license from IHS
Not for Resale

38.9.13.5* Ice Dam Protection. In regions where the average daily temperature in January is 30°F (–1°C) or less, a self-adhering, polymer modified bitumen sheet meeting the requirements of ASTM D 1970 shall be used as underlayment from the eave edge to a point at least 24 in. (610 mm) inward from the interior plane of the exterior wall.

38.9.13.6 Flashing Requirements. Flashing for wood shingles shall comply with the shingle manufacturer's requirements and 38.9.13.6.

38.9.13.6.1 Flashing shall be provided at the junctures of the roof and vertical surfaces.

38.9.13.6.2 Metal flashing shall be a minimum 0.019 in. (0.48 mm) thick and corrosion resistant.

38.9.13.6.3 Valley flashing shall extend 11 in. (280 mm) minimum each way from the valley centerline and have a splash diverter rib 1 in. (25 mm) high minimum at the centerline.

38.9.13.6.4 Joints shall not be overlapped less than 4 in. (100 mm).

38.9.13.6.5 Valley flashing shall include a 36 in. (915 mm) wide Type I underlayment the full length of the valley, in addition to other required underlayment.

38.9.13.6.6 Chimneys wider than 24 in. (610 mm) shall have crickets or saddles installed to divert water.

38.9.13.7 Fastener Requirements.

38.9.13.7.1 Fasteners used to attach wood shingles shall be corrosion resistant.

38.9.13.7.2 Roof deck penetrations of fasteners shall be a minimum of ¾ in. (19 mm), or, where the deck sheathing is less than ¾ in. (19 mm), penetration shall be through the sheathing.

38.9.13.7.3 Each shingle shall be attached with a minimum of two fasteners.

38.9.14 Wood Shakes.

38.9.14.1 Material Requirements. Materials used for wood shake roof coverings shall comply with the requirements of the standards referenced in Table 38.9.14.1.

38.9.14.2 Slope Requirements. Wood shakes shall be installed with minimum slopes in accordance with manufacturer's printed installation instructions, but in no case shall wood shakes be installed at slopes less than 4 in./ft (100 mm/305 mm).

Table 38.9.14.1 Wood Shake Roofing Materials Standards

Material	Standard
Preservative-treated, taper-sawn shakes of SYP, treated in accordance with AWPA C2	CSSB Grade 1 or Grade 2
Wood shakes of naturally durable wood	CSSB Grade 1
Wood shakes of naturally durable wood, FRT	CSSB Grade 1
Wood shakes of naturally durable wood, preservative treated	CSSB Grade 1
Wood shakes of naturally durable wood, taper sawn	CSSB Grade 1 or Grade 2

38.9.14.3 Roof Deck Requirements. Roof decks shall be solidly sheathed, except where the roof assembly is specifically designed for a different system.

38.9.14.4 Underlayment and Interlayment Requirements.

38.9.14.4.1 Roof coverings designed to be applied to roofs with a minimum slope of 4 in./ft (100 mm/305 mm) shall have underlayment or interlayment installed in accordance with 38.9.14.4.2 or 38.9.14.4.3.

38.9.14.4.2 Underlayments used beneath wood shakes shall meet the requirements of Type I or Type II of ASTM D 226, Type I or Type II of ASTM D 4869, or ASTM D 6757. Perforated underlayment shall not be permitted.

38.9.14.4.3 Interlayments used with wood shakes shall meet the requirements of ASTM D 226, Type I.

38.9.14.5* Ice Dam Protection. In regions where the average daily temperature in January is 30°F (–1°C) or less, a self-adhering, polymer modified bitumen sheet meeting the requirements of ASTM D 1970 shall be used as underlayment from the eave edge to a point at least 24 in. (610 mm) inward from the interior plane of the exterior wall.

38.9.14.6 Flashing Requirements. Flashing for wood shakes shall comply with the shake manufacturer's requirements and 38.9.14.6.

38.9.14.6.1 Flashing shall be provided at the junctures of the roof and vertical surfaces.

38.9.14.6.2 Metal flashing shall be a minimum 0.019 in. (0.48 mm) thick and corrosion resistant.

38.9.14.6.3 Valley flashing shall extend 11 in. (280 mm) minimum each way from the valley centerline and have a splash diverter rib 1 in. (25 mm) high minimum at the centerline.

38.9.14.6.4 Joints shall not be overlapped less than 4 in. (100 mm).

38.9.14.6.5 Valley flashing shall include a 36 in. (915 mm) wide Type I underlayment extending the full length of the valley, in addition to other required underlayment.

38.9.14.6.6 Chimneys wider than 24 in. (610 mm) shall have crickets or saddles installed to divert water.

38.9.14.7 Fastener Requirements.

38.9.14.7.1 Fasteners used to attach wood shakes shall be corrosion resistant.

38.9.14.7.2 Roof deck penetrations of fasteners shall be a minimum of ¾ in. (19 mm), or, where the deck sheathing is less than ¾ in. (19 mm), penetrations shall be through the sheathing.

38.9.14.7.3 Each shake shall be attached with a minimum of two fasteners.

38.10 Re-Roofing. Re-roofing shall comply with 15.4.2.4.

38.11 Light-Transmitting Plastic Roof Panels, Sloped Glazing, and Skylights.

38.11.1 General. Light-transmitting plastic roof panels, sloped glazing, and skylights shall be permitted in roof construction, provided that all of the following requirements are met:

(1) Openings through the roof are not required to be protected.

Copyright National Fire Protection Association
Provided by IHS under license with NFPA
No reproduction or networking permitted without license from IHS
Not for Resale

(2) The panels are located a minimum of 25 ft (7620 mm) from fire walls.
(3) The panels are located a minimum of 6 ft (1830 mm) from exterior walls that are required to be fire barrier walls.

38.11.2 Structural Loads. Light-transmitting plastic roof panels, sloped glazing, and skylights shall resist dead, snow, and wind loads as required by Chapter 35 or 46.10.2 (glass only).

38.11.3 Light-Transmitting Plastics.

38.11.3.1 Light-transmitting plastics used as roof panels shall meet the requirements of Chapter 48.

38.11.3.2 Light-transmitting plastics used as glazing in skylights or as sloped glazing shall meet the requirements of Chapter 48.

38.11.4 Glass. Glass used in skylights or as sloped glazing shall meet requirements of Sections 46.5 and 46.8.

Chapter 39 Flood-Resistant Design and Construction

39.1* General. Buildings and structures shall be designed and constructed to resist the effects of flood hazards and flood loads.

39.1.1 Applicability. The requirements of this chapter shall apply to the following:

(1) New construction of buildings and structures located wholly or partly within the flood hazard area established in 39.4.2
(2) Substantial improvements and restoration of substantial damage of existing buildings and structures located wholly or partly within the flood hazard area established in 39.4.2

39.1.2 Conflicts with Fire Safety Provisions. For areas below the design flood elevation, where conflicts arise between the flood-resistance provisions of this chapter and the fire safety provisions of Chapters 7, 8, and 55, the fire safety provisions shall govern.

39.2 Special Definitions. A list of special terms used in this chapter follows.

39.2.1 Area.

39.2.1.1 Flood Hazard Area. The greater of either (1) the special flood hazard area shown on the flood insurance rate map, or (2) the area subject to flooding during the design flood and shown on a jurisdiction's flood hazard map, or otherwise legally designated.

39.2.1.2 Special Flood Hazard Area. The land area subject to flooding by the base flood, and depicted on the flood insurance rate map or other flood hazard map as Zone A, Zone AE, Zone A1-30, Zone A99, Zone AO, Zone AR, Zone AH, Zone V, Zone VE, Zone V1-30, or Zone VO.

39.2.2 Basement (Flood Resistance). For all matters related to flood-resistant design and construction, the portion of a building having its floor below ground level on all sides.

39.2.3 Building.

39.2.3.1 Existing Building (Flood Resistance). For all matters related to flood-resistant design and construction, a building for which the *start of construction* commenced before the effective date of the jurisdiction's first floodplain management ordinance, code, or standard.

39.2.3.2 Historic Building (Flood Resistance). A building or structure that is (1) listed or preliminarily determined to be eligible for listing in the National Register of Historic Places, or (2) determined by the secretary of the U.S. Department of Interior as contributing to the historical significance of a registered historic district or a district preliminarily determined to qualify as an historic district, or (3) designated as historic under a state or local historic preservation program approved by the U.S. Department of Interior.

39.2.4 Development (Flood Resistance). Any man-made changes to improved or unimproved real estate including, but not limited to, buildings or other structures, temporary or permanent storage of materials, mining, dredging, filling, grading, paving, excavation, drilling, or other land-disturbing activities.

39.2.5 Dry Floodproofing. A combination of design modifications that result in a building or structure, including the attendant utility and sanitary facilities, being watertight, with walls substantially impermeable to the passage of water, and with structural components having the capacity to resist loads and load combinations associated with the design flood.

39.2.6 Flood. A general and temporary condition of partial or complete inundation of normally dry land by either (1) the overflow of inland or tidal waters, or (2) the rapid accumulation of surface waters from any source.

39.2.6.1 Base Flood. The flood having a 1 percent chance of being equaled or exceeded in any given year.

39.2.6.2 Design Flood. The greater of either (1) the base flood or (2) the flood so designated by the jurisdiction as its regulatory flood, with a 1 percent chance, or less, of being equaled or exceeded in any given year.

39.2.7 Flood Damage–Resistant Material. Any construction material capable of direct and prolonged contact with floodwaters, without sustaining any damage that requires more than cosmetic repairs.

39.2.8 Flood Elevation.

39.2.8.1 Base Flood Elevation (BFE). The elevation of the base flood, including wave height, relative to the datum specified on a jurisdiction's flood hazard map.

39.2.8.2 Design Flood Elevation (DFE). The elevation of the design flood, including wave height, relative to the datum specified on a jurisdiction's flood hazard map.

39.2.9 Flood Insurance Study. An official report provided to a jurisdiction by the Federal Emergency Management Agency, which accompanies the flood insurance rate map and flood boundary and floodway map, and provides the water surface elevation of the base flood, along with supporting technical data.

39.2.10 Flood Load. See ASCE/SEI 7, *Minimum Design Loads for Buildings and Other Structures,* Section 5.0.

39.2.11 Floodway. *(Also known as Regulatory Floodway).* The channel of a river, creek, or other watercourse, and the adjacent land area, that must be reserved in order to pass the base flood discharge without cumulatively raising the water surface elevation more than a designated height.

39.2.12 Functionally Dependent Facility (Flood Resistance). For all matters related to flood-resistant design and construction, any facility that cannot be used for its intended purpose unless it is located or carried out in close proximity to water. *Functionally Dependent Facility* shall include docking or port facilities necessary

Copyright National Fire Protection Association
Provided by IHS under license with NFPA
No reproduction or networking permitted without license from IHS
Not for Resale

for the loading or unloading of cargo or passengers, shipbuilding, or ship repair, but shall not include long-term storage, manufacture, sales, or service facilities.

39.2.13* Grade (Ground Level, Flood Resistance). For all matters related to flood-resistant design and construction, the elevation of the natural or graded ground surface, or fill, adjacent to the walls of a building or structure.

39.2.14 High-Velocity Wave Action (Flood Resistance). Condition present during the base flood where wave heights are greater than or equal to 36 in. (915 mm) or where wave run-up elevations exceed 36 in. (915 mm) above grade. Areas subject to high velocity wave action are designated on the flood insurance rate map or flood hazard map as Zone V, Zone VE, Zone VO, or Zone V1-30.

39.2.15 Lowest Floor (Flood Resistance). For all matters related to flood-resistant design and construction, the floor of the lowest enclosed area of a building or structure. An unfinished or flood-resistant enclosure used solely for vehicle parking, building access, or limited storage shall not be considered the lowest floor, provided the enclosed area is not constructed so as to render the building or structure in violation of the flood-related provisions of this chapter.

39.2.16 Manufactured Home (Flood Resistance). For all matters related to installation or erection in flood hazard areas: (1) a structure, transportable in one or more sections, built on a chassis and designed to be used as a dwelling with or without a permanent foundation, when connected to the required utilities, and constructed to the Federal Manufactured Home Construction and Safety Standards and rules and regulations promulgated by the U.S. Department of Housing and Urban Development; (2) a mobile home, park trailer, travel trailer, and similar transportable structure that is placed on a site for 180 consecutive days or longer.

39.2.17 Manufactured Home Park or Subdivision (Flood Resistance). A parcel, or contiguous parcels, of land divided into two or more manufactured home lots.

39.2.18 Map.

39.2.18.1 Flood Boundary and Floodway Map (FBFM). An official map of a jurisdiction on which the Federal Emergency Management Agency has delineated flood hazard zones and floodway boundaries for the jurisdiction.

39.2.18.2 Flood Hazard Boundary Map (FHBM). An official map of a jurisdiction, on which FEMA has delineated special flood hazard areas for the jurisdiction.

39.2.18.3 Flood Hazard Map. A map delineating the flood hazard area and adopted by a jurisdiction.

39.2.18.4 Flood Insurance Rate Map (FIRM). An official map of a jurisdiction, on which FEMA has delineated special flood hazard areas and risk premium zones applicable to the jurisdiction. The term *flood insurance rate map* shall include the flood boundary and floodway map, and the flood hazard boundary map.

39.2.19 Regulatory Floodway. See 39.2.11, Floodway.

39.2.20 Start of Construction (Flood Resistance). For all matters related to flood-resistant design and construction, the date of permit issuance for new construction or substantial improvements to an existing structure, provided the actual start of construction, repair, reconstruction, rehabilitation, addition placement, or other improvement is within 180 days after the date of issuance.

39.2.20.1* Actual Start of Construction (Flood Resistance). For all matters related to flood-resistant design and construction, the first placement of permanent construction of a building (including a manufactured home) on a site, such as the pouring of a slab or footings, installation of pilings, or construction of columns. Permanent construction does not include land preparation (such as clearing, excavation, grading or filling); or the installation of streets and walkways; or the excavation for a basement, footings, piers, or foundations; or the erection of temporary forms; or the installation of accessory buildings such as garages or sheds not occupied as dwelling units and not part of the main building. For a substantial improvement, the actual start of construction means the first alteration of any wall, ceiling, floor, or other structural part of the building, whether or not that alteration affects the exterior dimensions of the building.

39.2.21 Structure (Flood Resistance). For all matters related to flood-resistant design and construction, a walled and roofed building, a gas or liquid storage tank that is principally above ground, as well as a manufactured home.

39.2.22 Substantial Damage (Flood Resistance). For buildings and structures located wholly or partly within the flood hazard area, damage of any origin whereby the cost of restoring the building or structure to its pre-damage condition would equal or exceed 50 percent of the market value of the building or structure.

39.2.23 Substantial Improvement (Flood Resistance). For buildings and structures located wholly or partly within the flood hazard area: (1) any repair, addition, reconstruction, rehabilitation, or improvement of the building or structure, the cost of which equals or exceeds 50 percent of the market value of the building or structure before the alteration is started; or (2) if a building or structure has sustained substantial damage, any repairs or reconstruction regardless of the actual work performed. *Substantial improvement* shall not include the following: (1) any project or improvement of a building or structure required to correct existing health, sanitary or safety code violations identified by the authority having jurisdiction, and that are the minimum necessary to assure safe living conditions; (2) any alteration of a historic building or structure, provided that the alteration will not preclude the continued designation as a historic building or structure.

39.2.24 Variance (Flood Resistance). A grant of relief from a provision or provisions of this *Code*, which permits construction in a manner that would otherwise be prohibited.

39.3 Design Flood.

39.3.1 Flood Frequency.

39.3.1.1 The design flood shall have a 1 percent chance or less of being equaled or exceeded in any given year.

39.3.1.2 The design flood shall be equivalent to, or more severe than, the base flood.

39.3.2* Design Flood Elevation (DFE).

39.3.2.1 The design flood elevation shall be equivalent to the elevation of the design flood, including wave height, relative to the datum specified on a jurisdiction's flood hazard map or otherwise legally designated.

Copyright National Fire Protection Association
Provided by IHS under license with NFPA
No reproduction or networking permitted without license from IHS
Not for Resale

39.3.2.2 The DFE shall be equivalent to, or higher than, the base flood elevation (BFE).

39.3.2.3 Where BFE data have not been provided in accordance with 39.4.2, the authority having jurisdiction shall obtain and reasonably utilize available flood elevation and floodway data from federal, state, and other sources.

39.4 Flood Hazard Area.

39.4.1 Description.

39.4.1.1 The flood hazard area shall be the greater of either of the following:

(1) Special flood hazard area designated by the Federal Emergency Management Agency (FEMA) on the jurisdiction's most recent flood insurance rate map (FIRM)
(2) Area subject to flooding during the design flood and shown on a jurisdiction's flood hazard map, or otherwise legally designated area

39.4.1.2 The flood hazard area shall be equivalent to, or larger than, the special flood hazard area.

39.4.2 Establishment of Flood Hazard Area. The flood hazard area shall be established by the jurisdiction through the adoption of a flood hazard map and supporting studies, including one of the following:

(1) Most recent flood insurance rate map (FIRM) and flood insurance study
(2) Most recent maps and studies adopted by the jurisdiction for a flood with less than a 1 percent chance of being equaled or exceeded in any given year

39.5 Performance During the Design Flood.

39.5.1 Goals and Objectives. Building performance during the design flood shall be in accordance with the goals and objectives stated in Section 4.1.

39.5.2 Design Loads. Buildings shall be designed to withstand the loads specified in Section 35.12 and the load combinations specified in Section 35.15.

39.5.3 Construction Methods and Practices. Construction methods and practices shall minimize flood damages during the design flood.

39.5.4 Structural Response. Buildings and structures shall resist flotation, collapse, and permanent lateral movement during the design flood.

39.5.5* Flood Damage–Resistant Materials. Buildings and structures within a flood hazard area shall be constructed with materials resistant to flood damage below the design flood elevation.

39.5.6 Systems Effectiveness. Building systems and equipment shall be designed or located, or both designed and located, so as to prevent flood waters from entering or accumulating within the components during design flood conditions.

39.6 Design and Construction Requirements.

39.6.1 General Requirements. Buildings and structures shall be designed and constructed in accordance with ASCE/SEI 24, *Flood Resistant Design and Construction*.

39.6.2 Multiple Flood Hazard Zones. For buildings that lie in more than one flood hazard zone as established by 39.4.2, the entire building shall be designed and constructed to meet the elevation, foundation, and other flood requirements associated with the most hazardous zone.

39.6.3 Design Professional Required. A registered design professional shall develop or review, or both develop and review, the structural design, specifications, and plans for the construction of new buildings and structures, and the substantial improvement of existing buildings and structures, under the following conditions:

(1) Where the building or structure is located, in whole or in part, in a flood hazard area subject to high-velocity wave action
(2) Where a nonresidential or multiple occupancy building or structure is located, in whole or in part, in a flood hazard area not subject to high-velocity wave action and is proposed to be dry-floodproofed

39.7 Lowest Floor Elevation. The lowest floor elevation shall be determined in accordance with one of the following:

(1) Buildings and structures shall have the lowest floor, including the basement, elevated to or above the design flood elevation, as required by Sections 2.3 and 4.4 of ASCE/SEI 24.
(2) Nonresidential and multiple occupancy buildings and structures, as defined by 39.11.1.2.1 and 39.11.1.2.3, shall be permitted to have the lowest floor below the design flood elevation if the building is dry-floodproofed in accordance with 39.11.1.2.1.

39.7.1 Flood Hazard Areas Not Subject to High-Velocity Wave Action. The elevation of the lowest floor shall be measured at the top of the floor.

39.7.2 Flood Hazard Areas Subject to High-Velocity Wave Action. The elevation of the lowest floor shall be measured at the bottom of the lowest horizontal structural member supporting the lowest floor.

39.8 Foundations. Foundations shall be designed and constructed as required by 1.5.3 of ASCE/SEI 24.

39.8.1 Flood Hazard Areas Not Subject to High-Velocity Wave Action. The use of structural fill, slabs-on-ground, foundation walls, piers, posts, columns, and piles shall be permitted.

39.8.2 Flood Hazard Areas Subject to High-Velocity Wave Action. The use of piers, posts, columns, and piles shall be permitted. The use of structural fill, slabs-on-ground, and foundation walls shall be prohibited.

39.9* Materials. Materials below the design flood elevation shall be flood damage–resistant and shall comply with the requirements of Section 5 of ASCE/SEI 24.

39.10* Systems. Fire protection, electrical, mechanical, and plumbing systems and equipment, and related ductwork, shall be designed or located, or both, so as to prevent flood waters from entering or accumulating within the components during design flood conditions, as required by Section 7 of ASCE/SEI 24.

39.11 Enclosures Below the Design Flood Elevation.

39.11.1 Areas Not Subject to High-Velocity Wave Action.

39.11.1.1* Flood Openings. Walls forming enclosed areas below the lowest floor shall be equipped with flood openings that allow the automatic entry and exit of floodwaters. The following types of flood openings shall be permitted:

(1) Flood openings complying with the requirements of 2.6.2.1 of ASCE/SEI 24, for which the certification of 39.12.3.1.1 shall not be required

Copyright National Fire Protection Association
Provided by IHS under license with NFPA
No reproduction or networking permitted without license from IHS
Not for Resale

(2) Flood openings complying with the requirements of 2.6.2.2 and 4.6.2 of ASCE/SEI 24, for which the certification of 39.12.3.1.1 shall be required

39.11.1.2* Floodproofing. Buildings and structures shall be permitted to be floodproofed in accordance with Section 6 of ASCE/SEI 24.

39.11.1.2.1 For all matters related to flood-resistant design and construction, the following occupancies shall be considered nonresidential-type occupancies, and dry floodproofing of the occupancies meeting the certification requirements of 39.12.3.1.2 of this *Code* and 6.2 of ASCE/SEI 24 shall be permitted:

(1) Assembly
(2) Educational
(3) Day care
(4) Ambulatory health care
(5) Mercantile
(6) Business
(7) Industrial
(8) Storage

39.11.1.2.2 For all matters related to flood-resistant design and construction, the following occupancies shall be considered residential-type occupancies, and dry floodproofing of the occupancies shall be prohibited:

(1) Health care
(2) Detention and correctional
(3) One- and two-family dwellings
(4) Lodging or rooming houses
(5) Hotels and dormitories
(6) Apartments
(7) Residential board and care

39.11.1.2.3 Multiple occupancy buildings or structures shall be permitted to be dry-floodproofed, provided that the following criteria are met:

(1) The occupancies in 39.11.1.2.2 are located above the design flood elevation.
(2) The requirements of 6.2 of ASCE/SEI 24 are met.
(3) The certification requirements of 39.12.3.1.2 are met.

39.11.2* Areas Subject to High-Velocity Wave Action. The space below the lowest floor shall be free of obstructions. Areas below the lowest floor shall be permitted to be enclosed with nonsupporting breakaway walls; open wood lattice; or insect screening intended to collapse under wind and flood loads without causing collapse, displacement, or structural damage to the elevated portion of the building or supporting foundation system.

39.11.2.1* Breakaway Wall Design. Where walls and partitions located below the DFE in areas subject to high-velocity wave action are required to break away, such walls and their connections to the structure shall be designed for the greatest of the following loads, acting perpendicular to the plane of the wall:

(1) Wind load specified in Section 35.9
(2) Seismic load specified in Section 35.10
(3) 10 psf (0.5 kN/m^2)

39.11.2.2 Breakable Walls Designed to Fail at 20 psf (1 kN/m^2). Breakaway walls that are designed to fail at loads greater than 20 psf (1 kN/m^2) shall not be used, unless the design meets the conditions of certification specified in 39.12.3.2.2.

39.11.2.3 Utility Lines and Equipment. Utility lines and equipment shall not be attached to, pass through, or be included in breakaway construction.

39.12 Documentation.

39.12.1 Site Plan Requirements. Prior to the commencement of any development on a parcel containing flood hazard areas as established by 39.4.2, and in addition to the requirements of 1.7.6.3, the applicant shall submit the following for approval:

(1) For other than one- and two-family dwellings, if the proposed building or structure is located wholly or partly within the flood hazard area established by 39.4.2, the locations and quantities associated with any filling, excavation, and grading shall be shown.
(2) The flood hazard zones and boundaries, floodway boundaries, and design flood elevations shown on the flood hazard map adopted by the jurisdiction, or otherwise legally adopted by the jurisdiction, shall be submitted.
(3) If the proposed building or structure is located wholly or partly within the flood hazard area, the lowest floor elevation shall be shown, along with the natural and final ground elevations adjacent to the footprint of the building or structure.

39.12.2 Construction Documents. Construction documents for buildings and structures shall comply with 35.4.2.6.2.

39.12.3 Flood Hazard Certifications.

39.12.3.1 Flood Hazard Areas Not Subject to High-Velocity Wave Action. The certifications specified in 39.12.3.1.1 through 39.12.3.1.3 shall be submitted to the authority having jurisdiction for new construction, substantial improvements, and restoration of substantial damage, and the authority having jurisdiction shall keep these as part of its permanent records.

39.12.3.1.1 Flood Opening Certification. For fully enclosed areas below the DFE not meeting the flood opening requirements of 2.6.2.1 of ASCE/SEI 24, a registered architect or licensed engineer shall prepare a certification that the flood openings will allow for the automatic entry and exit of floodwaters, will allow the equalization of hydrostatic forces, and will meet the requirements of 2.6.2.2 and 4.6.2 of ASCE/SEI 24.

39.12.3.1.2 Floodproofing Certification. For nonresidential or multiple occupancy structures dry-floodproofed below the DFE, a registered design professional shall, using the certificate specified by the authority having jurisdiction, certify that the design and methods of construction are in accordance with accepted standards of practice for meeting the dry floodproofing provisions of 6.2 of ASCE/SEI 24. The elevation to which the structure is floodproofed shall be included on the certification. Elevations in the certification shall be referenced to the datum shown on the flood hazard map specified in 39.4.2.

39.12.3.1.3 Elevation Certification. An elevation certificate specified by the authority having jurisdiction shall be completed by a licensed or registered professional authorized by law to certify elevation information. The certificate shall include the lowest floor elevation, the lowest elevation of machinery and equipment servicing the building, adjacent grade elevations, and flood opening information. The certificate shall be submitted as required by 1.7.6.6.3.4(C) and 1.7.6.6.3.4(N)(5). Elevations shown on the certificate shall be referenced to the datum shown on the flood hazard map specified in 39.4.2.

Copyright National Fire Protection Association
Provided by IHS under license with NFPA
No reproduction or networking permitted without license from IHS
Not for Resale

39.12.3.2 Flood Hazard Areas Subject to High-Velocity Wave Action. The certifications described in 39.12.3.2.1, 39.12.3.2.2, and 39.12.3.2.3 shall be submitted to the authority having jurisdiction for new construction, substantial improvements, and restoration of substantial damage.

39.12.3.2.1 Design Certification. A registered design professional shall certify the following:

(1) The design and methods of construction to be used are in accordance with accepted standards of practice.
(2) The bottom of the lowest horizontal structural member of the lowest floor (excluding the pilings or columns) is elevated to or above the DFE.
(3) The pile or column foundation and structure attached thereto are anchored to resist flotation, collapse, and permanent lateral movement due to the effects of the load combinations specified in Section 35.15.

39.12.3.2.2 Breakaway Wall Certification. For areas subject to high-velocity wave action, breakaway walls below the DFE that are designed to fail at loads greater than 20 psf (1 kN/m^2), acting perpendicular to the wall, shall be certified to meet the following criteria by a registered design professional:

(1) The breakaway wall is designed to collapse from a flood load less than that which will occur during the base flood.
(2) The elevated portion of the structure and the supporting foundation system will resist collapse, displacement, or other structural damage due to the effects of the load combinations specified in Section 35.15.

39.12.3.2.3 Elevation Certification. An elevation certificate specified by the authority having jurisdiction shall be completed by a licensed or registered professional authorized by law to certify elevation information. The certificate shall contain the lowest floor elevation, the lowest elevation of machinery and equipment servicing the building, adjacent grade elevations, and flood opening information. The certificate shall be submitted as required by 1.7.6.6.3.4(C) and 1.7.6.6.3.4(N)(5). Elevations shown on the certificate shall be referenced to the datum shown on the flood hazard map specified in 39.4.2.

39.13 Existing Structures.

39.13.1 General. For buildings and structures located wholly or partly within the flood hazard area established by 39.4.2, and undergoing substantial improvement or restoration of substantial damage, all aspects of the buildings and structures shall be brought into compliance with the requirements of this chapter for new construction and Chapter 15.

39.13.2 Historic Structures. Historic structures shall comply with 15.10.1.3.

39.14 Manufactured Housing.

39.14.1 Foundation. All new and replacement manufactured homes located wholly or partly within the flood hazard area established by 39.4.2, including substantial improvements and restoration of substantial damage, shall be installed on a foundation that is designed and constructed in accordance with Section 39.8.

39.14.2 Elevation. All new, replacement, and substantially improved manufactured homes, located wholly or partly within the flood hazard area established by 39.4.2, shall be elevated such that the lowest floor of the manufactured home is at or above the design flood elevation.

39.14.3 Installation and Anchoring. All new, replacement, and substantially improved manufactured homes, located wholly or partly within the flood hazard area established by 39.4.2, shall be installed using methods that minimize flood damage and shall be securely anchored to a foundation satisfying the provisions of 39.14.1. These requirements shall be in addition to the manufacturer's specifications and applicable state and local anchoring requirements for resistance to wind loads.

39.15 Temporary Structures. Where temporary structures are proposed for flood hazard areas, the authority having jurisdiction shall consider the following issues before granting or conditioning the special permit required by 1.7.6.1.1.5:

(1) Flood warning time necessary to allow removal or relocation of the structure in the event of a flood
(2) Location of the proposed structure relative to any floodways, alluvial fan areas, or areas subject to high-velocity wave action

Chapter 40 Quality Assurance During Construction

40.1 General.

40.1.1 Scope. The requirements in this chapter provide minimum standards for quality assurance of materials, fabrication, and construction of select components, assemblies, and systems for applicable structures that are designed by one or more registered design professionals.

40.1.2 Purpose. The purpose of this chapter is to provide greater confidence to the responsible registered design professionals (RDPs), the owner, and the authority having jurisdiction that materials, fabrication, and construction regulated by this chapter comply with the design, as delineated in the approved construction documents

40.1.3 Special Definitions. A list of special terms used in this chapter follows.

40.1.3.1 Fabricator. The entity performing off-site manufacture or assembly, or both, of construction components or systems.

40.1.3.2 Inspection Agent. A qualified company or individual assigned to execute the tests and special inspections required by the quality assurance program.

40.1.3.3 Quality Assurance. The procedures conducted by the RDPs responsible for design and the RDPs responsible for inspection that provide evidence and documentation to the RDPs, the owner, and authority having jurisdiction that the work is being constructed in accordance with the approved construction documents.

40.1.3.4 Quality Assurance Plan. Written documentation of the tests, special inspections, and observations to be performed in the quality assurance program.

40.1.3.5 Quality Assurance Program. A predefined set of observations, special inspections, tests, and other procedures that provide an independent record to the owner, authority having jurisdiction, and RDP responsible for design that the construction is in general conformance with the approved construction documents.

40.1.3.6 Quality Control Program. The operational procedures provided by the contractor to control the quality of the work and ensure compliance with the approved construction documents.

Copyright National Fire Protection Association
Provided by IHS under license with NFPA
No reproduction or networking permitted without license from IHS
Not for Resale

40.1.3.7 Registered Design Professional (RDP). An individual who is registered or licensed to practice his/her respective design profession as defined by the statutory requirements of the professional registration laws of the state or jurisdiction in which the project is to be constructed.

40.1.3.8 Special Inspection. Inspection performed by inspection agents under the direction of the RDP responsible for inspection to assure conformance to the approved construction documents. Inspection required by Chapter 1 is not included.

40.1.3.9 Sprayed Fire-Resistive Material. A cementitious or fibrous material that is spray-applied to structural elements, walls, floors, and roofs to provide fire-resistive protection.

40.1.3.10 Structural Observation. The periodic observation of the structural portions of the construction by the RDP responsible for design or another RDP designated by the RDP responsible for design, to determine if the work is proceeding in general conformance to the approved construction documents. Structural observation does not include, or waive the requirements for, any inspection required by this *Code*.

40.2 Extent of Quality Assurance.

40.2.1 Definition of Quality Assurance. For the purposes of this chapter, the term *quality assurance* shall be as defined in 40.1.3.3.

40.2.2 Responsibility for Quality Assurance. The RDP responsible for design shall determine the frequency and extent of the applicable tests, inspections, and observations required in this chapter.

40.2.3 Structures Requiring Quality Assurance.

40.2.3.1 General. A quality assurance program shall be required for structures, components, assemblies, or systems that are required to be designed by an RDP.

40.2.3.2 Exceptions. Unless otherwise required by the authority having jurisdiction, the following shall not be required to comply with the provisions of this chapter:

(1) Detached one- and two-family dwellings
(2) Buildings in Occupancy Category I of Table 35.3.1

40.2.3.3* Quality Assurance Programs in Seismic Design Category C through Seismic Design Category F.

40.2.3.3.1 In addition to the requirements in this chapter, the quality assurance program for structures and components assigned to Seismic Design Category C through Seismic Design Category F shall comply with the provisions of 40.2.3.3.

40.2.3.3.2 The quality assurance plan shall, as a minimum, identify and address the following:

(1) Seismic force–resisting systems and designated seismic systems that are subject to quality assurance
(2) Type and frequency of testing and inspections that are required for each of the seismic force–resisting systems and designated seismic systems
(3) Frequency and distribution of test and inspection reports
(4) Structural observations to be performed and frequency and distribution of structural observation reports

40.2.3.4 Quality Assurance Programs in High Wind Zones.

40.2.3.4.1 In addition to the requirements in this chapter, structures assigned to the following wind exposure categories shall comply with the quality assurance requirements of 40.2.3.4.2:

(1) Wind Exposure Category B, where the basic wind speed is 120 mph (54 m/s) or greater
(2) Wind Exposure Category C and Wind Exposure Category D, where the basic wind speed is 110 mph (49 m/s) or greater

40.2.3.4.2 The quality assurance plan shall, as a minimum, identify and address the following:

(1) Main wind force–resisting systems that are subject to quality assurance
(2) Type and frequency of testing and inspections that are required for each of the wind force–resisting systems
(3) Frequency and distribution of test and inspection reports
(4) Structural observations to be performed and frequency and distribution of structural observations reports

40.2.4 Structures, Components, Assemblies, and Systems Not Requiring a Quality Assurance Program. A quality assurance program shall not be required for the following structures, components, assemblies, and systems:

(1) Individual spread concrete footings that are supported on earth or rock in buildings three stories or less in height
(2) Continuous concrete footings supporting walls that are supported on earth or rock in buildings three stories or less in height and meeting the requirements of both of the following:
    (a) The footings support walls of light-frame construction.
    (b) The structural design is based on a f'_c not greater than 2500 psi (17.2 MN/m^2).
(3) Nonstructural concrete slabs supported directly on the ground, including prestressed slabs on grade, where the effective prestress in the concrete is less than 150 psi (1.05 MN/m^2)
(4) Concrete or masonry foundation walls constructed in accordance with 36.6.2
(5) Concrete patios, driveways, and sidewalks on grade

40.2.5 Involvement of the Owner and Registered Design Professionals.

40.2.5.1 The owner shall directly or indirectly retain the RDPs responsible for design to prepare a quality assurance plan and to provide observations.

40.2.5.2 The owner shall also directly or indirectly retain an RDP responsible for inspection to implement a quality assurance program that reflects the requirements of the quality assurance plan and this chapter.

40.2.5.3 Each RDP responsible for the design of components, assemblies, or systems governed by this chapter shall prepare a quality assurance plan for those parts of the design for which the RDP has design responsibility, or for which the RDP develops criteria for design to be performed by others.

40.2.5.4 The RDP responsible for inspection shall implement and monitor the quality assurance program in conformance to the quality assurance plan.

40.2.5.5 The RDP responsible for design shall be permitted to function as the RDP responsible for inspection or designate another RDP to perform that function.

40.2.6 Responsibilities of the Contractor.

40.2.6.1 The contractor shall provide a quality control program for the construction regulated under this chapter.

Copyright National Fire Protection Association
Provided by IHS under license with NFPA
No reproduction or networking permitted without license from IHS
Not for Resale

40.2.6.2 Quality assurance and its implementation shall not relieve contractors of their responsibilities for quality control of the construction, for compliance with the project construction documents, or for any design for which the contractor is responsible.

40.2.6.3 Wherever owners reserve a quality control procedure in the construction documents for themselves, such a quality control procedure shall be made part of the required quality assurance program and shall be monitored by the RDP responsible for inspection.

40.2.7 Building Permit. The quality assurance plan shall be submitted to the authority having jurisdiction by the permit applicant as a condition for issuance of a building permit.

40.2.8 Reports. As fabrication and construction progress, special inspection reports and records of tests and inspections shall be forwarded to the RDP responsible for inspection for review and approval.

40.2.8.1 The RDP responsible for inspection shall maintain all test and special inspection records, distribute them in accordance with the quality assurance plan, and make them available to the authority having jurisdiction in the manner requested by the authority having jurisdiction. The RDP shall not be required to maintain any test or inspection records for more than 1 year after either the issuance of the applicable certificate of occupancy or the termination of the RDP's services, whichever occurs first.

40.2.8.2 The RDP responsible for inspection shall note any unresolved construction deficiencies in writing to the authority having jurisdiction, to the owner, and to all other parties as required by the quality assurance plan.

40.2.9 Remedial Action.

40.2.9.1 When deviations from design requirements that require remedial action are determined during tests, inspections, or observations, the deviations shall be promptly reported to the contractor and the RDP responsible for inspection.

40.2.9.2 If the contractor fails to have required corrective action performed, such lack of action shall be reported to the authority having jurisdiction and the owner.

40.2.10 Final Quality Assurance Report. Prior to issuance of a certificate of occupancy, each RDP responsible for inspection shall submit to the authority having jurisdiction, to the RDP responsible for design, and to the owner a final report stating that the quality assurance program has been completed and identifying any deficiencies reported to the authority having jurisdiction that, to the best knowledge of the RDP responsible for inspection, have not been rectified.

40.2.11 Deferred Submittals.

40.2.11.1 The RDP responsible for design shall identify all deferred submittal items in the quality assurance plan submitted with the application for permit.

40.2.11.2 The RDP responsible for design shall review construction documents for all deferred submittal items for general conformance to the RDP's design and shall include them in the quality assurance program.

40.3 Quality Assurance for Structural and Geotechnical Components and Assemblies.

40.3.1 Tests, Special Inspections, and Structural Observations.

40.3.1.1 The quality assurance plan for materials, fabrication, and construction shall include the tests, special inspections, and structural observations required by Section 40.3.

40.3.1.2 The owner shall directly or indirectly retain all inspection agents assigned to execute the specific tests and special inspections required by Chapter 40.

40.3.1.3 Each agent performing tests and special inspections required by Chapter 40 shall be qualified to the satisfaction of the authority having jurisdiction for the particular type of construction and operation being performed.

40.3.1.4 The tests, special inspections, and structural observations specified in 40.3.1.1 shall be performed in addition to those required in Chapter 1.

40.3.2 Structural Observations.

40.3.2.1 The owner shall directly or indirectly employ the RDP responsible for design to perform structural observations.

40.3.2.2 The structural observer shall conduct site visits as required by the quality assurance plan, observe the construction, and verify that required tests and special inspections are being performed.

40.3.2.3 Observed deficiencies shall be reported in writing to the owner, to the authority having jurisdiction, and to all other parties as required by the quality assurance plan.

40.3.3 Tests and Special Inspections. The quality assurance plan shall include a list of tests, special inspections, and structural observations that are to be conducted during fabrication and installation under the quality assurance program in accordance with the provisions in this chapter.

40.3.3.1 The quality assurance plan shall include the following:

(1) Complete list of materials and work requiring tests and special inspections
(2) Tests and special inspections to be performed
(3) Frequency and extent of tests and inspections
(4) Frequency and distribution of inspection and test reports
(5) Frequency and extent of structural observations

40.3.3.2 Tests and inspections shall include those indicated in Section 40.3, as well as Table 40.3.5.1, Table 40.3.5.2, Table 40.3.6(a), Table 40.3.6(b), Table 40.3.7, Table 40.3.8, Table 40.3.10(a), Table 40.3.10(b), and Table 40.3.11, as applicable.

40.3.4 Inspection of Fabricators. Where fabrication of structural components or assemblies is being performed in an offsite facility, fabricators shall be inspected as specified in 40.3.4.1 and 40.3.4.2.

40.3.4.1 Inspection Prior to Fabrication. The inspection agent shall verify that fabricators designated for the project maintain quality control procedures that assure the fabricator's ability to conform to approved construction documents.

40.3.4.1.1 Inspection prior to fabrication shall be permitted to be waived by the RDP responsible for design, provided that the designated fabricator maintains an agreement with an approved independent inspection or quality control agency that conducts periodic in-plant inspections at the fabricator's plant on a schedule that ensures the fabricator's ability to conform to approved construction documents.

40.3.4.1.2 The waiver permitted by 40.3.4.1.1 shall not eliminate the requirement for structural inspection during fabrication in accordance with 40.3.4.2.

Copyright National Fire Protection Association
Provided by IHS under license with NFPA
No reproduction or networking permitted without license from IHS
Not for Resale

40.3.4.2 Inspection During Fabrication.

40.3.4.2.1 During fabrication, the inspection agent shall confirm that the fabricator is executing the quality control procedures and producing a product that conforms to approved construction documents.

40.3.4.2.2 Structural tests and inspections during fabrication shall be permitted to be reduced, at the option of the RDP responsible for design, provided that the fabricator meets the requirements of 40.3.4.1.1.

40.3.4.2.3 Inspection prior to fabrication shall be permitted to be waived by the authority having jurisdiction, provided that the authority having jurisdiction has in place a program in which fabricators are registered with the jurisdiction and demonstrate compliance with quality control procedures.

40.3.5 In-Situ Soils and Controlled Structural Fill.

40.3.5.1 Geotechnical tests and inspection for bearing capacity of in-situ soils shall be as required in Table 40.3.5.1.

Table 40.3.5.1 In-Situ Bearing Strata for Footings

Item	Scope (frequency determined by RDP responsible for design)
Bearing strata quality control review	Review contractor's field quality control procedures.
General excavation	Inspect strata for conformance to the structural drawings, specifications, geotechnical report, or combination thereof. Verify that excavation is to proper depth or material. Verify that excavation is controlled and contains no unsuitable materials.
Bearing surfaces of footings	Inspect bearing surfaces for conformance to the requirements of the structural drawings, specifications, geotechnical report, or combination thereof.

40.3.5.2 Structural tests and inspections for controlled structural fill designed to support the structure shall be as required in Table 40.3.5.2.

40.3.6 Foundations. Structural tests and inspection for foundation systems shall be as required in Table 40.3.6(a) and Table 40.3.6(b).

40.3.7 Cast-in-Place Concrete Construction. Structural tests and inspection for cast-in-place concrete construction, including post-tensioned concrete, shall be as required in Table 40.3.7 and ACI 318, *Building Code Requirements for Structural Concrete.*

Table 40.3.5.2 Controlled Structural Fill (prepared fill)

Item	Scope (frequency determined by RDP responsible for design)
Controlled structural fill quality control review	Review contractor's field quality control procedures.
Fill material	Test material for conformance to specifications or geotechnical report. Perform laboratory compaction tests in accordance with the specifications to determine optimum water content and maximum dry density.
Installation of controlled structural fill	Provide full-time inspection of the installation in accordance with the specifications.
Density of fill	Perform field density tests of the in-place fill in accordance with the specifications.

Table 40.3.6(a) Pile Foundations

Item	Scope (frequency determined by RDP responsible for design)
Pile foundations quality control review	Review contractor's quality control procedures.
Pile materials	Inspect documents identifying pile material and certifying grade of material for conformance to the construction documents and maintenance of that identification from the point of manufacture to the point of delivery to the site.
Pile installation	Perform full-time inspection of installation. Maintain accurate records for each pile. Review final location of each pile.
Precast concrete piles	Perform structural tests and inspections as specified in 40.3.8.
Cast-in-place concrete and reinforcing steel components of piles	Perform structural tests and inspections as specified in 40.3.7.
Specialty piles	Provide inspections and testing criteria for each type of specialty pile (to be provided by RDP responsible for design).

Copyright National Fire Protection Association
Provided by IHS under license with NFPA
No reproduction or networking permitted without license from IHS
Not for Resale

Table 40.3.6(b) Pier Foundations

Item	Scope (frequency determined by RDP responsible for design)
Pier foundation quality control review	Review contractor's quality control procedures. Review scope and frequency of testing and inspections.
Pier installation	Perform full-time inspection of installation. Maintain accurate records for each pier. Verify bearing strata for geotechnical requirements.
Cast-in-place concrete and reinforcing steel components of piers	Perform structural tests and inspections as specified in 40.3.7.

Table 40.3.7 Cast-in-Place Concrete Construction

Item	Scope (frequency determined by RDP responsible for design)
Cast-in-place concrete construction quality control review	Review contractor's field quality control procedures. Review frequency and scope of field testing and inspections.
Mix design	Review mix designs prior to placement. Verify use of required mix design.
Materials	Review material certifications for conformance to specifications.
Batching plant	Review plant quality control procedures and batching and mixing methods.
Reinforcement installation	Inspect reinforcing for ASTM type, grade, size, quantity, condition, and placement. Verify adequate cover per specifications.
Anchor rods	Inspect anchor rods prior to and during placement of concrete.
Post-tensioning operations	Inspect tensioning and anchorage of tendons. Inspect grouting of bonded tendons. Verify concrete strength prior to stressing of tendons and removal of shores and forms from beams and structural slabs.
Formwork	Inspect form sizes for proper sizes of concrete members. Verify concrete strength prior to removal of forms and shores from beams and structural slabs.
Concrete placement and sampling fresh concrete	Observe concrete placement operations. Verify conformance to specifications, including cold-weather and hot-weather placement procedures. When concrete is sampled to make strength test specimens, perform slump and air content tests and determine the temperature of the concrete.
Evaluation of concrete strength	Test and evaluate in accordance with the specifications.
Curing and protection	Observe procedures for conformance to the specifications.
Welding reinforcing steel	Verify weldability of reinforcing steel other than ASTM A 706, *Standard Specification for Low-Alloy Steel Deformed and Plain Bars for Concrete Reinforcement.*
Mechanical splices	Verify proper embedment, joint fit-up, and tightness of mechanical parts.
Shotcrete	Inspect shotcrete placement for proper application techniques.

Copyright National Fire Protection Association
Provided by IHS under license with NFPA
No reproduction or networking permitted without license from IHS
Not for Resale

40.3.8 Precast Concrete. Structural tests and inspection for precast concrete shall be as required in Table 40.3.8 and ACI 318.

40.3.9 Masonry Construction. Structural tests and inspection of masonry materials and construction shall be as required in ACI 530/ASCE 5/TMS 402, *Building Code Requirements for Masonry Structures*.

40.3.10 Steel Construction. Structural tests and inspection for steel materials, fabrication, and erection shall be as required by the following:

(1) Structural steel shall comply with Table 40.3.10(a).
(2) Cold-formed steel shall comply with Table 40.3.10(b).

Table 40.3.8 Precast Concrete Construction

Item	Scope (frequency determined by RDP responsible for design)
Precast concrete construction quality control review	Review contractor's field quality control procedures. Review frequency and scope of field testing and inspections.
Plant certification/quality control procedures	Review plant quality control procedures. Inspect plant storage and handling procedures. Confirm that approved submittals are in the plant and are being used for fabrication. Review welder's certifications.
Materials	Review material certifications for conformance to specifications.
Formwork	Inspect form sizes.
Reinforcement installation	Inspect reinforcing and prestressing strands for size, quantity, condition, and placement for conformance with construction documents and submittals approved by the RDP responsible for design. Inspect welding.
Mix design	Review mix design prior to placement. Verify use of required mix design.
Concrete placement	Inspect concrete placement procedures.
Curing and protection	Inspect for maintenance of specified curing temperatures and techniques.
Evaluation of concrete strength	Test for conformance to specifications in accordance with approved submittal.
Prestress operation	Inspect application of prestressing forces. Inspect grouting of bonded, post-tensioned prestressing tendons.
Site-erected precast elements	Inspect for compliance with RDP responsible for design-approved submittals approved by the RDP responsible for design and the construction documents approved by the RDP responsible for design. Review site storage and handling procedures for consistency with design of precast elements. Verify that erection drawings approved by the RDP responsible for design are on-site and are being used for erection. Verify that erection procedures specified by the RDP responsible for design are being followed. Observe tensioning and grouting for all bonded post-tensioned tendons. Review welder's certifications. Monitor finished products for structural defects.
Connections/embedded items	Inspect interface connections, including end and edge doweling. Inspect embedments for proper location. Inspect shimming, bearing, bolting, and welding of connections.
Field correction of fabricated items	Review documentation of repair approved by the RDP responsible for design, and verify completion of repairs.

Copyright National Fire Protection Association
Provided by IHS under license with NFPA
No reproduction or networking permitted without license from IHS
Not for Resale

Table 40.3.10(a) Steel Construction

Item	Scope (frequency determined by RDP responsible for design)
Steel construction quality control review	Review contractor's field quality control procedures. Review frequency and scope of field testing and inspections.
Fabricator certification/quality control procedures	Review each fabricator's quality control procedures.
Fabricator inspection	Inspect in-plant fabrication, or review fabricator's approved independent inspection agency's reports.
Materials	Review materials certifications for conformance to the specifications.
Anchor rods	Review contractor's as-built survey. Verify that all anchor rods have been properly tightened and have adequate fit-up.
Bolting	Test and inspect bolted connections in accordance with specifications. Verify bolt size and grade.
Welding	Check welder qualifications. Visually inspect fillet welds and test full-penetration field welds in accordance with specifications.
Shear connectors	Inspect for size and placement. Test for proper weld attachment.
Structural framing, bracing, details, and assemblies	Inspect for size, grade of steel, camber, installation, and connection details. Check against approved construction documents and shop drawings.
Open web steel joists	Inspect for size, placement, bridging, bearing, and connection to structure. Visually inspect all welds of a minimum of 5 percent of the joists, randomly selected.
Expansion and adhesive anchors	Review installation procedures for both mechanical anchors and adhesive anchors. Verify that materials are suitable for job conditions.
Metal decking	Verify gauge width and type. Inspect placement, laps, welds, sidelap attachment, and screws or other mechanical fasteners. Check welder's qualifications.
Field correction of fabricated items	Review documentation of repair approved by the RDP responsible for design, and verify completion of repairs.

Table 40.3.10(b) Light-Framed Cold-Formed Steel

Item	Scope (frequency determined by RDP responsible for design)
Light-framed cold-formed steel quality control review	Review contractor's field quality control procedures. Review scope of testing and inspections.
Fabricator's quality control procedures	Review fabricator's quality control procedures.
Material certification	Review for conformance to construction documents.
Fabrication inspection	Inspect in-plant fabrication, or review fabricator's approved independent inspection agency's reports.
Shear walls, diaphragms, and holddowns	Inspect thickness and grade of wood structural panel, blocking, hold-down anchors, and the edge and field attachment of the structural wood panel to the framing for conformance to the submittals approved by the RDP responsible for design and the construction documents. Review panelized construction for proper wood structural panel overlaps.

Copyright National Fire Protection Association
Provided by IHS under license with NFPA
No reproduction or networking permitted without license from IHS
Not for Resale

Table 40.3.10(b) *Continued*

Item	Scope (frequency determined by RDP responsible for design)
Installation	Verify that type, size, quantity, location, details, and connections of framing and bracing members conform to submittals approved by the RDP responsible for design and the construction documents.
Welding	Check welders' qualifications. Verify that welding conforms to AWS specifications, submittals approved by the RDP responsible for design, and the construction documents. Visually inspect welds.
Other fasteners	Verify fastener type and installation procedures. Verify that fasteners conform to submittals approved by the RDP responsible for design and the construction documents. Verify that fasteners are installed tight.
Field correction of fabricated items	Review documentation of repair approved by the RDP responsible for design, and verify completion of repairs.

40.3.11 Wood Construction. Structural tests and inspection for wood framing and engineered wood components or assemblies, including fastening and other connection methods, shall be as required in Table 40.3.11.

Table 40.3.11 Wood Construction

Item	Scope (frequency determined by RDP responsible for design)
Wood construction quality control review	Review contractor's quality control procedures. Review scope and frequency of testing and inspections.
Fabricator certification/quality control procedures for prefabricated wood components	Review fabricator's quality control procedures.
Material grading	Inspect lumber for conformance to the construction documents. Check moisture content, as applicable.

Table 40.3.11 *Continued*

Item	Scope (frequency determined by RDP responsible for design)
Framing, details, and connections	Inspect members for size, placement, and connection details. Inspect blocking between floors and at posts. Verify proper connection hardware and its installation. Inspect bearing, nailing, and completed connections for conformance to the submittals approved by the RDP responsible for design and the construction documents.
Shear walls, diaphragms, and holddowns	Inspect thickness and grade of wood structural panel, blocking, hold-down anchors, and the edge and field nailing of the wood structural panel to the framing for conformance to the submittals approved by the RDP responsible for design and the construction documents. Review panelized construction for proper wood structural panel overlaps.
Wood trusses	Inspect size and location of nail plates, split rings, bolts, or other connection devices for conformance to submittals approved by the RDP responsible for design and the construction documents. Verify that nails, bolts, hold-down anchors or clips, or other devices, are tight and otherwise properly installed. Verify that permanent web bracing, including X-bracing, has been installed.
Laminated lumber	Inspect grade, nailing, end bearing, and end attachment for conformance to submittals approved by the RDP responsible for design and the construction documents.
Anchor bolts	Verify that anchor bolts have been placed as indicated on the plans.

Copyright National Fire Protection Association
Provided by IHS under license with NFPA
No reproduction or networking permitted without license from IHS
Not for Resale

40.3.12 Special Cases. A quality assurance program shall be prepared by the RDP responsible for design for permitted work that is, in the opinion of either the RDP or the authority having jurisdiction, unusual in nature, such as the following:

(1) Application of structural, mechanical, electrical, fire protection, geotechnical, or plumbing materials, components, assemblies, or systems that are alternatives to those recognized by this *Code* or its applicable reference standards
(2) Construction or installation of structural, mechanical, electrical, fire protection, geotechnical, or plumbing materials, components, assemblies, or systems required to be installed in accordance with the manufacturer's instructions that prescribe requirements not recognized by this *Code* or its applicable reference standards

40.4 Quality Assurance for Wall Finish Systems.

40.4.1 Scope.

40.4.1.1 A quality assurance program for wall finish systems shall be prepared by the RDP responsible for design.

40.4.1.2 Tests and inspection for curtain walls, wall panels, and veneers shall be as required in Table 40.4.1.2.

Table 40.4.1.2 Exterior Wall Panels and Veneers

Item	Scope (frequency determined by RDP responsible for design)
Curtain wall quality control review	Review contractor's quality control procedures. Review scope and frequency of testing and inspections.
Precast concrete panels	Perform applicable structural tests and inspections as specified in 40.3.8.
Light-framed cold-formed steel framing for panels	Perform applicable structural tests and inspections as specified in 40.3.10(2).
Proprietary lightweight curtain wall systems	Review manufacturer's fabrication methods and quality control procedures. Review material certification and inspect fabrication of structural framing, details, connections, and fasteners for conformance to submittals approved by the RDP responsible for design and the construction documents.
Masonry veneers	Perform applicable structural tests and inspections as specified in 40.3.9. Verify that shelf angles, ties to the backup structure, and other structural supports are installed in conformance with the construction documents and submittals approved by the RDP responsible for design.
Field correction of fabricated items	Review documentation of repair approved by the RDP responsible for design, and verify completion of repairs.

40.4.2 Exterior Insulation and Finish Systems (EIFS). Inspection of the installation of EIFS systems shall be performed in accordance with EIMA 99A, *Exterior Insulation and Finish Systems (EIFS).*

40.5 Quality Assurance for Sprayed Fire-Resistive Materials.

40.5.1 Scope.

40.5.1.1 A quality assurance program for sprayed fire-resistive materials shall be prepared by the RDP responsible for design.

40.5.1.2 Tests and inspections shall be as required in Table 40.5.1.2 and ASTM E 605, *Standard Test Methods for Thickness and Density of Sprayed Fire-Resistive Material (SFRM) Applied to Structural Members*, and ASTM E 736, *Standard Test Method for Cohesion/Adhesion of Sprayed Fire-Resistive Materials Applied to Structural Members.*

Table 40.5.1.2 Sprayed Fire-Resistive Materials

Item	Scope (frequency determined by RDP responsible for design)
Sprayed fire-resistive materials quality control review	Review contractor's quality control procedures. Review scope and frequency of testing and inspections.
Materials	Review material certifications for conformance to specifications.
Installation	Review surfaces to receive sprayed fire-resistive materials, temperature at application, equipment, and application procedures. Verify installation procedure with manufacturer's written instructions.

40.5.2 Thickness.

40.5.2.1 The average thickness of the sprayed fire-resistive materials applied to structural elements shall be not less than the thickness required by the approved fire resistance design.

40.5.2.2 Thickness shall be determined in accordance with ASTM E 605.

40.5.3 Density.

40.5.3.1 The density of the sprayed fire-resistive materials shall be not less than the density specified in the approved fire resistance–rated designs.

Copyright National Fire Protection Association
Provided by IHS under license with NFPA
No reproduction or networking permitted without license from IHS
Not for Resale

40.5.3.2 The density of the sprayed fire-resistive materials shall be determined in accordance with ASTM E 605.

40.5.4 Bond Strength.

40.5.4.1 The cohesive/adhesive bond strength of the cured sprayed fire-resistive materials applied to structural elements shall be not less than 150 psf (7.18 kN/m^2).

40.5.4.2 The cohesive/adhesive bond strength shall be determined in accordance with the field test specified in ASTM E 736 by testing in-place samples of the sprayed fire-resistive material selected as specified in 40.5.4.2.1 and 40.5.4.2.2.

40.5.4.2.1 The test samples for determining the cohesive/adhesive bond strength of the sprayed fire-resistive materials shall be selected from each floor, roof, and wall assembly at the rate of not less than one sample for every 10,000 ft^2 (930 m^2), or part thereof, of the sprayed area in each story.

40.5.4.2.2 The test samples for determining the cohesive/adhesive bond strength of the sprayed fire-resistive materials shall be selected from beams, girders, joists, trusses, and columns at the rate of not less than one sample for each type of structural element for each 10,000 ft^2 (930 m^2) of floor area, or part thereof, in each story.

40.6 Quality Assurance for Smoke Control Systems.

40.6.1 Scope. A quality assurance program for the installation and operation of smoke control systems shall be prepared by the RDP responsible for design.

40.6.1.1 Special tests and inspection of smoke control systems shall include testing during erection and prior to concealment of ductwork for the purposes of identifying leakage and recording the actuating device location.

40.6.1.2 Prior to occupancy and after substantial completion, pressure difference testing, flow measurements, and detection and control verification shall be performed.

40.6.2 Qualifications. Testing and inspection agents for smoke control systems shall have expertise in fire protection engineering and mechanical engineering and shall be certified as air balancers.

40.7 Quality Assurance for Stairs and Railings.

40.7.1 A quality assurance program for the fabrication and installation of stairs, handrails, and guardrails shall be prepared by the RDP responsible for design.

40.7.2 Anchorage of stair and railing assemblies to structural supports shall be inspected for compliance with construction documents.

40.8 Quality Assurance for Nonstructural Components and Systems. Quality assurance programs shall be prepared by each RDP responsible for design for seismic load–resisting connections; supports; and anchorages of specific nonstructural components, assemblies, and equipment as required in accordance with 40.2.3.3.

40.9 Quality Assurance for Penetrations and Joints. A quality assurance program for the installation of devices and systems installed to protect penetrations and joints shall be prepared and monitored by the RDP responsible for design. Inspections of firestop systems and fire-resistive joint systems shall be in accordance with 40.9.1 and 40.9.2.

40.9.1 Inspection of firestop systems of the types tested in accordance with ASTM E 814, *Standard Test Method for Fire Tests of Through-Penetration Fire Stops*, or UL 1479, *Standard for Fire Tests of Through-Penetration Firestops*, shall be conducted in accordance with ASTM E 2174, *Standard Practice for On-site Inspection of Installed Fire Stops*.

40.9.2 Inspection of fire-resistive joint systems of the types tested in accordance with ASTM E 1966, *Standard Test Method for Fire-Resistive Joint Systems*, or UL 2079, *Standard for Tests for Fire Resistance of Building Joint Systems*, shall be conducted in accordance with ASTM E 2393, *Standard Practice for On-Site Inspection of Installed Fire Resistive Joint Systems and Perimeter Fire Barriers*.

Chapter 41 Concrete

41.1 Scope.

41.1.1 The provisions of Sections 41.2 through 41.7 shall apply to the design and construction of concrete elements.

41.1.2 The provisions of Section 41.8 shall apply to the design and construction of cast-in-place reinforced gypsum concrete.

41.2 General. The design and construction of cast-in-place or precast structural elements of plain or reinforced concrete, including prestressed concrete, shall comply with ACI 318, *Building Code Requirements for Structural Concrete*, unless modified by other provisions of this chapter and the following:

(1) The basement, foundation, and above-grade walls of one- and two-family dwellings using insulating concrete forms (ICF) shall be permitted to be designed and constructed in accordance with the provisions of PCA EB118, *Prescriptive Method for Insulating Concrete Forms in Residential Construction*, provided that the building meets the limitations of Table 1.1 of that document.
(2) The basement, foundation, and above-grade walls of one- and two-family dwellings using conventional forms with flat surfaces shall be permitted to be designed and constructed in accordance with the provisions of PCA EB118 for flat ICF walls, provided that the building meets the limitations of Table 1.1 of that document.

41.2.1 Slabs-on-Ground.

41.2.1.1 The design and construction of slabs-on-ground that transmit vertical loads or lateral forces from other parts of the structure to the soil shall comply with ACI 318 and Section 41.6.

41.2.1.2 Slabs-on-ground that do not transmit vertical loads or lateral forces from other parts of the structure to the soil shall comply with Section 41.6.

41.2.2 Concrete on Steel Form Decks. The design and construction of concrete slabs cast on stay-in-place steel form decks shall comply with 41.2.2.

41.2.2.1 Noncomposite Steel Form Decks. The design and construction of concrete slabs cast on stay-in-place, noncomposite steel form decks shall comply with ACI 318.

41.2.2.2 Composite Steel Form Decks.

41.2.2.2.1 The design and construction of concrete slabs cast on stay-in-place, composite steel form decks shall comply with ASCE/SEI 3, *Standard for the Structural Design of Composite Slabs*.

41.2.2.2.2 Concrete used in the construction of slabs described in 41.2.2.2.1 shall comply with the applicable portions of Chapters 1 through 7 of ACI 318.

Copyright National Fire Protection Association
Provided by IHS under license with NFPA
No reproduction or networking permitted without license from IHS
Not for Resale

41.2.3 Concrete Piles, Piers, and Caissons.

41.2.3.1 The design and construction of portions of concrete piles, piers, and caissons that are laterally supported by soil shall comply with Chapter 36.

41.2.3.2 Portions of concrete piles, piers, and caissons in soil not capable of providing lateral support, or in air or water, shall comply with ACI 318.

41.2.3.3 Concrete piles, piers, and caissons supporting structures assigned to Seismic Design Category D through Seismic Design Category F shall comply with Section 21.10.4 of ACI 318 if not in conflict with the requirements of Chapter 36 of this *Code* and Section 14.2.7 of ASCE/SEI 7, *Minimum Design Loads for Buildings and Other Structures*.

41.3 Construction Documents. Information designated in Section 1.2.1 of ACI 318 shall be shown on construction documents.

41.4 Quality Assurance. The quality assurance of concrete construction shall be provided in accordance with 40.3.7 and 40.3.8.

41.5 Seismic Requirements. In addition to the requirements of this chapter, the design and construction of concrete elements that resist seismic forces shall comply with the requirements of Section 14.2 of ASCE/SEI 7.

41.6 Slabs-on-Ground. The provisions of this section shall apply to all concrete slabs-on-ground.

41.6.1 Durability. Concrete used in slabs-on-ground shall comply with the durability requirements of Chapter 4 of ACI 318.

41.6.2 Minimum Thickness. The minimum thickness of slabs-on-ground shall be 3½ in. (90 mm).

41.6.3 Vapor Retarder.

41.6.3.1 A vapor retarder having a perm rating not exceeding 0.5 or a 6 mil (0.15 mm) thickness of polyethylene shall be placed between the top of the subgrade or base material and the bottom of the slab.

41.6.3.2 Joints in the vapor retarder shall be lapped a minimum of 6 in. (150 mm).

41.6.3.3 A vapor retarder shall not be required to be provided under the following conditions:

(1) Where local site conditions have been approved
(2) Where the slab is not enclosed within a building and will not be enclosed at a later date
(3) In occupancies where migration of moisture through the slab is not detrimental to the intended use of the building
(4) In unheated, detached buildings accessory to one- and two-family dwellings
(5) In unheated storage rooms of less than 70 ft^2 (6.5 m^2) in one- and two-family dwellings

41.7 Shotcrete.

41.7.1 General. Shotcrete shall be defined as concrete or mortar thrust pneumatically at high velocity onto a surface. Shotcrete shall comply with the provisions of this chapter for reinforced and plain concrete construction, except as specified in Section 41.7.

41.7.2 Specifications. Specifications for shotcrete shall comply with ACI 506.2, *Specification for Materials, Proportioning, and Application of Shotcrete*.

41.8 Reinforced Gypsum Concrete.

41.8.1 Criteria.

41.8.1.1 Materials used in reinforced gypsum concrete shall comply with ASTM C 317, *Standard Specification for Gypsum Concrete*.

41.8.1.2 The design and installation of cast-in-place reinforced gypsum concrete shall be in accordance with ASTM C 956, *Standard Specification for Installation of Cast-in-Place Reinforced Gypsum Concrete*.

41.8.1.3 Precast gypsum concrete shall be used only where approved.

41.8.2 Limitations of Use.

41.8.2.1 Cast-in-place reinforced gypsum concrete shall be constructed with nonabsorptive formboard or surfacing where used for either of the following:

(1) For occupancies producing unusually high humidities
(2) For ceilings of structures not completely enclosed

41.8.2.2 Concentrated loads, such as from water tanks, fan bases, cooling towers, flagpoles, and signs, shall be transmitted directly to the primary roof framing members, walls, or footings.

41.8.3 Testing.

41.8.3.1 Testing of gypsum concrete shall be in accordance with the criteria set forth in ASTM C 472, *Standard Test Methods for Physical Testing of Gypsum, Gypsum Plasters and Gypsum Concrete*.

41.8.3.2 One test of each day's pour of cast-in-place gypsum concrete shall be made, and the results thereof shall be presented to the authority having jurisdiction.

Chapter 42 Aluminum

42.1 General. Aluminum construction shall be designed and constructed in accordance with approved standards.

Chapter 43 Masonry

43.1 Scope. The provisions of this chapter shall apply to the design and construction of masonry elements, whether unreinforced or reinforced, used in buildings and other structures.

43.2 General. The design and construction of structural elements of unreinforced or reinforced masonry shall comply with ACI 530/ASCE 5/TMS 402, *Building Code Requirements for Masonry Structures*, except as modified by other provisions of this chapter.

43.3 Design. Masonry structures and their component members shall be designed in accordance with the provisions of Chapter 1 of ACI 530/ASCE 5/TMS 402 and one of the following chapters from ACI 530/ASCE 5/TMS 402:

(1) Allowable Stress Design—Chapter 2
(2) Strength Design of Masonry—Chapter 3
(3) Prestressed Masonry—Chapter 4
(4) Empirical Design of Masonry—Chapter 5
(5) Veneer—Chapter 6
(6) Glass Unit Masonry—Chapter 7

Copyright National Fire Protection Association
Provided by IHS under license with NFPA
No reproduction or networking permitted without license from IHS
Not for Resale

43.4 Construction Documents. Information designated in Section 1.2 of ACI 530/ASCE 5/TMS 402 shall be shown on construction documents.

43.5 Quality Assurance. The quality assurance of masonry construction shall be provided in accordance with 40.3.9.

43.6 Masonry Construction Materials. Material for masonry construction shall be according to Part 2 of ACI 530.1/ASCE 6/TMS 602, *Specification for Masonry Structures*.

43.6.1 Second-Hand Units.

43.6.1.1 Second-hand masonry units shall not be reused, unless the units conform to the requirements for new units.

43.6.1.2 The units shall be free from cracks and other defects that will interfere with laying or use.

43.6.1.3 Old mortar shall be cleaned from the unit before reuse.

43.6.2 Surface-Bonding Mortar.

43.6.2.1 Surface-bonding mortar shall comply with ASTM C 887, *Standard Specification for Packaged, Dry, Combined Materials for Surface Bonding Mortar*.

43.6.2.2 Surface bonding of concrete masonry units shall comply with ASTM C 946, *Standard Practice for Construction of Dry-Stacked, Surface-Bonded Walls*.

43.7 Masonry Construction. Masonry construction shall comply with the requirements of 43.7.1 through 43.7.4 and ACI 530.1/ASCE 6/TMS 602.

43.7.1 Open-end units with beveled ends shall be fully grouted.

43.7.2 Head joints of open-end units with beveled ends shall not be required to be mortared.

43.7.3 The beveled ends of open-end units shall form a grout key that allows grouts within ⅝ in. (15.9 mm) of the face of the unit.

43.7.4 Open-end units shall be placed to prevent leakage of the grout.

43.8 Seismic Requirements.

43.8.1 General. In addition to the requirements of this chapter, the design and construction of masonry elements shall comply with the requirements of Section 1.14 of ACI 530/ASCE 5/TMS 402.

43.8.2 One- and Two-Family Dwellings. In detached one- and two-family dwellings of light-frame construction and of two stories or less, masonry veneer shall comply with the requirements of ACI 530/ASCE 5/TMS 402, except that the isolation requirements of ACI 530/ASCE 5/TMS 402, Section 6.2.2.10.1.2, and the independent support requirements for each story specified in ACI 530/ASCE 5/TMS 402, Section 6.2.2.10.2.2, shall not apply in Seismic Design Category D.

43.9 Masonry and Concrete Fireplaces and Chimneys. Masonry and concrete fireplaces and chimneys shall comply with the requirements of NFPA 211, *Standard for Chimneys, Fireplaces, Vents, and Solid Fuel-Burning Appliances*. Chimney and fireplace construction shall be in accordance with Section 32.11.

Chapter 44 Steel

44.1 General. The provisions of this chapter shall govern the quality, design, fabrication, and erection of steel used structurally in buildings or structures.

44.1.1 Special Definitions. A list of special terms used in this chapter follows:

44.1.1.1 Adjusted Shear Resistance. The unadjusted shear resistance multiplied by the shear resistance adjustment factors.

44.1.1.2 Type II Shear Wall Segment. A section of shear wall with full-height sheathing and that meets the required aspect ratio limits.

44.1.1.3 Wall.

44.1.1.3.1 Type I (Segmented) Shear Wall. A wall designed to resist inplane lateral forces that is fully sheathed and that is provided with hold-down anchors at each end of the wall segment.

44.1.1.3.2* Type II (Perforated) Shear Wall. A wall designed to resist inplane lateral forces that is sheathed with wood structural panel or sheet steel that contains openings, but that has not been specifically designed and detailed for force transfer around wall openings.

44.1.2 Identification of Steel for Structures.

44.1.2.1 Steel furnished for structural load–carrying purposes shall be identified for conformity to the ordered grade in accordance with the specified ASTM standard or other specification and the provisions of this chapter.

44.1.2.2 Steel that is not identifiable as to grade shall be tested to determine conformity to the standards or specifications discussed in 44.1.2.1.

44.2 Structural Steel Construction.

44.2.1 General.

44.2.1.1 The design, fabrication, and erection of structural steel for buildings and structures shall be in accordance with AISC 360, *Specification for Structural Steel Buildings*.

44.2.1.2 Web openings in structural steel beams shall be permitted to be designed in accordance with ASCE/SEI 23, *Specification for Structural Steel Beams with Web Openings*.

44.2.2 Seismic Design Category A through Seismic Design Category C.

44.2.2.1 Structural steel buildings assigned to Seismic Design Category A through Seismic Design Category C shall be of any construction permitted in AISC 360.

44.2.2.2 An *R* factor as set forth in ASCE/SEI 7, *Minimum Design Loads for Buildings and Other Structures*, Table 12.2-1, for the appropriate steel system shall be permitted when the structure is designed and detailed in accordance with the provisions of AISC 341, *Seismic Provisions for Structural Steel Buildings*, Part I.

44.2.2.3 Systems not detailed in accordance with 44.2.2.1 and 44.2.2.2 shall use the *R* factor in ASCE/SEI 7, Table 12.2-1, designated for "structural steel systems not specifically detailed for seismic resistance."

44.2.3 Seismic Design Category D through Seismic Design Category F. Structural steel buildings assigned to Seismic Design Category D through Seismic Design Category F shall be designed and detailed in accordance with AISC 341, Part I.

Copyright National Fire Protection Association
Provided by IHS under license with NFPA
No reproduction or networking permitted without license from IHS
Not for Resale

44.2.4 Seismic Requirements for Composite Construction.

44.2.4.1 The design, construction, and quality of composite steel and concrete components that resist seismic forces shall conform to the requirements of the AISC 360 or ACI 318, *Building Code Requirements for Structural Concrete.*

44.2.4.2 An *R* factor as set forth in ASCE/SEI 7, Table 12.2-1, for the appropriate composite steel and concrete system shall be permitted when the structure is designed and detailed in accordance with the provisions of AISC 341, Part II.

44.2.4.3 In Seismic Design Category B through Seismic Design Category F, the design of the systems shall conform to the requirements of AISC 341, Part II.

44.2.4.4 Composite structures shall be permitted in Seismic Design Category D through Seismic Design Category F, subject to the limitations in ASCE/SEI 7, Table 12.2-1, when evidence approved by the authority having jurisdiction is provided to demonstrate that the proposed system will perform as intended by AISC 341, Part II.

44.2.4.5 Where composite elements or connections are required to sustain inelastic deformations, the evidence approved by the authority having jurisdiction shall be based on cyclic testing.

44.3 Steel Joists.

44.3.1 The design, manufacture, and use of open web steel joists and joist girders shall be in accordance with one of the following Steel Joist Institute (SJI) specifications:

(1) *Standard Specifications for Open Web Steel Joists, K Series*
(2) *Standard Specifications for Longspan Steel Joists, LH Series and Deep Longspan Steel Joists, DLH Series*
(3) *Standard Specifications for Joist Girders*

44.3.2 Where required, the seismic design of steel buildings in which joists are used shall be in accordance with the additional provisions of 44.2.2 or 44.2.3.

44.4 Steel Cable Structures.

44.4.1 General. The design, fabrication, and erection of steel cables for buildings, including related connections and protective coatings, shall be in accordance with ASCE/SEI 19, *Structural Applications of Steel Cables for Buildings.*

44.4.2 Seismic Requirements for Steel Cable. The design strength of steel cables shall be determined by the provisions of ASCE/SEI 19, except as modified by the following provisions:

(1) A load factor of 1.1 shall be applied to the prestress force included in T_3 and T_4, as defined in Section 3.1.2 of ASCE/SEI 19.
(2) In Section 3.2.1 of ASCE/SEI 19, item (c) shall be replaced with 1.5 T_3 and item (d) shall be replaced with 1.5 T_4.

44.5 Steel Storage Racks.

44.5.1 The design, testing, and utilization of industrial steel storage racks shall be in accordance with the RMI publication *Specification for the Design, Testing and Utilization of Industrial Steel Storage Racks*, the scope of which includes industrial pallet racks, movable shelf racks, and stacker racks.

44.5.2 The RMI specification referenced in 44.5.1 shall not apply to other types of racks, such as drive-in and drive-through racks, cantilever racks, portable racks, or rack buildings.

44.5.3 When required, the seismic design of storage racks shall also be in accordance with Section 15.5.3 of ASCE/SEI 7.

44.6 Cold-Formed Steel.

44.6.1 Design.

44.6.1.1 The design of cold-formed carbon and low alloy steel structural members shall be in accordance with AISI-NAS, *North American Specification for the Design of Cold-Formed Steel Structural Members.*

44.6.1.2 The design of cold-formed stainless steel structural members shall be in accordance with ASCE 8, *Standard Specification for the Design of Cold-Formed Stainless Steel Structural Members.*

44.6.2 Composite Slabs on Steel Decks. Composite slabs of concrete on steel decks shall be designed and constructed in accordance with ASCE 3, *Standard for the Structural Design of Composite Slabs,* or other approved standards.

44.7 Cold-Formed Steel Framing.

44.7.1 General. The design, installation, and construction of cold-formed steel for structural and nonstructural framing shall be in accordance with AISI-General, *Standard for Cold-Formed Steel Framing — General Provisions.*

44.7.2 Wall Studs. The design of cold-formed steel wall studs shall be in accordance with AISI-NAS or AISI-Wall Stud, *Standard for Cold-Formed Steel Framing—Wall Stud Design*, subject to the limitations therein.

44.7.3 Trusses. The design, quality assurance, installation, and testing of cold-formed steel trusses shall be in accordance with AISI-Truss, *Standard for Cold-Formed Steel Framing — Trusses,* subject to the limitations therein.

44.7.4 Headers. The design and installation of the following shall be permitted to be in accordance with AISI-Header, *Standard for Cold-Formed Steel Framing — Header Design,* subject to the limitations therein:

(1) Cold-formed steel box and back-to-back headers
(2) Double L-headers used in single-span conditions for load-carrying purposes

44.7.5 Lateral Design. The design of shear walls and diaphragms in cold-formed steel light-frame construction shall be in accordance with AISI-Lateral Design, *Standard for Cold-Formed Steel Framing — Lateral Design.*

44.7.6 Prescriptive Framing. One- and two-story single family dwellings and townhouses shall be permitted to be constructed in accordance with AISI-Prescriptive, *Standard for Cold-Formed Steel Framing — Prescriptive Method for One and Two Family Dwellings*, subject to the limitations in Tables A1.1-1 and A1.1-2 therein.

Chapter 45 Wood

45.1 Scope. The provisions of Sections 45.2 through 45.6 shall apply to the design and construction of wood elements.

45.2 Special Definitions. A list of special terms used in this chapter follows.

45.2.1 Accreditation Body. An approved, third-party organization that is independent of the grading and inspection agencies, and the lumber mills, and that initially accredits and subsequently monitors, on a continuing basis, the competency and performance of a grading or inspection agency related to carrying out specific tasks.

Copyright National Fire Protection Association
Provided by IHS under license with NFPA
No reproduction or networking permitted without license from IHS
Not for Resale

45.2.2* Fiberboard. A fibrous, homogeneous panel made from lignocellulosic fibers and having a density of less than 31 lb/ft^3 (497 kg/m^3) but more than 10 lb/ft^3 (160 kg/m^3).

45.2.3 Hardboard. A fibrous-felted, homogeneous panel made from lignocellulosic fibers consolidated under heat and pressure in a hot press to a density not less than 31 lb/ft^3 (497 kg/m^3).

45.2.4 Lumber (Grade). The classification of lumber in regard to strength and utility in accordance with USDOC PS 20, *American Softwood Lumber Standard*, and the grading rules of an approved lumber rules-writing agency.

45.2.5 Nominal Size (Lumber). The commercial size designation of width and depth, in standard sawn lumber and glued laminated lumber grades, meeting the requirements of USDOC PS 20 for sawn lumber and AF&PA NDS, *National Design Specification (NDS) for Wood Construction,* for glued laminated lumber.

45.2.6* Particleboard. A generic term for a panel primarily composed of cellulosic materials, generally in the form of discrete pieces or particles, as distinguished from fibers, that are combined with synthetic resin or other suitable bonding system by a process in which the interparticle bond is created by the bonding system under heat and pressure.

45.2.7 Structural Glued Laminated Timber. Any member comprising an assembly of laminations of lumber in which the grain of all laminations is approximately parallel longitudinally, and in which the laminations are bonded with adhesives.

45.2.8 Wood.

45.2.8.1 Fire-Retardant-Treated Wood. A wood product impregnated with chemical by a pressure process or other means during manufacture, which is tested in accordance with NFPA 255, *Standard Method of Test of Surface Burning Characteristics of Building Materials*, has a listed flame spread of 25 or less, and shows no evidence of significant progressive combustion when the test is continued for an additional 20-minute period; nor does the flame front progress more than 10 ft 6 in. (3200 mm) beyond the centerline of the burners at any time during the test.

45.2.8.2 Preservative-Treated Wood. Wood impregnated under pressure with compounds that reduce their susceptibility to deterioration caused by fungi, insects, or marine borers.

45.2.9 Wood Structural Panel. A panel manufactured from veneers; or wood strands or wafers; or a combination of veneer and wood strands or wafers bonded together with waterproof synthetic resins or other suitable bonding systems, including composite panels, oriented strand board, and plywood.

45.2.9.1 Composite Wood Structural Panel. A structural panel that is made of layers of veneer and wood-based material.

45.2.9.2 Oriented Strand Board (OSB) Wood Structural Panel. A mat-formed wood structural panel product composed of thin, rectangular wood strands or wafers arranged in oriented layers and bonded with waterproof adhesive.

45.2.9.3 Plywood Wood Structural Panel. A wood structural panel comprised of plies of wood veneer arranged in cross-aligned layers.

45.3 General. All wood members and their fasteners shall be designed and constructed in accordance with this chapter and all other applicable requirements of this *Code*.

45.4 Design Requirements. The design of structural elements or systems constructed partially or wholly of wood or wood-based products shall be based on one of the methods in 45.4.1 or 45.4.2.

45.4.1 Allowable Stress Design.

45.4.1.1* Structural analysis and construction of wood elements and structures using allowable stress design methods shall be in accordance with AF&PA NDS, *National Design Specifications (NDS) for Wood Construction*, AF&PA NDS, *NDS Supplement—Design Valves for Wood Construction*, and AF&PA SDPWS, *Special Design Provisions for Wind and Seismic*.

45.4.1.2 Design using allowable stress design methods shall resist the applicable load combinations of Section 35.15 in accordance with the provisions of this chapter.

45.4.1.3 The design and construction of one- and two-family dwellings of light-frame wood construction shall be permitted to be in accordance with the provisions of the AF&PA WFCM, *Wood Frame Construction Manual for One- and Two-Family Dwellings*, subject to the limitations of Section 1.1.3 therein.

45.4.2 Load and Resistance Factor Design.

45.4.2.1* The structural analysis and construction of wood elements and structures using load and resistance factor design methods shall be in accordance with AF&PA NDS, AF&PA NDS Supplement, and AF&PA SDPWS.

45.4.2.2 Design using load and resistance factor design methods shall resist the applicable load combinations of Section 35.15 in accordance with the provisions of this chapter.

45.5 Criteria.

45.5.1 General. Wood members and their fastenings shall conform to the requirements of this chapter and the standards herein.

45.5.2 Lumber Identification. Lumber used for load-supporting purposes, including end-jointed or edge-glued lumber, machine stress–rated lumber, and machine-evaluated lumber, as well as solid-sawn lumber, shall be identified by the grade mark of a lumber grading or inspection agency that has been approved by an accreditation body that complies with USDOC PS 20, or equivalent, and the following also shall apply:

(1) Grading practices and identification shall comply with rules published by an agency approved in accordance with USDOC PS 20 or equivalent procedures.
(2) In lieu of a grade mark on the material, a certificate of inspection as to species and grade issued by a lumber grading or inspection agency meeting the requirements of 45.5.2 shall be permitted for precut, remanufactured, or rough-sawn lumber, and for sizes larger than 3 in. (75 mm) nominal thickness.

45.5.3 Determination of Sizes.

45.5.3.1 For the purposes of this chapter, where dimensions of lumber are specified, they shall be deemed to be nominal dimensions, unless specifically designated as actual dimensions.

45.5.3.2 Minimum dressed sizes corresponding to nominal sizes shall conform with the provisions of USDOC PS 20.

45.5.4 End-Jointed Lumber. Approved end-jointed lumber shall be permitted to be used interchangeably with solid-sawn members of the same species and grade.

Copyright National Fire Protection Association
Provided by IHS under license with NFPA
No reproduction or networking permitted without license from IHS
Not for Resale

45.5.5 Prefabricated Wood I-Joists. Structural capacities and design provisions for prefabricated wood I-joists shall be established and monitored in accordance with ASTM D 5055, *Standard Specification for Establishing and Monitoring Structural Capacities of Prefabricated Wood I-Joists.*

45.5.6 Structural Glued Laminated Timber. Glued laminated timber shall be manufactured and identified as required in ANSI/AITC A190.1, *American National Standard, Structural Glued Laminated Timber,* and ASTM D 3737, *Standard Practice for Establishing Allowable Properties for Structural Glued Laminated Timber (Glulam).*

45.5.7 Wood Structural Panels.

45.5.7.1 A wood structural panel, where used structurally (including those used for siding, roof and wall sheathing, subflooring, diaphragms, and built-up members), shall conform to the requirements for its type in USDOC PS 1*, U.S. Product Standard for Construction and Industrial Plywood,* or USDOC PS 2*, Performance Standard for Wood-based Structural-Use Panels.*

45.5.7.2 Each panel or member shall be identified for grade and glue type by the trademarks of an approved testing and grading agency.

45.5.7.3 Wood structural panel components shall be designed and fabricated in accordance with the standards in 45.5.7.1 and identified by the trademarks of an approved testing and inspection agency indicating conformance with the applicable standard.

45.5.7.4 Wood structural panels that are permanently exposed in outdoor applications shall be of the exterior type, except that wood structural panel roof sheathing exposed to the outdoors on the underside shall be permitted to be of interior type bonded with exterior glue, Exposure 1.

45.5.8 Fiberboard.

45.5.8.1 Where used, fiberboard shall conform to ASTM C 208*, Standard Specification for Cellulosic Fiber Insulating Board.*

45.5.8.2 Fiberboard sheathing, where used structurally, shall be so identified by an approved agency as conforming to ASTM C 208.

45.5.9 Hardboard Products.

45.5.9.1 Hardboard siding, where used structurally, shall be identified by an approved agency conforming to ANSI/AHA A135.6*, Hardboard Siding.*

45.5.9.2 Hardboard underlayment shall meet the strength requirements of 7⁄32 in. (5.6 mm) or ¼ in. (6.4 mm) service class hardboard, planed or sanded on one side to a uniform thickness of not less than 0.200 in. (5.1 mm).

45.5.9.3 Prefinished hardboard paneling shall meet the requirements of ANSI/AHA A135.5*, Prefinished Hardboard Paneling.*

45.5.9.4 Other basic hardboard products, aside from those discussed in 45.5.9.1 through 45.5.9.3, shall meet the requirements of ANSI/AHA A135.4, *Basic Hardboard.*

45.5.9.5 Hardboard products shall be installed in accordance with the manufacturer's recommendations.

45.5.10 Particleboard.

45.5.10.1 Particleboard shall conform to ANSI A208.1, *Standard for Particleboard.*

45.5.10.2 Particleboard shall be identified by the grade mark or certificate of inspection issued by an approved agency.

45.5.10.3 Particleboard shall not be utilized for applications other than those indicated in 45.5.10, unless the particleboard complies with the provisions of documents referenced in Section 45.4 for particleboard shear walls.

45.5.10.4 Particleboard floor underlayment shall conform to Type PBU of ANSI A208.1.

45.5.10.5 Type PBU particleboard underlayment shall be not less than ¼ in. (6.4 mm) thick and shall be installed in accordance with the installation instructions of the Composite Panel Association.

45.5.11 Preservative-Treated Wood.

45.5.11.1 Preservative-treated wood shall comply with the following:

(1) All lumber, timber, plywood, piles, and poles supporting permanent structures and required by 45.6.9 to be preservative-treated shall conform to the requirements of the following applicable AWPA standards for the species, product, preservative, and end use:
   (a) C1, *Standard for Preservative Treatment of All Timber Products by Pressure Processes*
   (b) C2, *Standard for the Preservative Treatment of Lumber, Timber, Bridge Ties, and Mine Ties by Pressure Processes*
   (c) C3, *Piles — Preservative Treatment by Pressure Processes*
   (d) C4, *Poles — Preservative Treatment by Pressure Processes*
   (e) C9, *Plywood — Preservative Treatment by Pressure Processes*
   (f) C14, *Wood for Highway Construction — Preservative Treatment by Pressure Processes*
   (g) C15, *Wood for Commercial-Residential Construction Preservative Treatment by Pressure Processes*
   (h) C16, *Wood Used on Farms — Preservative Treatment by Pressure Processes*
   (i) C22, *Lumber and Plywood for Permanent Wood Foundations — Preservative Treatment by Pressure Processes*
   (j) C23, *Round Poles and Posts Used in Building Construction — Preservative Treatment by Pressure Processes*
   (k) C24, *Sawn Timber Piles Used for Residential and Commercial Building*
   (l) C28, *Standard for Preservative Treatment of Structural Glued Laminated Members and Lamination Before Gluing of Southern Pine, Coastal Douglas Fir, Hemfir, and Western Hemlock by Pressure Processes*
   (m) C31, *Lumber Used Out of Contact with the Ground and Continuously Protected from Liquid Water — Treatment by Pressure Processes*
   (n) C33, *Standard for Preservative Treatment of Structural Composite Lumber by Pressure Processes*
   (o) M4, *Standard for the Care of Preservative-Treated Wood Products*
(2) Preservatives shall conform to the following AWPA standards:
   (a) P1/P13, *Standard for Creosote Preservative*
   (b) P2, *Standard for Creosote Solutions*
   (c) P5, *Standard for Waterborne Preservatives*
   (d) P8, *Standard for Oil-borne Preservatives*
   (e) P9, *Standards for Solvents and Formulations for Organic Preservative Systems*

45.5.11.2 All wood required by this chapter to be preservative-treated shall bear the quality mark of an inspection agency that maintains continuing supervision, testing, and inspection over the quality of the preservative-treated wood.

Copyright National Fire Protection Association
Provided by IHS under license with NFPA
No reproduction or networking permitted without license from IHS
Not for Resale

45.5.11.3 Inspection agencies for preservative-treated wood shall be listed by an accreditation body that complies with the requirements of the American Lumber Standards Treated Wood Program or equivalent.

45.5.11.4 The quality mark discussed in 45.5.11.2 shall be on a stamp or label affixed to the preservative-treated wood.

45.5.11.5 The quality mark discussed in 45.5.11.2 shall include the following information:

(1) Identification of treating manufacturer
(2) Type of preservative used
(3) Minimum preservative retention (pcf)
(4) End use for which the product is treated
(5) AWPA standard to which the product was treated
(6) Identity of the accredited inspection agency

45.5.11.6 Where preservative-treated wood is used in enclosed locations where drying in service cannot readily occur, such wood shall be at a moisture content of 19 percent or less before being covered with insulation, interior wall finish, floor covering, or other materials.

45.5.12 Structural Composite Lumber. Structural capacities for structural composite lumber shall be established and monitored in accordance with ASTM D 5456, *Standard Specification for Evaluation of Structural Composite Lumber Products*.

45.5.13 Hardwood Plywood. Hardwood and decorative plywood shall be manufactured and identified as required in ANSI/HPVA HP-1, *American National Standard for Hardwood and Decorative Plywood*.

45.5.14 Interior Paneling.

45.5.14.1 All softwood wood structural panels used for interior paneling shall conform with USDOC PS 1 or USDOC PS 2.

45.5.14.2 Prefinished hardboard paneling shall meet the requirements of ANSI/AHA A135.5. All hardwood plywood shall conform to ANSI/HPVA HP-1.

45.5.15 Fire-Retardant-Treated Wood.

45.5.15.1 Labeling. Fire-retardant-treated lumber and wood structural panels shall be labeled and listed with the following information:

(1) Identification mark of an approved agency that lists materials in accordance with Chapter 3 *(see 3.2.5, Listed)*
(2) Identification of the treating manufacturer
(3) Name of the fire-retardant treatment
(4) Species of wood treated
(5) End use of the product
(6) Flame spread and smoke developed rating
(7) Method of drying after treatment
(8) Verification of conformance with appropriate standards in accordance with 45.5.15.2 through 45.5.15.5
(9) Wording for fire-retardant-treated wood exposed to weather, damp, or wet locations as follows:
"No increase in the listed classification when subjected to the Standard Rain Test (ASTM D 2898, *Standard Test Methods for Accelerated Weathering of Fire-Retardant-Treated Wood for Fire-Testing*)"

45.5.15.2 Strength Adjustments.

45.5.15.2.1 Design values for untreated lumber and wood structural panels, as specified in Section 45.5, shall be adjusted for fire-retardant-treated wood.

45.5.15.2.2 Adjustments to design values shall be based on an approved method of investigation that takes into consideration the effects of the anticipated temperature and humidity to which the fire-retardant-treated wood will be subjected, the type of treatment, and the redrying procedures.

45.5.15.2.2.1 Wood Structural Panels. Adjustment to design values for wood structural panels shall be in accordance with the following:

(1) The effect of the treatment, the method of redrying after treatment, and the exposure to high temperatures and high humidities on the flexure properties of fire-retardant-treated softwood plywood shall be determined in accordance with ASTM D 5516, *Standard Test Method for Evaluating the Flexural Properties of Fire-Retardant-Treated Softwood Plywood Exposed to Elevated Temperatures*.
(2) The test data developed by ASTM D 5516 shall be used to develop adjustment factors or maximum loads and spans, or both, for untreated plywood design values in accordance with ASTM D 6305, *Standard Practice for Calculating Bending Strength Design Adjustment Factors for Fire-Retardant-Treated Plywood Roof Sheathing*.
(3) Each manufacturer shall publish the allowable maximum loads and spans for service as floor and roof sheathing for their treatment.

45.5.15.2.2.2 Lumber. Adjustment to design values for lumber shall be in accordance with the following:

(1) For each species of wood treated, the effect of the treatment, the method of redrying after treatment, and the exposure to high temperatures and high humidities on the allowable design properties of fire-retardant-treated lumber shall be determined in accordance with ASTM D 5664, *Standard Test Method for Evaluating the Effects of Fire-Retardant Treatments and Elevated Temperatures on Strength Properties of Fire-Retardant-Treated Lumber*.
(2) The test data developed by ASTM D 5664 shall be used to develop modification factors for use at or near room temperature and at elevated temperatures and humidity in accordance with ASTM D 6841, *Standard Practice for Calculating Design Value Treatment Adjustment Factors for Fire-Retardent-Treated Lumber*.
(3) Each manufacturer shall publish the modification factors for service at ambient temperatures of up to 100°F (37.8°C) and for service as roof framing.
(4) The roof framing modification factors shall take into consideration the climatological location.

45.5.15.3 Exposure to Weather or Damp or Wet Locations. Where fire-retardant-treated wood is exposed to weather or damp or wet locations, it shall be identified as "exterior" to indicate that there is no increase in the listed flame spread index when subjected to ASTM D 2898. *(See 3.3.657.1, Fire-Retardant-Treated Wood.)*

45.5.15.4 Interior Applications. Interior fire-retardant-treated wood shall have a moisture content of not over 28 percent when tested in accordance with the procedures of ASTM D 3201, *Standard Test Method for Hygroscopic Properties of Fire-Retardant-Wood and Wood-Based Products*, at 92 percent relative humidity. Interior fire-retardant-treated wood shall be tested in accordance with 45.5.15.2.2.1 or 45.5.15.2.2.2.

Copyright National Fire Protection Association
Provided by IHS under license with NFPA
No reproduction or networking permitted without license from IHS
Not for Resale

45.5.15.5 Moisture Content. Fire-retardant-treated wood shall have a moisture content of 19 percent or less for lumber and 15 percent or less for wood structural panels before use. For wood kiln dried after treatment (KDAT), the kiln temperatures shall not exceed the temperatures used in drying the lumber and plywood submitted for the testing described in 45.5.15.2.

45.5.16 Trusses.

45.5.16.1 Metal plate–connected wood trusses shall be manufactured in accordance with ANSI/TPI 1, *National Design Standard for Metal Plate Connected Wood Truss Construction.*

45.5.16.2 Each manufacturer of trusses using metal plate connectors shall retain an approved agency to make nonscheduled inspections of truss manufacturing and delivery operations.

45.5.16.3 The inspection discussed in 45.5.16.2 shall cover all phases of truss operations, including lumber storage, handling, cutting fixtures, presses or rollers, manufacturing, bundling, and banding.

45.5.17 Connectors, Nails, and Staples.

45.5.17.1 Joist hangers and connectors shall comply with ASTM D 1761, *Standard Test Methods for Mechanical Fasteners in Wood.*

45.5.17.2 Nails and spikes shall conform to the requirements of ASTM F 1667, *Standard Specification for Driven Fasteners: Nails, Spikes, and Staples.*

45.5.17.3 Nails used for framing and sheathing connections shall have minimum average bending yield strengths as follows:

(1) 80 ksi (551 MPa) for shank diameters larger than 0.177 in. (4.50 mm) but not larger than 0.254 in. (6.45 mm)
(2) 90 ksi (620 MPa) for shank diameters larger than 0.142 in. (3.61 mm) but not larger than 0.177 in. (4.50 mm)
(3) 100 ksi (689 MPa) for shank diameters of 0.142 in. (3.61 mm) or less

45.6 General Construction Requirements.

45.6.1 General. The provisions of Section 45.6 shall apply to the design methods specified in Section 45.4.

45.6.2 Continuous Load Path.

45.6.2.1 A continuous load path shall be provided to transfer all gravity, seismic, and wind loads from the roof, wall, and floor systems to the foundation.

45.6.2.2 Where the structural wood frame is more than one story in height or one story over elevated foundation (piles), and studs and posts are not continuous from sill to roof, the members shall be secured together with the following to ensure a continuous load path:

(1) Approved framing anchors
(2) Approved framing clips
(3) Approved framing splices
(4) Other approved connections

45.6.3 Size of Structural Members. Computations to determine the required sizes of structural members shall be based on the actual size of the member and not on nominal sizes.

45.6.4 Wall Framing.

45.6.4.1 Wall framing shall be designed and installed in accordance with the appropriate design methodology in Section 45.4.

45.6.4.2 Studs shall have full bearing on 2 in. (50 mm) nominal dimension lumber [actual 1½ in. (38 mm)] or larger plate or sill having a width at least equal to the width of the studs.

45.6.4.3 Headers, double joists, trusses, or other approved assemblies that are adequate to transfer all loads to the vertical members shall be provided over all window and door openings in load-bearing walls and partitions.

45.6.4.4 All wood columns and posts shall be framed to provide full-end bearing.

45.6.4.5 As an alternative to the requirement of 45.6.4.4, column-and-post end connections shall be designed to resist the full compressive loads, neglecting all end-bearing capacity.

45.6.4.6 Column-and-post end connections shall be fastened to resist lateral and net induced uplift forces.

45.6.5 Floor and Roof Framing.

45.6.5.1 Wall framing shall be designed and installed in accordance with the appropriate design methodology in Section 45.4.

45.6.5.2 Joist and rafter spans shall be permitted to be in accordance with the AF&PA publication *Span Tables for Joists and Rafters.*

45.6.5.3 The design of plank and beam flooring shall be permitted to be in accordance with AF&PA Wood Construction Data No. 4, *Plank and Beam Framing for Residential Buildings.*

45.6.5.4 Combustible framing shall be minimum of 2 in. (51 mm) from all flues, chimneys, and fireplaces, but shall be not less than the distance specified in the NFPA 211, *Standard for Chimneys, Fireplaces, Vents, and Solid Fuel-Burning Appliances.*

45.6.5.5 Combustible framing shall be a minimum of 6 in. (152 mm) away from flue openings.

45.6.6 Wall Sheathing.

45.6.6.1 Wall sheathing shall be designed and installed in accordance with the appropriate methodology in Section 45.4.

45.6.6.2 Where wood structural panel sheathing is used as the exposed finish on the exterior of outside walls, it shall have an exterior exposure durability classification.

45.6.6.3 Where wood structural panel sheathing is used on the exterior of outside walls, but not as the exposed finish, it shall be of a type manufactured with exterior glue Exposure 1 or Exterior.

45.6.6.4 Where wood structural panel sheathing is used elsewhere, it shall be of a type manufactured with intermediate or exterior glue.

45.6.7 Floor and Roof Sheathing.

45.6.7.1 Structural floor sheathing shall be designed and installed in accordance with the appropriate methodology in Section 45.4.

45.6.7.2 Wood structural panel roof sheathing shall be bonded by exterior glue.

45.6.8 Connections and Fasteners.

45.6.8.1 Connections for wood members shall be designed in accordance with the appropriate methodology in Section 45.4.

45.6.8.2 The number and size of nails connecting wood members shall not be less than that set forth in Table 45.6.8.2.

--`,,```,,,,````-`-`,,`,,`,`,,`---

Copyright National Fire Protection Association
Provided by IHS under license with NFPA
No reproduction or networking permitted without license from IHS
Not for Resale

Table 45.6.8.2 General Fastening Schedule

Connection	Nail and Nailing Pattern[a]	Location
Joist to sill or girder	3-8d common	Toenail
Bridging to joist	2-8d common	Toenail each end
1 in. × 6 in. (25 mm × 150 mm) subfloor or less to each joist	2-8d common	Face nail
Wider than 1 in. × 6 in. (25 mm × 150 mm) subfloor to each joist	3-8d common	Face nail
2 in. (50 mm) subfloor to joist or girder	2-16d common	Blind and face nail
Sole plate to joist or blocking	16d at 16 in. (405 mm) oc 3-16d per 16 in. (405 mm)	Typical face nail Braced wall panels
Top plate to stud	2-16d common	End nail
Stud to sole plate	4-8d common 2-16d common	Toenail End nail
Double studs	16d at 24 in. (610 mm) oc	Face nail
Double top plates	16d at 16 in. (405 mm) oc 8-16d common	Typical face nail Lap splice
Blocking between joists or rafters to top plate	3-8d common	Toenail
Rim joist to top plate	8d at 6 in. (150 mm) oc	Toenail
Top plates, laps, and intersections	2-16d common	Face nail
Continuous header, two pieces	16d common	16 in. (405 mm) oc along edge
Ceiling joists to plate	3-8d common	Toenail
Continuous header to stud	4-8d common	Toenail
Ceiling joists, laps over partitions	3-16d common	Face nail
Ceiling joists to parallel rafters	3-16d common	Face nail
Rafter to plate	3-8d common	Toenail
1 in. (25 mm) brace to each stud and plate	2-8d common	Face nail
1 in. × 8 in. (25 mm × 205 mm) sheathing or less to each bearing wall	2-8d common	Face nail
Wider than 1 in. × 8 in. (25 mm × 205 mm) sheathing to each bearing wall	3-8d common	Face nail
Built-up corner studs	16d common	24 in. (610 mm) oc
Built-up girder and beams	20d common 2-20d common	32 in. (810 mm) oc At top and bottom, staggered at ends and at each splice
2 in. (51 mm) planks	16d common	At each bearing

(continues)

Copyright National Fire Protection Association
Provided by IHS under license with NFPA
No reproduction or networking permitted without license from IHS
Not for Resale

Table 45.6.8.2 *Continued*

Connection	Nail and Nailing Pattern[a]	Location
Wood Structural Panels and Particleboard[b]		See footnote g.
Subfloor, roof, and wall sheathing (to framing):		
≤½ in. (≤13 mm)	6d[c,d]	
19⁄32 in.–¾ in. (15.1 mm–19.1 mm)	8d[e] or 6d[f]	
⅞ in.–1 in. (22.2 mm–25.4 mm)	8d[c]	
1⅛ in.–1¼ in. (28.6 mm–31.8 mm)	10d[e] or 8d[f]	
Single floor (combination subfloor underlayment to framing):		
≤¾ in. (≤19.1 mm)	6d[f]	
⅞ in.–1 in. (22.2 mm–25.4 mm)	8d[f]	
1⅛ in.–1¼ in. (28.6 mm–31.8 mm)	10d[e] or 8d[f]	
Panel siding (to framing):		See footnote g.
≤½ in. (≤13 mm)	6d[h]	
⅝ in. (16 mm)	8d[h]	
Fiberboard sheathing:		See footnote g.
½ in. (13 mm)	No. 11 ga[i]	
	6d[j]	
	No. 16 ga[j]	
25⁄32 in. (20 mm)	No. 11 ga[i]	
	8d[e]	
	No. 16 ga[j]	
Interior paneling:		See footnote g.
¼ in. (6.3 mm)	4d[k]	
⅜ in. (10 mm)	6d[l]	

[a] Common or box nails are permitted to be used, except where otherwise stated.
[b] Nails spaced at 6 in. (150 mm) on center at edges, 12 in. (305 mm) at intermediate supports, except 6 in. (150 mm) at all supports, where spans are 48 in. (1220 mm) or more. Nails for wall sheathing are permitted to be common, box, or casing.
[c] Common or deformed shank.
[d] For roof sheathing applications, 8d nails are the minimum required for wood structural panels.
[e] Common.
[f] Deformed shank.
[g] Fasteners spaced 3 in. (75 mm) on center at exterior edges and 6 in. (150 mm) on center at intermediate supports.
[h] Corrosion-resistant siding or casing nail.
[i] Corrosion-resistant roofing nails with 7⁄16 in. (11 mm) diameter head and 1½ in. (38 mm) length for ½ in. (13 mm) sheathing, and 1¾ in. (44 mm) length for 25⁄32 in. (20 mm) sheathing.
[j] Corrosion-resistant staples with nominal 7⁄16 in. (11 mm) crown and 1⅛ in. (29 mm) length for ½ in. (13 mm) sheathing, and 1½ in. (38 mm) length for 25⁄32 in. (20 mm) sheathing. Panel supports at 16 in. (405 mm) [20 in. (510 mm) if strength axis in the long direction of the panel, unless otherwise marked].
[k] Casing or finish nails spaced 6 in. (150 mm) on panel edges, 12 in. (305 mm) at intermediate supports.
[l] Panel supports at 24 in. (610 mm). Casing or finish nails spaced 6 in. (150 mm) on panel edges, 12 in. (305 mm) at intermediate supports.

45.6.8.3 Sheathing nails or other approved sheathing connectors shall be driven so that their head or crown is flush with the surface of the sheathing.

45.6.8.4 Connections depending on joist hangers or framing anchors, ties, and other mechanical fastenings not otherwise covered shall be permitted to be used where approved.

45.6.8.5 Clips, staples, glues, and other approved methods of fastening shall be permitted where approved.

45.6.8.6 Fasteners for preservative-treated and fire-retardant-treated wood shall be of hot-dipped, zinc-coated galvanized steel; stainless steel; silicon bronze; or copper.

45.6.8.7 Fastenings for wood foundations shall be permitted to be in accordance with AF&PA Technical Report No. 7, *Permanent Wood Foundation System,* or the SPC publication *Permanent Wood Foundations: Design & Construction Guide.*

45.6.9 Protection Against Decay and Termites.

45.6.9.1 Where required, protection from decay and termites shall be provided by the use of naturally durable or preservative-treated wood.

45.6.9.2 *Naturally durable wood* shall be understood to be the heartwood of the following species, with the exception that an occasional piece of heartwood with corner sapwood shall be permitted to be included if 90 percent or more of the width of each side on which it occurs is heartwood:

(1) Decay resistant: redwood, cedars, black locust
(2) Termite resistant: redwood, eastern red cedar

45.6.9.3 *Preservative-treated wood* shall be understood to be pressure-impregnated wood meeting the retention requirements applicable to the species, products, treatment, and conditions of use in the applicable standards of the American Wood Preservers Association (AWPA).

--`,,```,,,,````-`-`,,`,,`,`,,`---

Copyright National Fire Protection Association
Provided by IHS under license with NFPA
No reproduction or networking permitted without license from IHS
Not for Resale

45.6.9.4 The requirements for protection shall be in accordance with 45.6.9.4.1 and 45.6.9.4.2.

45.6.9.4.1 In geographical areas where experience has demonstrated a specific need, approved naturally durable wood or preservative-treated wood shall be used for wood members that form the structural supports of the following:

(1) Buildings
(2) Balconies
(3) Porches
(4) Other permanent building appurtenances whose members are exposed to the weather without protection from a roof, eave, overhang, or other covering to prevent moisture or water accumulation on the surface or at joints between members

45.6.9.4.2 Depending on local experience, the structural members specified in 45.6.9.4.1 shall be permitted to include horizontal members, such as girders, joists, and decking; and vertical members, such as posts, poles, and columns.

45.6.9.5 The requirements for termite infestation areas shall be in accordance with 45.6.9.5.1 and 45.6.9.5.2.

45.6.9.5.1 In geographical areas where hazard of termite damage is known to be heavy, the authority having jurisdiction shall be permitted to require floor framing of naturally durable wood or preservative-treated wood, as addressed in 45.6.9.6 through 45.6.9.6.15, and soil treatment or other approved methods of termite protection.

45.6.9.5.2 In geographical areas where hazard of termite damage is known to be heavy, foam plastic insulation including, but not limited to, extruded or expanded polystyrene or polyisocyanurate, clearance between earth and foam plastics applied to the exterior wall shall not be less than 6 in. (150 mm). Foam plastic shall not be installed below grade on foundation walls or below grade on the exterior of slab foundations unless otherwise permitted by the following:

(1) Foam plastic insulation shall be permitted where an approved method of protecting the foam plastic and structure from subterranean termite damage is provided.
(2) Foam plastic insulation shall be permitted to be installed on the interior side of basement walls constructed of solid concrete.
(3) Foam plastic insulation shall be permitted to be applied to the exterior of slab foundations, provided that clearance between earth and foam plastics applied to the exterior wall is not less than 6 in. (150 mm).

45.6.9.6 The requirements for wood used above ground shall be in accordance with 45.6.9.6.1 through 45.6.9.6.16.

45.6.9.6.1 Wood installed above ground in the locations specified in 45.6.9.6 shall be either naturally durable wood or preservative-treated wood.

45.6.9.6.2 Preservative-treated wood shall be in accordance with AWPA C2, or AWPA C9, or other applicable AWPA standards for aboveground use.

45.6.9.6.3 Where wood joists or the bottom of a wood structural floor without joists is closer than 18 in. (455 mm), or wood girders are closer than 12 in. (305 mm), to the exposed ground in crawl spaces or unexcavated areas located within the perimeter of the building foundation, the floor assembly (including posts, girders, joists, and subfloor) shall be of either naturally durable wood or preservative-treated wood.

45.6.9.6.4 All wood framing members, including wood sheathing, that rest on exterior foundation walls and are less than 8 in. (205 mm) from exposed earth shall be of either naturally durable wood or preservative-treated wood. Wood framing members and furring strips attached directly to the interior of exterior masonry or concrete walls below grade shall be of either approved naturally durable wood or preservative-treated wood.

45.6.9.6.5 Sleepers and sills on a concrete or masonry slab that is in direct contact with earth shall be of either naturally durable wood or preservative-treated wood.

45.6.9.6.6 The ends of wood girders entering exterior masonry or concrete walls shall be provided with a ½ in. (13 mm) air space on top, sides, and end, unless either naturally durable wood or preservative-treated wood is used.

45.6.9.6.7 Clearance between wood siding and earth on the exterior of a building shall be not less than 6 in. (150 mm), except where siding, sheathing, and wall framing are of either naturally durable wood or preservative-treated wood.

45.6.9.6.8 Posts or columns supporting permanent structures and supported by a concrete or masonry slab or footing that is in direct contact with the earth shall be of either naturally durable wood or preservative-treated wood, unless otherwise permitted by the following:

(1) The requirement of 45.6.9.6.8 shall not apply to posts or columns that are either exposed to the weather or located in basements or cellars where both of the following criteria are met:
    (a) They are supported by concrete piers or metal pedestals projecting at least 1 in. (25 mm) above the slab or deck and 6 in. (150 mm) above exposed earth.
    (b) They are separated from exposed earth by an impervious moisture barrier.
(2) The requirement of 45.6.9.6.8 shall not apply to posts or columns in enclosed crawl spaces or unexcavated areas located within the periphery of the building where both of the following criteria are met:
    (a) They are supported by a concrete pier or metal pedestal at a height greater than 8 in. (205 mm) from exposed earth.
    (b) They are separated from exposed earth by an impervious moisture barrier.

45.6.9.6.9 The portions of glued laminated timbers that form the structural supports of a building or other structure, and are exposed to weather and not protected by a roof, an eave, or a similar covering, shall be pressure treated with preservative or manufactured from naturally durable or preservative-treated wood.

45.6.9.6.10 Wood in contact with the ground or fresh water shall comply with the following:

(1) Wood in contact with the ground (exposed earth) that supports permanent structures shall be of naturally durable wood (of a species for both decay and termite resistance) or preservative-treated wood.
(2) Preservative-treated wood shall be treated in accordance with AWPA C2, AWPA C9, or other applicable AWPA standard for soil or fresh water contact where used in the locations specified in 45.6.9.6.10.
(3) Untreated wood shall be permitted where such wood is continuously and entirely below the groundwater level or is submerged in fresh water.

Copyright National Fire Protection Association
Provided by IHS under license with NFPA
No reproduction or networking permitted without license from IHS
Not for Resale

45.6.9.6.11 The following posts and columns supporting permanent structures shall be of preservative-treated wood:

(1) Posts embedded in concrete in direct contact with the earth
(2) Posts embedded in concrete exposed to the weather
(3) Posts in direct contact with the earth

45.6.9.6.12 Wood structural members that support moisture-permeable floors or roofs that are exposed to the weather, such as concrete or masonry slabs, shall be of naturally durable or preservative-treated wood, unless separated from such floors or roofs by an impervious moisture barrier.

45.6.9.6.13 Naturally durable or preservative-treated wood shall be utilized for those portions of wood members that form the structural supports of buildings, balconies, porches, or similar permanent building appurtenances where such members are exposed to the weather without protection from a roof, an eave, an overhang, or other covering to prevent moisture or water accumulation on the surface or at joints between members.

45.6.9.6.14 The requirement of 45.6.9.6.13 shall not apply to buildings located in a geographical region where experience has demonstrated that climatic conditions preclude the need to use durable materials where the structure is exposed to weather.

45.6.9.6.15 Wood installed in retaining or crib walls shall be of preservative-treated wood that has been treated in accordance with AWPA C2 or AWPA C9 for protection from soil and fresh water contact, unless otherwise permitted by the following:

(1) Where the wall is not more than 24 in. (610 mm) in height and is separated from the lot line or a permanent building by a minimum distance equal to the height of the wall, the wall shall be permitted to be of untreated wood.
(2) Where a retaining wall or a crib wall is not more than 24 in. (610 mm) in height and is located on the lot line, the wall shall be permitted to be of naturally durable wood.
(3) Where a retaining wall or a crib wall is not more than 48 in. (1220 mm) in height and is separated from the lot line or a permanent building by a minimum distance equal to the height of the wall, the wall shall be permitted to be of naturally durable wood.

45.6.9.6.16* Lumber and plywood used in wood foundation systems shall be preservatively treated in compliance with AWPA C22, *Lumber and Plywood for Permanent Wood Foundations — Preservative Treatment by Pressure Processes.*

45.6.10 Wood Supporting Masonry or Concrete. Wood members shall not be used to permanently support the dead load of any masonry or concrete, unless otherwise permitted by the following:

(1) Masonry or concrete nonstructural floor or roof surfacing not more than 4 in. (100 mm) thick shall be permitted to be supported by wood members.
(2) Any structure shall be permitted to rest on wood piles constructed in accordance with the requirements of Chapter 36.
(3) Veneer of brick, concrete, or stone applied in an approved manner shall be permitted to be supported by an approved, treated wood foundation where the maximum height of veneer is not more than 30 ft (9150 mm) above the foundation.
(4) Where the veneer specified in 45.6.10(3) is used as an interior wall finish as permitted by ACI 530/ASCE 5/TMS 402, *Building Code Requirements for Masonry Structures*, to support masonry veneer or wood, it shall be permitted to be supported on wood floors that are designed to support the additional load and to limit the deflection and shrinkage to ⅛₀₀ of the span of the supporting members.
(5) Glass block masonry having an installed weight of 20 lb/ft^2 (958 kN/m^2) or less, and installed in an approved manner, shall be permitted to be supported by wood members, provided that supporting wood floors are designed to limit deflection and shrinkage to ⅛₀₀ of the span of the supporting members.

45.6.11 Fiberboard.

45.6.11.1 To ensure tight-fitting assemblies, fiberboard edges shall be manufactured with square, shiplapped, beveled, tongue-and-groove or U-shaped joints.

45.6.11.2 Where used as roof insulation in all types of construction, fiberboard shall be protected with an approved roof covering.

45.6.11.3 Where installed and fireblocked to comply with Chapter 8, fiberboard shall be permitted to be used as wall insulation in all types of construction.

45.6.11.4 In fire wall and fire separation wall constructions, unless treated to comply with a flame spread of 25 or less and a smoke developed index of 450 or less, as determined in accordance with NFPA 255, the boards shall be cemented directly to the concrete, masonry, or other noncombustible or limited-combustible base and shall be protected with an approved noncombustible or limited-combustible veneer anchored to the base without intervening air spaces.

45.6.11.5 Fiberboard wall insulation applied on the exterior of foundation walls shall be protected below ground level with a bituminous coating.

45.6.11.6 Where used as roof decking in open beam construction, fiberboard insulation roof decking shall have a nominal thickness of not less than 1 in. (25 mm).

Chapter 46 Glass and Glazing

46.1 General.

46.1.1 All glass and glazing construction shall be designed and constructed in accordance with this chapter, all other applicable requirements of this *Code*, and the referenced standards in Chapter 2.

46.1.2 Where the requirements of the referenced standards differ from the requirements of this chapter, the requirements of this chapter shall apply.

46.2 Special Definitions. A list of special terms used in this chapter follows.

46.2.1 Dalle Glass. A decorative composite glazing material made of individual pieces of glass that are embedded in a cast matrix of concrete or epoxy.

46.2.2 Decorative Glass. A carved, leaded, or Dalle glass or glazing material whose purpose is decorative or artistic, not functional; whose coloring, texture, or other design qualities or components cannot be removed without destroying the glazing material; and whose surface, or assembly into which it is incorporated, is divided into segments.

Copyright National Fire Protection Association
Provided by IHS under license with NFPA
No reproduction or networking permitted without license from IHS
Not for Resale

46.3 Labeling.

46.3.1 Each light shall bear the manufacturer's label designating the type and thickness of glass or glazing.

46.3.1.1 Safety glazing shall be identified in accordance with 46.5.1.1.

46.3.1.2 When approved by the authority having jurisdiction, labels shall not be required on glass, other than tempered glass, provided that an affidavit is furnished by the glazing contractor certifying that each light is glazed in accordance with the approved plans and specifications.

46.3.2 Each unit of tempered glass shall be permanently identified by the manufacturer, as specified in 46.3.2.1 and 46.3.2.2.

46.3.2.1 The permanent identification shall be etched or ceramic-fired on the glass and shall be visible when the unit is glazed.

46.3.2.2 Tempered spandrel glass shall be exempted from permanent labeling as described in 46.3.2 and shall be identified with a removable paper label by the manufacturer.

46.4 Louvered Windows or Jalousies.

46.4.1 Float, wired, and patterned glass in jalousies and louvered windows shall be no thinner than nominal 3⁄16 in. (5 mm) and no longer than 48 in. (1220 mm).

46.4.1.1 Where glass types, other than those described in 46.4.1, are used, the design shall be submitted to the authority having jurisdiction for approval.

46.4.1.2 Exposed glass edges shall be smooth.

46.4.2 Wired glass with wire exposed on longitudinal edges shall not be used in jalousies or louvered windows.

46.5 Human Impact Loads.

46.5.1 Testing and Classification of Glazing. Glazing shall be tested and classified as follows:

(1) Individual glazed areas, including glass mirrors, in hazardous locations such as those indicated in 46.5.2 shall pass the test requirements of CPSC 16 CFR 1201, *Safety Standard for Architectural Glazing Materials.*
(2) Glazing shall comply with the CPSC 16 CFR 1201 criteria for Category I or Category II as indicated in Table 46.5.1, unless otherwise required in 46.5.1(3) through (6).
(3) In other than educational occupancies, wired glass installed in fire door assemblies, fire window assemblies, and view panels in fire resistance–rated walls shall comply with ANSI Z97.1, *Glazing Materials Used in Buildings, Safety Performance Specifications and Methods of Test.*
(4) Light-transmitting materials used as glazing in hazardous locations shall comply with the weathering requirements of ANSI Z97.1.
(5) The requirements of 46.5.1 shall not apply to glass-block walls.
(6) Louvered windows and jalousies shall comply with Section 46.4.

46.5.1.1 Identification of Safety Glazing.

46.5.1.1.1 Except as indicated in 46.5.1.3, each pane of safety glazing installed in hazardous locations shall be identified by a label specifying whether the manufacturer or installer is the labeler and the safety glazing standard with which it complies, as well as the information specified in Section 46.3.

46.5.1.1.2 The label required by 46.5.1.1.1 shall be one of the following types:

(1) Acid etched
(2) Sand blasted
(3) Ceramic fired
(4) Embossed mark
(5) Laser burned
(6) Type that, once applied, cannot be removed without being destroyed

46.5.1.2 Alternative Identification of Safety Glazing. The requirements of 46.5.1.1 shall not apply where the following criteria are met:

(1) For other than tempered glass, labels shall not be required, provided that the authority having jurisdiction approves the submission of a certificate, affidavit, or other evidence confirming compliance with this *Code.*
(2) Tempered spandrel glass shall be permitted to be identified by the manufacturer with a removable paper label.

46.5.1.3 Multilight Assemblies.

46.5.1.3.1 Multilight glazed assemblies having individual lights not exceeding 1 ft^2 (0.09 m^2) in exposed area shall have at least one light in the assembly marked as indicated in 46.5.1.1.

46.5.1.3.2 Lights in the assembly, other than those described in 46.5.1.3.1, shall be marked "CPSC 16 CFR 1201" or "ANSI Z97.1," as appropriate.

46.5.2 Hazardous Locations.

46.5.2.1 The following specific hazardous locations shall require safety glazing materials:

(1) Glazing in swinging doors, except jalousies

Table 46.5.1 Minimum Category Classification of Glazing

Exposed Surface Area of One Side of One Light	Glazing in Storm or Combination Doors	Glazing in Doors	Glazed Panels Regulated by 46.5.2.1(8)	Glazed Panels Regulated by 46.5.2.1(7)	Doors and Enclosures Regulated by 46.5.2.1(5) and 46.5.2.1(6)	Patio-Type Sliding Glass Doors
≤9 ft^2	I	I	NR	I	II	II
>9 ft^2	II	II	II	II	II	II

For SI units, 1 ft^2 = 0.093 m^2.
NR: No requirements.

Copyright National Fire Protection Association
Provided by IHS under license with NFPA
No reproduction or networking permitted without license from IHS
Not for Resale

(2) Glazing in fixed panels and sliding panels of sliding-type door assemblies and panels in sliding and bifold closet door assemblies
(3) Glazing in storm doors
(4) Glazing in all unframed swinging doors
(5) Glazing in doors and enclosures for hot tubs, whirlpools, saunas, steam rooms, bathtubs, and showers
(6) Glazing in any portions of a building wall enclosing hot tubs, whirlpools, saunas, steam rooms, bathtubs, and showers where the bottom exposed edge of the glazing is less than 60 in. (1525 mm) above a standing surface
(7) Glazing in an individual fixed or operable panel adjacent to a door where both of the following conditions exist:
   (a) The nearest exposed edge of the glazing is within a 24 in. (610 mm) arc of either vertical edge of the door when in a closed position.
   (b) The bottom exposed edge of the glazing is less than 60 in. (1525 mm) above the floor or walking surface.
(8) Glazing in an individual fixed or operable panel, other than in those locations described in 46.5.2.1(5) through (7), where all of the following conditions exist:
   (a) The exposed area of an individual pane is greater than 9 ft^2 (0.84 m^2).
   (b) The exposed bottom edge is less than 18 in. (455 mm) above the floor.
   (c) The exposed top edge is greater than 36 in. (915 mm) above the floor.
   (d) One or more walking surface(s) is within 36 in. (915 mm) horizontally of the plane of the glazing.
(9) Glazing in guards and railings, including structural baluster panels and nonstructural in-fill panels, regardless of area or height above a walking surface
(10) Glazing in walls and fences enclosing indoor and outdoor swimming pools, hot tubs, and spas where all of the following conditions are present:
   (a) The bottom edge of the glazing on the pool or spa side is less than 60 in. (1525 mm) above a walking surface on the pool or spa side of the glazing.
   (b) The glazing is within 60 in. (1525 mm) horizontally of the water's edge of a swimming pool or spa.
(11) Glazing adjacent to stairways, landings, and ramps within 36 in. (915 mm) horizontally of a walking surface where the exposed surface of the glass is less than 60 in. (1525 mm) above the plane of the adjacent walking surface
(12) Glazing adjacent to stairways within 60 in. (1525 mm) horizontally of the bottom tread of a stairway in any direction where the exposed surface of the glass is less than 60 in. (1525 mm) above the nose of the tread

46.5.2.2 The requirements of 46.5.2.1 shall not apply where otherwise permitted by the following:

(1) Glazing in panels where there is an intervening wall or other permanent barrier between the door and glazing shall not be required to comply with 46.5.2.1(7).
(2) Glazing specified in 46.5.2.1(7) shall comply with 46.5.2.1(8) where located as follows:
   (a) In walls perpendicular to the plane of the door in a closed position in one- and two-family dwellings
   (b) In walls perpendicular to the plane of the door in a closed position within dwelling units of apartment occupancies
   (c) In walls perpendicular to the plane of the door when in a closed position in residential board and care occupancies, small facilities
   (d) Where access is through the door to a closet or storage area 36 in. (915 mm) or less in depth
(3) Safety glazing as specified in 46.5.2.1(8) shall not be required in the following installations:
   (a) Protective bar 1½ in. (38 mm) or more in height, capable of withstanding a horizontal load of 50 lb/ft (730 N/m) without contacting the glass, installed on the accessible sides of the glazing 34 in. to 38 in. (865 mm to 965 mm) above the floor
   (b) Outboard pane in insulating glass units or multiple glazing where the bottom exposed edge of the glass is 25 ft (7620 mm) or more above any grade, roof, walking surface, or other horizontal or sloped [within 45 degrees (0.79 rad) of horizontal] surface adjacent to the glass exterior
(4) Safety glazing as specified in 46.5.2.1(11) and (12) shall not be required for the following installations:
   (a) Where the side of a stairway, landing, or ramp has a guard or handrail, including balusters or in-fill panels, complying with the provisions of 11.2.2.4.6 and 35.6.5
   (b) Where the plane of the glass is greater than 18 in. (455 mm) from the railing

46.5.2.3 The following products, materials, and uses shall not be considered as creating hazardous locations:

(1) Openings in doors through which a 3 in. (75 mm) sphere is unable to pass
(2) Decorative glass as specified in 46.5.2.1(1), (7), and (8)
(3) Glazing materials used as curved glass panels in revolving doors
(4) Commercial refrigerated cabinet glazed doors
(5) Glass block panels
(6) Louvered windows and jalousies complying with the requirements of Section 46.4
(7) Mirrors and other glass panels mounted or hung on a surface that provides a continuous backing support

46.5.3 Fire Department Access Panels.

46.5.3.1 Fire department glass access panels shall be of tempered glass.

46.5.3.2 For insulating glass units, all panes shall be tempered glass.

46.6 Glass in Handrails and Guards. Glass used as structural balustrade panels in railings shall be constructed of one of the following:

(1) Single fully tempered glass
(2) Laminated fully tempered glass
(3) Laminated heat-strengthened glass

46.6.1 Glazing in railing in-fill panels shall meet the following requirements:

(1) Glazing in railing in-fill panels shall be of an approved safety glazing material that conforms to the provisions of Section 46.6.
(2) For all glazing types, the minimum nominal thickness shall be ¼ in. (6.4 mm).
(3) Fully tempered glass and laminated glass shall comply with Category II of CPSC 16 CFR 1201.

Copyright National Fire Protection Association
Provided by IHS under license with NFPA
No reproduction or networking permitted without license from IHS
Not for Resale

46.6.2 Structural balustrade panels shall meet the following requirements:

(1) The panels and their support system shall be designed to withstand the loads specified in 35.6.5.
(2) A safety factor of 4 shall be used.

46.6.3 Each handrail or guard section shall be supported by a minimum of three glass balusters, or shall be otherwise supported to remain in place if one baluster panel fails, and one of the following criteria shall be met:

(1) An attached handrail or guard shall be provided.
(2) The glass balusters shall be laminated glass with two or more glass plies of equal thickness and the same glass type, and the panels shall be designed to withstand the loads specified in 35.6.5 and any other structural requirements for a top rail.

46.6.4 Glazing materials shall not be installed in railings in parking garages, except for pedestrian areas not exposed to impact from vehicles.

46.7 Glazing in Athletic Facilities.

46.7.1 General. Glazing in athletic facilities, and for similar uses subject to impact loads, that forms whole or partial wall sections, or that is used as a door or part of a door, shall comply with 46.7.2 and 46.7.3.

46.7.2 Racquetball and Squash Courts.

46.7.2.1 Test methods and loads for individual glazed areas of racquetball and squash courts subject to impact loads shall conform to those of CPSC 16 CFR 1201, with impacts being applied at a height of 59 in. (1500 mm) above the playing surface to an actual or simulated glass wall installation with fixtures, fittings, and methods of assembly identical to those used in practice.

46.7.2.2 Glass walls shall meet the following criteria:

(1) A glass wall used in a racquetball or squash court, or for similar use subject to impact loads, shall remain intact following a test impact.
(2) The deflection of such walls shall be not greater than 1½ in. (38 mm) at the point of impact for a drop height of 48 in. (1220 mm).

46.7.2.3 Glass doors shall meet the following criteria:

(1) Glass doors shall remain intact following a test impact at the prescribed height in the center of the door.
(2) The relative deflection between the edge of a glass door and the adjacent wall shall not exceed the thickness of the wall plus ½ in. (13 mm) for a drop height of 48 in. (1220 mm).

46.7.3 Gymnasiums and Basketball Courts. Glazing in gymnasiums, multipurpose gymnasiums, basketball courts, exercise rooms, and similar athletic facilities subject to human impact loads shall comply with Category II of CPSC 16 CFR 1201.

46.8 Sloped Glazing and Skylights.

46.8.1 Section 46.8 shall apply to the installation of glass and other transparent, translucent, or opaque glazing material installed at a slope more than 15 degrees (0.26 rad) from the vertical plane, including glazing materials in skylights, roofs, and sloped walls.

46.8.2 The requirements for allowable glazing materials and limitations shall be as follows:

(1) Sloped glazing shall be permitted to be of any of the following materials, subject to the limitations specified:
   (a) For monolithic glazing systems, the glazing material of the single light or layer shall be permitted to be any of the following:
      i. Laminated glass with a minimum 30 mil (0.76 mm) polyvinyl butyral (or equivalent) interlayer
      ii. Wired glass
      iii. Light-transmitting plastic materials meeting the requirements of Chapter 48
      iv. Heat-strengthened glass
      v. Fully tempered glass
   (b) For multiple-layer glazing systems, each light or layer shall consist of any of the glazing materials specified in 46.8.2(1)(a).
(2) Annealed glass shall be permitted to be used as specified within 46.8.3.6(2) and (3).

46.8.3 Screens shall meet the requirements of 46.8.3.1 through 46.8.3.6.

46.8.3.1 Where used in monolithic glazing systems, heat-strengthened glass and fully tempered glass shall have screens installed below the glazing material.

46.8.3.2 The screens and their fastenings shall meet the following requirements:

(1) They shall be capable of supporting twice the weight of the glazing.
(2) They shall be installed within 4 in. (100 mm) of the glass.

46.8.3.3 The screens shall be constructed of a noncombustible material not thinner than No. 12 B&S gauge (0.0808 in.) with mesh not larger than 1 in. × 1 in. (25 mm × 25 mm).

46.8.3.4 In a corrosive atmosphere, structurally equivalent, noncorrosive screen materials shall be used.

46.8.3.5 Heat-strengthened glass, fully tempered glass, and wired glass, where used in multiple-layer glazing systems as the bottom glass layer over the walking surface, shall be equipped with screening that conforms to the requirements for monolithic glazing systems.

46.8.3.6 In monolithic and multiple-layer sloped glazing systems, the following modifications to the requirements of 46.8.3.1 through 46.8.3.5 shall apply:

(1) Fully tempered glass installed without protective screens where glazed between intervening floors at a slope of 30 degrees (0.52 rad) or less from the vertical plane shall have the highest point of the glass 10 ft (3050 mm) or less above the walking surface.
(2) Screens shall not be required below any glazing material, including annealed glass, where the walking surface below the glazing material is permanently protected from the risk of falling glass or the area below the glazing material is not a walking surface.
(3) Any glazing material, including annealed glass, shall be permitted to be installed without screens in the sloped glazing systems of commercial or detached noncombustible greenhouses used exclusively for growing plants and not open to the public, provided that the height of the greenhouse at the ridge does not exceed 30 ft (9150 mm) above grade.

Copyright National Fire Protection Association
Provided by IHS under license with NFPA
No reproduction or networking permitted without license from IHS
Not for Resale

(4) Screens shall not be required within individual dwelling units in one- and two-family dwellings; within dwelling units of apartment occupancies; or within residential board and care occupancies, small facilities, where fully tempered glass is used as single glazing, or as both panes in an insulating glass unit, and where the following conditions are met:
   (a) Each pane of the glass is 16 ft^2 (1.5 m^2) or less.
   (b) The highest point of the glass is 12 ft (3660 mm) or less above any walking surface or other accessible area.
   (c) The glass thickness is 3⁄16 in. (4.8 mm) or less.

(5) Screens shall not be required for laminated glass with a 15 mil (0.38 mm) polyvinyl butyral (or equivalent) interlayer used within individual dwelling units in one- and two-family dwellings; within dwelling units of apartment occupancies; or within residential board and care occupancies, small facilities, where the following conditions are met:
   (a) Each pane of glass is 16 ft^2 (1.5 m^2) or less.
   (b) The highest point of the glass is 12 ft (3660 mm) or less above a walking surface or other accessible area.

46.8.4 The requirements for sloped glazing and skylight frames shall be as follows:

(1) In Type I and Type II construction, sloped glazing and skylight frames shall be constructed of noncombustible materials.
(2) In structures where acid fumes deleterious to metal are incidental to the use of the buildings, approved pressure-treated wood or other approved noncorrosive materials shall be permitted to be used for sash and frames.
(3) Sloped glazing and skylights shall be designed for tributary roof loads in Section 35.7.
(4) Skylights set at an angle of less than 45 degrees (0.79 rad) from the horizontal plane shall be mounted at least 4 in. (100 mm) above the plane of the roof on a curb construction as required for the frame.
(5) Skylights shall not be installed in the plane of the roof where the roof pitch is less than 45 degrees (0.79 rad) from the horizontal.
(6) Curbs for skylights shall not be required on roofs with a minimum slope of 14 degrees (3 units vertical in 12 units horizontal) in one- and two-family dwellings. All unit skylights installed in a roof with a pitch flatter than 14 degrees (0.25 rad) shall be mounted at least 4 in. (100 mm) above the plane of the roof on a curb construction as required for the frame, unless otherwise specified in the manufacturer's installation instructions.

46.9 Glass Supports.

46.9.1 To be considered firmly supported, the framing members for each individual pane of glass shall be designed so the deflection of the edge of the glass perpendicular to the glass pane does not exceed 1⁄175 of the glass edge length or 3⁄4 in. (19 mm), whichever is less, when subjected to the larger of the positive or negative load where loads are combined as specified in Section 35.15.

46.9.2 Where the firm support specified in 46.9.1 is not provided on all sides (for example, three sides, two sides, cantilever, or highly flexible), the following criteria shall be met:

(1) Detailed shop drawings and specifications and rational analysis or test data, or both, assuring safe performance for the specific installation shall be prepared by engineers experienced in such work.
(2) The drawings and specifications and analysis or test data, or both, shall be submitted to, and formally approved by, the authority having jurisdiction.

46.10 Wind, Snow, and Dead Loads on Glass.

46.10.1 Glass Sloped 15 Degrees (0.26 rad) or Less from Vertical.

46.10.1.1 Glass sloped 15 degrees (0.26 rad) or less from vertical in windows, curtain and window walls, doors, and other exterior applications shall be designed to resist the wind loads in Section 35.9 for components and cladding. The load resistance of glass under uniform load shall be determined in accordance with ASTM E 1300, *Standard Practice for Determining Load Resistance of Glass in Buildings.*

46.10.1.2 The design of vertical glazing shall be based on the following equation:

$$F_{gw} \le F_{ga} \qquad \textbf{(46.10.1.2)}$$

where:
F_{gw} = wind load on glass, as calculated in Section 35.9 [psf (kN/m^2)]
F_{ga} = short duration load resistance of glass as determined in accordance with ASTM E 1300 [psf (kN/m^2)]

46.10.2 Glass Sloped More than 15 Degrees (0.26 rad) from Vertical.

46.10.2.1 Glass sloped more than 15 degrees (0.26 rad) from vertical in skylights, sunspaces, sloped roofs, and other exterior applications shall be designed to resist the most critical of the following combinations of loads:

(1)
$$F_g = W_o - D \qquad \textbf{(46.10.2.1a)}$$

(2)
$$F_g = W_i + D + 0.5\ S \qquad \textbf{(46.10.2.1b)}$$

(3)
$$F_g = 0.5\ W_i + D + S \qquad \textbf{(46.10.2.1c)}$$

where:
F_g = total load on glass [psf (kN/m^2)]
W_o = outward wind force, as calculated in Section 35.9 [psf (kN/m^2)]
D = glass dead load [psf (kN/m^2)] *(see 46.10.2.2)*
W_i = inward wind force, as calculated in Section 35.9 [psf (kN/m^2)]
S = snow load as determined in Section 35.8 [psf (kN/m^2)]

46.10.2.2 The glass dead load, D, shall be defined as follows:

(1) For glass sloped 30 degrees (0.52 rad) or less from horizontal,

$$D = 13\ t_g \quad \text{(for SI, } D = 0.0245\ t_g\text{)} \qquad \textbf{(46.10.2.2a)}$$

Copyright National Fire Protection Association
Provided by IHS under license with NFPA
No reproduction or networking permitted without license from IHS
Not for Resale

(2) For glass sloped more than 30 degrees (0.52 rad) from horizontal,

$$D = 13\ t_g \cos\theta \quad \text{(for SI, } D = 0.0245\ t_g \cos\theta\text{)} \qquad \textbf{(46.10.2.2b)}$$

where:
t_g = total glass thickness of glass panes and plies [in. (mm)]
θ = angle of slope from horizontal

46.10.2.3 The design of sloped glazing shall be based on the following equation:

$$F_g \le F_{ga} \qquad \textbf{(46.10.2.3)}$$

where:
F_g = total load on glass determined from load combinations of equations 46.10.2.1a through 46.10.2.1c [psf (kN/m^2)]
F_{ga} = short duration load resistance of glass as determined according to ASTM E 1300 for load equations 46.10.2.1a and 46.10.2.1b; or the long duration load resistance of the glass as determined according to ASTM E 1300 for equation 46.10.2.1c [psf (kN/m^2)]

46.10.3 Wired, Patterned, and Sandblasted Glass.

46.10.3.1 Wired Glass.

46.10.3.1.1 Wired glass sloped 15 degrees (0.26 rad) or less from vertical in windows, curtain and window walls, doors, and other exterior applications shall be designed to resist the wind loads in Section 35.9 for components and cladding according to the following formula:

$$F_{gw} < 0.5\ F_{ge} \qquad \textbf{(46.10.3.1.1)}$$

where:
F_{gw} = wind load on glass, as calculated in Section 35.9 [psf (kN/m^2)]
F_{ge} = nonfactored load from ASTM E 1300 using thickness designation for monolithic glass not greater than the thickness of wired glass [psf (kN/m^2)]

46.10.3.1.2 Wired glass sloped more than 15 degrees (0.26 rad) from vertical in skylights, sunspaces, sloped roofs, and other exterior applications shall be designed to resist the most critical of the combinations of loads from 46.10.2.

46.10.3.1.2.1 For equations 46.10.2.1a and 46.10.2.1b, the following formula shall apply:

$$F_g < 0.5\ F_{ge} \qquad \textbf{(46.10.3.1.2)}$$

where:
F_g = total load on glass [psf (kN/m^2)]
F_{ge} = nonfactored load from ASTM E 1300 [psf (kN/m^2)]

46.10.3.1.2.2 For equation 46.10.2.1c, the following formula shall apply:

$$F_g < 0.3\ F_{ge} \qquad \textbf{(46.10.3.1.3)}$$

where:
F_g = total load on glass [psf (kN/m^2)]
F_{ge} = nonfactored load from ASTM E 1300 [psf (kN/m^2)]

46.10.3.2 Patterned Glass.

46.10.3.2.1 Patterned glass sloped 15 degrees (0.26 rad) or less from vertical in windows, curtain and window walls, doors, and other exterior applications shall be designed to resist the wind loads in Section 35.9 for components and cladding according to the following formula:

$$F_{gw} < 1.0\ F_{ge} \qquad \textbf{(46.10.3.2.1)}$$

where:
F_{gw} = wind load on glass, as calculated in Section 35.9 [psf (kN/m^2)]
F_{ge} = nonfactored load from ASTM E 1300 [psf(kN/m^2)]. The value for F_{ge} for patterned glass shall be based on the thinnest part of the glass. Interpolation between nonfactored load charts in ASTM E 1300 shall be permitted.

46.10.3.2.2 Patterned glass sloped more than 15 degrees (0.26 rad) from vertical in skylights, sunspaces, sloped roofs, and other exterior applications shall be designed to resist the most critical of the combinations of loads from 46.10.2.

46.10.3.2.2.1 For equations 46.10.2.1a and 46.10.2.1b, the following formula shall apply:

$$F_g < 1.0\ F_{ge} \qquad \textbf{(46.10.3.2.3)}$$

where:
F_g = total load on glass [psf (kN/m^2)]
F_{ge} = nonfactored load from ASTM E 1300 [psf (kN/m^2)]. The value for F_{ge} for patterned glass shall be based on the thinnest part of the glass. Interpolation between the nonfactored load charts in ASTM E 1300 shall be permitted.

46.10.3.2.2.2 For equation 46.10.2.1c, the following formula shall apply:

$$F_g < 0.6F_{ge} \qquad \textbf{(46.10.3.2.4)}$$

where:
F_g = total load on glass [psf (kN/m^2)]
F_{ge} = nonfactored load from ASTM E 1300 [psf (kN/m^2)]. The value for F_{ge} for patterned glass shall be based on the thinnest part of the glass. Interpolation between the nonfactored load charts in ASTM E 1300 shall be permitted.

46.10.3.3 Sandblasted Glass. Sandblasted glass sloped 15 degrees (0.26 rad) or less from vertical in windows, curtain and window walls, doors, and other exterior applications shall be designed to resist the wind loads in Section 35.9 for components and cladding according to the following formula:

$$F_g < 0.5\ F_{ge} \qquad \textbf{(46.10.3.3)}$$

where:
F_g = total load on glass [psf (kN/m^2)]
F_{ge} = nonfactored load from ASTM E 1300 [psf (kN/m^2)]. The value for sandblasted glass is for moderate levels of sandblasting.

--`,,```,,,,````-`-`,,`,,`,`,,`---

Copyright National Fire Protection Association
Provided by IHS under license with NFPA
No reproduction or networking permitted without license from IHS
Not for Resale

46.10.4 Other Designs. For designs outside the scope of Section 46.10, an analysis or test data ensuring safe performance for the specific installation shall be prepared by a registered design professional.

46.11 Fire Protection Glazing. Fire protection glazing shall comply with the requirements in Chapter 8.

Chapter 47 Gypsum Board, Lath, and Plaster

47.1 General Requirements.

47.1.1 Application.

47.1.1.1 The requirements of this chapter shall apply to the use of gypsum board, gypsum veneer plaster, gypsum plaster, and portland cement plaster.

47.1.1.2 Gypsum board, gypsum veneer plaster, gypsum plaster, and portland cement plaster systems and materials shall be constructed in accordance with this chapter and all other applicable requirements of this *Code*.

47.1.2 Identification and Storage of Materials. All materials shall be delivered, stored, and identified in accordance with the provisions of the material standard referenced by this *Code*.

47.1.3 Fire Rating Required. Where required to provide a fire resistance rating, lath, plaster, and gypsum board systems or assemblies shall meet the requirements of Chapter 8 of this *Code*.

47.1.4 Inspection. Lath and gypsum wallboard shall be inspected in accordance with 1.7.6.6.3.4(F) of this *Code*.

47.1.5 Special Definitions. A list of special terms used in this chapter follows.

47.1.5.1 Dash-Bond Coat (of plaster). A thick, wet mixture of aggregate and portland cement mixed in proportions of two parts aggregate to one part portland or plastic cement, dashed onto a monolithic surface to improve the mechanical key for subsequent plaster coats.

47.1.5.2 Gypsum Base for Veneer Plaster. A gypsum board used as the base for application of a gypsum veneer plaster.

47.1.5.3 Gypsum Board. The generic name for a family of sheet products consisting of a noncombustible core primarily of gypsum with paper surfacing.

47.1.5.4 Gypsum Lath. A gypsum board used as the base for application of gypsum plaster.

47.1.5.5 Gypsum Panel Products. The general name for a family of sheet products consisting essentially of gypsum.

47.1.5.6 Gypsum Wallboard. A gypsum board used primarily as an interior surfacing for building structures.

47.1.5.7 Moist Curing. A method for the retention of moisture for hydration of portland cement plaster.

47.1.5.8 Plaster.

47.1.5.8.1 Gypsum Plaster. The generic name for a family of powdered cementitious products consisting primarily of calcined gypsum with additives to modify physical characteristics, and having the ability, when mixed with water, to produce a plastic mortar or slurry that can be formed to the desired shape by various methods and that subsequently sets to a hard, rigid mass.

47.1.5.8.2 Gypsum Veneer Plaster. A calcined gypsum plaster specially manufactured to provide high strength, hardness, and abrasion resistance when applied in thin coats over a gypsum base for veneer plasters.

47.1.5.8.3 Portland Cement Plaster. A plaster mix in which portland cement or combinations of portland and masonry cements or portland cement and lime are the principal cementitious materials mixed with aggregate.

47.1.5.9 Surface.

47.1.5.9.1 Interior Surface. A surface other than a weather-exposed surface.

47.1.5.9.2* Weather-Exposed Surface. The surface of walls, ceilings, roofs, soffits, and similar surfaces exposed to the weather.

47.2 Gypsum Board and Gypsum Veneer Plaster.

47.2.1 General.

47.2.1.1 Exposure to Weather and Water.

47.2.1.1.1 Gypsum wallboard shall not be installed where it will be directly exposed to the weather or to water and shall not be applied until weather protection for the application is provided.

47.2.1.1.2 Gypsum sheathing shall be installed and protected from exposure in compliance with ASTM C 1280, *Standard Specification for Application of Gypsum Sheathing*.

47.2.1.2 Treatment of Joints in Fire Resistance–Rated Systems.

47.2.1.2.1 The face layers of all fire resistance–rated gypsum board systems, except those tested with a material equivalent to joint treatment or those tested without joint treatment, shall have joints and fastener heads treated as required by the fire resistance listing.

47.2.1.2.2 Taping and finishing of joints and fasteners shall not be required in systems where square edge or tongue-and-groove edge gypsum sheathing is installed.

47.2.1.3 Fire Resistance Rating Required.

47.2.1.3.1 Where gypsum board systems are required to be fire rated, details of construction shall be in accordance with the applicable fire resistance listing.

47.2.1.3.2 Fire-rated gypsum board systems shall be constructed in accordance with GA-600, *Fire Resistance Design Manual*, or other recognized resource.

47.2.1.4 Shear Values.

47.2.1.4.1 Walls. Shear values for walls sheathed with gypsum board shall be in accordance with 44.7.5 or Section 45.4.

47.2.1.4.2 Ceilings.

47.2.1.4.2.1 Values for shear diaphragms of gypsum board wood-framed ceiling assemblies shall not exceed those in Table 47.2.1.4.2.1.

47.2.1.4.2.2 Gypsum board horizontal diaphragms shall not be used to resist loads imposed by masonry or concrete construction.

47.2.1.4.2.3 The maximum allowable diaphragm proportions shall be 1½ to 1 spanning between shear-resisting elements.

Copyright National Fire Protection Association
Provided by IHS under license with NFPA
No reproduction or networking permitted without license from IHS
Not for Resale

Table 47.2.1.4.2.1 Shear Values for Shear Diaphragms of Gypsum Board Wood-Framed Ceiling Assemblies[a,b]

Gypsum Board Material	Minimum Material Thickness (in.)	Spacing of Framing Members (in.)	Maximum Fastener Spacing (in.)	Shear Value (lb/ft of wall)	Minimum Fastener Size[c,d]
Gypsum wallboard, gypsum base for veneer plaster	½	16 oc	7	90	5d cooler or wallboard nails
Gypsum wallboard, gypsum base for veneer plaster	½	24 oc	7	70	5d cooler or wallboard nails

For SI units, 1 in. = 25.4 mm; 1 lb/ft = 14.5939 N/m.

[a]Diaphragms are not to be used to resist loads imposed by masonry or concrete construction. Values are not cumulative with other horizontal diaphragm values. Values shown are for short-term loading due to wind or due to seismic loading. Values are to be reduced 25 percent for normal loading.

[b]All perimeter edges blocked at the top plate of wall using wood framing members not less than 2 in. × 6 in. nominal (38 mm × 145 mm) in dimension, installed flat over the top plate to provide a nailing attachment surface for the gypsum board not less than 2 in. (51 mm) in width.

[c]Alternate nails can be substituted, provided that their dimensions are equal to or greater than those of the item described.

[d]Type S or Type W drywall screws, a minimum of 1¼ in. (32 mm) in length, can be substituted for the prescribed nails.

47.2.1.4.2.4 Resistance by rotation or cantilevered conditions shall not be permitted.

47.2.1.4.2.5 The requirements of 47.2.1.4.2.5(A) and (B) shall apply to gypsum board used in a diaphragm ceiling.

(A) The gypsum board shall be installed perpendicular to ceiling framing members.

(B) The end joints of adjacent courses of gypsum board shall not occur on the same joist.

47.2.1.5 Framing Support Materials.

47.2.1.5.1 Steel Support. Steel framing support materials shall comply with ASTM C 645, *Standard Specification for Nonstructural Steel Framing Members*, or ASTM C 955, *Standard Specification for Load-Bearing (Transverse and Axial) Steel Studs, Runners (Tracks), and Bracing or Bridging for Screw Application of Gypsum Panel Products and Metal Plaster Bases*, as specified by Section 44.7 of this *Code*.

47.2.1.5.2 Wood Support.

47.2.1.5.2.1 Wood support materials shall be not less than 2 in. nominal (38 mm) in their least dimension.

47.2.1.5.2.2 Wood furring strips installed over solid backing shall be not less than 1 in. × 2 in. nominal (19 mm × 38 mm) in dimension.

47.2.2 Gypsum Board Materials.

47.2.2.1 Gypsum board materials shall comply with the following:

(1) ASTM C 1177, *Standard Specification for Glass Mat Gypsum Substrate for Use as Sheathing*
(2) ASTM C 1178, *Standard Specification for Glass Mat Water-Resistant Gypsum Backing Panel*
(3) ASTM C 1278, *Standard Specification for Fiber-Reinforced Gypsum Panel*
(4) ASTM C 1396, *Standard Specification for Gypsum Board*

47.2.2.2 Accessories used in the application of gypsum board shall comply with ASTM C 1047, *Standard Specification for Accessories for Gypsum Wallboard and Gypsum Veneer Base*.

47.2.2.3 Joint treatment materials used in the application of gypsum board shall comply with ASTM C 475, *Standard Specification for Joint Compound and Joint Tape for Finishing Gypsum Board*.

47.2.2.4 Fasteners used in the application of gypsum board shall comply with one of the following:

(1) ASTM C 514, *Standard Specification for Nails for the Application of Gypsum Board*
(2) ASTM F 547, *Standard Terminology of Nails for Use with Wood and Wood-Base Materials*
(3) ASTM C 954, *Standard Specification for Steel Drill Screws for the Application of Gypsum Panel Products or Metal Plaster Bases to Steel Studs from 0.033 in. (0.84 mm) to 0.112 in. (2.84 mm) in Thickness*
(4) ASTM C 1002, *Standard Specification for Steel Self-Piercing Tapping Screws for the Application of Gypsum Panel Products or Metal Plaster Bases to Wood Studs or Steel Studs*

47.2.2.5 Adhesives used for fastening gypsum board to wood framing shall comply with ASTM C 557, *Standard Specification for Adhesives for Fastening Gypsum Wallboard to Wood Framing*.

47.2.3 Gypsum Board Installation.

47.2.3.1 Application and finishing of gypsum board shall comply with ASTM C 840, *Standard Specification for Application and Finishing of Gypsum Board*, or GA-216, *Application and Finishing of Gypsum Board*.

47.2.3.2 Installation of gypsum sheathing shall comply with ASTM C 1280.

47.2.4 Gypsum Veneer Plaster Materials.

47.2.4.1 Gypsum base for veneer plaster shall comply with ASTM C 588, *Standard Specification for Gypsum Base for Veneer Plasters*.

Copyright National Fire Protection Association
Provided by IHS under license with NFPA
No reproduction or networking permitted without license from IHS
Not for Resale

47.2.4.2 Gypsum veneer plaster shall comply with ASTM C 587, *Standard Specification for Gypsum Veneer Plaster.*

47.2.4.3 Accessories used in the application of gypsum base for veneer plaster shall comply with ASTM C 1047.

47.2.4.4 Fasteners used in the application of gypsum base for veneer plaster shall comply with the following standards:

(1) ASTM C 514, *Standard Specification for Nails for the Application of Gypsum Board*
(2) ASTM F 547, *Standard Terminology of Nails for Use with Wood and Wood-Based Materials*
(3) ASTM C 954, *Standard Specification for Steel Drill Screws for the Application of Gypsum Panel Products or Metal Plaster Bases to Steel Studs from 0.033 in. (0.84 mm) to 0.112 in. (2.84 mm) in Thickness*
(4) ASTM C 1002, *Standard Specification for Steel Self-Piercing Tapping Screws for the Application of Gypsum Panel Products or Metal Plaster Bases to Wood Studs or Steel Studs*

47.2.4.5 Adhesives used for fastening gypsum base for veneer plaster to wood framing shall comply with ASTM C 557.

47.2.5 Gypsum Veneer Plaster Installation.

47.2.5.1 Application of gypsum base that is to receive gypsum veneer plaster shall comply with ASTM C 844, *Standard Specification for Application of Gypsum Base to Receive Gypsum Veneer Plaster.*

47.2.5.2 Application of gypsum veneer plaster shall comply with ASTM C 843, *Standard Specification for Application of Gypsum Veneer Plaster.*

47.3 Gypsum Lath and Gypsum Plaster.

47.3.1 General. Gypsum plaster shall not be installed on building exterior or weather-exposed surfaces.

47.3.2 Materials.

47.3.2.1 Gypsum lath and gypsum plaster materials shall comply with the following:

(1) ASTM C 28, *Standard Specification for Gypsum Plasters*; ASTM C 59, *Standard Specification for Gypsum Casting Plaster and Gypsum Molding Plaster*; or ASTM C 61, *Standard Specification for Gypsum Keenes Cement*
(2) ASTM C 206, *Standard Specification for Finishing Hydrated Lime*
(3) ASTM C 847, *Standard Specification for Metal Lath*; ASTM C 933, *Standard Specification for Welded-Wire Lath*; or ASTM C 1032, *Standard Specification for Woven-Wire Plaster Base*
(4) ASTM C 1396, *Standard Specification for Gypsum Board*

47.3.2.2 Inorganic aggregates, where used with gypsum plaster, shall comply with ASTM C 35, *Standard Specification for Inorganic Aggregates for Use in Gypsum Plaster.*

47.3.2.3 Bonding compounds, where used with gypsum plaster, shall comply with ASTM C 631, *Standard Specification for Bonding Compounds for Interior Gypsum Plastering.*

47.3.3 Installation.

47.3.3.1 Lathing and Furring.

47.3.3.1.1 The installation of interior lathing and furring used to support gypsum plaster shall comply with ASTM C 841, *Standard Specification for Installation of Interior Lathing and Furring.*

47.3.3.1.2 Grounds, where installed, shall provide for a thickness of plaster not less than that required by ASTM C 842, *Standard Specification for Application of Interior Gypsum Plaster.*

47.3.3.2 Plaster.

47.3.3.2.1 The installation of gypsum plaster shall comply with ASTM C 842.

47.3.3.2.2 Ceiling surfaces that require a thickness of plaster greater than that shown in ASTM C 842 shall have metal lath or wire fabric lath installed before plastering.

47.4 Portland Cement Plaster.

47.4.1 General.

47.4.1.1 Shear Values. Shear values for walls sheathed with lath and plaster shall be in accordance with Section 45.4.

47.4.1.2 Temperature Requirements.

47.4.1.2.1 Plaster coats shall be protected from freezing for a period of not less than 24 hours after set has occurred.

47.4.1.2.2 Plaster shall be applied when the ambient temperature is higher than 40°F (4°C), unless provisions are made to keep the temperature in the work area above 40°F (4°C) for not less than 48 hours prior to, during, and subsequent to application of plaster.

47.4.1.3 Weather-Resistive Barriers.

47.4.1.3.1 Weather-resistive barriers shall be installed as required in Section 37.3.

47.4.1.3.2 Weather-resistive barriers applied over wood-based sheathing shall consist of two layers of Federal Specification UUB-790a, *Specification for Building Paper, Vegetable Fiber: Kraft, Waterproofed, Water Repellent, and Fiber Resistant,* Grade D paper.

47.4.1.4 Masonry and Concrete Surfaces.

47.4.1.4.1 Masonry and concrete surfaces shall comply with 47.4.1.4.1.1 and 47.4.1.4.1.2.

47.4.1.4.1.1 Surfaces shall be clean, free from efflorescence, from form-oil, or from other elements that would interfere with bonding.

47.4.1.4.1.2 Surfaces shall have the roughness, suction, and dampness to provide the bond for the plaster.

47.4.1.4.2 If the surface is not sufficiently rough, as specified in 47.4.1.4.1.2, it shall be prepared by one or more of the following methods:

(1) Sandblasting
(2) Wire brushing
(3) Acid etching
(4) Chipping
(5) Application of a dash-bond coat left untrowled, undisturbed, and moist-cured for not less than 24 hours
(6) Application of an approved bonding compound

47.4.2 Materials.

47.4.2.1 Plaster. Portland cement plaster materials shall conform with the following:

(1) ASTM C 91, *Standard Specification for Masonry Cement*
(2) ASTM C 150, *Standard Specification for Portland Cement*
(3) ASTM C 206, *Standard Specification for Finishing Hydrated Lime*
(4) ASTM C 595, *Standard Specification for Blended Hydraulic Cements*
(5) ASTM C 1328, *Standard Specification for Plastic (Stucco) Cement*

Copyright National Fire Protection Association
Provided by IHS under license with NFPA
No reproduction or networking permitted without license from IHS
Not for Resale

47.4.2.2 Lath and Accessories.

47.4.2.2.1 Lath used for the support of portland cement plaster shall comply with ASTM C 847, ASTM C 933, or ASTM C 1032.

47.4.2.2.2 Lath, lath fasteners, and lath attachment devices shall be corrosion resistant.

47.4.2.3 Inorganic Aggregates. Inorganic aggregates used with portland cement plaster shall comply with ASTM C 35.

47.4.2.4 Sand. Sand used with portland cement plaster shall comply with ASTM C 897, *Standard Specification for Aggregate for Job-Mixed Portland Cement-Based Plasters.*

47.4.2.5 Bonding Compounds. Bonding compounds used with portland cement plaster shall comply with ASTM C 932, *Standard Specification for Surface-Applied Bonding Compounds for Exterior Plastering.*

47.4.3 Installation.

47.4.3.1 Lath, Furring, and Accessories.

47.4.3.1.1 The installation of lath and furring used for the support of portland cement plaster shall comply with ASTM C 1063, *Standard Specification for Installation of Lathing and Furring to Receive Interior and Exterior Portland Cement-Based Plaster.*

47.4.3.1.2 Grounds, where installed, shall provide for a thickness of plaster not less than that required by ASTM C 926, *Standard Specification for Application of Portland Cement-Based Plaster.*

47.4.3.1.3 The requirements for foundation weep screed shall be as follows:

(1) Foundation weep screed shall be installed at the bottom of all steel-framed or wood-framed exterior walls to receive lath and plaster.
(2) The bottom edge of the foundation weep screed shall be placed not less than 1 in. (25 mm) below the joint formed by the foundation and framing.
(3) The nose of the screed shall be placed not less than 4 in. (100 mm) above the earth or 2 in. (51 mm) above paved surfaces.
(4) The weather-resistive barrier and lath shall entirely cover the vertical attachment flange of the screed and shall terminate at the top edge of the nose or ground flange.

47.4.3.1.4 Solid backing shall be installed to provide support for lath where lath installed on a vertical plane extends between rafters or other similar projecting members.

47.4.3.1.5 Gypsum board, where used as a backing for lath, shall meet the requirements of 47.4.3.1.5.1 and 47.4.3.1.5.2.

47.4.3.1.5.1 Gypsum sheathing shall be permitted to be used as a backing for metal or wire fabric lath where covered by a weather-resistive barrier.

47.4.3.1.5.2 Gypsum lath or gypsum wallboard shall be permitted to be used as a backing for self-furred metal or wire fabric lath on ceilings, soffits, or interior walls where covered by a weather-resistive barrier.

47.4.3.2 Portland Cement Plaster.

47.4.3.2.1 Installation of portland cement plaster shall comply with ASTM C 926 and the requirements of 47.4.3.2.2 through 47.4.3.2.10.

47.4.3.2.2 Plaster thickness shall be as defined in 47.4.3.2.2.1 and 47.4.3.2.2.2 and shall be measured from the face of the base or lath.

47.4.3.2.2.1 Metal plaster base and wire lath shall be covered by not less than three coats of plaster as specified in ASTM C 926.

47.4.3.2.2.2 Solid plaster bases or plaster surfaces completely covered by veneer or other facing material shall be covered by not less than two coats of plaster as specified in ASTM C 926.

47.4.3.2.3 Interior wood-frame walls covered with cement plaster and subject to water splash shall have framing members protected with an approved moisture barrier.

47.4.3.2.4 Plaster installed to stud construction where the stud construction rests on an on-grade concrete floor slab system shall be applied so as to cover, but not to extend below, the lath and weather barrier.

47.4.3.2.5 The second coat of plaster shall be applied to a true, even plane, floated and left rough to provide bond for the third or finish coat, and shall have no variation greater than ¼ in. (6.4 mm) in any direction for 10 ft (3050 mm).

47.4.3.2.6 Ceiling surfaces that require a thickness of plaster greater than that specified in ASTM C 926 shall have metal lath or wire fabric lath installed before plastering.

47.4.3.2.7 Curing time between plaster coats shall be as required in 47.4.3.2.7.1 or 47.4.3.2.7.2.

47.4.3.2.7.1 The curing time for exterior plaster application shall be as follows:

(1) A 48-hour interval between application of the first and second coat of plaster and a 7-day interval between application of the second and third or finish coat of plaster shall be allowed for plaster curing.
(2) The third or finish coat of plaster shall be allowed to cure for a period of not less than 7 days.

47.4.3.2.7.2 The curing time for interior plaster application shall be as follows:

(1) A 24-hour interval between application of the first and second coat of plaster and a 48-hour interval between application of the second and third or finish coat of plaster shall be allowed.
(2) The third or finish coat of plaster shall be allowed to cure for a period of not less than 7 days.

47.4.3.2.8 Moist curing of plaster shall meet the requirements of 47.4.3.2.8.1 through 47.4.3.2.8.3.

47.4.3.2.8.1 Plaster shall be moist-cured for not less than 48 hours between applications of successive coats of plaster.

47.4.3.2.8.2 Moist curing shall not be required where job and weather conditions are favorable to the retention of moisture in the plaster for the required time period.

47.4.3.2.8.3 Plaster applied directly to unit masonry or over gypsum backing shall be permitted to have its second coat applied as soon as the first coat has attained sufficient hardness.

47.4.3.2.9 An alternate method of plaster curing shall be permitted if the requirements of 47.4.3.2.9.1 and 47.4.3.2.9.2 are met.

Copyright National Fire Protection Association
Provided by IHS under license with NFPA
No reproduction or networking permitted without license from IHS
Not for Resale

47.4.3.2.9.1 To accelerate the application process, the second coat of plaster shall be permitted to be applied as soon as the first coat is rigid enough to resist cracking and the pressures of the second coat application.

47.4.3.2.9.2 Where the alternate method of application specified in 47.4.3.2.9.1 is used, curing of the first coat of plaster shall not be required, and the second coat shall be cured as described in 47.4.3.2.8.

47.4.3.2.10 Plasticity agents shall meet the requirements of 47.4.3.2.10.1 through 47.4.3.2.10.3.

47.4.3.2.10.1 Only approved plasticity agents, and approved amounts thereof, shall be added to portland cement.

47.4.3.2.10.2 Where plastic cement or masonry cement is used, no additional lime or plasticizer shall be added.

47.4.3.2.10.3 Hydrated lime used as a plasticizer shall be added to plaster as specified in ASTM C 926.

Chapter 48 Plastics

48.1 Scope. All plastic materials used in or on buildings or structures shall meet the requirements in this chapter.

48.2 Special Definitions. A list of special terms used in this chapter follows.

48.2.1 Foam Plastic Insulation. A cellular plastic, used for thermal insulating or acousical applications, having a density of 20 lb/ft^3 (320 kg/m^3) or less, containing open or closed cells, formed by a foaming agent.

48.2.2* Light-Diffusing System. Panels, grids, baffles, or lenses made with light-transmitting plastics, positioned below independently mounted electrical light sources, skylights, or light-transmitting roof panels.

48.2.3 Material.

48.2.3.1 Thermoplastic Material. Plastic material capable of being repeatedly softened by heating and hardened by cooling and that, in the softened state, can be repeatedly shaped by molding or forming.

48.2.3.2 Thermoset Material. Plastic material that, after having been cured by heat or other means, is substantially infusible and cannot be softened and formed.

48.2.4 Panel.

48.2.4.1* Light-Transmitting Plastic Roof Panel. A structural plastic panel in the plane of the roof, fastened to roof members, that transmits light into the structure.

48.2.4.2* Light-Transmitting Plastic Wall Panel. A plastic panel fastened to structural wall members that transmits light into the structure.

48.2.5 Plastic.

48.2.5.1 Glass Fiber Reinforced Plastic. Plastic material containing not less than 20 percent by weight glass fiber that imparts some mechanical properties superior to those of the base resin.

48.2.5.2 Light-Transmitting Plastic. Plastic material that is used to transmit light into structures.

48.2.6 Plastic Glazing. Plastic panels or lenses that are glazed or set in a frame or sash and are not mechanically fastened to a structural member of the structure.

48.3 General Criteria — Foam Plastic Insulation. Section 48.3 shall govern the requirements and application of foam plastic insulation in construction.

48.3.1 Product Identification.

48.3.1.1 A label of an approved agency shall appear on foam plastic insulation products, packages, or containers and on components delivered to a job site.

48.3.1.2 The label described in 48.3.1.1 shall indicate the manufacturer, product identification, product listing, and information to establish that the end use will conform to this *Code*.

48.3.2 Surface-Burning Characteristics.

48.3.2.1* Unless otherwise permitted by 48.3.2.3, foam plastic insulation or foam plastic cores of manufactured assemblies and components shall be tested in accordance with NFPA 255, *Standard Method of Test of Surface Burning Characteristics of Building Materials*, at the maximum thickness intended for use and shall have a flame spread index of 75 or less and a smoke developed index of 450 or less.

48.3.2.2 Foam plastic loose-fill insulation shall be tested as sheets or boardstock.

48.3.2.3 The requirements of 48.3.2.1 and 48.3.2.2 shall not apply where otherwise permitted by the following:

(1) As provided in Section 48.5, the smoke developed index for interior trim shall not be required.
(2) Foam plastic insulation in cold storage buildings, ice plants, food plants, food processing rooms, and similar areas where tested in a thickness of 4 in. (100 mm) shall be permitted in a thickness of up to 10 in. (255 mm) where that portion of the building and the room are equipped with an automatic fire sprinkler system in accordance with NFPA 13, *Standard for the Installation of Sprinkler Systems*.
(3) Foam plastic insulation that is part of a Class A, Class B, or Class C roof covering system shall not be required to meet the surface-burning requirements, provided that the system with the foam plastic insulation passes FM 4450, *Approval Standard for Class I Insulated Steel Deck Roofs*, or UL 1256, *Standard for Fire Test of Roof Deck Constructions*. For roof applications, the smoke developed index shall not be required.
(4) Foam plastic insulation at the thickness and density intended for use shall not be required where approved and where both of the following criteria are met:
    (a) The end-use configuration is tested in accordance with 48.4.4 or 48.4.1.5.
    (b) The requirements of 48.3.2.1 and 48.3.2.2 are met when tested at a minimum thickness of 4 in. (100 mm) and at the density intended for use.

48.3.3 Thermal Barrier.

48.3.3.1 Foam plastic insulation and components shall be separated from the interior of a building and from plenums by an approved thermal barrier of ½ in. (13 mm) gypsum wallboard or equivalent material that will limit the average temperature rise of the unexposed surface to not more than 250°F (121°C) after 15 minutes of fire exposure complying with the standard time–temperature curve of NFPA 251, *Standard Methods of Tests of Fire Resistance of Building Construction and Materials*.

Copyright National Fire Protection Association
Provided by IHS under license with NFPA
No reproduction or networking permitted without license from IHS
Not for Resale

48.3.3.2 The thermal barrier shall remain in place for 15 minutes, based on one of the following tests:

(1) UL 1715, *Standard for Fire Test of Interior Finish Material*
(2) FM 4880, *Approval Standard for Class 1 Insulated Wall or Wall and Roof/Ceiling Panels; Plastic Interior Finish Materials; Plastic Exterior Building Panels; Wall/Ceiling Coating Systems; Interior or Exterior Finish Systems*
(3) UL 1040, *Standard for Fire Test of Insulated Wall Construction*
(4) NFPA 286, *Standard Methods of Fire Tests for Evaluating Contribution of Wall and Ceiling Interior Finish to Room Fire Growth*, with the acceptance criteria of 10.3.6.2

48.3.3.3 Combustible concealed spaces shall comply with Section 8.14.

48.3.3.4 The requirements of 48.3.3.1 through 48.3.3.3 shall not apply where otherwise permitted by the following:

(1) The thermal barrier shall not be required in masonry or concrete wall, floor, or roof construction where the foam plastic insulation is covered on each face by concrete or masonry with a minimum 1 in. (25 mm) thickness.
(2) The thermal barrier shall not be required in cooler and freezer walls, provided that all of the following conditions are met:
    (a) The foam plastic used in cooler and freezer walls is a maximum thickness of 10 in. (255 mm) and, when tested, is a minimum thickness of 4 in. (100 mm) and has a flame spread index of 25 or less and a smoke developed index of 450 or less.
    (b) The flash and self-ignition temperatures of the foam plastic are not less than 600°F (316°C) and 800°F (427°C), respectively, when tested in accordance with ASTM D 1929, *Standard Test Method for Determining Ignition Temperature of Plastics*.
    (c) The foam plastic is covered by aluminum not less than 0.032 in. (0.8 mm) thick or corrosion-resistant steel having a base metal thickness not less than 0.016 in. (0.4 mm) at any point.
    (d) The cooler or freezer walls are protected by an automatic sprinkler system in accordance with NFPA 13.
    (e) The cooler or freezer is within a building, and the cooler or freezer and the part of the building in which it is located are protected by an automatic sprinkler system in accordance with NFPA 13.
(3) The thermal barrier shall not be required in walk-in coolers in unsprinklered buildings, provided that all of the following conditions are met:
    (a) The foam plastic insulation is used in thicknesses of 4 in. (100 mm) or less.
    (b) The foam plastic insulation has a flame spread of 75 or less.
    (c) The aggregate floor area of the walk-in coolers is 400 ft^2 (37 m^2) or less.
    (d) The foam plastic insulation is covered either by aluminum not less than 0.032 in. (0.8 mm) thick or corrosion-resistant steel having a minimum base metal thickness of 0.016 in. (0.4 mm).
(4) The thermal barrier shall not be required on or in exterior walls of one-story buildings where all of the following criteria are met:
    (a) The foam plastic insulation meets all of the following requirements:
        i. It is 4 in. (100 mm) or less in thickness.
        ii. It has a flame spread index of 25 or less.
        iii. It has a smoke developed index of 450 or less.
        iv. It is covered either by aluminum with a thickness equal to or greater than 0.032 in. (0.8 mm) or corrosion-resistant steel having a base metal thickness greater than 0.016 in. (0.4 mm).
    (b) The building is equipped throughout with an automatic sprinkler system in accordance with NFPA 13.
(5) The thermal barrier shall not be required in roof assemblies where the following criteria are met:
    (a) The foam plastic insulation installed in a roof assembly in accordance with this *Code* and the manufacturer's installation instructions is separated from the interior of the building by wood structural sheathing not less than 0.47 in. (12 mm) in thickness bonded with exterior glue, with edges supported by one of the following:
        i. Blocking
        ii. Tongue-and-groove joints
        iii. Other approved type of edge support
        iv. Other equivalent material
    (b) The foam plastic insulation is a part of a Class A, Class B, or Class C roof-covering assembly, provided that the assembly with the foam plastic insulation satisfactorily passes either of the following:
        i. FM 4450, *Approval Standard for Class I Insulated Steel Deck Roofs*
        ii. UL 1256, *Standard for Fire Test of Roof Deck Constructions*
(6) The thermal barrier shall not be required in attics and crawl spaces if the foam plastics are installed within an attic or crawl space where entry is made only for service of utilities, and the foam plastic is protected against ignition by one of the following:
    (a) Mineral fiber insulation of 1½ in. (38 mm) thickness
    (b) Wood structural panel, particleboard, or hardboard of ¼ in. (6.4 mm) thickness
    (c) Gypsum wallboard of 0.375 in. (9.5 mm) thickness
    (d) Corrosion-resistant steel having a base metal thickness of 0.016 in. (0.4 mm)
    (e) Other approved material consistent with the requirements of the application and installed so that the foam plastic insulation is not exposed
(7) The thermal barrier shall not be required in doors where the following criteria are met:
    (a) Where the foam plastic insulation meeting the requirements of 48.3.2 is used as a core of pivoted or side-hinged doors that comply with the following:
        i. The doors do not require a fire protection rating.
        ii. The door skin is steel having a thickness of at least 0.016 in. (0.4 mm) or aluminum having a thickness of at least 0.032 in. (0.8 mm) at any point.
    (b) Where foam-filled exterior entrance doors of residential occupancies comply with the following:
        i. The doors do not require a fire resistance rating.
        ii. The doors are faced with wood or other approved materials.

Copyright National Fire Protection Association
Provided by IHS under license with NFPA
No reproduction or networking permitted without license from IHS
Not for Resale

(c) Where the foam plastic insulation is used as core material for garage doors, and the following criteria are met:
   i. No fire resistance rating is required for the assembly.
   ii. The door is faced with at least 0.032 in. (0.8 mm) aluminum, 0.010 in. (0.25 mm) steel, or a 0.125 in. (3.1 mm) thickness of wood.

(d) Where garage doors have facings other than those specified in 48.3.3.4(7)(c)(ii) and are tested in accordance with, and meet the acceptance criteria of, ANSI/DASMA 107, *Room Fire Test Standard for Garage Doors Using Foam Plastic Insulation.*

(e) Where the foam plastic insulation is used as core material for garage doors in one- and two-family dwellings, and the foam plastic insulation complies with 48.3.2.

(8) The thermal barrier shall not be required in conjunction with siding backer board where the following criteria are met:
   (a) The foam plastic insulation ½ in. (13 mm) or less in thickness and having a potential heat of not more than 2000 Btu/ft^2 (22.7 MJ/m^2) when tested in accordance with NFPA 259, *Standard Test Method for Potential Heat of Building Materials*, is separated from the interior of the building by a least 2 in. (51 mm) of mineral fiber insulation or equivalent.
   (b) The siding and foam plastic insulation are applied over existing siding.

(9) The thermal barrier shall not be required on interior trim where the foam plastic meets the requirements of Section 48.5.

(10) The thermal barrier shall not be required on interior plastic signs in covered mall buildings where used in accordance with Section 48.8.

(11) In Type V construction, foam plastic insulation shall be permitted to be spray-applied to sill plates and headers without requiring a thermal barrier where the foam plastic insulation complies with all of the following criteria:
   (a) The maximum thickness of the foam plastic insulation is 3¼ in. (82.6 mm).
   (b) The density of the foam plastic insulation ranges between 1.5 pcf to 2.0 pcf (24 kg/m^3 to 32 kg/m^3).
   (c) The foam plastic insulation has a flame spread index of 25 or less.

(12) The thermal barrier shall not be required where tested in accordance with 48.4.4.

48.3.3.5 Walk-in coolers with foam plastic insulation of a thickness greater than 4 in. (100 mm) and up to and including 10 in. (255 mm) in unsprinklered buildings shall be permitted where all of the following conditions are met:

(1) The flame spread is equal to or less than 75.
(2) The aggregate floor area of the walk-in coolers is 400 ft^2 (37 m^2) or less.
(3) A thermal barrier is provided.

48.4 Specific Application Requirements — Foam Plastic Insulation.

48.4.1 Exterior Walls.

48.4.1.1 General.

48.4.1.1.1 Exterior walls of buildings shall meet the requirements of Chapter 37.

48.4.1.1.2 Exterior walls of Type I, Type II, Type III, and Type IV buildings of any height containing foam plastics shall conform to the requirements of 48.4.1.2 through 48.4.1.8.

48.4.1.1.3 Exterior walls of cold storage buildings constructed of noncombustible or limited-combustible materials or of more than one story in height, or both, shall conform to requirements of 48.4.1.2 through 48.4.1.8.

48.4.1.1.4 Exterior walls of Type V buildings shall conform to Section 48.3.

48.4.1.2* Fire-Rated Walls. Walls requiring a fire resistance rating shall comply with the following:

(1) Testing shall be conducted in accordance with NFPA 251.
(2) Data shall be provided to validate that the fire resistance rating is maintained.

48.4.1.3 Thermal Barriers. Foam plastic insulation shall be separated from the building interiors by a thermal barrier(s) conforming to the requirements of 48.3.3, unless otherwise permitted by one of the following:

(1) Approval based on special tests conducted in accordance with 48.4.4
(2) One-story buildings complying with 48.3.3.4(4)

48.4.1.4 Flame Spread and Smoke Developed Index. Foam plastic insulation, exterior facings, and coatings shall be tested separately in the thickness of intended use per NFPA 255.

48.4.1.4.1 Each component shall have a flame spread index of 25 or less and a smoke developed index of 450 or less.

48.4.1.4.2 Factory-manufactured or prefabricated panels having a total thickness equal to or less than ¼ in. (6.4 mm) and an aluminum facing of a minimum of 0.020 in. (0.5 mm) shall be permitted to be tested as an assembly in cases where the foam plastic core is not exposed during on-site construction.

48.4.1.5 Wall Assembly Flammability.

48.4.1.5.1 The wall assembly shall be tested in accordance with, and the results shall comply with, the acceptance criteria of NFPA 285, *Standard Fire Test Method for Evaluation of Fire Propagation Characteristics of Exterior Non-Load-Bearing Wall Assemblies Containing Combustible Components.*

48.4.1.5.2 The requirement of 48.4.1.5.1 shall not apply to one-story buildings complying with 48.3.3.4(4).

48.4.1.6 Potential Heat Content.

48.4.1.6.1 The potential heat of foam plastic insulation in any portion of the wall or panel shall not exceed the value of the potential heat of the foam plastic insulation in the wall assembly (expressed in MJ/m^2) that is tested in accordance with 48.4.1.5.

48.4.1.6.2 The potential heat of the foam plastic shall be determined in accordance with NFPA 259.

48.4.1.6.3 The requirements of 48.4.1.6.1 and 48.4.1.6.2 shall not apply to one-story buildings complying with 48.3.3.4(4).

48.4.1.7 Labeling.

48.4.1.7.1 Each piece of foam plastic insulation shall be labeled on the edge or face with labels from an approved agency.

Copyright National Fire Protection Association
Provided by IHS under license with NFPA
No reproduction or networking permitted without license from IHS
Not for Resale

48.4.1.7.2 The label on foam plastic insulation shall identify the following:

(1) Approved agency
(2) Manufacturer's product identification information
(3) Other performance characteristics that indicate that the product's use conforms with this *Code*

48.4.1.8 Ignition Characteristics.

48.4.1.8.1 Exterior walls shall not produce sustained flaming when tested in accordance with NFPA 268, *Standard Test Method for Determining Ignitability of Exterior Wall Assemblies Using a Radiant Heat Energy Source*.

48.4.1.8.2 Testing of minimum and maximum thickness shall be required where more than one thickness is installed.

48.4.1.8.3 The requirements of 48.4.1.8.1 and 48.4.1.8.2 shall not apply to assemblies protected on the outside with facings of one or more of the following items:

(1) Thermal barrier meeting requirements of 48.3.3
(2) Glass fiber reinforced concrete panels with a minimum thickness of 0.375 in. (9.5 mm)
(3) Portland cement plaster with minimum thickness of 0.875 in. (22 mm) meeting the requirements of Section 47.4
(4) Metal-faced panels with a minimum thickness of 0.019 in. (0.48 mm) aluminum or 0.016 in. (0.4 mm) corrosion-resistant steel
(5) Concrete or masonry with a minimum thickness of 1 in. (25 mm)

48.4.2 Roofing. Foam plastic insulation meeting the requirements of 48.3.1 through 48.3.3 shall be approved as part of a roof-covering assembly where the assembly is tested as an assembly in accordance with NFPA 256, *Standard Methods of Fire Tests of Roof Coverings*, and has been determined to meet the requirements of Class A, Class B, or Class C.

48.4.3 Plenums. The use of foam plastic insulation as wall or ceiling finish in plenums shall be permitted where the insulation meets one of the following criteria:

(1) The foam plastic insulation complies with 48.3.2.1 and is separated from the plenum by a thermal barrier complying with 48.3.3.
(2) The foam plastic insulation has a flame spread index of 25 or less and a smoke developed index of 50 or less when tested in accordance with NFPA 255 and meets one of the following criteria:
    (a) The foam plastic is separated from the plenum by a thermal barrier complying with 48.3.3.
    (b) The foam plastic is approved based on tests conducted in accordance with 48.4.4.
(3) The foam plastic insulation complies with 48.3.2.1 and is covered by corrosion-resistant steel having a base metal thickness of not less than 0.016 in. (0.4 mm) and meets one of the following:
    (a) The foam plastic is separated from the plenum by a thermal barrier complying with 48.3.3.
    (b) The foam plastic is approved based on tests conducted in accordance with 48.4.4.

48.4.4 Alternate Testing and Approval.

48.4.4.1 The requirements of 48.3.3 through 48.4.3 shall be permitted to be replaced by special testing, and the approval of foam plastic shall be based on large-scale tests such as, but not limited to, the following:

(1) UL 1715, *Standard for Fire Test of Interior Finish Material*
(2) UL 1040, *Standard for Fire Test of Insulated Wall Construction*
(3) FM 4880, *Approval Standard for Class 1 Insulated Wall or Wall and Roof/Ceiling Panels; Plastic Interior Finish Materials; Plastic Exterior Building Panels; Wall/Ceiling Coating Systems; Interior or Exterior Finish Systems*
(4) NFPA 286, *Standard Methods of Fire Tests for Evaluating Contribution of Wall and Ceiling Interior Finish to Room Fire Growth*, with the acceptance criteria of 10.3.6.2

48.4.4.2 The testing shall be performed on the finished foam plastic assembly related to the actual end-use configuration and on the maximum thickness intended for use.

48.4.4.3 Foam plastics used as interior finish shall also conform to the flame spread requirements of Chapter 10.

48.4.4.4 Assemblies, as tested, shall be constructed such that construction details (for example, joints, and seams) are reflective of the final assembly.

48.5 Specific Requirements — Interior Finish and Trim.

48.5.1 All plastic materials installed as interior finish or trim shall comply with requirements of Chapter 10.

48.5.2 Foam plastics shall only be installed as interior finish where approved by the alternate requirements of 48.4.4.

48.5.3 Foam plastics used as interior trim shall meet all of the following requirements:

(1) They shall have a minimum density of 20 lb/ft^3 (320 kg/m^3).
(2) They shall have a maximum thickness of ½ in. (13 mm) and a maximum width of 8 in. (205 mm).
(3) They shall constitute no more than 10 percent of the total wall and ceiling area of any room or space.
(4) They shall have a flame spread index of 75 or less when tested in accordance with NFPA 255.

48.6 Specific Requirements — Plastic Veneers.

48.6.1 Plastic veneer used as an interior finish material shall comply with Chapter 10.

48.6.2 Plastic veneer meeting the requirements of 48.7.2 shall be permitted on the exterior of all buildings of any type occupancy, provided that all of the following criteria are met:

(1) The height of the plastic veneer does not exceed 50 ft (15 m) above grade.
(2) The total surface area of any section does not exceed 300 ft^2 (28 m^2).
(3) A minimum 48 in. (1220 mm) vertical separation exists between sections.

48.6.3 Plastic veneer on the exterior of Type V (000) construction that is not required to have fire-rated exterior walls shall be permitted, and the plastic veneer shall not be required to meet 48.6.2(1) through (3). In this application, the plastic veneers shall not be required to meet the smoke developed requirements of 48.7.2(2).

48.7 Specific Requirements — Light-Transmitting Plastics.

48.7.1 General.

48.7.1.1 The requirements of Section 48.7 shall govern the use of light-transmitting plastics.

Copyright National Fire Protection Association
Provided by IHS under license with NFPA
No reproduction or networking permitted without license from IHS
Not for Resale

48.7.1.2 Plastics used in buildings or structures for interior finish and trim shall also meet the requirements of Chapter 10.

48.7.1.3 Light-transmitting plastics shall be permitted to be used in walls and roofs where other applicable code requirements are met.

48.7.2 Flammability Specifications. Plastics used for exterior veneer and light-transmitting applications shall meet all of the following criteria:

(1) They shall have a self-ignition temperature of 650°F (343°C) or greater when tested in accordance with ASTM D 1929.
(2) They shall have a smoke developed index not greater than 450 when tested in the manner intended for use in accordance with NFPA 255, or not greater than 75 when tested in the thickness intended for use in accordance with ASTM D 2843, *Standard Test for Density of Smoke from the Burning or Decomposition of Plastics.*
(3) They shall meet the criteria of one of the following classifications:
   (a) CC1 — Plastic materials that have a burn length of 1 in. (25 mm) or less and flame extinguishment when tested at a nominal thickness of 0.060 in. (1.5 mm), or in the thickness intended for use, in accordance with ASTM D 635, *Standard Test Method for Rate of Burning and/or Extent and Time of Burning of Plastics in a Horizontal Position*
   (b) CC2 — Plastic materials that have a burning rate of 2½ in./min (64 mm/min) or less when tested at a nominal thickness of 0.060 in. (1.5 mm), or at a thickness intended for use, in accordance with ASTM D 635

48.7.3 Light-Transmitting Plastic Skylight Glazing. Light-transmitting plastics used for skylights shall meet the requirements of 48.7.3.1 through 48.7.3.9.

48.7.3.1 The requirements for light-transmitting plastics used as skylight glazing shall be as follows:

(1) Light-transmitting plastics used as glazing in skylights shall meet the requirements of 48.7.2.
(2) The requirement of 48.7.3.1(1) shall not apply when the light-transmitting plastic meets the requirements for roof-covering class in accordance with Chapter 38.

48.7.3.2 Skylights shall be permitted in roof construction, except where openings through the roof are required to be protected.

48.7.3.3 Where exterior wall openings are required to be protected, a skylight shall not be installed within 6 ft (1830 mm) of such exterior wall.

48.7.3.4 Skylights shall be mounted as follows:

(1) The light-transmitting plastic shall be mounted above the plane of the roof on a curb constructed in accordance with the requirements for the type of construction classification and at least 4 in. (100 mm) above the plane of the roof.
(2) The edges of the light-transmitting plastic skylights shall be protected by metal or other approved noncombustible material.

48.7.3.4.1 The requirement of 48.7.3.4(1) shall not apply where skylights are used on roofs having a minimum slope of 3 units vertical in 12 units horizontal (3:12) in one- or two-family dwellings or where the roof covering is unclassified.

48.7.3.4.2 The requirement of 48.7.3.4(2) shall not apply where unclassified roof coverings are permitted or where the light-transmitting plastic skylight has been shown to resist ignition where exposed at the edge to a flame from a Class B brand, as described in NFPA 256.

48.7.3.5 Unless the skylight meets the Class B burning brand test, as described in NFPA 256, skylights shall have the following slopes:

(1) Flat or corrugated light-transmitting plastic skylights shall slope at least 4 units vertical in 12 units horizontal (4:12).
(2) Dome-shaped skylights shall rise above the mounting flange for a minimum distance equal to 10 percent of the maximum span of the dome, but not less than 3 in. (75 mm).

48.7.3.6 Unless the building is equipped throughout with an automatic sprinkler system in accordance with NFPA 13, or when the building is equipped with smoke and heat vents, each skylight shall have a maximum area within the curb of 100 ft^2 (9 m^2).

48.7.3.7 The aggregate area of skylights shall meet the requirements of 48.7.3.7.1 and 48.7.3.7.2.

48.7.3.7.1 The aggregate area of skylights shall be as follows:

(1) Where CC1 plastics are used, the aggregate area of skylights shall not exceed 33⅓ percent of the floor area of the room or space sheltered by the roof in which the skylights are installed.
(2) Where CC2 plastics are used, the aggregate area of skylights shall not exceed 25 percent of the floor area of the room or space sheltered by the roof in which the skylights are installed.

48.7.3.7.2 The aggregate area limitations of 48.7.3.7.1 shall be permitted to be increased 100 percent where the building is equipped throughout with an automatic sprinkler system in accordance with NFPA 13, or where the building is equipped with smoke and heat vents.

48.7.3.8 Skylights shall meet the requirements of 48.7.3.8.1 and 48.7.3.8.2.

48.7.3.8.1 Skylights shall be separated from each other by a distance of not less than 48 in. (1220 mm), as measured in a horizontal plane.

48.7.3.8.2 The requirement of 48.7.3.8.1 shall not apply where one of the following conditions is met:

(1) The building shall be equipped throughout with an automatic sprinkler system in accordance with NFPA 13.
(2) The skylight shall serve as an approved fire-venting system.
(3) In one- and two-family dwellings, or on buildings with an unclassified roof covering, skylights shall be separated from each other by a distance of not less than 16 in. (405 mm), measured in a horizontal plane, and each skylight shall not exceed a maximum area within the curb of 100 ft^2 (9 m^2).

48.7.3.9 Combinations of light-transmitting plastic roof panels and skylights shall be subject to the area and percentage limitations and separation requirements applicable to plastic light-transmitting roof panel installations.

--`,,```,,,,````-`-`,,`,,`,`,,`---
Copyright National Fire Protection Association
Provided by IHS under license with NFPA
No reproduction or networking permitted without license from IHS
Not for Resale

48.7.4 Plastic Light Diffusers in Ceilings. Light-transmitting plastics used for light diffusers in ceilings shall meet the requirements of 48.7.2 and 48.7.4.

48.7.4.1* Plastic light diffusers shall be permitted in other than exit passageways and exit stairways in nonsprinklered buildings.

48.7.4.2 Where walls and ceilings are required to be fire resistive or of noncombustible or limited-combustible construction, and walls are set out or ceilings are dropped more than 1¾ in. (44 mm), plastic materials with a flame spread index of 25 or less and a smoke developed index of 450 or less shall be used, unless they meet the following criteria:

(1) The plastic materials shall be protected on both sides by an automatic sprinkler system in accordance with NFPA 13.
(2) Plastic ceiling light diffusers shall meet the requirements of 48.7.2 and all of the following:
   (a) Plastic ceiling light diffusers shall be supported directly or indirectly from the ceiling or roof construction by use of noncombustible hangers.
   (b) Hangers shall be at least No. 12 gauge steel wire [0.106 in. (2.7 mm)], galvanized wire, or the equivalent.
   (c) Plastic ceiling light diffusers, as installed, shall fall from their mountings at an ambient temperature not higher than 200°F (111°C) below the ignition temperature of the plastic material.
   (d) Plastic light diffusers shall be mounted in the ceiling so that they remain in place at an ambient temperature of 175°F (79°C) for a period of not less than 15 minutes.
   (e) Light-diffusing ceilings installed below sprinkler heads shall be installed so that they do not interfere with the effective operation of the automatic sprinkler system and shall provide access to all valves and sprinkler heads of the system.
   (f) The maximum size of any single plastic light-transmitting panel shall not exceed 10 ft (3050 mm) or an area of 30 ft^2 (2.8 m^2).

48.7.5 Plastic Light Diffusers in Electrical Fixtures. Light-transmitting plastics used for plastic light diffusers in electrical fixtures shall meet the requirements of 48.7.5.1 through 48.7.5.2.

48.7.5.1* Plastic light diffusers in electrical fixtures shall be permitted to be used in all buildings and shall meet the following requirements:

(1) They shall comply with 48.7.2.
(2) The light diffusers, as installed, shall fall from their mountings at an ambient temperature of at least 200°F (111°C) below the ignition temperature of the plastic material.
(3) The plastic light diffusers shall be mounted so that they remain in place at an ambient temperature of 175°F (79°C) for a period of not less than 15 minutes.

48.7.5.2 Unless an automatic sprinkler system is installed in accordance with NFPA 13, the area of light diffusers, where used in exitways, exit passages, or corridors, shall not exceed 30 percent of the aggregate area of the ceiling in which they are installed.

48.7.6 Light-Transmitting Exterior Plastic Wall Panels. Light-transmitting plastics used for light-transmitting exterior plastic wall panels shall meet the requirements of 48.7.6.1 through 48.7.6.7.

48.7.6.1 Except where prohibited, light-transmitting plastics shall be permitted to be used as wall panels in exterior walls, provided that the walls are not required to have a fire resistance rating and the installation conforms to the requirements of 48.7.6.

48.7.6.2 Light-transmitting exterior plastic wall panels shall be erected and anchored on a foundation, waterproofed or otherwise protected from moisture absorption, and sealed with a coat of mastic or other approved waterproof coating.

48.7.6.3 The use of light-transmitting exterior plastic wall panels shall not alter the type of construction classification of the building.

48.7.6.4 Light-transmitting exterior plastic wall panels shall not be installed more than 75 ft (23 m) above grade plane, except as permitted by 48.7.6.6.

48.7.6.5 The maximum area requirements for light-transmitting exterior wall panels shall be as specified in 48.7.6.5.1 through 48.7.6.5.3.

48.7.6.5.1 The maximum area of a single wall panel and the minimum vertical and horizontal separation requirements for light-transmitting exterior wall panels shall be as provided for in Table 48.7.6.5.1.

48.7.6.5.2 The maximum percentage of wall area of any story in light-transmitting exterior plastic wall panels shall not exceed that indicated in Table 48.7.6.5.1 or the percentage of unprotected openings permitted by Section 7.3, whichever is smaller.

48.7.6.5.3 The requirements of 48.7.6.5.1 and 48.7.6.5.2 shall not apply where otherwise permitted by any of the following:

(1) In structures provided with approved flame barriers extending 30 in. (760 mm) beyond the exterior wall in the plane of the floor, a vertical separation shall not be required at the floor, except that provided by the vertical thickness of the flame barrier projection.
(2) The requirements of 48.7.6.5.1 and 48.7.6.5.2 shall not apply to veneers of approved, weather-resistant light-transmitting plastics used as exterior siding in buildings of Type V construction.
(3) The area of light-transmitting plastic wall panels in exterior walls of greenhouses shall be exempt from the area limitations of Table 48.7.6.5.1 but shall be limited as required for unprotected openings in accordance with Section 7.3.
(4) Light-transmitting plastic wall panels that meet the requirements of FM 4411, *Insulated Wall Constructions*, shall not be limited to the area and separation requirements of Table 48.7.6.5.1.

48.7.6.6 Where the building is equipped throughout with an automatic sprinkler system in accordance with NFPA 13, the maximum percentage area of an exterior wall in any story in light-transmitting plastic wall panels, and the maximum square footage of a single area given in Table 48.7.6.5.1, shall be permitted to be increased by 100 percent, provided that the area of light-transmitting plastic wall panels does not exceed 50 percent of the wall area in any story, or the area permitted for unprotected openings, whichever is smaller. These limitations shall be exempt from height limitations.

Copyright National Fire Protection Association
Provided by IHS under license with NFPA
No reproduction or networking permitted without license from IHS
Not for Resale

Table 48.7.6.5.1 Area Limitation and Separation Requirements for Exterior Light-Transmitting Plastic Wall Panels

Fire Separation Distance (ft)	Class of Plastic	Maximum Percentage Area of Exterior Wall in Plastic Wall Panels	Maximum Single Area of Plastic Wall Panels (ft^2)	Minimum Separation of Plastic Wall Panels (ft)	
				Vertical	Horizontal
<6	—	NP	NP	—	—
≥6 <11	CC1	10	50	8	4
	CC2	NP	NP	—	—
≥11 ≤ 30	CC1	25	90	6	4
	CC2	15	70	8	4
>30	CC1	50	NL	3	0
	CC2	50	100	6	3

For SI units, 1 ft = 0.305 m; 1 ft^2 = 0.093 m^2.
NP: Not permitted. NL: Not limited.
Note: For combinations of plastic glazing and plastic wall panel areas permitted, see 48.7.6.7.

48.7.6.7 Combinations of light-transmitting plastic glazing and light-transmitting plastic wall panels shall be subject to the area, height, and percentage limitations and the separation requirements applicable to the class of light-transmitting plastic, as prescribed for light-transmitting plastic wall panel installations.

48.7.7 Light-Transmitting Plastic Glazing. Light-transmitting plastic materials used for light-transmitting plastic glazing shall meet the requirements of 48.7.2, 48.7.7.1, and 48.7.7.2.

48.7.7.1 Light-transmitting plastic glazing shall be permitted in openings in exterior walls of buildings of Type V (000) construction where not required to be protected.

48.7.7.2 Light-transmitting plastic glazing shall be permitted in openings in the exterior walls of buildings of types of construction other than Type V (000), where not required to be protected, in accordance with the following provisions:

(1) The aggregate area of light-transmitting plastic glazing shall not exceed 25 percent of the area of any wall face of the story in which it is installed.
(2) The area of a single pane of glazing installed above the first story shall not exceed 16 ft^2 (1.5 m^2), and the vertical dimension of a single pane shall not exceed 48 in. (1220 mm).
(3) Where an automatic sprinkler is provided throughout in accordance with NFPA 13, the aggregate area of glazing permitted by 48.7.7.2(1) shall be permitted to be increased to a maximum of 50 percent of the wall face of the story in which it is installed, with no limit on the maximum dimension or area of a single pane of glazing.
(4) Approved flame barriers extending 30 in. (760 mm) beyond the exterior wall in the plane of the floor, or vertical panels not less than 48 in. (1220 mm) in height, shall be installed between glazed units located in adjacent stories.
(5) Light-transmitting plastics shall not be installed more than 75 ft (23 m) above grade level.
(6) The requirements of 48.7.7.2 (4) and (5) shall not apply to buildings equipped throughout with an automatic sprinkler in accordance with NFPA 13.

48.7.8 Light-Transmitting Plastic Roof Panels. Light-transmitting plastics used for light-transmitting roof panels shall meet the requirements of 48.7.8.1 through 48.7.8.4.

48.7.8.1 Except where prohibited, light-transmitting plastics shall be permitted to be used as light-transmitting plastic roof panels where any of the following conditions are met:

(1) The building is equipped throughout with an automatic sprinkler in accordance with NFPA 13.
(2) The roof construction is not required to have a fire resistance rating.
(3) The light-transmitting plastic roof panels meet the requirements for roof coverings in accordance with Chapter 38.

48.7.8.2 Individual light-transmitting plastic roof panels shall meet the requirements of 48.7.8.2.1 and 48.7.8.2.2.

48.7.8.2.1 Individual light-transmitting plastic roof panels 48 in. (1220 mm), measured in a horizontal plane.

48.7.8.2.2 The requirement of 48.7.8.2.1 shall not apply where one of the following conditions exists:

(1) The separation between light-transmitting plastic roof panels shall not be required in a building equipped throughout with an automatic sprinkler system in accordance with NFPA 13.
(2) The separation between light-transmitting plastic roof panels shall not be required in buildings complying with the conditions of 48.7.8.4.2(2) and (3).

48.7.8.3 Where exterior wall openings are required to be protected, a light-transmitting plastic roof panel shall not be installed within 6 ft (1830 mm) of such exterior wall.

48.7.8.4 Light-transmitting plastic roof panels shall meet the requirements of 48.7.8.4.1 and 48.7.8.4.2.

48.7.8.4.1 Light-transmitting plastic roof panels shall be limited in area, and the aggregate area of panels shall be limited by a percentage of the floor area of the room or space sheltered in accordance with Table 48.7.8.4.1.

48.7.8.4.2 The requirement of 48.7.8.4.1 shall not apply where one of the following conditions exists:

(1) The area limitations of Table 48.7.8.4.1 shall be permitted to be increased by 100 percent in buildings equipped throughout with an automatic sprinkler system in accordance with NFPA 13.

Copyright National Fire Protection Association
Provided by IHS under license with NFPA
No reproduction or networking permitted without license from IHS
Not for Resale

Table 48.7.8.4.1 Area Limitations for Light-Transmitting Plastic Roof Panels

Class of Plastic	Maximum Area of Individual Roof Panels		Maximum Aggregate Area of Roof Panels (% floor area)
	ft^2	m^2	
CC1	300	27.9	30
CC2	100	9.3	25

(2) Low hazard occupancy buildings, such as swimming pool shelters, shall be exempt from the area limitations of Table 48.7.8.4.1, provided that the building does not exceed 5000 ft^2 (465 m^2) and has a minimum fire separation distance of 10 ft (3050 mm).
(3) Greenhouses that are occupied for growing plants on a production or research basis, without public access, shall be exempt from the area limitations of Table 48.7.8.4.1, provided that they have a minimum fire separation distance of 48 in. (1220 mm).
(4) Roof coverings over terraces and patios in residential occupancies shall be exempt from the area limitations of Table 48.7.8.4.1.

48.7.9 Light-Transmitting Plastics Used in Awnings and Canopies. The requirements for light-transmitting plastics used as or in, awnings and canopies shall be as follows:

(1) Awnings and canopies, and similar structures constructed of light-transmitting plastics, shall be constructed in accordance with the provisions specified in Chapter 13 and Section 32.4 for projections and appendages.
(2) Light-transmitting plastics used in canopies for motor vehicle fuel stations shall comply with the appropriate sections of this *Code*.

48.7.10 Light-Transmitting Plastic Covers on Solar Collectors. Light-transmitting plastic covers on solar collectors having noncombustible sides and bottoms shall be permitted on buildings not over three stories in height or 9000 ft^2 (836 m^2) in total floor area, provided that one of the following criteria is met:

(1) The light-transmitting plastic cover shall not exceed 33⅓ percent of the roof area for CC1 materials.
(2) The light-transmitting plastic cover shall not exceed 25 percent of the roof area for CC2 materials.
(3) Plastic covers having a thickness of 0.010 in. (0.25 mm) or less shall be permitted to be of any plastic material, provided that the area of the collectors does not exceed 33⅓ percent of the roof area.

48.7.11 Light-Transmitting Plastics Used for Partitions. Light-transmitting plastics used in or as partitions shall comply with the requirements of Chapter 10.

48.7.12 Light-Transmitting Plastics Used in Bathroom Accessories. Requirements for glazing in light-transmitting plastics used in bathroom accessories shall be as follows:

(1) Light-transmitting plastics shall be permitted as glazing in shower stalls, shower doors, bathtub enclosures, and similar accessory units.
(2) Safety glazing shall be provided in accordance with ANSI Z 97.1, *Glazing Materials Used in Buildings, Safety Performance Specifications and Methods of Test.*

48.8 Specific Requirements — Plastic Interior Signs.

48.8.1 Signs installed on the faces of interior walls shall comply with Section 48.8.

48.8.2 Light-transmitting plastic interior wall signs shall comply with the following requirements:

(1) The sign shall have an area not greater than 20 percent of the wall area to which it is attached.
(2) The sign shall have an area not greater than 24 ft^2 (2.23 m^2).
(3) The edges and backs of the sign shall be fully encased in metal.

48.8.3 Plastic interior wall signs in mall buildings shall comply with 27.4.4.11.

48.8.4 Foam plastics shall be permitted to be used as signs in covered mall buildings in accordance with 27.4.4.11.

48.9 Specific Requirements — Light-Transmitting Plastics Used in Greenhouses. Light-transmitting plastics shall be permitted in lieu of glass in greenhouses.

Chapter 49 Interior Environment

49.1 General.

49.2 Ventilation.

49.2.1 Required Ventilation.

49.2.1.1 All rooms and occupied spaces in buildings shall be ventilated by natural or mechanical means in accordance with the provisions of this chapter.

49.2.1.2 Mechanical ventilation systems shall be designed, constructed, and installed in accordance with Chapter 50.

49.2.1.3 Mechanical ventilation systems shall operate to the extent that all occupied rooms are continuously provided with the required ventilation rate while occupied.

49.2.2 Ventilation Rates.

49.2.2.1 Ventilation rates for the following occupancies shall conform to ASHRAE 62, *Ventilation for Acceptable Indoor Air Quality*:

(1) Assembly
(2) Business
(3) Educational
(4) Day care
(5) Detention
(6) Health care
(7) Mercantile

49.2.2.1.1 Industrial occupancies shall be provided with general ventilation systems for replacing mildly contaminated air by means of natural air currents and openings, or they shall be provided with mechanical fans, ducts, and outlets.

49.2.2.1.2 Contaminated air shall be cleaned and recirculated.

49.2.2.1.3 Local exhaust systems shall be provided to collect and remove moisture and odors, fumes, smoke, gas, mist, heat, dust, or other materials that are in sufficient quantities to irritate or injure occupants.

Copyright National Fire Protection Association
Provided by IHS under license with NFPA
No reproduction or networking permitted without license from IHS
Not for Resale

49.2.2.1.4 Hazardous emissions, such as toxic, corrosive, acidic, and hot materials, that result from industrial processes shall be captured and exhausted to the outdoors.

49.2.2.1.5 Hazardous emissions shall be retained in the area where they originate by methods such as maintaining negative pressure to adjacent spaces and sealing the area of origin from adjacent areas until they are exhausted to the outdoors.

49.2.2.1.6 Air containing hazardous emissions shall be cleaned before it is exhausted outdoors.

49.2.2.2 Reserved.

49.2.2.3 Storage occupancies shall be provided with ventilation to provide not less than two air changes per hour.

49.2.2.4 Open parking structures complying with 30.8.1.3 shall not require mechanical ventilation.

49.2.2.5 An enclosed parking structure shall have a ventilation system designed to limit the concentration of carbon monoxide to not more than 35 parts per million of air when measured between 36 in. and 48 in. (915 mm and 1220 mm) from the floor.

49.2.2.6 Private parking structures shall be permitted to have a mechanically operated exhaust system that provides four changes of air per hour, with the air taken from within 16 in. (405 mm) of the finished floor. The mechanically operated system shall be operated by a single pole switch or a timer switch.

49.2.2.7 Ventilation rates for one- and two-family dwellings and multifamily dwelling units, hotel guest rooms, and residential board and care occupancies shall provide not less than the air change rates indicated in Table 49.2.2.7 where mechanical ventilation systems are installed. Where mechanical ventilation systems are not provided, the exterior openable window area shall be at least 4 percent of the floor area.

Table 49.2.2.7 Ventilation Rates

Occupancy	Intermittent Local Ventilation Airflow Rates	Continuous Local Exhaust Airflow Rates
Habitable rooms (other than kitchens)	0.35 ach each, but not less than 15 ft^3/min (7.5 L/s) per person	
Kitchens	100 ft^3/min (50 L/s)	5 ach
Residential bathroom and toilet rooms	50 ft^3/min (25 L/s)	20 ft^3/min (10 L/s)

ach: air changes per hour.

Notes:

(1) Intermittent local ventilation is designed to be operated as needed by the occupant.

(2) Continuous local ventilation is designed to operate without occupant intervention.

49.2.2.8 Where rooms and spaces without openings to the outdoors are ventilated through an adjoining room, the unobstructed opening to the adjoining room shall be at least 8 percent of the floor area of the interior room or space, but not less than 25 ft^2 (2.33 m^2). The ventilation openings to the outdoors shall be based on the total floor area being ventilated.

49.2.3 Ventilating Systems in Spaces Using Chemicals or Containing Hazardous Agents. Ventilating systems in laboratories or spaces using chemicals or containing hazardous agents shall be in accordance with the applicable provisions of NFPA 45, *Standard on Fire Protection for Laboratories Using Chemicals*; NFPA 99, *Standard for Health Care Facilities*; and Chapter 34.

49.2.4 Commercial Cooking Equipment. Systems for the ventilation of commercial cooking equipment shall be designed, constructed, and installed in accordance with Chapter 50.

49.2.5 Radon Control Methods.

49.2.5.1 General. The radon control methods discussed in this chapter represent a combination of good construction practices that have been coupled with specific radon removal strategies. The radon control methods presented are based on radon mitigation procedures that have been used successfully for various foundation types *(see Figure 49.2.5.3.3.4, Figure 49.2.5.3.4, Figure 49.2.5.3.5, and Figure 49.2.5.3.5.1)* and include options to accommodate regional construction practices and site conditions. These techniques, in combination with a recommended test by the homeowner after occupancy, provide radon reduction in newly constructed homes.

49.2.5.2 Applicability.

49.2.5.2.1 This chapter shall establish requirements to control radon levels in new construction of one- and two-family dwellings and other residential buildings three stories or less in height as defined by this *Code*.

49.2.5.2.2 The requirements of this chapter shall be applicable when additions are made to the foundations of existing one- and two-family dwellings that result in extension of the building footprint.

49.2.5.2.3* The requirements of this chapter shall be applicable in all Zone 1 counties, as designated by the map of radon zones shown in Figure 49.2.5.2.3, developed by the U.S. Geological Survey and U.S. Environmental Protection Agency. In addition, the requirements of this chapter shall be applicable in all areas designated by local officials as Zone 1, based on locally available data.

49.2.5.3 Requirements.

49.2.5.3.1 Subfloor Preparation. A layer of gas-permeable material shall be placed under all concrete slabs and wood-framed basement floors, and other floor systems that directly contact the ground and are within the walls of the living spaces of the building, to facilitate future installation of a sub-slab depressurization system, if needed. The gas-permeable layer shall consist of one of the following:

(1) Uniform layer of clean aggregate that is a minimum of 4 in. (100 mm) thick and that consists of material that will pass through a 2 in. (51 mm) sieve and be retained by a ¼ in. (6.3 mm) sieve
(2) Uniform layer of sand (native or fill), a minimum of 4 in. (100 mm) thick, overlain by a layer or strips of 1 in. (25 mm) geotextile drainage matting designed to allow the lateral flow of soil gases
(3) Other materials, systems, or floor designs with demonstrated capability to allow depressurization across the entire subfloor area

Copyright National Fire Protection Association
Provided by IHS under license with NFPA
No reproduction or networking permitted without license from IHS
Not for Resale

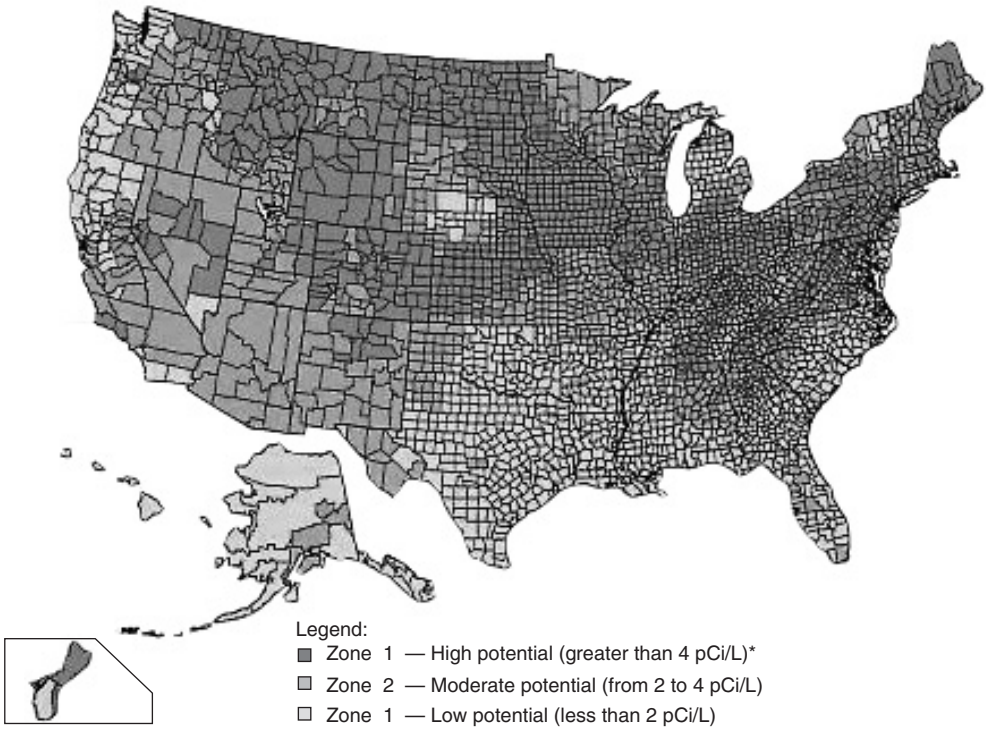

* A list of high potential (Zone 1) counties can be found in Annex A, Table A.49.2.5.2.3.

FIGURE 49.2.5.2.3 EPA Map of Radon Zones.

49.2.5.3.2 Soil-Gas Retarder. A minimum 6 mil (0.15 mm) [or 3 mil (0.075 mm) cross-laminated] polyethylene or equivalent flexible sheeting shall be placed on top of the gas-permeable layer prior to casting the slab or constructing the floor. The sheeting shall cover the entire floor assembly to serve as a soil–gas retarder by bridging any cracks that develop in the slab or floor assembly and to prevent concrete from entering the void spaces in the aggregate base material. The sheeting shall cover the entire floor area, with separate sections of sheeting lapped at least 12 in. (305 mm). The sheeting shall fit closely around any pipe, wire, or other penetrations of the material. All punctures or tears in the material shall be sealed or covered with additional sheeting.

49.2.5.3.3 Entry Routes. Potential soil–gas entry routes shall be closed in accordance with 49.2.5.3.3.1 through 49.2.5.3.3.10.

49.2.5.3.3.1 Floor Openings. Openings around bathtubs, showers, water closets, pipes, wires, or other objects that penetrate concrete slabs or other floor assemblies shall be filled with a polyurethane caulk or equivalent sealant applied in accordance with the manufacturer's recommendations.

49.2.5.3.3.2 Concrete Joints. All control joints, isolation joints, construction joints, and any other joints in concrete slabs or between slabs and foundation walls shall be sealed with a caulk or sealant. Gaps and joints shall be cleared of loose material and filled with polyurethane caulk or other elastomeric sealant applied in accordance with the manufacturer's recommendations.

49.2.5.3.3.3 Condensate Drains. Condensate drains shall be trapped or routed through nonperforated pipe to daylight.

49.2.5.3.3.4 Sumps. Sump pits open to soil or serving as the termination point for sub-slab or exterior drain tile loops shall be covered with a gasketed or otherwise sealed lid in accordance with Figure 49.2.5.3.3.4. Sumps used as the suction point in a sub-slab depressurization system shall have a lid designed to accommodate the vent pipe. Sumps used as a floor drain shall have a lid equipped with a trapped inlet.

49.2.5.3.3.5 Foundation Walls. Hollow block masonry foundation walls shall be constructed with either a continuous course of solid masonry, one course of masonry grouted solid, or a solid concrete beam at or above finished ground surface to prevent passage of air from the interior of the wall into the living space. Where a brick veneer or other masonry ledge is installed, the course immediately below that ledge shall be sealed. Joints, cracks, or other openings around all penetrations of both exterior and interior surfaces of hollow foundation walls below the ground surface shall be filled with polyurethane caulk or equivalent sealant. Penetrations of concrete walls shall be filled.

49.2.5.3.3.6 Dampproofing. The exterior surfaces of portions of walls below the ground surface shall be dampproofed as required by Chapter 36 of this *Code*.

49.2.5.3.3.7 Air-Handling Units. Air-handling units in crawl spaces shall be sealed to prevent air from being drawn into the unit, either by the manufacturer or in the field.

49.2.5.3.3.8 Ducts. Ductwork passing through a crawl space or beneath a slab shall be of seamless material, unless the air-handling system is designed to maintain continuous positive pressure within such ducting. Joints in such ductwork shall be sealed to prevent air leakage.

--`,,```,,,,````-`-`,,`,,`,`,,`---

Copyright National Fire Protection Association
Provided by IHS under license with NFPA
No reproduction or networking permitted without license from IHS
Not for Resale

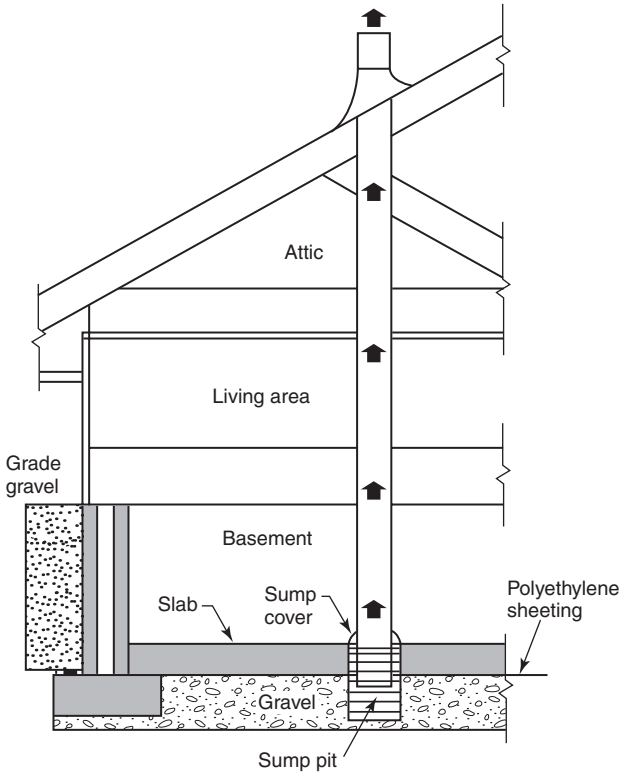

FIGURE 49.2.5.3.3.4 Passive Radon System Vented Through Sump.

49.2.5.3.3.9 Crawl Space Floors. Openings around all penetrations through floors above crawl spaces shall be caulked or otherwise filled to prevent air leakage.

49.2.5.3.3.10 Crawl Space Access. Access doors and other openings or penetrations between basements and adjoining crawl spaces shall be closed, gasketed, or otherwise filled to prevent air leakage.

49.2.5.3.4 Passive Submembrane Depressurization System. In buildings with crawl space foundations, the following components of a passive submembrane depressurization system shall be installed during construction in accordance with Figure 49.2.5.3.4, unless an approved mechanical crawl space ventilation system or other equivalent system is installed.

49.2.5.3.4.1 Ventilation. Crawl spaces shall be provided with vents to the exterior of the building. The minimum net area of ventilation openings shall comply with this chapter.

49.2.5.3.4.2 Soil–Gas Retarder. The soil in crawl spaces shall be covered with a continuous layer of minimum 6 mil (0.15 mm) polyethylene sheeting or equivalent material. The ground cover shall be lapped a minimum of 12 in. (305 mm) at joints, shall be sealed to any piers and around any penetrations, and shall extend to all foundation walls enclosing the crawl space area walls.

49.2.5.3.4.3 Vent Pipe.

(A) A plumbing tee or other approved connection shall be inserted horizontally beneath the sheeting and connected to a minimum 3 in. (75 mm), maximum 4 in. (100 mm), diameter fitting with a vertical vent pipe installed through the sheeting.

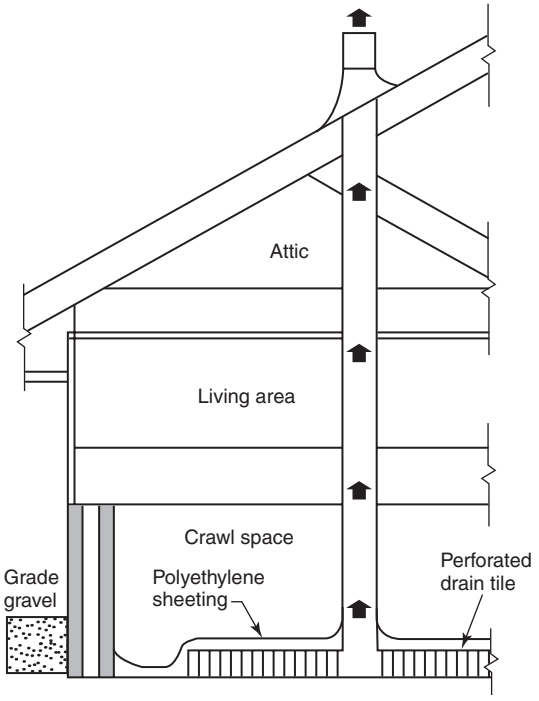

FIGURE 49.2.5.3.4 Passive Submembrane Depressurization System for Crawl Space.

(B) The vent pipe shall meet the following criteria:

(1) It shall extend up through the building floors, terminating at least 12 in. (305 mm) above the surface of the roof at a location at least 10 ft (3050 mm) away from any window or other opening into the conditioned spaces of the building that is less than 24 in. (610 mm) below the exhaust point.
(2) It shall terminate at least 10 ft (3050 mm) from any window or other opening in adjoining or adjacent buildings.

49.2.5.3.5 Passive Sub-Slab Depressurization System. In basement or slab-on-grade buildings, the components of a passive sub-slab depressurization system, as specified in 49.2.5.3.5.1 through 49.2.5.3.5.8, shall be installed during construction in accordance with Figure 49.2.5.3.5.

49.2.5.3.5.1 Vent Pipe.

(A) A minimum 3 in. (75 mm) diameter ABS, PVC, or equivalent gas-tight pipe shall be embedded vertically into the sub-slab aggregate or other permeable material before the slab is cast. A "T" fitting or equivalent method shall be used to ensure that the pipe opening remains within the sub-slab permeable material. Alternatively, the pipe shall be inserted directly into an interior perimeter drain tile loop, or through a sealed sump cover where the sump is exposed to the sub-slab aggregate or connected to it through a drainage system in accordance with Figure 49.2.5.3.5.1.

(B) The vent pipe shall meet the following criteria:

(1) It shall extend up through the building floors, terminating at least 12 in. (305 mm) above the surface of the roof, at a location at least 10 ft (3050 mm) away from any window or other opening into the conditioned spaces of the building that is less than 24 in. (610 mm) below the exhaust point.
(2) It shall terminate at least 10 ft (3050 mm) from any window or other opening in adjoining or adjacent buildings.

Copyright National Fire Protection Association
Provided by IHS under license with NFPA
No reproduction or networking permitted without license from IHS
Not for Resale

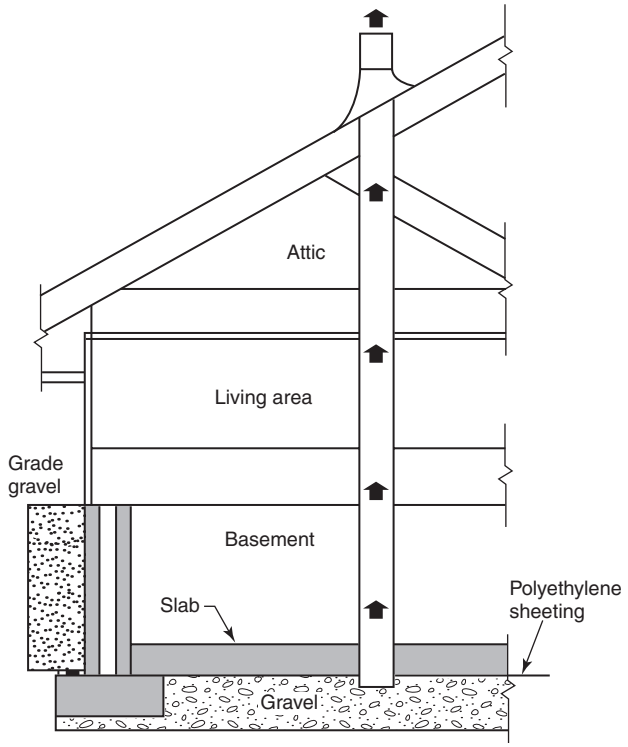

FIGURE 49.2.5.3.5 Passive Sub-Slab Depressurization Radon System.

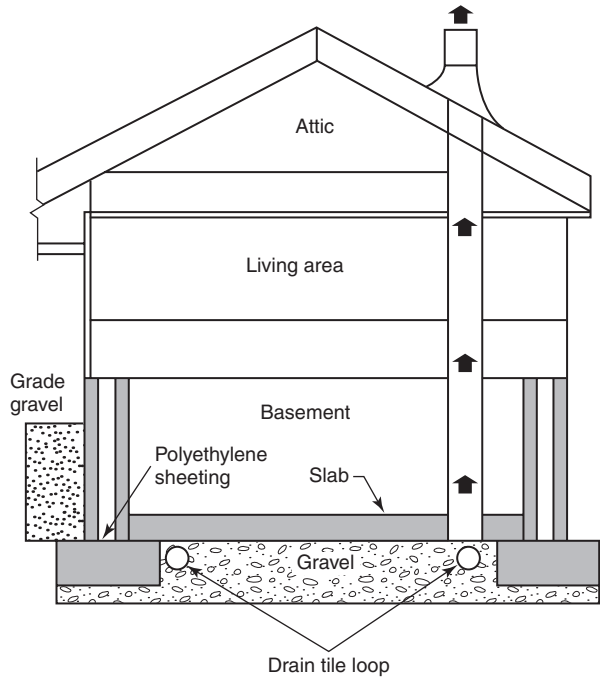

FIGURE 49.2.5.3.5.1 Passive Radon System Using Drain Tile Loop.

49.2.5.3.5.2 Multiple Vent Pipes. In buildings where interior footings or other barriers separate the sub-slab aggregate or other gas-permeable material, each area shall be fitted with an individual vent pipe. Vent pipes shall connect to a single vent that terminates above the roof, or each individual vent pipe shall terminate separately above the roof.

49.2.5.3.5.3 Vent Pipe Drainage. All components of the radon vent pipe system shall be installed to provide positive drainage to the ground beneath the slab or soil–gas retarder.

49.2.5.3.5.4 Vent Pipe Accessibility.

(A) Radon vent pipes shall be accessible for future fan installation through an attic or other area outside the habitable space.

(B) The radon vent pipe shall not be required to be accessible in an attic space where an approved rooftop electrical supply is provided for future use.

49.2.5.3.5.5 Vent Pipe Identification.

(A) All exposed and visible interior vent pipes shall be identified with at least one label on each floor and in accessible attics, and the label shall read as follows:

PASSIVE RADON REDUCTION SYSTEM

(B) In addition to the label specified in 49.2.5.3.5.5(A), a notice to the homeowner shall be placed in a conspicuous area near the vent pipe that states the following:

**THERE ARE NO REQUIREMENTS
FOR THIS RADON REDUCTION SYSTEM
TO BE TESTED BY THE BUILDER.
IT IS RECOMMENDED THAT OCCUPANTS TEST FOR
RADON AND TAKE REMEDIAL ACTION AS NECESSARY.
CALL 1-800-SOS-RADON FOR MORE INFORMATION.**

49.2.5.3.5.6 Combination Foundations. Combination basement/crawl space or slab-on-grade/crawl space foundations shall have separate vent pipes installed in each type of foundation area. Each vent pipe shall terminate above the roof or shall be connected to a single vent that terminates above the roof.

49.2.5.3.5.7 Building Depressurization. Joints in air ducts and plenums in unconditioned spaces shall meet the requirements of Chapter 50. Thermal envelope air infiltration requirements shall comply with the energy conservation provisions in Chapter 51. Firestopping shall meet the requirements contained in Chapter 8 of this *Code*.

49.2.5.3.5.8 Power Source. To provide for future installation of an active sub-membrane or sub-slab depressurization system, an electrical circuit terminated in an approved box shall be installed in the attic or other anticipated location of the vent pipe fan during construction. An electrical supply shall also be accessible in anticipated locations of system failure alarms.

49.2.6* Flood Hazard Areas. For new construction of buildings and structures located wholly or partly within flood hazard areas established by 39.4.2, including substantial improvements and restoration of substantial damage, ventilation openings required by this chapter shall be located above the design flood elevation.

49.3 Lighting.

49.3.1 Natural or fixed artificial lighting shall be provided to all rooms used by human beings in accordance with 49.3.2 and 49.3.3. Lighting for means of egress shall be provided in accordance with 49.3.4.

Copyright National Fire Protection Association
Provided by IHS under license with NFPA
No reproduction or networking permitted without license from IHS
Not for Resale

49.3.2 Where natural light is provided, the net glazed area shall be not less than 8 percent of the total area of the room served.

49.3.3 Fixed artificial lighting shall be permitted to be substituted for natural lighting. Fixed artificial lighting shall be capable of providing an average of 10 foot-candles (10 lumens/ft^2) of illumination, measured at a height of 30 in. (760 mm) above the floor.

49.3.4 Lighting of the means of egress shall be provided in accordance with Sections 11.8 and 11.9 of this *Code*.

49.4 Sound Transmission.

49.4.1 General. The provisions of Section 49.4 shall apply to dwelling units in two-family dwellings, townhouses, and apartment buildings; guest rooms and guest suites in hotels and dormitories; and sleeping rooms in lodging and rooming houses and residential board and care occupancies, hereinafter referred to as living units.

49.4.2 Airborne Sound Transmission.

49.4.2.1 All interior walls and floor-ceiling assemblies that separate living units, and that separate living units and spaces not a part of the living unit, shall have a sound transmission class (STC) of not less than 50 for airborne noise when tested in accordance with ASTM E 90, *Standard Test Method for Laboratory Measurement of Airborne Sound Transmission Loss of Building Partitions and Elements*.

49.4.2.2 The requirement of 49.4.2.1 shall not apply to entrance doors to living units, provided that the door is tight-fitting to the frame and sill.

49.4.3 Structure-Borne Sound Transmission. All floor-ceiling assemblies between living units, and between living units and spaces not a part of the living unit, shall have an impact insulation class (IIC) of not less than 45 when tested in accordance with ASTM E 492, *Standard Test Method for Laboratory Measurement of Impact Sound Through Floor-Ceiling Assemblies Using the Tapping Machine*.

49.5 Interior Space Dimensions.

49.5.1 Ceiling Heights.

49.5.1.1 In all occupancies, other than within dwelling units, ceilings of habitable rooms shall be designed and maintained to provide headroom as provided in other sections of this *Code* and shall be not less than 7 ft 6 in. (2285 mm), with projections from the ceiling not less than 6 ft 8 in. (2030 mm) nominal height above the finished floor. The minimum ceiling height shall be maintained for not less than two-thirds of the ceiling area of any room or space, provided that the ceiling height of the remaining ceiling area is not less than 6 ft 8 in. (2030 mm).

49.5.1.2 Hallways in one- and two-family dwellings shall comply with 22.2.6.2.

49.5.1.3 Rotary fan blades in all occupancies shall be protected where the blades of the fan are located within 7 ft (2135 mm) of the finished floor. They shall be protected with guards with openings that will prohibit the passage of a ½ in. (13 mm) sphere.

49.5.1.4 Rotary fan blades in dwelling units located not less than 6 ft 8 in. (2030 mm) above the finished floor shall not be required to be protected with guards.

49.5.2 Minimum Room Dimensions — Residential Occupancies.

49.5.2.1 Where habitable rooms *(see 3.3.534.4, Habitable Room)* are created, other than a kitchen, they shall be not less than 7 ft (2135 mm) in any plan dimension.

49.5.2.2 Where habitable rooms *(see 3.3.534.4, Habitable Room)* are created space, they shall have a ceiling height of not less than 7 ft 6 in. (2286 mm).

Exception No. 1: The requirement of 49.5.2.2 shall not apply to beams, girders, ducts, or pipes spaced not less than 4 ft (1220 mm) on center and projecting not more than 6 in. (150 mm) below the required ceiling height.

Exception No. 2: For rooms with a sloped ceiling, the minimum 7 ft 6 in. (2286 mm) ceiling height shall be exempted for all but 35 ft^2 (3.25 m^2) of the floor area of the room. Any portion of the room measuring less than 5 ft (1525 mm) from the finished floor to the finished ceiling shall not be considered usable floor area and shall not be included in any computation of the minimum area thereof.

49.6 Access to Attics.

49.6.1 Where mechanical or electrical equipment or utility piping is installed in attics, access shall be provided.

49.6.2 Attic access openings shall be not less than 22 in. × 30 in. (560 mm × 760 mm).

49.7 Design Conditions.

49.7.1 General. All rooms and occupied spaces in buildings shall have indoor winter design comfort conditions in accordance with the provisions of this chapter.

49.7.2 Outdoor Climatic Data.

49.7.2.1 The outdoor climatic data required for the design of indoor comfort conditioning equipment shall be the climatic data published in the ASHRAE *Handbook of Fundamentals*, unless otherwise established by the authority having jurisdiction.

49.7.2.2 The outside winter design temperatures shall be those listed for the heating dry bulb (DB), 99 percent annual cumulative frequency of occurrence, and the outside cooling design temperatures shall be those listed for the cooling dry bulb and wet bulb, 1 percent annual cumulative frequency of occurrence, unless otherwise established by the authority having jurisdiction.

49.7.3 Indoor Design Conditions.

49.7.3.1 Indoor winter design conditions for all occupancies shall be within the winter comfort zone as published in ASHRAE 55, *Thermal Environmental Conditions for Human Occupancy*, and the ASHRAE *Handbook of Fundamentals*, unless otherwise established by the authority having jurisdiction.

49.7.3.2 Indoor design conditions for residential board and care occupancies shall be within the winter and summer comfort zones, as published in ASHRAE 55, *Thermal Environmental Conditions for Human Occupancy*, and the ASHRAE *Handbook of Fundamentals*, unless otherwise established by the authority having jurisdiction.

49.8 Special Requirements for Occupancies. Where either natural or artificial lighting is provided in educational occupancies, the minimum light level values in Table 49.8 shall be maintained at work levels.

49.9 Vermin Proofing. (Reserved — See Annex B.)

--`,,```,,,,````-`-`,,`,,`,`,,`---

Copyright National Fire Protection Association
Provided by IHS under license with NFPA
No reproduction or networking permitted without license from IHS
Not for Resale

Table 49.8 General Lighting Levels

Area	Minimum Light Level (ft-candle or lumens/ft^2)
Lecture/demonstration	150
Sewing	150
Drafting	100
Cooking	50
Other	70

Note: There is no general listing of lighting level. The requirements for special occupancies are in Section 11.9.

Chapter 50 Mechanical Systems

50.1 General. All mechanical systems and equipment shall be designed and constructed in accordance with the following:

(1) Fuel gas appliances shall be designed and constructed in accordance with NFPA 54, *National Fuel Gas Code*.
(2) Oil-burning appliances shall be designed and constructed in accordance with NFPA 31, *Standard for the Installation of Oil-Burning Equipment*.
(3) The following shall be designed and installed in accordance with NFPA 85, *Boiler and Combustion Systems Hazards Code*:
   (a) The following with a fuel input rating of 12.5 million Btu/hr (3663 MW)
      i. Single-burner boilers
      ii. Multiple-burner boilers
      iii. Stokers
      iv. Atmospheric – atmospheric fluidized bed boilers with a fuel input rating of 12.5 million Btu/hr (3663 MW) or greater
   (b) Pulverized fuel systems
   (c) Fired or unfired steam generators used to recover heat from combustion turbine heat recovery steam generators (HRSG), including associated fuel systems
(4) Solid fuel appliances shall be designed and constructed in accordance with NFPA 211, *Standard for Chimneys, Fireplaces, Vents, and Solid Fuel-Burning Appliances*.
(5) Exhaust systems for air conveying of materials shall be designed and constructed in accordance with NFPA 91, *Standard for Exhaust Systems for Air Conveying of Vapors, Gases, Mists, and Noncombustible Particulate Solids*.
(6) Commercial kitchens shall be designed and constructed in accordance with NFPA 96, *Standard for Ventilation Control and Fire Protection of Commercial Cooking Operations*.
(7) Stationary fuel cell power plants shall be constructed, designed, and installed in accordance with NFPA 853, *Standard for the Installation of Stationary Fuel Cell Power Systems*.
(8) Air-conditioning and ventilating systems shall be designed and constructed in accordance with NFPA 90A, *Standard for the Installation of Air-Conditioning and Ventilating Systems*.
(9) Warm air heating and air-conditioning systems shall be designed and constructed in accordance with NFPA 90B, *Standard for the Installation of Warm Air Heating and Air-Conditioning Systems*.
(10) All other mechanical systems and equipment shall be designed and constructed in accordance with the *Uniform Mechanical Code*.

50.2 Flood Resistance. For new construction of buildings and structures that are located wholly or partly within flood hazard areas established by 39.4.2, including substantial improvements and restoration of substantial damage, all mechanical systems and equipment below the design flood elevation, including ductwork, shall meet the requirements of Section 8 of SEI/ASCE 24, *Flood Resistant Design and Construction*.

50.3 Refrigeration Machinery Room. Refrigeration systems shall comply with this *Code*. Where a refrigeration machinery room is required, it shall be separated from the remainder of the building or located on the property, as required by ANSI/ASHRAE 15. Structural supporting elements shall be protected only for the type of construction and not the occupancy separation. Means of egress from the machinery room shall comply with 50.3.1. Nothing contained herein shall be used to limit the height or area of the building or the machinery room. The refrigeration system, its refrigerant, and its safety devices shall be maintained in accordance with the *Uniform Mechanical Code* and ANSI/ASHRAE 15.

50.3.1 Refrigeration Machinery Room Egress.

50.3.1.1 Access to Exits. Machinery rooms larger than 1000 ft^2 (93 m^2) shall have access to not less than two exits.

50.3.1.2 Travel Distance. Travel distance shall be determined as specified in Section 29.2, but all portions of the machinery room shall be within 150 ft (45 m) of an exit or exit access doorway.

50.3.1.3 Doors. Doors and door swing shall be in accordance with ANSI/ASHRAE 15.

Chapter 51 Energy Efficiency

51.1 General. The requirements of this chapter shall regulate the energy-efficient design of the building envelope; the conditioning of the enclosed environment through heating, venting, and air-conditioning equipment and systems; and other equipment and systems that contribute the building's energy consumption.

51.1.1 Application. Energy efficient design requirements shall govern the following:

(1) New construction
(2) Additions, alterations, modernizations, or renovations to existing buildings or structures

51.1.2 Occupancy Classification. For the purposes of this chapter, each occupancy within the building or structure shall be subject to the applicable requirements for that occupancy. Where an occupancy contains another occupancy whose area is less than 10 percent of the area of the total floor area in which it is located, the primary occupancy shall be considered the occupancy.

51.1.3 Special Definitions. (Reserved)

51.2 Commercial.

51.2.1 The following occupancies shall meet the requirements of ASHRAE/IESNA 90.1, *Energy Standard for Buildings Except Low-Rise Residential Buildings*:

(1) Assembly
(2) Educational
(3) Health care
(4) Ambulatory health care

Copyright National Fire Protection Association
Provided by IHS under license with NFPA
No reproduction or networking permitted without license from IHS
Not for Resale

(5) Detention and correctional
(6) Lodging or rooming house
(7) Hotels and dormitory
(8) Apartment buildings of more than three stories above grade
(9) Mercantile
(10) Business

51.2.2 The following occupancies shall be exempt from the provisions of this chapter:

(1) Storage
(2) Industrial

51.3 Residential.

51.3.1 Low-rise residential buildings shall meet the requirements of ASHRAE 90.2, *Energy Efficient Design of Low-Rise Residential Buildings*.

51.4 Manufactured Homes. One- and two-family dwellings shall meet the requirements of Chapter 6, Thermal Protection, and Chapter 8, Heating, Cooling, and Fuel Burning Systems, of NFPA 501, *Standard on Manufactured Housing*.

51.5 Day Care.

51.5.1 Day-care homes located within a one- or two-family dwelling shall be classified as residential occupancies for the purposes of this chapter and shall comply with the requirements of 51.3.1.

51.5.2 Day-care occupancies, other than those specified in 51.5.1, shall be classified as commercial occupancies for the purposes of this chapter and shall comply with the requirements of 51.2.1.

51.6 Residential Board and Care.

51.6.1 Small facilities located within a one- or two-family dwelling shall be classified as residential occupancies for the purposes of this chapter and shall comply with the requirements of 51.3.1.

51.6.2 Residential board and care facilities, other than those specified in 51.6.1, shall be classified as commercial occupancies for the purposes of this chapter and shall comply with the requirements of 51.2.1.

Chapter 52 Electrical Systems

52.1* General. All electrical systems and equipment shall be designed and constructed in accordance with NFPA 70, *National Electrical Code*.

52.2 Flood Resistance. For new construction of buildings and structures that are located wholly or partly within flood hazard areas established by 39.4.2, including substantial improvements and restoration of substantial damage, electrical systems and equipment below the design flood elevation shall meet the requirements of Section 8 of SEI/ASCE 24, *Flood Resistant Design and Construction*.

Chapter 53 Plumbing Systems

53.1 General. All plumbing systems and equipment shall be designed and installed in accordance with the following:

(1) The installation of fuel gas distribution piping and equipment, fuel gas—fired water heaters, and water heater venting systems shall be designed and installed in accordance with NFPA 54/ANSI Z233.1, *National Fuel Gas Code*.
(2) The installation of liquefied gas distribution piping, equipment, and systems shall be designed and installed in accordance with NFPA 58, *Liquefied Petroleum Gas Code*.
(3) The installation of piping and equipment in health care facilities shall be designed and installed in accordance with NFPA 99, *Standard for Health Care Facilities*.
(4) All other plumbing systems shall be designed and installed in accordance with the 2003 *Uniform Plumbing Code*.

53.2 Flood Resistance. For new construction of buildings and structures that are located wholly or partly within flood hazard areas established by 39.4.2, and including substantial improvements and restoration of substantial damage, plumbing systems and equipment below the design flood elevation shall meet the requirements of Section 8 of SEI/ASCE 24, *Flood Resistant Design and Construction*.

Chapter 54 Elevators and Conveying Systems

54.1 General. An elevator shall not be considered a component in a required means of egress but shall be permitted as a component in an accessible means of egress and as permitted by 11.2.13.

54.2 Installation. Except as modified herein, elevators, escalators, dumbwaiters, and moving walks shall be installed in accordance with the requirements of ASME A17.1, *Safety Code for Elevators and Escalators*.

54.3 Ambulance Stretcher Accommodation. In buildings of more than three stories, a minimum of one elevator shall be provided for fire fighter emergency operation to all floors. The elevator car shall be sized and arranged to accommodate a 2 ft × 6 ft 4 in. ambulance stretcher in the horizontal, open position. The elevator car shall be identified by the international symbol for emergency medical services (star of life). The symbol shall be minimum 3 in. (75 mm) in height and shall be located inside the car on both sides of the door frame.

54.4 Openings to Exits. Conveyors, elevators, dumbwaiters, and pneumatic conveyors serving various stories of a building shall not open to an exit.

54.5 Elevator Machine Rooms and Machinery Spaces. Elevator machine rooms and machinery spaces that contain solid-state equipment for elevators that have a travel distance of more than 50 ft (15 m) above the level of exit discharge, or more than 30 ft (9.1 m) below the level of exit discharge, shall be provided with independent ventilation or air-conditioning systems to maintain the required temperature during fire fighter service operations for elevator operation.

54.5.1 The operating temperature shall be established by the elevator equipment manufacturer's specifications.

54.5.2 Where standby power is connected to the elevator, the machine room ventilation or air-conditioning shall be connected to standby power.

54.5.3 Elevator machine rooms and machinery spaces shall be enclosed with fire barrier walls meeting one of the following criteria:

(1) The fire barrier walls shall have a fire resistance rating of not less than the required rating of the hoistway enclosure the machine rooms or machinery spaces serve.

Copyright National Fire Protection Association
Provided by IHS under license with NFPA
No reproduction or networking permitted without license from IHS
Not for Resale

(2) The fire barrier walls shall have a minimum 1-hour fire resistance rating where the machine rooms and machinery spaces do not abut, and do not have openings to, the hoistway enclosure they serve.
(3) The fire barrier walls shall have a minimum 1-hour fire resistance rating where the machine rooms or machinery spaces serve a hoistway that is not required to be fire resistance rated.

54.5.4 Openings shall be protected with assemblies having a fire protection rating meeting one of the following criteria:

(1) The opening protective assembly shall have a minimum rating not less than that required for the hoistway enclosure doors.
(2) The opening protective assembly shall have a minimum ¾-hour rating where the machine rooms and machinery spaces do not abut, and do not have openings to, the hoistway enclosure they serve.
(3) The opening protective assembly shall have a minimum ¾-hour rating where the machine rooms and machinery spaces serve a hoistway that is not required to be fire resistance rated.

54.6 Number of Cars in a Hoistway.

54.6.1 Where four or more cars serve all or the same portion of a building, the elevators shall be located in at least two separate hoistways.

54.6.2 Not more than four elevator cars shall be located in any single hoistway enclosure.

54.7 Hoistway Enclosure.

54.7.1 Hoistway enclosures shall be permitted to be glass, provided that both of the following criteria are met:

(1) The hoistway enclosure is not required to be fire resistance–rated.
(2) The glass is laminated glass meeting the requirements of one of the following:
   (a) ANSI Z97.1, *Glazing Materials Used in Buildings, Safety Performance Specifications and Methods of Test*
   (b) CPSC 16 CFR 1201, *Safety Standard for Architectural Glazing Materials*

54.7.2 Each separate piece of laminated glass used in the hoistway enclosure shall be marked as required by the applicable standard specified in 54.7.1.

54.7.3 The marking required by 54.7.2 shall remain visible after installation.

54.8* Flood Resistance. For new construction of buildings and structures that are located wholly or partly within flood hazard areas established by 39.4.2, including substantial improvements and restoration of substantial damage, all elevator equipment shall meet the requirements of Section 8 of SEI/ASCE 24, *Flood Resistant Design and Construction.*

54.9 Vents Required. Hoistways of elevators and dumbwaiters penetrating more than three stories shall be provided with a means of venting smoke and hot gases to the outer air in case of fire.

54.9.1 Location of Vents. Vents shall be located below the ceiling at the top of the hoistway and shall open either directly to the outer air or through noncombustible ducts to the outer air.

54.9.1.1 Noncombustible ducts shall be permitted to pass through the elevator machine room, provided that portions of the ducts located outside of the hoistway or machine room are enclosed by construction having not less than the fire resistance rating required for the hoistway.

54.9.1.2 Holes in machine room floors for the passage of ropes, cables, or other moving elevator equipment shall be limited so as not to provide greater than 2 in. (51 mm) of clearance on all sides.

54.9.2 Area of Vents.

54.9.2.1 The area of vents shall be not less than 3½ percent of the area of each elevator car in the hoistway or not less than 3 ft^2 (0.028 m^2), whichever is greater.

54.9.2.2 The area of vents shall be not less than 3½ percent of the area of each dumbwaiter car in the hoistway or not less than 0.5 ft^2 (0.047 m^2), whichever is greater.

54.9.2.3 The requirements of 54.9.2.1 and 54.9.2.2 shall not apply where mechanical ventilation conforming to the *Uniform Mechanical Code* provides equivalent venting, in which case the required vent area shall be permitted to be reduced, provided that the building is not used for health care, hotel, apartment, lodging or rooming house, residential board and care, or similar occupancies with overnight sleeping accommodations.

54.9.3 Closed Vents. Vents shall be permitted to be closed. Closed vents shall open upon detection of smoke in any elevator lobby. In addition, closed vents shall open upon power failure. A manual override shall also be provided at an approved location.

54.10 Conveying Systems. Conveying systems shall be installed in accordance with ASME B20.1, *Safety Standard for Conveyors and Related Equipment.*

54.11 Wheelchair Lifts. Wheelchair lifts shall be installed in accordance with ASME A18.1, *Safety Standard for Platform Lifts and Stairway Chair Lifts.*

Chapter 55 Fire Protection Systems and Equipment

55.1 General.

55.1.1 Referenced Standards. Fire protection systems and equipment shall be designed, installed, and maintained in operating condition in accordance with the requirements of this chapter and the referenced documents.

55.1.2 Required Systems. Fire protection systems installed to make use of alternatives permitted by this *Code* shall be considered required systems and shall meet the provisions of this *Code* applicable to required systems.

55.1.3 Existing Systems. Existing installations of fire protection systems and equipment shall be permitted to continue in use subject to the approval of the authority having jurisdiction and in accordance with 1.7.5.

55.1.4 Inspection, Maintenance, and Testing. Fire protection systems and equipment shall have an approved inspection, maintenance, and testing program complying with the requirements of the standards referenced herein and NFPA 1.

55.1.5 Documentation. All required documentation regarding the design and procedures for maintenance, inspection, and testing of fire protection systems shall be maintained in a

Copyright National Fire Protection Association
Provided by IHS under license with NFPA
No reproduction or networking permitted without license from IHS
Not for Resale

secured location on the premises for the life of the fire protection systems.

55.1.6 Conflicts between the fire safety requirements of this chapter and the flood resistance requirements of Chapter 39 shall be resolved according to 39.1.2.

55.2 Fire Detection, Alarm, and Communications Systems.

55.2.1* General.

55.2.1.1 The provisions of Section 55.2 shall apply only where specifically required by another section of this *Code*.

55.2.1.2 A fire alarm system shall be installed in accordance with the applicable requirements of Chapter 52 and *NFPA 72, National Fire Alarm Code*.

55.2.1.3 For the purposes of this *Code*, a complete fire alarm system shall be used for initiation, notification, and control and shall provide the following:

(1) The initiation function shall provide the input signal to the system.
(2) The notification function shall be the means by which the system advises that human action is required in response to a particular condition.
(3) The control function shall provide outputs to control building equipment to enhance protection of life.

55.2.2 Signal Initiation. Where required by other sections of this *Code*, actuation of the complete fire alarm system shall occur by any or all of the following means of initiation, but shall not be limited to such means:

(1) Manual fire alarm initiation
(2) Automatic detection
(3) Extinguishing system operation

55.2.2.1 Manual Fire Alarm Boxes. Manual fire alarm boxes shall comply with 55.2.2.1.1 through 55.2.2.1.7.

55.2.2.1.1 Manual fire alarm boxes shall be used only for fire-protective signaling purposes.

55.2.2.1.2 Combination fire alarm and guard's tour stations shall be permitted to meet the requirement of 55.2.2.1.1.

55.2.2.1.3 A manual fire alarm box shall be provided in the natural exit access path near each required exit from an area, unless modified by another section of this *Code*.

55.2.2.1.4* Additional manual fire alarm boxes shall be located so that, from any part of the building, no horizontal distance on the same floor exceeding 200 ft (61 m) shall be traversed to reach a manual fire alarm box.

55.2.2.1.5* For fire alarm systems using automatic fire detection or waterflow detection devices, not less than one manual fire alarm box shall be provided to initiate a fire alarm signal.

55.2.2.1.6 The manual fire alarm box described in 55.2.2.1.5 shall be located where required by the authority having jurisdiction.

55.2.2.1.7* Each manual fire alarm box on a system shall be accessible, unobstructed, and visible.

55.2.2.2 Sprinkler System Alarm Initiation. Where a sprinkler system provides automatic detection and alarm system initiation, it shall be provided with an approved alarm initiation device that operates when the flow of water is equal to or greater than that from a single automatic sprinkler.

55.2.2.3 Total Coverage Smoke Detection. Where a total (complete) coverage smoke detection system is required by another section of this *Code*, automatic detection of smoke in accordance with *NFPA 72* shall be provided in all occupiable areas, common areas, and work spaces in those environments suitable for proper smoke detector operation.

55.2.2.4 Partial Smoke Detection. Partial smoke detection systems shall comply with 55.2.2.4.1 and 55.2.2.4.2.

55.2.2.4.1 Where a partial smoke detection system is required by another section of this *Code*, automatic detection of smoke in accordance with *NFPA 72* shall be provided in all common areas and work spaces, such as corridors, lobbies, storage rooms, equipment rooms, and other tenantless spaces in those environments suitable for proper smoke detector operation.

55.2.2.4.2 Selective smoke detection unique to other sections of this *Code* shall be provided as required by those sections.

55.2.2.5 Hazardous Areas. Where required by Chapters 16 through 30, an automatic fire detection system shall be provided in hazardous areas for initiation of the signaling system.

55.2.2.6 Smoke Alarms. Smoke alarms shall comply with 55.2.2.6.1 through 55.2.2.6.5.

55.2.2.6.1 Where required by another section of this *Code*, single-station and multiple-station smoke alarms shall be in accordance with *NFPA 72*, and system detectors in accordance with *NFPA 72*, arranged to function in the same manner, shall be permitted in lieu of single-station or multiple-station smoke alarms.

55.2.2.6.2 Smoke alarms, other than battery-operated devices as permitted by other sections of this *Code*, or battery-operated devices complying with 55.2.1.2 and the low-power wireless system requirements of *NFPA 72*, shall receive their operating power from the building electrical system.

55.2.2.6.3* Where two or more smoke alarms are required within a dwelling unit, suite of rooms, or similar area, they shall be arranged so that operation of any smoke alarm shall cause the alarm in all smoke alarms within the dwelling unit, suite of rooms, or similar area to sound, unless otherwise permitted by another section of this *Code*, or unless the configuration provides equivalent distribution of the alarm signal.

55.2.2.6.4 The alarms described in 55.2.2.6.3 shall sound only within an individual dwelling unit, suite of rooms, or similar area and shall not actuate the building fire alarm system, unless otherwise permitted by the authority having jurisdiction.

55.2.2.6.5 Smoke alarms shall be permitted to be connected to the building fire alarm system to provide remote annunciation.

55.2.3 Occupant Notification.

55.2.3.1 Occupant notification shall be provided to alert occupants of fire or other emergency where required by other sections of this *Code*.

55.2.3.2 Occupant notification shall be in accordance with 55.2.3.3 through 55.2.3.8.2, unless otherwise provided in 55.2.3.2.1 through 55.2.3.2.4.

55.2.3.2.1 Elevator lobby, hoistway, and associated machine room smoke detectors used solely for elevator recall, and heat detectors used solely for elevator power shutdown, shall not be required to activate the building evacuation alarm if the power supply and installation wiring to these detectors are monitored by the building fire alarm system, and the activation of

Copyright National Fire Protection Association
Provided by IHS under license with NFPA
No reproduction or networking permitted without license from IHS
Not for Resale

these detectors initiates a supervisory signal at a constantly attended location.

55.2.3.2.2 Smoke detectors used solely for closing dampers or heating, ventilating, and air-conditioning system shutdown shall not be required to activate the building evacuation alarm, provided that the power supply and installation wiring to the detectors are monitored by the building fire alarm system, and the activation of the detectors initiates a supervisory signal at a constantly attended location.

55.2.3.2.3 Smoke detectors located at doors for the exclusive operation of automatic door release shall not be required to activate the building evacuation alarm, provided that the power supply and installation wiring to the detectors are monitored by the building fire alarm system, and the activation of the detectors initiates a supervisory signal at a constantly attended location.

55.2.3.2.4 Detectors in accordance with 21.3.4.3.1(B) shall not be required to activate the building evacuation alarm.

55.2.3.3 Where permitted by Chapters 16 through 30, a presignal system shall be permitted where the initial fire alarm signal is automatically transmitted without delay to a municipal fire department, a fire brigade (if provided), and an onsite staff person trained to respond to a fire emergency.

55.2.3.4 Where permitted by Chapters 16 through 30, a positive alarm sequence shall be permitted, provided that it is in accordance with *NFPA 72*.

55.2.3.5 Unless otherwise provided in 55.2.3.5.1 through 55.2.3.5.4, notification signals for occupants to evacuate shall be by audible and visible signals in accordance with *NFPA 72* and ICC/ANSI A117.1, *American National Standard for Accessible and Usable Buildings and Facilities*, or other means of notification acceptable to the authority having jurisdiction.

55.2.3.5.1 Visible-only signals shall be provided where specifically permitted in health care occupancies in accordance with Chapter 19.

55.2.3.5.2 Visible signals shall not be required in lodging or rooming houses in accordance with Chapter 23.

55.2.3.5.3 Visible signals shall not be required in exit stair enclosures.

55.2.3.5.4 Visible signals shall not be required in elevator cars.

55.2.3.6 The general evacuation alarm signal shall operate in accordance with one of the methods prescribed by 55.2.3.6.1 through 55.2.3.6.4.

55.2.3.6.1 The general evacuation alarm signal shall operate throughout the entire building other than the locations described in 55.2.3.6.5 and 55.2.3.6.6.

55.2.3.6.2* Where total evacuation of occupants is impractical due to building configuration, only the occupants in the affected zones shall be initially notified, and provisions shall be made to selectively notify occupants in other zones to afford orderly evacuation of the entire building when approved by the authority having jurisdiction.

55.2.3.6.3 Where occupants are incapable of evacuating themselves because of age, physical or mental disabilities, or physical restraint, the following shall apply:

(1) The private operating mode as described in Chapter 4 of *NFPA 72* shall be permitted to be used.
(2) Only the attendants and other personnel required to evacuate occupants from a zone, area, floor, or building shall be required to be notified.
(3) Notification of personnel as specified in 55.2.3.6.3(2) shall include means to readily identify the zone, area, floor, or building in need of evacuation.

55.2.3.6.4 In mall buildings complying with Chapter 27, notification within the covered mall shall be permitted in accordance with 27.4.4.10.3.1.

55.2.3.6.5 The general evacuation signal shall not be required to operate in exit stair enclosures.

55.2.3.6.6 The general evacuation signal shall not be required to operate in elevator cars.

55.2.3.7 Alarm notification appliances and notification appliance circuits shall comply with the requirements of *NFPA 72*.

• **55.2.3.8** Unless otherwise permitted by another section of this *Code*, audible and visible fire alarm notification appliances shall comply with either 55.2.3.8.1 or 55.2.3.8.2.

55.2.3.8.1 Audible and visible fire alarm notification appliances shall be used only for fire alarm system or other emergency purposes.

55.2.3.8.2 Voice communication systems shall be permitted to be used for other purposes, subject to the approval of the authority having jurisdiction, when installed and operated in accordance with *NFPA 72*.

• **55.2.4 Emergency Forces Notification.**

55.2.4.1 Where required by another section of this *Code*, emergency forces notification shall be provided to alert the municipal fire department and fire brigade (if provided) of fire or other emergency.

55.2.4.2 Where fire department notification is required by another section of this *Code*, the fire alarm system shall be arranged to transmit the alarm automatically via any of the following means acceptable to the authority having jurisdiction and shall be in accordance with *NFPA 72*:

(1) Auxiliary fire alarm system
(2) Central station fire alarm system
(3) Proprietary supervising station fire alarm system
(4) Remote supervising station fire alarm system

55.2.4.3* Where fire alarm systems are required to provide emergency forces notification, supervisory signals and trouble signals shall sound and be visibly displayed either at an approved, remotely located receiving facility or at a location within the protected building that is constantly attended by qualified personnel.

55.2.5 Fire Safety Functions.

55.2.5.1 Fire safety functions shall be installed in accordance with the requirements of *NFPA 72*.

55.2.5.2 Where required by another section of this *Code*, the following functions shall be actuated:

(1) Release of hold-open devices for doors or other opening protectives
(2) Stairwell or elevator shaft pressurization
(3) Smoke management or smoke control systems
(4) Unlocking of doors
(5) Elevator recall and shutdown

Copyright National Fire Protection Association
Provided by IHS under license with NFPA
No reproduction or networking permitted without license from IHS
Not for Resale

55.2.6 Location of Controls. Operator controls, alarm indicators, and manual communications capability shall be installed at a convenient location acceptable to the authority having jurisdiction.

55.2.7 Annunciation. Where annunciation is required by another section of this *Code*, it shall comply with the requirements of *NFPA 72*.

55.2.8 Annunciation Zoning.

55.2.8.1 For the purposes of alarm annunciation, each floor of the building shall be considered as not less than one zone, unless otherwise permitted by 55.2.8.5, 55.2.8.6, or another section of this *Code*.

55.2.8.2 If a floor area exceeds 22,500 ft^2 (2090 m^2), additional fire alarm zoning shall be provided, and the length of any single fire alarm zone shall not exceed 300 ft (91 m) in any direction, except as provided in 55.2.8.3 through 55.2.8.6, unless modified by another section of this *Code*.

55.2.8.3 Where permitted by another section of this *Code*, alarm zones shall be permitted to exceed 22,500 ft^2 (2090 m^2), and the length of a zone shall be permitted to exceed 300 ft (91 m) in any direction.

55.2.8.4 Where the building is protected by an automatic sprinkler system in accordance with 55.3.1.1(1), the area of the fire alarm zone shall be permitted to coincide with the area of the sprinkler system.

55.2.8.5 Where the building is protected by an automatic sprinkler system in accordance with 55.3.1.1(2), the sprinkler system shall be permitted to be annunciated on the fire alarm system as a single zone.

55.2.8.6 Where the building is protected by an automatic sprinkler system in accordance with 55.3.1.1(3), the sprinkler system shall be permitted to be annunciated on the fire alarm system as a single zone.

55.2.8.7 A system trouble signal shall be annunciated by means of audible and visible indicators. The system trouble signal shall be permitted to be annunciated as a single zone.

55.2.8.8 A system supervisory signal shall be annunciated by means of audible and visible indicators. The system supervisory signal shall be permitted to be annunciated as a single zone.

55.2.8.9 Where the system serves more than one building, each building shall be annunciated as a separate zone.

55.2.8.10 Where permitted by another section of this *Code*, the alarm zone shall be permitted to coincide with the permitted area for smoke compartments.

55.3 Automatic Sprinklers.

55.3.1 General.

55.3.1.1* Each automatic sprinkler system required by another section of this *Code* shall be in accordance with one of the following:

(1) NFPA 13, *Standard for the Installation of Sprinkler Systems*
(2) NFPA 13R, *Standard for the Installation of Sprinkler Systems in Residential Occupancies up to and Including Four Stories in Height*
(3) NFPA 13D, *Standard for the Installation of Sprinkler Systems in One- and Two-Family Dwellings and Manufactured Homes*

55.3.1.2 Sprinkler piping serving not more than six sprinklers for any isolated hazardous area shall be permitted to be connected directly to a domestic water supply system having a capacity to provide at least 0.15 gpm/ft^2 (6.1 mm/min) of floor area throughout the entire enclosed area.

55.3.1.3 Sprinkler piping serving isolated hazardous areas as described in 55.3.1.2 shall be provided with an indicating shutoff valve supervised in accordance with 55.3.2 or 55.3.3 and installed in an accessible, visible location between the sprinklers and the connection to the domestic water supply.

55.3.1.4* In areas protected by automatic sprinklers, automatic heat-detection devices required by other sections of this *Code* shall not be required.

55.3.1.5 Automatic sprinkler systems installed to make use of an alternative permitted by this *Code* shall be considered required systems and shall meet the provisions of this *Code* that apply to required systems.

55.3.1.6 In buildings of more than four stories, a sprinkler control valve and a waterflow device shall be provided for each floor.

55.3.1.7 Basements exceeding 2500 ft^2 (232 m^2) in new buildings shall be protected throughout by an approved automatic sprinkler system. [**1:**13.3.2.2]

55.3.2 Electrical Supervision.

55.3.2.1* Supervisory Signals. Where electrically supervised automatic sprinkler systems are required by another section of this *Code*, supervisory attachments shall be installed and monitored for integrity in accordance with *NFPA 72*, and a distinctive supervisory signal shall be provided to indicate a condition that would impair the satisfactory operation of the sprinkler system.

55.3.2.1.1 Monitoring shall include, but shall not be limited to, monitoring of control valves, fire pump power supplies and running conditions, water tank levels and temperatures, tank pressure, and air pressure on dry-pipe valves.

55.3.2.1.2 Supervisory signals shall sound and shall be displayed either at a location within the protected building that is constantly attended by qualified personnel or at an approved, remotely located receiving facility.

55.3.2.2 Alarm Signal Transmission.

55.3.2.2.1 Where electrical supervision of automatic sprinkler systems is required by another section of this *Code*, waterflow alarms shall be transmitted to an approved, proprietary alarm-receiving facility, a remote station, a central station, or the fire department.

55.3.2.2.2 The connection described in 55.3.2.2.1 shall be in accordance with 55.2.1.2.

55.3.3 Other Supervision. Where electrical supervision is not required by another section of this *Code*, supervision shall be permitted in accordance with NFPA 13.

55.4 Standpipe Systems.

55.4.1 New buildings shall be equipped with a Class I standpipe system installed in accordance with NFPA 14, *Standard for the Installation of Standpipe and Hose Systems*, where any of the following conditions exist:

(1) The building is more than three stories above grade.

Copyright National Fire Protection Association
Provided by IHS under license with NFPA
No reproduction or networking permitted without license from IHS
Not for Resale

(2) The building is more than 50 ft (15 m) above grade and contains intermediate stories or balconies.
(3) The building is more than one story below grade.
(4) The building is more than 20 ft (6100 mm) below grade.

55.4.2 Where required by another section of this *Code*, Class II and Class III standpipe systems shall be in accordance with NFPA 14.

55.4.3 Where standpipe and hose systems are installed in combination with automatic sprinkler systems, installation shall be in accordance with NFPA 13 and NFPA 14.

55.5 Other Automatic Extinguishing Equipment.

55.5.1 Alternative Systems. In any occupancy where the character of the fuel for fire is such that extinguishment or control of the fire is accomplished by a type of automatic extinguishing system in lieu of an automatic sprinkler system, such extinguishing system shall be installed in accordance with the applicable standard referenced in Table 55.5.1.

Table 55.5.1 Fire Suppression System Installation Standards

Fire Suppression System	Installation Standard
Low-, medium-, and high-expansion foam systems	NFPA 11, *Standard for Low-, Medium-, and High-Expansion Foam Systems*
Carbon dioxide systems	NFPA 12, *Standard on Carbon Dioxide Extinguishing Systems*
Halon 1301 systems	NFPA 12A, *Standard on Halon 1301 Fire Extinguishing Systems*
Water spray fixed systems	NFPA 15, *Standard for Water Spray Fixed Systems for Fire Protection*
Deluge foam-water sprinkler systems	NFPA 16, *Standard for the Installation of Foam-Water Sprinkler and Foam-Water Spray Systems*
Dry chemical systems	NFPA 17, *Standard for Dry Chemical Extinguishing Systems*
Wet chemical systems	NFPA 17A, *Standard for Wet Chemical Extinguishing Systems*
Water mist systems	NFPA 750, *Standard on Water Mist Fire Protection Systems*
Clean agent extinguishing systems	NFPA 2001, *Standard on Clean Agent Fire Extinguishing Systems*

55.5.2 Alarm Activation.

55.5.2.1 If the extinguishing system is installed in lieu of a required, electrically supervised automatic sprinkler system, the activation of the extinguishing system shall activate the building fire alarm system, where provided.

55.5.2.2 The actuation of an extinguishing system that is not installed in lieu of a required, electrically supervised automatic sprinkler system shall be indicated at the building fire alarm system, where provided.

55.5.3 Construction Alternatives. Construction alternatives for automatic sprinkler systems shall not be permitted for those portions of buildings protected by alternative extinguishing systems, unless equivalency is demonstrated in accordance with Section 1.5.

55.6 Portable Fire Extinguishers. Where required by another section of this *Code*, portable fire extinguishers shall be installed, inspected, and maintained in accordance with NFPA 10, *Standard for Portable Fire Extinguishers*.

55.7 Smoke Control.

55.7.1* Installation. Where required by another section of this *Code*, smoke control systems shall be designed and installed in accordance with NFPA 92A, *Standard for Smoke-Control Systems Utilizing Barriers and Pressure Differences*, or NFPA 92B, *Standard for Smoke Management Systems in Malls, Atria, and Large Spaces*, or nationally recognized standards, engineering guides, or recommended practices, as approved by the authority having jurisdiction.

55.7.2 System Design. The engineer of record shall clearly identify the intent of the system, the design method used, the appropriateness of that method, and the required means of inspecting, testing, and maintaining the system.

55.7.3 Smoke Control System Operation.

55.7.3.1 Floor- or zone-dependent smoke control systems shall be automatically activated by sprinkler waterflow or smoke detection systems.

55.7.3.2 Means for manual operation of smoke control systems shall be provided at an approved location.

55.7.4 Acceptance Testing. Acceptance testing shall be performed by a special inspector in accordance with Section 55.11.

55.8 Fire Hydrants. Where required by another section of this *Code* and NFPA 1, *Uniform Fire Code*, fire hydrants shall be installed in accordance with NFPA 24, *Standard for the Installation of Private Fire Service Mains and Their Appurtenances*.

55.9 Private Fire Service Mains. Private fire service mains that provide fire protection water to a site shall be in accordance with NFPA 24.

55.10 Protection of Cooking Hazards. Where required by another section of this *Code*, commercial cooking operations shall be protected in accordance with NFPA 96, *Standard for Ventilation Control and Fire Protection of Commercial Cooking Operations*.

55.11 Special Inspections and Tests.

55.11.1 System Verification. When required by another section of this *Code*, special inspections and tests shall be performed to verify the operation of the fire protection system in its final condition for acceptance by the authority having jurisdiction.

55.11.2 Experience. The special inspector's relevant experience in the design, installation, and testing of the fire protection systems shall be documented.

55.11.3 Documentation. The design documents shall provide the procedures and methods to be used and items subject to special inspections and tests.

55.11.4 Report. The special inspector shall submit an inspection and test report to the authority having jurisdiction and registered design professional in responsible charge.

Copyright National Fire Protection Association
Provided by IHS under license with NFPA
No reproduction or networking permitted without license from IHS
Not for Resale

Annex A Explanatory Material

Annex A is not a part of the requirements of this NFPA document but is included for informational purposes only. This annex contains explanatory material, numbered to correspond with the applicable text paragraphs.

A.1.1 The *Code* does not address features that solely affect economic loss to private property.

A.1.2 It is not the purpose of the *Code* to provide design regulations that solely affect economic loss to private property.

A.1.7.5.3.1.1(10) The term *structurally unsafe* is defined in 3.3.600, and the condition is determined by performing an evaluation in accordance with 15.1.5.

A.1.7.6.6.3.4(C) In order to complete the elevation certificate, additional subsequent inspections might be required to determine the lowest elevation of machinery or equipment servicing the building, adjacent grade elevations, and floor opening information.

A.3.2.1 Approved. The National Fire Protection Association does not approve, inspect, or certify any installations, procedures, equipment, or materials; nor does it approve or evaluate testing laboratories. In determining the acceptability of installations, procedures, equipment, or materials, the authority having jurisdiction may base acceptance on compliance with NFPA or other appropriate standards. In the absence of such standards, said authority may require evidence of proper installation, procedure, or use. The authority having jurisdiction may also refer to the listings or labeling practices of an organization that is concerned with product evaluations and is thus in a position to determine compliance with appropriate standards for the current production of listed items.

A.3.2.2 Authority Having Jurisdiction (AHJ). The phrase "authority having jurisdiction," or its acronym AHJ, is used in NFPA documents in a broad manner, since jurisdictions and approval agencies vary, as do their responsibilities. Where public safety is primary, the authority having jurisdiction may be a federal, state, local, or other regional department or individual such as a fire chief; fire marshal; chief of a fire prevention bureau, labor department, or health department; building official; electrical inspector; or others having statutory authority. For insurance purposes, an insurance inspection department, rating bureau, or other insurance company representative may be the authority having jurisdiction. In many circumstances, the property owner or his or her designated agent assumes the role of the authority having jurisdiction; at government installations, the commanding officer or departmental official may be the authority having jurisdiction.

A.3.2.3 Code. The decision to designate a standard as a "code" is based on such factors as the size and scope of the document, its intended use and form of adoption, and whether it contains substantial enforcement and administrative provisions.

A.3.2.5 Listed. The means for identifying listed equipment may vary for each organization concerned with product evaluation; some organizations do not recognize equipment as listed unless it is also labeled. The authority having jurisdiction should utilize the system employed by the listing organization to identify a listed product.

A.3.3.9 Actuating Member or Bar. The active surface of the actuating bar needs to be visually and physically distinct from the rest of the device. The actuating bar is also called a cross bar or push pad.

A.3.3.21 Aisle. An aisle might be bounded on one side only, but not both sides, by partitions of ceiling height or higher located along the path of travel. Typically, aisles are bordered by seating, furniture, or partitions of less than ceiling height.

A.3.3.22 Aisle Accessway. *Aisle accessway* is the term used for the previously unnamed means of egress component leading to an aisle or other means of egress. For example, circulation space between parallel rows of seats having a width of 12 in. to 24 in. (305 mm to 610 mm) and a length not exceeding 100 ft (30 m) is an aisle accessway. Some of the circulation space between tables or seats in restaurants might be considered aisle accessway.

Depending on the width of aisle accessway, which is influenced by its length and expected utilization, the movement of a person through the aisle accessway might require others to change their individual speed of movement, alter their postures, move their chairs out of the way, or proceed ahead of the person.

A.3.3.26.2 Alteration (Accessibility). Alterations include, but are not limited to, remodeling, renovation, rehabilitation, reconstruction, historic restoration, resurfacing of circulation paths or vehicular ways, changes or rearrangement of the structural parts or elements, and changes or rearrangement in the plan configuration of walls and full-height partitions. Normal maintenance, reroofing, painting or wallpapering, or changes to electrical systems are not alterations unless they affect the usability of the building or facility.

A.3.3.33.5 Fabrication Area (Fab Area). Fabrication areas are permitted to include ancillary rooms or areas such as dressing rooms and offices that are directly related to the fab area processes.

A.3.3.33.8.1 Gross Floor Area. Where the term *floor area* is used, it should be understood to be gross floor area, unless otherwise specified.

A.3.3.33.10 Hazardous Area. Hazardous areas include those areas used for the storage or use of combustibles or flammables; toxic, noxious, or corrosive materials; or heat-producing appliances.

A.3.3.33.12.1 Employee Work Area (Accessibility). Corridors, toilet rooms, kitchenettes, and break rooms are not employee work areas.

A.3.3.33.12.2 Rehabilitation Work Area. A rehabilitation work area excludes other portions of the building where incidental work entailed by the intended work must be performed and portions of the building where work not initially intended by the owner is specifically required by this *Code*.

A.3.3.34 Area of Refuge. An area of refuge has a temporary use during egress. It generally serves as a staging area that provides relative safety to its occupants while potential emergencies are assessed, decisions are made, and mitigating activities are begun. Taking refuge within such an area is, thus, a stage in the total egress process; that is, a stage between egress from the immediately threatened area and egress to a public way.

An area of refuge might be another building connected by a bridge or balcony, a compartment of a subdivided story, an elevator lobby, or an enlarged story-level exit stair landing. An area of refuge is accessible by means of horizontal travel or, as

Copyright National Fire Protection Association
Provided by IHS under license with NFPA
No reproduction or networking permitted without license from IHS
Not for Resale

a minimum, via an accessible route meeting the requirements of ICC/ANSI A117.1, *American National Standard for Accessible and Usable Buildings and Facilities*.

This *Code* recognizes any floor in a building protected throughout by an approved, supervised automatic sprinkler system as an area of refuge. This recognition acknowledges the ability of a properly designed and functioning automatic sprinkler system to control a fire at its point of origin and to limit the production of fire products.

The requirement for separated rooms or spaces can be met on an otherwise undivided floor by enclosing the elevator lobby with ordinary glass or other simple enclosing partitions that are smoke resisting.

For some occupancies, one accessible room or space is permitted.

A.3.3.41 Atrium. As defined in NFPA 92B, *Standard for Smoke Management Systems in Malls, Atria, and Large Spaces*, a large-volume space is an uncompartmented space, generally two or more stories in height, within which smoke from a fire either in the space or in a communicating space can move and accumulate without restriction. Atria and malls are examples of large-volume spaces.

A.3.3.46 Barricade. "Natural barrier" means the natural features of the ground, such as hills, or timber of sufficient density that the surrounding exposures that need protection cannot be seen from the magazine when the trees are bare of leaves. "Artificial barrier" means an artificial mound or revetted wall of earth of a minimum thickness of 36 in (915 mm).

A.3.3.47.1 Fire Barrier. A fire barrier, such as a wall or floor assembly, might be aligned vertically or horizontally.

A.3.3.47.2 Smoke Barrier. A smoke barrier, such as a wall, floor, or ceiling assembly, might be aligned vertically or horizontally. A smoke barrier might or might not have a fire resistance rating. Application of smoke barrier criteria where required elsewhere in the *Code* should be in accordance with Section 8.11.

A.3.3.47.3 Thermal Barrier. Finish ratings, as published in the UL *Fire Resistance Directory,* are one way of determining thermal barrier.

A.3.3.55 Birth Center. A birth center is a low-volume service for healthy, childbearing women, and their families, who are capable of ambulation in the event of fire or fire-threatening events. Birth center mothers and babies experience minimal analgesia, are not generally or regionally anesthetized, and are capable of ambulation, even in second-stage labor.

A.3.3.65 Buildings. The term *building* is to be understood as if followed by the words "or portions thereof" *(see also 3.3.601, Structure)*. Each portion of a building that is separated from other portions by a fire wall is considered to be a separate building. *(This annex note is not extracted from ASCE 7.)*

A.3.3.65.4 Apartment Building. The *Code* specifies that, wherever there are three or more living units in a building, the building is considered an apartment building and is required to comply with Chapter 24. Townhouse units are considered to be apartment buildings if there are three or more units in the building. The type of wall required between units in order for them to be considered separate buildings is normally established by the authority having jurisdiction. If the units are separated by a wall of sufficient fire resistance and structural integrity to be considered as separate buildings, then the provisions of Chapter 22 apply to each townhouse. Condominium status is a form of ownership, not occupancy; for example, there are condominium warehouses, condominium apartments, and condominium offices.

A.3.3.65.7 Existing Building. With respect to judging whether a building should be considered existing, the deciding factor is not when the building was designed or when construction started but, rather, the date plans were approved for construction by the appropriate authority having jurisdiction.

A.3.3.65.8 Flexible Plan and Open Plan Educational or Day-Care Building. Flexible plan buildings have movable corridor walls and movable partitions of full-height construction, with doors leading from rooms to corridors. Open plan buildings have rooms and corridors delineated by tables, chairs, desks, bookcases, counters, low-height partitions, or similar furnishings. It is the intent that low-height partitions not exceed 60 in. (1525 mm).

A.3.3.65.10 High-Rise Building. It is the intent of this definition that, in determining the level from which the highest occupiable floor is to be measured, the enforcing agency should exercise reasonable judgment, including consideration of overall accessibility to the building by fire department personnel and vehicular equipment. Where a building is situated on a sloping terrain and there is building access on more than one level, the enforcing agency might select the level that provides the most logical and adequate fire department access.

A.3.3.65.12 Mall Building. A mall building might enclose one or more uses, such as retail and wholesale stores, drinking and dining establishments, entertainment and amusement facilities, transportation facilities, offices, and other similar uses.

A.3.3.65.13 Mini-Storage Building. Garage units that are primarily intended for vehicular storage as part of a multifamily development are not intended to be classified as mini-storage buildings.

A.3.3.65.16 Special Amusement Building. Special amusement buildings include amusements such as a haunted house, a roller coaster–type ride within a building, a multilevel play structure within a building, a submarine ride, and similar amusements where the occupants are not in the open air.

A.3.3.105 Common Path of Travel. Common path of travel is measured in the same manner as travel distance but terminates at that point where two separate and distinct routes become available. Paths that merge are common paths of travel.

A.3.3.107.1 Fire Compartment. Additional fire compartment information is contained in 8.2.2.

In the provisions for fire compartments utilizing the outside walls of a building, it is not intended that the outside wall be specifically fire resistance rated, unless required by another section of this *Code* or by other standards. Likewise, it is not intended for outside windows or doors to be protected, unless specifically required for exposure protection by another section of this *Code* or by other standards.

A.3.3.107.2 Smoke Compartment. In the provisions for smoke compartments using the outside walls or the roof of a building, it is not intended that outside walls or roofs, or any openings therein, are to be capable of resisting the passage of smoke.

Copyright National Fire Protection Association
Provided by IHS under license with NFPA
No reproduction or networking permitted without license from IHS
Not for Resale

A.3.3.115.1.1 Actual Start of Construction (Flood Resistance). The actual start of construction means the first placement of permanent construction of a building (including a manufactured home) on a site, such as the pouring of a slab or footings, installation of pilings, or construction of columns. Permanent construction does not include land preparation (such as clearing, excavation, grading, or filling); the installation of streets and walkways; the excavation for a basement, footings, piers, or foundations; the erection of temporary forms; or the installation of accessory buildings, such as garages or sheds not occupied as dwelling units and not part of the main building. For a substantial improvement, the actual start of construction means the first alteration of any wall, ceiling, floor, or other structural part of the building, whether or not that alteration affects the exterior dimensions of the building.

A.3.3.116 Construction Documents. Quality assurance plans might be required by Chapter 40.

A.3.3.128 Critical Radiant Flux. Critical radiant flux is the property determined by the test procedure of NFPA 253, *Standard Method of Test for Critical Radiant Flux of Floor Covering Systems Using a Radiant Heat Energy Source*. The unit of measurement of critical radiant flux is watts per square centimeter (W/cm^2).

A.3.3.133.3 Fire Damper. Fire dampers are classified for use in either static systems that will automatically shut down in the event of a fire, or in dynamic systems that operate in the event of a fire. A dynamic fire damper is tested and rated for closure under airflow.

A.3.3.146.2 Proposed Design. The design team might develop a number of trial designs that will be evaluated to determine if they meet the performance criteria. One of the trial designs will be selected from those that meet the performance criteria for submission to the authority having jurisdiction as the proposed design.

The proposed design is not necessarily limited to fire protection systems and building features. It also includes any component of the proposed design that is installed, established, or maintained for the purpose of life safety without which the proposed design could fail to achieve specified performance criteria. Therefore, the proposed design often includes emergency procedures and organizational structures that are needed to meet the performance criteria specified for the proposed design.

A.3.3.159 Development. The man-made changes might include, but are not limited to, the erection of buildings or other structures; the temporary or permanent storage of materials; and mining, dredging, filling, grading, paving, excavation, drilling, or other land-disturbing activities.

A.3.3.160.2 Special Industrial Explosive Device (SIED). The term *special industrial explosive device* includes, but is not limited to, explosive rivets; explosive bolts; explosive charges for driving pins or studs; cartridges for explosive-actuated power tools; and charges of explosives used in automotive airbag inflators, jet tapping of open hearth furnaces, and jet perforation of oil well casings.

A.3.3.160.3 Stair Descent Device. A stair descent device typically requires the assistance of a trained operator.

A.3.3.165 Dormitory. Rooms within dormitories intended for the use of individuals for combined living and sleeping purposes are guest rooms or guest suites. Examples of dormitories are college dormitories, fraternity and sorority houses, and military barracks.

A.3.3.173 Electroluminescent. The light source is typically contained inside the device.

A.3.3.182.1 Exhausted Enclosure. Exhausted enclosures include laboratory hoods, exhaust fume hoods, and similar appliances and equipment used to locally retain and exhaust the gases, fumes, vapors, and mists that could be released. Rooms or areas provided with general ventilation, in themselves, are not exhausted enclosures.

A.3.3.182.2 Smokeproof Enclosure. For further guidance, see the following publications:

(1) ASHRAE *Handbook of Fundamentals*
(2) *Design of Smoke Management Systems*, by Klote and Milke
(3) NFPA 105, *Standard for the Installation of Smoke Door Assemblies*

A.3.3.185 Equipment or Fixture. Equipment or fixtures do not include manufacturing, production, or process equipment, but do include connections from building service to process equipment.

A.3.3.192 Existing. See A.3.3.65.7, *Existing Building*.

A.3.3.195 Exit. Exits include exterior exit doors, exit passageways, horizontal exits, exit stairs, and exit ramps. In the case of a stairway, the exit includes the following:

(1) Stair enclosure
(2) Door to the stair enclosure
(3) Stairs and landings inside the enclosure
(4) Door from the stair enclosure to the outside or to the level of exit discharge
(5) Any exit passageway and its associated doors, if such are provided, so as to discharge the stair directly to the outside. In the case of a door leading directly from the street floor to the street or open air, the exit comprises only the door.

Doors of small individual rooms, as in hotels, while constituting exit access from the room, are not referred to as exits, except where they lead directly to the outside of the building from the street floor.

A.3.3.195.1 Horizontal Exit. Horizontal exits should not be confused with egress through doors in smoke barriers. Doors in smoke barriers are designed only for temporary protection against smoke, whereas horizontal exits provide protection against serious fire for a relatively long period of time in addition to providing immediate protection from smoke. *(See 11.2.4.)*

A.3.3.199 Exposure Fire. An exposure fire usually refers to a fire that starts outside a building, such as a wildlands fire or vehicle fire, and that consequently exposes the building to a fire.

A.3.3.204.6 Limited Care Facility. Limited care facilities and residential board and care occupancies both provide care to people with physical and mental limitations. However, the goals and programs of the two types of occupancies differ greatly. The requirements in this *Code* for limited care facilities are based on the assumption that these are medical facilities, that they provide medical care and treatment, and that the patients are not trained to respond to the fire alarm; that is, the patients do not participate in fire drills but, rather, they await rescue. The requirements for residential board and care

Copyright National Fire Protection Association
Provided by IHS under license with NFPA
No reproduction or networking permitted without license from IHS
Not for Resale

occupancies are based on the assumption that the residents are provided with personal care and activities that foster continued independence, that the residents are encouraged and taught to overcome their limitations, and that most residents are trained to respond to fire drills, to the extent they are able.

A.3.3.210 Fiberboard. The lignocellulosic fibers are usually wood or cane.

A.3.3.211.2 Interior Finish. Interior finish is not intended to apply to surfaces within spaces, such as those that are concealed or inaccessible. Furnishings that, in some cases, might be secured in place for functional reasons should not be considered as interior finish.

A.3.3.211.3 Interior Floor Finish. Interior floor finish includes coverings applied over a normal finished floor or stair treads and risers.

A.3.3.220 Fire Model. Due to the complex nature of the principles involved, calculative models are often packaged as computer software to perform the complex calculations.

A.3.3.224 Fire Scenario. A fire scenario defines the conditions under which a proposed design is expected to meet the fire safety goals. Factors typically include fuel characteristics, ignition sources, ventilation, building characteristics, and occupant locations and characteristics. The term *fire scenario* includes more than the characteristics of the fire itself but excludes design specifications and any characteristics that do not vary from one fire to another, the latter of which are called assumptions. The use of the term *fire scenario* in this *Code* refers only to those specifications required to calculate the fire's development and effects but, in other contexts, the term might be used to mean both the initial specifications and the subsequent development and effects (that is, a complete description of fire from conditions prior to ignition to conditions following extinguishment).

A.3.3.231 Fireworks. The regulations referred to limit the explosive content of each toy cap to not more than an average of 0.25 gr (16.2 mg). Also, each package containing such caps has to be labeled to indicate the maximum explosive content per cap. For information on the use of model rockets and model rocket motors, see NFPA 1122, *Code for Model Rocketry.*

A.3.3.231.1 Consumer Fireworks, 1.4G. Consumer Fireworks 1.4G contain limited quantities of pyrotechnic composition per unit and do not pose a mass explosion hazard where stored. Therefore, they are not required to be stored in a magazine.

Consumer Fireworks 1.4G are normally classed as Explosive 1.4G and described as Fireworks UN0336 by the U.S. Department of Transportation (U.S. DOT). *(See Annex C of* NFPA 1124, *Code for the Manufacture, Transportation, Storage, and Retail Sales of Fireworks and Pyrotechnic Articles.)*

A.3.3.231.2 Display Fireworks, 1.3G. Display Fireworks 1.3G are described as Fireworks UN0335 and classed as Explosive 1.3G by the U.S. Department of Transportation (U.S. DOT). *(See Annex C of* NFPA 1124, *Code for the Manufacture, Transportation, Storage, and Retail Sales of Fireworks and Pyrotechnic Articles.)*

A.3.3.233 Flame Spread. See 10.3.2.

A.3.3.238 Flammable Solid. Flammable solids include finely divided solid materials that, when dispersed in air as a cloud, could be ignited and cause an explosion.

A.3.3.254.2 Street Floor. Where, due to differences in street levels, there are two or more stories accessible from the street, each is a street floor. Where there is no floor level within the specified limits for a street floor above or below ground level, the building has no street floor.

A.3.3.270.1 Compressed Gas. The states of a compressed gas are categorized as follows:

(1) Nonliquefied compressed gases are gases, other than those in solution, that are in a compressed gas container under the charged pressure and are entirely gaseous at a temperature of 68°F (20°C).
(2) Liquefied compressed gases are gases that are in a compressed gas container under the charged pressure and are partially liquid at a temperature of 68°F (20°C).
(3) Compressed gases in solution are nonliquefied gases that are dissolved in a solvent.
(4) Compressed gas mixtures consist of a mixture of two or more compressed gases contained in a compressed gas container, the hazard properties of which are represented by the properties of the mixture as a whole.

A.3.3.271 Gas Cabinet. Doors and access ports for exchanging cylinders and accessing pressure-regulating controls are permitted to be included.

A.3.3.278.1 Grade (Ground Level, Flood Resistance). Note that the average of surrounding grade elevations is not used for flood-resistant design and construction. Flood provisions frequently refer to "adjacent grade," which is the grade elevation adjacent to a wall, or to "highest adjacent grade," which is the highest grade elevation adjacent to any of the walls.

A.3.3.279 Grandstand. Where the term *grandstand* is preceded by an adjective denoting a material, it refers to a grandstand, the essential members of which, exclusive of seating, are of the material designated.

A.3.3.307 Heat Release Rate (HRR). The heat release rate of a fuel is related to its chemistry, its physical form, and the availability of oxidant and is ordinarily expressed as British thermal units per second (Btu/s) or kilowatts (kW).

A.3.3.309 Heliport. The term *heliport* applies to all sites used or intended to be used for the helicopter takeoff and landing.

A.3.3.320.1 Day-Care Home. A day-care home is generally located within a dwelling unit.

A.3.3.324 Hot Tub. A hot tub is distinct from a spa unit formed of plastic, concrete, metal, or other materials.

A.3.3.325 Hotel. So-called apartment hotels should be classified as hotels because they are potentially subject to the same transient occupancy as hotels. Transients are those who occupy accommodations for less than 30 days.

A.3.3.327.1 Externally Illuminated. The light source is typically a dedicated incandescent or fluorescent source.

A.3.3.327.2 Internally Illuminated. The light source is typically incandescent, fluorescent, electroluminescent, photoluminescent, light-emitting diodes, or self-luminescent.

A.3.3.354.1 Ceiling Limit. The ceiling limits utilized are to be those published in 29 CFR 1910.1000.

A.3.3.354.2 Lower Flammable Limit (LFL). The LFL is also referred to as the *lower explosive limit.* Mixtures below this limit are said to be lean.

Copyright National Fire Protection Association
Provided by IHS under license with NFPA
No reproduction or networking permitted without license from IHS
Not for Resale

A.3.3.354.3 Permissible Exposure Limit (PEL). The maximum permitted time-weighted average exposures to be utilized are those published in 29 CFR 1910.1000.

A.3.3.360.1 Combustible Liquid. The category of combustible liquids does not include compressed gases or cryogenic fluids. Classification of combustible liquids is as follows:

(1) Class II—liquids having closed-cup flash points at or above 100°F (37.8°C) and below 140°F (60°C)
(2) Class IIIA—liquids having closed-cup flash points at or above 140°F (60°C) and below 200°F (93°C)
(3) Class IIIB—liquids having closed-cup flash points at or above 200°F (93°C)

A.3.3.360.2 Flammable Liquid. Flammable liquids do not include compressed gases or cryogenic fluids. Flammable liquids are further categorized into a group known as Class I liquids. The Class I category is subdivided as follows:

(1) Class I-A liquids are those having a flash point below 73°F (22.8°C) and a boiling point below 100°F (37.8°C).
(2) Class I-B liquids are those having a flash point below 73°F (22.8°C) and a boiling point at or above 100°F (37.8°C).
(3) Class I-C liquids are those having a flash point at or above 73°F (22.8°C) and below 100°F (37.8°C).

A.3.3.367.3 Fuel Load. Fuel load includes interior finish and trim.

A.3.3.388.2 Corrosive Material. A chemical is considered to be corrosive if, when tested on the intact skin of albino rabbits by the method described in Appendix A to CFR 49, Part 173, it destroys or changes irreversibly the structure of the tissue at the site of contact following an exposure period of 4 hours. The term *corrosive material* does not refer to action on inanimate surfaces.

A.3.3.388.3 Explosive Material. The term *explosive material* includes, but is not limited to, dynamite, Black Powder, pellet powder, initiating explosives, detonators, safety fuses, squibs, detonating cord, igniter cord, igniters, and Display Fireworks 1.3G (Class B, Special). The term *explosive* includes any material determined to be within the scope of Title 18, United States Code, Chapter 40, and also includes any material classified as an explosive, other than Consumer Fireworks 1.4G (Class C, Common), by the Hazardous Materials Regulations of the U.S. Department of Transportation (DOT) in 49 CFR.

The former classification system used by the DOT included the terms *high explosive* and *low explosive*, as further defined in A.3.3.388.3.2. These terms remain in use by the U.S. Bureau of Alcohol Tobacco and Firearms (BATF). Explosive materials classified as hazard Class 1 are further defined under the current system applied by DOT. Compatibility group letters are used in concert with division numbers to specify further limitations on each division noted. For example, the letter G (as in 1.4G) identifies substances or articles that contain a pyrotechnic substance and similar materials. UN/DOT Class 1 Explosives are defined as follows:

(1) Division 1.1 explosives are explosives that are a mass explosion hazard, which is a hazard that instantaneously affects almost the entire load.
(2) Division 1.2 explosives are explosives that are a projection hazard but not a mass explosion hazard.
(3) Division 1.3 explosives are explosives that are a fire hazard and either a minor blast hazard or a minor projection hazard, or both, but not a mass explosion hazard.
(4) Division 1.4 explosives are explosives that pose a minor explosion hazard and meet both of the following criteria:
   (a) The explosive effects are largely confined to the package, and no projection of fragments of appreciable size or range is to be expected.
   (b) An external fire cannot cause virtually instantaneous explosion of almost the entire contents of the package.
(5) Division 1.5 explosives are very insensitive explosives that are comprised of substances that are a mass explosion hazard, but are so insensitive that there is very little probability of initiation or of transition from burning to detonation under normal conditions of transport.
(6) Division 1.6 explosives are extremely insensitive articles that are not a mass explosion hazard, that are comprised of articles that contain only extremely insensitive detonating substances, and that demonstrate a negligible probability of accidental initiation or propagation.

A.3.3.388.3.2 Low Explosive (Material). A low explosive material is characterized by a reaction rate that is less than the speed of sound. Examples of low explosives are Black Powder, safety fuses, igniters, igniter cords, fuse lighters, Fireworks 1.3G (Class B, Special), and propellants 1.3C (Class B, Solid Propellants).

A.3.3.388.9 Limited-Combustible (Material). Material subject to increase in combustibility or flame spread index beyond the limits herein established through the effects of age, moisture, or other atmospheric condition is considered combustible. See NFPA 259, *Standard Test Method for Potential Heat of Building Materials*, and NFPA 220, *Standard on Types of Building Construction*. Where the term *limited-combustible* is used in this *Code*, it is also intended to include the term *noncombustible*.

A.3.3.388.16 Thermoplastic Material. Examples of thermoplastic materials include polystyrene, polycarbonate, polymethylmethacrylate, polyethylene, and some formulations of polyvinyl chloride.

A.3.3.388.17 Thermoset Material. Examples of thermoset materials include polyurethane, polyisocyanurate, fiber-reinforced plastic, phenolic foam, and melamine.

A.3.3.388.18.1 Highly Toxic Material. Mixtures of highly toxic materials with ordinary materials, such as water, might not warrant classification as highly toxic. While categorization is basically simple in application, any hazard evaluation that is required for the precise categorization of highly toxic material is required to be performed by experienced, technically competent persons.

A.3.3.388.19 Unstable (Reactive) Material. Unstable (reactive) material is classified as follows:

(1) Class 4 unstable (reactive) materials are those that, in themselves, are readily capable of detonation, explosive decomposition, or explosive reaction at normal temperatures and pressures and include, among others, materials that are sensitive to localized thermal or mechanical shock at normal temperatures and pressures.
(2) Class 3 unstable (reactive) materials are those that, in themselves, are capable of detonation, explosive decomposition, or explosive reaction, but that require a strong initiating source or that must be heated under confinement before initiation, and include, among others, materials that are sensitive to thermal or mechanical shock at elevated temperatures and pressures.

Copyright National Fire Protection Association
Provided by IHS under license with NFPA
No reproduction or networking permitted without license from IHS
Not for Resale

(3) Class 2 unstable (reactive) materials are those that readily undergo violent chemical change at elevated temperatures and pressures and include, among others, materials that exhibit an exotherm at temperatures less than or equal to 30°F (−1°C) when tested by differential scanning calorimetry.
(4) Class 1 unstable (reactive) materials are those that, in themselves, are normally stable, but that can become unstable at elevated temperatures and pressures and include among others, materials that change or decompose on exposure to air, light, or moisture and that exhibit an exotherm at temperatures greater than 30°F (−1°C), but less than or equal to 57°F (14°C), when tested by differential scanning calorimetry.

A.3.3.388.20 Water-Reactive Material. Water-reactive materials are subdivided as follows:

(1) Class 3 materials are those that react explosively with water without requiring heat or confinement.
(2) Class 2 materials are those that might form potentially explosive mixtures with water.
(3) Class 1 materials are those that might react with water with some release of energy, but not violently.

A.3.3.389 Materials and Methods Requirements. Applicable codes include this *Code*, *Mechanical Code*, *Plumbing Code*, *Fire Code*, *Electrical Code*, *Boiler Safety Code*, *Energy Code*, *Elevator Code*, and *Accessibility Code*. The required quantity, fire resistance, flame spread, acoustic or thermal performance, and other performance attributes are excluded from materials and methods requirements.

A.3.3.391 Means of Egress. A means of egress comprises the vertical and horizontal travel and includes intervening room spaces, doorways, hallways, corridors, passageways, balconies, ramps, stairs, elevators, enclosures, lobbies, escalators, horizontal exits, courts, and yards.

A.3.3.393 Membrane. For the purpose of fire protection features, a membrane can consist of materials such as gypsum board, plywood, glass, or fabric. For the purpose of membrane structures, a membrane consists of thin, flexible, water-impervious material capable of being supported by an air pressure of 1½ in. (38 mm) water column.

A.3.3.410.1 Nominal Dimension (Masonry). Nominal dimensions are usually stated in whole numbers. Thickness is given first, followed by height and, then, length.

A.3.3.423 Objective. Objectives define a series of actions necessary to make the achievement of a goal more likely. Objectives are stated in more specific terms than goals and are measured on a more quantitative, rather than qualitative, basis.

A.3.3.424.1 Assembly Occupancy. Assembly occupancies might include the following:

(1) Armories
(2) Assembly halls
(3) Auditoriums
(4) Bowling lanes
(5) Club rooms
(6) College and university classrooms, 50 persons and over
(7) Conference rooms
(8) Courtrooms
(9) Dance halls
(10) Drinking establishments
(11) Exhibition halls
(12) Gymnasiums
(13) Libraries
(14) Mortuary chapels
(15) Motion picture theaters
(16) Museums
(17) Passenger stations and terminals of air, surface, underground, and marine public transportation facilities
(18) Places of religious worship
(19) Pool rooms
(20) Recreation piers
(21) Restaurants
(22) Skating rinks
(23) Special amusement buildings, regardless of occupant load
(24) Theaters

Assembly occupancies are characterized by the presence or potential presence of crowds with attendant panic hazard in case of fire or other emergency. They are generally open or occasionally open to the public, and the occupants, who are present voluntarily, are not ordinarily subject to discipline or control. Such buildings are ordinarily occupied by able-bodied persons and are not used for sleeping purposes. Special conference rooms, snack areas, and other areas incidental to, and under the control of, the management of other occupancies, such as offices, fall under the 50-person limitation.

Restaurants and drinking establishments with an occupant load of fewer than 50 persons should be classified as mercantile occupancies.

For special amusement buildings, see 16.4.7.

A.3.3.424.2 Business Occupancy. Business occupancies include the following:

(1) Air traffic control towers (ATCTs)
(2) Ambulatory outpatient clinics
(3) City halls
(4) College and university instructional buildings, classrooms under 50 persons, and instructional laboratories
(5) Courthouses
(6) Dentists' offices
(7) Doctors' offices
(8) General offices
(9) Town halls

Doctors' and dentists' offices are included, unless of such character as to be classified as ambulatory health care occupancies. *(See 3.3.424.6.1.)*

Birth centers occupied by fewer than four patients, not including infants, at any one time; not providing sleeping facilities for four or more occupants; and not providing treatment procedures that render four or more patients, not including infants, incapable of self-preservation at any one time should be classified as business occupancies. For birth centers occupied by patients not meeting these parameters, see Chapter 19.

Service facilities common to city office buildings such as newsstands, lunch counters serving fewer than 50 persons, barber shops, and beauty parlors are included in the business occupancy group.

City halls, town halls, and courthouses are included in the business occupancy group insofar as their principal function is the transaction of public business and the keeping of books and records. Insofar as they are used for assembly purposes, they are classified as assembly occupancies.

In evaluating the appropriate classification of laboratories, the authority having jurisdiction should treat each case individually, based on the extent and nature of the associated

--`,,```,,,,````-`-`,,`,,`,`,,`---
Copyright National Fire Protection Association
Provided by IHS under license with NFPA
No reproduction or networking permitted without license from IHS
Not for Resale

hazards. For laboratories within the scope of NFPA 45, *Standard on Fire Protection for Laboratories Using Chemicals*, the occupancies are defined in NFPA 45, Section 3.3, as follows:

(1) Noninstructional labs are considered industrial.
(2) Labs within the scope of NFPA 99, *Standard for Health Care Facilities*, are considered health care.
(3) Instructional labs for grades 12 and below are considered educational.
(4) Labs for grades above grade 12 and Class D labs are business occupancies.

A.3.3.424.3 Day-Care Occupancy. Day-care occupancies include the following:

(1) Adult day-care occupancies, except where part of a health care occupancy
(2) Child day-care occupancies
(3) Day-care homes
(4) Kindergarten classes that are incidental to a child day-care occupancy
(5) Nursery schools

In areas where public schools offer only half-day kindergarten programs, many child day-care occupancies offer state-approved kindergarten classes for children who need full-day care. As these classes are normally incidental to the day-care occupancy, the requirements of the day-care occupancy should be followed.

A.3.3.424.4 Detention and Correctional Occupancy. Detention and correctional occupancies include the following:

(1) Adult and juvenile substance abuse centers
(2) Adult and juvenile work camps
(3) Adult community residential centers
(4) Adult correctional institutions
(5) Adult local detention facilities
(6) Juvenile community residential centers
(7) Juvenile detention facilities
(8) Juvenile training schools

See A.21.1.1.4.

A.3.3.424.5 Educational Occupancy. Educational occupancies include the following:

(1) Academies
(2) Kindergartens
(3) Schools

An educational occupancy is distinguished from an assembly occupancy in that the same occupants are regularly present.

In evaluating the appropriate classification of laboratories, the authority having jurisdiction should treat each case individually, based on the extent and nature of the associated hazards. For laboratories within the scope of NFPA 45, *Standard on Fire Protection for Laboratories Using Chemicals*, the occupancies are defined in NFPA 45, Section 3.3, as follows:

(1) Noninstructional labs are considered industrial.
(2) Labs within the scope of NFPA 99, *Standard for Health Care Facilities*, are considered health care.
(3) Instructional labs for grades 12 and below are considered educational.
(4) Labs for grades above grade 12 and Class D labs are business occupancies.

A.3.3.424.6 Health Care Occupancy. Health care occupancies include the following:

(1) Ambulatory health care facilities
(2) Hospitals
(3) Limited care facilities
(4) Nursing homes

Occupants of health care occupancies typically have physical or mental illness, disease, or infirmity. They also include infants, convalescents, or infirm aged persons.

In evaluating the appropriate classification of laboratories, the authority having jurisdiction should treat each case individually, based on the extent and nature of the associated hazards. For laboratories within the scope of NFPA 45, *Standard on Fire Protection for Laboratories Using Chemicals*, the occupancies are defined in NFPA 45, Section 3.3, as follows:

(1) Noninstructional labs are considered industrial.
(2) Labs within the scope of NFPA 99, *Standard for Health Care Facilities*, are considered health care.
(3) Instructional labs for grades 12 and below are considered educational.
(4) Labs for grades above grade 12 and Class D labs are business occupancies.

A.3.3.424.7 Industrial Occupancy. Industrial occupancies include the following:

(1) Drycleaning plants
(2) Factories of all kinds
(3) Food processing plants
(4) Gas plants
(5) Hangars (for servicing/maintenance)
(6) Laundries
(7) Power plants
(8) Pumping stations
(9) Refineries
(10) Sawmills
(11) Telephone exchanges

In evaluating the appropriate classification of laboratories, the authority having jurisdiction should treat each case individually, based on the extent and nature of the associated hazards. For laboratories within the scope of NFPA 45, *Standard on Fire Protection for Laboratories Using Chemicals*, the occupancies are defined in NFPA 45, Section 3.3, as follows:

(1) Noninstructional labs are considered industrial.
(2) Labs within the scope of NFPA 99, *Standard for Health Care Facilities*, are considered health care.
(3) Instructional labs for grades 12 and below are considered educational.
(4) Labs for grades above grade 12 and Class D labs are business occupancies.

A.3.3.424.7.1 General Industrial Occupancy. General industrial occupancies include multistory buildings where floors are occupied by different tenants or buildings suitable for such occupancy and, therefore, are subject to possible use for types of industrial processes with a high density of employee population.

A.3.3.424.8 Mercantile Occupancy. Mercantile occupancies include the following:

(1) Auction rooms
(2) Department stores
(3) Drugstores
(4) Restaurants with fewer than 50 persons
(5) Shopping centers
(6) Supermarkets

Copyright National Fire Protection Association
Provided by IHS under license with NFPA
No reproduction or networking permitted without license from IHS
Not for Resale

Office, storage, and service facilities incidental to the sale of merchandise and located in the same building should be considered part of the mercantile occupancy classification.

A.3.3.424.10 Multiple Occupancy. Multiple occupancy describes a situation where more than one occupancy classification exists in a building. The terms *mixed occupancy* and *separated occupancy* refer to subdivisions of multiple occupancies, and include their own unique protection requirements.

A.3.3.424.11 Residential Board and Care Occupancy. The following are examples of facilities that are classified as residential board and care occupancies:

(1) Group housing arrangement for physically or mentally handicapped persons who normally attend school in the community, attend worship in the community, or otherwise use community facilities
(2) Group housing arrangement for physically or mentally handicapped persons who are undergoing training in preparation for independent living, for paid employment, or for other mainstream community activities
(3) Group housing arrangement for the elderly that provides personal care services but that does not provide nursing care
(4) Facility for social rehabilitation, alcoholism, drug abuse, or mental health problems that contains a group housing arrangement and that provides personal care services but does not provide acute care
(5) Assisted living facility
(6) Other group housing arrangements that provide personal care services but not nursing care

A.3.3.424.12 Residential Occupancy. Residential occupancies are treated as separate occupancies in this *Code* as follows:

(1) One- and two-family dwellings (Chapter 22)
(2) Lodging or rooming houses (Chapter 23)
(3) Hotels, motels, and dormitories (Chapter 24)
(4) Apartment buildings (Chapter 25)

A.3.3.424.14 Storage Occupancy. Storage occupancies include the following:

(1) Barns
(2) Bulk oil storage
(3) Cold storage
(4) Freight terminals
(5) Grain elevators
(6) Hangars (for storage only)
(7) Parking structures
(8) Stables
(9) Truck and marine terminals
(10) Warehouses

Storage occupancies are characterized by the presence of relatively small numbers of persons in proportion to the area.

A.3.3.440 Organic Peroxide. Some organic peroxides can present an explosion hazard (detonation or deflagration), or they can be shock sensitive. Organic peroxides will decompose over time at a rate that increases with increasing temperature. Decomposition products might be flammable. Organic peroxides are subdivided into classes as follows:

(1) Unclassified, detonatable organic peroxides are peroxides that are capable of detonation, that present an extremely high explosion hazard through rapid explosive decomposition, and that are regulated as explosives.
(2) Class I organic peroxides are peroxides that are capable of deflagration, but not detonation, and that present a high explosion hazard through rapid decomposition.
(3) Class II organic peroxides are peroxides that burn very rapidly and present a severe reactivity hazard.
(4) Class III organic peroxides are peroxides that burn rapidly and present a moderate reactivity hazard.
(5) Class IV organic peroxides are peroxides that burn in the same manner as ordinary combustibles and present a minimum reactivity hazard.
(6) Class V organic peroxides are peroxides that burn with less intensity than ordinary combustibles or do not sustain combustion and do not present a reactivity hazard.

A.3.3.443 Outside Stair. See 11.2.2.

A.3.3.445 Oxidizer. Oxidizer liquids and solids are subdivided as follows:

(1) A Class 4 oxidizer is an oxidizer that can undergo an explosive reaction due to contamination or exposure to thermal or physical shock, enhances the burning rate, and might cause spontaneous ignition of combustible materials.
(2) A Class 3 oxidizer is an oxidizer that causes a severe increase into the burning rate of combustible materials with which it comes into contact or that undergoes vigorous, self-sustained decomposition due to contamination or exposure to heat.
(3) A Class 2 oxidizer is an oxidizer that causes a moderate increase in the burning rate or that might cause spontaneous ignition of combustible materials with which it comes into contact.
(4) A Class 1 oxidizer is an oxidizer whose primary hazard is that it slightly increases the burning rate but does not cause spontaneous ignition when it comes into contact with combustible materials.

A.3.3.447.1 Light-Transmitting Plastic Roof Panel. Skylights are not considered light-transmitting plastic roof panels.

A.3.3.447.2.1 Light-Transmitting Plastic Wall Panel. Plastic glazing is not considered a light-transmitting plastic wall panel.

A.3.3.452 Particleboard. The cellulosic material is usually wood.

A.3.3.453 Partition. A partition can be permanent or temporary. *(This annex note is not extracted from ASCE 7.)*

A.3.3.453.2 Smoke Partition. Depending on specific occupancy chapter requirements, a smoke partition might or might not be required to have fire resistance rating.

A.3.3.455.1 Membrane Penetration. A membrane penetration identifies those openings that are to accommodate cables, cable trays, cabinets, conduits, electrical fixtures and outlets, pipes, wires, vents, and similar items.

A.3.3.455.2 Through-Penetration. The term *through-penetration* identifies those openings that are to accommodate cables, cable trays, cabinets, conduits, electrical fixtures and outlets, pipes, wires, vents, and similar items. Blank openings and openings for ducts, chimneys, vents, and similar items can also be through-penetrations.

A.3.3.456 Penthouse. When the area of a penthouse exceeds one-third of the roof area, it is considered a story.

A.3.3.457 Performance Criteria. Performance criteria are stated in engineering terms. Engineering terms include temperatures, radiant heat flux, and levels of exposure to fire

Copyright National Fire Protection Association
Provided by IHS under license with NFPA
No reproduction or networking permitted without license from IHS
Not for Resale

products. Performance criteria provide threshold values used to evaluate a proposed design.

A.3.3.463 Personal Care. Personal care involves responsibility for the safety of the resident while inside the building. Personal care might include the following:

(1) Daily awareness by the management of a resident's functioning and whereabouts
(2) Making and reminding a resident of appointments
(3) Ability and readiness for intervention in the event of a resident experiencing a crisis
(4) Supervision in the areas of nutrition and medication
(5) Actual provision of transient medical care

A.3.3.464 Photoluminescent. The light source is considered internally illuminated.

A.3.3.469.1 Coal Preparation Plant. Coal preparation includes separation, crushing, screening, washing, drying, storage, and loadout of coal to ready it for market. This preparation does not include other facilities such as those containing coal pulverizers used to condition coal for firing in boilers at power-generating plants, for gasification plants, or for utilization purposes.

A.3.3.471 Plastic. Plastics are usually made from resins, polymers, cellulose derivatives, caseins, and proteins. The principal types are thermosetting and thermoplastic.

A.3.3.471.1 Cellular or Foamed Plastic. Cellular or foamed plastic might contain foamed and unfoamed polymeric or monomeric precursors (prepolymer, if used), plasticizers, fillers, extenders, catalysts, blowing agents, colorants, stabilizers, lubricants, surfactants, pigments, reaction control agents, processing aids, and flame retardants.

A.3.3.473 Platform. Platforms also include the head tables for special guests; the raised area for lecturers and speakers; boxing and wrestling rings; theater-in-the-round; and items used for similar purposes wherein there are no overhead drops, pieces of scenery, or stage effects other than lighting and a screening valance. A platform is not intended to be prohibited from using a curtain as a valance to screen or hide the electric conduit, lighting track, or similar fixtures; nor is a platform prohibited from using curtains that are used to obscure the back wall of the stage; a curtain between the auditorium and the stage (grand or house curtain); a maximum of four leg drops; or a valance to screen light panels, plumbing, and similar equipment from view.

A.3.3.476.1 Boiling Point. At the boiling point, the surrounding atmospheric pressure can no longer hold the liquid in the liquid state, and the liquid boils. A low boiling point is indicative of a high vapor pressure and a high rate of evaporation. Where an accurate boiling point is unavailable for the material in question, or for mixtures that do not have a constant boiling point, for purposes of this *Code*, the 10 percent point of a distillation performed in accordance with ASTM D 86-82, *Standard Method of Test for Distillation of Petroleum Products*, can be used as the boiling point of the liquid.

A.3.3.476.2 Flash Point. The minimum temperature at which a liquid gives off vapor in sufficient concentration to form an ignitable mixture with air near the surface of the liquid within the vessel as specified by appropriate test procedure and apparatus as follows: (1) The flash point of a liquid having a viscosity less than 45 SUS at 100°F (37.8°C) and a flash point below 200°F (93°C) are required to be determined in accordance with ASTM D 56, *Standard Test Method for Flash Point by Tag Closed Tester*, (2) the flash point of a liquid having a viscosity of 45 SUS or more at 100°F (37.8°C), or a flash point of 200°F (93°C) or higher, are/is required to be determined in accordance with ASTM D 93, *Standard Test Methods for Flash Point by Pensky-Martens Closed Cup Tester*, (3) as an alternate, ASTM D 3278, *Standard Test Methods for Flash Point of Liquids by Small Scale Closed-Cup Apparatus*, is permitted to be used for paints, enamels, lacquers, varnishes, and related products and their components having flash points between 32°F and 230°F (0°C and 110°C) and a viscosity lower than 150 stokes at 77°F (25°C); (4) as an alternate, ASTM D 3828, *Standard Test Methods for Flash Point by Small Scale Closed Tester*, is permitted to be used for materials other than those for which specific setaflash methods exist.

A.3.3.505 Ramp. See 11.2.5.

A.3.3.508 Recreational Vehicle. A recreational vehicle is ready for highway use if it is on its wheels or jacking system, is attached to the site only by quick-disconnect-type utilities and security devices, and has no permanently attached additions.

A.3.3.538.1 Festival Seating. Festival seating describes situations in assembly occupancies where live entertainment events are held that are expected to result in overcrowding and high audience density that can compromise public safety. It is not the intent to apply the term *festival seating* to exhibitions; sports events; dances; conventions; and bona fide political, religious, and educational events. Assembly occupancies with 15 ft^2 (1.4 m^2) or more per person should not be considered festival seating.

A.3.3.542 Self-Luminous. An example of a self-contained power source is tritium gas. Batteries do not qualify as a self-contained power source. The light source is typically contained inside the device.

A.3.3.543 Self-Preservation (Day-Care Occupancy). Examples of clients who are incapable of self-preservation include infants, clients who are unable to use stairs because of confinement to a wheelchair or other physical disability, and clients who cannot follow directions or a group to the outside of a facility due to mental or behavioral disorders. It is the intent of this *Code* to classify children under the age of 24 months as incapable of self-preservation. Examples of direct intervention by staff members include carrying a client, pushing a client outside in a wheelchair, and guiding a client by direct handholding or continued bodily contact. If clients cannot exit the building by themselves with minimal intervention from staff members, such as verbal orders, classification as incapable of self-preservation should be considered.

A.3.3.572.3 Residential Spa. The spa is intended as a permanent plumbing fixture and is not intended to be moved.

A.3.3.579.1 Design Specification. Design specifications include both hardware and human factors, such as the conditions produced by maintenance and training. For purposes of performance-based design, the design specifications of interest are those that affect the ability of the building to meet the stated goals and objectives.

A.3.3.590.3 Number of Stories. Building levels below the primary level of exit discharge are not counted as stories.

A.3.3.590.4 Occupiable Story. Stories used exclusively for mechanical equipment rooms, elevator penthouses, and similar spaces are not occupiable stories.

Copyright National Fire Protection Association
Provided by IHS under license with NFPA
No reproduction or networking permitted without license from IHS
Not for Resale

A.3.3.600 Structurally Unsafe. Where this *Code* does not include comprehensive information on materials stresses that might be found in existing structures (for example, cast-iron structures and structural clay tile), archaic materials guides and references are permitted to be used to evaluate such materials with the approval of the authority having jurisdiction.

A.3.3.601 Structure. The term *structure* is to be understood as if followed by the words "or portion thereof." *(See also A.3.3.65, Building.)*

A.3.3.601.4 Air-Supported Structure. A cable-restrained air-supported structure is one in which the uplift is resisted by cables or webbing that is anchored by various methods to the membrane or that might be an integral part of the membrane. An air-supported structure is not a tensioned-membrane structure.

A.3.3.601.5 Historic Structure. Designation for an historic structure might be in an official national, regional, or local historic register, listing, or inventory.

A.3.3.601.10 Open Structure. Open structures are often found in oil refining, chemical processing, or power plants. Roofs or canopies without enclosing walls are not considered an enclosure.

A.3.3.601.16 Underground Structure. In determining openings in exterior walls, doors or access panels are permitted to be included. Windows are also permitted to be included if they are openable or provide a breakable glazed area.

A.3.3.606.3 Weather-Exposed Surface. Weather-exposed surfaces do not include the following:

(1) Ceilings and roof soffits enclosed by walls, fascia, bulkheads, or beams that extend a minimum of 12 in. (305 mm) below such ceiling or roof soffits
(2) Walls or portions of walls beneath an unenclosed roof area, where located a horizontal distance from an open exterior opening equal to at least twice the height of the opening
(3) Ceiling and roof soffits located a minimum horizontal distance of 10 ft (3050 mm) from the outer edges of the ceiling or roof soffits

A.3.3.608.8 Light-Diffusing System. Panels, grids, baffles, or lenses that are part of an electrical light fixture are not considered a light-diffusing system.

A.3.3.617 Tent. A tent might also include a temporary tensioned-membrane structure.

A.3.3.618.2 Motor Freight Terminal. The motor freight terminal might also include the following:

(1) Facilities for repair of crates
(2) Cases
(3) Barrels
(4) Cartons
(5) Storage of undelivered freight or damaged goods pending settlement of claims
(6) Rest rooms
(7) Dormitory for drivers
(8) Locker rooms
(9) Meal facilities

A.3.3.636.1.1 Closed System Use (Material). Examples of closed systems for solids and liquids include reaction process operations and product conveyed through a piping system into a closed vessel, system, or piece of equipment.

A.3.3.636.1.2 Open System Use (Material). Examples of open systems for solids and liquids include dispensing from or into open beakers or containers, dip tank operations, and plating tank operations.

A.3.3.636.2 Change of Use. Examples of change of use that might not involve a change of occupancy classification include converting a patient sleeping room to a storage room, enclosing an open court to create an atrium, or converting a shopping center into a mall.

A.3.3.636.4 Common Use (Accessibility). Common use includes the occupants of a homeless shelter or an office building, or guests of such occupants.

A.3.3.636.5 Public Use (Accessibility). Public use might be provided at a building or facility that is privately or publicly owned.

A.3.3.644.5 Fire Wall. Portions of structures that are subdivided by fire walls are permitted to be considered separate buildings for the purpose of applying this *Code*. The intent of the definition is that fire walls have sufficient structural stability to maintain the integrity of the wall in the event of the collapse of the building construction on either side of the wall.

A.3.3.644.15.2 Type II (Perforated) Shear Wall. Hold-down anchors for Type II shear walls are provided at the ends of the wall.

A.3.3.661 Workstation. The workstation might include connected cabinets and contain ventilation equipment, fire protection devices, sensors for gas and other hazards, electrical devices, and other processing and scientific equipment.

A.4.1 The overall goals of this *Code* are presented in 4.1.1. These overall goals are treated in greater depth in 4.1.3 through 4.1.6. In each of these subsections, an overall goal for the subsection is defined, specific goals relating to the overall goal are presented next, and the objectives that relate to the specific goal follow. This format is intended to enhance the usability of the *Code*.

A.4.1.1 These primary goals are intentionally general in nature. Each includes a broad spectrum of topics as shown in 4.1.3. The property protection goal is not a goal unto itself. It is achieved, in part, as a result of designing to achieve the other stated goals, since the intent of the *Code* is not solely to address economic loss of private property. However, the facility/property owner or an insurance representative might also have other goals that might necessitate more stringent objectives, as well as more demanding criteria.

It is important to recognize the difference between the safety and health goals. Safety is intended to address a need for protection against immediate or short-duration hazards, such as a fire, structural failure, or a hazardous chemical spill. Health is intended to address a need for protection against longer-term hazards, such as the growth of molds, vibrations, noise, or contamination of air or water at subtoxic levels, that would not cause immediate problems for building occupants but could have long-term effects on the health of occupants.

Many of the aspects of goals could appear under more than one primary goal. For example, while protection against excessive moisture has been included under the health goal, it could also relate to the safety goal if moisture were to cause corrosion or rot of building structural elements.

Copyright National Fire Protection Association
Provided by IHS under license with NFPA
No reproduction or networking permitted without license from IHS
Not for Resale

A.4.1.2 The objectives apply, regardless of which option a user of the *Code* selects for a design—the performance-based option or the prescriptive-based option. The objectives are stated in more specific terms than the goals and tend to be more quantitative. The goals and objectives, taken together, form the broad, general targets at which a performance-based design can take aim. Specific criteria for a design follow in Chapter 5.

A.4.1.3.1.1 The phrase *reasonably safe from fire* is defined by subsequent language in this *Code*, primarily in the objectives.

A.4.1.3.1.2.2 In many cases, the other provisions of the *Code* that provide safety for occupants will satisfy this goal for protection of emergency responders.

A.4.1.3.2.1 The extent of loading a structure might experience during its life is primarily a function of its geographic location, its configuration, and its intended occupancy. Even given a geographic location, configuration, and occupancy, the magnitude of specific loads that will be experienced by a structure in the future is uncertain and typically needs to be estimated in terms of the probability that more severe loading might be experienced. The appropriate probability of loading to be considered under this *Code* is a function of the certainty with which this loading, and the structural response to this loading, can be estimated; the level of performance anticipated under the loading; and the consequences of failure. The safety from structural failure objectives for this *Code* are enumerated in 4.1.3.2.2. Quantification of these objectives appears in Chapter 5, where these objectives are presented in the form of tolerable levels of damage *(see 5.2.3)* for various design loading scenarios *(see 5.5.3)*.

For failure that results in a gross hazard to life safety, such as global structural collapse, or collapse of large portions of a structure, a 90 percent or greater level of confidence that the structure will not experience such hazard to life safety should be attained. For other adverse performance that does not result in a gross hazard to life safety, a 50 percent or greater level of confidence that the structure will be able to meet the objective should be attained.

A.4.1.3.2.2.1 Buildings that are designed and constructed with sufficient strength and stiffness to conform to the requirements of Chapter 35, Chapter 36, Chapter 40, Chapter 41, Chapter 43, Chapter 44, Chapter 45, and Chapter 47, together with all standards referenced therein, are deemed to comply with this objective. Alternative means of demonstrating compliance with this objective are described in Chapter 5. This performance applies to the building structure, as well as the nonstructural components and permanent fixtures.

A.4.1.3.2.2.2 Although structural failure is not anticipated under extreme loads, potentially extensive damage to structural and nonstructural components is anticipated under extreme earthquake loads and moderate damage to cladding might occur under extreme wind loads. Buildings that are designed and constructed with sufficient strength, stiffness, and ductility to conform to the requirements of Chapter 35, Chapter 36, Chapter 40, Chapter 41, Chapter 43, Chapter 44, Chapter 45, and Chapter 47, together with all standards referenced therein, are deemed to comply with this objective. Alternative means of demonstrating compliance with this objective are described in Chapter 5.

A.4.1.3.3.1 The phrase *reasonably safe during normal use* is defined by subsequent language in this *Code*, primarily in the objectives. Certain requirements, such as heights of guards and stair dimensions, are provided to ensure that the occupants are safe during nonemergency use of the buildings. Failure to address these features could result in falls or other injuries to occupants in their normal day-to-day activities in the building.

A.4.1.4.1.1 The phrase *reasonably safe from contaminants in the interior environment* is defined by subsequent language in this *Code*, primarily in the objectives. The interior environment includes issues such as the quality of indoor air and indoor climate.

A.4.1.4.5.1 Note that, in providing personal hygiene facilities, such as water closets and sinks, the hazard to building occupants' health can be reduced. Beyond the provision of a certain number of such facilities, the hazard to health might disappear, and the provision of additional facilities would improve the convenience to occupants, such as reducing waiting times, but not necessarily have any impact on health. It is the health situation that the *Code* is addressing.

A.4.1.5.3.1 The long-term function of a building, in total, is not within the scope of this goal. This goal does relate, however, to the long-term, continued operation and effectiveness of the building to satisfy the goals of safety, health, usability, and public welfare.

A.4.1.5.3.2 This objective is intended to apply to systems, features, and construction that are provided in the building for the purpose of meeting the other objectives and is not intended to apply to nonrequired systems, features, and construction.

A.4.1.6 The reasonable expectations of society are often articulated in other legislation and regulations, or in the expressed direction of public officials.

A.4.1.6.2 NFPA 909, *Code for the Protection of Cultural Resource Properties — Museums, Libraries, and Places of Worship*, and NFPA 914, *Code for Fire Protection of Historic Structures*, serve as additional resources in achieving goals and objectives pertaining to cultural resources. Both documents offer performance-based and prescriptive approaches.

A.4.1.6.3.1 This goal is applicable to certain buildings that have been deemed necessary to the continued welfare of a community.

A.4.1.6.3.2 Examples of buildings that provide a public welfare role for a community might include hospitals, fire stations, evacuation centers, and plants that generate electricity. Also included are buildings with significant impact on the economic viability of the community. This objective is intended to ensure that such facilities are capable of maintaining their essential services following a disaster, since the community's well-being might depend on such services being available.

A.4.1.6.4.2 This objective is intended to apply to those aspects of design and construction that might impact the future operation of the building with respect to such issues as emissions from heating/cooling equipment, solid waste disposal, and water runoff from the building or site.

A.4.2 Additional assumptions that need to be identified for a performance-based design are addressed in Chapter 5.

A.4.4.1 Multiple safeguards should be both passive features, as identified in Chapter 8, and active features, as identified in Chapter 55, and should be used in combination, without placing total reliance on either one.

--`,,```,,,,````-`-`,,`,,`,`,,`---
Copyright National Fire Protection Association
Provided by IHS under license with NFPA
No reproduction or networking permitted without license from IHS
Not for Resale

A.4.4.4 Fire alarms alert occupants to initiate emergency procedures, facilitate orderly conduct of fire drills, and initiate response by emergency services.

A.4.5.6 Examples of changes from one occupancy subclassification to another subclassification of the same occupancy could include a change from a Class B to a Class A mercantile occupancy. Hospitals and nursing homes are both health care occupancies and are defined separately, but they are not established as separate suboccupancies; thus, a change from one to the other does not constitute a change of occupancy subclassification.

For example, a building was used as a hospital but has been closed for four years. It is to be used again as a hospital. As long as the building was not used as another occupancy during the time it was closed, it would be considered an existing hospital.

Hotels and apartments, although both residential occupancies, are treated separately, and a change from one to the other constitutes a change of occupancy.

A.4.6.4 It is the intent of this requirement to permit the door to be secured as long as the securing system is readily overcome by normal tools carried by fire fighters, such as a pick head axe, halligan tool, or similar device. It is not the intent that more specialized tools, such as a rabbit tool, a k-tool, circular saws, rams, or similar devices would be needed.

A.5.1 The performance-based option of this *Code* establishes acceptable levels of risk for buildings and structures as addressed in Section 1.2. While the performance-based option of this *Code* does contain goals, objectives, and performance criteria necessary to provide for an acceptable level of risk, it does not describe how these goals, objectives, and performance criteria are to be met. Design and engineering are needed to meet the provisions of Chapter 5. For fire protection designs, the *SFPE Engineering Guide to Performance-Based Fire Protection Analysis and Design of Buildings* provides a framework for these assessments.

A.5.1.3 A third-party reviewer is a person or group of persons chosen by the authority having jurisdiction to review proposed performance-based designs. Qualifications of the third-party reviewer should include experience, education, and credentials that demonstrate knowledgeable and responsible use of applicable models and methods.

The SFPE *Guidelines for Peer-Review in the Fire Protection Design Process* provides a method for the initiation, scope, conduct, and report of a peer review of a fire protection engineering design.

A.5.1.5 For guidance on reviewing performance-based designs, see the *SFPE Enforcer's Guide to Performance-Based Design Review*. Additional guidance on reviewing designs in which fire risk analysis is used can be found in NFPA 551, *Guide for the Evaluation of Fire Risk Assessments*.

A.5.1.6 Continued compliance with the goals and objectives of the *Code* involves many factors. The building construction — including openings, interior finish, and fire- and smoke-resistive construction — and the building and fire protection systems need to retain at least the same level of performance as is provided for the original design parameters. The use and occupancy should not change to the degree that assumptions made about the occupant characteristics, combustibility of furnishings, and existence of trained personnel are no longer valid. In addition, actions provided by other personnel, such as emergency responders, should not be diminished below the documented assumed levels. Also, actions needed to maintain reliability of systems at the anticipated level need to meet the initial design criteria.

A.5.2.2 The *SFPE Engineering Guide to Design Performance-Based Fire Protection Analysis and Design of Buildings* contains performance criteria associated with reducing the probability of fire spread.

A.5.2.2.2 NFPA 555, *Guide on Methods for Evaluating Potential for Room Flashover*, includes both testing methods and modeling techniques that help in preventing the spread of fire beyond the compartment of fire origin, which is one of the criteria for flashover. Many of the performance criteria related to safety from fire can also be found in NFPA *101*, *Life Safety Code*.

One of the methods that follows can be used to avoid exposing occupants to untenable conditions.

Method 1. The design team can set detailed performance criteria that ensure that occupants are not incapacitated by fire effects. The *SFPE Engineering Guide to Performance-Based Fire Protection Analysis and Design of Buildings* describes a process of establishing tenability limits. The guide references D. A. Purser, "Toxicity Assessment of Combustion Products," Chapter 2/6 , *SFPE Handbook of Fire Protection Engineering*, which describes a fractional effective dose (FED) calculation approach, which is also contained in NFPA 269, *Standard Test Method for Developing Toxic Potency Data for Use in Fire Hazard Modeling*. FED addresses carbon monoxide, hydrogen cyanide, carbon dioxide, hydrogen chloride, hydrogen bromide, and anoxia effects. It is possible to use the test data, combined with laboratory experience, to estimate the FED value that leads to the survival of virtually all people. This value is about 0.8.

There is a relationship between exposures leading to death and those leading to incapacitation. Kaplan [Kaplan et al., *Journal of Fire Science*, 2:286–305 (1984)] found that rodent susceptibility is similar to that of humans and that, for the narcotic gases, CO and HCN, incapacitation is estimated to occur at one-third to one-half of the lethal exposure. A set of very large statistical studies on human lethality associated with carbon monoxide involving almost 5000 fatalities (Hirschler et al., "Carbon Monoxide and Human Lethality: Fire and Non-Fire Studies," Elsevier, 1993) showed that the vast majority of fire deaths are attributable to carbon monoxide poisoning, which results in lethality at levels as low as 25 percent carboxyhemoglobin (much lower than previously believed) without requiring the effect of additional toxicants. This work was also confirmed by Gann [Gann et al., *Fire and Materials* 18:193 (1994)], who also found that carbon monoxide dominates the lethality of fire smoke, since most fire deaths occur remote from the fire room in fires that have proceeded past flashover. Thus, if an FED value of 0.8 were used for a nonlethal exposure, an FED of 0.3 would be reasonable for a non-incapacitating exposure. If the authority having jurisdiction or the design professional is concerned with potential toxic fire effects other than those addressed by the FED procedure as documented, the calculation procedure can be expanded by adding additional terms to the FED equation, with each term expressed as a ratio. The numerator of the ratio is the cumulative exposure to that fire effect, measured as an integral of the product of instantaneous exposure (concentration for toxic products) and time. The denominator of the ratio is the quantity of cumulative exposure for which FED equals the chosen threshold value (that is, 0.8 or 0.3) based on that fire effect alone. A complete analysis of tenability requires consideration of tenability criteria for thermal effects (convected

Copyright National Fire Protection Association
Provided by IHS under license with NFPA
No reproduction or networking permitted without license from IHS
Not for Resale

heat and radiated heat) and smoke obscuration, as well as those for smoke toxicity. An example of the application of such criteria is shown in ASTM E 2280, *Standard Guide for Fire Hazard Assessment of the Effect of Upholstered Seating Furniture Within Patient Rooms of Health Care Facilities*.

For buildings where an unusually large fraction of the occupants are especially vulnerable, the calculation procedure for the smoke toxicity incapacitating criterion should be modified to use FED values lower than 0.8 or 0.3.

Method 2. For each design fire scenario and design specifications, conditions, and assumptions, the design team can demonstrate that each room or area will be fully evacuated before the smoke and toxic gas layer in that room descends to a level lower than 6 ft (1830 mm) above the floor. The timing of such an evacuation means that no occupant is exposed to fire effects. Such an evacuation requires calculation of the locations, movement, and behavior of occupants, because fire effects and occupants are kept separate by moving the occupants. A level of 60 in. (1525 mm) is often used in calculations, but, at that level, a large fraction of the population would not be able to stand, walk, or run normally and still avoid inhalation of toxic gases. They would have to bend over or otherwise move their heads closer to the floor level.

Method 3. For each design fire scenario and design specifications and assumptions, the design team can demonstrate that the smoke and toxic gas layer will not descend to a level lower than 6 ft (1830 mm) above the floor in any occupied room. The advantage of this procedure is that it conservatively requires that no occupant need be exposed to fire effects, regardless of where occupants are located or where they move. This removes the need to make any calculations regarding occupants, including their behavior, movement locations, pre-fire characteristics, and reactions to fire effects. This procedure is even more conservative and simpler than the procedure in Method 2, because it does not allow fire effects in occupied rooms to develop to a point where people could be affected at any time during the fire.

Method 4. For each design fire scenario and design specifications and assumptions, the design team can demonstrate that no fire effects will reach any occupied room. The advantage of this procedure is that it removes the need to make any calculations regarding occupants, including their behavior, movement, locations, pre-fire characteristics, and reactions to fire effects. A further advantage is that it also removes the need for some of the modeling of fire effects, because it is not necessary to model the filling of rooms, only the spread of fire effects to those rooms. This procedure is even more conservative and simpler than the procedures in Method 2 and Method 3, because it does not allow any fire effects in occupied rooms.

A.5.2.2.5 This criterion might be met by the provisions of 5.2.2.3 in some cases. In others, the time necessary for establishing safety for emergency responders might be greater than for occupant evacuation, and additional measures might need to be taken.

A.5.2.2.6 The *SFPE Engineering Guide to Design Performance-Based Fire Protection Analysis and Design of Buildings* contains performance criteria associated with reducing the probability of fire spread.

A.5.2.3.1 Section 5.5 specifies the specific combinations of loads and design scenarios that structures should be constructed and designed to withstand, without exceeding the stated performance levels. The various performance levels are described in 5.2.3.2, 5.2.3.3, and 5.2.3.4.

A.5.2.3.2 The serviceability level is that level of performance expected of structures when subjected to loading that is normally anticipated to occur one or more times during the life of the structure. Interruption of building use or loss of function should not occur as a result of such loading.

A.5.2.3.3 A structure should be considered to be unsafe for continued occupancy if damage sustained by the structure or its nonstructural components, or both, under load has resulted in a substantially greater propensity for failure or collapse than that which existed prior to loading. ASCE/FEMA 356, *Prestandard for the Seismic Rehabilitation of Buildings*, and Appendix G of the SEAOC *Recommended Lateral Force Requirements and Commentary* provide criteria that might be used to confirm compliance with the immediate occupancy performance level.

A.5.2.3.4 The collapse prevention criteria contained in ASCE/FEMA 356, *Prestandard for the Seismic Rehabilitation of Buildings*, and Appendix G of the SEAOC *Recommended Lateral Force Requirements and Commentary* might be used to demonstrate compliance with the requirements of 5.2.3.4 under the extreme loads defined in 5.5.3.3.

A.5.2.4.3 The *SFPE Engineering Guide to Predicting Human Behavior in Fire* identifies methods of notifying occupants of fire.

A.5.2.6.1 Maximum permissible concentrations of indoor air contaminants can be found in the *Industrial Ventilation Manual* published by the American Conference of Governmental Industrial Hygienists.

A.5.2.6.2 Ventilation rates for outdoor air supplied to buildings can be found in ASHRAE 62, *Ventilation for Acceptable Indoor Air Quality*. Guidance on minimum heating and moisture levels to provide a reasonable degree of occupant health in buildings can be found in the ASHRAE handbooks.

Maximum permissible concentrations of indoor air contaminants can be found in the *Industrial Ventilation Manual* published by the American Conference of Governmental Industrial Hygienists.

A.5.2.8.2 Performance criteria for a building to resist flood loads, as opposed to surface water entry, are included in 5.2.3.1.

A.5.4 In the context of this *Code*, design characteristics are those attributes of the building and its location, contents, and occupants that need to be specified or quantified, or both, to allow evaluation of a design with respect to the goals, objectives, and performance criteria, using appropriate design scenarios and verification methods. Some design characteristics are specified in this *Code*. Others might be specified by the authority having jurisdiction to accommodate local conditions, and still others might be specified by the designer of the building.

A.5.4.1.5 This requirement includes assumptions about the interrelations between the performance of building elements and systems, occupant behavior, or emergency response actions that conflict with each other. For each design scenario, care needs to be taken to ensure that conflicts in actions do not occur. Typical conflicts could include the following:

(1) Assuming a fire door will remain closed during the fire to contain smoke, while this same door is used by occupants during egress from the area
(2) Assuming fire apparatus will arrive immediately from a distant location to provide water to fire department connections

Copyright National Fire Protection Association
Provided by IHS under license with NFPA
No reproduction or networking permitted without license from IHS
Not for Resale

For example, an assumption that compartmentation blocking the passage of fire and smoke will be maintained at the door to a stairwell cannot be paired with an assumption that evacuation through that door will extend over many minutes.

A.5.4.2.1 Building contents and furnishings are not normally included in design specifications; however, in some cases, they might have an impact on building or occupant behavior. Where contents and furnishings could impact on building or occupant behavior, the designer must present the authority having jurisdiction with detailed information about such contents and furnishings and their locations in the building to enable an assessment of their impact in various design scenarios to be determined.

A designer must also clearly express the overall layout of the building, especially those items that might not appear on building plans but that could impact on the performance of the building or the occupants. Examples include the layout of office cubicles that could affect emergency egress and temporary storage areas that could exceed permissible loading for a portion of a floor assembly.

A.5.4.2.2 Systems addressed by this requirement include automatic fire suppression systems and fire alarm systems. Performance issues that need to be documented might include response time indexes, discharge densities, and waterflow distribution patterns. Calculations should not include an unlimited supply of extinguishing agent if only a limited supply will be provided in the actual structure or building.

A.5.4.3.1 Guidance on occupant characteristics for use in design can be found in the *SFPE Engineering Guide to Predicting Human Behavior in Fire*.

A.5.4.3.3 The four basic characteristics — sensibility, reactivity, mobility, and susceptibility — comprise a minimum, exhaustive set of mutually exclusive performance characteristics of people in buildings that can affect a building's ability to meet the goals, objectives, and performance criteria of this *Code*. The characteristics are briefly described as follows:

(1) *Sensibility (to physical cues)* is the ability to sense the sounding of an alarm and can also include discernment and discrimination of visual and olfactory cues in addition to auditory emanations from an event itself.
(2) *Reactivity (ability to interpret correctly cues and take appropriate action)* can be a function of cognitive capacity, speed or instinctive reaction, or group dynamics, and the reliability or likelihood of a wrong decision, such as in situations where familiarity with the premises influences wayfinding, might need to be considered.
(3) *Mobility (speed of movement)* is determined by individual capabilities as well as crowding phenomena, such as arching at doorways.
(4) *Susceptibility (to products of combustion)* includes metabolism, lung capacity, pulmonary disease, allergies, or other physical limitations that affect survivability during a building emergency.

In application, as with the use of computer evacuation models, assumptions can address a larger number of factors that are components of these basic response characteristics. Examples are shown in Table A.5.4.3.3.

For a more detailed explanation of occupant characteristics, see the *SFPE Engineering Guide to Predicting Human Behavior in Fire*. Occupant characteristics that are discussed in the guide include the following:

(1) Population numbers and density
(2) Lone occupant or with others
(3) Familiarity with the building
(4) Distribution and activities
(5) Alertness
(6) Physical and cognitive ability
(7) Social affiliation
(8) Role and responsibility
(9) Location
(10) Commitment
(11) Focal point
(12) Occupant condition
(13) Gender
(14) Culture
(15) Age

Table A.5.4.3.3 Examples of Response Characteristics

Characteristic	Example
Alertness	Awake/asleep; can depend on time of day
Responsiveness	Ability to sense cues and react
Commitment	Degree to which occupant is committed to an activity underway before the alarm
Focal point	Point at which an occupant's attention is focused; for example, front of classroom, stage, or server in business environment
Physical and mental capabilities	Can affect ability to sense, to respond, and to react to cues; might be related to age or disability
Role	Can determine whether occupant will lead or follow others
Familiarity	Can depend on time spent in building or participation in emergency training
Social affiliation	Extent to which an occupant will act/react as an individual or as a member of a group
Condition	Over the course of the fire, the effects — both physiological and psychological — of the fire and its combustion products on each occupant

A.5.4.3.5 The number of people expected to be contained in a room or area should be based on the occupant load factor specified in 11.3.1.2 or other approved sources.

A.5.4.3.6 For example, in hospitals, staff characteristics such as number, location, quality, and frequency of training should be considered.

A.5.4.5.1 Design proposals need to state explicitly any design specifications or estimations regarding building safety plans, inspection programs, or other ongoing programs whose performance is necessary for the building, when occupied or operational, to meet the stated goals, objectives, and performance criteria of this *Code*.

Copyright National Fire Protection Association
Provided by IHS under license with NFPA
No reproduction or networking permitted without license from IHS
Not for Resale

Programs of interest include any maintenance, training, labeling, or certification programs required to ensure operational status or reliability in building systems or features.

A.5.4.5.3 This requirement includes provisions that are in excess of basic requirements covered by referenced codes and standards, typical design requirements, and operating procedures. It includes provisions such as more frequent periodic testing and maintenance to increase the reliability of safety systems, redundant systems to increase reliability, on-site guard service to enhance detection of fires and aid in fire response procedures, staff training, availability and performance of emergency response personnel, and other factors.

A.5.5 Many events can occur during the life of a building; some have a higher probability of occurrence than others. Some events, though not typical, could have a devastating effect on a building. A reasonable design should be able to achieve the goals, objectives, and performance criteria of this *Code* for any typical or common design scenario, and for some of the nontypical, potentially devastating scenarios, up to a level commensurate with society's expectations as reflected in this *Code*.

The challenge in selecting design scenarios is finding a manageable number that are sufficiently diverse and representative so that, if the design is reasonably safe for those scenarios, it should then be reasonably safe for all scenarios, except for those specifically excluded as being unrealistically severe or sufficiently infrequent to be fair tests of the design.

A.5.5.1.2 The *SFPE Engineering Guide to Performance-Based Fire Protection Analysis and Design of Buildings* identifies methods for evaluating fire scenarios.

A.5.5.1.3 It is desirable to consider a wide variety of different design scenarios to evaluate the complete capabilities of the building or structure. Design scenarios should not be limited to a single event or a couple of worst-case events.

A.5.5.2.1 An example of such a scenario for a health care occupancy would involve a patient room with two occupied beds with a fire initially involving one bed and the room door open. This is a cursory example in that much of the explicitly required information indicated in 5.5.2.1 can be determined from the information provided in the example. Note that it is usually necessary to consider more than one scenario to capture the features and conditions typical of an occupancy.

A.5.5.2.2 Examples of such scenarios are a fire involving ignition of gasoline as an accelerant in a means of egress, clothing racks in corridors, renovation materials, or other fuel configurations that can cause an ultrafast fire. The means of egress chosen is the doorway with the largest egress capacity among doorways normally used in the ordinary operation of the building. The baseline occupant characteristics for the property are assumed. At ignition, doors are assumed to be open throughout the building.

A.5.5.2.3 An example of such a scenario is a fire in a storage room adjacent to the largest occupiable room in the building. The contents of the room of fire origin are specified to provide the largest fuel load and the most rapid growth in fire severity consistent with the normal use of the room. The adjacent occupiable room is assumed to be filled to capacity with occupants. Occupants are assumed to be somewhat impaired in whatever form is most consistent with the intended use of the building. At ignition, doors from both rooms are assumed to be open. Depending on the design, doorways connect the two rooms, or they connect via a common hallway or corridor.

For purposes of this scenario, an occupiable room is a room that might contain people; that is, a location within a building where people are typically found.

A.5.5.2.4 An example of such a scenario is a fire originating in a concealed wall space or ceiling space adjacent to a large, occupied function room. Ignition involves concealed combustibles, including wire or cable insulation and thermal or acoustical insulation. The adjacent function room is assumed to be occupied to capacity. The baseline occupant characteristics for the property are assumed. At ignition, doors are assumed to be open throughout the building.

A.5.5.2.5 An example of such a scenario is a cigarette fire in a trash can. The trash can is close enough to room contents to ignite more substantial fuel sources but is not close enough to any occupant to create an intimate-with-ignition situation. If the intended use of the property involves the potential for some occupants to be incapable of movement at any time, then the room of origin is chosen as the type of room likely to have such occupants, filled to capacity with occupants in that condition. If the intended use of the property does not involve the potential for some occupants to be incapable of movement, then the room of origin chosen is to be an assembly or function area characteristic of the use of the property, and the trash can is placed so that it is shielded by furniture from suppression systems. At ignition, doors are assumed to be open throughout the building.

A.5.5.2.6 An example of such a scenario is a fire originating in the largest fuel load of combustibles possible in normal operation in a function or assembly room, or in a process/manufacturing area, characteristic of the normal operation of the property. The configuration, type, and geometry of the combustibles are chosen so as to produce the most rapid and severe fire growth or smoke generation consistent with the normal operation of the property. The baseline occupant characteristics for the property are assumed. At ignition, doors are assumed to be closed throughout the building.

This scenario includes everything from a big couch fire in a small dwelling to a rack storage fire in combustible liquids stock in a big-box retail store.

A.5.5.2.7 An example of such a scenario is an exposure fire. The initiating fire is the closest and most severe fire possible consistent with the placement and type of adjacent properties and the placement of plants and combustible adornments on the property. The baseline occupant characteristics of the property are assumed.

This category includes wildlands/urban interface fires and exterior wood shingle problems, where applicable.

A.5.5.2.8 This scenario addresses a set of conditions with a typical fire originating in the building with any one passive or active fire protection system or feature being ineffective. Examples include unprotected openings between floors or between fire walls or fire barrier walls where rated fire doors fail to close automatically or are blocked open, the sprinkler system water supply is shut off, the fire alarm system is nonoperative, the smoke management system is not operational, or the automatic smoke dampers are blocked open. This scenario should represent a reasonable challenge to the other building features provided by the design and presumed to be available.

The exemption from Fire Design Scenario 8 is permitted to be applied to each active or passive fire protection system in-

--`,,```,,,,````-`-`,,`,,`,`,,`---

Copyright National Fire Protection Association
Provided by IHS under license with NFPA
No reproduction or networking permitted without license from IHS
Not for Resale

dividually and requires two different types of information to be developed by analysis and approved by the authority having jurisdiction. System reliability is to be analyzed and accepted. Design performance in the absence of the system is also to be analyzed and accepted, but acceptable performance does not require fully meeting the stated goals and objectives. It might not be possible to meet fully the goals and objectives if a key system is unavailable, and yet no system is totally reliable. The authority having jurisdiction will determine which level of performance, possibly short of the stated goals and objectives, is acceptable, given the very low probability (that is, the system's unreliability probability) that the system will not be available.

A.5.5.4.1 An example of such a scenario would involve a fire or earthquake effectively blocking the principal entrance/exit but not immediately endangering the occupants. The full occupant load of the assembly space must exit using secondary means.

A.5.7 The assessment of precision required in 5.8.2 will require a sensitivity and reasonableness check, which can be translated into safety factors.

When performing a sensitivity analysis, the first run a model user makes should be labeled as the base case, using the nominal values of the various input parameters. However, the model user should not rely on a single run as the basis for any performance-based fire safety system design. Ideally, each variable or parameter that the model user made to develop the nominal input data should have multiple runs associated with it, as should combinations of key variables and parameters. Thus, a sensitivity analysis should be conducted that provides the model user with data that indicates how the effects of a real fire might vary and how the response of the proposed fire safety design might also vary.

The interpretation of a model's predictions can be a difficult exercise if the model user does not have knowledge of fire dynamics or human behavior.

When performing a reasonableness check, the model user should first try to determine whether the predictions actually make sense; that is, they don't upset intuition or preconceived expectations. Most likely, if the results don't pass this test, an input error has been made.

Sometimes the predictions appear to be reasonable but are, in fact, incorrect. For example, a model can predict that temperatures close to a fire are lower than those that are farther from the fire. The values themselves might be reasonable; for example, they are not hotter than the fire, but they don't "flow" down the energy as expected.

A margin of safety can be developed using the results of the sensitivity analysis in conjunction with the performance criteria to provide the possible range of time during which a condition is estimated to occur.

Safety factors and margin of safety are two concepts used to quantify the amount of uncertainty in engineering analyses. Safety factors are used to provide a margin of safety and represent, or address, the gap in knowledge between the theoretically perfect model, that is, reality, and the engineering models that can only partially represent reality.

Safety factors can be applied to either the predicted level of a physical condition or to the time at which the condition is predicted to occur. Thus, a physical or a temporal safety factor, or both, can be applied to any predicted condition. A predicted condition (that is, a parameter's value) and the time at which it occurs are best represented as distributions. Ideally, a computer fire model predicts the expected or nominal value of the distribution. Safety factors are intended to represent the spread of these distributions.

Given the uncertainty associated with data acquisition and reduction, and the limitations of computer modeling, any condition predicted by a computer model can be thought of as an expected or nominal value within a broader range. For example, an upper layer temperature of 1110°F (600°C) is predicted at a given time. If the modeled scenario is then tested (that is, full-scale experiment based on the computer model's input data), the actual temperature at that given time could be 1185°F or 1085°F (640°C or 585°C). Therefore, the temperature should be reported as 1110°F + 75°F, –25°F (600°C + 40°C, –15°C) or as a range of 1085°F to 1185°F (585°C to 640°C).

Ideally, predictions are reported as a nominal value, a percentage, or an absolute value. As an example, an upper layer temperature prediction could be reported as 1110°F, 55°F (600°C, 30°C) or 1110°F, 5 percent (600°C, 5 percent). In this case, the physical safety factor is 0.05 (that is, the amount by which the nominal value should be degraded and enhanced). Given the state-of-the-art of computer fire modeling, this is a very low safety factor. Physical safety factors tend to be on the order of tens of percent. A safety factor of 50 percent is not unheard of.

Part of the problem in establishing safety factors is that it is difficult to state the percentage or range that is appropriate. These values can be obtained when the computer model predictions are compared to test data. However, using computer fire models in a design mode does not facilitate this comparison since the room being analyzed has not been built yet, and test scenarios do not necessarily depict the intended design.

A sensitivity analysis should be performed based on the assumptions that affect the condition of interest. A base case that uses all nominal values for input parameters should be developed. The input parameters should be varied over reasonable ranges, and the variation in predicted output should be noted. This output variation can then become the basis for physical safety factors.

The temporal safety factor addresses the issue of when a condition is predicted and is a function of the rate at which processes are expected to occur. If a condition is predicted to occur 2 minutes after the start of the fire, then such a prediction can be used as a nominal value. A process similar to that described previously for physical safety factors can also be employed to develop temporal safety factors. In the case of temporal safety factors, however, the rates (for example, rates of heat release and toxic product generation) will be variable rather than absolute values (for example, material properties).

The margin of safety can be thought of as a reflection of societal values and can be imposed by the authority having jurisdiction for that purpose. Since the time for which a condition is predicted will most likely be the focus of the authority having jurisdiction (for example, the model predicts occupants will have 5 minutes to safely evacuate), the margin of safety will be characterized by temporal aspects and tacitly applied to the physical margin of safety.

Escaping the harmful effects of fire (or mitigating them) is, effectively, a race against time. When assessing fire safety system designs based on computer model predictions, the choice of an acceptable evacuation time is important. When an authority having jurisdiction is faced with the predicted time of untenability, a decision needs to be made regarding whether sufficient time is available to ensure the safety of building occupants. The authority having jurisdiction is assessing the

Copyright National Fire Protection Association
Provided by IHS under license with NFPA
No reproduction or networking permitted without license from IHS
Not for Resale

margin of safety. Is there sufficient time to get everyone out safely? If the authority having jurisdiction feels that the predicted egress time is too close to the time of untenability, then the authority having jurisdiction can impose an additional time that the designer will have to incorporate into the system design. In other words, the authority having jurisdiction can impose a greater margin of safety than that originally proposed by the designer.

A.5.8.1 The *SFPE Engineering Guide to Performance-Based Fire Protection Analysis and Design of Buildings* describes the documentation that should be provided for a performance-based design.

Proper documentation of a performance design is critical to the design acceptance and construction. Proper documentation will also ensure that all parties involved understand what is necessary for the design implementation, maintenance, and continuity of the fire protection design. If attention to details is maintained in the documentation, then there should be little dispute during approval, construction, start-up, and use.

Poor documentation could result in rejection of an otherwise good design, poor implementation of the design, inadequate system maintenance and reliability, and an incomplete record for future changes or for testing the design forensically.

A.5.8.2 The sources, methodologies, and data used in performance-based designs should be based on technical references that are widely accepted and used by the appropriate professions and professional groups. This acceptance is often based on documents that are developed, reviewed, and validated under one of the following processes:

(1) Standards developed under an open consensus process conducted by recognized professional societies, codes or standards organizations, or governmental bodies
(2) Technical references that are subject to a peer review process and published in widely recognized peer-reviewed journals, conference reports, or other publications
(3) Resource publications such as the *SFPE Handbook of Fire Protection Engineering*, which are widely recognized technical sources of information

The following factors are helpful in determining the acceptability of the individual method or source:

(1) Extent of general acceptance of the method or source in the relevant professional community as indicated by criteria that include publications that have peer-reviewed, widespread citation in the technical literature, and adoption by or within a consensus document
(2) Extent of documentation of the method, including the analytical method itself, assumptions, scope, limitations, data sources, and data reduction methods
(3) Extent of validation and analysis of uncertainties, including comparison of the overall method with experimental data to estimate error rates as well as analysis of the uncertainties of input data, uncertainties and limitations in the analytical method, and uncertainties in the associated performance criteria
(4) Extent to which the method is based on sound scientific principles
(5) Extent to which the proposed method is within the stated scope and limitations of the supporting information, including the range of applicability for which there is documented validation and considering factors such as spatial dimensions, occupant characteristics, and ambient conditions, which can limit valid applications

In many cases, a method will be built from, and will include, numerous component analyses. These component analyses should be evaluated using the same factors that are applied to the overall method as outlined in items (1) through (5) of the previous paragraph.

A method to address a specific fire safety issue, within documented limitations or validation regimes, might not exist. In such a case, sources and calculation methods can be used outside of their limitations, provided that the design team recognizes the limitations and addresses the resulting implications.

The technical references and methodologies to be used in a performance-based design should be closely evaluated by the design team, the authority having jurisdiction, and, possibly, a third-party reviewer. The strength of the technical justification should be judged using criteria for acceptability for methods or sources in items (1) through (5). This justification can be strengthened by the presence of data obtained from fire testing.

A.5.8.11 Documentation for modeling should conform to ASTM E 1472, *Standard Guide for Documenting Computer Software for Fire Models*, although most, if not all, models were originally developed before this standard was promulgated.

Information regarding the use of DETACT-QS can be found in the *SFPE Engineering Guide – Evaluation of the Computer Fire Model DETACT-QS*.

A.6.1.2.1 Assembly occupancies might include the following:

(1) Armories
(2) Assembly halls
(3) Auditoriums
(4) Bowling lanes
(5) Club rooms
(6) College and university classrooms, 50 persons and over
(7) Conference rooms
(8) Courtrooms
(9) Dance halls
(10) Drinking establishments
(11) Exhibition halls
(12) Gymnasiums
(13) Libraries
(14) Mortuary chapels
(15) Motion picture theaters
(16) Museums
(17) Passenger stations and terminals of air, surface, underground, and marine public transportation facilities
(18) Places of religious worship
(19) Pool rooms
(20) Recreation piers
(21) Restaurants
(22) Skating rinks
(23) Special amusement buildings, regardless of occupant load
(24) Theaters

Assembly occupancies are characterized by the presence, or potential presence, of crowds with attendant panic hazard in case of fire or other emergency. They are generally or occasionally open to the public, and the occupants, who are present voluntarily, are not ordinarily subject to discipline or control. Such buildings are ordinarily occupied by able-bodied persons and are not used for sleeping purposes. Special conference rooms, snack areas, and other areas incidental

Copyright National Fire Protection Association
Provided by IHS under license with NFPA
No reproduction or networking permitted without license from IHS
Not for Resale

to, and under the control of, the management of other occupancies, such as offices, fall under the 50-person limitation.

A small assembly use is occupancy of any room or space for assembly purposes by fewer than 50 persons in another occupancy that is incidental to such other occupancy and should be classified as part of the other occupancy and subject to the provisions applicable thereto.

Restaurants and drinking establishments with an occupant load of fewer than 50 persons should be classified as mercantile occupancies.

For special amusement buildings, see 16.4.7.

A.6.1.3.1 Educational occupancies include the following:

(1) Academies
(2) Kindergartens
(3) Schools

An educational occupancy is distinguished from an assembly occupancy in that the same occupants are regularly present.

A.6.1.4.1 Day-care occupancies include the following:

(1) Adult day-care occupancies, except where part of a health care occupancy
(2) Child day-care occupancies
(3) Day-care homes
(4) Kindergarten classes that are incidental to a child day-care occupancy
(5) Nursery schools

In areas where public schools offer only half-day kindergarten programs, many child day-care occupancies offer state-approved kindergarten classes for children who need full-day care. As these classes are normally incidental to the day-care occupancy, the requirements of the day-care occupancy should be followed.

A.6.1.5.1 Health care occupancies include the following:

(1) Hospitals
(2) Limited care facilities
(3) Nursing homes

Occupants of health care occupancies typically have physical or mental illness, disease, or infirmity. They also include infants, convalescents, or infirm aged persons.

A.6.1.7.1 Detention and correctional occupancies include the following:

(1) Adult and juvenile substance abuse centers
(2) Adult and juvenile work camps
(3) Adult community residential centers
(4) Adult correctional institutions
(5) Adult local detention facilities
(6) Juvenile community residential centers
(7) Juvenile detention facilities
(8) Juvenile training schools

See 21.1.1.4.

A.6.1.7.2 Chapter 21 addresses the residential housing areas of detention and correctional occupancies. Examples of uses other than residential housing include gymnasiums or industries.

A.6.1.8.1 Residential occupancies are treated as separate occupancies in this *Code* as follows:

(1) One- and two-family dwellings *(Chapter 22)*
(2) Lodging or rooming houses *(Chapter 23)*
(3) Hotels, motels, and dormitories *(Chapter 24)*
(4) Apartment buildings *(Chapter 25)*

A.6.1.8.1.1 Paragraph 22.1.1.2 limits the term *one- and two-family dwellings* to "buildings containing not more than two dwelling units in which each dwelling unit is occupied by members of a single family with not more than three outsiders." The *Code* does not define the term *family*. The definition of this term is subject to federal, state, and local regulations and might not be restricted to a person or a couple (two people) and their children. The following examples aid in differentiating between a single-family dwelling and a lodging or rooming house:

(1) An individual or a couple (two people) who rent a house from a landlord and then sublease space for up to three individuals should be considered a family renting to a maximum of three outsiders, and the house should be regulated as a single-family dwelling in accordance with Chapter 22.
(2) A house rented from a landlord by an individual or a couple (two people) in which space is subleased to 4 or more individuals, but not more than 16, should be considered and regulated as a lodging or rooming house in accordance with Chapter 23.
(3) A residential building that is occupied by 4 or more individuals, but not more than 16, each renting from a landlord, without separate cooking facilities, should be considered and regulated as a lodging or rooming house in accordance with Chapter 23.

A.6.1.8.1.3 So-called apartment hotels should be classified as hotels because they are potentially subject to the same transient occupancy as hotels. Transients are those who occupy accommodations for less than 30 days.

A.6.1.8.1.4 Rooms within dormitories intended for the use of individuals for combined living and sleeping purposes are guest rooms or guest suites. Examples of dormitories are college dormitories, fraternity and sorority houses, and military barracks.

A.6.1.9.1 The following are examples of facilities that are classified as residential board and care occupancies:

(1) Group housing arrangement for physically or mentally handicapped persons who normally attend school in the community, attend worship in the community, or otherwise use community facilities
(2) Group housing arrangement for physically or mentally handicapped persons who are undergoing training in preparation for independent living, for paid employment, or for other normal community activities
(3) Group housing arrangement for the elderly that provides personal care services but that does not provide nursing care
(4) Facility for social rehabilitation, alcoholism, drug abuse, or mental health problems that contains a group housing arrangement and that provides personal care services but does not provide acute care
(5) Assisted living facility
(6) Other group housing arrangements that provide personal care services but not nursing care

A.6.1.10.1 Mercantile occupancies include the following:

(1) Auction rooms
(2) Department stores
(3) Drugstores

--`,,```,,,,````-`-`,,`,,`,`,,`---

Copyright National Fire Protection Association
Provided by IHS under license with NFPA
No reproduction or networking permitted without license from IHS
Not for Resale

(4) Restaurants with a capacity of fewer than 50 persons
(5) Shopping centers
(6) Supermarkets

Office, storage, and service facilities incidental to the sale of merchandise and located in the same building should be considered part of the mercantile occupancy classification.

A.6.1.11.1 Business occupancies include the following:

(1) Air traffic control towers (ATCT)
(2) Ambulatory outpatient clinics
(3) City halls
(4) College and university instructional buildings, classrooms under 50 persons, and instructional laboratories
(5) Courthouses
(6) Dentists' offices
(7) Doctors' offices
(8) General offices
(9) Town halls

Doctors' and dentists' offices are included, unless of such character as to be classified as ambulatory health care occupancies.

Birth centers occupied by fewer than four patients, not including infants, at any one time; not providing sleeping facilities for four or more occupants; and not providing treatment procedures that render four or more patients, not including infants, incapable of self-preservation at any one time should be classified as business occupancies. For birth centers occupied by patients not meeting these parameters, see Chapter 19.

Service facilities common to city office buildings, such as newsstands, lunch counters serving fewer than 50 persons, barber shops, and beauty parlors, are included in the business occupancy group.

City halls, town halls, and courthouses are included in the business occupancy group insofar as their principal function is the transaction of public business and the keeping of books and records. Insofar as they are used for assembly purposes, they are classified as assembly occupancies.

A.6.1.12.1 Industrial uses that can be considered as low hazard industrial occupancies include the following:

(1) Beverages (nonalcoholic)
(2) Brick and masonry
(3) Ceramic
(4) Foundries
(5) Glass products
(6) Gypsum
(7) Ice
(8) Metal products (fabrication and assembly)
(9) Telecommuncations signal processing
(10) Telephone exchanges

Industrial uses that can be considered as industrial occupancies, other than those noted for low industrial hazard occupancies, include the following:

(1) Aircraft
(2) Appliances
(3) Athletic equipment
(4) Automobiles and other motor vehicles
(5) Bakeries
(6) Beverages (alcoholic)
(7) Bicycles
(8) Boat building
(9) Brooms or brushes
(10) Business machines
(11) Cameras and photo equipment
(12) Canvas or similar fabric
(13) Carpets and rugs (includes cleaning)
(14) Clothing
(15) Construction
(16) Disinfectants
(17) Drycleaning and dyeing
(18) Electric light plants and power houses
(19) Electronics
(20) Engines (including rebuilding)
(21) Food processing
(22) Furniture
(23) Hemp products
(24) Jute products
(25) Laundries
(26) Leather products
(27) Machinery
(28) Metals
(29) Millwork (sash and door)
(30) Motion pictures and television filming
(31) Motor vehicle repair garages
(32) Musical instruments
(33) Optical goods
(34) Paper mills or products
(35) Photographic film
(36) Plastic products
(37) Printing or publishing
(38) Recreational vehicles
(39) Refuse incineration
(40) Shoes
(41) Soaps and detergents
(42) Textiles
(43) Tobacco
(44) Trailers
(45) Upholstering
(46) Wood (distillation)
(47) Woodworking (cabinet making)

A.6.1.13.1 Storage uses that can be considered as low hazard storage occupancies include the following:

(1) Asbestos
(2) Beer or wine up to 12 percent alcohol in metal, glass, or ceramic containers
(3) Cement in bags
(4) Chalk and crayons
(5) Dairy products in nonwax-coated paper containers
(6) Dry cell batteries
(7) Electrical coils
(8) Electrical motors
(9) Empty cans
(10) Food products
(11) Foods in noncombustible containers
(12) Fresh fruits and vegetables in nonplastic trays or containers
(13) Frozen foods
(14) Glass
(15) Glass bottles, empty or filled with noncombustible liquids
(16) Gypsum board
(17) Inert pigments
(18) Ivory
(19) Meats
(20) Metal cabinets
(21) Metal desks with plastic tops and trim

Copyright National Fire Protection Association
Provided by IHS under license with NFPA
No reproduction or networking permitted without license from IHS
Not for Resale

(22) Metal parts
(23) Metals
(24) Mirrors
(25) Oil-filled and other types of distribution transformers
(26) Parking garages, open or enclosed
(27) Porcelain and pottery
(28) Sheds
(29) Stables
(30) Stoves
(31) Talc and soapstones
(32) Tanks
(33) Towers
(34) Washers and dryers

Storage uses that can be considered as storage occupancies, other than those noted for low hazard storage occupancies, include the following:

(1) Aerosols, Level 2 and Level 3
(2) Aircraft hangars
(3) Bags, cloth, burlap, and paper
(4) Bamboo and rattan
(5) Baskets
(6) Belting, canvas and leather
(7) Books and paper in rolls or packs
(8) Boots and shoes
(9) Buttons, including cloth covered, pearl, or bone
(10) Cardboard and cardboard boxes
(11) Clothing, woolen wearing apparel
(12) Cordage
(13) Furniture
(14) Furs
(15) Glues, mucilage, pastes, and size
(16) Grains
(17) Horns and combs, other than celluloid
(18) Leather
(19) Linoleum
(20) Lumber
(21) Petroleum warehouses for storage of lubricating oils with a flash point of 200°F (93°C) or higher
(22) Photo engravings
(23) Resilient flooring
(24) Silks
(25) Soaps
(26) Sugar
(27) Tires, bulk storage
(28) Tobacco, cigars, cigarettes, and snuff
(29) Upholstery and mattresses
(30) Wax candles

A.6.2.1.3 Examples of uses that might be incidental to another occupancy include the following:

(1) Newsstand (mercantile) in an office building
(2) Gift shop (mercantile) in a hotel
(3) Minor office space (business) in any occupancy
(4) Maintenance area (industrial) in any occupancy
(5) Small storage area (storage) in any occupancy

The *Code* does not specify a percentage of floor area to define an incidental use area. The establishment of a fixed percentage could result in too large an incidental area to ensure that the proper level of safety is provided. For example, if a 10 percent threshold was applied, a 500,000 ft^2 (46,500 m^2) warehouse might have up to 50,000 ft^2 (4650 m^2) of office space (with approximately 500 persons within the business use space) and would be subject only to the requirements applicable to a storage occupancy. This arrangement would not be safe. As described in this paragraph, it is the intent that these areas be incidental, minor areas within another occupancy.

A.6.2.1.3(2) Examples of uses that have occupant loads below the occupancy classification threshold levels include the following:

(1) Assembly use with fewer than 50 persons within a business occupancy
(2) Educational use with fewer than 6 persons within an apartment building

A.6.3.2 Hazardous materials are materials that present physical or health hazards and are regulated by the *Code*. The categories of materials classified as physical hazards, health hazards, or both have been established in concert with those categories identified by OSHA in 29 CFR that are used by preparers of Material Safety Data Sheets (MSDS). In some cases, the hazard categories are further subdivided into classes that have long been established by NFPA standards. For example, while OSHA recognizes flammable liquids as a broad class, including those that are combustible, such liquids are further categorized by building and fire codes with respect to degree of hazard under the system of classification used by NFPA to include Class I, Class II, and Class III liquids. They are further subdivided within these classes to Class IA, Class IB and so forth. A similar approach is used for materials in other categories where there are subcategories of hazard established by existing NFPA standards, including oxidizers, unstable reactives, organic peroxides, water reactives, and others.

Under the classification system used by OSHA, a hazardous material can have one or more physical or health hazards in categories not currently regulated by the *Code*; for example, irritants, sensitizers, radioactive materials, etiological agents, and others. This is not to say that these materials are not hazardous materials, but rather that the *Code* does not provide specific regulation for the hazard category represented.

The *Code* defines contents as either high hazard, low hazard, or ordinary hazard. The category of high hazard, which includes hazardous materials, is subdivided into groups in which the hazards of the groups are comparable, that is, high hazard Level 1-5. *(See also A.34.1.1.)*

A.6.3.2.1 These classifications do not apply to the application of sprinkler protection classifications. (*See* NFPA 13, *Standard for the Installation of Sprinkler Systems*.)

A.6.3.2.2 Chapter 30 recognizes storage of noncombustible materials as low hazard. In other occupancies, it is assumed that, even where the actual contents hazard is normally low, there is sufficient likelihood that some combustible materials or hazardous operations will be introduced in connection with building repair or maintenance, or some psychological factor might create conditions conducive to panic, so that the egress facilities cannot safely be reduced below those specified for ordinary hazard contents.

A.6.3.2.3 Ordinary hazard classification represents the conditions found in most buildings and is the basis for the general requirements of this *Code*.

The fear of poisonous fumes or explosions is necessarily a relative matter to be determined on a judgment basis. All smoke contains some toxic fire gases but, under conditions of ordinary hazard, there should be no unduly dangerous exposure during the period necessary to escape from the fire area, assuming there are proper exits.

Copyright National Fire Protection Association
Provided by IHS under license with NFPA
No reproduction or networking permitted without license from IHS
Not for Resale

A.6.3.2.4.1.3 Chapter 34 includes requirements for buildings and occupancies that contain high hazard contents. It introduces the concept of control areas, maximum allowable quantities, mercantile allowances, and quantity limitations for other occupancies.

A.7.1.5.2.5.6(B) The design limits of fire department apparatus should take into account mutual aid companies and other response agencies that might respond to emergencies. [**1:** A.18.2.3.4.6.2]

A.7.2.1.1 The system of designating types of construction also includes a specific breakdown of the types of construction through the use of arabic numbers. These arabic numbers follow the roman numeral notation where identifying a type of construction [for example, Type I(442), Type II(111), Type III(200)] and indicate the fire resistance rating requirements for certain structural elements as follows:

(1) First arabic number — exterior bearing walls
(2) Second arabic number — columns, beams, girders, trusses and arches, supporting bearing walls, columns, or loads from more than one floor
(3) Third arabic number — floor construction

Table A7.2.1.1 provides a comparison of the types of construction for various model building codes.

A.7.4.1.3.5.3(C) Where a process hazard analysis demonstrates that more than two occupants are necessary for operations to be conducted safely, an increase in the maximum number of occupants might be appropriate where acceptable to the AHJ.

A.7.4.1.3.7 See NFPA 850, *Recommended Practice for Fire Protection for Electric Generating Plants and High Voltage Direct Current Converter Stations*, for protection recommendations.

A.7.4.3.6.3 Special machinery and equipment can include rolling mills, structural metal fabrication shops and foundries, or the equipment necessary for the production and distribution of electric, gas, or steam power.

A.7.6.2.1 Where a building is adjacent to an open space of at least 20 ft (6100 mm) in width, minimum, the maximum permitted area found in Table 7.4.1 can be increased by an amount proportional to the open space. This increase is permitted because the open space might be used for escape from the building, for staging fire-fighting operations, and for reducing hazards from exposures. The wider this open space is, the more important its contribution to the safety of the building's occupants, fire fighters, and the building's contents. If the lot lines or other lines that define the open space are regular and parallel to each face of the building and at the same distance from the exterior wall of the building, Equation 7.2 and Equation 7.3 would be as follows:

$$l_f = \frac{\left\{100\left[\left(\frac{F}{P}\right) - 0.25\right]W\right\}}{30} \text{(U.S. units)} \quad \textbf{(A.7.6.2.1a)}$$

$$l_f = \frac{\left\{100\left[\left(\frac{F}{P}\right) - 0.25\right]W\right\}}{9} \text{(SI units)} \quad \textbf{(A.7.6.2.1b)}$$

where:
l_f = frontage area increase (percent)
F = sum of the building perimeter with a constant width (W) that is at least 20 ft (6100 mm)
P = building perimeter
W = width of public way or open space

However, if the width of the open space is irregular, or the lot line is not parallel to the building face, the individual units of open space are measured, and the width values (W) are inserted into Equation 7.6.2.1a and Equation 7.6.2.1b. Each individual section becomes F_{si}. Each F_{si} is computed as a ratio of the entire perimeter of the building, and each percent determined this way is further modified by the factor $W/30$ ($W/9$), where W is the width measured for that individual segment. The resulting percentages are summed, and 0.25 is subtracted from the sum, since every building is presumed to have its front open to some space and the main exit discharge is accounted for in other requirements of this *Code*. Thus, only open space in excess of that which is presumed to be necessary for the proper application of this *Code* and all of its components is considered to be contributory to the increased safety of occupants, emergency responders, and property. Where the lines are not parallel, or the width of the open space is not constant, the minimum width of all segments can be used in Equation A.7.6.2.1a and Equation A.7.6.2.1b for uniform dimensions, thereby simplifying the determination of the permitted area increase.

Table A.7.2.1.1 Cross-Reference of Building Construction Types

NFPA 5000	I(442)	I(332)	II(222)	II(111)	II(000)	III(211)	III(200)	IV(2HH)	V(111)	V(000)
UBC	—	I FR	II FR	II 1 hr	II N	III 1 hr	III N	IV HT	V 1 hr	V N
B/NBC	1A	1B	2A	2B	2C	3A	3B	4	5A	5B
SBC	I	II	—	IV 1 hr	IV UNP	V 1 hr	V UNP	III	VI 1 hr	VI UNP
IBC	—	IA	IB	IIA	IIB	IIIA	IIIB	IV	VA	VB

UBC: *Uniform Building Code*.
FR: Fire rated.
N: Nonsprinklered.
HT: Heavy timber.
B/NBC: *National Building Code*.
SBC: *Standard Building Code*.
UNP: Unprotected.
IBC: *International Building Code*.

Copyright National Fire Protection Association
Provided by IHS under license with NFPA
No reproduction or networking permitted without license from IHS
Not for Resale

A.7.6.2.3 Paragraph 7.6.2.3 exempts residential occupancies protected with a system in accordance with NFPA 13R, *Standard for the Installation of Sprinkler Systems in Residential Occupancies up to and Including Four Stories in Height*, because such buildings are limited to four stories in height by 7.5.2, and area increases are not permitted.

A.7.6.2.3.3 While the maximum area for mixed occupancy buildings is simply based on the most restrictive occupancy limitation, the calculation for buildings with separated occupancies is more complex. Because the area ratio described in 7.4.1.1.2.2 must be calculated for each story, the result for each story must be less than 1. Thus, each story is evaluated, and the sum of all allowable areas should not exceed that allowed for a three-story building. Figure A.7.6.2.3.3 shows an example of how the calculation should be used for a four-story building with separated uses, with an approved, electrically supervised automatic sprinkler system in accordance with NFPA 13, *Standard for the Installation of Sprinkler Systems*, and with open frontage on all sides.

The building is of Type II (111) construction. The building is 75,000 ft^2 per story and contains assembly, business, day care, and mercantile occupancies (1 ft = 0.3048 m; 1 ft^2 = 0.093 m^2). According to 7.6.2, each story is granted a 75 percent increase for open frontage and a 200 percent increase for automatic sprinklers. The resulting allowable areas for each occupancy are as follows:

(1) Assembly — 58,125 ft^2
(2) Business — 140,625 ft^2
(3) Day care — 99,375 ft^2
(4) Mercantile — 80,625 ft^2

The calculated ratios per story are as follows:

(1) Fourth story — 15,000/58,125 = 0.26
(2) Third story — 22,000/140,625 + 12,000/58,125 + 41,000/140,625 = 0.16 + 0.21 + 0.29 = 0.66
(3) Second story — 15,000/80,625 + 60,000/140,625 = 0.19 + 0.43 = 0.62
(4) First story — 15,000/80,625 + 6,000/99,375 + 15,000/140,625 + 25,000/80,625 + 14,000/58,125 = 0.19 + 0.06 + 0.11 + 0.31 + 0.24 = 0.91

Each story complies, since the sums are less than 1. The sum of the ratios for all stories is 0.26 + 0.66 + 0.62 + 0.91 = 2.45. The building complies, since the sum of all the ratios is less than 3.

A.7.6.2.3.4.2 Paragraph 7.6.2.3.4.2 increases the sum of the allowable area ratio for all stories to a maximum of four for residential occupancies protected with systems in accordance with NFPA 13R, *Standard for the Installation of Sprinkler Systems in Residential Occupancies up to and Including Four Stories in Height*, because such buildings are limited to four stories in height by 7.5.2, and area increases are not permitted.

A.8.1.2.1 Fire compartments are areas of a building separated from other areas of the building by fire barriers. Such fire barriers consist of fire barrier walls in single-story buildings or a combination of fire barrier walls and horizontal assemblies (floors or floor-ceiling assemblies) having the appropriate fire resistance rating in multistory buildings or buildings with a basement. Fire barriers are continuous fire separations with terminations at exterior walls, fire walls, another fire barrier, or the roof in order to constitute a complete fire separation.

A.8.2 NFPA 251, *Standard Methods of Tests of Fire Resistance of Building Construction and Materials*, ANSI/UL 263, *Standard for Fire Tests of Building Construction and Materials*, and ASTM E 119, *Standard Test Methods for Fire Tests of Building Construction and Materials*, are considered nationally recognized methods of determining fire resistance ratings and have been found to yield equivalent test results.

A.8.2.2.4.2.1 Fire resistance rated–glazing complying with 8.2.2.4.2.1, where not installed in a door, is considered a wall, not an opening protective.

A.8.2.3.2.1 The intent of this provision is to permit the provisions of either ASCE/SFPE 29, *Standard Calculation Methods for Structural Fire Protection*, or ACI 216.1/TMS 0216.1, *Standard Method for Determining Fire Resistance of Concrete and Masonry*, to be used for the calculation of fire resistance of concrete or masonry elements or assemblies.

A.8.3.1.1 Other loads, such as seismic loads or interior pressure differences due to wind, can govern and should be considered in accordance with local code requirements. Parapets should be designed for wind loads, including appropriate pressure coefficients. [**221:** A.4.2]

A.8.3.1.3 Double walls are very common with unprotected frames. The individual walls separate the building frame that laterally supports them from a fire exposure on the opposite side. However, collapse of the respective building frame and wall on the side of fire origin could occur within ½ hour or less. Table 8.3.1.3 estimates that about 1 hour will transpire between fire origin, collapse of the respective building frame and wall, and rekindling of the fire.

Table 8.3.1.3 is not intended to apply where the building frames are fire resistance rated and would not collapse in an uncontrolled fire. [**221:** A.4.5]

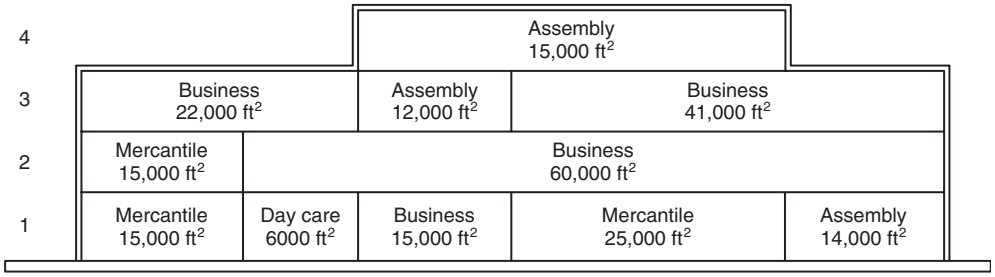

FIGURE A.7.6.2.3.3 Four Story Building Example

Copyright National Fire Protection Association
Provided by IHS under license with NFPA
No reproduction or networking permitted without license from IHS
Not for Resale

A.8.3.1.4 Where the potential exists for the collapse of building materials or contents or for any damage from the impact of vehicles on a wall, the wall should be constructed of materials that are of adequate strength. [**221:** A.4.6]

A.8.3.2.3 Walls intended to be used as cantilevered HC fire walls or fire walls in the future and used as temporary exterior walls will be vulnerable to wind damage. Such walls should be designed to resist required wind loads. If the future cantilevered wall is temporarily fastened to the building frame until the additional building is built, care should be taken to ensure that all ties to the wall are fully cut when new construction is completed. [**221:** A.5.3]

A.8.3.2.4 Tied HC fire walls or fire walls *[see Figure A.8.3.2.4(a)]* are fastened to and usually encase members of the structural frame of the building. To remain stable, the pull of the collapsing structural members on the fire side of the wall must be resisted by the strength of the structure on the other side. [**221:** A.5.4]

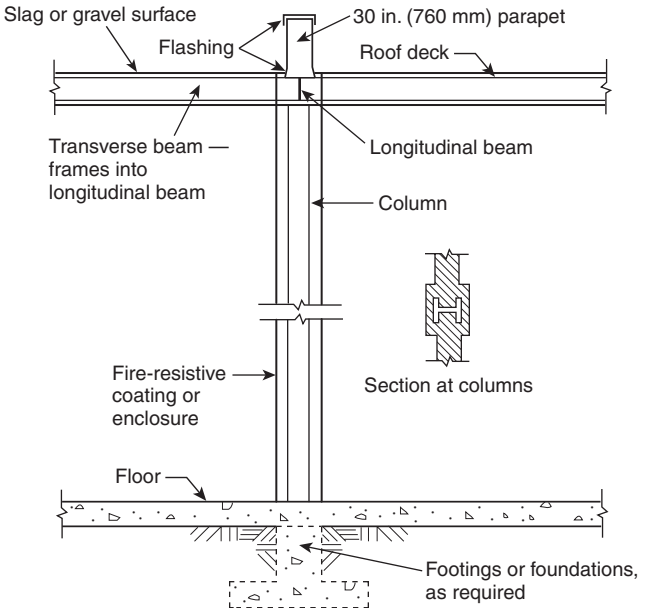

FIGURE A.8.3.2.4(a) Typical Tied HC Fire Wall or Fire Wall Used with Continuous Building Framework. [221: Figure A.5.4(a)]

Since a fire can occur on either side of the wall, the wall preferably should be located at the center of strength of the building frame. The center of strength is the plane within the building frame in which the structural framing on either side has equal resistance. In small structures, the center of strength generally is in the middle of the building *[see Figure A.8.3.2.4(b)]*. In large buildings, the center of strength might lie midway between two double-column line expansion joints *[see Figure A.8.3.2.4(c) and Figure A.8.3.2.4(d)]*. Single-column line expansion joints utilizing beams with slotted connections do not break the continuity of the building frame. *[See Figure A.8.3.2.4(e).]* [**221:** A.5.4]

Bolts with nuts and washers are permitted to be used to tie framework across a double-column line. In order to prevent the defeat of the purpose of the expansion joint created by the

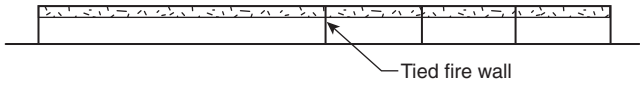

FIGURE A.8.3.2.4(b) A Tied Wall at the Center of a Continuous Steel Frame; Pull from Collapsing Steel on Either Side Must Be Resisted by Lateral Strength of Steel on Other Side. [221:Figure A.5.4(b)]

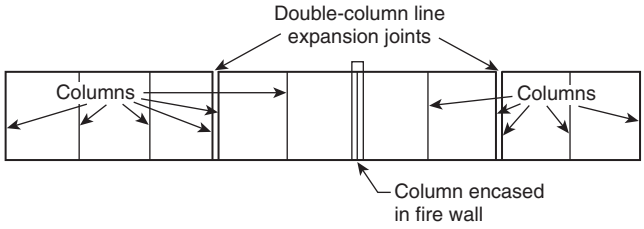

FIGURE A.8.3.2.4(c) Tied Wall Where Framing Is Not Continuous Throughout the Building. [221:Figure A.5.4(c)]

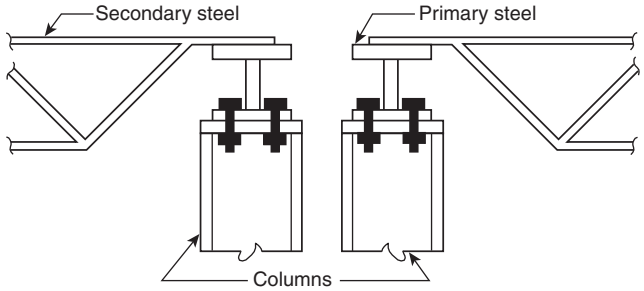

FIGURE A.8.3.2.4(d) Double-Column Line Expansion Joint. [221:Figure A.5.4(d)]

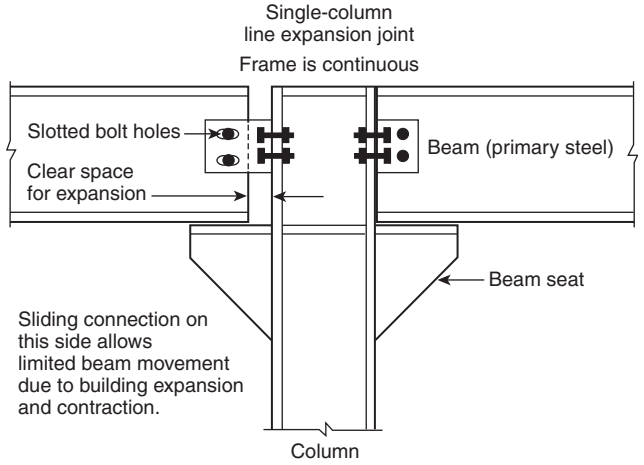

FIGURE A.8.3.2.4(e) Single-Column Line Expansion Joint Frame Is Continuous. [221:Figure A.5.4(e)]

Copyright National Fire Protection Association
Provided by IHS under license with NFPA
No reproduction or networking permitted without license from IHS
Not for Resale

double-column line, nuts should be backed off slightly about ¾ in. (19 mm). Where the primary roof framing is perpendicular to the HC fire wall or fire wall, two bolts should tie the roof framing together over each column to provide concentric load distribution. Where the primary roof framing is parallel to the HC fire wall or fire wall, single bolts are permitted to be used; however, intermediate ties might be needed between column lines. A registered civil or structural engineer should be consulted to provide more exact details. *[See Figure A.8.3.2.4(f) and Figure A.8.3.2.4(g).]* [**221:** A.5.4]

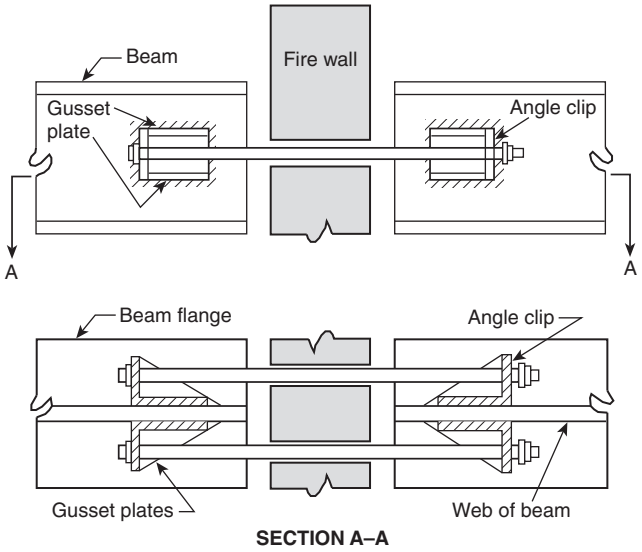

Note: Columns are needed but not illustrated.

FIGURE A.8.3.2.4(f) Through-Wall Tie — Primary Roof Framing Perpendicular to Wall. [221:Figure A.5.4(f)]

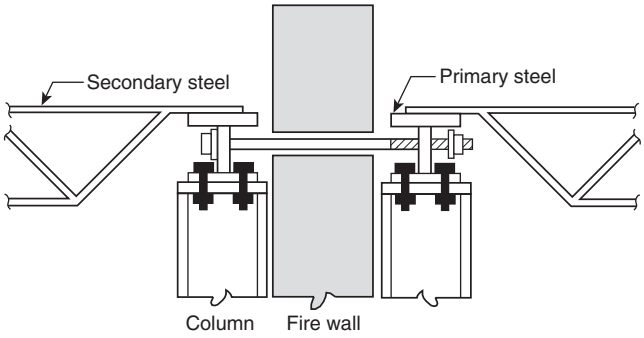

FIGURE A.8.3.2.4(g) Through-Wall Tie — Primary Steel Parallel to HC Fire Wall or Fire Wall. [221:Figure A.5.4(g)]

If the wall is not located at the center of strength, the lateral resistance of the frame on either side of the wall should be sufficient to resist the maximum horizontal component of the force that could result from collapsing structural framework on the opposite side. The horizontal force at each tie should be computed by using the following formula. [**221:** A.5.4]

$$H = \frac{wBL^2}{8S}$$

where:

H = horizontal pull per tie [lb (kg)]
w = dead load plus 25 percent of the live load of the roof [lb/ft^2 (kg/m^2)]
L = span of the structural member running perpendicular to the wall [ft (m)]
B = distance between ties [ft (m)]
S = sag in ft (m) that can be assumed as: 0.07L for open-web trusses; 0.09L for solid beams; 0.06L for wood trusses.

[See Figure A.8.3.2.4(h).] [**221:** A.5.4]

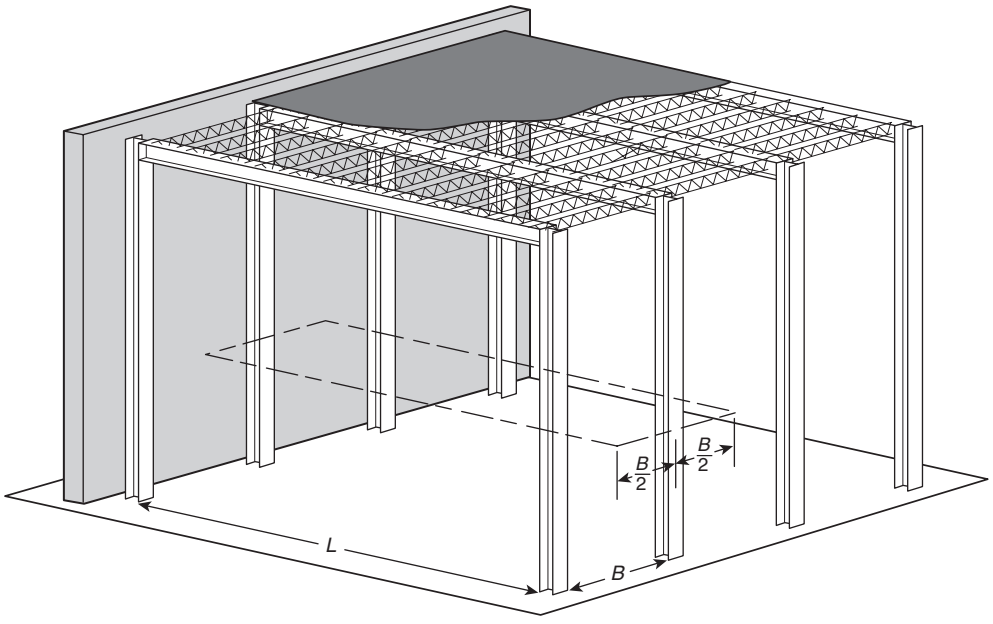

FIGURE A.8.3.2.4(h) Tied HC Fire Wall or Fire Wall with Ties at Each Beam. [221:Figure A.5.4(h)]

Copyright National Fire Protection Association
Provided by IHS under license with NFPA
No reproduction or networking permitted without license from IHS
Not for Resale

A.8.3.2.5 Figure A.8.3.2.5(a), Figure A.8.3.2.5(b), and Figure A.8.3.2.5(c) provide three configurations for construction of a double HC fire wall or fire wall. [**221:** A.5.5]

Where there is an uncontrolled fire on either side of a double HC fire wall or fire wall, one building frame will collapse, pulling the wall on that side with it. The other wall, supported by structural framework on the protected side, will remain in place to stop the spread of fire. [**221:** A.5.5]

Since there should be no connections between the walls, particular attention should be paid to the details at openings in the walls. [**221:** A.5.5]

A double HC fire wall or fire wall is most adaptable where an addition to a plant requires an HC fire wall or fire wall between an existing structure and a new building. The existing wall, which is secured to the building frame, is altered, if necessary, to provide the proper fire resistance. Another HC fire wall or fire wall is then constructed adjacent to the existing one and secured to the new building frame. [**221:** A.5.5]

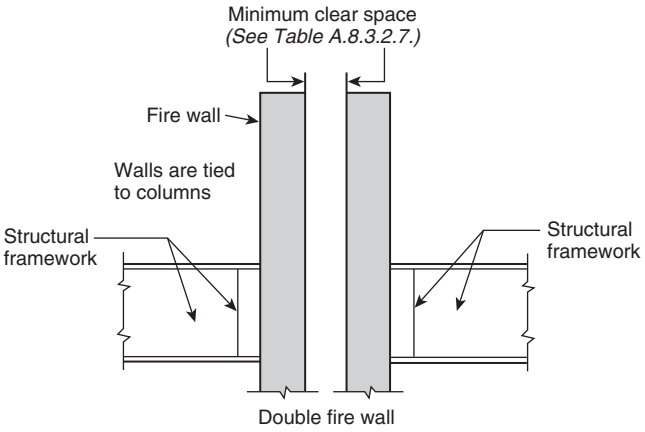

FIGURE A.8.3.2.5(a) Double HC Fire Wall or Fire Wall — No Connections. [221: Figure A.5.5(a)]

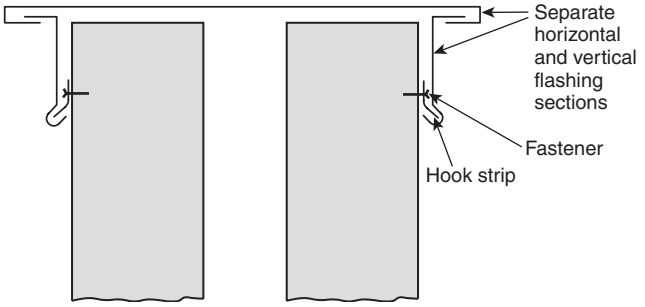

FIGURE A.8.3.2.5(b) Double HC Fire Wall or Fire Wall — Separate Horizontal and Vertical Flashing Sections. [221: Figure A.5.5(b)]

A.8.3.2.6.1 See Figure A.8.3.2.6.2(a). [**221:** A.5.6.1]

A.8.3.2.6.2 The exterior fire-rated wall above the cantilevered wall should not overlap the cantilevered wall on the side of the lower building. It can be installed above the cantilevered wall or overlap the cantilevered wall on the side of the higher building *[see Figure A.8.3.2.6.2(a) and Figure A.8.3.2.6.2(b)]*. In either case, the integrity of the fire resistance rating of the HC fire wall should be maintained by protecting the joint between the cantilevered wall and the exterior HC fire wall attached to the higher building. In some cases, the parapet can be omitted from the higher wall only; however, such an omission should consider the severity of exposure from the occupancy in the lower building and the elevation difference between the exposure and the top of the higher wall. [**221:** A.5.6.2]

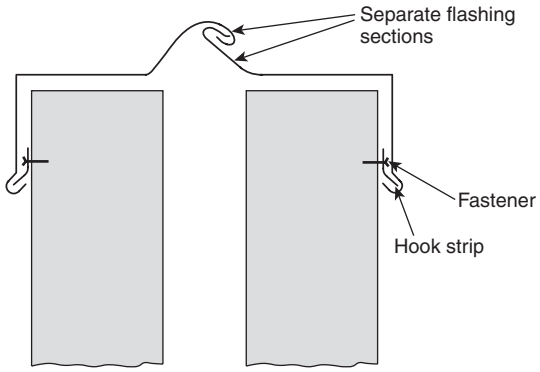

FIGURE A.8.3.2.5(c) Double HC Fire Wall or Fire Wall — Separate Flashing Sections. [221: Figure A.5.5(c)]

A.8.3.2.7 Table A.8.3.2.7 is based on steel framework. This table provides clearances that are conservative for other types of framework materials. It is based on an average temperature of 800°F (427°C) in two adjacent bays. [**221:** A.5.7]

Adequate clearance should be provided between storage and HC fire walls or fire walls to prevent damage to the wall that might result from swelling of absorbent materials due to contact with water. [**221:** A.5.7]

A.8.3.2.8.3 Figure A.8.3.2.8.3(a) and Figure A.8.3.2.8.3(b) show two methods of arranging a means of egress through an HC fire wall. [**221:** A.5.8.3]

Table A.8.3.2.7 Minimum Recommended Clearance for Thermal Expansion Between Unprotected Structural Framework and HC Fire Walls or Fire Walls or Between Double HC Fire Walls

Length of Bay Perpendicular to the HC Fire Wall or Fire Wall		Minimum Clearance Between Wall and Structural Framework and Between Double Walls	
ft	mm	in.	mm
20	6,100	2½	64
25	7,600	3¼	83
30	9,100	3¾	95
35	10,700	4½	114
40	12,200	5	127
45	13,700	5¾	146
50	15,200	6¼	159
55	16,800	7	178
≥60	18,300	7½	191

Source: FM DS 1–22, *Criteria for Maximum Forseeable Loss Fire Walls and Space Separations.* [**221:** Table A.5.7]

Copyright National Fire Protection Association
Provided by IHS under license with NFPA
No reproduction or networking permitted without license from IHS
Not for Resale

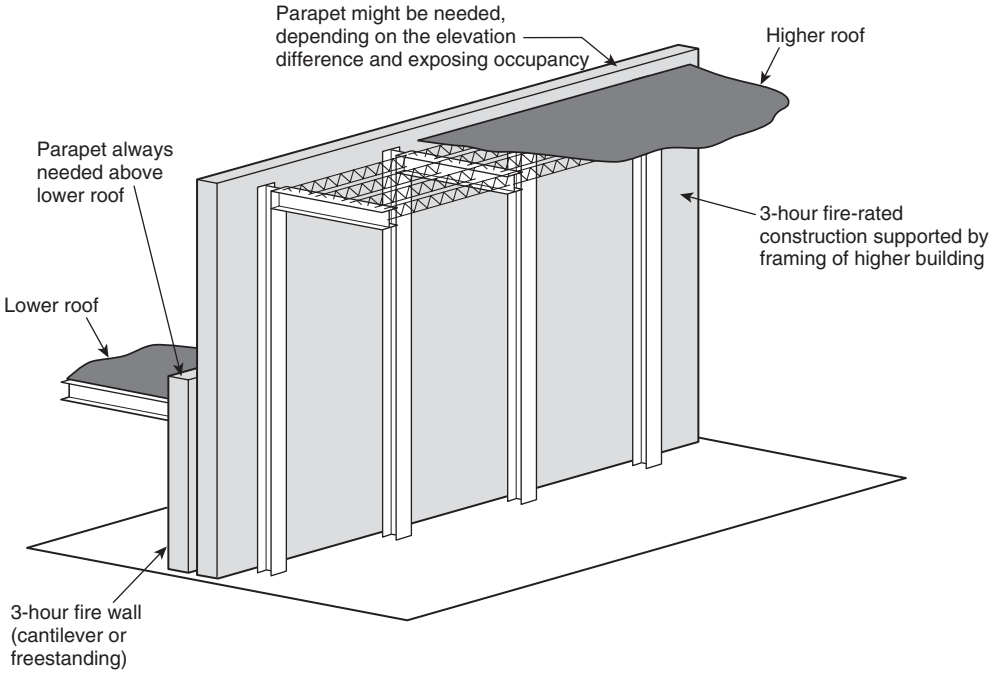

FIGURE A.8.3.2.6.2(a) HC Fire Wall or Fire Wall Arrangement at Elevation Difference (Double Wall). [221: Figure A.5.6.2(a)]

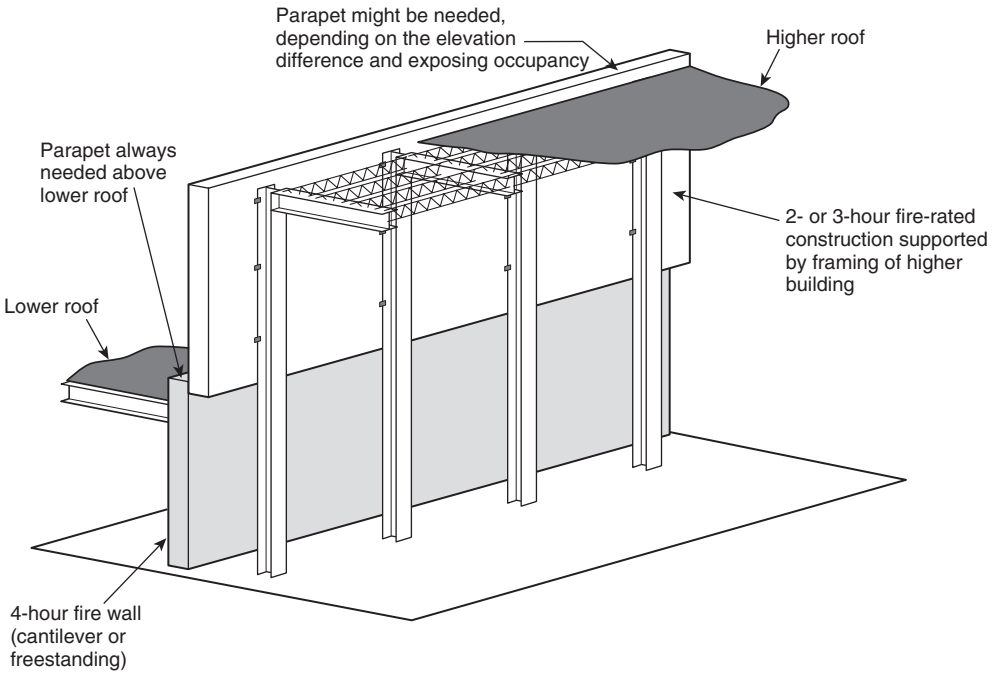

FIGURE A.8.3.2.6.2(b) HC Fire Wall or Fire Wall Arrangement at Elevation Difference (Cantilever Wall). [221: Figure A.5.6.2(b)]

--`,,```,,,,````-`-`,,`,,`,`,,`---

Copyright National Fire Protection Association
Provided by IHS under license with NFPA
No reproduction or networking permitted without license from IHS
Not for Resale

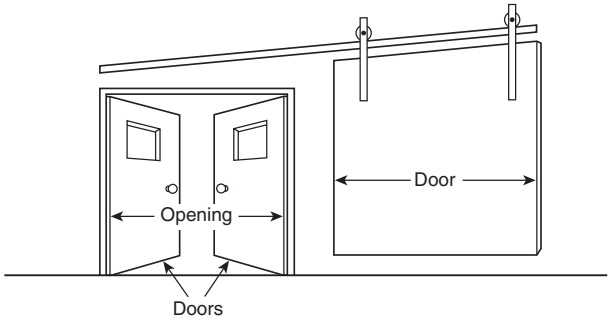

FIGURE A.8.3.2.8.3(a) Swinging Door and Sliding Door Configuration for Egress Purposes in an HC Fire Wall. [221: Figure A.5.8.3(a)]

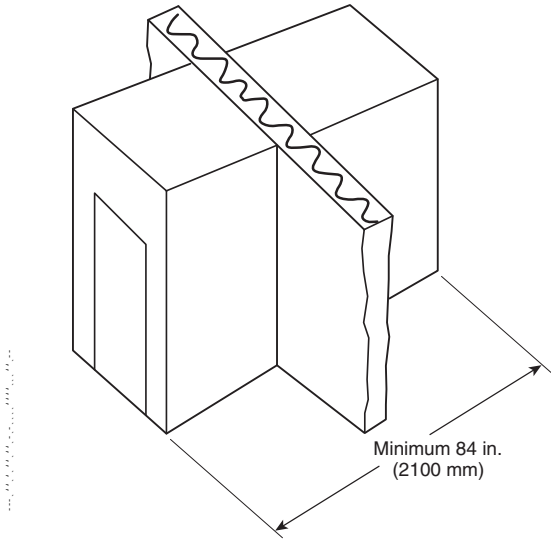

FIGURE A.8.3.2.8.3(b) Vestibule Arrangement for Egress Purposes in an HC Fire Wall. [221: Figure A.5.8.3(b)]

A.8.3.2.8.4 An example of an arrangement where the alternative of providing two fire doors on a freestanding, fire-resistive vestibule is used and where the opening is used as part of the means of egress is shown in Figure A.8.3.2.8.3(b). Where this alternative is used and where the opening is used for egress, the vestibule should be long enough to allow both doors to swing in the same direction and open completely. [**221:** A.5.8.4]

An example of an arrangement where the alternative of providing two fire doors on a freestanding, fire-resistive vestibule is used and where the opening is not used as part of the means of egress is shown in Figure A.8.3.2.8.4. [**221:** A.5.8.4]

A.8.3.2.8.5 Limited guidance on protection used where material handling systems penetrate HC fire walls or fire walls can be found in NFPA 80, *Standard for Fire Doors and Fire Windows.* Additional guidance can be found in FM Global Loss Prevention Data Sheet 1-23. [**221:** A.5.8.5]

A.8.3.2.9 Combustibles should be kept at least 12 in. (305 mm) away from pipes, ducts, plates, and raceways where they penetrate the wall. Alternatively, a penetration seal with a T rating (as defined by ASTM E 814, *Standard Test Method for Fire Tests of Through-Penetration Fire Stops*) of not less than 1 hour should be provided. [**221:** A.5.9]

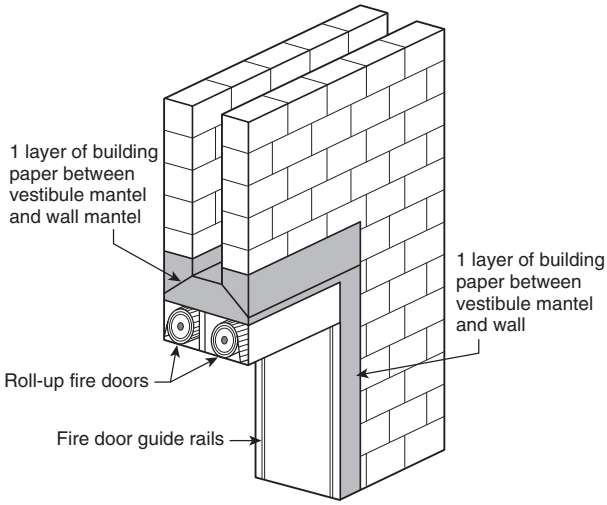

FIGURE A.8.3.2.8.4 Double Doors on a Freestanding Vestibule. [221:Figure A.5.8.4]

Mechanical connections, such as double-threaded elbows *(see Figure A.8.3.2.9)* or flexible-braided steel pipe, that are acceptable to the authority having jurisdiction and that will limit stress on the wall should be considered. [**221:** A.5.9]

Steel-faced HC fire walls with gypsum board core or gypsum board on stud HC fire walls should be provided with a concrete stanchion where pipes, raceways, or cables penetrate HC fire walls. [**221:** A.5.9]

A.8.3.2.9.4 The reason for this alternative is to prevent building collapse near the fire wall that could transfer forces to the HC fire wall via wall penetrations. Where it is not intended to provide fire resistance for structural framework for the entire building that is at least equal to that of the fire wall, providing such protection within the first two bays of the building immediately on each side of the HC fire wall will meet the intent of this alternative. [**221:** A.5.9.4]

A.8.3.2.11 High hazard materials transported by piping or ductwork passing through HC fire walls have been shown to be a significant avenue of fire propagation across the HC fire wall and should be avoided. Where necessary for these systems to penetrate an HC fire wall with a fire resistance rating of less than 4 hours, the flow of the high hazard materials must be interrupted or otherwise protected by engineered devices or systems specifically designed for such purpose and approved by the authority having jurisdiction. Devices that can be used for this protection include, but are not limited to, excess-flow valves and fire-safe shutoff valves, pneumatic knife or gate dampers, blower/vacuum shutdown devices, or encapsulation of the piping or ductwork and its supports with material having a fire resistance rating at least equal to that required of the HC fire wall. [**221:** A.5.11]

High hazard materials include flammable gases and combustible and flammable liquids used in piping systems and combustible dusts used in air-conveying systems. [**221:** A.5.11]

A.8.3.2.12 Where a higher building or higher portion of a building adjoins a lower building at an HC fire wall, the lower building should always have a minimum 30 in. (760 mm) high

Copyright National Fire Protection Association
Provided by IHS under license with NFPA
No reproduction or networking permitted without license from IHS
Not for Resale

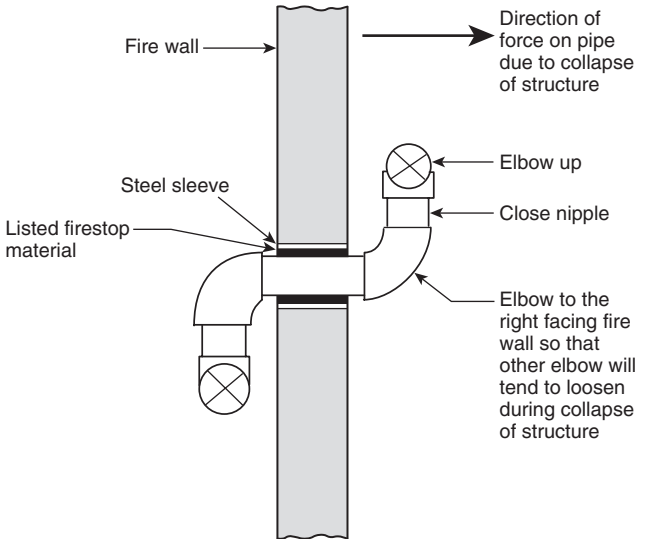

FIGURE A.8.3.2.9 Pipe Penetration. [221:Figure A.5.9]

parapet. A parapet can be omitted on the higher building if there is at least a 15 ft to 50 ft (4.6 m to 15.2 m) elevation difference, depending on the severity of the fire exposure from the lower building *(also, see* NFPA 80A, *Recommended Practice for Protection of Buildings from Exterior Fire Exposures, Table 2.4)*. Where the parapet is not needed, the exterior fire-rated wall construction should extend at least up to the gravel stop. Gravel surfacing or equivalent is still recommended for at least 25 ft (7600 mm) from the HC fire wall in each direction on the higher and lower roof. [**221:** A.5.12]

A.8.3.2.12.3 For example: If the HC fire wall has a 3-hour fire resistance rating, the structural columns, beams, and girders have a fire resistance rating of 3 hours. *(See Figure A.8.3.2.12.3.)* [**221:** A.5.12.3]

A.8.3.2.13 For existing construction where the roof strength is not adequate to support gravel surfacing, the roof should be structurally reinforced to support the gravel. As an alternative, or for new or existing construction where the roof slope is excessive for gravel, the roof should be coated with an approved, lightweight, exterior grade, fire-resistant coating. [**221:** A.5.13]

For single-ply roofs, where the roof is not adequate to support the specified weight of the ballast stone or paver blocks, it should be similarly reinforced, or the top surface of the roof should be protected with an approved coating, as described previously, if the roof membrane is totally adhered. Mechanically attached, single-ply roof covers normally flex between fasteners, which could cause cracking of a coating. [**221:** A.5.13]

A.8.3.2.13.2 For buildings within hurricane-prone areas as defined by ASCE/SEI 7, *Minimum Design Loads for Buildings and Other Structures*, the presence of roof gravel or slag is not desirable as it can become wind-borne debris in a high wind event. In such cases, and where acceptable to the authority having jurisdiction, gravel or slag should be embedded into a double flood coat of asphalt or coal-tar to ensure full embedment. After cooling, any loose gravel or slag should be removed from the roof. [**221:** A.5.13.2]

A.8.3.2.14 Where the specified separation is not practical, a minimum of 25 ft (7600 mm) of separation should be provided, and fire-rated barriers should be constructed on the exposed side of the roof projection. The fire resistance rating should be a minimum of 2 hours if a 4-hour HC fire wall is required and 1 hour where HC fire walls of 3 hours or less are required. [**221:** A.5.14]

A.8.3.2.16.2.1 An example of such an end wall configuration is a 4-hour HC fire wall with 2-hour end walls. [**221:** A.5.16.2]

A.8.3.3.2.3 Other loads, such as seismic loads or interior pressure differences due to wind, can govern and should be considered in accordance with local code requirements. Parapets should be designed for wind loads, including appropriate pressure coefficients. [**221:** A.4.2]

A.8.3.3.2.4 Where the potential exists for the collapse of building materials or contents or for damage from the impact of vehicles on a wall, the wall should be constructed of materials that are of adequate strength. [**221:** A.4.6]

A.8.3.3.3 For additional guidance on the design of cantilevered fire walls to provide structural stability, see A.8.3.2.3 Cantilevered fire walls are also known as freestanding fire walls. [**221:** A.6.3]

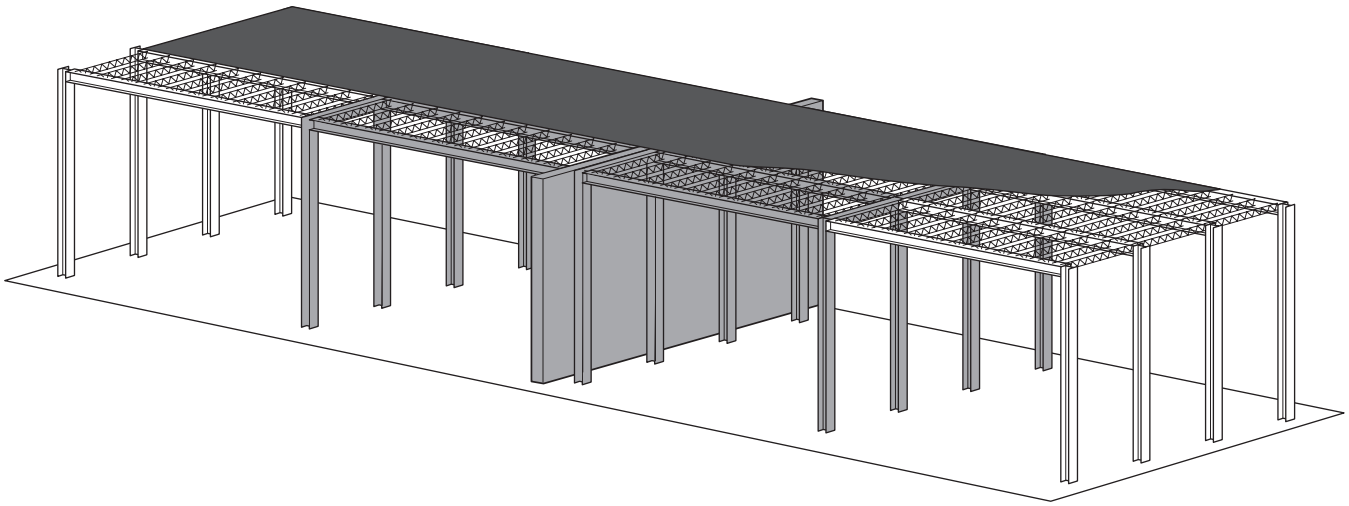

FIGURE A.8.3.2.12.3 Three-Hour HC Fire Wall. [221:Figure A.5.12.3]

Copyright National Fire Protection Association
Provided by IHS under license with NFPA
No reproduction or networking permitted without license from IHS
Not for Resale

A.8.3.3.4 For additional guidance on the design of tied fire walls to provide structural stability, see A.8.3.2.4. [**221:** A.6.4]

A.8.3.3.5 For additional guidance on the design of double fire walls to provide structural stability, see A.8.3.2.5. [**221:** A.6.5]

A.8.3.3.5.4 Double walls are very common with unprotected frames. The individual walls separate the building frame that laterally supports them from a fire exposure on the opposite side. However, collapse of the respective building frame and wall on the side of fire origin could occur within ½ hour or less. Table 8.3.3.5.4 estimates that about 1 hour will transpire between fire origin, collapse of the respective building frame and wall, and rekindling of the fire.

Table 8.3.3.5.4 is not intended to apply where the building frames are fire resistance rated and would not collapse in an uncontrolled fire. [**221:** A.4.5]

A.8.3.3.8.1 See A.8.3.2.7. [**221:** A.6.8.1]

A.8.3.3.10.3 See A.8.3.2.8.4. [**221:** A.6.10.3]

A.8.3.3.10.4 See A.8.3.2.8.5. [**221:** A.6.10.4]

A.8.4.2 Other loads, such as seismic loads or interior pressure differences due to wind, can govern and should be considered in accordance with local code requirements. Parapets should be designed for wind loads, including appropriate pressure coefficients. [**221:** A.4.2]

A.8.4.3 Where the potential exists for the collapse of building materials or contents or for damage from the impact of vehicles on a wall, the wall should be constructed of materials that are of adequate strength. [**221:** A.4.6]

A.8.4.4.4 The fire resistance rating of the fire barrier wall is based on specific criteria in NFPA 251, *Standard Methods of Tests of Fire Resistance of Building Construction and Materials*. It is based on both structural stability under the fire and hose stream tests and on criteria for temperature transmission through the wall that are designed to prevent ignition of combustible materials on the unexposed side of the wall. The exception recognizes that fire barrier walls can terminate at the underside of an individually protected structural member that has the same fire resistance rating as the wall. In the case where the fire resistance rating for the structural member is the same as that for the wall, no additional temperature transmission criteria are needed to prevent ignition of combustible materials.

However, in the event that the structural member does not have a solid web or solid surface along its length for the full height of the structural member, as with an open-web member, the fire protective covering for the structural member must be continuous for the full height of the structural member, to prevent the passage of flame and hot gases over the top of the fire barrier wall. [**221:** A.7.2.4]

A.8.7.3 Any door that is required to be self-closing or automatic-closing by NFPA *101*, *Life Safety Code*, cannot be held open with a fusible link or similar device. It is recognized that this *Code* requires some doors to be self-closing or automatic-closing where fusible link devices might be acceptable, such as for area separations or for separation of building construction types. Paragraph 8.7.3.1 allows doors to be self-closing or automatic-closing by any device, including fusible links, acceptable to NFPA 80, *Standard for Fire Doors and Fire Windows*. However, 8.7.3.2 clarifies that doors typically required by NFPA *101* to be self-closing or automatic-closing can be held open only if released by smoke detection as outlined in 11.2.1.8.2. This requirement would typically apply to doors in exit enclosures, horizontal exits, vertical opening enclosures, smoke barriers, occupancy separations, and most hazardous area enclosures and corridor walls required to be fire rated or to resist the passage of smoke, unless exempted by the appropriate occupancy chapter.

A.8.7.5.2 Some doors and glazing assemblies have been tested to meet the conditions of acceptance of NFPA 251, *Standard Methods of Tests of Fire Endurance of Building Construction and Materials*. Where such assemblies are used, the provisions of Section 8.3 or Section 8.4 should be applied instead of those of 8.7.5.2.

NFPA 252, *Standard Methods of Fire Tests of Door Assemblies*, and UL 10C, *Standard for Positive-Pressure Fire Tests of Door Assemblies*, are considered nationally recognized methods of determining fire protection ratings and have been found to yield equivalent test methods for side-hinged or pivoted-swinging doors. NFPA 252 and UL 10B, *Standard for Fire Tests of Door Assemblies*, are considered nationally recognized methods of determining fire protection ratings and have been found to yield equivalent test results for other types of doors.

A.8.7.9 Some doors and glazing assemblies have been tested to meet the conditions of acceptance of NFPA 251, *Standard Methods of Tests of Fire Endurance of Building Construction and Materials*. Where such assemblies are used, the provisions of Section 8.3 or Section 8.4 should be applied instead of those of 8.7.5.2.

A.8.8.2.2.1(1) Penetrations of fire barriers or smoke barriers required to have a fire resistance rating (wall, floor, and floor-ceiling and roof-ceiling assemblies) should be contained or should be tested for a period of time not less than the fire resistance rating of the assembly penetrated under a minimum positive pressure differential of 0.01 in. water column (2.5 Pa) in accordance with one of the following:

(1) Tested in accordance with ASTM E 814, *Standard Test Method for Fire Tests of Through-Penetration Fire Stops*
(2) Tested in accordance with NFPA 251, *Standard Methods of Tests of Fire Endurance of Building Construction and Materials*, as part of the fire rated assembly
(3) Tested in accordance with UL/ANSI 1479, *Standard for Fire Tests of Through-Penetration Fire Stops*
(4) Contained in a fire resistance–rated shaft enclosure

The suitability of a specific type of firestop system for the assembly penetrated should be determined in accordance with the construction conditions, the manufacturer's installation requirements, and its listing.

ASTM E 814 defines hourly ratings for firestop systems, which are explained in the following paragraphs.

The F rating criterion prohibits flame-through and requires an acceptable hose stream performance. An F rating equal to the assembly penetrated should be required in order to limit the spread of fire.

The T rating criterion measures the temperature rise on the unexposed surface of the wall or floor assembly, on the penetrating item, and on the firestop material; it also requires an acceptable hose stream performance. Where penetrating items through floors are located outside a wall cavity, the temperature (or T rating) of the firestop system should not exceed 325°F (181°C) above ambient where the penetrating item will come into contact with combustible materials.

The L rating criterion (as established in UL 1479) determines the amount of air leakage in cubic feet per minute per

Copyright National Fire Protection Association
Provided by IHS under license with NFPA
No reproduction or networking permitted without license from IHS
Not for Resale

square foot (cubic meters per minute per square meter) of opening through the firestop system at ambient temperature and at 400°F (204°C) at an air pressure differential of 0.30 in. water column (75 Pa). The L rating provides information regarding the suitability of the firestop system for use in a smoke barrier or smoke partition where such assemblies are used to limit the migration of smoke as required by other sections of this *Code*. Although no specific acceptability requirements are established by any standard, such air leakage (smoke) limitations might be established by the designer or other sections of this *Code*.

Where this *Code* permits the use of concrete, mortar, or grout as a firestop material for dynamic piping systems that expand and contract, provisions might be needed to protect the piping from corrosion or chafing.

Pipes and tubes carrying hazardous materials might require additional protection.

NFPA 70, *National Electrical Code*, contains requirements for installation and percentage of electrical conductor fill for conduit, cable trays, and other electrical conductor raceways, which also affect the requirements for each type of electrical penetration and the suitability of the firestop system. The 1-hour T rating might not be suitable in electrical through-penetrations such as bus bars, bus ducts, or cable trays where the effect of ampacity reduction has not been investigated.

A.8.8.8.2 In engineered smoke management systems, the designer should consider the use of high-temperature links on fire dampers where air-handling ducts penetrate fire barriers.

A.8.8.8.5 For smoke control systems, see NFPA 92A, *Recommended Practice for Smoke-Control Systems*.

A.8.9 Expansion joints are usually found only in buildings that are at least 200 ft (61 m) in length or width, or both, and that are of steel or concrete construction. They are provided to permit the separate portions of the structural frame to expand and contract with temperature and moisture changes without adversely affecting the building's structural integrity or serviceability. Expansion joints can usually be identified by the following characteristics:

(1) Double row of columns
(2) Width of 1 in. to 3 in. (25 mm to 75 mm)

Seismic joints might be found in buildings other than those that are rectangular in plan (for example, L- and T-shaped buildings) in areas where the risk of an earthquake is moderate to high. Such joints in multistory buildings can be as much as 12 in. (305 mm) in width. They are provided to allow the separate portions of the building to act independently of each other to undergo differential lateral displacement when an earthquake occurs.

With expansion or seismic joints, consideration should be given to the ability of the protecting system to remain in place and perform its intended function after repeated movements of the joints, and with the width of the joint varying from its maximum to minimum width. In the case of seismic joints, the protection system might be damaged during an earthquake that otherwise is not strong enough to cause major structural damage to the building. Therefore, it is necessary to conduct an inspection of those joints after an earthquake.

Methods of protecting expansion or seismic joints include the use of a steel plate cover that is attached to the floor on the side of the joint and is free to slide on the other side, or an elastomeric sealant tested for fire resistivity and expansion/contraction capability. Two methods of determining the fire resistance rating of expansion and seismic joints include testing in accordance with UL 2079, *Standard for Test for Fire Resistance of Building Joint Systems*, or ASTM E 1966, *Standard Test Method for Fire Resistive Joint Systems*.

Expansion joints and seismic joints should not be confused with control or construction joints.

Control joints are normally found in concrete or masonry wall and concrete slabs on grade. They are provided to (1) prevent cracking of the wall or slab due to excessive tensile forces in the concrete or masonry caused by shrinkage upon drying, or (2) induce cracking caused by drying shrinkage at a predetermined location; hence, the term *control joint*.

Construction joints are used as stopping and starting points for two successive concrete placement (pours) in walls, floors, and beams. Since a construction joint must be designed to transfer load across the joints, separation due to thermal- or moisture-induced movements is not anticipated.

Two other types of linear openings occur in fire barriers at (1) the intersection at the top of a wall and the underside of the floor or roof above (that is, head of wall), and at (2) the intersection at the perimeter of a floor of a fire-rated or non-fire-rated exterior wall assembly. Both of these lineal openings might be several inches wide and can be subject to movement induced by thermal expansion, wind loads, and live and dead loads. Appropriate protection is critical to the fire-resistive integrity and continuity of the floor or wall assembly. A fire resistance–rated perimeter joint system designed and tested for these locations should be securely installed in or on the intersection for its entire length, so as not to dislodge, loosen, or otherwise impair its ability to accommodate expected building movements.

A.8.9.3.1 The provisions of 8.9.3 are intended to restrict the interior vertical passage of flame and hot gases from one floor to another at the location where the floor intersects the exterior wall assembly. The requirements of 8.9.3 mandate sealing the opening between a floor and an exterior wall assembly to provide the same fire performance as that required for the floor. ASTM E 2307 is a test method for evaluating the performance of perimeter fire barrier systems. Some laboratories have tested and listed perimeter fire barrier systems essentially in accordance with the ASTM method. The ASTM test method evaluates the performance of perimeter fire barrier systems in terms of heat transfer and fire spread inside a building through the floor/exterior wall intersection. The test method does not assess the ability of perimeter fire barrier systems to prevent the spread of fire from story to story via the exterior.

It is acknowledged that, when a fire grows to full room size (post flashover) in a multistory building, the fire might spread from the story of origin to the story above via the exterior. The phenomenon of exterior flame spread from window to window is sometimes referred to as a "leapfrog" effect. The leapfrog effect can occur in buildings with non-fire resistance–rated exterior walls, as well as in buildings with fire resistance–rated exterior walls having unprotected window openings on adjacent stories. Fire experience indicates that fire spread beyond the story of origin via the exterior can occur in 15 minutes to 20 minutes or less without fire department intervention.

The leapfrog effect is addressed in 37.1.4 by requiring that windows on adjacent stories be separated vertically a minimum of 36 in. (915 mm) by a 1-hour fire resistance–rated spandrel or exterior wall assembly or that a 30 in. (760 mm) 1-hour fire resistance–rated flame barrier, or "eyebrow,"

--`,,```,,,,````-`-`,,`,,`,`,,`---

Copyright National Fire Protection Association
Provided by IHS under license with NFPA
No reproduction or networking permitted without license from IHS
Not for Resale

project horizontally from the exterior facade between the windows. These measures are typically applied to buildings greater than three stories. However, actual fire experience has shown that a 36 in. (915 mm) spandrel might not be sufficient to prevent fire spread via the exterior from window to window. However, the requirements for 1-hour fire resistance–rated spandrels or eyebrows are traditionally waived in buildings protected by automatic sprinklers, and most high-rise buildings are equipped with automatic sprinklers.

In summary, fire safety in high-rise buildings is largely dependent on the successful operation of automatic sprinklers. In the rare case where automatic sprinklers fail to control a fire, and a fire grows to a large size (post flashover) in a multistory building and is located in a compartment bounded by an exterior wall, and the building is equipped with either non-fire-rated protected windows on adjacent stories or a non-fire resistance–rated exterior wall, fire might spread via the exterior to the story above the floor of fire origin in 15 minutes to 20 minutes. Experience has shown that fire spread via the exterior due to the leapfrog effect is relatively rare. However, under the conditions previously enumerated, such fire spread can even occur in buildings having floor/exterior wall intersections protected by perimeter fire barrier systems tested and fire resistance rated in accordance with the ASTM test method.

A.8.10.1 Although a smoke partition is intended to limit the free movement of smoke, it is not intended to provide an area that would be free of smoke.

A.8.10.2(2) An architectural, exposed, suspended-grid acoustical tile ceiling with penetrations for sprinklers, ducted HVAC supply and return air diffusers, speakers, and recessed light fixtures is capable of limiting the transfer of smoke.

A.8.10.3.4 Gasketing of doors should not be necessary, as the clearances in NFPA 80, *Standard for Fire Doors and Fire Windows*, effectively achieve resistance to the passage of smoke if the door is relatively tight-fitting.

A.8.11.1 Although a smoke barrier is intended to restrict the movement of smoke, it might not result in tenability throughout the adjacent smoke compartment. The adjacent smoke compartment should be safer than the area on the fire side, thus allowing building occupants to move to that area. Eventually, evacuation from the adjacent smoke compartment might be required.

Wherever smoke barriers and doors therein require a degree of fire protection, as specified by requirements in the various occupancy chapters (Chapters 16 through 30), the construction should be a fire barrier that has been specified to limit the spread of fire and restrict the movement of smoke.

A.8.11.2 To ensure that a smoke barrier is continuous, it is necessary to seal completely all openings where the smoke barrier abuts other smoke barriers, fire barriers, exterior walls, the floor below, and the floor or ceiling above. It is not the intent to prohibit a smoke barrier from stopping at a fire barrier if the fire barrier meets the requirements of a smoke barrier (that is, the fire barrier is a combination smoke barrier/fire barrier).

A.8.12.1.2 Openings might include items such as stairways, hoistways for elevators, dumbwaiters, and inclined and vertical conveyors; and shaftways used for light, ventilation, or building services.

A.8.12.1.3(2) One method of determining the fire resistance rating of expansion and seismic joints is by testing in accordance with UL 2079, *Standard for Test for Fire Resistance of Building Joint Systems*.

A.8.12.1.5 The application of the 2-hour rule in buildings not divided into stories is permitted to be based on the number of levels of platforms or walkways served by the stairs.

A.8.12.2(7) Given that a mezzanine meeting the maximum one-third area criterion of Section 8.13 is not considered a story, it is therefore permitted to have 100 percent of its exit access within the communicating area run back through the story below.

A.8.12.3 Where atriums are used, there is an added degree of safety to occupants because of the large volume of space into which smoke can be dissipated. However, there is a need to ensure that dangerous concentrations of smoke are promptly removed from the atrium, and the exhaust system needs careful design. For information about systems that can be used to provide smoke protection in these spaces, see the following:

(1) NFPA 92B, *Standard for Smoke Management Systems in Malls, Atria, and Large Spaces*
(2) *Design of Smoke Management Systems* by J.H. Klote and J.A. Milke

A.8.12.3(1)(b) The intent of the requirement for closely spaced sprinklers is to wet the atrium glass wall to ensure that the surface of the glass is wet upon operation of the sprinklers, with a maximum spacing of sprinklers of 6 ft (1830 mm) on centers. Provided that it can be shown that the glass can be wet by the sprinklers using a given discharge rate and that the 6 ft (1830 mm) spacing is not exceeded, the intent of the requirement is met. It is important that the entire glass area surface is wet. Due consideration should be given to the height of the glass panels and any horizontal members that might interfere with sprinkler wetting action.

A.8.12.3(5) See NFPA 92B, *Standard for Smoke Management Systems in Malls, Atria, and Large Spaces*.

The engineering analysis should include the following elements:

(1) Fire dynamics, including fire size and location; materials likely to be burning; fire plume geometry; fire plume or smoke layer impact on means of egress; and tenability conditions during the period of occupant egress
(2) Response and performance of building systems, including passive barriers, automatic detection and extinguishing, and smoke control
(3) Response time required for building occupants to reach building exits, including any time required to exit through the atrium as permitted by 8.12.3(2)

A.8.12.3(6) Activation of the ventilation system by manual fire alarms, extinguishing systems, and detection systems can cause unwanted operation of the system, and it is recommended that consideration be given to zoning of the activation functions so the ventilation system operates only when actually needed.

A.8.12.4.2(4) This requirement prohibits means of egress down or up the convenience opening. It does not prohibit means of escape from running down or up the convenience opening within residential dwelling units.

A.8.12.5.2(2) The intent of the exception is to place a limitation on the size of the opening to which the protection applies. The total floor opening should not exceed twice the

Copyright National Fire Protection Association
Provided by IHS under license with NFPA
No reproduction or networking permitted without license from IHS
Not for Resale

projected area of the escalator or moving walk at the floor. Also, the arrangement of the opening is not intended to circumvent the requirements of 8.12.3.

As with any opening through a floor, the openings around the outer perimeter of the escalators should be considered as vertical openings. The sprinkler draftstop installation is intended to provide adequate protection for these openings, provided that the criteria of NFPA 13, *Standard for the Installation of Sprinkler Systems*, as well as the area criteria described in the preceding paragraph, are met.

A.8.15.1 Areas requiring special hazard protection include, but are not limited to, areas such as those used for storage of combustibles or flammables, areas housing heat-producing appliances, or areas used for maintenance purposes.

A.10.1 The requirements pertaining to interior finish are intended to restrict the spread of fire over the continuous surface forming the interior portions of a building.

The presence of multiple paint layers has the potential for paint delamination and bubbling or blistering of paint. Testing (*Fire Technology*, August 1974, "Fire Tests of Building Interior Covering Systems," by David Waksman and John Ferguson, Institute for Applied Technology, National Bureau of Standards) has shown that adding up to two layers of paint with a dry film thickness of about 0.007 in. (0.18 mm) will not change the fire properties of surface covering systems. Testing has shown that the fire properties of the surface covering systems are highly substrate dependent and that thin coatings generally take on the characteristics of the substrate. When exposed to fire, the delamination, bubbling, and blistering of paint can result in an accelerated rate of flame spread.

A.10.1.3 Such partitions are intended to include washroom water closet partitions.

A.10.2 Table A.10.2 provides a compilation of the interior finish requirements of 11.1.4 and the occupancy chapters (Chapters 16 through 30) of this *Code*.

A.10.2.2 This paragraph recognizes that traditional finish floors and floor coverings, such as wood flooring and resilient floor coverings, have not proved to present an unusual hazard.

A.10.3.1 ASTM E 84, *Standard Test Method of Surface Burning Characteristics of Building Materials,* is considered a nationally recognized consensus standard test method for determining the flame spread index and smoke development index of building materials and is likely to yield equivalent test results to those of NFPA 255, *Standard Method of Test of Surface Burning Characteristics of Building Materials. (See also A.10.3.2.)*

A.10.3.1.3 It is the intent of the *Code* to mandate interior wall and ceiling finish materials that have had their fire performance and smoke developed characteristics determined in their original form. However, in renovations, particularly those involving historic buildings, and in changes of occupancy, the required fire performance or smoke developed characteristics of existing surfaces of walls, partitions, columns, and ceilings might have to be secured by applying approved fire-retardant coatings to surfaces having higher flame spread ratings than permitted. Such treatments should comply with the requirements of NFPA 703, *Standard for Fire Retardant Impregnated Wood and Fire Retardant Coatings for Building Materials*. Where fire-retardant coatings are used, they need to be applied to properly prepared surfaces, and the application needs to be consistent with the product listing. Deterioration of coatings applied to interior finishes can occur due to repeated cleaning of the surface or painting over applied coatings, but permanency must be ensured in some appropriate fashion. Fire-retardant coatings must possess the desired degree of permanency and be maintained so as to retain the effectiveness of the treatment under the service conditions encountered in actual use.

A.10.3.2 It has been shown that the method of mounting interior finish materials can affect actual performance. Where materials are tested in intimate contact with a substrate to determine a classification, such materials should be installed in intimate contact with a similar substrate. Such details are especially important for thermally thin materials. For further information, see NFPA 255, *Standard Method of Test of Surface Burning Characteristics of Building Materials*.

Some interior wall and ceiling finish materials, such as fabrics not applied to a solid backing, do not lend themselves to a test made in accordance with NFPA 255. In such cases, if the material is not treated as interior finish, the appropriate test outlined in NFPA 701, *Standard Methods of Fire Tests for Flame Propagation of Textiles and Films*, should be considered.

Prior to 1978, the test report described by NFPA 255 included an evaluation of the fuel contribution as well as the flame spread rating and the smoke development value. However, it is now recognized that the measurement on which the fuel contribution is based does not provide a valid measure. Therefore, although the data are recorded during the test, the information is no longer normally reported. Classification of interior wall and ceiling finish thus relies only on flame spread index and smoke development value.

The smoke development value limit of 450 is based solely on obscuration.

A.10.3.6 The methodology specified in NFPA 265, *Standard Methods of Fire Tests for Evaluating Room Fire Growth Contribution of Textile Coverings on Full Height Panels and Walls*, includes provisions for measuring smoke obscuration. Such measurement is considered desirable, but the basis for specific recommended values is not currently available. *[See A.10.4.1(4)(4).]*

A.10.3.6.1 See A.10.3.6 and A.10.4.1(4).

A.10.4 Surface nonmetallic raceways are not interior finish and are not subject to the provisions of Chapter 10.

A.10.4.1(4) Historically, codes have regulated textile materials on walls and ceilings using NFPA 255, *Standard Method of Test of Surface Burning Characteristics of Building Materials*. Full-scale room-corner fire test research has shown that flame spread indices produced by NFPA 255 might not reliably predict all aspects of the fire behavior of textile wall and ceiling coverings.

NFPA 265, *Standard Methods of Fire Tests for Evaluating Room Fire Growth Contribution of Textile Coverings on Full Height Panels and Walls*, and NFPA 286, *Standard Methods of Fire Tests for Evaluating Contribution of Wall and Ceiling Interior Finish to Room Fire Growth*, both known as room-corner tests, were developed for assessing the fire and smoke obscuration performance of textile wall coverings and interior wall and ceiling finish materials, respectively. As long as an interior wall or ceiling finish material is tested by NFPA 265 or by NFPA 286, as appropriate, using a mounting system, substrate, and adhesive (if appropriate) that are representative of actual use, the room-corner test provides an adequate evaluation of a product's flammability and smoke obscuration behavior. Manufacturers, installers, and specifiers should be encouraged to use NFPA 265 or NFPA 286, as appropriate — but not both — because each of

Copyright National Fire Protection Association
Provided by IHS under license with NFPA
No reproduction or networking permitted without license from IHS
Not for Resale

Table A.10.2 Interior Finish Classification Limitations

Occupancy	Exits*	Access to Exits	Other Spaces
Assembly			
>300 occupant load	A	A or B	A or B
≤300 occupant load	A	A or B	A, B, or C
Educational	A	A or B; C on low partitions†	A or B; C on low partitions†
Day-care centers	A	A I or II	A or B
Group day-care homes	A or B	A or B	A, B, or C
Family day-care homes	A or B	A, B, or C	A, B, or C
Health care (sprinklers mandatory)	A or B	A or B; C on lower portion of corridor wall†	A or B; C in small individual rooms†
Ambulatory health care	A or B	A or B I or II	A, B, or C
Detention and correctional (sprinklers mandatory)	A or B I	A or B I	A, B, or C
Hotels and dormitories	A	A or B I or II	A, B, or C
Apartment buildings	A	A or B I or II†	A, B, or C
One- and two-family and lodging or rooming houses	A, B, or C	A, B, or C	A, B, or C
Residential board and care *(See Chapter 26.)*			
Mercantile	A or B	A or B	A or B
Business	A or B	A or B	A, B, or C
Industrial	A or B	A, B, or C	A, B, or C
Storage	A or B	A, B, or C	A, B, or C

Notes:
(1) Class A interior wall and ceiling finish — flame spread 0–25, (new) smoke developed 0–450.
(2) Class B interior wall and ceiling finish — flame spread 26–75, (new) smoke developed 0–450.
(3) Class C interior wall and ceiling finish — flame spread 76–200, (new) smoke developed 0–450.
(4) Class I interior floor finish — critical radiant flux, not less than 0.45 W/cm^2.
(5) Class II interior floor finish — critical radiant flux, not less than 0.22 W/cm^2 but less than 0.45 W/cm^2.
(6) Where a complete standard system of automatic sprinklers is installed, interior wall and ceiling finish with a rating not exceeding Class C is permitted to be used in any location where Class B is required, and interior wall and ceiling finish with a rating of Class B is permitted to be used in any location where Class A is required; similarly, Class II interior floor finish is permitted to be used in any location where Class I is required, and no critical radiant flux rating is required where Class II is required. These provisions do not apply to new health care facilities.
(7) Exposed portions of structural members complying with the requirements for heavy timber construction are permitted.
*Paragraph 11.1.4.2 requires Class I or Class II interior floor finish in exits.
† See corresponding chapters for details.

these standard fire tests has the ability to characterize actual product behavior, as opposed to data generated by tests using NFPA 255, which only allow comparisons of one product's performance with another. If a manufacturer or installer chooses to test a wall finish in accordance with NFPA 286, additional testing in accordance with NFPA 255 is not necessary.

The test results from NFPA 255 are suitable for classification purposes but should not be used as input for fire models, because they are not generated in units suitable for engineering calculations. Actual test results for heat, smoke, and combustion product release from NFPA 265 and NFPA 286 are suitable for use as input for fire models for performance-based design.

A.10.4.2 Expanded vinyl wall covering consists of a woven textile backing, an expanded vinyl base coat layer, and a non-expanded vinyl skin coat. The expanded base coat layer is a homogeneous vinyl layer that contains a blowing agent. During processing, the blowing agent decomposes, which causes this layer to expand by forming closed cells. The total thickness of the wall covering is approximately 0.055 in. to 0.070 in. (1.4 mm to 1.8 mm).

A.10.4.3.1 One of the following large-scale test methods shall be used. Suitable large-scale fire tests are NFPA 286, *Standard Methods of Fire Tests for Evaluating Contribution of Wall and Ceiling Interior Finish to Room Fire Growth*, using the acceptance criteria of 10.3.6.2 of this *Code*, UL 1715, *Standard for Safety for Fire Test of Interior Finish Material*, UL 1040, *Standard for Fire Test of Insulated Wall Construction*, and FM 4880, *Approval Standard for Class 1 Insulated Wall or Wall and Roof/Ceiling Panels; Plastic Interior Finish Materials; Plastic Exterior Building Panels; Wall/Ceiling Coating Systems; Interior or Exterior Finish Systems*. Both NFPA 286 and UL 1715 contain smoke obscuration criteria. UL 1040 and FM 4880 do not. Smoke obscuration is an important component of the fire performance of cellular or foamed plastic materials.

Copyright National Fire Protection Association
Provided by IHS under license with NFPA
No reproduction or networking permitted without license from IHS
Not for Resale

A.10.4.4 Light-transmitting plastics are used for a variety of purposes, including light diffusers, exterior wall panels, skylights, canopies, glazing, and the like. Historically, building-related documents have not addressed the use of light-transmitting plastics. Light-transmitting plastics will not normally be used in applications representative of interior finishes. Accordingly, NFPA 255, *Standard Method of Test of Surface Burning Characteristics of Building Materials*, can produce test results that might or might not apply.

A.10.6 The flooring radiant panel provides a measure of a floor covering's tendency to spread flames where located in a corridor and exposed to the flame and hot gases from a room fire. The flooring radiant panel test method is to be used as a basis for estimating the fire performance of a floor covering installed in the building corridor. Floor coverings in open building spaces and in rooms within buildings merit no further regulation, provided that it can be shown that the floor covering is at least as resistant to spread of flame as a material that meets the U.S. federal flammability standard 16 CFR 1630, *Standard for the Surface Flammability of Carpets and Rugs* (FF 1-70). All carpeting sold in the U.S. since 1971 is required to meet this standard and, therefore, is not likely to become involved in a fire until a room reaches or approaches flashover. Therefore, no further regulations are necessary for carpet, other than carpet in exitways and corridors.

It has not been found necessary or practical to regulate interior floor finishes on the basis of smoke development.

Full-scale fire tests and fire experience have shown that floor coverings in open building spaces merit no regulation beyond the United States federally mandated DOC FF 1-70 "pill test." This is because floor coverings meeting the pill test will not spread flame significantly until a room fire approaches flashover. At flashover, the spread of flame across a floor covering will have minimal impact on the already existing hazard. The minimum critical radiant flux of a floor covering that will pass the FF 1-70 test has been determined to be approximately 0.04 W/cm^2 (Tu, King-Mon and Davis, Sanford, *Flame Spread of Carpet Systems Involved in Room Fires*, NFSIR 76-1013, Center for Fire Research, National Bureau of Standards, June 1976). The flooring radiant panel is only able to determine critical radiant flux values to 0.1 W/cm^2. This provision will prevent use of a noncomplying material, which can create a problem, especially when the *Code* is used outside the U.S. where U.S. Federal regulation FF 1-70 (16 CFR 1630) is not mandated.

A.10.6.2 See A.10.2.2.

A.10.6.3 ASTM E 648, *Standard Test Method for Critical Radiant Flux of Floor Covering Systems Using a Radiant Heat Energy Source,* is considered a nationally recognized consensus standard test method for determining the critical radiant flux from floor covering systems and is likely to yield equivalent test results to those of NFPA 253, *Standard Method of Test for Critical Radiant Flux of Floor Covering Systems Using a Radiant Heat Energy Source.*

A.11.1.1 Portable ladders, rope fire escapes, and similar emergency escape devices can have a useful function in facilitating escape from burning buildings lacking adequate exits of the stair or other standard type, but they are not the equivalent of standard exits, and their use is not in any way recognized by this *Code* as satisfying the requirements for means of egress. Furthermore, many such devices are of types unsuitable for use by aged or infirm persons or by small children. Therefore, such devices can provide a false sense of security and should not be used as an excuse for not providing standard exit facilities.

A.11.1.3.2.1.5 Means of egress from the level of exit discharge is permitted to pass through an exit stair enclosure or exit passageway serving other floors. Doors for convenience purposes and unrelated to egress also are permitted to provide access to and from exit stair enclosures and exit passageways, provided that such doors are from corridors or normally occupied spaces. It is also the intent of this provision to prohibit exit enclosure windows, other than approved vision panels in doors, that are not mounted in an exterior wall.

A.11.1.3.2.1.6(2) Penetrations for electrical wiring are permitted where the wiring serves equipment permitted by the authority having jurisdiction to be located within the exit enclosure, such as security systems, public address systems, and fire department emergency communications devices.

A.11.1.3.2.3 This provision prohibits the use of exit enclosures for storage or for installation of equipment not necessary for safety. Occupancy is prohibited, other than for egress, refuge, and access. The intent is that the exit enclosure essentially be "sterile" with respect to fire safety hazards.

A.11.1.4.1 See Chapters 16 through 30 for further limitations.

A.11.1.4.2 See Chapters 16 through 30 for further limitations.

A.11.1.5 For the purpose of this requirement, projections include devices such as lighting equipment, emergency signaling equipment, environmental controls and equipment, security devices, signs, and decorations that are typically limited in area.

A.11.1.6.4 The foreseeable conditions are the conditions that are likely to be present at the location of the walking surface during the use of the building or area. A foreseeable condition of a swimming pool deck is that it is likely to be wet.

Regarding the slip resistance of treads, it should be recognized that, when walking up or down stairs, a person's foot exerts a smaller horizontal force against treads than is exerted when walking on level floors. Therefore, materials used for floors that are acceptable as slip resistant (as described by ASTM F 1679, *Standard Test Method for the Variable Incidence Tribometer*, or ASTM 1677, *Standard Test Method for Using a Portable Inclineable Articulate Strut Tester*) provide adequate slip resistance where used for stair treads. Adequate slip resistance includes the important leading edge of a tread, that is, the part of the tread that the foot first contacts during descent, which is the most critical direction of travel. If stair treads are wet, there is an increased danger of slipping, just as there is an increased danger of slipping on wet floors of similar materials. A small wash or drainage slope on exterior stair treads is, therefore, recommended to shed water. *(See Templer, J. A., The Staircase: Studies of Hazards, Falls, and Safer Design, Cambridge, MA: MIT Press, 1992.)*

A.11.1.7.2 Aside from the problems created for persons who are mobility impaired, small changes of elevations in floors are best avoided because of the increased occurrence of missteps where the presence of single steps, a series of steps, or a ramp is not readily apparent. While small changes of elevation pose significant fall risks in the case of individual movement, they are even more undesirable where crowds traverse the area.

A contrasting marking stripe on each stepping surface can be helpful at the nosing or leading edge so that the location of each step is readily apparent, especially when viewed in descent. Such stripes should be not less than 1 in. (25 mm), but

Copyright National Fire Protection Association
Provided by IHS under license with NFPA
No reproduction or networking permitted without license from IHS
Not for Resale

should not exceed 2 in. (51 mm), in width. Other methods could include a relatively higher level of lighting, contrasting colors, contrasting textures, highly prominent handrails, warning signs, a combination thereof, or other similar means. The construction or application of marking stripes should be such that slip resistance is consistent over the walking surface and no tripping hazard is created *(see also A.11.2.2.3.3.2)*. Depending on the distractions of the surroundings, the familiarity of users with a particular small change of level, and especially the number of people that might be in a group traversing the change of level (thereby reducing visibility of the level changes), a strong argument can be made for the elimination of steps and ramps that might pose a risk of missteps.

A.11.1.10.1 A proper means of egress allows unobstructed travel at all times. Any type of barrier including, but not limited to, the accumulations of snow and ice in those climates subject to such accumulations is an impediment to free movement in the means of egress.

A.11.2.1.1.3 Although 11.2.1.1.3 and 11.2.1.5.1 permit locking of means of egress doors where a building is not considered occupied, the *Code* does not intend to permit occupants to be locked beyond their control in buildings or building spaces, except for detention and correctional occupancies and health care occupancies.

A.11.2.1.1.4 NFPA 105, *Standard for the Installation of Smoke Door Assemblies*, can be used to determine an unacceptable level of air leakage for the doors.

A.11.2.1.2.1 Figure A.11.2.1.2.1(a) and Figure A.11.2.1.2.1(b) illustrate the method of measuring door width for purposes of calculating egress capacity.

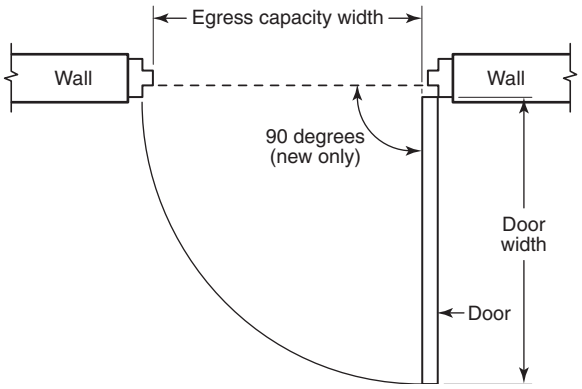

FIGURE A.11.2.1.2.1(a) Door Width — Egress Capacity.

A.11.2.1.2.3 Figure A.11.2.1.2.3(a) and Figure A.11.2.1.2.3(b) illustrate the method of measuring clear width for doors.

In cases where a chapter requires a door width, for example, of not less than 36 in. (915 mm), this requirement can be met by a door leaf of the minimum specified width, provided that the term *clear width* does not appear as part of the minimum width requirement. A pair of cross-corridor doors subject to such a requirement would be judged under the following criteria:

(1) Each door leaf is required to be not less than 36 in. (915 mm) in width.

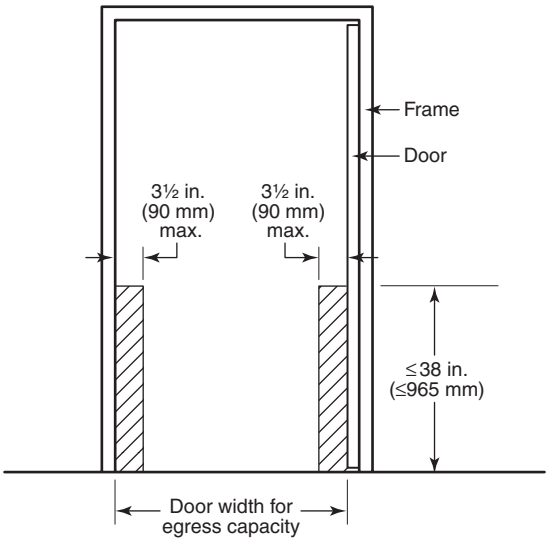

FIGURE A.11.2.1.2.1(b) Door Width — Egress Capacity with Permitted Obstructions.

(2) The pair of doors is required to provide sufficient, clear, unobstructed width (which will be less than the door leaf width measurement) to handle its assigned occupant load, based on a calculation using the appropriate egress capacity factor in Table 11.3.3.1.

Where swinging doors do not open at least 90 degrees, the clear width of the doorway should be measured between the face of the door and the stop.

It is not the intent to regulate projections above the 6 ft 8 in. (2030 mm) height specified in 11.2.1.2.3.3.

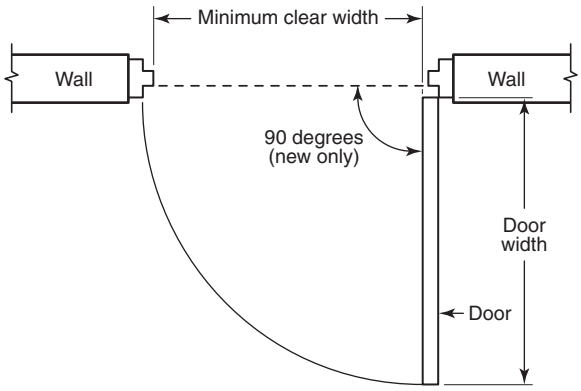

FIGURE A.11.2.1.2.3(a) Minimum Clear Width.

A.11.2.1.2.4(8) The relative egress carrying capacity of door openings and stairs is based on the two-to-three ratio used in Table 11.3.3.1 to help balance the capacity of various egress elements and assure that downstream egress facilities do not form a bottleneck or constriction to flow. For example, a stairway with a nominal width of 56 in. (1420 mm) should be served by an exit discharge door with a minimum width opening of 37 in. (940 mm) if only one discharge door is provided. It might be advantageous for two discharge doors to serve such a stairway, each with a more-typical clear opening width of

--`,,```,,,,````-`-`,,`,,`,`,,`---

Copyright National Fire Protection Association
Provided by IHS under license with NFPA
No reproduction or networking permitted without license from IHS
Not for Resale

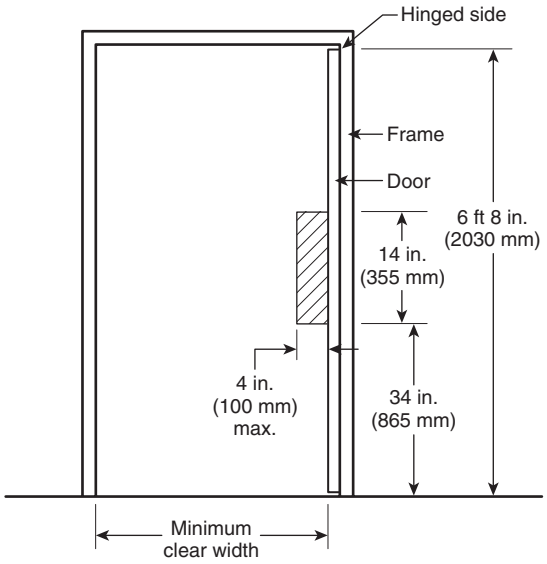

FIGURE A.11.2.1.2.3(b) Minimum Clear Width with Permitted Obstructions.

32 in. (810 mm). This would facilitate access, into the exit, of firefighters and other emergency responders without causing undue interference to evacuees attempting to transition from the stair to the exit discharge door.

A.11.2.1.4.1 Where doors are subject to two-way traffic, or where their opening can interfere with pedestrian traffic, an appropriately located vision panel can reduce the chance of accidents.

Swinging doors in horizontal- or vertical-rolling partitions should be permitted in a means of egress where the following criteria are met:

(1) The door or doors comply with 11.2.1.4.
(2) The partition in which the doors are mounted complies with the applicable fire protection rating and closes upon smoke detection or power failure at a speed not exceeding 9 in./s (230 mm/s) and not less than 6 in./s (150 mm/s).
(3) The doors mounted in the partition are self-closing or automatic closing in accordance with 11.2.1.8.

A.11.2.1.4.3 The requirement of 11.2.1.4.3 is not intended to apply to the swing of cross-corridor doors such as smoke barrier doors and horizontal exits.

A.11.2.1.5.4 Examples of devices that might be arranged to release latches include knobs, levers, and bars. This requirement is permitted to be satisfied by the use of conventional types of hardware, whereby the door is released by turning a lever, knob, or handle or by pushing against a bar, but not by unfamiliar methods of operation, such as a blow to break glass. It is also within the intent of this requirement that switches integral to traditional door knobs, lever handles, or bars, that interrupt the power supply to an electromagnetic lock, be permitted, provided that they are affixed to the door leaf. The operating devices should be capable of being operated with one hand and should not require tight grasping, tight pinching, or twisting of the wrist to operate.

Examples of the devices permitted by 11.2.1.5.4 that, where used with a latch, can be arranged to require not more than one additional releasing operation include night latches, dead bolts, and security chains.

A.11.2.1.5.8 It is intended that the re-entry provisions apply only to enclosed exit stairs, not to outside stairs. This arrangement makes it possible to leave the stairway at such floor if the fire renders the lower part of the stair unusable during egress or if the occupants seek refuge on another floor.

A.11.2.1.5.12 Examples of devices prohibited by this requirement include locks, padlocks, hasps, bars, chains, or combinations thereof.

A.11.2.1.6.1.6 In the event that the authority having jurisdiction has permitted increased operation time, the sign should reflect the appropriate time.

A.11.2.1.6.2 It is not the intent to require doors that restrict access but comply with 11.2.1.5.9 to comply with the access-controlled egress door provisions of 11.2.1.6.2.

A.11.2.1.8.1 Examples of doors designed to normally be kept closed include those to a stair enclosure or horizontal exit.

A.11.2.1.9 Powered doors are divided into two categories — power assisted and power operated. Power-assisted doors that conform to ANSI/BHMA A156.19, *American National Standard for Power Assist & Low Energy Power Operated Doors*, use limited power to operate the door. They require fewer safeguards compared to full power–operated doors. These door operators are for swinging doors only. Power-operated doors that conform to ANSI/BHMA A156.10, *American National Standard for Power Operated Pedestrian Doors*, require more power to operate the door and require additional safeguards to provide protection against personal injury. Power-operated doors can be swinging, sliding, or folding doors.

A.11.2.1.9.1 An example of the type of door addressed by 11.2.1.9.1 is a door actuated by a motion-sensing device upon the approach of a person.

Although a single power-operated door leaf located within a two-leaf opening might alone not provide more than 30 in. (760 mm) of clear width in the emergency breakout mode, where both leaves are broken out to become side-hinged, the required egress width is permitted to be provided by the width of the entire opening.

A.11.2.2.2.1.1 If a stairway, other than an aisle stair, has intermediate handrails, at least one of the resulting clear widths of the stairway will need to comply with the stipulated minimum widths. Other portions could be as narrow as 20 in. (510 mm), clear between handrails, as permitted by 11.2.2.4.1.3.

A.11.2.2.2.1.1(B) The stair width requirement of 11.2.2.2.1.1(B) is based on accumulating the occupant load on each story the stair serves.

The accumulating of occupant load is done for the purposes of the requirement of 11.2.2.2.1.1 only. The egress capacity requirements of Section 11.3 are NOT cumulative on a story-by-story basis.

If additional exits provide egress capacity, the occupant load served by such additional exits, up to the limit permitted for the egress capacity of such additional exits, is not added to the total occupant load considered for the minimum stair width requirements of 11.2.2.2.1.1.

If horizontal exits are provided on any of the stories, the total occupant load of all compartments on the story with the horizontal exits is used in the calculation of the minimum stair width requirements of 11.2.2.2.1.1. The number

--`,,```,,,,````-`-`,,`,,`,`,,`---
Copyright National Fire Protection Association
Provided by IHS under license with NFPA
No reproduction or networking permitted without license from IHS
Not for Resale

of stairs permitted through application of horizontal exit requirements, in 11.2.4, is not affected by the minimum stair width requirements of 11.2.2.2.1.1.

The following examples illustrate applications of the minimum stair width requirement:

(1) A stair in a 2-story building that has 2000 persons on the second story, among 10 equally sized stairs that serve the second story, would be considered to have an occupant load of 200 for the purposes of applying Table 11.2.2.2.1.1(B). The minimum width of such a stair would be 44 in. (1120 mm).
(2) For a relatively large floor area building, a typical 44 in. (1120 mm) stair would not be required to be increased in width until it serves approximately 14 stories, calculated as follows:

$$\frac{\text{2000 persons}}{\text{147 persons per floor for a 44 in. (1120 mm) width stair}} \approx 14 \text{ stories}$$

For egress in the descending direction, only the stair width below the 14 stories with the total occupant load of 2000 persons per stair, or 4000 persons if served by two equally sized stairs, would need to be increased to 56 in. (1420 mm). If the building had 20 stories, only the stairs on the lowest 7 stories would be required to have the 56 in. (1420 mm) width.
(3) For a 41-story building with 200 persons on each story (or 8000 persons overall, not including the ground floor), with two equally sized stairs, each stair would be considered to have 4000 persons for the purposes of applying Table 11.2.2.2.1.1(B). Only the portion of the stair serving 2000 persons would be required to have the wider width. If each story provides the same floor area for occupancy, the upper 20 stories would have 44 in. (1120 mm) stairs, and the lowest 20 stories would have the 56 in. (1420 mm) stairs as a minimum.

A.11.2.2.2.4 If properly designed and constructed, stairs with winders are not necessarily more dangerous than other stairs. Attention to the following factors helps to make winders generally more effective for egress and safety:

(1) Handrails should be continuous, without breaks at newel posts, from story to story.
(2) Handrails located at a greater than normal distance from the inner turn of winders can improve safety by constraining stair users to walk on the portion of the treads providing deeper treads, which should have not less than 11 in. (280 mm) of depth.
(3) Combinations of straight flights and winders are best arranged with winders located only below the straight flight, because the winders provide larger tread dimensions over much of their width than do typical treads on straight flights; thus, a descending person is unlikely to experience a reduction of tread depth during descent, a condition of nonuniformity that should be avoided.

A.11.2.2.3.3.2 The tripping hazard referred to in 11.2.2.3.3.2 occurs especially during descent, where the tread walking surface has projections such as strips of high-friction materials or lips from metal pan stairs that are not completely filled with concrete or other material. Tread nosings that project over adjacent treads can also be a tripping hazard. ICC/ANSI A117.1, *American National Standard for Accessible and Usable Buildings and Facilities*, illustrates projecting nosing configurations that minimize the hazard.

Where environmental conditions (such as illumination levels and directionality, or a complex visual field that draws a person's attention away from stair treads) lead to a hazardous reduction in the ability to perceive stair treads, treads should be made of a material that allows ready discrimination of the number and position of treads. In all cases, the leading edges of all treads should be readily visible during both ascent and descent. A major factor in injury-producing stair accidents and in the ability to use stairs efficiently in conditions such as egress is the clarity of the stair treads as separate stepping surfaces.

A.11.2.2.3.4 A small drainage slope for stair treads subject to wetting can improve tread slip resistance *(see also A.11.2.2.3.3.2)*. A consistent slope to a side of the stair, where drainage is possible, might be preferable to a front-to-back slope of the treads. Providing a pitch of ⅛ in./ft to ¼ in./ft (10 mm/m to 20 mm/m) aids the shedding of water from a nominally horizontal surface.

A.11.2.2.3.5 Figure A.11.2.2.3.5(a), Figure A.11.2.2.3.5(b), Figure A.11.2.2.3.5(c), and Figure A.11.2.2.3.5(d) illustrate the method for measuring riser height and tread depth. Stairs that are covered with resilient floor coverings might need additional tread depth beyond the minimum specified in the *Code*. Any horizontal projection of resilient covering materials beyond the tread nosing and riser, such as carpet and underlayment, can interfere with users' feet and, thereby, reduce usable tread depth. At the tread nosing, such resilient covering materials might not be capable of providing stable support for users' feet. Generally, effective tread depth is reduced by the uncompressed thickness of such resilient coverings and might be further reduced over time if coverings are not well secured and, consequently, move forward at the nosings. *[See Figure A.11.2.2.3.5(e)].*

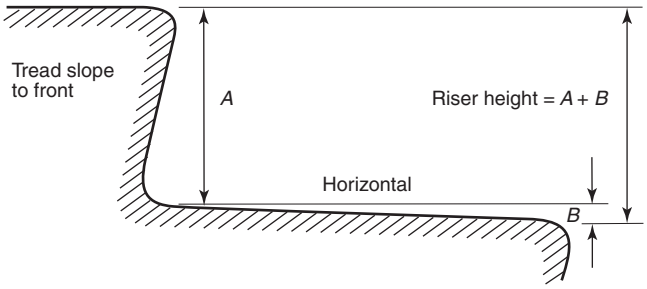

FIGURE A.11.2.2.3.5(a) Riser Measurement with Tread Slope to Front.

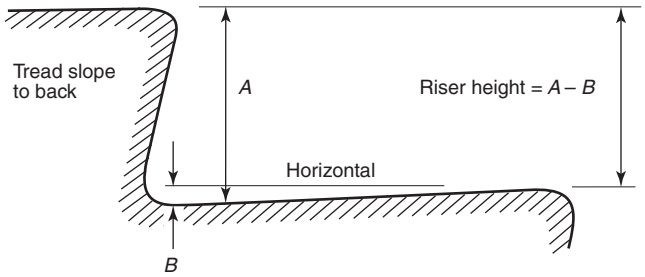

FIGURE A.11.2.2.3.5(b) Riser Measurement with Tread Slope to Back.

Copyright National Fire Protection Association
Provided by IHS under license with NFPA
No reproduction or networking permitted without license from IHS
Not for Resale

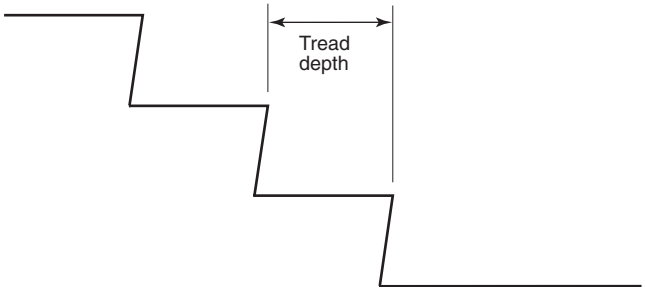

FIGURE A.11.2.2.3.5(c) Tread Depth.

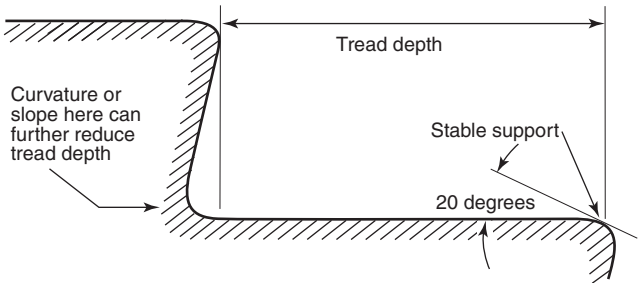

FIGURE A.11.2.2.3.5(d) Tread Measurement with Stable Support at Leading Edge.

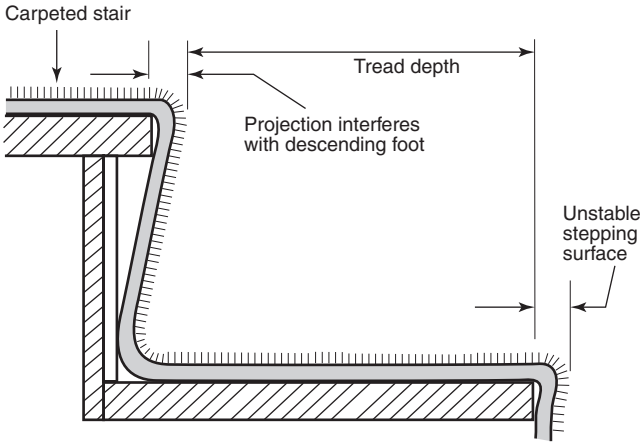

FIGURE A.11.2.2.3.5(e) Tread Measurement with Unstable Stepping Surface at Leading Edge.

A.11.2.2.4 Means of egress components that might require protection with guards include stairs, landings, balconies, corridors, passageways, floor or roof openings, ramps, aisles, porches, and mezzanines.

A.11.2.2.4.2 The intent of this provision is to place handrails for the required egress width only, regardless of the actual width. The required egress width is provided along the natural path of travel to and from the building. Examples of this requirement are shown in Figure A.11.2.2.4.2. The reduced intermediate handrail spacing of 60 in. (1525 mm) along with a handrail height within the permissible height limits allows users to reach and grasp one handrail. Except as noted in 11.2.2.4.2 and 11.2.2.4.5, handrails are not required on stair landings.

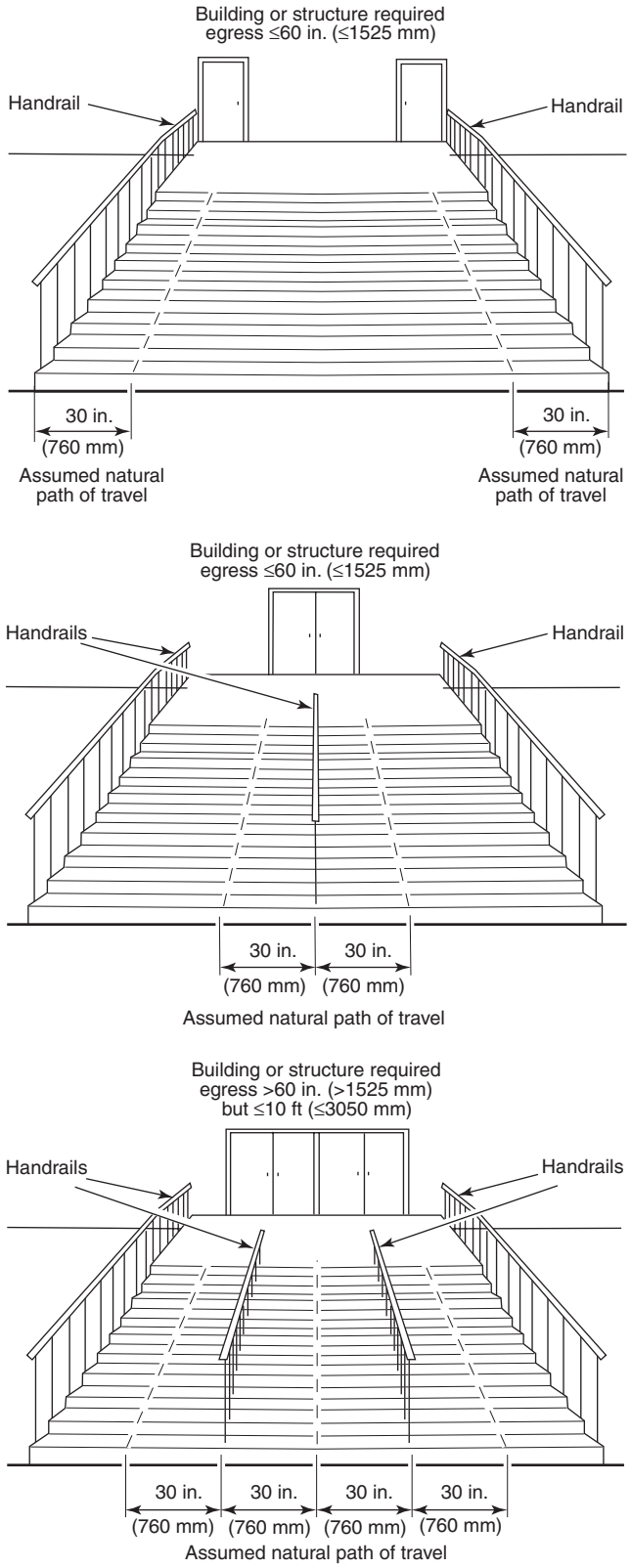

FIGURE A.11.2.2.4.2 Assumed Natural Paths of Travel on Monumental Stairs with Various Handrail Locations.

Copyright National Fire Protection Association
Provided by IHS under license with NFPA
No reproduction or networking permitted without license from IHS
Not for Resale

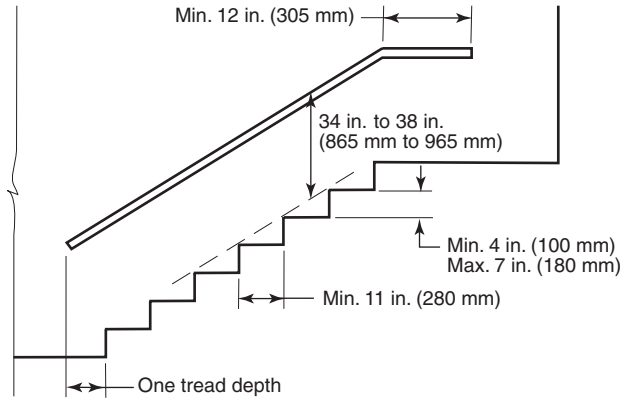

ELEVATION VIEW (straight stair)

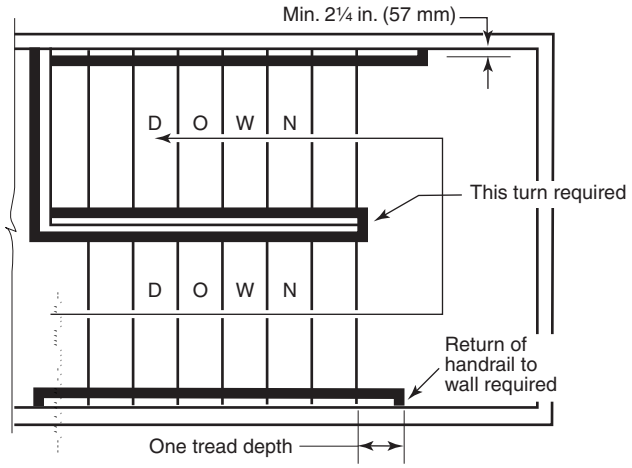

PLAN VIEW (return stair)

FIGURE A.11.2.2.4.5 Handrail Details.

A.11.2.2.4.5 Figure A.11.2.2.4.5 illustrates some of the requirements of 11.2.2.4.5.

A.11.2.2.4.5.1 Additional handrails, beyond those required by the *Code*, are permitted by 11.2.2.4.5.3 at heights other than those stipulated. For example, where children under the age of 5 are major users of a facility, an additional handrail at a height in the range of 28 in. to 32 in. (710 mm to 810 mm) might be useful. Generally, children prefer to use, and can effectively use, handrails that are located at shoulder-to-head height, due to their developmental characteristics and their less developed balance and walking abilities. At age 3, head height ranges from 35 in. to 40 in. (890 mm to 1015 mm), and shoulder height averages 29 in. (735 mm). At age 5, head height ranges from 39 in. to 46 in. (990 mm to 1170 mm), and shoulder height ranges from 31 in. to 37 in. (790 mm to 940 mm).

A.11.2.2.4.5.5 Handrails should be designed so they can be grasped firmly with a comfortable grip and so the hand can be slid along the rail without encountering obstructions. The profile of the rail should comfortably match the hand grips. For example, a round profile, such as is provided by the simplest round tubing or pipe having an outside diameter of 1½ in. to 2 in. (38 mm to 51 mm), provides good graspability for adults. Factors such as the use of a handrail by small children and the wall-fixing details should be taken into account in assessing handrail graspability. The most functional as well as the most preferred handrail shape and size is circular with a 1½ in. (38 mm) outside diameter (according to research conducted using adults). Handrails used predominantly by children should be designed at the lower end of the permitted dimensional range.

Handrails are one of the most important components of a stair; therefore, design excesses, such as oversized wood handrail sections, should be avoided, unless there is a readily perceived and easily grasped handhold provided. In handrail design, it is always useful to remember the effectiveness of a simple round profile that allows some locking action by fingers as they curl around the handrail.

Perimeter dimension, referred to in 11.2.2.4.5.5(2), is the length of the shortest loop that wraps completely around the railing.

A.11.2.2.4.6.3 Vertical intermediate rails are preferred to reduce climbability.

A.11.2.2.5.2 The purpose of this provision is to protect the exterior wall of a stairway from fires in other portions of the building. If the exterior wall of the stair is flush with the building exterior wall, the fire would need to travel around 180 degrees in order to impact the stair. This problem has not been an issue in existing buildings, so no protection is required. However, if the angle of exposure is less than 180 degrees, protection of either the stair wall or building wall is required.

Figure A.11.2.2.5.2(a), Figure A.11.2.2.5.2(b), and Figure A.11.2.2.5.2(c) illustrate the requirement, assuming nonrated glass on the exterior wall of the stair is used.

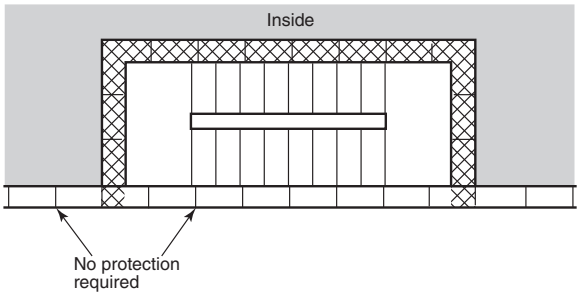

FIGURE A.11.2.2.5.2(a) Stairway with Nonrated Exterior Wall in Same Plane as Building Exterior Wall.

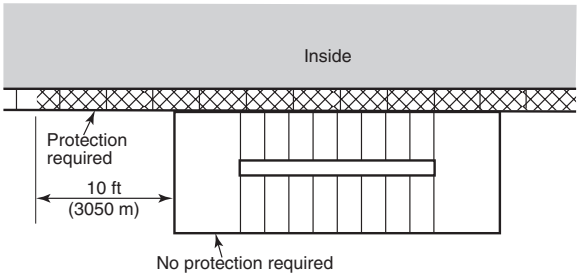

FIGURE A.11.2.2.5.2(b) Stairway with Unprotected Exterior Perimeter Protruding Past Building Exterior Wall.

Copyright National Fire Protection Association
Provided by IHS under license with NFPA
No reproduction or networking permitted without license from IHS
Not for Resale

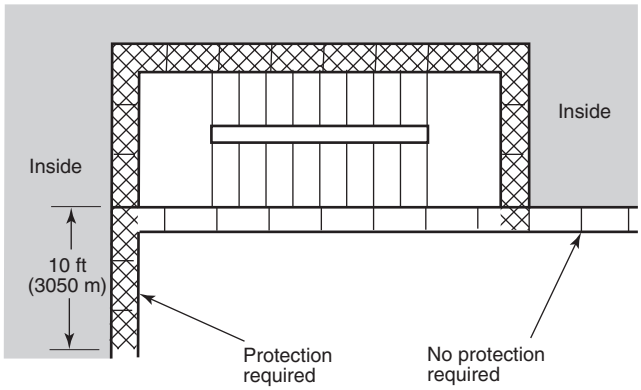

FIGURE A.11.2.2.5.2(c) Stairway with Nonrated Exterior Wall Exposed by Adjacent Exterior Wall of Building.

A.11.2.2.5.3.1 An example of a use with the potential to interfere with egress is storage.

A.11.2.2.6 The intent of this provision is to provide vital egress information to the occupants of a building and to fire fighters. To reduce information overload to occupants during emergency egress, a sign indicating the floor level of, and the direction to, the exit discharge is permitted to be placed as a separate sign, with another sign indicating the floor level, the terminus of the top and bottom of the stair enclosure, and the identification of the stair.

Figure A.11.2.2.6 shows an example of a stairway marking sign.



FIGURE A.11.2.2.6 Example of a Stairway Marking Sign.

A.11.2.2.6.8 For stair nosing marking, surface-applied material, such as adhesive-backed tape and magnetic strips, should not be used, as it is not durable under the scuffing from users' feet and, in coming loose, it creates a tripping hazard. While a carefully applied and consistently maintained coating is acceptable, contrasting color or photoluminescent material integral with the nosings is preferable because of its permanence. See also 11.1.6.4 and 11.2.2.3.3 for slip resistance uniformity requirements, as well as prohibition of projections on the treads.

Guidance on the use of photoluminescent marking is provided by ASTM E 2030, *Guide for Recommended Uses of Photoluminescent (Phosphorescent) Safety Markings*. Additional marking, for example, at the side boundaries of the stair, should be applied in accordance with the guidance provided therein. If photoluminescent marking is also provided for handrails, it should be on at least the upper surface of the handrail and should extend the full length of each handrail.

A.11.2.2.7.2 The guards that are required by 11.2.2.4 will usually meet this requirement where the stair is not more than three stories high. Special architectural treatment, including application of such devices as metal or masonry screens and grilles, will usually be necessary to comply with the intent of this requirement for stairs over three stories in height.

A.11.2.2.7.5 See A.11.2.2.3.4.

A.11.2.3.9.1 The design pressure differences required by 11.2.3.9.1 are based on specific gas temperatures and ceiling heights. The system is required to be approved, because anticipated conditions might be different from those on which the design pressure differences were calculated and, thus, different design pressure differences might be needed. For additional information on necessary minimum design pressure differences, including calculation techniques, or maximum pressure differences across doors to ensure reasonable operating forces, see NFPA 92A, *Recommended Practice for Smoke-Control Systems*.

A.11.2.4.1.2 *Example.* One way to provide the required egress capacity from the upper floor of a department store building with dimensions of 350 ft × 200 ft (107 m × 60 m), and an occupant load of 1166 per floor, would be to furnish eight 44 in. (1120 mm) stairs. *[See Figure A.11.2.4.1.2(a).]*

Assume that this building is divided into two sections by a fire barrier meeting the requirements for a horizontal exit, one 130 ft × 200 ft (40 m × 60 m), and the other 220 ft × 200 ft (67 m × 60 m), with two pairs of 46 in. (1170 mm) double egress doors, with each door providing 44 in. (1120 mm) of clear egress width *[see Figure A.11.2.4.1.2(b)]*. The smaller section, considered separately, will require the equivalent of three 44 in. (1120 mm) exit stairs, and the larger section will require five such exit stairs. The horizontal exits will serve as one of the three exits required for the smaller section and two of the five exits required for the larger section. Therefore, only two 44 in. (1120 mm) exit stairs from the smaller section and three 44 in. (1120 mm) exit stairs from the larger section will be required, if the exits can be arranged to meet the requirements for the 150 ft (45 m) travel distance permitted from any point in a nonsprinklered building. Thus, the total number of exit stairs required for the building will be five, as compared with eight if no horizontal exit had been provided.

Another option would be the use of two 56 in. (1420 mm) exit stairs from the larger section, which would reduce the total number of stairways required from the floor to four *[see Figure A.11.2.4.1.2(c)]*. However, if the building were further subdivided by a second fire wall meeting the requirements for a horizontal exit, no further reduction in stairways would be permitted in order to comply with the requirement that horizontal exits provide a maximum of one-half of egress capacity.

Copyright National Fire Protection Association
Provided by IHS under license with NFPA
No reproduction or networking permitted without license from IHS
Not for Resale

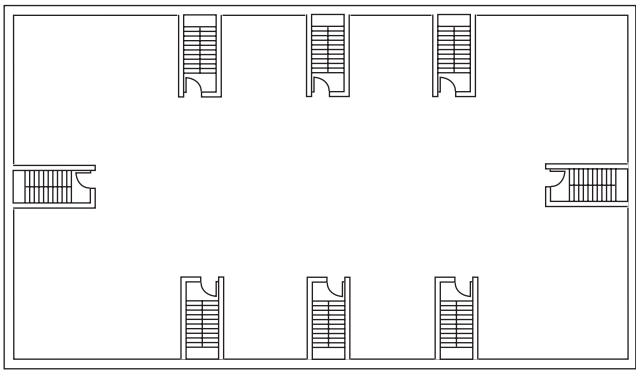

FIGURE A.11.2.4.1.2(a) Eight Exits, None via Horizontal Exit, Required to Provide the Necessary Egress Capacity.

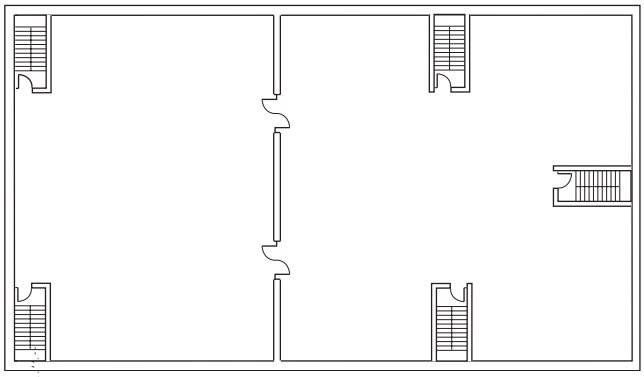

FIGURE A.11.2.4.1.2(b) Number of Stairs Reduced by Three Through Use of Two Horizontal Exits; Egress Capacity Not Reduced.

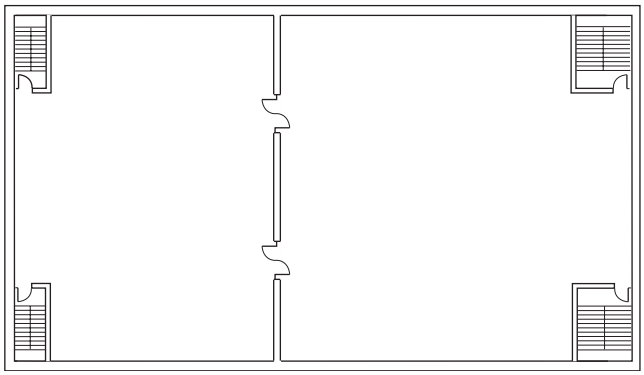

FIGURE A.11.2.4.1.2(c) Number of Stairs Further Reduced by Widening Stairs in Larger Compartment, but to Not Less Than One-half the Required Number and Capacity of Exits from That Compartment.

A.11.2.4.3.8 Fusible link–actuated automatic-closing doors do not qualify for use in horizontal exits under these provisions, as smoke might pass through the opening before there is sufficient heat to release the hold-open device.

Such doors are also objectionable because, once closed, they are difficult to open and would inhibit orderly egress.

A.11.2.5.7.1 The guards required by 11.2.2.4 for the unenclosed sides of ramps will usually meet this requirement where the ramp is not more than three stories high. Special architectural treatment, including application of such devices as metal or masonry screens and grilles, will usually be necessary to comply with the intent of the requirements for ramps over three stories in height.

A.11.2.5.7.2 Providing a pitch of ⅛ in./ft to ¼ in./ft (1 cm/m to 2 cm/m) will aid the shedding of water from a nominally horizontal surface.

A.11.2.6.1 Examples of building elements that might be arranged as exit passageways include hallways, corridors, passages, tunnels, underfloor passageways, or overhead passageways.

A.11.2.6.5 Where an exit passageway serves occupants on the level of exit discharge, as well as other floors, 11.2.6.5(1) permits and exemption from the requirement that the occupant loads be added, thus increasing the width of the exit passageway. The situation is the same as that in which occupants from the level of exit discharge join occupants from upper floors for a few feet of horizontal travel through a stair enclosure.

A.11.2.8 An exit passageway serves as a horizontal means of exit travel that is protected from fire in a manner similar to an enclosed interior exit stair. Where it is desired to offset exit stairs in a multistory building, an exit passageway can be used to preserve the continuity of the protected exit by connecting the bottom of one stair to the top of the stair that continues to the street floor. Probably the most important use of an exit passageway is to satisfy the requirement that at least 50 percent of the exit stairs discharge directly outside from multistory buildings *(see 11.7.2)*. Thus, if it is impractical to locate the stair on an exterior wall, an exit passageway can be connected to the bottom of the stair to convey the occupants safely to an outside exit door. In buildings of extremely large area, such as shopping malls and some factories, the exit passageway can be used to advantage where the travel distance to reach an exit would otherwise be excessive.

A.11.2.10 For requirements for replacement fire escape stairs or new fire escape stairs in existing buildings, see Chapter 15.

A.11.2.12.2.3 The clear width of not less than 48 in. (1220 mm) is needed for a three-person carry of an occupied wheelchair up or down a stair. This procedure, as well as the more difficult two-person wheelchair carry or roll, requires training and experience. Safer, alternative stair descent measures for transporting a person who normally requires a wheelchair include evacuation chairs and self-braking stair descent devices. In addition to having such devices available where needed, and having persons trained and experienced in their use, it is important to have people trained and experienced in wheelchair transfer techniques.

In view of the logistical difficulties, as well as the dangers inherent in carrying occupied wheelchairs or otherwise transporting their occupants on stairs, the preferred means of egress from an area of refuge consists of facilities normally employed for ingress and egress by people using wheelchairs. Foremost among these options are elevators meeting the fire fighter service requirements of ASME A17.1, *Safety Code for Elevators and Escalators*.

A.11.2.12.2.3(2) Stair descent devices using stair-bearing belted tracks, for example, provide a safer, more effective

Copyright National Fire Protection Association
Provided by IHS under license with NFPA
No reproduction or networking permitted without license from IHS
Not for Resale

evacuation option than carrying an occupied wheelchair or other carried device down the stairs and on landings. The use of stair descent devices is recommended, even if egress stairway width satisfies a requirement for 48 in. (1220 mm) of minimum clear width between stairway handrails or between a handrail and a landing wall.

The design, manufacture, selection, maintenance, and operation of stairway descent devices should take into account the following recommendations and general guidance information:

(1) The minimum carrying capacity of the device should be 300 lb (136 kg), rated for the maximum permitted stair slope or pitch of 42 degrees or 1.0 unit vertical for 1.1 units horizontal.
(2) The rated maximum carrying capacity and maximum stair pitch should be labeled on the device, and the device should only be operated within the labeled limits of load and stair slope or pitch.
(3) The maximum descent speed, without undue restraint by the operator(s), should be limited by device design to 30 in. (760 mm), measured along the slope of the stair.
(4) When operated according to manufacturer's instructions and loaded to its maximum stated capacity, the device should come reliably to a complete stop within a distance of 36 in. (910 mm), measured along the landing or stair slope, on a stair with a slope or pitch within the device's maximum stated capability, and the following also should apply:
    (a) Undue force should not be required to stop the device or, once stopped, to maintain it in a stationary position on the stairs.
    (b) On walking surfaces other than stairs, the device should maintain a parked position, without rolling, so that the operator can attend to other activities, including assisting the passenger to transfer from or to other mobility devices.
(5) Slowing or delays when transitioning between stairway landings and stair flights should cause no more than minimal delay to the movement of pedestrians using the stairway in the vicinity of the device and, generally, should not significantly reduce the flow of evacuees using the stairway system.
(6) When descending stairs, the device should be easily operable by one or two trained ambulatory adults and the following also should apply:
    (a) Above average weight or strength should not be required for proper operation.
    (b) Lifting or carrying of the device, when occupied, should normally not be required for descent.
(7) Unless designed specifically for use on stairs with nonrectangular treads, with operators trained for such use, the device should be operated only on stairways with straight flights having rectangular treads.
(8) On straight flights, the device should be designed to have supporting contact with at least two treads, except during the transition between landings and stair flights.
(9) The device should be equipped with restraining straps that securely hold the passenger, including arms and legs, to prevent injury, and the length and quantity of straps should be designed to accommodate a range of passenger sizes and weights up to the maximum capacity of the device.
(10) The seat or seat sling should have open sides and be positioned at an appropriate height to allow transfer with minimal operator assistance, and the specific procedure used for a particular transfer should be determined through discussion between the passenger and the operators.
(11) Setup of the device should be described in procedures posted on the device, should require no other tools or expertise beyond that of available operators, and should take approximately 10 seconds to set up from storage condition to being ready for transfer.
(12) In addition to descending stairs, the device should be able to travel across ramped or horizontal surfaces, such as stair landings and hallways, so that it can follow an entire egress route to the exterior of the building.
(13) The device's seating system should provide adequate support of the passenger to minimize the potential for discomfort or injury, recognizing that people with physical disabilities, who will be the main occupants of the device, are often unusually susceptible to pressure-related injuries and spasm while being unable to perceive the warning signs of pain.
(14) Water on the stairways should have no adverse effect on the operation of the device.
(15) If cabinets or storage covers are provided, they should include signage or labeling that clearly identifies the device and its use. The device should be readily retrievable from storage without use of a key or special tool.
(16) The building evacuation plan should include the location of the devices, a list of trained operators, a matching list of people with disabilities and other critical information as may be required for the building.
(17) The manufacturer of the device should provide comprehensive training materials with each device. All designated operators should be trained in accordance with these instructions. Evacuation drills that involve actual use of the device by the designated operators, including transfer and transport of building occupants with disabilities, should occur at least quarterly.
(18) The device should be inspected and tested annually in accordance with manufacturer's recommendations. Preventive maintenance should be performed in accordance to the manufacturer's recommendations.
(19) Device capabilities differing significantly from those spelled out in the foregoing recommendations (such as carrying capacity, higher normal speed and fail-safe braking systems) should be disclosed by the manufacturer in a manner readily known to operators, whose training should take this into account.
(20) Limitations of the device based on stair nosing geometry and nature of stairway covering should be disclosed by the manufacturer in specifications, operating instructions, and labeling.
(21) Minimum stairway width requirements, especially at landings where turns occur, should be disclosed by the manufacturer, and only devices appropriate to the building's stairways should be provided in the building.
(22) Carrying handles, if installed on the device, should provide secure gripping surfaces and adequate structural and geometric design to facilitate carrying by two or more operators. Carrying might be necessitated by damaged or otherwise irregular walking surfaces that do not facilitate rolling with the device's wheels or tracks. Carrying might also be necessitated by the existence of an ascending stair along the means of egress, for example, in the exit discharge path.

Copyright National Fire Protection Association
Provided by IHS under license with NFPA
No reproduction or networking permitted without license from IHS
Not for Resale

(23) Unless specialized operator training is undertaken, use of a stairway descent device on stairways with unusually large treads and on escalators should be attempted only if the device is designed for extra long distance between the tread nosings [for example, about 16 in. (405 mm) on escalators, as opposed to about 12 in. to 13 in. (305 mm to 330 mm) on typical exit stairways]. Such specialized training might entail maintaining a downward force on the device operating handle.

A.11.2.12.2.4 The use of elevators for egress, especially during an emergency such as a fire, is not an approach to be taken without considerable planning, ongoing effort, and a high degree of understanding by everyone involved with the evacuation of persons with mobility impairments. Due in part to the limited capacity of elevators, as well as to the conflicting demands for elevator use for fire-fighting activities, even elevators in accordance with 11.2.12.2.4 cannot be considered as satisfying any of the *Code*'s requirements for egress capacity, number of means of egress, or travel distance to an exit.

A.11.2.12.2.6 The instructions should include the following:

(1) Directions to find other means of egress
(2) Advice that persons able to use exit stairs do so as soon as possible, unless they are assisting others
(3) Information on planned availability of assistance in the use of stairs or supervised operation of elevators and how to summon such assistance
(4) Directions for use of the emergency communications system

To facilitate an adequate degree of understanding of the use of areas of refuge and of the associated assisted egress procedures, information should be provided to those using the facilities. The exact content of the information, its organization (for example, as a set of instructions), and its format (for example, either posted instructions in the area of refuge or information otherwise transmitted to facility users) should be determined on a case-by-case basis. The information should be tailored to the specific facility, its emergency plan, the intended audience, and the intended presentation format. The paragraphs that follow provide recommended information content addressing two situations.

Refuge with Elevator Use. An area of refuge provided in the elevator lobby serves as a staging area for persons unable to use stairs and needing assistance for their evacuation during an emergency. The elevator(s) will be taken out of automatic service and operated by emergency service personnel. Persons unable to evacuate down the exit stairs without assistance and needing transportation by elevator should make certain the elevator lobby doors are closed while they wait in the elevator lobby for assistance. The two-way communication system should be used if there is a delay of more than several minutes in the arrival of an elevator that will provide transportation to the ground floor. Alternatively, another refuge area, and assistance with evacuation, is available in the designated exit stair.

Refuge with Stair Use. An area of refuge within the designated exit stair serves as a staging area for persons needing assistance for their evacuation during an emergency. Persons unable to use the stairs unassisted, or who wish to move down the stairs at a slower pace, should wait on the stair landing. The two-way communication system should be used if assistance is needed.

A.11.2.12.3.1 Figure A.11.2.12.3.1 illustrates the application of the minimum space requirement to an area of refuge located within an exit stair enclosure. Note that each of the two required spaces is sufficient to allow the parking of a standard wheelchair. Preferably, such spaces should be provided adjacent to each other in a location where the presence of people taking temporary shelter in an area of refuge will be immediately apparent to rescue personnel and other evacuees.

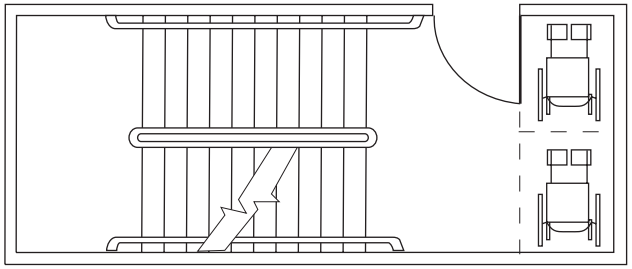

FIGURE A.11.2.12.3.1 Exit Stair Used as An Area of Refuge.

A.11.2.12.3.2 The method of meeting the tenability performance criteria required of an area of refuge of less than 1000 ft^2 (93 m^2) can involve controlling the exposing fire (for example, via automatic sprinkler protection), installing smoke-resisting doors in the smoke partitions, providing smoke control to prevent or limit smoke migration through cracks or other leakage paths *(see* NFPA 92A, *Standard for Smoke-Control Systems Utilizing Barriers and Pressure Differences)*, or providing other means or a combination of these means.

Calculations, if used, need to be based on established engineering relationships and equations. Such calculation procedures are described in NFPA 92A, *Principles of Smoke Management Systems* (Klote and Milke), and the SFPE *Handbook of Fire Protection Engineering*. Tenable conditions are those that maintain the temperature of any smoke in the area of refuge at less than 200°F (93°C) if the smoke is more than 60 in. (1525 mm) above the floor, and at less than 120°F (49°C) if the smoke descends below the 60 in. (1525 mm) level in the area of refuge. Also, if the smoke descends below the 60 in. (1525 mm) level, tenable conditions require not less than 16 percent oxygen and not more than 30,000 ppm/min exposure to carbon monoxide. The exposing conditions used in the calculations should be in accordance with the following:

(1) Where the exposing space is sprinkler protected, the temperature of the exposing smoke is 200°F (93°C), the smoke layer extends to the floor, the oxygen content is 16 percent, and the carbon monoxide concentration is 2000 ppm (0.2 percent).
(2) Where the exposing space is a nonsprinklered corridor finished with Class A interior wall and ceiling finish, the temperature of the exposing smoke is 600°F (315°C), the smoke layer extends to a level 24 in. (610 mm) above the floor, the oxygen content is 3 percent, and the carbon monoxide concentration is 50,000 ppm (5 percent).
(3) Where the exposing space is not a corridor, or where the exposing space is a corridor, the corridor is not finished with a Class A interior wall and ceiling finish, the temperature of the exposing smoke is 1500°F (815°C), the smoke layer extends to a level 24 in. (610 mm) above the floor, the oxygen content is 3 percent, and the carbon monoxide concentration is 50,000 ppm (5 percent).

Copyright National Fire Protection Association
Provided by IHS under license with NFPA
No reproduction or networking permitted without license from IHS
Not for Resale

A.11.2.12.3.4 Requirements for fire resistance ratings in excess of 1 hour, fire protection ratings in excess of 20 minutes, and prohibitions on duct penetrations appear in other *Code* sections. For example, if the barrier creating the area of refuge is also part of an exit stair enclosure that connects more than three stories or is a horizontal exit, a fire resistance rating of not less than 2 hours for the barrier and a fire protection rating of not less than 1½ hours for opening protectives, such as doors, would be required for most occupancies.

Generally, by providing one barrier that subdivides a floor area, two areas of refuge can be created. This subdivision method and the possibility of creating areas of refuge within compartmented elevator lobbies or on enlarged stair landings of exit stair enclosures make less onerous any requirement for a story to have more than one accessible means of egress.

A.11.2.13 Special consideration should be given prior to the application of alternating tread devices where children, the elderly, or physically disabled persons use such devices. These devices present obstacles in ascent and descent that differ from those for stairs and ladders.

A.11.2.13.1 It is the intent of 11.2.13 that elevators serving as a means of egress serve only independent towers or the tower portion of any integral structure. For elevators that are used as a component in the means of egress, the elevator lobbies, elevator shaft, and machine room need to be protected from the effects of fire.

A.11.2.13.6 One or more of the following approaches can be used to restrict exposure of elevator equipment to water:

(1) A combination of sealed elevator lobby doors, sloped floors, floor drains, and sealed elevator shaft walls is used.
(2) The elevator is mounted on the building exterior that normally operates in the elements, and seals are used on the elevator lobby doors.
(3) The elevator shaft is separated from the building at each floor by an exterior elevator lobby designed to prevent water entry into the elevator shaft.

Information gained from ongoing research concerning waterflow and elevators could lead to the development of water-resistive or water-protected elevator equipment specifically for fire applications. Such equipment would be used only with the building elements (for example, sealed elevator lobby doors, sloped floors, floor drains) for which it is developed. Further information is available from the NIST publication, *Feasibility of Fire Evacuation by Elevators at FAA Control Towers*.

A.11.2.13.7 Cooling equipment dedicated to the elevator machine room can be used to minimize requirements for standby power.

A.11.2.13.8 Communication between elevator lobbies and a central control point can be by telephone or intercom. Auditory alarms should be designed so that they do not interfere with people talking on communications systems.

A.11.2.13.9 Smoke detection in the elevator lobby will result in a Phase I recall of the elevators. The elevators will then be automatically taken out of normal service and will be available to be operated by emergency service personnel.

A.11.3.1.2 The normal occupant load is not necessarily a suitable criterion, as the greatest hazard can occur when an unusually large crowd is present, which is a condition often difficult for authorities having jurisdiction to control by regulatory measures. The principle of this *Code* is to provide means of egress for the maximum probable number of occupants, rather than to attempt to limit occupants to a number commensurate with available means of egress. However, limits of occupancy are specified in certain special cases for other reasons.

Recommended occupant load factors for components of large airport terminal buildings are given in Table A.11.3.1.2. However, the authority having jurisdiction might elect to use different occupant load factors, provided that egress requirements are satisfied.

Table A.11.3.1.2 Airport Terminal Occupant Load Factors

Airport Terminal Area	ft^2 (gross)	m^2 (gross)
Concourse	100	9.3
Waiting areas	15	1.4
Baggage claim	20	1.9
Baggage handling	300	27.9

Mall Buildings. The figure used in determining the occupancy load for mall shopping centers of varying sizes was arrived at empirically by surveying over 270 mall shopping centers, by studying mercantile occupancy parking requirements, and by observing the number of occupants per vehicle during peak seasons.

These studies show that, with an increase in shopping center size, there is a decrease in the number of occupants per square foot of gross leasable area.

This phenomenon is explained when considering the fact that, above a certain shopping center gross leasable area [approximately 600,000 ft^2 (56,000 m^2)], a multiplicity of the same types of stores exists. The purpose of duplicate types of stores is to increase the choices available to a customer for any given type of merchandise. Therefore, when shopping center size increases, the occupant load increases as well, but at a declining rate. In using Table 11.3.1.2, the occupant load factor is applied only to the gross leasable area that uses the mall as a means of egress.

A.11.3.4.1.1 Paragraph 11.3.4.1.1 provides for minimum widths for small spaces such as individual offices. The intent is that this exemption applies to spaces formed by furniture and movable walls so that accommodations can easily be made for mobility-impaired individuals. One side of a path could be a fixed wall, provided that the other side is movable. The exemption does not exempt the door widths or widths of fixed-wall corridors, regardless of the number of people or length.

Figure A.11.3.4.1.1 presents selected anthropometric data for adults. The male and female figures depicted in the figure are average, 50th percentile, in size. Some dimensions apply to very large, 97.5 percentile, adults (noted as 97.5 P).

A.11.5.1.1.1 See A.11.5.1.6. A dead end exists where an occupant enters a corridor thinking there is an exit at the end and, finding none, is forced to retrace the path traveled to reach a choice of egress travel paths. Although relatively short dead ends are permitted by this *Code*, it is better practice to eliminate them wherever possible, as they increase the danger of persons being trapped in case of fire. Compliance with the dead-end limits does not necessarily mean that the requirements for remoteness of exits have been met. Such lack of compliance is particularly true in small buildings or buildings with short public hallways. Adequate remoteness can be obtained in such cases by further reducing the length of dead ends. *(See also 11.5.1.6.)*

Copyright National Fire Protection Association
Provided by IHS under license with NFPA
No reproduction or networking permitted without license from IHS
Not for Resale

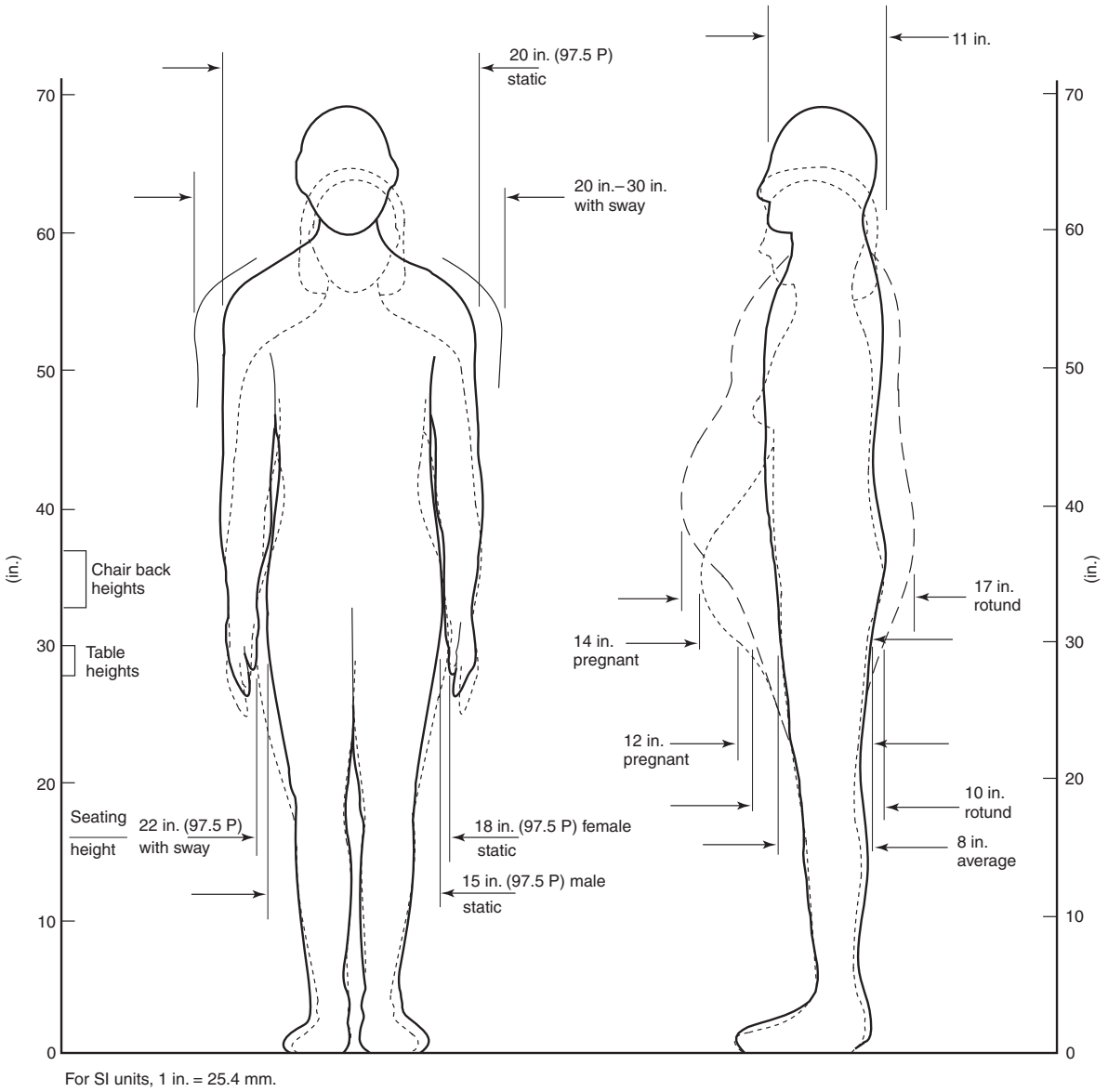

FIGURE A.11.3.4.1.1 Anthropometric Data for Adults — Male and Female Figures.

A.11.5.1.4.2 Figure A.11.5.1.4.2(a) through Figure A.11.5.1.4.2(e) illustrate the method of measurement intended by 11.5.1.4.2.

A.11.5.1.5 It is difficult in actual practice to construct scissor stairs so that products of combustion that have entered one stairway do not penetrate into the other. Use as separate required exits is prohibited. The term *limited-combustible* is intentionally not included in 11.5.1.4.5. The user's attention is directed to 3.3.388.9, *Limited-Combustible (Material),* and 3.3.388.11, *Noncombustible Material.*

A.11.5.1.6 The terms *dead end* and *common path of travel* are commonly used interchangeably. While the concepts of each are similar in practice, they are two different concepts.

A common path of travel exists where a space is arranged so that occupants within that space are able to travel in only one direction to reach any of the exits or to reach the point at which the occupants have the choice of two paths of travel to remote exits. Part (a) of Figure A.11.5.1.6 is an example of a common path of travel.

While a dead end is similar to a common path of travel, a dead end can exist where there is no path of travel from an occupied space but can also exist where an occupant enters a corridor thinking there is an exit at the end and, finding none, is forced to retrace his or her path to reach a choice of exits. Part (b) of Figure A.11.5.1.6 is an example of such a dead-end arrangement.

Combining the two concepts, part (c) of Figure A.11.5.1.6 is an example of a combined dead-end/common path of travel problem.

Common paths of travel and dead-end travel are measured using the same principles used to measure travel distance as described in Section 11.6. Starting in the room shown in part

Copyright National Fire Protection Association
Provided by IHS under license with NFPA
No reproduction or networking permitted without license from IHS
Not for Resale

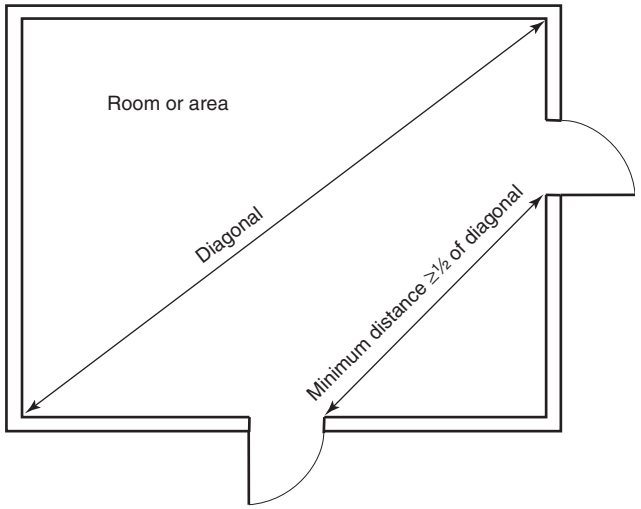

FIGURE A.11.5.1.4.2(a) Diagonal Rule for Exit Remoteness.

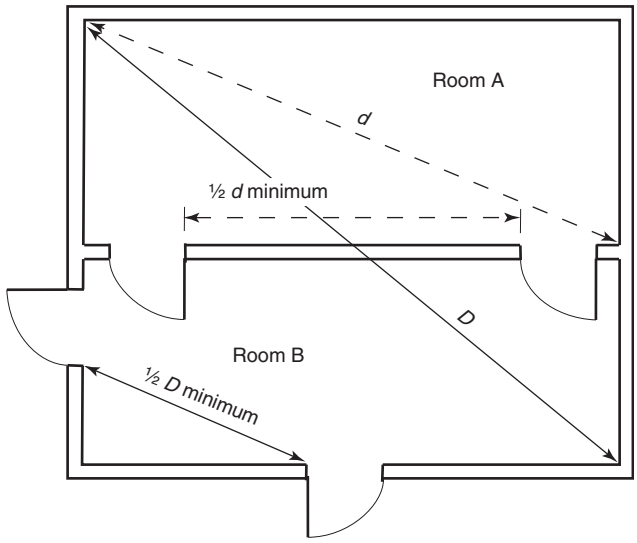

FIGURE A.11.5.1.4.2(b) Diagonal Rule for Exit and Exit Access Remoteness.

(d) of Figure A.11.5.1.6, measurement is made from the most remote point in the room, A, along the natural path of travel, and through the doorway along the centerline of the corridor to point C, located at the centerline of the corridor, which then provides the choice of two different paths to remote exits; this is common path of travel. The space between point B and point C is a dead end. *(See 3.3.105, Common Path of Travel.)*

A.11.5.2.1 It is not the intent that an area with equipment such as a beverage brewpot, microwave oven, and a toaster be considered a kitchen.

A.11.5.2.2 Doors that lead through wall paneling and that harmonize in appearance with the rest of the wall to avoid detracting from some desired aesthetic or decorative effect are not acceptable, as casual occupants might not be aware of such means of egress, even though it is visible.

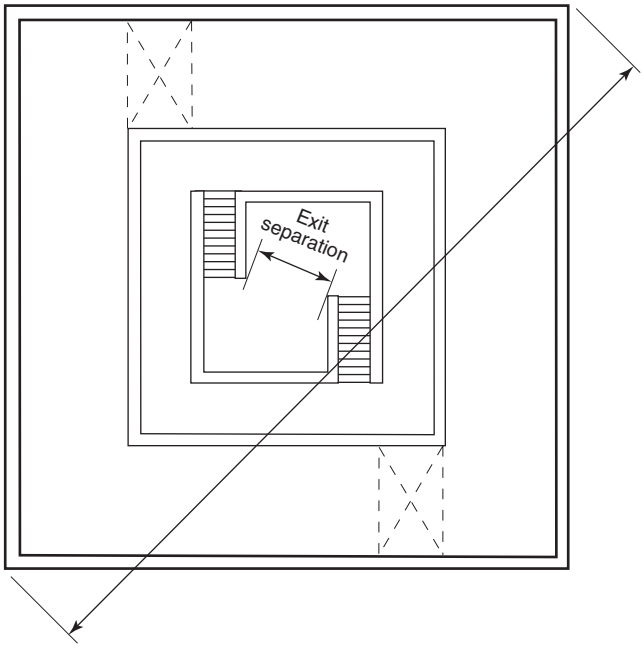

FIGURE A.11.5.1.4.2(c) Exit Separation and Diagonal Measurement of Area Served.

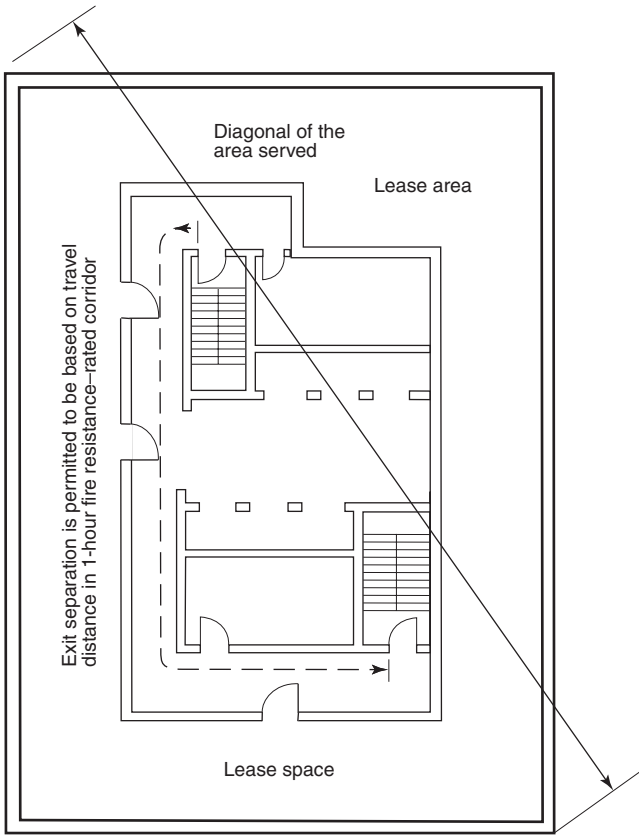

FIGURE A.11.5.1.4.2(d) Exit Separation Measured Along Corridor Path.

Copyright National Fire Protection Association
Provided by IHS under license with NFPA
No reproduction or networking permitted without license from IHS
Not for Resale

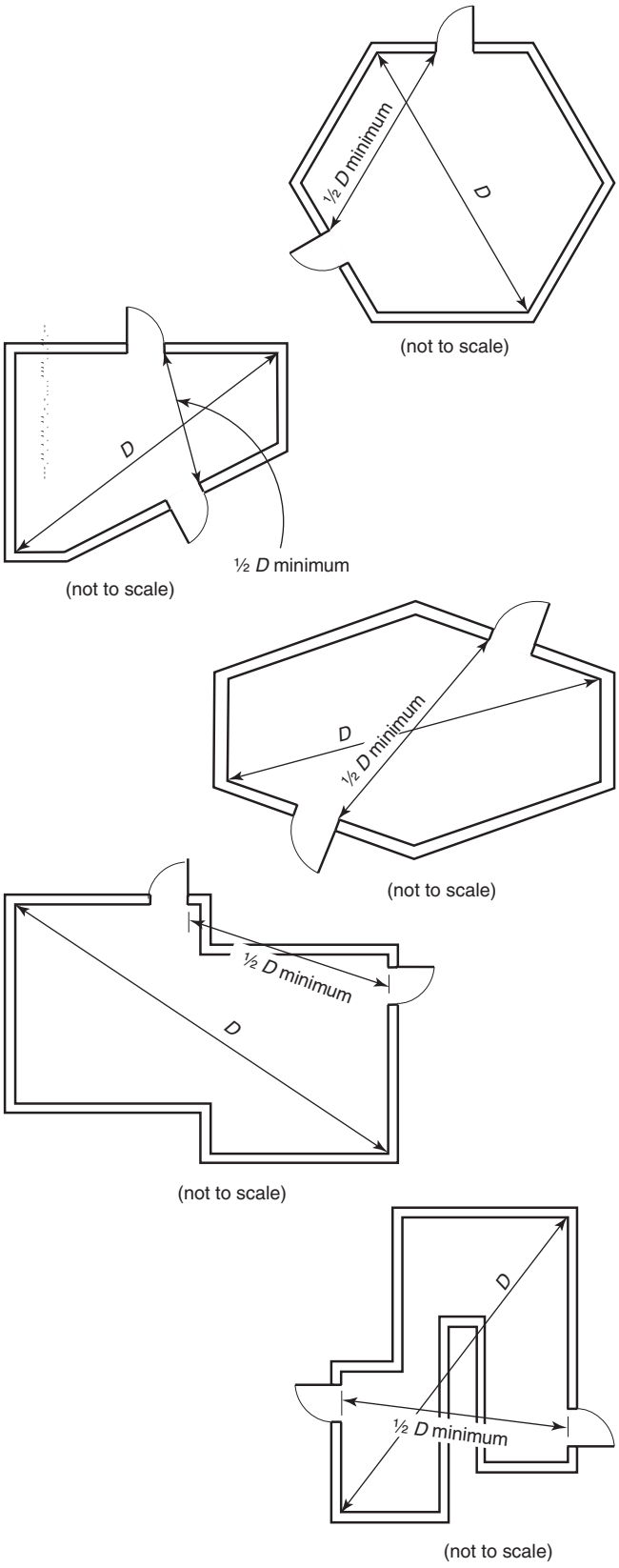

FIGURE A.11.5.1.4.2(e) Diagonal Measurement for Unusually Shaped Areas.

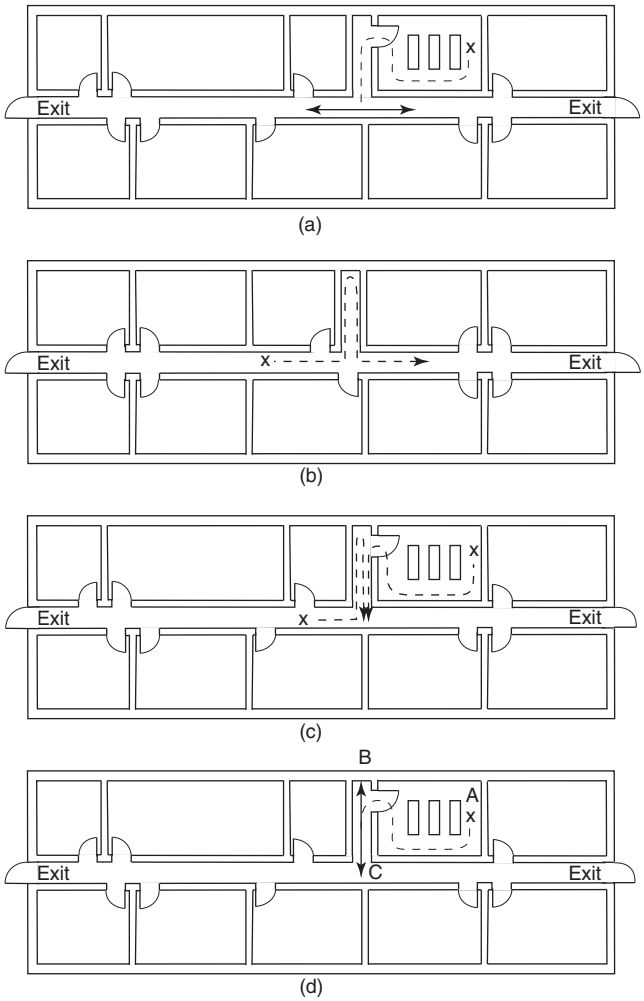

FIGURE A.11.5.1.6 Common Paths of Travel and Dead-End Corridors.

A.11.5.4.1 An accessible means of egress should comply with the accessible route requirements of ICC/ANSI A117.1, *American National Standard for Accessible and Usable Buildings and Facilities.*

A.11.6.2 The natural exit access (path of travel) will be influenced by the contents and occupancy of the building. Furniture, fixtures, machinery, or storage can serve to increase the length of travel. It is good practice in building design to recognize the influence of contents and occupancy by spacing exits for a completely open floor area at closer intervals than is required, thus reducing the hazard of excessive travel distances due to the introduction of furniture, fixtures, machinery, or storage and minimizing the possibility of violating the travel distance requirements of this *Code*.

A.11.6.3 Examples of locations where open stairways might exist include between mezzanines or balconies and the floor below.

A.11.7.1 An exit from the upper stories, in which the direction of egress travel is generally downward, should not be arranged so that it is necessary to change to travel in an upward direction at any point before discharging to the outside. A

Copyright National Fire Protection Association
Provided by IHS under license with NFPA
No reproduction or networking permitted without license from IHS
Not for Resale

similar prohibition of reversal of the vertical component of travel should be applied to exits from stories below the floor of exit discharge. However, an exception is permitted in the case of stairs used in connection with overhead or underfloor exit passageways that serve the street floor only.

It is important that ample roadways be available from buildings in which there are large numbers of occupants so that exits will not be blocked by persons already outside. Two or more avenues of departure should be available for all but very small buildings. Location of a large theater, for example, on a narrow dead-end street might be prohibited by the authority having jurisdiction under this rule, unless some alternate way of travel to another street is available.

Exterior walking surfaces within the exit discharge are not required to be paved and often are provided by grass or similar surfaces. Where discharging exits into yards, across lawns, or onto similar surfaces, in addition to providing the required width to allow all occupants safe access to a public way, such access also is required to meet the following:

(1) Provisions of 11.1.7 with respect to changes in elevation
(2) Provisions of 11.2.2 for stairs, as applicable
(3) Provisions of 11.2.5 for ramps, as applicable
(4) Provisions of 11.1.10 with respect to maintaining the means of egress free of obstructions that would prevent its use, such as snow and the need for its removal in some climates

A.11.8.1.1 Illumination provided outside the building should be to either a public way or to a point located at a distance from the building that is considered safe, whichever is closest to the building being evacuated.

A.11.8.1.3 A desirable form of means of egress lighting is by lights recessed in walls about 12 in. (305 mm) above the floor. Such lights are not likely to be obscured by smoke.

The provision of 11.8.1.3(4) exempts those processes, such as manufacturing or handling of photosensitive materials, that cannot be performed in areas provided with the minimum specified lighting levels. The use of spaces with lighting levels below 1 ft-candle (10 lux) might necessitate additional safety measures, such as written emergency plans, training of new employees in emergency evacuation procedures, and periodic fire drills.

A.11.8.1.4 An example of the failure of any single lighting unit is the burning out of an electric bulb.

A.11.8.2.1 An example of a power source with reasonably ensured reliability is a public utility electric service.

A.11.9.1.1 Emergency lighting provided outside the building should provide illumination to either a public way or to a point located at a distance from the building that is considered safe, whichever is closest to the building being evacuated.

A.11.9.2.1 The illumination uniformity ratio is determined by the following formula:

$$\frac{\text{Maximum illumination at any point}}{\text{Minimum illumination at any point}}$$

A.11.9.2.3 Where approved by the authority having jurisdiction, this requirement is permitted to be met by means such as are specified in the paragraphs that follow.

Two separate electric lighting systems with independent wiring are permitted, each adequate alone to provide the specified lighting. One such system is permitted to be supplied from an outside source, such as a public utility service, and the other from an electric generator on the premises driven by an independent source of power. Both sources of illumination should be in regular simultaneous operation whenever the building is occupied during periods of darkness.

An electric circuit, or circuits, used only for means of egress illumination, with two independent electric sources arranged so that, on the failure of one, the other will automatically and immediately operate is permitted. One such source is permitted to be a connection from a public utility or similar outside power source, and the other an approved storage battery with suitable provision to keep it automatically charged. The approved storage battery should be provided with automatic controls that, after operation of the battery due to failure of the primary power source, or for the purpose of turning off the primary electric source for the lights, will shut off the battery after its specified period of operation and will automatically recharge and ready the battery for further service when the primary current source is turned on again.

Electric battery-operated emergency lighting systems complying with the provisions of 11.9.2.3 and operating on a separate circuit and at a voltage different from that of the primary light can be used where permitted. *(See* NFPA 70, *National Electrical Code.)*

These requirements are not intended to prohibit the connection of a feeder serving exit lighting and similar emergency functions ahead of the service disconnecting means, but such connection does not constitute an acceptable alternate source of power. Such a connection furnishes only supplementary protection for emergency electrical functions, particularly where intended to allow the fire department to open the main disconnect without hampering exit activities. Provision should be made to alert the fire department that certain power and lighting is fed by an emergency generator and will continue operation after the service disconnect is opened.

Where emergency lighting is provided by automatic transfer between normal power service and an emergency generator, it is the intent to prohibit the installation, for any reason, of a single switch that can interrupt both energy sources.

A.11.10.1.2 Where a main entrance also serves as an exit, it will usually be sufficiently obvious to occupants so that no exit sign is needed.

The character of the occupancy has a practical effect on the need for signs. In any assembly occupancy, hotel, department store, or other building subject to transient occupancy, the need for signs will be greater than in a building subject to permanent or semipermanent occupancy by the same people, such as an apartment building where the residents are presumed to be familiar with exit facilities by reason of regular use thereof. Even in a permanent residence-type building, however, there is a need for signs to identify exit facilities, such as outside stairs that are not subject to regular use during the normal occupancy of the building.

There are many types of situations where the actual need for signs is debatable. In cases of doubt, however, it is desirable to be on the safe side by providing signs, particularly as posting signs does not ordinarily involve any material expense or inconvenience.

The requirement for the locations of exit signs visible from any direction of exit access is illustrated in Figure A.11.10.1.2.

Copyright National Fire Protection Association
Provided by IHS under license with NFPA
No reproduction or networking permitted without license from IHS
Not for Resale

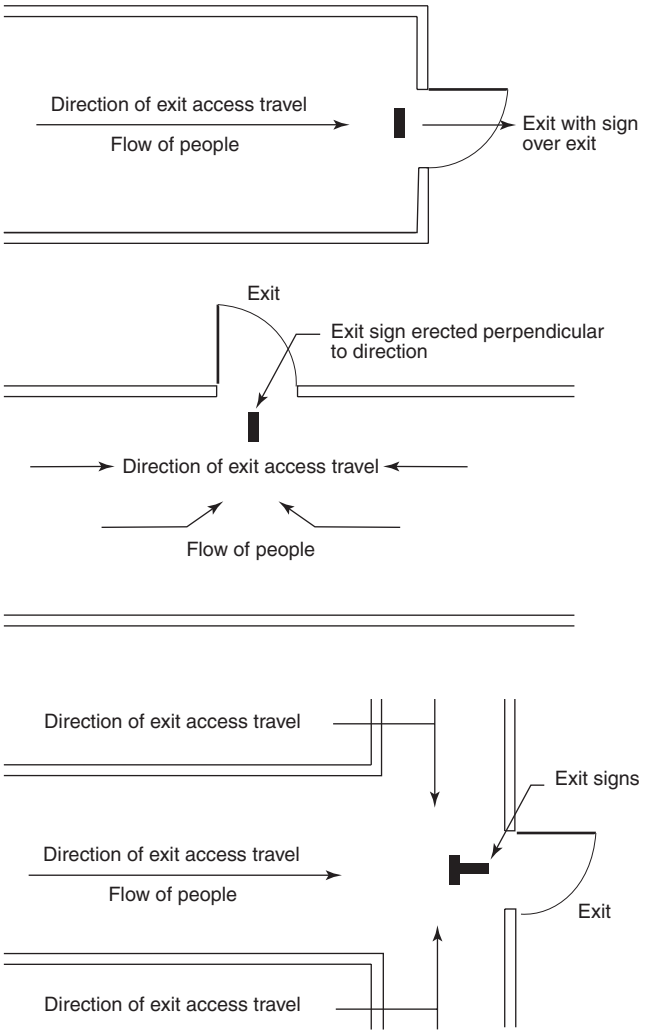

FIGURE A.11.10.1.2 Location of Exit Signs.

A.11.10.1.4 For externally illuminated signs in accordance with 11.10.6, and internally illuminated signs listed without a viewing distance, the rated viewing distance should be considered to be 100 ft (30 m). However, placing signs to meet the 100 ft (30 m) viewing distance in other than exit access corridors might create operating difficulties or encourage placement of a sign above the line of sight. To resolve the viewing distance versus placement issue, consideration should be given to increasing the level of illumination and the size of the exit legend to the viewing distance proportionally if signs are placed at greater distances.

A.11.10.1.5 See 11.10.4.

A.11.10.1.6 See 3.3.327.2, *Internally Illuminated.*

A.11.10.1.8 In stores, for example, an otherwise adequate exit sign could be rendered inconspicuous by a high-intensity illuminated advertising sign located in the immediate vicinity.

Red is the traditional color for exit signs and is required by law in many places. However, at an early stage in the development of the *Code*, a provision made green the color for exit signs, following the concept of traffic lights in which green indicates safety and red is the signal to stop. During the period when green signs were specified by the *Code*, many such signs were installed, but the traditional red signs also remained. In 1949, the Fire Marshals Association of North America voted to request that red be restored as the required exit sign color, as it was found that the provision for green involved difficulties in law enactment that were out of proportion to the importance of safety. Accordingly, the 10th edition of the *Code* specified the use of red where not otherwise required by law. The present text avoids any specific requirement for color on the assumption that either red or green will be used in most cases and that there are some situations in which a color other than red or green could actually provide better visibility.

A.11.10.2 A sign complying with 11.10.2 indicating the direction of the nearest approved exit should be placed at the point of entrance to any escalator or moving walk. *(See A.11.10.3.)*

A.11.10.3 Pictograms are permitted to be used in lieu of, or in addition to, signs with text. Where graphics are used, the symbols provided in NFPA 170, *Standard for Fire Safety Symbols*, should be used. Such signs need to provide equal visibility and illumination and are to comply with the other requirements of Section 11.10.

A.11.10.4 It is not the intent of this paragraph to require emergency lighting but only to have the sign illuminated by emergency lighting if emergency lighting is required and provided.

It is not the intent to require that the entire stroke width and entire stroke height of all letters comprising the word EXIT be visible per the requirements of 11.10.6.3 under normal or emergency lighting operation, provided that the sign is visible and legible at a 100 ft (30 m) distance under all room illumination conditions.

A.11.10.5.1 See A.11.8.1.3.

A.11.10.5.2 It is the intent to prohibit a freely accessible light switch to control the illumination of either an internally or externally illuminated exit sign.

A.11.10.5.2.2 The rate of flashing repetition permitted by 11.10.5.2.2 should be approximately one cycle per second, and the duration of the off-time should not exceed ¼ second per cycle. During on-time, the illumination levels need to be provided in accordance with 11.10.6.3. Flashing signs, when activated with the fire alarm system, might be of assistance.

A.11.10.6.1 Experience has shown that the word EXIT, or other appropriate wording, is plainly legible at 100 ft (30 m) if the letters are as large as specified in 11.10.6.1.

A.11.10.6.2 Figure A.11.10.6.2 shows examples of acceptable locations of directional indicators with regard to left and right orientation. Directional indicators are permitted to be placed under the horizontal stroke of the letter T, provided that the spacing of not less than ⅜ in. (10 mm) is maintained from the horizontal and vertical strokes of the letter T.

EXIT›
‹EXIT
‹EXIT›

FIGURE A.11.10.6.2 Directional Indicators.

Copyright National Fire Protection Association
Provided by IHS under license with NFPA
No reproduction or networking permitted without license from IHS
Not for Resale

A.11.10.6.3 Colors providing a good contrast are red or green letters on matte white background. Glossy background and glossy letter colors should be avoided.

The average luminance of the letters and background is measured in foot lamberts or candela per square meter. The contrast ratio is computed from these measurements by the following formula:

$$\text{Contrast} = \frac{L_g - L_e}{L_g}$$

where:
L_g = greater luminance [ft-lamberts (cd/m^2)]
L_e = lesser luminance [ft-lamberts (cd/m^2)]

Either variable, L_g or L_e, is permitted to represent the letters, and the remaining variable represents the background. The average luminance of the letters and background can be computed by measuring the luminance at the positions indicated in Figure A.11.10.6.3 by circled numbers.

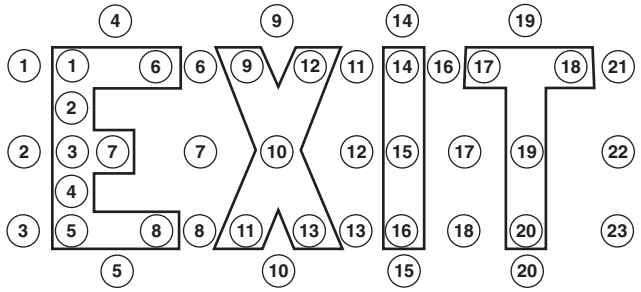

FIGURE A.11.10.6.3 Measurement of Exit Sign Luminance.

A.11.10.7.2 Photoluminescent signs need a specific minimum level of light on the face of the sign to ensure that the sign is charged for emergency operation and legibility in both the normal and emergency modes. Additionally, the type of light source (for example, incandescent, fluorescent, halogen, metal halide) is important. Each light source produces different types of visible and invisible light (for example, UV) that might affect the ability of some photoluminescent signs to charge and might also affect the amount of light output available during emergency mode. A photoluminescent sign would not be suitable where the illumination levels are permitted to decline. The charging light source should not be connected to automatic timers, because the continuous illumination of the sign is needed; otherwise, the sign illumination would not be available because it would be discharged.

A.11.10.8.3 The likelihood of occupants mistaking passageways or stairways that lead to dead-end spaces for exit doors and becoming trapped governs the need for exit signs. Thus, such areas should be marked with a sign that reads as follows:

NO EXIT

Supplementary identification indicating the character of the area, such as TO BASEMENT, STOREROOM, LINEN CLOSET, or the like, is permitted to be provided. *(See A.11.10.2.)*

A.11.10.8.4(1) These signs are to be used in place of signs that indicate that elevators are not to be used during fires. Examples of these signs include the following:

(1) In the event of fire, this elevator will be used by the fire department for evacuation of people.
(2) PROTECTED ELEVATOR—USABLE IN EMERGENCIES

A.11.10.8.4(2) The wording of these signs should reflect human behavior in fires and the control specifics of the elevator system. Paragraph 11.10.8.2 addresses signs, but provisions for notification of the vision impaired need to be considered. For information about human behavior with respect to elevator evacuation, see Groner and Levin, "Human Factor Considerations in the Potential for Using Elevators in Building Emergency Evacuation Plans"; Groner and Levin, "Human Behavior Aspects of Staging Areas for Fire Safety in GSA Buildings"; and Groner and Levin, "Human Factor Considerations for the Potential Use of Elevators for Fire Evacuation of FAA Air Traffic Control Towers." Some examples of messages on signs that could be displayed are shown in Table A.11.10.8.4(2).

Table A.11.10.8.4(2) Elevator Status Messages

Elevator Status	Message
Normal use	Elevator in Service
Elevators recalled and waiting for fire service	Please Wait for Fire Department or Use Stairs
Elevator out of service	Elevator Out of Service

A.14.1 Other guidelines include the following:

Sanitary Facilities. Temporary sanitary facilities should be provided on sites of construction and demolition in accordance with the *Uniform Plumbing Code.*

Walkway. A walkway not less than 48 in. (1220 mm) wide should be maintained on the sidewalk in front of the building site during construction, alteration, or demolition, unless the public agency having jurisdiction authorizes the sidewalk to be fenced and closed. Adequate signs and railings should be provided to direct pedestrian traffic. The walkway should be capable of supporting a uniform live load of 150 lb/ft^2 (720 N/m^2). A durable wearing surface should be provided.

Fences and Railings. Pedestrian traffic should be protected by a railing on the street side and, where the walkway extends into the roadway, by a railing adjacent to excavations and by such other protection, as appropriate.

Railings should be substantially built and, where of wood, should be constructed of new material having a nominal size of at least 2 in. × 4 in. (51 mm × 100 mm). Railings should be at least 42 in. (1065 mm) high and, where adjacent to excavations, should be provided with a midrail.

Fences should be solid, substantially built, not less than 8 ft (2440 mm) above grade, and placed on the side of the walkway nearest the building site. Fences should extend the entire length of the building site, and each end should be returned to the building line. Openings in fences should be protected by doors that are normally closed.

All fences should be provided with a 2 in. × 4 in. (51 mm × 100 mm) plate, top and bottom, and should be well-braced. The fence material should be of minimum ¾ in. (19 mm) boards or ¼ in. (6.3 mm) plywood. Plywood fences should conform to the following:

(1) Plywood panels should be bonded with an adhesive identical to that used for exterior plywood.
(2) Plywood of ¼ in. (6 mm) or 5⁄16 in. (8 mm) thickness should have studs spaced not more than 24 in. (610 mm) on center.

Copyright National Fire Protection Association
Provided by IHS under license with NFPA
No reproduction or networking permitted without license from IHS
Not for Resale

(3) Plywood of ⅜ in. (10 mm) or ½ in. (13 mm) thickness should have studs spaced not more than 48 in. (1220 mm) on center, provided that a 2 in. × 4 in. (51 mm × 100 mm) stiffener is placed horizontally at midheight where the stud spacing exceeds 24 in. (610 mm) on center.
(4) Plywood ⅝ in. (16 mm) or thicker should not span over 8 ft (2440 mm).

Protective Canopies. Protective canopies should have a clear height of 8 ft (2440 mm) above the walkway. The roof should be tightly sheathed. The sheathing should be ½ in. (13 mm) nominal wood planking or the equivalent. Every canopy should have a solid fence built along its entire length on the construction side. If materials are stored or work is done on the roof of the canopy, the street sides and ends of the canopy roof should be protected by a tight curb board not less than 12 in. (305 mm) high and a railing not less than 42 in. (1065 mm) high.

The protective canopy should be designed to carry the loads to be imposed but should be capable of supporting a live load of not less than 150 lb/ft^2 (720 N/m^2). In lieu of such design, a protection canopy supporting not less than 150 lb/ft^2 (720 N/m^2) should be permitted to be constructed as follows:

(1) Footings should be continuous 2 in. × 6 in. (51 mm × 150 mm) members with scabbed joints.
(2) Posts not less than 4 in. × 6 in. (100 mm × 150 mm) should be provided on both sides of the canopy and spaced not more than 12 ft (3660 mm) center-to-center.
(3) Each post should be knee-braced to joists and stringers by members 48 in. (1220 mm) long and not less than 2 in. × 4 in. (51 mm × 100 mm thick).
(4) Stringers not less than 4 in. × 12 in. (100 mm × 305 mm) should be placed on edge upon the posts.
(5) Joists resting on the stringers should be at least 2 in. × 8 in. (51 mm × 205 mm) and should be spaced not more than 24 in. (610 mm) center-to-center.
(6) The deck should be of planks at least 2 in. (51 mm) thick nailed to the joists.
(7) A curb not less than 2 in. × 12 in. (51 mm × 305 mm) should be set on edge along the outside edge of the deck.

Protection canopies for new light-frame construction not exceeding two stories should be permitted to be designed for a live load of 75 lb/in.^{2} (51,700 N/m^2) or the load to be imposed, whichever is greater.

Protection of Pedestrians. No person should place or store any material or equipment necessary for the work under a building permit on a street, alley, or public sidewalk, and all work should be performed only in accordance with the provisions of Chapter 14.

No person should perform any work on any building or structure if doing so would endanger pedestrians on the street that abuts the property line, unless the pedestrians are protected as specified in Chapter 14.

Any material or structure temporarily occupying public property, including fences and walkways, should be adequately lighted between sunset and sunrise.

Temporary Use of Streets or Alleys. The use of public property should meet the requirements of the authority having jurisdiction. Whenever requested, plot plans and construction details should be submitted for review by the authority having jurisdiction.

Maintenance and Removal of Protective Devices. Required protective devices should be maintained in place and kept in good order for the entire length of time pedestrians are to be endangered. Every protection fence or canopy should be removed within 30 days after such protection is no longer required for protection of pedestrians.

Demolition. The work of demolishing any building should be done in accordance with Section 14.1 and should not be commenced until the required pedestrian protection structures are in place. The authority having jurisdiction should be permitted to require the permittee to submit plans and a complete schedule for demolition. Where such plans and schedule are required, no work should be done until the plans and schedule are approved by the authority having jurisdiction.

Storage of Materials and Equipment. Materials and equipment used in construction and demolition should be stored in accordance with the regulations of the authority having jurisdiction.

Materials and equipment necessary for work to be done under a permit should not be placed or stored on public property so as to obstruct the free and convenient approach to, and use of, a fire hydrant, fire or police alarm box, utility box, catch basin, or manhole, or to interfere with the free flow of water in a street or alley gutter.

Mixing, handling, and storing of mortar, concrete, or other material on public property should be done in a manner that will not deface public property or create a nuisance.

Storage of Combustible Materials. Storage of combustible materials should not be permitted under or near welding operations.

In buildings of concrete construction, forms of combustible material should be stripped from the concrete and removed from the premises as soon as possible. No part of the building should be used for storage of combustible material until the concrete forms have been removed.

Storage of material under or on stairs, or in stairways or adjacent to stair openings, should not be permitted.

Demolition Operations.

Unobstructed Passageways. Walkways and passageways should be provided for the use of workers, who should be instructed to use them, and all such walkways and passageways should be adequately lighted and free from debris and other materials.

Protruding nails and fastenings in lumber should be withdrawn, hammered in, or bent over as soon as the lumber is removed from the structure being demolished, or all lumber from demolition operations should be placed in piles for cleaning or disposal.

Standards of Operation. All persons engaged in demolition work or entering the site of a demolition project should be required to wear protective headgear meeting the requirements for Type I or Type II headgear, Class A or Class B, as set forth in ANSI Z2, *Standard Safety Code for Head, Eye and Respiratory Protection.*

Workers using jackhammers or engaged in work that causes flying chips or particles likely to damage the eyes should be furnished with safety goggles with strength-tested lenses conforming to the requirements for chippers goggles, as set forth in ANSI Z2.

Persons required to work in dusty areas should be furnished with dust filter–type respirators, as set forth in ANSI Z2.

Blasting operations should be performed in accordance with the requirements of NFPA 1, *Uniform Fire Code.*

Warning Signs and Lights. Danger signs should be conspicuously posted around the property being demolished, and barricades should be provided at doorways and thoroughfares giving access to the property. Barricades should be in place at all times, except during the actual passage of workers and equipment.

Copyright National Fire Protection Association
Provided by IHS under license with NFPA
No reproduction or networking permitted without license from IHS
Not for Resale

During hours of darkness, red or amber lights or flares should be placed on or around all barricades in areas of public use.

Preparatory Measures. If a structure to be demolished has been partially wrecked by fire, flood, explosion, wind, or other causes, the walls should be braced or shored in accordance with the requirements of Chapter 37.

Electric power, gas, water, steam, and other services should be disconnected, capped, or otherwise controlled at the building line or curb before demolition work is started. In each case, the utility or service company concerned should be notified in advance and its cooperation obtained. Utility boxes, police or fire alarm boxes, and fire hydrants should be protected as required in Section 14.3.

Floor openings and shafts should be boarded over or enclosed with substantial guardrails.

Ground Level Protection. Before demolition is started, every sidewalk or public thoroughfare adjacent to the site should be either closed or barricaded or should be protected as specified herein. Thoroughfares open to the public should be kept clear and unobstructed at all times.

If the structure to be demolished is more than two stories or 25 ft (7620 mm) high, measured from sidewalk or street level, and the horizontal distance from the inside of the sidewalk to the structure is 15 ft (4570 mm) or less, a sidewalk shed or canopy should be constructed over the entire length of the sidewalk adjacent to the structure. The shed or canopy should be wide enough to accommodate pedestrian traffic without causing congestion. Sidewalk sheds and canopies should be lighted by either natural or artificial means sufficient to ensure safety at all times. Sidewalk sheds should be constructed in accordance with the paragraphs that follow.

A roof or deck should be constructed consisting of planking not less than 2 in. (51 mm) thick, closely laid and made watertight, and should be designed to sustain a load of not less than 150 lb/ft^2 (720 N/m^2). A minimum clearance of 7 ft (2135 mm) should be maintained between the underside of the roof structure and the sidewalk.

If the roof or deck is to be used for the storage of material, the design should provide for additional load capacity to accommodate safely the planned storage and should be approved by the authority having jurisdiction. Where used for storage, the outside edge and ends of the deck or roof should be provided with a substantial enclosure at least 42 in. (1065 mm) above the deck of the shed. Such enclosures should be permitted to be vertical or inclined outward at an angle of approximately 45 degrees and should consist of boards laid close together, secured to braced uprights or toe boards and galvanized wire netting formed of not less than 16 U.S. gauge wire and 1½ in. (38 mm) mesh.

Unless the top deck of the sidewalk shed is built solidly against the face of the structure to be demolished, the vertical face of the supports of the shed next to the building should be solidly fenced throughout. This recommendation should not prohibit the construction and use of solid-sliding or swinging gates for the movement of workers and materials, as necessary.

Except for necessary supports to carry the roof or deck load, the side of the sidewalk shed opposite to or away from the building to be demolished should be open.

Where the horizontal distance from the inside of the sidewalk to the structure is more than 15 ft (4570 mm), and less than 25 ft (7620 mm), a sidewalk shed or canopy should be permitted to be constructed along the inside edge of the sidewalk, or, if permission has been granted to close the sidewalk, a substantial fence should be constructed along the inside edge of the roadway. Fences for the protection of pedestrians should be constructed at least 8 ft (2440 mm) high. Fences should be constructed of wood or other suitable material and should be built solid for the entire height and length, except that openings necessary for movement of workers and materials should be permitted to be provided with solid-sliding or swinging gates.

Where the horizontal distance from the inside of the sidewalk to the structure is more than 25 ft (7620 mm), a shed, canopy, or fence should be permitted to be built or, in place of such shed, canopy, or fence, a substantial railing should be constructed on the inside of the sidewalk or roadway along the entire length of the demolition site and provided with movable bars for access of workers and movement of materials for the work.

Where workers entrances are required, they should be protected by canopies extending from the face of the building to a point not less than 8 ft (2440 mm) from the building. Such overhead protection should be at least 24 in. (610 mm) wider than the building entrance or opening, and the canopy should be at least as strong as the sidewalk shed previously specified.

Sidewalk shed or fence openings provided for movement of workers and materials should be kept closed at all times, except during the actual passage of workers, materials, and vehicles.

Removal of Materials. No material should be dropped at any point lying outside the exterior walls of the building, except through fully enclosed chutes leading to an exterior container.

Chutes should be provided for removal of material through floor openings, shafts, or interior courts where the vertical drop exceeds 20 ft (6100 mm).

Material chutes at an angle of more than 45 degrees from the horizontal should be enclosed on all sides, except for openings at or above floor level for receiving materials.

Material chutes at an angle of less than 45 degrees from the horizontal should be permitted to be left open on the upper side.

No part of a chute should be at an angle greater than 85 degrees from the horizontal for a length of more than 20 ft (6100 mm), unless substantial stops or baffles are installed to prevent descending materials from attaining dangerous speeds.

Openings in enclosed chutes for receiving materials should be not over 48 in. (1220 mm) high, measured along the wall of the chute. In all stories below the top, such openings should be located and constructed in a manner to prevent material from being deflected out of the opening when passing from above. All openings below the top should be provided with a substantial cover or door, which should be kept closed when the opening is not in use.

Every enclosed chute should be equipped with a substantial gate at or near the discharge end, and a worker should be assigned to control the gate and the positioning and loading of trucks. The designated worker should prevent anyone from passing under or near the discharge end of the chute.

Openings into chutes, or holes in floors through which debris is dumped, should be protected by a substantial guardrail not less than 42 in. (1065 mm) high.

Intermediate floor openings for the passage of material should be enclosed with barricades, or a substantial guardrail should be provided. The guardrail should be not less than 42 in. (1065 mm) high and should be located not less than 6 ft (1830 mm) from the opening. Barricades or guardrails should not be removed until the story immediately above has been demolished down to the floor line and all debris has been cleared from that floor.

Where cutting a hole in a floor for the passage of material makes the floor unsafe, the floor should be shored.

Copyright National Fire Protection Association
Provided by IHS under license with NFPA
No reproduction or networking permitted without license from IHS
Not for Resale

Stairs and Passageways. Except for stairs, passageways, and ladders for the use of workers, access to the building being demolished should be enclosed at all times.

Existing stairs and handrails should be kept in place and in usable condition as long as practicable, and steps and landings should be kept free of debris.

Hand-Wrecking. Hand-wrecking is defined as a demolition procedure wherein workers accomplish the demolition by the use of hand-held tools, such as hammers, pry bars, jackhammers, saws, welding and cutting equipment, wrenches, and similar tools. In a hand-wrecking operation, heavy equipment, such as cranes, winches, tractors, and trucks, should be used solely to lower heavy components safely and to haul debris from the site.

Hand-wrecking procedures should be used under the following conditions:

(1) Where demolishing part of a building, the remainder of which is to continue in service, with or without modification
(2) Where a building to be demolished is in such close proximity to other structures, public thoroughfares, or other occupied areas that other demolition procedures cannot be followed safely
(3) Where the building to be demolished is of such height that other procedures would be impractical or unsafe

Masonry wall sections or other masonry building components should not be permitted to fall on the floors of the building in such masses as to exceed the safe carrying capacity of the floors.

No section of wall, the height of which is more than 22 times its thickness, should be permitted to stand without lateral bracing, unless the wall is in good condition and was originally designed to stand to a greater height without lateral support.

Workers should not be permitted to work on top of a wall when weather conditions constitute a hazard.

Structural members or load-supporting members on any floor should not be cut or removed until all stories above that floor have been demolished and removed.

Before demolishing interior or exterior walls within 10 ft (3050 mm) of an opening in the floor immediately below, such opening should be boarded over, unless all workers leave the floors below and the access to such floors is prevented.

In buildings of skeleton construction, the steel framing should be permitted to be left in place during the demolition of masonry work. When demolition is completed, steel beams, girders, and other structural members should be cleared of loose material as the masonry demolition work progresses downward.

At the completion of each day's work, the walls of the building being demolished should be left in stable condition and in no danger of being overturned.

During the demolition of the exterior walls of a structure originally more than 50 ft (15 m) high, the authority having jurisdiction should be permitted to require the construction of catch platforms along the exterior faces of such walls, where necessary, to prevent injury to the public and the workers below.

The catch platforms should be constructed and maintained not more than three stories below the story from which the exterior walls are being removed. When the demolition has progressed to within three stories of ground level, catch platforms are not required. The design of catch platforms should be as follows:

(1) Catch platforms should consist of outriggers and planks not less than 60 in. (1525 mm) wide, measured in a horizontal direction from the face of the structure, and planks should be laid tight together without openings between them and the wall.
(2) Catch platforms should be permitted to be constructed of material other than wood where the material does not decrease the security against falling material.
(3) Catch platforms should be capable of sustaining a live load of not less than 125 lb/ft^2 (600 N/m^2).
(4) Catch platforms should be inclined so that the outer edge is at least 6 in. (150 mm) higher than the inner edge.
(5) Supports should consist of outriggers of strength to support the planks and falling material, should be secured against turning, and should be spaced not more than 10 ft (3050 mm) apart.
(6) Each outrigger should be supported against the building and in window openings and should be tied to the building, and the following criteria also should be met:
    (a) Planks supported by the outrigger should be not less than 2 in. (51 mm) thick, and the ends should overlap each other for a distance of at least 12 in. (305 mm) over the supports.
    (b) All planks should be secured against displacement.
(7) The outer edge of each catch platform should be provided with a substantial enclosure, constructed at an angle of approximately 45 degrees with the horizontal and having its outer edge not less than 48 in. (1220 mm) from the platform, measured along the slope of the enclosure.
(8) The enclosure should meet the following criteria:
    (a) The enclosure should consist of galvanized wire mesh made of not less than 16 U.S. gauge wire and 1½ in. (38 mm) mesh.
    (b) The enclosure should be secured to supports placed not more than 10 ft (3050 mm) apart.
    (c) There should be no openings between the platform and the enclosure.
    (d) Supports for the enclosure should be not less than 2 in. × 6 in. (51 mm × 150 mm) in section, with the greater dimension at right angles to the enclosures. Materials should not be dumped on catch platforms, nor should such platforms be used for the storage of materials.

Where workers are engaged in removing floors consisting of masonry filling between floor beams or girders, planks not less than 2 in. × 10 in. (51 mm × 255 mm) wide should be provided and used by workers breaking down the masonry. The planks should be placed and fastened to give the workers firm support if the masonry collapses unexpectedly.

Demolition of a floor should not be started until the floor surrounding the work area is cleared of debris and unnecessary material for a distance of 20 ft (6100 mm).

Workers should not be permitted to work in an area directly under a floor being demolished, and access should be prevented.

Walkways not less than 30 in. (760 mm) wide, and formed of planks not less than 2 in. × 10 in. (51 mm × 255 mm), should be provided and should be used by workers wherever necessary to enable them to reach a work location without walking on exposed beams.

Storage of waste material or debris on any floor or roof of the building or structure being demolished should not be permitted to such an extent that the floor load specified in Chapter 35 of this *Code* is exceeded.

Copyright National Fire Protection Association
Provided by IHS under license with NFPA
No reproduction or networking permitted without license from IHS
Not for Resale

Space for storage of waste material or debris should be permitted to be created by removing flooring and floor beams to an elevation of 25 ft (7620 mm) above ground level, provided that such removal does not endanger the stability of the structure.

Dumping material from upper floors into the storage space should be discontinued during periods when workers are in the storage space.

Walls should not be subjected to lateral pressure from stored material or lateral impact from falling material.

The storage space into which material is dumped should be blocked off, except for openings necessary for removal of material, and such openings should be closed at all times when material is not being removed.

Beams should not be cut until precautions have been taken to prevent a loose beam from swinging freely and striking a worker, a piece of equipment, or any part of the structure being demolished.

All structural steel should be lowered from the building by cable and should not be permitted to drop.

Cable and Ball Wrecking. Where demolishing a building by cable and ball, whether applied to a single wall or to an entire building, the following conditions should be met:

(1) Cable and ball wrecking should be permitted in cases where the building is located a distance from a public thoroughfare and the adjoining property that is at least equal to 1½ times the height of the building.
(2) A public thoroughfare should be permitted to be closed and barricaded to prevent entry of pedestrians or vehicles during demolition operations, provided that the separation from adjoining property specified in item (1) is maintained and a permit is secured to close the street, and the following criteria also apply:.
    (a) Where a building to be demolished is too high to meet the recommendations of items (1) and (2), hand-wrecking procedures should be used to reduce the building height to meet these specifications.
    (b) The hand-wrecking operations specified in item (a) should be terminated, and the partly demolished building should be vacated before cable-and-ball wrecking operations are started.

A.15.1.2.2.2 Table 15.1.2.2.2. Use of FEMA 356, *Prestandard and Commentary for the Seismic Rehabilition of Buildings*, requires the selection of a target building performance level at a specified earthquake hazard level. In most parts of the country, BSE-1 is consistent with the ASCE/SEI 7, *Minimum Design Loads for Buildings and Other Structures*, design level earthquake, and BSE-2 is consistent with the maximum considered earthquake (MCE).

A.15.1.2.3.2 Table 15.1.2.3.2. The use of ASCE/SEI 31, *Seismic Evaluation of Existing Buildings*, and FEMA 356, *Prestandard and Commentary for the Seismic Rehabilitation of Buildings*, requires the selection of a target building performance level at a specified earthquake hazard level. In most parts of the country, the earthquake hazard in ASCE/SEI 31 and the BSE-1 are consistent with the ASCE/SEI 7, *Minimum Design Loads for Buildings and Other Structures*, design level earthquake, and BSE-2 is consistent with the maximum considered earthquake (MCE).

A.15.1.2.4.2 Examples of such features include automatic sprinklers, fire alarm systems, standpipes, and portable fire extinguishers. The presence of life safety features, such as sprinklers or fire alarm devices, creates a reasonable expectation by the public that these safety features are functional. When systems are inoperable or taken out of service but the devices remain, they present a false sense of safety. Also, before taking any life safety features out of service, extreme care needs to be exercised to ensure that the feature is not required, was not originally provided as an alternative or equivalency, or is no longer required due to other new requirements in the current *Code*. It is not intended that the entire system or protection feature be removed. Instead, components such as sprinklers, initiating devices, notification appliances, standpipe hose, and exit systems should be removed to reduce the likelihood of relying on inoperable systems or features.

A.15.1.3.1.1 The purpose of the preliminary meeting is for the responsible officials to gain an understanding of the prospective applicant's intentions for the proposed work and to determine, together with the prospective applicant, the specific applicability of this *Code*. Where possible, this meeting should include all relevant parties.

A.15.6.2.1.3 Some building codes have permitted an increase in egress capacity in buildings protected throughout with an approved automatic sprinkler system. The intent of 15.6.2.1.3.3 is to indicate that, during a reconstruction project, the egress capacity might continue to be evaluated using the previously approved method.

A.15.7.2.2.3 The concept of strengthening only the affected portion of a building should be evaluated to ensure that other areas of the building are not also adversely affected.

A.15.7.3.7.3 The evacuation capability of the residents and staff is a function of both the ability of the residents to evacuate and the assistance provided by the staff. It is intended that the evacuation capability be determined by the program restriction of the facility, by evaluation of the potential abilities of occupants, and, once occupied, by the procedure acceptable to the authority having jurisdiction. The evacuation capability is permitted to be determined in accordance with the definitions in NFPA *101*, *Life Safety Code*, the application of NFPA 101A, *Guide on Alternative Approaches to Life Safety*, Chapter 5, or a program of drills (timed).

Where drills are used to determine evacuation capability, it is recommended that the facility conduct and record fire drills six times per year on a bimonthly basis, with a minimum of two drills conducted during the night when residents are sleeping, and that the facility conduct the drills in consultation with the authority having jurisdiction. Records should indicate the time taken to reach a point of safety, date and time of day, location of simulated fire origin, escape paths used, and comments relating to residents who resisted or failed to participate in the drills.

Evacuation capability, in all cases, is based on the time of day or night when evacuation of the facility would be most difficult, such as when residents are sleeping or fewer staff are present.

A.15.9.2.2.2 It might be appropriate to permit conditions that do not meet the requirements for new buildings or structures.

A.15.9.3 Where this *Code* does not include comprehensive information on materials stresses that might be found in existing structures (for example, cast-iron structures and structural clay tile), archaic materials guides and references are permitted to be used to evaluate these materials with the approval of the authority having jurisdiction.

A.15.9.3.2 Based on the definition of structurally unsafe, the "applicable structural requirements of this *Code*" are those related to dead and live loads only. This provision is not intended to trigger other upgrades, such as for wind or seismic loads.

Copyright National Fire Protection Association
Provided by IHS under license with NFPA
No reproduction or networking permitted without license from IHS
Not for Resale

A.15.9.3.3.1 This criterion for substantial damage is not intended to supersede flood-related provisions found in Chapter 39.

A.16.1.2.2 One example of the exception to 16.1.2.2 is an assembly room for the inmates of a detention occupancy not normally subject to simultaneous occupancy.

A.16.1.3 Assembly occupancy requirements should be determined on a room-by-room basis, a floor-by-floor basis, and a total building basis. The requirements for each room should be based on the occupant load of the individual room, and the requirements for each floor should be based on the occupant load of the individual floor, but the requirements for the assembly building overall should be based on the total occupant load. Therefore, it is quite feasible to have several assembly occupancies with occupant loads of 300 or less grouped together in a single building. Such a building would be an assembly occupancy with an occupant load of over 1000.

A.16.1.6 The increase in occupant load above that calculated using occupant load factors from Table 11.3.1.2 is permitted if the provisions of 16.1.6 are followed. The owner or operator has the right to submit plans and to be permitted an increase in occupant load if the plans comply with the *Code*. The authority having jurisdiction is permitted to reject the plan for increase in occupant load if the plan is unrealistic, inaccurate, or otherwise does not properly reflect compliance with other *Code* requirements. It is not the intent of the provisions of 16.1.6 to prohibit an increase in occupant load solely on the basis of exceeding the limits calculated using occupant load factors from Table 11.3.1.2.

To assist in preventing serious overcrowding incidents in sports arenas, stadia, and similar occupancies, spectator standing room should not be permitted between the seating areas and the playing areas, except in horse race and dog track facilities.

Where a capacity or near-capacity audience is anticipated, all seating should be assigned with tickets showing the section, row, and seat number.

Where standing room is permitted, the capacity of the standing area should meet the following criteria:

(1) It should be determined on the basis of 5 ft^2 (0.46 m^2) per person.
(2) It should have its capacity added to the seating capacity in determining egress requirements.
(3) It should be located to the rear of the seating area.
(4) It should be assigned standing-room-only tickets according to the area designated for the purpose.

The number of tickets sold, or otherwise distributed, should not exceed the aggregate number of seats plus the approved standing room numbers.

A.16.2.2.3.1(1) The seating plan and the means of egress should be reviewed each time the seating is substantially rearranged.

A.16.2.3.2 The provisions of 16.2.3.2 should be applied within the audience seating chamber and to the room doors. The capacity of means of egress components encountered after leaving the audience seating chamber, such as concourses, lobbies, exit stair enclosures, and the exit discharge, should be calculated in accordance with Section 11.3.

A.16.2.4 It is not the intent to require four means of egress from each level of an assembly occupancy building having a total occupant load of more than 1000 where, individually, the floors have occupant loads of less than 1000.

A.16.2.5.4.2 This requirement and the associated requirement of 16.2.5.4.3 have the effect of prohibiting festival seating unless it truly is a form of seating, such as lawn seating, where generous spaces are commonly maintained between individuals and small groups so that people can circulate freely at any time. Such lawn seating is characterized by densities of about one person per 15 ft^2(1.4 m^2). Both requirements prohibit uncontrolled crowd situations, such as in front of stages at rock music concerts where the number and density of people is uncontrolled by architectural or management features.

A.16.2.5.4.3 This requirement is intended to facilitate rapid emergency access to individuals who are experiencing a medical emergency, especially in the case of cardiopulmonary difficulties, where there is a need for rapid medical attention from trained personnel. The requirement also addresses the need for security and law enforcement personnel to reach individuals whose behavior is endangering themselves and others.

A.16.2.5.4.4 The catchment area served by an aisle accessway or aisle is the portion of the total space that is naturally served by the aisle accessway or aisle. Hence, the requirement for combining the required capacity where paths converge is, in effect, a restatement of the idea of a catchment area. The establishment of catchment areas should be based on a balanced use of all means of egress, with the number of persons in proportion to egress capacity.

A.16.2.5.5 For purposes of the means of egress requirements of this *Code*, tablet-arm chair seating is not considered seating at tables. Dinner theater–style configurations are required to comply with the aisle accessway provisions applying to seating at tables and the aisle requirements of 16.2.5.6, if the aisles contain steps or are ramped. Generally, if aisles contain steps or are ramped, all of this *Code*'s requirements for aisles, stairs, and ramps are required to be met.

A.16.2.5.5.1 Seats having reclining backs are assumed to be in their most upright position when unoccupied.

A.16.2.5.5.5 The system known as *continental seating* has one pair of egress doors provided for every five rows that is located close to the ends of the rows. In previous editions of NFPA *101, Life Safety Code*, such egress doors were required to provide a clear width of not less than 66 in. (1675 mm) discharging into a foyer, into a lobby, or to the exterior of the building. This continental seating arrangement can result in egress flow times (with nominal flow times of approximately 100 seconds, rather than 200 seconds) that are approximately one-half as long as those resulting where side aisles lead to more remote doors. Such superior egress flow time performance is desirable in some situations; however, special attention should be given either to a comparably good egress capacity for other parts of the egress system or to sufficient space to accommodate queuing outside the seating space.

A.16.2.5.6.4 It is the intent to permit handrails to project not more than 3 in. (75 mm) into the clear width of aisles required by 16.2.5.6.4.

A.16.2.5.6.5 Technical information about the convenience and safety of ramps and stairs having gradients in the region of 1 in 8 clearly suggests that the goal should be ramp slopes that are less steep and combinations of stair risers and treads that are, for example, superior to 4 in. (100 mm) risers and 32 in. (810 mm) treads. This goal should be kept in mind by designers in establishing the gradient of seating areas to be served by aisles.

Copyright National Fire Protection Association
Provided by IHS under license with NFPA
No reproduction or networking permitted without license from IHS
Not for Resale

A.16.2.5.6.6(3) Tread depth is more important to stair safety than is riser height. Therefore, in cases where the seating area gradient is less than 5 in 11, it is recommended that the tread dimension be increased beyond 11 in. (280 mm) rather than reducing the riser height. Where the seating area gradient exceeds 8 in 11, it is recommended that the riser height be increased while maintaining a tread depth of not less than 11 in. (280 mm).

A.16.2.5.6.9 Failure to provide a handrail within a 30 in. (760 mm) horizontal distance of all required portions of the aisle stair width means that the egress capacity calculation is required to be modified as specified by 16.2.3.2(3). This modification might lead to an increase in the aisle width. Although this increase will compensate for reduced egress efficiency, it does not help individuals walking on such portions of stairs to recover from missteps other than by possibly reducing marginally the crowding that might exacerbate the problem of falls.

A.16.2.5.6.10 Certain tread cover materials such as plush carpets, which are often used in theaters, produce an inherently well-marked tread nosing under most lighting conditions. On the other hand, concrete treads have nosings with a sharp edge and, especially under outdoor lighting conditions, are difficult to discriminate. Therefore, concrete treads require an applied marking stripe. The slip resistance of such marking stripes should be similar to the rest of the treads, and no tripping hazard should be created; luminescent, self-luminous, and electroluminescent tread markings have the advantage of being apparent in reduced light or in the absence of light.

A.16.2.5.7 For purposes of the means of egress requirements of this *Code*, seating at counters or at other furnishings is considered to be the same as seating at tables.

A.16.2.5.7.2 Effectively, where the aisle accessway is bounded by movable seating, the 12 in. (305 mm) minimum width might be increased by about 15 in. to 30 in. (380 mm to 760 mm) as seating is pushed in toward tables. Moreover, it is such movement of chairs during normal and emergency egress situations that makes the zero-clearance allowance workable. The allowance also applies to booth seating where people sitting closest to the aisle normally move out ahead of people farthest from the aisle.

A.16.2.5.7.3 See A.16.2.5.8.3.

A.16.2.5.7.4 The minimum width requirement as a function of accessway length is as follows:

(1) 0 in. (0 mm) for the first 6 ft (1830 mm) of length toward the exit
(2) 12 in. (305 mm) for the next 6 ft (1830 mm) — that is, up to 12 ft (3660 mm) of length
(3) 12 in. to 24 in. (305 mm to 610 mm) for lengths from 12 ft to 36 ft (3.7 m to 10.9 m), the maximum length to the closest aisle or egress doorway permitted by 16.2.5.7.5

Any additional width needed for seating is to be added to these widths, as described in 16.2.5.8.3.

A.16.2.5.8.1 See 11.1.7 and A.11.1.7.2 for special circulation safety precautions applicable where small elevation differences occur.

A.16.2.5.8.2 It is important to make facilities accessible to people using wheelchairs. See ICC/ANSI A117.1, *American National Standard for Accessible and Usable Buildings and Facilities,* which provides guidance on appropriate aisle widths.

A.16.2.5.8.3 Figure A.16.2.5.8.3 shows typical measurements involving seating and tables abutting an aisle. For purposes of the means of egress requirements of this *Code*, seating at counters or other furnishings is considered to be the same as seating at tables.

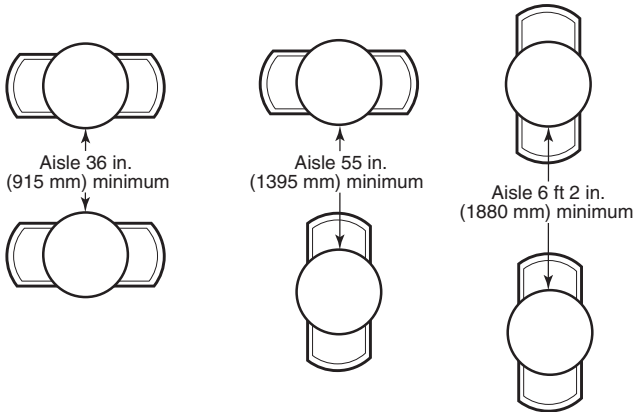

FIGURE A.16.2.5.8.3 Seating at Tables Abutting an Aisle.

A.16.2.11.1.1 This requirement includes the provision of guards and rails at the front of boxes, galleries, and balconies, and at aisle accessways adjacent to vomitories and orchestra pits.

A.16.3.1 Paragraph 16.3.1(1) presumes the balcony or mezzanine complies with the other provisions of the *Code,* such as travel distance to exits in accordance with 16.2.6 and numbers of exits in accordance with 16.2.4. For the purposes of this exception, a balcony with glazing that provides visibility to the main assembly area is considered open.

A.16.3.4.2.3 The intent is to require detectors only in nonsprinklered hazardous areas that are unoccupied. When the building is occupied, the detectors in the unoccupied, unsprinklered hazardous areas will initiate occupant notification. If the building is unoccupied, the fire in the nonsprinklered hazardous area is not a life safety issue, and the detectors, upon activation, are not required to notify anyone. The signal from a detector is permitted to be sent to a control panel in an area that is occupied when the building is occupied, but that is unoccupied when the building is unoccupied, without the need for central station monitoring or the equivalent.

A.16.3.5.1.3(1) The intent of 16.3.5.1.3(1) is to permit a single multipurpose room of less than 12,000 ft^2 (1100 m^2) to have certain small rooms as part of the single room. These rooms could be a kitchen, office, equipment room, and the like. It is also the intent that an addition could be made to an existing building without requiring that the existing building be sprinklered, where both the new and existing buildings have independent means of egress and a fire-rated separation is provided to isolate one building from the other.

A school gymnasium with egress independent of, and separated from, the school would be included in this as would a function hall attached to a church with a similar egress arrangement.

Copyright National Fire Protection Association
Provided by IHS under license with NFPA
No reproduction or networking permitted without license from IHS
Not for Resale

A.16.4.1.1 Life safety evaluations are examples of performance-based approaches to life safety. In this respect, significant guidance in the form and process of life safety evaluations is provided by Chapter 5, keeping in mind the fire safety emphasis in Chapter 5. The general approach to performance criteria, scenarios, evaluation, safety factors, documentation, maintenance, and periodic assessment (including a warrant of fitness) applies to the broader considerations in a life safety evaluation. A life safety evaluation deals not only with fire but also with fire, storm, collapse, crowd behavior, and other related safety considerations for which a checklist is provided in A.16.4.1.3. Chapter 5 provides guidance, based on fire safety requirements, for establishing a documented case showing that products of combustion in all conceivable fire scenarios will not significantly endanger occupants using means of egress in the facility (for example, safety factors such as fire detection, automatic suppression, smoke control, large-volume space, or management procedures). Moreover, means of egress facilities plus facility management capabilities should be adequate to cope with scenarios where certain egress routes are blocked for some reason.

In addition to making realistic assumptions about the capabilities of persons in the facility (for example, an assembled crowd including many disabled persons or persons unfamiliar with the facility), the life safety evaluation should include a factor of safety of not less than 2.0 in all calculations relating to hazard development time and required egress time (the combination of flow time and other time needed to detect and assess an emergency condition, initiate egress, and move along the egress routes). The factor of safety takes into account the possibility that half of the egress routes might not be used (or be usable) in certain situations.

Regarding crowd behavior, the potential hazards created by larger masses of people and greater crowd densities (which can be problematic during ingress, occupancy, and egress) demand that technology be used by designers, managers, and authorities responsible for buildings to compensate for the relaxed egress capacity provisions of Table 16.4.2.3. In very large buildings for assembly use, the hazard of crowd crushes can exceed that of fire or structural failure. Therefore, the building designers, managers, event planners, security personnel, police authorities, and fire authorities, as well as the building construction authorities, should understand the potential problems and solutions, including coordination of their activities. For crowd behavior, this understanding includes factors of space, energy, time, and information, as well as specific crowd management techniques such as metering. Published guidance on these factors and techniques is found in the *SFPE Handbook of Fire Protection Engineering*, Section 3, Chapter 13, pp. 3-263–3-285 (Pauls, J., "Movement of People"), and the publications referenced therein.

Table 16.2.3.2.1 and Table 16.4.2.3 are based on a linear relationship between number of seats and nominal flow time, with not less than 200 seconds (3.3 minutes) for 2000 seats plus 1 second for every additional 50 seats up to 25,000. Beyond 25,000 total seats, the nominal flow time is limited to 660 seconds (11 minutes). Nominal flow time refers to the flow time for the most able group of patrons; some groups less familiar with the premises or less able groups might take longer to pass a point in the egress system.

A.16.4.1.3 Factors to be considered in a life safety evaluation include (1) nature of the events being accommodated, (2) occupant characteristics and behavior, (3) management, (4) emergency management preparedness, and (5) building systems.

Nature of the events being accommodated includes the following:

(1) Ingress, intra-event movement, and egress patterns
(2) Ticketing and seating policies/practices
(3) Event purpose (for example, sports contest, religious meeting)
(4) Emotional qualities (for example, competitiveness) of event
(5) Time of day event is held
(6) Duration of single event
(7) Duration of attendees' occupancy of the building

Occupant characteristics and behavior include the following:

(1) Homogeneity
(2) Cohesiveness
(3) Familiarity with building
(4) Familiarity with similar events
(5) Capability (as influenced by factors such as age, physical abilities)
(6) Socioeconomic factors
(7) Small minority involved with recreational violence
(8) Emotional involvement with the event and other occupants
(9) Use of alcohol or drugs
(10) Food consumption
(11) Washroom utilization

Management includes the following:

(1) Clear, contractual arrangements for facility operation/use as follows:
    (a) Between facility owner and operator
    (b) Between facility operator and event promoter
    (c) Between event promoter and performer
    (d) Between event promoter and attendee
    (e) With police forces
    (f) With private security services
    (g) With ushering services
(2) Experience with the building
(3) Experience with similar events and attendees
(4) Thorough, up-to-date operations manual
(5) Training of personnel
(6) Supervision of personnel
(7) Communications systems and utilization
(8) Ratios of management and other personnel to attendees
(9) Location/distribution of personnel
(10) Central command location
(11) Rapport between personnel and attendees
(12) Personnel supportive of attendee goals
(13) Attendees' respect for personnel due to the following:
    (a) Dress (uniform) standards
    (b) Age and perceived experience
    (c) Personnel behavior, including interaction
    (d) Distinction between crowd management and control
    (e) Management's concern for facility quality (for example, cleanliness)
    (f) Management's concern for entire event experience of attendees (that is, not just during the occupancy of the building)

Emergency management preparedness includes the following:

(1) Complete range of emergencies addressed in operations manual
(2) Power loss
(3) Fire
(4) Severe weather
(5) Earthquake
(6) Crowd incident
(7) Terrorism

Copyright National Fire Protection Association
Provided by IHS under license with NFPA
No reproduction or networking permitted without license from IHS
Not for Resale

(8) Hazardous materials
(9) Transportation accident (for example, road, rail, air)
(10) Communications systems available
(11) Readiness of personnel and emergency forces to respond
(12) Clear information regarding situation and proper behavior provided to attendees

Building systems include the following:

(1) Structural soundness
(2) Normal static loads
(3) Abnormal static loads (for example, crowds, precipitation)
(4) Dynamic loads (for example, crowd sway, impact, explosion, wind, earthquake)
(5) Stability of nonstructural components (for example, lighting)
(6) Stability of movable (for example, telescoping) structures
(7) Fire protection
(8) Fire prevention (for example, maintenance, contents, housekeeping)
(9) Compartmentation
(10) Automatic detection and suppression of fire
(11) Smoke control
(12) Alarm and communications systems
(13) Fire department access routes and response capability
(14) Structural integrity
(15) Weather protection
(16) Wind
(17) Precipitation (attendees rush for shelter or hold up egress of others)
(18) Lightning
(19) Circulation systems
(20) Flowline or network analysis
(21) Waywinding and orientation
(22) Merging of paths (for example, precedence behavior)
(23) Decision/branching points
(24) Route redundancies
(25) Counterflow, crossflow, and queuing situations
(26) Control possibilities, including metering
(27) Flow capacity adequacy
(28) System balance
(29) Movement time performance
(30) Flow times
(31) Travel times
(32) Queuing times
(33) Route quality
(34) Walking surfaces (for example, traction, discontinuities)
(35) Appropriate widths and boundary conditions
(36) Handrails, guardrails, and other rails
(37) Ramp slopes
(38) Step geometries
(39) Perceptual aspects (for example, orientation, signage, marking, lighting, glare, distractions)
(40) Route choices, especially for vertical travel
(41) Resting/waiting areas
(42) Levels of service (overall crowd movement quality)
(43) Services
(44) Washroom provision and distribution
(45) Concessions
(46) First aid and EMS facilities
(47) General attendee services

A scenario-based approach to performance-based fire safety is addressed in Chapter 5. In addition to using such scenarios and, more generally, the attention to performance criteria, evaluation, safety factors, documentation, maintenance, and periodic assessment required when the Chapter 5 option is used, life safety evaluations should consider scenarios based on characteristics important in assembly occupancies. These characteristics include the following:

(1) Whether there is a local or mass awareness of an incident, event, or condition that might provoke egress
(2) Whether the incident, event, or condition stays localized or spreads
(3) Whether or not egress is desired by facility occupants
(4) Whether there is a localized start to any egress or mass start to egress
(5) Whether exits are available or not available

Examples of scenarios and sets of characteristics that might occur in a facility follow.

Scenario 1. The characteristics include mass start, egress desired (by management and attendees), exits not available, and local awareness. Normal egress at the end of an event occurs just as a severe weather condition induces evacuees at the exterior doors to retard or stop their egress. The backup that occurs in the egress system is not known to most evacuees, who continue to press forward (potentially resulting in a crowd crush).

Scenario 2. The characteristics include mass start, egress not desired (by management), exits possibly not available, and mass awareness. An earthquake occurs during an event. The attendees are relatively safe in the seating area. The means of egress outside the seating area are relatively unsafe and vulnerable to aftershock damage. Facility management discourages mass egress until the means of egress can be checked and cleared for use.

Scenario 3. The characteristics include local start, incident stays local, egress desired (by attendees and management), exits available, and mass awareness. A localized civil disturbance (for example, firearms violence) provokes localized egress, which is seen by attendees, generally, who then decide to leave also.

Scenario 4. The characteristics include mass start, egress desired, incident spreads, exits not available, and mass awareness. In an open-air facility unprotected from wind, precipitation, and lightning, sudden severe weather prompts egress to shelter but not from the facility. The means of egress congest and block quickly as people in front stop once they are under shelter while people behind them continue to press forward (potentially resulting in a crowd crush).

These scenarios illustrate some of the broader factors to be taken into account when assessing the capability of both building systems and management features on which reliance is placed in a range of situations, not just fire emergencies. Some scenarios also illustrate the conflicting motivations of management and attendees, based on differing perceptions of danger and differing knowledge of hazards, countermeasures, and capabilities. Mass egress might not be the most appropriate life safety strategy in some scenarios, such as Scenario 2.

Table A.16.4.1.3 summarizes the characteristics in the scenarios and provides a framework for developing other characteristics and scenarios that might be important for a particular facility, hazard, occupant type, event, or management.

A.16.4.2 Outdoor facilities are not accepted as inherently smoke-protected and must meet the requirements of smoke-protected assembly seating in order to utilize the special requirements for means of egress.

A.16.4.2.1(3) The engineering analysis required by 16.4.2.1(3) should be part of the life safety evaluation required by 16.4.1.

Copyright National Fire Protection Association
Provided by IHS under license with NFPA
No reproduction or networking permitted without license from IHS
Not for Resale

Table A.16.4.1.3 Life Safety Evaluation Scenario Characteristics Matrix

Characteristic	Scenario 1	Scenario 2	Scenario 3	Scenario 4
Local awareness	X	—	—	—
Mass awareness	—	X	X	X
Incident localized	—	—	X	—
Incident spreads	—	—	—	X
Management				
Egress desired	X	—	X	—
Egress not desired	—	X	—	—
Occupants				
Egress desired	X	—	X	X
Egress not desired	—	—	—	—
Local start	—	—	X	—
Mass start	X	X	—	X
Exits available	—	—	—	—
Exits not available	X	X	—	X
Other	—	—	—	—

A.16.4.5.10 Prior editions of NFPA *101*, *Life Safety Code*, required stages to be protected by a Class III standpipe system in accordance with NFPA 14, *Standard for the Installation of Standpipe and Hose Systems*. NFPA 14 requires that Class II and Class III standpipes be automatic — not manual — because they are intended to be used by building occupants. Automatic standpipe systems are required to provide not less than 500 gal/min (1893 L/min) at 100 psi (6.9 bar). This requirement often can be met only if a fire pump is installed. Installation of a fire pump presents an unreasonable burden for the system supplying the two hose outlets at the side of the stage. The current wording of 16.4.5.10 offers some relief by permitting the hose outlets to be in accordance with NFPA 13, *Standard for the Installation of Sprinkler Systems*.

A.16.4.7 Where a special amusement building is installed inside another building, such as within an exhibit hall, the special amusement building requirements apply only to the special amusement building.

A.16.4.7.1 The aggregate horizontal projections of a multilevel play structure are indicative of the number of children who might be within the structure and at risk from a fire or similar emergency. The word *aggregate* is used in recognition of the fact that the platforms and tubes that make up the multilevel play structure run above each other at various levels. In calculating the area of the projections, it is important to account for all areas that might be expected to be occupied within, on top, or beneath the components of the structure where the structure is used for its intended function.

A.16.4.7.2 See A.16.4.7.1.

A.16.4.7.7.3 Consideration should be given to the provision of directional exit marking on, or adjacent to, the floor.

A.16.4.10.2(2) Delayed-egress locks on doors from the airport loading walkway into the airport terminal building might compromise life safety due to the limited period of time the airport loading walkway will provide protection for emergency egress. The requirement of 16.4.10.2(2) would not limit the use of access-controlled or delayed-egress hardware from the airport terminal building into the airport loading walkway.

A.17.1.5.2 See 17.3.5.3 for the requirement that portions of an educational occupancy building below the level of exit discharge are to be protected by automatic sprinklers.

A.17.2.5.7 A corridor roofed over and enclosed on its long side and open to the atmosphere at the end is permitted to be considered an exterior corridor, provided that one of the following criteria is met:

(1) Clear story openings for the corridor are provided on both sides of the corridor and above adjacent roofs or buildings, and such clear openings are not less than one-half the height of the corridor walls.
(2) The corridor roof has unobstructed openings to the sky with an area not less than 50 percent of the area of the roof that are equally distributed, and, if louvers are installed, they are fixed open with a clear area based on the actual openings between louver vanes.

A.17.2.11.1 It is highly desirable that all windows be of a type that can be readily opened from inside and that they be large enough and low enough for use by students, teachers, and fire fighters. Windows are permitted to serve as a supplementary means of emergency escape, particularly where ladders can be raised by fire fighters or others.

A.17.3.3.2 The definition of *interior wall finish* is meant to include washroom water closet partitions.

A.17.3.4.2.3.1 Occupied portions of the building should have access to a central point for manual activation of the evacuation signal.

A.17.3.4.2.3.2 Occupied portions of the building should have access to a central point for manual activation of the evacuation signal.

A.17.3.4.3.1.1 Use of the distinctive three-pulse temporal pattern fire alarm evacuation signal that is required by *NFPA 72*, *National Fire Alarm Code*, will help educate students to recognize the need to evacuate when they are in other occupancies.

A.18.2.2.2.6 The purpose of this requirement is to prevent arrangements where a child can be trapped in a closet. It is intended that this provision be broadly interpreted by the authority having jurisdiction to include equipment such as refrigerators and freezers.

A.18.3.2.1(2)(a) It is not the intent to classify a room with a domestic-type clothes washer and a domestic-type clothes dryer as a laundry.

A.19.1.1.1.2 In determining equivalency to life safety requirements for conversions, modernizations, renovations, or unusual design concepts of hospitals or nursing homes, the authority having jurisdiction is permitted to accept evaluations based on NFPA 101A, *Guide on Alternative Approaches to Life Safety*, utilizing the parameters for new health care occupancy construction. The NFPA 101A fire safety evaluation system (FSES) does not measure equivalency to non-life safety features addressed by this *Code*.

A.19.1.1.1.9 The *Code* recognizes that certain functions necessary for the life safety of building occupants, such as the closing of corridor doors, the operation of manual fire alarm devices, and the removal of patients from the room of fire origin, require the intervention of facility staff. It is not the intent of 19.1.1.1.9 to specify the levels or locations of staff necessary to meet this requirement.

Copyright National Fire Protection Association
Provided by IHS under license with NFPA
No reproduction or networking permitted without license from IHS
Not for Resale

A.19.1.1.2 These goals and objectives are accomplished by limiting the development and spread of a fire emergency to the room of fire origin and reducing the need for occupant evacuations, except from the room of fire origin. Such limitation and reduction is accomplished within the context of the physical facilities, the type of activities undertaken, the provisions for the capabilities of staff, and the needs of all occupants through requirements directed at the following:

(1) Prevention of ignition
(2) Detection of fire
(3) Control of fire development
(4) Confinement of the effects of fire
(5) Extinguishment of fire
(6) Provision of refuge or evacuation facilities, or both
(7) Staff reaction

A.19.1.1.4.3 For the purpose of this requirement, a floor that is not divided by a smoke barrier is considered one smoke compartment.

A.19.1.2.2 Doctors' offices and treatment and diagnostic facilities intended solely for outpatient care that are physically separated from facilities for the treatment or care of inpatients, but that are otherwise associated with the management of an institution, might be classified as business occupancies rather than health care occupancies.

A.19.1.2.3 It is the intent that these requirements apply to mobile, transportable, and relocatable structures where such structures are used to provide shared medical services on an extended or a temporary basis. Where properly separated from the health care occupancy and intended to provide services simultaneously for three or fewer health care patients who are litterborne, the level of protection for such structures should be based on the appropriate occupancy classification of other chapters of this *Code*. Mobile, transportable, or relocatable structures that are not separated from a contiguous health care occupancy, or that are intended to provide services simultaneously for four or more health care patients who are litterborne, should be classified and designed as health care occupancies.

A.19.2.2 In planning egress, arrangements should be made to transfer patients from one section of a floor to another section of the same floor that is separated by a fire barrier or smoke barrier in such a manner that patients confined to their beds can be transferred in their beds. Where the building design will allow, the section of the corridor containing an entrance or elevator lobby should be separated from corridors leading from it by fire or smoke barriers. Such arrangement, where the lobby is centrally located, will, in effect, produce a smoke lock, placing a double barrier between the area to which patients might be taken and the area from which they need to be evacuated because of threatening smoke and fire.

A.19.2.2.2.4(2) The intent of the provision is that a person following the natural path of the means of egress not encounter more than one delayed-release device along that path of travel to an exit. Thus, each door from the multiple floors of a building that opens into an enclosed stair is permitted to have its own delayed-release device, but an additional delayed-release device is not permitted at the level of exit discharge on the door that discharges people from the enclosed stair to the outside.

A.19.2.2.2.7 It is desirable to keep doors in exit passageways, stair enclosures, horizontal exits, smoke barriers, and required enclosures around hazardous areas closed at all times to impede the travel of smoke and fire gases. Functionally, however, this involves decreased efficiency and limits observation of patients by the staff of an institution. To accommodate such needs, it is practical to presume that such doors will be kept open, even to the extent of employing wood chocks and other makeshift devices. Doors in exit passageways, horizontal exits, and smoke barriers should, therefore, be equipped with automatic hold-open devices activated by the methods described, regardless of whether the original installation of the doors was predicated on a policy of keeping them closed.

A.19.2.3.3 It is not the intent that the required corridor width be maintained clear and unobstructed at all times. Projections into the required width are permitted by 11.3.2.2. It is not the intent that 19.2.3.3 supersede 11.3.2. Also, it is recognized that wheeled items in use (such as food service carts, housekeeping carts, gurneys, beds, and similar items) and wheeled crash carts not in use (because they need to be immediately accessible during a clinical emergency) are encountered in health care occupancy corridors. The health care occupancy's fire plan and training program should address the relocation of these items during a fire. Note that the phrase *not in use* is not the same as the phrase *in storage*. Storage is not permitted to be open to the corridor, unless it meets 19.3.6.1(1), 19.3.6.1(2), 19.3.6.1(3), 19.3.6.1(4), or 19.3.6.1(5) and is not a hazardous area.

A.19.2.3.3(2) Occupant characteristics are an important factor to be evaluated in setting egress criteria. Egress components in nonpatient use areas, such as administrative office spaces, should be evaluated based on actual use. A clear corridor width of not less than 44 in. (1120 mm) is specified, assuming occupants in nonpatient areas will be mobile and capable of evacuation without assistance.

A.19.2.3.3(5) Exit access should be arranged to avoid any obstructions to the convenient removal of nonambulatory persons carried on stretchers or on mattresses serving as stretchers.

A.19.2.3.4(1) See A.19.2.3.3(2).

A.19.2.3.4(4) See A.19.2.3.3(5).

A.19.2.4.3 An exit is not necessary for each individual smoke compartment if there is access to an exit through other smoke compartments without passing through the smoke compartment of fire origin.

A.19.2.5.3 The term *intervening rooms or spaces* means rooms or spaces serving as a part of the required means of egress from another room.

A.19.2.5.5.1 For the purposes of this paragraph, it is the intent that "habitable rooms" not include individual bathrooms, closets, and similar spaces, as well as briefly occupied work spaces, such as control rooms in radiology and small storage rooms in a pharmacy.

A.19.2.5.6.1.3(A) The term *intervening room* means a room serving as a part of the required means of egress from another room.

A.19.2.5.6.2.1(A) For the purposes of this paragraph, it is the intent that "habitable rooms" not include individual bathrooms, closets, and similar spaces, as well as briefly occupied work spaces, such as control rooms in radiology and small storage rooms in a pharmacy. The term *intervening room* means a room serving as a part of the required means of egress from another room.

A.19.2.5.6.2.2(B) Where only one means of egress is required from the suite, it must be provided by a door opening directly to a corridor complying with 19.3.6.

Copyright National Fire Protection Association
Provided by IHS under license with NFPA
No reproduction or networking permitted without license from IHS
Not for Resale

A.19.2.5.6.2.2(C) Where the second exit access for a sleeping suite is through an adjacent suite, it is the intent that the 100 ft (30 m) travel distance limitation in the suite be applied only to the suite under consideration.

A.19.2.5.6.3.1 The term *intervening rooms* means a room serving as a part of the required means of egress from another room.

A.19.2.5.6.3.2(B) Where only one means of egress is required from the suite, it must be provided by a door opening directly to a corridor complying with 19.3.6.

A.19.2.5.6.3.2(C) Where the second exit access for a nonsleeping suite is through an adjacent suite, it is the intent that the adjacent suite not be considered an intervening room.

A.19.3.2.1 Provisions for the enclosure of rooms used for charging linen chutes and waste chutes, or for rooms into which these chutes empty, are provided in Chapter 8.

A.19.3.2.2 The hazard level of a laboratory is considered severe if quantities of flammable, combustible, or hazardous materials are present that are capable of sustaining a fire of sufficient magnitude to breach a 1-hour fire separation. See the NFPA *Fire Protection Handbook* for guidance.

A.19.3.2.5.2 The requirement of 19.3.2.5.2 is intended to permit small appliances used for reheating, such as microwave ovens, hot plates, toasters, and nourishment centers, to be exempt from the requirements for commercial cooking equipment.

A.19.3.2.6 Extensive research, including fire modeling, has indicated that alcohol-based hand-rub solution dispensers can be safely installed in corridors of health care facilities, provided that certain other precautions are taken. The total quantities of flammable liquids in any area should comply with the provisions of other recognized codes, including NFPA 1, *Uniform Fire Code*, and NFPA 30, *Flammable and Combustible Liquids Code*. In addition, special consideration should be given to the following:

(1) Obstructions created by the installation of such dispensers
(2) Location of such dispensers with regard to adjacent combustible materials and potential sources of ignition, especially where containers are mounted on walls of combustible construction
(3) Requirements for other fire protection features, including complete automatic sprinkler protection, to be installed throughout the compartment
(4) Amount and location of such flammable solution dispensers, both in use and in storage, particularly with respect to potential for leakage or failure of the container

A.19.3.4.2.1 It is not the intent of this *Code* to require single-station or multiple-station smoke alarms that might be required by local codes to be connected to or to initiate the building fire alarm system.

A.19.3.4.3.1.2 It is the intent of 19.3.4.3.1.2 to permit a visible fire alarm signal instead of an audible signal to reduce interference between the fire alarm and medical equipment monitoring alarms.

A.19.3.4.5.3 The requirement for smoke detectors in spaces open to the corridors eliminates the requirement contained in 19.3.6.1 for direct supervision by the facility staff of nursing homes.

A.19.3.5.1 In areas where the replenishment of water supplies is not immediately available from on-site sources, alternate provisions for the water-fill rate requirements of NFPA 13, *Standard for the Installation of Sprinkler Systems*, and NFPA 22, *Standard for Water Tanks for Private Fire Protection*, that are acceptable to the authority having jurisdiction should be provided. Appropriate means for the replenishment of these supplies from other sources, such as fire department tankers, public safety organizations, or other independent contractors, should be incorporated into the overall fire safety plan of the facility.

With the automatic use of sprinkler protection required throughout new health care facilities and quick-response sprinklers required in smoke compartments containing patient sleeping rooms, a fire and its life-threatening by-products can be reduced, thereby allowing the defend-in-place concept to continue. The difficulty in maintaining the proper integrity of life safety elements has been considered, and it has been judged that the probability of a sprinkler system operating as designed is equal to, or greater than, other life safety features.

A.19.3.5.3 The requirements for use of quick-response sprinklers intend that quick-response sprinklers be the predominant type of sprinkler installed in the smoke compartment. It is recognized, however, that quick-response sprinklers might not be approved for installation in all areas, such as those where NFPA 13, *Standard for the Installation of Sprinkler Systems*, requires sprinklers of the intermediate- or high-temperature classification. It is not the intent of the requirements of 19.3.5.3 to prohibit the use of standard sprinklers in limited areas of a smoke compartment where intermediate- or high-temperature sprinklers are required.

Where the installation of quick-response sprinklers is impracticable in patient sleeping room areas, appropriate equivalent protection features acceptable to the authority having jurisdiction should be provided. It is recognized that the use of quick-response sprinklers might be limited in facilities housing certain types of patients or by the installation limitations of quick-response sprinklers.

A.19.3.5.5 For the proper operation of sprinkler systems, cubicle curtains and sprinkler locations need to be coordinated. Improperly designed systems might obstruct the sprinkler spray from reaching the fire or might shield the heat from the sprinkler. Many options are available to the designer including, but not limited to, hanging the cubicle curtains 18 in. (455 mm) below the sprinkler deflector; using a ½ in. (13 mm) diagonal mesh or a 70 percent open weave top panel that extends 18 in. (455 mm) below the sprinkler deflector; or designing the system to have a horizontal and minimum vertical distance that meets the requirements of NFPA 13, *Standard for the Installation of Sprinkler Systems*. The test data that forms the basis of the requirements of NFPA 13 is from fire tests with sprinkler discharge that penetrated a single privacy curtain.

A.19.3.6.1(3) A typical nurses' station would normally contain one or more of the following, with associated furniture and furnishings:

(1) Charting area
(2) Clerical area
(3) Nourishment station
(4) Storage of small amounts of medications, medical equipment and supplies, clerical supplies, and linens
(5) Patient monitoring and communication equipment

A.19.3.6.2 It is the *Code*'s intent that there be no required fire resistance or area limitations for vision panels in corridor walls and doors.

Copyright National Fire Protection Association
Provided by IHS under license with NFPA
No reproduction or networking permitted without license from IHS
Not for Resale

An architectural, exposed, suspended-grid acoustical tile ceiling with penetrating items, such as sprinkler piping and sprinklers, ducted HVAC supply and return-air diffusers, speakers, and recessed lighting fixtures, is capable of limiting the transfer of smoke.

A.19.3.6.3 While it is recognized that closed doors serve to maintain tenable conditions in a corridor and adjacent patient rooms, such doors, which under normal or fire conditions are self-closing, might create a special hazard for the personal safety of a room occupant. Closed doors might present a problem of delay in discovery, confining fire products beyond tenable conditions.

Because it is critical for responding staff members to be able to immediately identify the specific room involved, it is recommended that approved automatic smoke detection that is interconnected with the building fire alarm be considered for rooms having doors equipped with closing devices. Such detection is permitted to be located at any approved point within the room. When activated, the detector is required to provide a warning that indicates the specific room of involvement by activation of a fire alarm annunciator, nurse call system, or any other device acceptable to the authority having jurisdiction.

A.19.3.6.3.1 Gasketing of doors should not be necessary to achieve resistance to the passage of smoke if the door is relatively tight-fitting.

A.19.3.6.3.3 Doors should not be blocked open by furniture, door stops, chocks, tie-backs, drop-down or plunger-type devices, or other devices that necessitate manual unlatching or releasing action to close. Examples of hold-open devices that release when the door is pushed or pulled are friction catches or magnetic catches.

A.19.3.6.3.5 It is not the intent of 19.3.6.3.5 to prohibit the application of push-plates, hardware, or other attachments on corridor doors in health care occupancies.

A.19.3.7 See A.19.2.2.

A.19.3.7.3.2 Where the smoke control system design requires dampers in order that the system function effectively, it is not the intent of 19.3.7.3.2 to permit the damper to be omitted.

Paragraph 19.3.7.3.2 is not intended to prevent the use of plenum returns where ducting is used to return air from a ceiling plenum through smoke barrier walls. Short stubs or jumper ducts are not acceptable. Ducting is required to connect at both sides of the opening and to extend into adjacent spaces away from the wall. The intent is to prohibit open-air transfers at or near the smoke barrier walls.

A.19.3.7.5 Smoke barrier doors are intended to provide access to adjacent zones. The pair of cross-corridor doors is required to be opposite swinging. Access to both zones is required. It is not the intent of 19.3.7.5 to prohibit the application of push-plates, hardware, or other attachments on smoke barrier doors in health care occupancies.

A.19.3.7.7 Smoke barriers might include walls having door openings other than those for cross-corridor doors. There is no restriction in the *Code* regarding which doors or how many doors form part of a smoke barrier. For example, doors from the corridor to individual rooms are permitted to form part of a smoke barrier.

A.19.3.7.8 It is not the intent to require the frame to be a listed assembly.

A.19.3.8 Individual sleeping cubicles within sleeping suites, as permitted by 19.2.5.6, are not required to have an outside window or outside door in each cubicle, provided that not less than one outside window or outside door is provided in the suite or that the requirements of 19.3.8(2) are met.

A.19.4.3.1 For example, the provisions of 15.5.1.3.5 do not require the installation of sprinklers if the modification involves less than 50 percent of the area of the smoke compartment and less than 4500 ft^2 (420 m^2).

A.19.4.3.4 The protection specified in Table 19.3.2.1 is based on the requirement in 19.3.5.1 that automatic sprinklers protect buildings housing new health care facilities.

A.19.5.2.2 For both new and existing buildings, it is the intent to permit the installation and use of fireplace stoves and room heaters utilizing solid fuel as defined in NFPA 211, *Standard for Chimneys, Fireplaces, Vents, and Solid Fuel-Burning Appliances*, provided that all such devices are installed, maintained, and used in accordance with the appropriate provisions of that standard and all manufacturers' specifications. These requirements are not intended to permit freestanding solid fuel–burning appliances, such as freestanding wood-burning stoves.

A.20.1.1.1 The *Code* recognizes that certain functions necessary for the life safety of building occupants, such as the closing of corridor doors, the operation of manual fire alarm devices, and the removal of patients from the room of fire origin, require the intervention of facility staff. It is not the intent of 20.1.1.1.6 to specify the levels or locations of staff necessary to meet this requirement.

A.20.1.2.2 Doctors' offices and treatment and diagnostic facilities intended solely for outpatient care that are physically separated from facilities for the treatment or care of inpatients, but that are otherwise associated with the management of an institution, might be classified as business occupancies rather than health care occupancies.

A.20.3.2.3.2 The requirement of 20.3.2.3.2 is intended to permit small appliances used for reheating, such as microwave ovens, hot plates, toasters, and nourishment centers, to be exempt from the requirements for commercial cooking equipment.

A.20.3.2.4 Extensive research, including fire modeling, has indicated that alcohol-based hand-rub solution dispensers can be safely installed in corridors of health care facilities, provided that certain other precautions are taken. The total quantities of flammable liquids in any area should comply with the provisions of other recognized codes, including NFPA 1, *Uniform Fire Code*, and NFPA 30, *Flammable and Combustible Liquids Code*. In addition, special consideration should be given to the following:

(1) Obstructions created by the installation of such dispensers
(2) Location of such dispensers with regard to adjacent combustible materials and potential sources of ignition, especially where containers are mounted on walls of combustible construction
(3) Requirements for other fire protection features, including complete automatic sprinkler protection, to be installed throughout the compartment
(4) Amount and location of such flammable solution dispensers, both in use and in storage, particularly with respect to potential for leakage or failure of the container

A.20.3.6.1 The provisions of 20.3.6.1 are not intended to prohibit occupant use areas within the corridor.

--`,,```,,,,````-`-`,,`,,`,`,,`---
Copyright National Fire Protection Association
Provided by IHS under license with NFPA
No reproduction or networking permitted without license from IHS
Not for Resale

A.20.3.7.7 Smoke barriers might include walls having door openings other than those for cross-corridor doors. There is no restriction in the *Code* regarding which doors or how many doors form part of a smoke barrier. For example, doors from the corridor to individual rooms are permitted to form part of a smoke barrier.

A.21.1.1.4 It is not the intent to classify as detention and correctional occupancies the areas of health care occupancies where doors are locked against patient egress where needed for the clinical needs of the patients. For example, a dementia treatment center can be adequately protected by the health care occupancy requirements of Chapter 19. *[See 19.1.1.1.5, 19.2.2.2.2, 19.2.2.2.4(1), and 19.2.2.2.5.]*

The one-resident threshold of 21.1.1.4 is not meant to force a residential occupancy where security is imposed on one or more occupants to be reclassified as a detention and correctional occupancy.

A.21.1.1.6 Lockups in which persons are detained with some degree of security imposed on them are common in many occupancies. Examples include the following:

(1) Immigration and naturalization facilities at border crossings
(2) Customs facilities at international airports
(3) Prisoner holding facilities at courthouses
(4) Local police department holding areas
(5) Security offices at sports stadia
(6) Security offices at shopping mall complexes

A.21.1.2 Detention and correctional facilities are a complex of structures, each serving a definite and usually different purpose. In many institutions, all, or almost all, the occupancy-type classifications found in this *Code* are represented. Means of egress and other features are governed by the type of occupancy classification and the hazard of occupancy, unless specific exceptions are made.

All buildings and structures are to be classified using Chapter 21 and Section 6.1 as a guide, subject to the ruling of the authority having jurisdiction where there is a question as to the proper classification of any individual building or structure.

Use condition classification of the institution, as well as individual areas within the complex, is always to be considered by the authority having jurisdiction.

A.21.1.2.2.2 Hardware of a lesser grade than detention grade might not be suitable for the heavy use that these locks are expected to receive.

A.21.1.3.1 Users and occupants of detention and correctional facilities at various times can be expected to include staff, visitors, and residents. The extent and nature of facility utilization will vary according to the type of facility, its function, and its programs. Figure A.21.1.3.1 illustrates the five use conditions.

A.21.1.3.2 Prompt operation is intended to be accomplished in the period of time between detection of fire by either the smoke detector(s) required by 21.3.4.4 or by other means, whichever occurs first, and the advent of intolerable conditions forcing emergency evacuation. Fire tests have indicated that the time available is a function of the volume and height of the space involved and the rate of fire development. In traditional single-story corridor arrangements, the time between detection by smoke detectors and the advent of lethal conditions down to head height can be as short as approximately 3 minutes. In addition, it should be expected that approximately 1 minute will be required to evacuate all the occupants of a threatened smoke compartment once the locks are released. In such a case, a prompt release time would be 2 minutes.

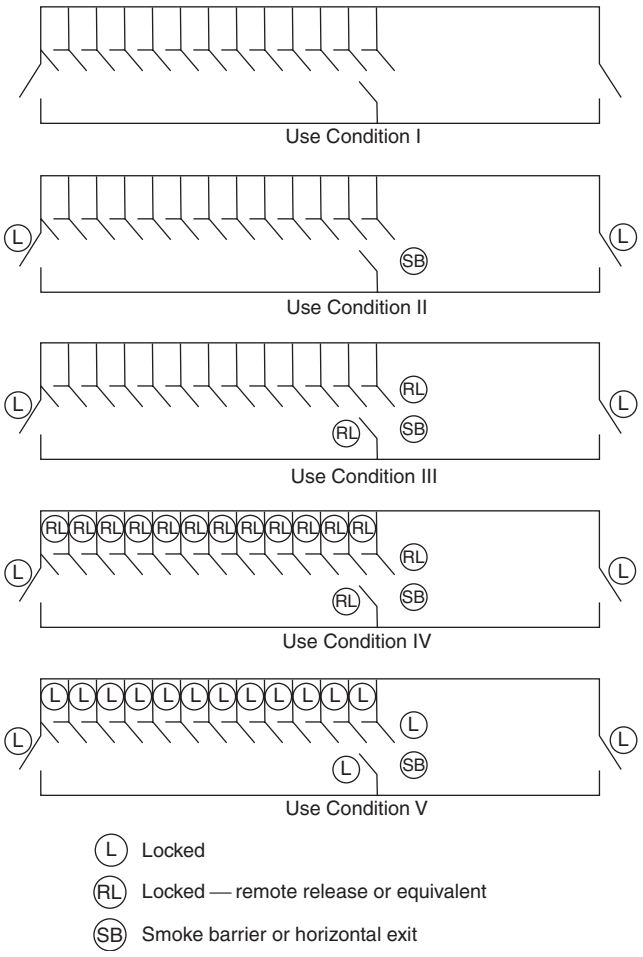

FIGURE A.21.1.3.1 Detention and Correctional Use Conditions.

A.21.1.3.3(2) If the Use Condition I facility conforms to the requirements of residential occupancies under this *Code*, there are no staffing requirements. If the Use Condition I facility conforms to the requirements of Use Condition II facilities as permitted by 21.1.3.3(2), staffing is needed to the same degree required for any other Use Condition II facility.

A.21.2.4.2 An exit is not necessary from each individual fire compartment or smoke compartment if there is access to an exit through other fire compartments or smoke compartments without passing through the fire compartment or smoke compartment of fire origin.

A.21.2.11.4 It might be necessary to provide a certain number of resident sleeping rooms with doors providing a clear width of not less than 32 in. (810 mm) *(see 11.2.1.2)* to comply with the requirements for the physically handicapped. Such sleeping rooms should be located where there is a direct accessible route to the exterior or to an area of safe refuge. *(See 21.3.7.)*

Copyright National Fire Protection Association
Provided by IHS under license with NFPA
No reproduction or networking permitted without license from IHS
Not for Resale

A.21.2.11.7 A remote position is generally a control point where a number of doors can be unlocked simultaneously, either mechanically or electrically. In areas where there are a number of sleeping rooms, it is impractical for attendants to unlock doors individually. Doors in an exit should be unlocked prior to unlocking sleeping room doors. Sight and sound supervision of resident living areas can be by means of camera and communications systems.

The requirements of 21.2.11.7 are not intended to prohibit Use Condition V facilities, nor are they intended to limit Use Condition V facilities to 10 manually released locks.

A.21.3.1(2) For purposes of providing control valves and waterflow devices, multilevel residential housing areas complying with 21.3.1(2) are considered to be single story.

A.21.3.2.1 Furnishings are usually the first items ignited in a detention and correctional environment. The type, quantity, and arrangement of furniture and other combustibles are important factors in determining how fast the fire will develop. Furnishings, including upholstered items and wood items such as wardrobes, desks, and bookshelves, might provide sufficient fuel to result in room flashover, which is the full fire involvement of all combustibles within a room once sufficient heat has been built up within the room.

Combustible loading in any room opening onto a residential housing area should be limited to reduce the potential for room flashover. Rooms in which fuel loads are not controlled, thereby creating a potential for flashover, should be considered hazardous areas. Where fire-rated separation is provided, doors to such rooms, including sleeping rooms, should be self-closing.

It is strongly recommended that padded cells not be used, due to their fire record. However, recognizing that they will be used in some cases, provisions for the protection of padded cells are provided. It is recognized that the ¾-hour fire door will be violated with the "plant on" of the padding, but a ¾-hour fire door should be the base of the assembly.

A.21.3.4.3.1.2 The staff at the constantly attended location should have the capability to promptly initiate the general alarm function and contact the fire department or have direct communication with a control room or other location that can initiate the general alarm function and contact the fire department.

A.21.3.4.4 Examples of contiguous common spaces are galleries and corridors.

A.21.3.4.4.3 An open dormitory is a dormitory that is arranged to allow staff to observe the entire dormitory area at one time.

A.21.3.5.4(1) Where access to portable fire extinguishers is locked, staff should be present on a 24-hour basis and should have keys readily available to unlock access to the extinguishers. Where supervision of sleeping areas is from a 24-hour-attended staff location, portable fire extinguishers are permitted to be provided at the staff location in lieu of the sleeping area.

A.21.3.7.1.2 A door to the outside, by itself, does not meet the intent of 21.3.7.1.2 if emergency operating procedures do not provide for the door to be unlocked when needed. In cases where use of the door is not ensured, a true smoke barrier in accordance with the base requirement of 21.3.7.1 would be needed.

A.21.3.7.3 *Structural fire resistance* is defined as the ability of the assembly to remain in place and maintain structural integrity without consideration of heat transmission. Twelve-gauge steel plate suitably framed and stiffened meets this requirement.

A.21.3.7.4(1) As an example, a smoke barrier is permitted to include fire-rated glazing panels mounted in a security grille arrangement.

A.21.3.8 The requirements in Table 21.3.8.1 for smoke-resistant separations include taking the necessary precautions to restrict the spread of smoke through the air-handling system. However, the intent is not that smoke dampers are required to be provided for each opening. Smoke dampers would be one acceptable method; however, other techniques, such as allowing the fans to continue to run with 100 percent supply and 100 percent exhaust, would be acceptable.

A.21.4.3 Where the fire command center is not within the facility control center, consideration should be given to coordinating activities between the centers during a fire emergency.

A.21.4.4.3 This provision is intended to promote the use of horizontal exits in detention and correctional occupancies. Horizontal exits provide an especially effective egress system for an occupancy in which the occupants, due to security concerns, are not commonly released to the outside. This provision offers a *Code*-specified equivalent alternative to the requirement of 11.2.4.3.4 that horizontal exits are not to be penetrated by ducts in nonsprinklered buildings. The intended continuity of the fire resistance–rated and smoke-resisting barrier is maintained by requiring that duct penetrations of horizontal exits be protected by combination fire damper/smoke leakage–rated dampers that will close upon activation of a smoke detector and a heat-actuated mechanism before the barrier's ability to resist the passage of smoke and fire is compromised.

A.21.4.4.6.2 It is not the intent of this requirement to restrict room face separations, which restrict visibility from the common space into individual sleeping rooms.

A.21.4.4.6.4 The vertical separation between the lowest floor level and the uppermost floor level is not to exceed 13 ft (3960 mm). Figure A.21.4.4.6.4 illustrates how the height is to be determined.

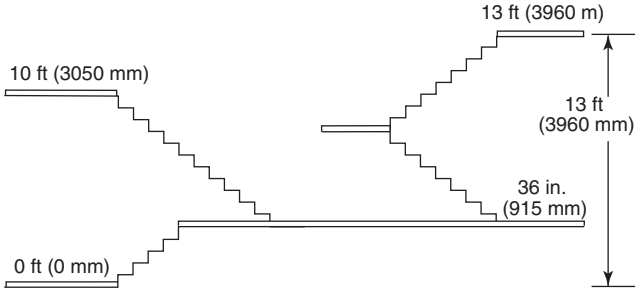

FIGURE A.21.4.4.6.4 Vertical Height Measurement.

A.21.4.4.12 The requirements in Table 21.4.4.12 for smoke-resistant and fire-rated separations include taking the necessary precautions to restrict the spread of smoke through the air-handling system. However, the intent is that smoke dampers are required to be provided for each opening. Smoke dampers would be one acceptable method; however, other techniques, such as allowing the fans to continue to run with 100 percent supply and 100 percent exhaust, would be acceptable.

Copyright National Fire Protection Association
Provided by IHS under license with NFPA
No reproduction or networking permitted without license from IHS
Not for Resale

A.21.4.4.13.2(2) The automatic smoke venting should be in accordance with NFPA 204, *Standard for Smoke and Heat Venting*, for light hazard occupancies.

A.22.1.1.2 The *Code* specifies that wherever there are three or more living units in a building, the building is considered an apartment building and is required to comply with Chapter 25. A townhouse unit is considered to be an apartment building if there are three or more units in the building. If the units are separated by a wall of sufficient fire resistance and structural integrity to be considered as separate buildings, then the provisions of Chapter 22 apply to each townhouse. Condominium is a form of ownership, not occupancy; for example, there are condominium warehouses, condominium apartments, and condominium offices.

The provisions of 22.1.1.2 state that, in one- and two-family dwellings, each dwelling unit can be "occupied by members of a single family with not more than three outsiders . . ." The *Code* does not define the term *family*. The definition of the term *family* is subject to federal, state, and local regulations and might not be restricted to a person or a couple (two people) and their children. The following examples aid in differentiating between a one-family dwelling and a lodging or rooming house:

(1) An individual or a couple (two people) who rent a house from a landlord and then sublease space for up to three individuals should be considered a family renting to a maximum of three outsiders, and the house should be regulated as a one-family dwelling in accordance with Chapter 22.
(2) A house rented from a landlord by an individual or a couple (two people) in which space is subleased to four or more individuals, but not more than 16, should be considered and regulated as a lodging or rooming house in accordance with Chapter 23.
(3) A residential building that is occupied by four or more individuals, but not more than 16, each renting from a landlord, without separate cooking facilities, should be considered and regulated as a lodging or rooming house in accordance with Chapter 23.

A.22.2 The term *means of escape* indicates a way out of a residential unit that does not conform to the strict definition of means of egress but does meet the intent of the definition by providing an alternative way out of a building.

A.22.2.2.4 For use of emergency escape devices, refer to NFPA *101*, *Life Safety Code*, A.7.1.1.

A.22.2.2.4.3 A window with dimensions of 20 in. × 24 in. (510 mm × 610 mm) has an opening of 3.3 ft^2 (0.31 m^2), which is less than the required 5.7 ft^2 (0.53 m^2). Therefore, either the height or width needs to exceed the minimum requirement to provide the required clear area.

A.22.2.4.7 It is the intent of this requirement that security measures, where installed on doors in any means of escape, do not prevent egress.

A.22.3.5 Automatic sprinklers are recognized as an excellent addition to homes to enhance life safety and property protection. Automatic sprinklers can be part of a comprehensive package of fire protection and can assist in creating the overall master plan for a community. Where all of the buildings within an area are sprinklered, including one- and two-family dwellings, the response times and personnel of local fire departments can be established at different levels than if the buildings were not sprinklered, saving considerable tax dollars.

Where whole developments are sprinklered, water mains, hydrant spacing, road widths, and building density can be altered to help alleviate the economic impact of the sprinklers.

A.22.3.5.2 It is not the intent of 22.3.5.2 to override the type of automatic sprinkler system required for the purposes of the height and area increases specified in Chapter 7.

A.23.1.1.1 Bed and breakfast occupancies with more than 3, but not more than 16, occupants are considered lodging or rooming houses.

A.23.2.3.6.1 It is the intent of this requirement that security measures, where installed, do not prevent egress.

A.23.3.2 Exterior stair protection can be accomplished through separation by physical distance, arrangement of the stairs, protection of the openings exposing the stairs, or a combination thereof.

A.23.3.4.3.1 The proprietor is the owner or owner's agent with responsible charge.

A.23.3.6.1 It is not the intent of 23.3.6.1 to override the type of automatic sprinkler system required for the purposes of the height and area increases specified in Chapter 7.

A.23.3.6.2 The decision to permit the use of the criteria from NFPA 13D, *Standard for the Installation of Sprinkler Systems in One- and Two-Family Dwellings and Manufactured Homes*, in these occupancies is based on the following:

(1) Desire to obtain a level of fire suppression and control that is approximately equivalent to that delivered by residential facilities protected by such systems *(see A.1.1 of NFPA 13D)*
(2) Potential fire exposure and challenge to the suppression system in a small lodging or rooming house occupancy are of the same nature and no more severe than those found in residences

A.24.2.2.12.1 The provision of 24.2.2.12.1 permits the entire floor to serve as an area of refuge where it is protected in accordance with 24.3.5. The provision is acceptable because electrically supervised automatic sprinkler systems have built-in signals for monitoring features of the system, such as the opening and closing of water control valves. Such systems also monitor pump power supplies, water tank levels, and conditions that will impair the satisfactory operation of the sprinkler system. Because of these monitoring features, electrically supervised automatic sprinkler systems have a high level of satisfactory performance and response to fire conditions.

A.24.2.3.3 The provision for corridors within individual guest rooms or guest suites does not apply where a suite can be subdivided and rented separately.

A.24.2.7.2 Where open stairways are permitted, they are considered as exit access rather than as exits, and the requirements for travel distance to exits include the travel on such stairs.

A.24.3.4.3 Visible signaling appliances might be governed by the provisions of federal regulations in 28 CFR, Part 36, Appendix A (Americans with Disabilities Act Accessibility Guidelines–ADAAG), Section 4.28, Alarms.

A.24.3.4.4 A number of such rooms and suites might be required to be equipped to accommodate hearing-impaired individuals, based on the total number of rooms in a transient lodging facility. *[See 28 CFR, Part 36, Appendix A (Americans with Disabilities Act Accessibility Guidelines–ADAAG), Sections 9.1.3, 9.1.5, and 9.2.2(8).]*

Copyright National Fire Protection Association
Provided by IHS under license with NFPA
No reproduction or networking permitted without license from IHS
Not for Resale

A.24.3.4.7 The provision for immediate notification of the public fire department is intended to include, but is not limited to, all of the arrangements in Chapter 55. Other arrangements that depend on a clerk or other member of the staff to notify the fire department might also be permitted. In such cases, however, it is essential that a trained staff member and an immediately available means of calling the fire department are continuously available. If a telephone is to be used, it should not be of any type or arrangement that requires a coin or the unlocking of a device to contact the fire department.

A.24.3.4.9 When locating smoke detectors and smoke alarms, caution needs to be exercised with regard to their proximity to bathrooms, cooking facilities, and HVAC outlets to prevent nuisance alarms.

A.24.3.5.1 It is not the intent of 24.3.5.1 to override the type of automatic sprinkler system required for the purposes of the height and area increases specified in Chapter 7.

A.24.5.3.2 "Protected power supply" means a source of electrical energy of sufficient capacity to allow proper operation of the elevator and its associated control and communications systems. The power supply's point of origin, system of distribution, type and size of overcurrent protection, degree of isolation from other portions of the building electrical system, and degree of mechanical protection should be such that it is unlikely that the supply would be disrupted at any but the advanced stages of building fire involvement or by structural collapse.

A protected power supply might consist of, and should provide, not less than the level of reliability associated with an electrical distribution system with service equipment located and installed in accordance with Sections 230.72(B) and 230.82(5) of NFPA 70, *National Electrical Code*. The distribution system is not to have any other connection to the building electrical distribution system. A protected power supply is not required to incorporate two sources of energy or automatic transfer capability from a normal to an emergency source; for example, an alternate set of service conductors.

The number and type of elevators to be connected to a protected power supply should be limited, or the characteristics of the protected power supply should be selected to ensure conformance with Section 230.95 of NFPA 70, without the provision of ground-fault protection for the supply.

An elevator installation supplied by a protected power supply should comply with Article 620 of NFPA 70 and ASME A17.1, *Safety Code for Elevators and Escalators*. The energy absorption means should always be connected on the load side of the disconnecting means. The energy absorption means should not consist of loads likely to become inoperative or disconnected under the conditions assumed to exist when the elevator is under the control of fire department personnel. Examples of such loads include light and power loads external to the elevator equipment room.

A.25.2.2.2.2.1 It is the intent of this requirement that security measures, where installed, should not prevent egress.

A.25.2.2.10.1 The provision of 25.2.2.10.1 permits the entire floor to serve as an area of refuge where it is protected in accordance with 25.3.5. The provision is acceptable because electrically supervised automatic sprinkler systems have built-in signals for monitoring features of the system, such as the opening and closing of water control valves. Such systems also monitor pump power supplies, water tank levels, and conditions that will impair the satisfactory operation of the sprinkler system. Because of these monitoring features, electrically supervised automatic sprinkler systems have a high level of satisfactory performance and response to fire conditions.

A.25.3.4.5.1 Previous editions of NFPA *101*, *Life Safety Code*, permitted the single-station smoke detector required by 25.3.4.5.1 to be omitted from each apartment where a complete automatic smoke detection system was installed throughout the building. With such a system, when one detector is activated, an alarm is sounded throughout the building. Experience with complete smoke detection systems in apartment buildings has shown that numerous nuisance alarms are likely to occur. Where there is a problem with frequent nuisance alarms, occupants ignore the alarm, or the system is either disconnected or otherwise rendered inoperative.

A.25.3.5.1 It is not the intent of 25.3.5.1 to override the type of automatic sprinkler system required for the purposes of the height and area increases specified in Chapter 7.

A.26.1.1.1 Chapter 26 is divided into three sections as follows:

(1) Section 26.1 General Requirements
(2) Section 26.2 Small Facilities (that is, sleeping accommodations for not more than 16 residents)
(3) Section 26.3 Large Facilities (that is, sleeping accommodations for more than 16 residents)

A.26.1.5 The provisions of NFPA *101*, *Life Safety Code*, 8.3.1 address a ½-hour fire resistance rating. The information in A.8.3.1.4 of NFPA *101* addresses common materials used in ½-hour fire resistance–rated barriers.

A.26.2.2.2(3) A window with dimensions of 20 in. × 24 in. (510 mm × 610 mm) has an opening of 3.3 ft^2 (0.31 m^2), which is less than the required 5.7 ft^2 (0.53 m^2). Therefore, either the height or width needs to exceed the minimum requirement to provide the required clear area.

A.26.2.2.5.2 Exterior stair protection can be accomplished through separation by physical distance, arrangement of the stairs, protection of the openings exposing the stairs, or other means acceptable to the authority having jurisdiction.

A.26.2.3.2.1 Spaces containing approved, properly installed and maintained furnaces and heating equipment, furnace rooms, and cooking and laundry facilities should not be classified as hazardous areas solely on the basis of such equipment.

A.26.2.3.5.1 The decision to permit the use of the criteria from NFPA 13D, *Standard for the Installation of Sprinkler Systems in One- and Two-Family Dwellings and Manufactured Homes*, in these occupancies is based on the following:

(1) Desire to obtain a level of fire suppression and control approximately equivalent to that delivered by residential facilities protected by such systems *(see A.1.1 of NFPA 13D)*
(2) Potential fire exposure and challenge to the suppression system in a small board and care facility are of the same nature and are no more severe than those found in residences

Chapter 26 permits the use of NFPA 13D and NFPA 13R, *Standard for the Installation of Sprinkler Systems in Residential Occupancies up to and Including Four Stories in Height*, outside of their scopes. This permission is based on a review of the occupancy and a recognition that the fires in board and care facilities are similar to those of other residential occupancies and that the level of protection is appropriate. The requirements of NFPA 13D and NFPA 13R have been supplemented with requirements for additional water supplies to compensate for the special needs of the board and care occupancy.

Copyright National Fire Protection Association
Provided by IHS under license with NFPA
No reproduction or networking permitted without license from IHS
Not for Resale

A.26.2.3.5.2.2 NFPA 13D, *Standard for the Installation of Sprinkler Systems in One- and Two-Family Dwellings and Manufactured Homes,* contains additional requirements for a piping system serving both sprinkler and domestic needs.

A.26.3.3.3 The provisions in Chapter 10 to allow modifications to interior finish requirements where automatic sprinklers are used are intended to be permitted.

A.26.3.3.4.6 Positive alarm sequence applies only to emergency forces notification. Occupant notification is required to occur immediately upon activation of the detection device or system.

A.26.3.3.5.1 It is intended that this requirement apply to existing small facilities that are converted to large facilities.

A.26.3.3.6 It is not intended to prohibit furniture in corridors and spaces open to corridors, provided that the minimum required width is maintained. Storage is not permitted in corridors or spaces open to corridors.

A.26.3.3.7.10 Where the smoke control system design requires dampers in order that the system function effectively, it is not the intent of 26.3.3.7.10 to permit the damper to be omitted.

The term *fully ducted* means the supply and return-air systems are provided with continuous ducts from all air registers to the air-handling unit.

A.26.3.3.7.15 Smoke partition doors are intended to provide access to adjacent zones. The pair of cross-corridor doors are required to be opposite swinging. Access to both zones is required.

A.26.3.3.7.17 Smoke barriers might include walls having door openings other than cross-corridor doors. There is no restriction in the *Code* regarding which doors or how many doors form part of a smoke barrier. For example, doors from the corridor to individual rooms are permitted to form part of a smoke barrier.

A.26.3.3.7.18 It is not the intent to require the frame to be a listed assembly.

A.26.3.3.8 The scope of NFPA 96, *Standard for Ventilation Control and Fire Protection of Commercial Cooking Operations*, is limited to appliances that produce grease-laden vapors and does not apply to domestic cooking equipment used for food warming or limited cooking.

A.26.3.6.3.2 "Protected power supply" means a source of electrical energy of sufficient capacity to allow proper operation of the elevator and its associated control and communications systems. The power supply's point of origin, system of distribution, type and size of overcurrent protection, degree of isolation from other portions of the building electrical system, and degree of mechanical protection should be such that it is unlikely that the supply would be disrupted at any but the advanced stages of building fire involvement or by structural collapse.

A protected power supply might consist of, and should provide, not less than the level of reliability associated with an electrical distribution system, with service equipment located and installed in accordance with Sections 230.72(B) and 230.82(5) of NFPA 70, *National Electrical Code*. The distribution system is not to have any other connection to the building electrical distribution system. A protected power supply is not required to incorporate two sources of energy or automatic transfer capability from a normal to an emergency source—for example, an alternate set of service conductors.

The number and type of elevators to be connected to a protected power supply should be limited, or the characteristics of the protected power supply should be selected to ensure conformance with Section 230.95 of NFPA 70 without the provision of ground-fault protection for the supply.

An elevator installation supplied by a protected power supply should comply with Article 620 of NFPA 70 and ASME A.17.1, *Safety Code for Elevators and Escalators*. The energy absorption means should always be connected on the load side of the disconnecting means. The energy absorption means should not consist of loads likely to become inoperative or disconnected under the conditions assumed to exist when the elevator is under the control of fire department personnel. Examples of such loads include light and power loads external to the elevator equipment room.

A.27.1.2.2.2(4) Means to prevent spilled fuel from accumulating adjacent to, and from entering, the building can be by curbs, scuppers, or special drainage systems, or by sloping the floor away from the openings, or by use of a floor level in the adjacent story of the building containing the mercantile occupancy that is not less than 4 in. (100 mm) above the floor level of the parking structure.

A.27.2.2.2.2 The words "principal entrance/exit doors" describe doors that the authority having jurisdiction can reasonably expect to be unlocked in order for the facility to do business.

A.27.2.2.7.2 To design egress from a mall building, the following steps should be used:

(1) The mall is not required to be assigned an occupant load, but it is required to be provided with means of egress sized to accommodate the total occupant load of the mall building, based on the gross leasable area, with exits for the mall permitted to be provided by a combination of exterior exit doors and exit passageways.
(2) After completion of the step specified in A.27.2.2.7.2(1), each tenant space is to be judged individually for occupant load and egress capacity.
(3) The step specified in A.27.2.2.7.2(2) normally sends a portion or all (per 27.4.4.5.7) of the tenant space's occupant load into the mall, with any remaining occupants sent through the back of the tenant space into an exit passageway that might serve multiple-tenant spaces and the mall.
(4) The width of the exit passageway is required to be sized for the most restrictive of the following:
    (a) Width of not less than 66 in. (1680 mm) per 27.4.4.5.3
    (b) Portion of the egress capacity from the largest single tenant space being served by the exit passageway
    (c) Portion of the egress capacity from the mall being provided by the exit passageway

The concepts used in A.27.2.2.7.2(1) through (4) include the following:

(1) After proper egress capacity is provided for the mall, each tenant space is then required to independently provide egress capacity for its occupants.
(2) The required exit passageway width for the mall and the required exit passageway width for the tenant space are not required to be added together.
(3) The required exit passageway width for a tenant space is not required to be added to that of other tenant spaces using the same exit passageway.

Copyright National Fire Protection Association
Provided by IHS under license with NFPA
No reproduction or networking permitted without license from IHS
Not for Resale

A.27.2.5.7 In order to eliminate the obstruction to the means of egress of the interior exit access and the exterior exit discharge, it is the intent to provide adequate area for the transit and parking of wheeled carts or buggies used by customers. This area includes corral areas adjacent to exits that are constructed to restrict the movement of wheeled carts or buggies therefrom.

A.27.2.7.2 The basis for the exception to the general rule on complete enclosure of exits up to their point of discharge to the outside of the building is that, with the specified safeguards, reasonable safety is maintained.

A stairway is not considered to discharge through the street floor area if it leads to the street through a fire resistance–rated enclosure (exit passageway) separating it from the main area, even though there are doors between the first floor stairway landing and the main area.

The provisions of 27.2.7.2 should not be confused with those for open stairways as permitted by 27.3.1.

A.27.3.2.1 It is the intent to permit a suspended natural gas–fired unit heater that complies with the requirements of Chapter 49 to be installed and used in a mercantile occupancy without classifying the area in which it is located as hazardous.

A.27.3.2.1.1 These areas can include, but are not limited to, areas used for general storage, boiler or furnace rooms, and maintenance shops that include woodworking and painting areas.

A.27.3.6.1 The intent of 27.3.6.1(2) and (3) is to permit spaces within single-tenant spaces, or within buildings protected throughout by an approved, supervised automatic sprinkler system, to be open to the exit access corridor without separation.

A.27.4.4.2.1 High hazard contents are permitted in anchor buildings in quantities equal to, or less than, the maximum allowable quantities per control area. See Chapter 34 of this *Code*. Note that flammable and combustible liquid and aerosol quantity allowances are found in NFPA 30, *Flammable and Combustible Liquids Code*, and NFPA 30B, *Code for the Manufacture and Storage of Aerosol Products*.

A.27.4.4.2.2 A mall building might enclose one or more uses, such as retail stores, drinking establishments, entertainment and amusement facilities, offices, and other similar uses.

A.27.4.4.3.5.2 Walls providing tenant separations are only required to extend to the underside of the ceiling assembly, regardless of the ceiling's fire-resistive rating. If a ceiling is not provided in either of the tenant spaces, then the wall should extend to the underside of the roof or floor above.

A.27.4.4.5.2.2(3) The minimum requirement of 27.4.4.5.3 for terminating mall exit access in not less than 66 in. (1680 mm) of egress width relates to the minimum requirement for not less than one aisle in Class A mercantile occupancies [30,000 ft^2 (2800 m^2) or greater sales area] to be 5 ft (1525 mm) in width.

A.27.4.4.5.2.2(7) Fire experience in covered mall shopping centers indicates that the most likely place of fire origin is in the tenant space, where the combustible fire load is far greater than in the covered mall proper.

Furthermore, any fires resulting from the comparatively low fire load in the covered mall proper are more likely to be detected and extinguished in their incipient stages. Early detection is likely due to the nature of the covered mall proper as a high-traffic pedestrian way. Such fires produce less smoke development in a greater volume of space than fires in the more confined adjacent tenant space.

Smoke control systems that address fire experience in covered malls are necessary in order to achieve the following:

(1) Ensure the integrity of the covered mall as a pedestrian way by maintaining it reasonably free of the products of combustion for a duration not less than that required to evacuate the building
(2) Confine the products of combustion to the area of origin
(3) Remove the products of combustion with a minimum of migration of such products of combustion from one tenant to another

Systems, or combinations of systems, that can be engineered to address fires in covered malls include the following:

(1) Separate mechanical exhaust or control systems
(2) Mechanical exhaust or control systems in conjunction with heating, ventilating, and air-conditioning systems
(3) Automatically or manually released gravity roof vent devices, such as skylights, relief dampers, or smoke vents
(4) Combinations of items (1), (2), and (3) in this list, or any other engineered system designed to accomplish the purpose of this section

A.27.4.4.5.6 It is not the intent of 27.4.4.5.6 to require that large tenant spaces be considered anchor stores. A tenant space not considered in determining the occupant load of the mall is required to be arranged so that all of its means of egress will be independent of the mall.

A.27.4.4.5.9.2 Rooms opening onto the exit passageway are intended to include building service elevators, elevator machine rooms, electrical rooms, telephone rooms, janitor closets, restrooms, and similar normally unoccupied spaces not requiring hazardous area protection in accordance with Section 8.15.

A.27.4.4.8 Fire experience in mall shopping centers indicates that the most likely place of fire origin is in the tenant space where the combustible fire load is far greater than in the mall proper.

Furthermore, any fires resulting from the comparatively low fire load in the mall proper are more likely to be detected and extinguished in their incipient stages. Early detection is likely due to the nature of the mall proper as a high-traffic pedestrian way. Such fires produce less smoke development in a greater volume of space than fires in the more confined adjacent tenant space.

Smoke control systems that address fire experience in malls are necessary in order to achieve the following:

(1) Ensure the integrity of the mall as a pedestrian way by maintaining it reasonably free of the products of combustion for a duration not less than that required to evacuate the building
(2) Confine the products of combustion to the area of origin
(3) Remove the products of combustion with a minimum of migration of such products of combustion from one tenant to another

Systems, or combinations of systems, that can be engineered to address fires in malls include the following:

(1) Separate mechanical exhaust or control systems
(2) Mechanical exhaust or control systems in conjunction with heating, ventilating, and air-conditioning systems

Copyright National Fire Protection Association
Provided by IHS under license with NFPA
No reproduction or networking permitted without license from IHS
Not for Resale

(3) Automatically or manually released gravity roof vent devices, such as skylights, relief dampers, or smoke vents
(4) Combinations of items (1), (2), and (3) in this list, or any other engineered system designed to accomplish the purpose of this section

A.28.1.1.1(3) In determining equivalency to life safety requirements for conversions, modernizations, renovations, or unusual design concepts of business occupancies, the authority having jurisdiction might permit evaluations based on NFPA 101A, *Guide on Alternative Approaches to Life Safety*, Chapter 7, utilizing the parameters for new construction. The NFPA 101A fire safety evaluation system (FSES) does not measure equivalency to non-life safety features addressed by this *Code*.

A.28.1.2.2.2(4) Means to prevent spilled fuel from accumulating adjacent to, and from entering, the building can be by curbs, scuppers, or special drainage systems, or by sloping the floor away from the openings, or by use of a floor level in the adjacent story of the building containing the mercantile occupancy that is not less than 4 in. (100 mm) above the floor level of the parking structure.

A.28.2.2.2.2 The words "principal entrance/exit doors" describe doors that the authority having jurisdiction can reasonably expect to be unlocked in order for the facility to do business.

A.28.2.3.2 It is not the intent that this provision apply to noncorridor or nonpassageway areas of exit access, such as the spaces between rows of desks created by office layout or low-height partitions.

A.28.3.2.1 It is not the intent of this provision that rooms inside individual tenant spaces that are used to store routine office supplies for that tenant be required to be either separated or sprinklered.

A.28.3.2.2 This provision is not intended to apply to the temporary, small-scale demonstration activities that take place in business occupancies.

A.28.3.6.1 Where exits are available from an open floor area, such as are found in open plan or flexible plan office buildings, corridors are not required to be separated. An example of an open plan or flexible plan office building is a building in which the work spaces and accesses to exits are delineated by the use of tables, desks, bookcases, or counters or by nonpermanent partitions that are less than floor-to-ceiling height. It is the intent of 28.3.6.1 that a single tenant be limited to an area occupied under a single management and work the same hours. The concept is that people under the same employ working the same hours would likely be familiar with their entire tenant space. It is not the intent to apply this provision simply because tenants are owned by the same organization. For example, in a government-owned office building, the offices of different federal agencies would be considered multiple tenants, because an employee normally works for one agency. The agencies might work various hours. Another example of multiple tenancy would be a classroom building of a university, since some classrooms might be in use at times when other classrooms are not being used.

The intent of 28.3.6.1(3) is to permit spaces within buildings protected throughout by an approved, supervised automatic sprinkler system to be open to the exit access corridor without separation.

A.28.4.2 In the design of high-rise buildings, special consideration should also be given to a life safety system including, but not limited to, the following features:

(1) Movement of occupants to safety
(2) Control of fire and smoke
(3) Psychological features
(4) Communications systems
(5) Elevators
(6) Emergency planning
(7) Overall system reliability

A.29.1.1.1 See A.6.1.12.1 for a list of uses that would be considered industrial low occupancies and industrial occupancies.

A.29.1.6 In most cases, the requirements for maximum travel distance to exits will be the determining factor rather than numbers of occupants, as exits provided to satisfy travel distance requirements will be sufficient to provide egress capacity for all occupants, except in cases of unusual arrangement of buildings or high occupant load of a general manufacturing occupancy.

A.29.2.1 Horizontal and vertical utility chases in large industrial buildings used for routing of piping, ducts, and wiring must provide a reasonable level of access for occasional use by maintenance workers but do not warrant compliance with the comprehensive egress requirements of Chapter 11. Minimum access in these cases is governed by electrical and mechanical codes, 29.2.5.3, and the Occupational Safety and Health Administration (OSHA) for facilities in the United States. Utility chases governed by 29.2.1 might involve tunnels or large open spaces located above or below occupied floors; however, they differ from mechanical equipment rooms, boiler rooms, and furnace rooms based on the anticipated frequency of use by maintenance workers. Portions of utility chases where the anticipated presence of maintenance workers is routine are not intended to be encompassed by 29.2.1.

A.29.2.2.5.2 The customary building code requirement for fire doors on both sides of an opening in a fire wall is permitted to be met by having an automatic-sliding fire door on one side and a self-closing fire door swinging out from the other side of the wall. This arrangement qualifies only as a horizontal exit from the side of the sliding door. For further information, see A.11.2.4.3.8.

A.29.2.5.2.1 Ancillary facilities located within industrial occupancies might include administrative office, laboratory, control, and employee service facilities that are incidental to the predominant industrial function and are of such size that separate occupancy classification is not warranted.

A.29.2.5.2.2 Occupants of ancillary facilities located within special-purpose industrial occupancies might be required by administrative controls to remain in the facility when a fire occurs in the predominant industrial area so that they can perform an orderly shutdown of process equipment to control the spread of the fire and minimize damage to important equipment.

A.29.2.6 Table 29.2.6. Smoke venting and heat venting should be in accordance with NFPA 204, *Standard for Smoke and Heat Venting*.

A.29.2.6.1 See NFPA 850, *Recommended Practice for Fire Protection for Electric Generating Plants and High Voltage Direct Current Converter Stations*, for protection recommendations.

Copyright National Fire Protection Association
Provided by IHS under license with NFPA
No reproduction or networking permitted without license from IHS
Not for Resale

A.29.2.9 The authority having jurisdiction should review the facility and designate the stairs, aisles, corridors, ramps, and passageways that should be required to be provided with emergency lighting. In large locker rooms or laboratories using hazardous chemicals, for example, the authority having jurisdiction should determine that emergency lighting is needed in the major aisles leading through those spaces.

A.29.3.5 For the installation of portable fire extinguishers, see NFPA 1, *Uniform Fire Code*.

A.29.3.5.1.3 See NFPA 850, *Recommended Practice for Fire Protection for Electric Generating Plants and High Voltage Direct Current Converter Stations*, for protection recommendations.

A.29.6 For further information on aircraft hangars, see NFPA 409, *Standard on Aircraft Hangars*.

A.30.1.1.1 See A.6.1.13.1 for a list of uses that would be considered as low hazard storage occupancies.

A.30.1.6 There is no occupant load factor specified for storage occupancies. Rather, the actual probable maximum number of persons present needs to be considered in determining the occupant load.

A.30.2.1 Horizontal and vertical utility chases in large industrial buildings used for routing of piping, ducts, and wiring must provide a reasonable level of access for occasional use by maintenance workers but do not warrant compliance with the comprehensive egress requirements of Chapter 11. Minimum access in these cases is governed by electrical and mechanical codes, 29.2.5.3 of this *Code*, and the Occupational Safety and Health Administration (OSHA) for facilities in the United States. Utility chases governed by 30.2.1 might involve tunnels or large open spaces located above or below occupied floors; however, they differ from mechanical equipment rooms, boiler rooms, and furnace rooms based on the anticipated frequency of use by maintenance workers. Portions of utility chases where the anticipated presence of maintenance workers is routine are not intended to be encompassed by 30.2.1.

A.30.2.2.5.2 The customary building code requirement for fire doors on both sides of an opening in a fire wall is permitted to be met by having an automatic-sliding fire door on one side and a self-closing fire door swinging out from the other side of the wall. This arrangement qualifies only as a horizontal exit from the side of the sliding door. For further information, see A.11.2.4.3.8.

A.30.3.5 For the installation of portable fire extinguishers see NFPA 1, *Uniform Fire Code*.

A.30.6 For further information on aircraft hangars, see NFPA 409, *Standard on Aircraft Hangars*.

A.30.7 For further information, see NFPA 61, *Standard for the Prevention of Fires and Dust Explosions in Agricultural and Food Processing Facilities*.

A.30.8.1.1 For further information on garages, including a definition of the term *open garage*, see NFPA 88A, *Standard for Parking Structures*.

A.30.8.3.1.1.5 It is common practice to construct a parking structure that consists of open parking levels aboveground meeting the opening requirements for an open parking structure, but also having enclosed parking levels below grade that would need to comply with the requirements for an enclosed parking structure. It is impractical to have enclosed ramps between the enclosed level(s) and the open level(s) of such a parking structure.

A.31.6.1.1(3) The incidental accessory uses are intended to apply to small office spaces or lounge areas and similar uses that are used by tower employees.

A.32.1.3.3 Where the term *grandstand* is preceded by an adjective denoting a material, it refers to a grandstand the essential members of which, exclusive of seating, are of the material designated.

A.32.1.3.4 A hot tub is distinct from a spa unit formed of plastic, concrete, metal, or other materials.

A.32.1.3.8.3 The spa is intended as a permanent plumbing fixture and is not intended to be moved.

A.32.1.3.9.2 A cable-restrained air-supported structure is one in which the uplift is resisted by cables or webbing that is anchored by various methods to the membrane or that might be an integral part of the membrane. An air-supported structure is not a tensioned-membrane structure.

A.32.1.3.11 A tent might also include a temporary tensioned-membrane structure.

A.32.2.3.2 UL Subject 1588, *Outline of Investigation for Roof and Gutter De-Icing Cable Units*, is used to list de-icing and snow-melting equipment intended to be installed in accordance with NFPA 70, *National Electrical Code*.

A.32.2.4.1 See ASCE *Guide for Tensioned Fabric Structures*.

A.32.2.5.3 UL Subject 1588 is used to list de-icing and snow-melting equipment intended to be installed in accordance with NFPA 70.

A.33.2.1.1 The need for voice communication can be based on a decision regarding staged or partial evacuation versus total evacuation of all floors. The determination of need is a function of occupancy classification and building height.

A.33.2.2 Where an occupancy chapter (Chapters 16 through 30) permits the omission of sprinklers in specific spaces, such as small bathrooms and closets in residential occupancies, the building is still considered to be protected throughout for the purposes of 33.2.2.

A.33.2.4.2 The Type 60, Class I, Level I, standby power required by 33.2.4.2.1 is established in accordance with the provisions of Table 4.1(a) and Table 2.2.3 of NFPA 110, *Standard for Emergency and Standby Power Systems*. The last class identification in Table 4.1(b) is for those emergency power systems that might have a different minimum running time requirement than those shown in the table. Therefore, it is the intent that the standby power required by 33.2.4.2 have an operation of not less than 1 hour running time before refueling is required.

A.33.2.5 It is not the intent of 33.2.5 to require any of the equipment in the list in 33.2.5.4, other than the telephone for fire department use, but only to provide the controls, panels, annunciators, and similar equipment at this location if the equipment is provided or required by another section of the *Code*.

Copyright National Fire Protection Association
Provided by IHS under license with NFPA
No reproduction or networking permitted without license from IHS
Not for Resale

A.34.1.1 This chapter introduces the concepts of control areas and maximum allowable quantities. The purpose is to permit limited amounts of hazardous contents in occupancies having minimum controls without triggering the more restrictive Protection Level 1 through Protection Level 5 building requirements. The allowable quantities in Table 34.1.3.1 are based on demonstrated need and historical safe storage and use of hazardous contents. Section 34.3, however, establishes additional controls for occupancies exceeding the hazardous contents limits prescribed for control areas.

Not all of the hazardous materials categories are placed into the high hazard category, and some of these materials (contents) have been recognized as being of low or ordinary hazards, depending on their nature in a fire. Class IIIB combustible liquids, Class 1 unstable (reactive) materials, Class 1 water-reactive materials, Class 1 oxidizing solids and liquids, and Class IV and Class V organic peroxides are high hazard materials, which, in some cases, do not have a maximum allowable quantity (MAQ) and, therefore, are not required to comply with the requirements for Protection Level 1 through Protection Level 5. Some materials, though classified as high hazard, such as aerosols, are exempt from the requirements of Chapter 34, as they are regulated elsewhere in the *Code*. For additional exceptions, see 34.1.1. Figure A.34.1.1 helps to illustrate the conditions under which the protection level requirements are applicable.

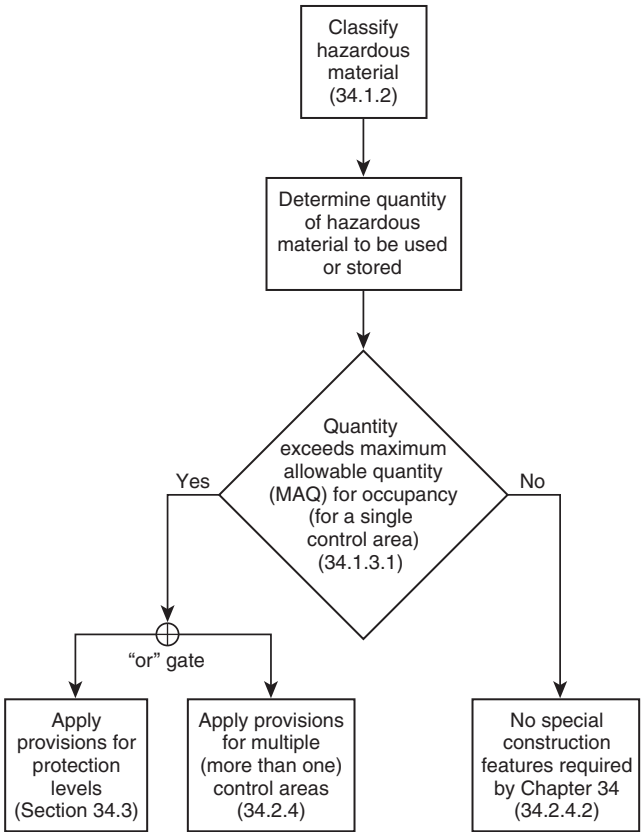

FIGURE A.34.1.1 Application of Chapter 34 Requirements for Hazardous Materials.

A.34.3.2.6 Footnote to Table 34.3.2.6. The following items should be considered in the design:

(1) Deflagration vents designed to release from the exterior walls or roofs of the building should discharge directly to the exterior of the building where an unoccupied space of not less than 50 ft (15 m) in width is provided between the exterior walls of the building and the property line, unless the vents comply with A.34.3.2.6(2).
(2) Deflagration vents designed to remain attached to the building when venting a deflagration should be located so that the discharge opening is not less than 10 ft (3050 mm) vertically from window openings and exit discharge doors in the building and not less than 20 ft (6100 mm) horizontally from exit discharge doors in the building, window openings and exit discharge doors in adjacent buildings on the same property, and property lines.
(3) Deflagration vents should not discharge into the interior of the building.
(4) Additional guidance for deflagration venting can be found in NFPA 68, *Guide for Venting of Deflagrations*.

A.34.3.7.3.8.4 The sprinkler temperature rating should be at least 50°F (27°C) above the temperature of the environment inside the duct.

A.35.1.2 See Section 46.10 for wind, snow, and dead load requirements for glass and glazing.

A.35.1.2.8.8 See also 35.7.3 for rain and ponding requirements and Section 38.6 for roof drainage requirements.

A.35.6.1.2 Table A.35.6.1.2 is a verbatim extract of Table 4-1 of ASCE/SEI 7, *Minimum Design Loads for Buildings and Other Structures*. It is reprinted here with the permission of ASCE.

A.35.6.6 The live loads specified in 35.6.2 include allowance for impact conditions.

A.35.8.2 ASCE/SEI 7, *Minimum Design Loads for Buildings and Other Structures*, Section 7.2, is reprinted in this section with the permission of ASCE/SEI. In addition, Table A.35.8.2 is a verbatim extract of ASCE/SEI 7, Table 7-1, and Figure A.35.8.2 is an extract of ASCE/SEI 7, Figure 7-1. Both have been reprinted here with the permission of ASCE/SEI.

7.2 Ground Snow Loads, p_g. Ground snow loads, p_g, to be used in the determination of design snow loads for roofs shall be as set forth in Figure 7-1 for the contiguous United States and Table 7-1 for Alaska. Site specific case studies shall be made to determine ground snow loads in areas designated CS in Figure 7-1. Ground snow loads for sites at elevations above the limits indicated in Figure 7-1 and for all sites within the CS areas shall be approved by the authority having jurisdiction. Ground snow load determination for such sites shall be based on an extreme value statistical analysis of data available in the vicinity of the site using a value with 2% annual probability of being exceeded (50-year mean recurrence interval).

Snow loads are zero for Hawaii, except in mountainous regions as determined by the authority having jurisdiction.

A.35.9.1.4 The design provisions of Section 35.9 take into consideration the load magnification effect caused by gusts in resonance with along-wind vibrations of flexible buildings and other structures but do not include allowances for across-wind loading, vortex shedding, or instability due to galloping or flutter.

--`,,```,,,,````-`-`,,`,,`,`,,`---

Copyright National Fire Protection Association
Provided by IHS under license with NFPA
No reproduction or networking permitted without license from IHS
Not for Resale

Table A.35.6.1.2 Minimum Uniformly Distributed Live Loads, L_L, and Minimum Concentrated Live Loads

Occupancy or Use	Uniform psf (kN/m^2)	Concentrated lb (kN)
Apartments (see residential)		
Access floor systems		
Office use	50 (2.4)	2000 (8.9)
Computer use	100 (4.79)	2000 (8.9)
Armories and drill rooms	150 (7.18)	
Assembly areas and theaters		
Fixed seats (fastened to floors)	60 (2.87)	
Lobbies	100 (4.79)	
Movable seats	100 (4.79)	
Platforms (assembly)	100 (4.79)	
Stage floors	150 (7.18)	
Balconies (exterior)	100 (4.79)	
On one- and two-family residences only, and not exceeding 100 ft^2 (9.3 m^2)	60 (2.87)	
Bowling alleys, poolrooms, and similar recreational areas	75 (3.59)	
Catwalks for maintenance access	40 (1.92)	300 (1.33)
Corridors		
First floor	100 (4.79)	
Other floors, same as occupancy served, except as indicated		
Dance halls and ballrooms	100 (4.79)	
Decks (patio and roof)		
Same as area served, or for the type of occupancy accommodated		
Dining rooms and restaurants	100 (4.79)	
Dwellings (see residential)		
Elevator machine room grating [on area of 4 in.^{2} (2580 mm^2)]		300 (1.33)
Finish light floor plate construction [on area of 1 in.^{2} (645 mm^2)]		200 (0.89)
Fire escapes	100 (4.79)	
On single-family dwellings only	40 (2.92)	
Fixed Ladders		See Section 4.4.
Garages (passenger vehicles only)	40 (1.92)	Note 1.
Trucks and buses	Note 2	
Grandstands (see stadium and arena bleachers)		
Gymnasiums, main floors, and balconies	100 (4.79)	
Handrails, guardrails, and grab bars	See Section 4.4.	

(continues)

Copyright National Fire Protection Association
Provided by IHS under license with NFPA
No reproduction or networking permitted without license from IHS
Not for Resale

Table A.35.6.1.2 ***Continued***

Occupancy or Use	Uniform psf (kN/m²)	Concentrated lb (kN)
Hospitals		
Operating rooms, laboratories	60 (2.87)	1000 (4.45)
Patient rooms	40 (1.92)	1000 (4.45)
Corridors above first floor	80 (3.83)	1000 (4.45)
Hotels (see residential)		
Libraries		
Reading rooms	60 (2.87)	1000 (4.45)
Stack rooms	150 (7.18) Note 3	1000 (4.45)
Corridors above first floor	80 (3.83)	1000 (4.45)
Manufacturing		
Light	125 (6.00)	2000 (8.90)
Heavy	250 (11.97)	3000 (13.40)
Marquees	75 (3.59)	
Office Buildings		
File and computer rooms shall be designed for heavier loads based on anticipated occupancy		
Lobbies and first floor corridors	100 (4.79)	2000 (8.90)
Offices	50 (2.40)	2000 (8.90)
Corridors above first floor	80 (3.83)	2000 (8.90)
Penal institutions		
Cell blocks	40 (1.92)	
Corridors	100 (4.79)	
Residential		
Dwellings (one- and two-family)		
Uninhabitable attics without storage	10 (0.49)	
Uninhabitable attics with storage	20 (0.96)	
Habitable attics and sleeping areas	30 (1.44)	
All other areas, except stairs and balconies	40 (1.92)	
Hotels and multifamily houses		
Private rooms and corridors serving them	40 (1.92)	
Public rooms and corridors serving them	100 (4.79)	
Reviewing stands, grandstands, and bleachers	100 (4.79) Note 4	
Roofs		
Ordinary flat, pitched, and curved roofs	20 (0.96) Note 8	
Roofs used for promenade purposes	60 (2.87)	
Roofs used for roof gardens or assembly purposes	100 (4.79)	
Roofs used for other special purposes	Note 9	
Awnings and canopies		
Fabric construction supported by a lightweight rigid skeleton structure	5 (0.24) nonreducible	
All other construction	20 (0.96) Note 8	
Primary roof members, exposed to a work floor		
Single panel point of lower chord of roof trusses or any point along primary structural members supporting roofs over manufacturing, storage warehouses, and repair garages		2000 (8.9)
All other occupancies		300 (1.33)
All roof surfaces subject to maintenance workers		300 (1.33)

Copyright National Fire Protection Association
Provided by IHS under license with NFPA
No reproduction or networking permitted without license from IHS Not for Resale

Table A.35.6.1.2 *Continued*

Occupancy or Use	Uniform psf (kN/m^2)	Concentrated lb (kN)
Schools		
Classrooms	40 (1.92)	1000 (4.45)
Corridors above first floor	80 (3.83)	1000 (4.45)
First floor corridors	100 (4.79)	1000 (4.45)
Scuttles, skylight ribs, accessible ceilings		200 (0.89)
Sidewalks, vehicular driveways, and yards subject to trucking	250 (11.97) Note 5	8000 (35.60) Note 6
Stadiums and arenas		
Bleachers	100 (4.79) Note 4	
Fixed seats (fastened to floor)	60 (2.87) Note 4	
Stairs and exitways	100 (4.79)	Note 7
One- and two-family residences only	40 (1.92)	
Storage areas above ceilings	20 (0.96)	
Storage warehouse (shall be designed for heavier loads if required for anticipated storage)		
Light	125 (6.00)	
Heavy	250 (11.97)	
Stores		
Retail		
First floor	100 (4.79)	1000 (4.45)
Upper floors	75 (3.59)	1000 (4.45)
Wholesale floors	125 (6.00)	1000 (4.45)
Vehicle barriers	See Section 4.4.	
Walkways and elevated platforms (other than exitways)	60 (2.87)	
Yards, terraces, pedestrians	100 (4.79)	

Notes:

[1]Floors in garages or portions of buildings used for the storage of motor vehicles shall be designed for uniformly distributed live loads of Table 4-1 [Table A.35.6.1.2] or the following concentrated load: (1) for garages restricted to passenger vehicles accommodating not more than nine passengers, 3000 lb (13.35 kN) acting on an area of 4.5 in. by 4.5 in. (114 mm by 114 mm, footprint of a jack); (2) for mechanical parking structures without slab or deck which are used for storing passenger cars only, 2250 lb (10 kN) per wheel.

[2]Garages accommodating trucks and buses shall be designed in accordance with an approved method which contains provisions for truck and bus loadings.

[3]The loading applies to stack room floors that support non-mobile, double-faced library bookstacks, subject to the following limitations:

a. The nominal bookstack unit height shall not exceed 90 in. (2290 mm)

b. The nominal shelf depth shall not exceed 12 in. (305 mm) for each face; and

c. Parallel rows of double-faced bookstacks shall be separated by aisles not less than 36 in. (914 mm) wide.

[4]In addition to the vertical live loads, the design shall include horizontal swaying forces applied to each row of the seats as follows: 24 pounds per linear foot of seat applied in a direction parallel to each row of seats and 10 pounds per linear foot of seat applied in a direction perpendicular to each row of seats. The parallel and perpendicular horizontal swaying forces need not be applied simultaneously.

[5]Other uniform loads in accordance with an approved method which contains provisions for truck loadings shall also be considered where appropriate.

[6]The concentrated wheel load shall be applied on an area of 4.5 in. by 4.5 in. (114 mm by 114 mm, footprint of jack).

[7]Minimum concentrated load on stair treads [on area of 4 in.^{2} (2580 mm^2)] is 300 lbs (1.33 kN).

[8] Where uniform roof live loads are reduced to less than 20 lb/ft^2 (0.96 kN/m^2) in accordance with Section 4.9.1 and are applied to the design of structural members arranged so as to create continuity, the reduced roof live load shall be applied to adjacent spans or to alternate spans, whichever produces the greatest unfavorable effect.

[9]Roofs used for other special purposes shall be designed for appropriate loads as approved by the authority having jurisdiction.

Source: Reprinted with permission from ASCE/SEI 7.

Copyright National Fire Protection Association
Provided by IHS under license with NFPA
No reproduction or networking permitted without license from IHS
Not for Resale

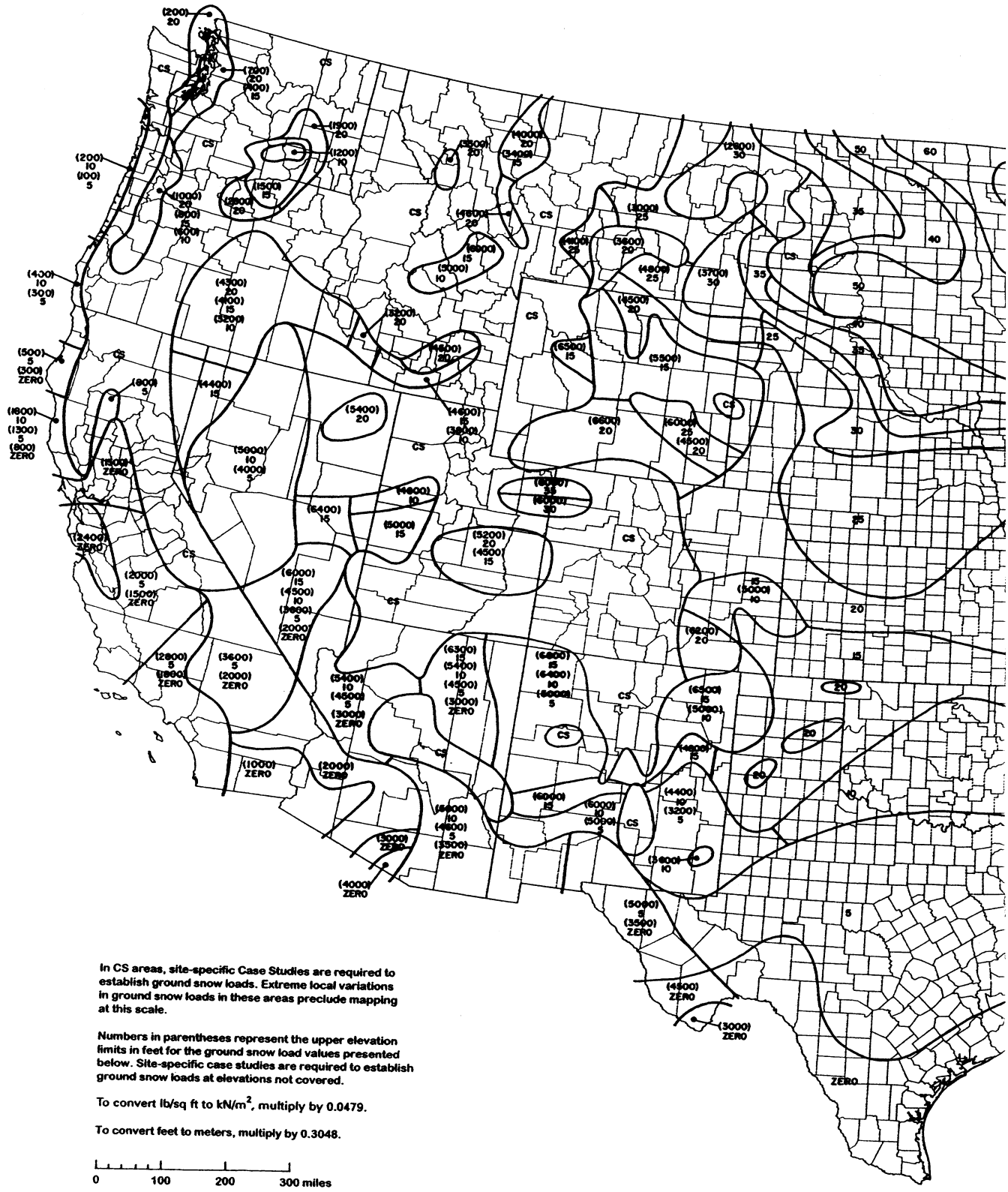

FIGURE A.35.8.2 Ground Snow Loads, p_g, for the United States (lb/ft^2). *(Continues)* **(*Source:* Reprinted with permission from ASCE/SEI 7.)**

Copyright National Fire Protection Association
Provided by IHS under license with NFPA
No reproduction or networking permitted without license from IHS
Not for Resale

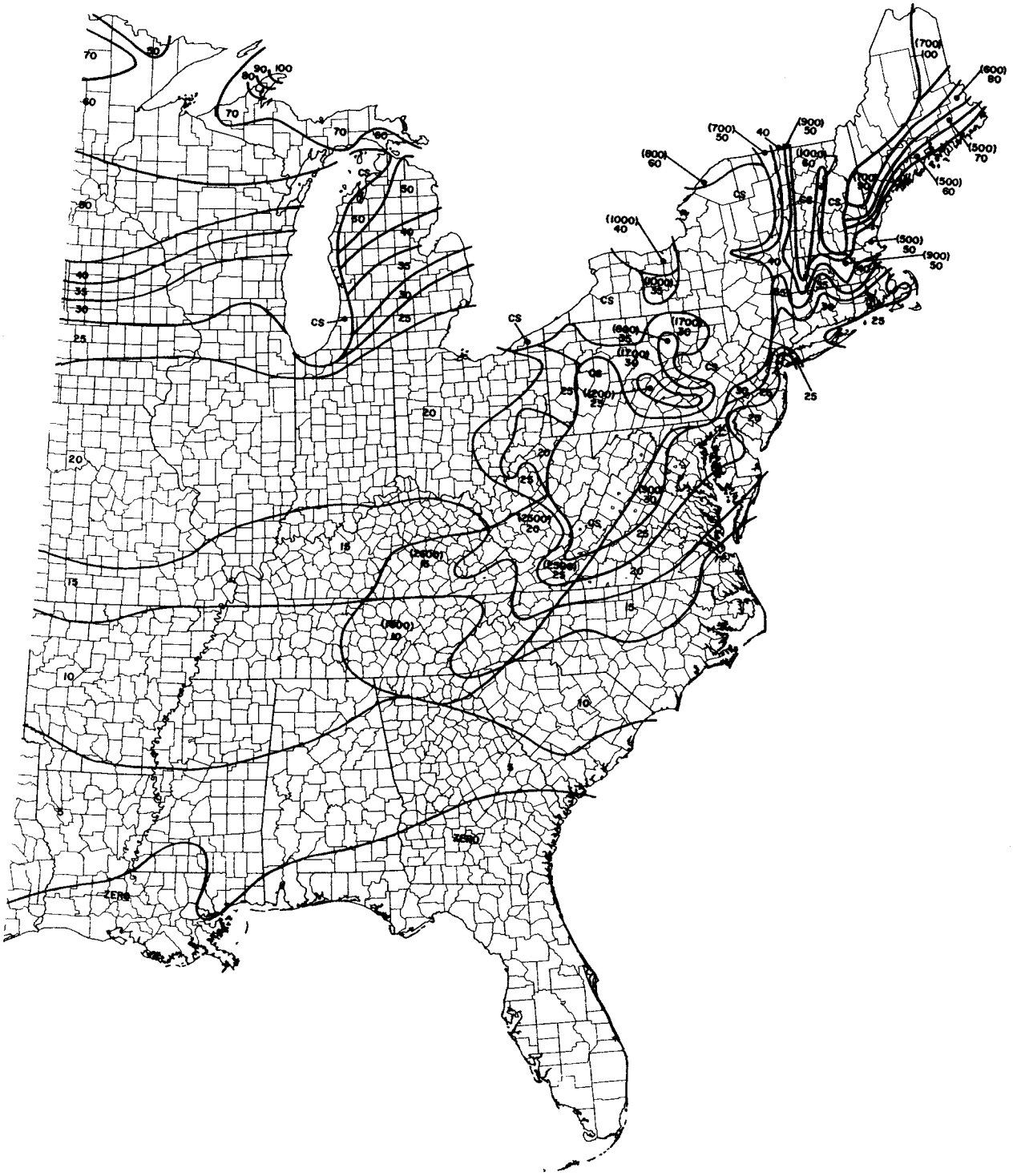

FIGURE A.35.8.2 *Continued*

Copyright National Fire Protection Association
Provided by IHS under license with NFPA
No reproduction or networking permitted without license from IHS
Not for Resale

Table A.35.8.2 Ground Snow Loads, p_g, for Alaskan Locations

	p_g			p_g			p_g	
Location	**lb/ft²**	**kN/m²**	**Location**	**lb/ft²**	**kN/m²**	**Location**	**lb/ft²**	**kN/m²**
Adak	30	1.4	Galena	60	2.9	Petersburg	150	7.2
Anchorage	50	2.4	Gulkana	70	3.4	St. Paul Islands	40	1.9
Angoon	70	3.4	Homer	40	1.9	Seward	50	2.4
Barrow	25	1.2	Juneau	60	2.9	Shemya	25	1.2
Barter	35	1.7	Kenai	70	3.4	Sitka	50	2.4
Bethel	40	1.9	Kodiak	30	1.4	Talkeetna	120	5.8
Big Delta	50	2.4	Kotzebue	60	2.9	Unalakleet	50	2.4
Cold Bay	25	1.2	McGrath	70	3.4	Valdez	160	7.7
Cordova	100	4.8	Nenana	80	3.8	Whittier	300	14.4
Fairbanks	60	2.9	Nome	70	3.4	Wrangell	60	2.9
Fort Yukon	60	2.9	Palmer	50	2.4	Yakutat	150	7.2

Source: Reprinted with permission of ASCE/SEI 7.

A.35.9.2.2 The maps shown in Figure A.35.9.2.2(a), Figure A.35.9.2.2(b), Figure A.35.9.2.2(c), and Figure A.35.9.2.2(d) are extracted directly from ASCE/SEI 7, *Minimum Design Loads for Buildings and Other Structures*, Figure 6-1, Figure 6-1a, Figure 6-1b, and Figure 6-1c. They are reprinted here with the permission of ASCE/SEI.

A.35.9.3 The information that follows has been extracted verbatim from ASCE/SEI 7, *Minimum Design Loads for Buildings and Other Structures,* Section 6.5.6, and is reprinted here with the permission of ASCE. Information regarding the application of the exposures for the determination of wind loads can be found in ASCE/SEI 7. Additional information to assist in the determination of the appropriate exposure is contained in the commentary of ASCE/SEI 7.

6.5.6 Exposure. For each wind direction considered, the upwind exposure category shall be based on ground surface roughness that is determined from natural topography, vegetation, and constructed facilities.

6.5.6.1 Wind Directions and Sectors. For each selected wind direction at which the wind loads are to be evaluated, the exposure of the building or structure shall be determined for the two upwind sectors extending 45 degrees either side of the selected wind direction. The exposures in these two sectors shall be determined in accordance with paragraphs 6.5.6.2 and 6.5.6.3 and the exposure resulting in the highest wind loads shall be used to represent the winds from that direction.

6.5.6.2 Surface Roughness Categories. A ground surface roughness within each 45 degree sector shall be determined for a distance upwind of the site as defined in 6.5.6.3 from the categories defined below, for the purpose of assigning an exposure category as defined in 6.5.6.3.

Surface Roughness B: Urban and sub-urban areas, wooded areas or other terrain with numerous closely spaced obstructions having the size of single family dwellings or larger.

Surface Roughness C: Open terrain with scattered obstructions having heights generally less than 30 ft (9.1 m). This category includes flat open country, grasslands and all water surfaces in hurricane prone regions.

Surface Roughness D: Flat, unobstructed areas and water surfaces outside hurricane prone regions. This category includes smooth mud flats, salt flats and unbroken ice.

6.5.6.3 Exposure Categories.

Exposure B: Exposure B shall apply where the ground surface roughness condition, as defined by Surface Roughness B, prevails in the upwind direction for a distance of at least 2600 ft. (792 m) or twenty times the height of the building, whichever is greater.

Exception: For buildings whose mean roof height is less than or equal to 30 ft, the upwind distance may be reduced to 1500 feet (457 m).

Exposure C: Exposure C shall apply for all cases where exposures B or D do not apply.

Exposure D: Exposure D shall apply where the ground surface roughness, as defined by Surface Roughness D, prevails in the upwind direction for a distance of at least 5000 ft. (1524 m) or 20 times the building height, whichever is greater. Exposure D shall extend into downwind areas of Surface Roughness B or C for a distance of 600 feet (200 m) or 20 times the height of the building, whichever is greater.

For a site located in the transition zone between exposure categories, the category resulting in the largest wind forces shall be used. Exception: An intermediate exposure between the above categories is permitted in a transition zone provided that it is determined by a rational analysis method defined in the recognized literature.

A.35.9.4.2 ASCE/SEI 7, *Minimum Design Loads for Buildings and Other Structures*, Section 6.5.5, is reprinted in this section with the permission of ASCE/SEI. In addition, Table A.35.9.4.2 is a verbatim extract of ASCE/SEI 7, Table 6-1, and is reprinted here with the permission of ASCE/SEI.

6.5.5 Importance Factor. An importance factor, *I,* for the building or other structure shall be determined from Table 6-1 based on building and structure categories listed in Table 1-1.

A.35.10.2 ASCE/SEI 7, *Minimum Design Loads for Buildings and Other Structures*, 11.5.1 is reprinted in this section with the permission of ASCE. In addition, Table A.35.10.2 is a verbatim extract of ASCE/SEI 7, Table 11.5-1, and is reprinted here with the permission of ASCE.

11.5 Importance Factor and Occupancy Category.

11.5.1 Importance Factor. An importance factor, I, shall be assigned to each structure in accordance with Table 11.5-1 based on the Occupancy Category from Table 1-1.

Copyright National Fire Protection Association
Provided by IHS under license with NFPA
No reproduction or networking permitted without license from IHS
Not for Resale

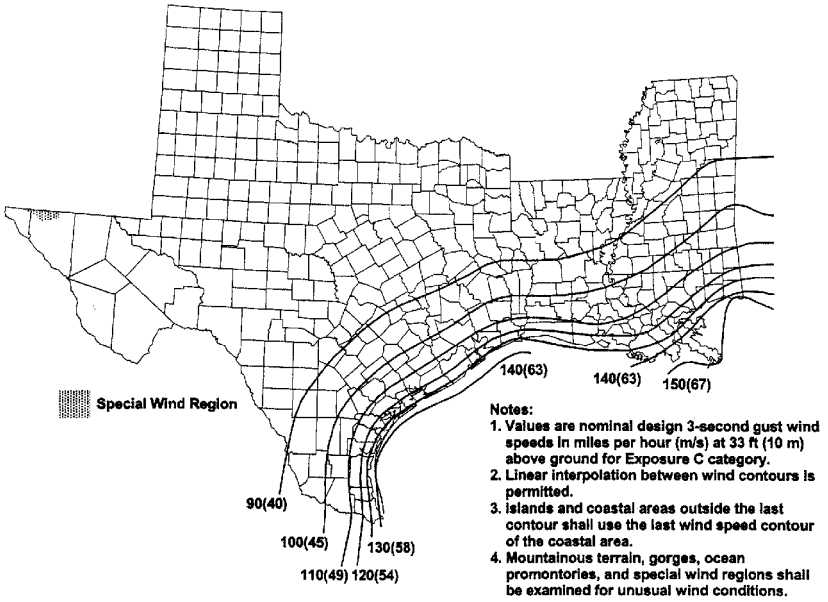

FIGURE A.35.9.2.2(a) Basic Wind Speed—Western Gulf of Mexico Hurricane Coastline. (*Source:* Reprinted with permission from ASCE/SEI 7.)

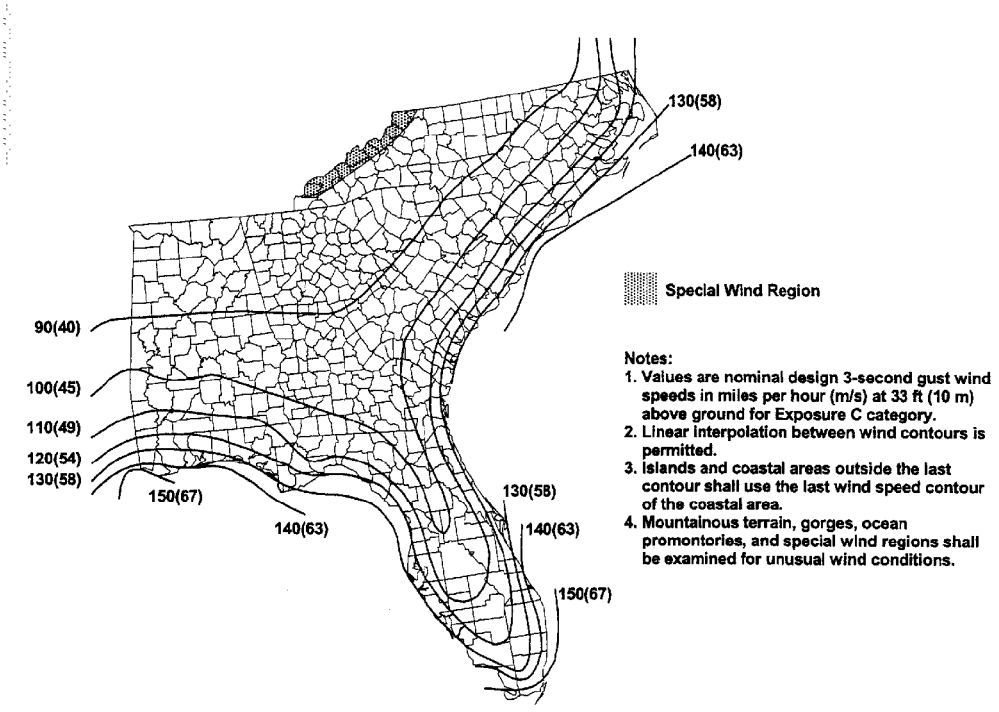

FIGURE A.35.9.2.2(b) Basic Wind Speed—Eastern Gulf of Mexico Southeastern U.S. Hurricane Coastline. (*Source:* Reprinted with permission from ASCE/SEI 7.)

Copyright National Fire Protection Association
Provided by IHS under license with NFPA
No reproduction or networking permitted without license from IHS
Not for Resale

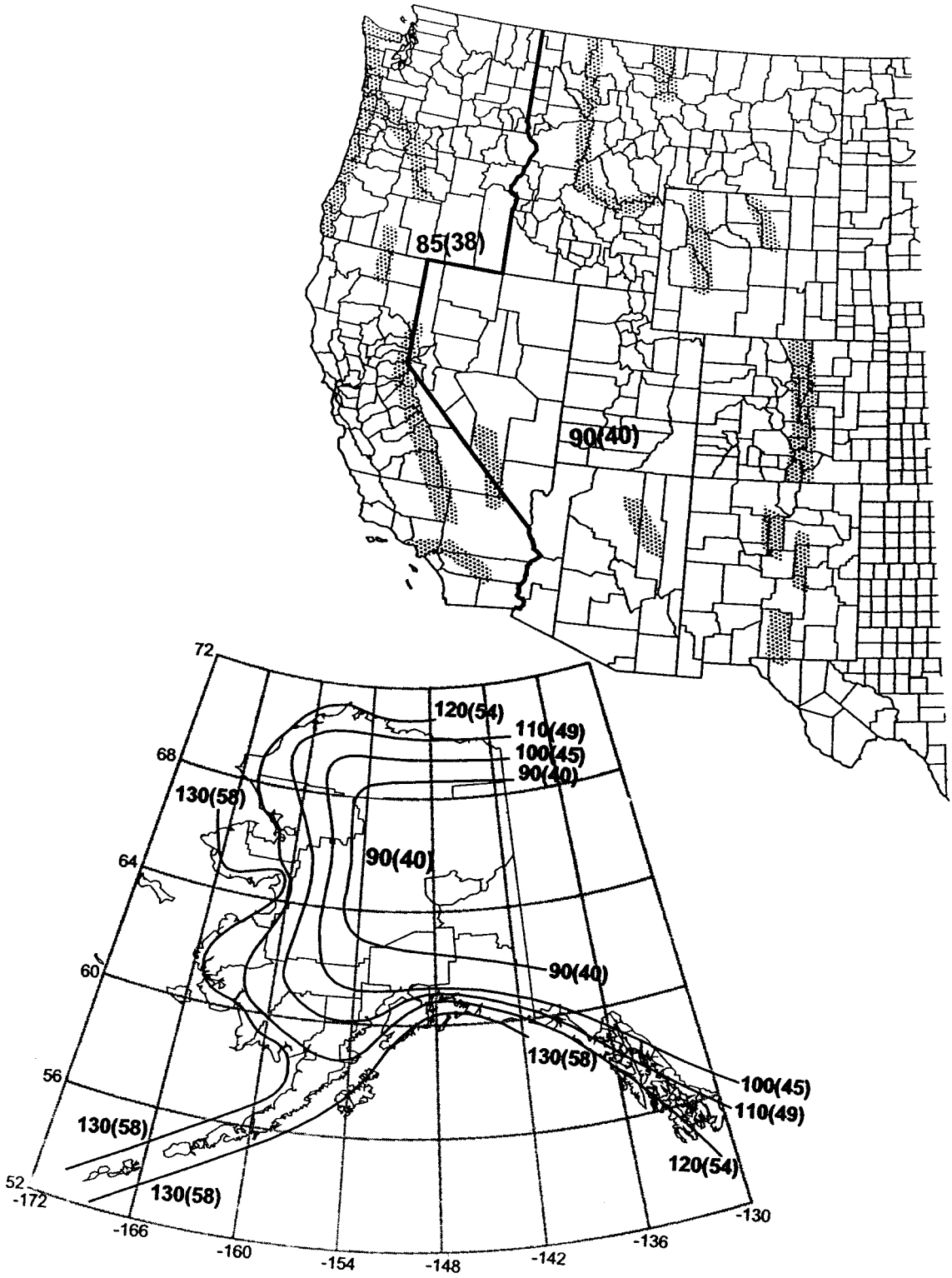

FIGURE A.35.9.2.2(c) Basic Wind Speed. (*Source:* Reprinted with permission from ASCE/SEI 7.)

Copyright National Fire Protection Association
Provided by IHS under license with NFPA
No reproduction or networking permitted without license from IHS
Not for Resale

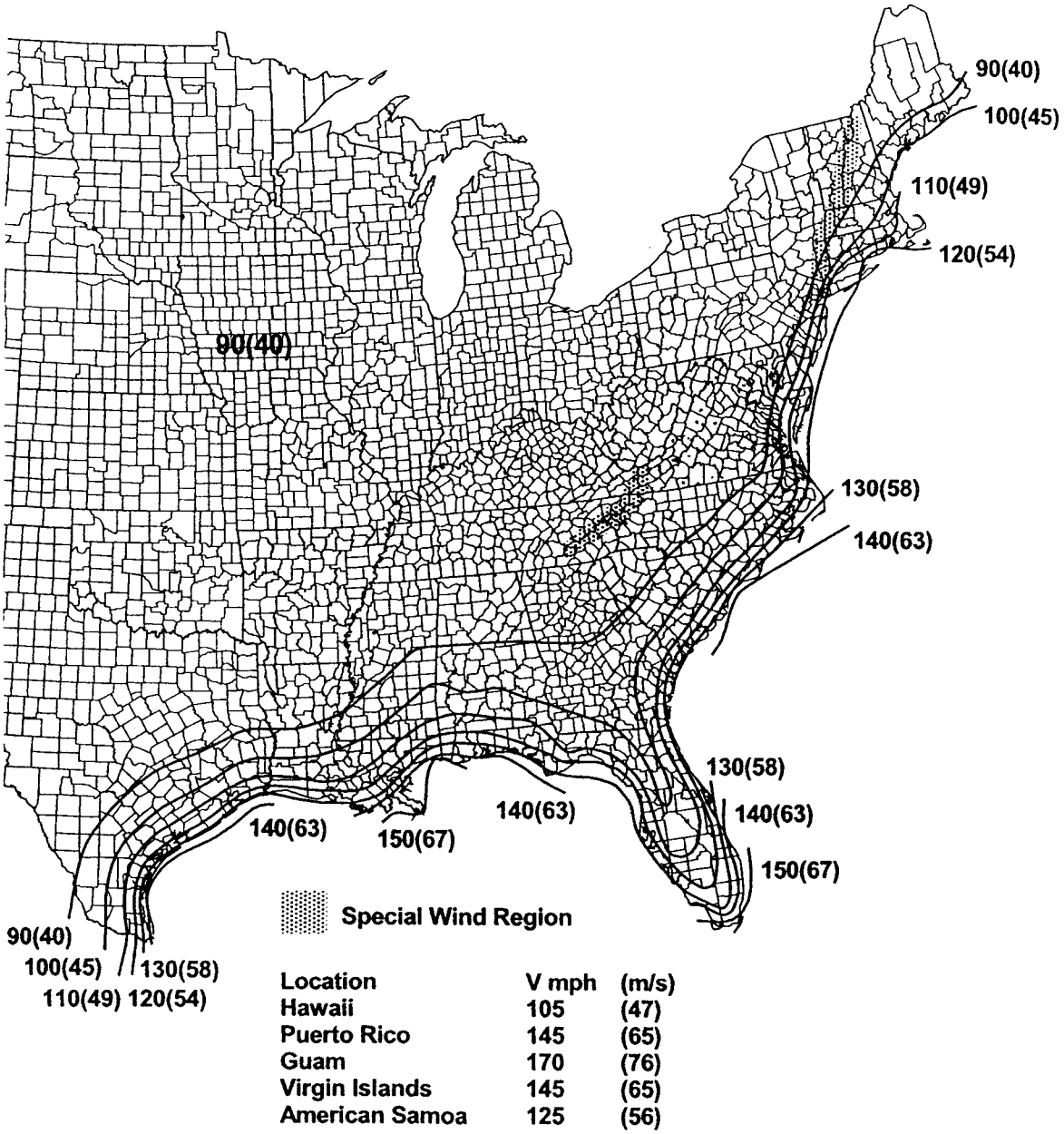

Location	V mph	(m/s)
Hawaii	105	(47)
Puerto Rico	145	(65)
Guam	170	(76)
Virgin Islands	145	(65)
American Samoa	125	(56)

Notes:

1. Values are nominal design 3-second gust wind speeds in miles per hour (m/s) at 33 ft (10 m) above ground for Exposure C category.
2. Linear interpolation between wind contours is permitted.
3. Islands and coastal areas outside the last contour shall use the last wind speed contour of the coastal area.
4. Mountainous terrain, gorges, ocean promontories, and special wind regions shall be examined for unusual wind conditions.

FIGURE A.35.9.2.2(c) *Continued*

Copyright National Fire Protection Association
Provided by IHS under license with NFPA
No reproduction or networking permitted without license from IHS
Not for Resale

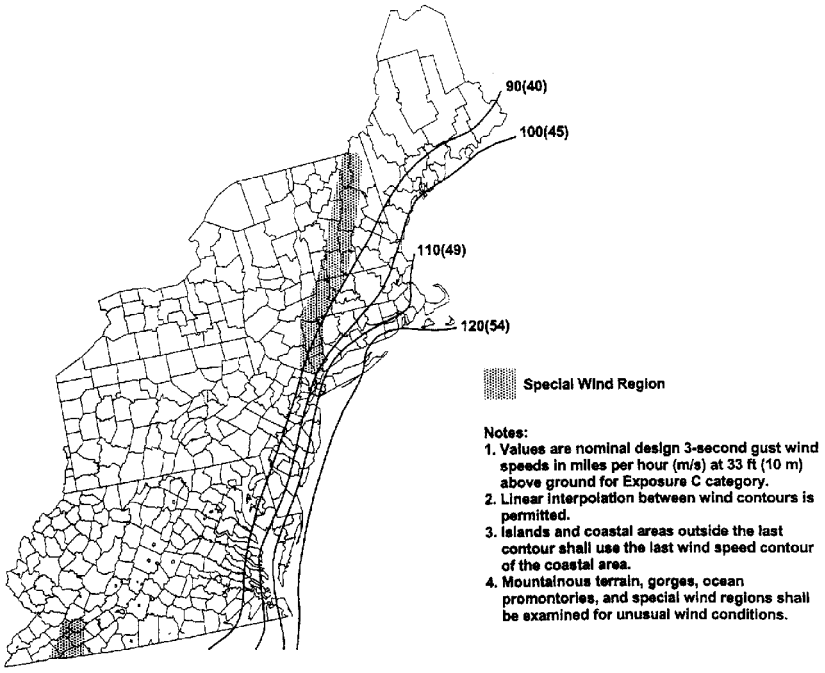

FIGURE A.35.9.2.2(d) Basic Wind Speed—Mid- and Northern Atlantic Hurricane Coastline. (*Source:* Reprinted with permission from ASCE/SEI 7.)

Table A.35.9.4.2 Importance Factor, *I* (Wind Loads)

Category	Non-Hurricane-Prone Regions and Hurricane-Prone Regions with V = 85–100 mph and Alaska	Hurricane-Prone Regions with V > 100 mph
I	0.87	0.77
II	1.00	1.00
III	1.15	1.15
IV	1.15	1.15

Note: The building and structure classification categories are listed in Table 1-1.
Source: Reprinted with permission from ASCE/SEI 7.

Table A.35.10.2 ASCE/SEI 7 Occupancy Importance Factors

Occupancy Category	I
I or II	1.0
III	1.25
IV	1.5

Source: Reprinted with permission from ASCE/SEI 7.

A.35.12 The requirements described in Section 35.12 and included in Chapter 39 represent the basic performance requirements of the National Flood Insurance Program (NFIP). More detailed guidance for translating these requirements into practice can be found in a series of reports and technical bulletins published by the Federal Emergency Management Agency (available on FEMA's web site at www.FEMA.gov). For example, guidance on flood damage–resistant materials can be found in FEMA Technical Bulletin 2-93, *Flood-Resistant Materials Requirements for Buildings Located in Special Flood Hazard Areas*, and in FEMA Technical Bulletin 8-96, *Corrosion Protection for Metal Connectors in Coastal Areas*. Other technical bulletins cover topics on flood openings, breakaway walls, free-of-obstruction requirements, floodproofing, and elevator installation in flood-prone areas.

A.36.7 Detailed design and construction information is available in the AF&PA Technical Report No. 7, *Permanent Wood Foundation System*, and in the Southern Pine Council, *Permanent Wood Foundations: Design and Construction Guide*.

A.37.3 Section 37.3 is not intended to apply to weather resistance for soffits.

A.38.2.2 For buildings located in a wildland/urban interface, additional recommendations for fire classifications of roof coverings can be found in NFPA 1144, *Standard for Protection of Life and Property from Wildfire*.

A.38.3.2 In the case of interior fires, the entire assembly comprised of the metal deck, vapor retarder, adhesives, insulation, and roof covering should be considered where noncombustible or limited-combustible construction is needed. A rapidly spreading under-the-deck fire is possible in such an assembly. Fire experience has demonstrated that the nature and quantity of combustible adhesives, the vapor retarder, the insulation, the roof covering, or a combination thereof above a metal roof deck can contribute significantly to the development of an interior fire. The heat from the fire is readily transmitted to the combustibles directly above the metal deck, where destructive distillation liberates combustible gases. These hot gases build up pressure and,

Copyright National Fire Protection Association
Provided by IHS under license with NFPA
No reproduction or networking permitted without license from IHS
Not for Resale

since they are unable to immediately vent to atmosphere because of the watertight roof covering, they are forced downward through the joints in the metal deck, where they are ignited.

If these gases are liberated in sufficient quantity, they could progressively vaporize the surrounding insulation, vapor retarder, and adhesive in a cyclic manner. Therefore, the fire beneath the roof can propagate rapidly and independently of the fire in the contents of the building and in the absence of a continuity of combustibles within the building occupancy. Flaming molten materials could drip through the roof deck joints, fall down on combustible contents, and could ignite them.

The Factory Mutual Research Corporation (now FM Global) and Underwriters Laboratories Inc. conducted comprehensive large-scale fire tests to determine the fire characteristics of insulated metal deck roof constructions. The tests were conducted in a 20 ft × 100 ft (6.1 m × 30.5 m) fire test building with a severe fire source at one end simulating the first 30 minutes of the standard time–temperature fire exposure in accordance with NFPA 251, *Standard Methods of Tests of Fire Resistance of Building Construction and Materials* (ASTM E 119, *Standard Test Methods for Fire Tests of Building Construction and Materials*). The opposite end of the structure had a 20 ft (6100 mm) wide opening with a 30 in. (760 mm) deep draft curtain projecting downward from the roof deck. Fire propagation beneath the roof deck was demonstrated, and droplets of adhesive ahead of the fire source were evident. Continued studies established that a roof assembly consisting of a metal deck, a 1 in. (25.4 mm) thick vegetable fiberboard mechanically fastened to the deck, and a built-up roof covering would not propagate a rapidly spreading fire. The performance of this assembly established the criteria for judging other assemblies. Views of the test building are shown in Figure A.38.3.2(a), Figure A.38.3.2(b), and Figure A.38.3.2(c)

Small-scale tests for the classification of roof decks have been developed by both FM Global and Underwriters Laboratories Inc., based on performance in the large building tests of acceptable constructions.

For the FM Global classification, assemblies are placed in the construction materials calorimeter, which yields results in terms of rate of heat release. Those assemblies that release heat at a sufficiently low rate are designated as being in Class 1, or of limited combustibility. Metal roof deck assemblies that fail to meet the fire requirements are designated as being in Class 2, or combustible. Details of the test setup and pass/fail criteria are contained in FM 4450, *Approval Standard for Class 1 Insulated Steel Deck Roofs*, and FM 4470, *Approval Standard for Class 1 Roof Covers*.

For Underwriters Laboratories Inc. classification, where a basic roof deck design has demonstrated its performance in the 100 ft (30.5 m) building test, variations of that design can be tested in the Steiner tunnel furnace (ASTM E 84, *Standard Test Method for Surface Burning Characteristics of Building Materials*) and compared to the performance of the appropriate acceptable roof assembly. If equivalent, the assembly is listed and given a construction number. Equivalency is judged on the basis of flame spread and extent of damage. Details of the test setup and pass/fail criteria are contained in UL 1256, *Standard for Safety for Fire Test of Roof Deck Constructions*.

A.38.6.1 Appendix D of the UPC, *Uniform Plumbing Code*, lists rainfall rates for anywhere between 3 and 10 cities within a given state. For areas not covered by Appendix D, the 100-year MRI, 60-minute duration rainfall rates from the map in the U.S. Weather Bureau Technical Paper No. 40, 1961, can be used to supplement the UPC data.



FIGURE A.38.3.2(a) Overall View of 20 ft × 100 ft (6.1 m × 30.5 m) Fire Test Building from Exhaust End.

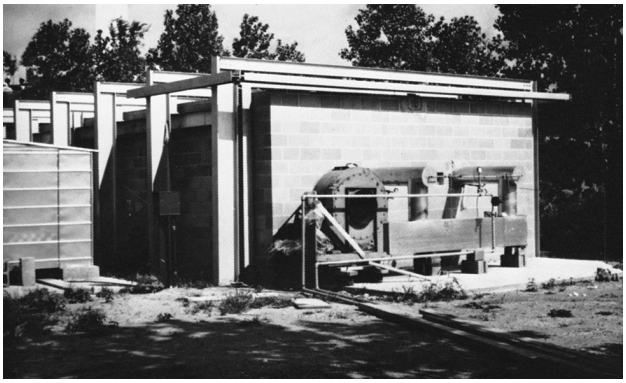

FIGURE A.38.3.2(b) View of Firing Mechanism of Fire Test Building.

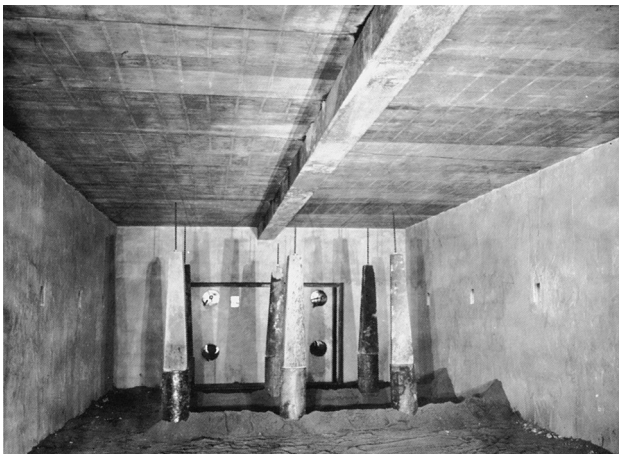

FIGURE A.38.3.2(c) Interior View of Firing End of Fire Test Building.

Copyright National Fire Protection Association
Provided by IHS under license with NFPA
No reproduction or networking permitted without license from IHS
Not for Resale

A.38.6.2 The following apply to secondary roof drainage systems:

(1) The design rainfall rate (inches per hour) for the 100-year MRI, 15-minute duration storm is considered to be equal to twice that of the 100-year MRI, 60-minute duration storm.
(2) Roofs that slope a minimum of ¼ in./ft (6.3 mm/305 mm) toward the roof eave with no gravel stops or parapets and that allow drainage directly over the edge of the roof are considered to provide adequate primary and secondary drainage.

A.38.8.1 The design of ventilation of enclosed roof spaces can be found in the ASHRAE *Handbook of Fundamentals*. Traditional methods of ventilating the roof of buildings include criteria for ventilated attics using the following:

(1) Cross ventilation should be provided for each separate space by openings protected against the entrance of rain and snow. For roof decks with a minimum slope of 2:12, ventilation to the underside of the roof deck should be provided at both a low point (soffit) and high point (ridge or gable end) of the roof .
(2) The total net area of ventilation should be at least 1/150 of the roof area, projected on a horizontal plane. The minimum required net free ventilating area is permitted to be reduced to 1/300 of the roof area of the space ventilated, provided that a vapor retarder having a transmission rate not exceeding 1 perm in accordance with ASTM E 96, *Standard Test Method for Water Vapor Transmission of Materials*, is installed on the warm side of the attic insulation and provided that 50 percent of the required ventilating area is provided by ventilators located in the upper portion of the space to be ventilated at least 36 in. (915 mm) above eave or cornice vents, with the balance of the required ventilation provided by eave or cornice vents.
(3) A minimum of 1 in. (25 mm) of air space should be provided between insulation and roof sheathing where the insulation is located at the plane of the ceiling.
(4) Blocking and bridging should be arranged so as not to interfere with the movement of air.

A.38.9.2.5 Isothermal data can be obtained from the ASHRAE *Handbook of Fundamentals*.

A.38.9.3.2 Controlled-flow drain roofs, where structural decks are designed for the additional weight of ponded water, are limited to positive slope toward drains.

A.38.9.3.4.2 For additional information, see FM Data Sheet 1-49, *Perimeter Flashing*.

A.38.9.3.5 FM 4470, *Approval Standard for Class 1 Roof Covers*, includes a test for corrosion resistance.

A.38.9.4.5 Isothermal data can be obtained from the ASHRAE *Handbook of Fundamentals*.

A.38.9.5.2 Controlled-flow drain roofs, where structural decks are designed for the additional weight of ponded water, are limited to positive slope toward drains.

A.38.9.6.2 Controlled-flow drain roofs, where structural decks are designed for the additional weight of ponded water, are limited to positive slope toward drains.

A.38.9.6.4.2 For additional information, see FM Data Sheet 1-49, *Perimeter Flashing*.

A.38.9.6.5 FM 4470, *Approval Standard for Class 1 Roof Covers*, includes a test for corrosion resistance.

A.38.9.7.5 Isothermal data can be obtained from the ASHRAE *Handbook of Fundamentals*.

A.38.9.7.6.2 For additional information, see FM Data Sheet 1-49, *Perimeter Flashing*.

A.38.9.7.8.2 Test equipment must be of adequate size for the tributary area of the roof specimen to properly quantify the wind resistance of roof systems. Standing seam metal roof panels (SSR) are typically 5 ft (1525 mm) on center and often vary from 4 ft to 6 ft (1220 mm to 1830 mm) on center. FM 4471, *Approval Standard for Class 1 Panel Roofs*, is used to test wind uplift resistance of metal panel roofs. The test uses a nominal 12 ft × 24 ft (3660 mm × 7315 mm) test assembly. Panels span in the long dimension, which allows for four or more spans of roof panel based on the spans specified here. Similarly, ASTM E 1592, *Standard Test Method for Structural Performance of Sheet Metal Roof and Siding Systems by Uniform Static Air Pressure Difference*, has specific requirements regarding the number of spans that meets or exceeds the proposed criteria.

The tests in UL 580, *Standard for Tests for Uplift Resistance of Roof Assemblies*, and UL 1897, *Standard for Safety for Uplift Tests for Roof Covering Systems*, have a limited minimum test size (10 ft × 10 ft) (3050 mm × 3050 mm), but do not have a limit on the maximum span of roof panel used in the assembly tested.

The fastener spacing for many metal panel roofs is such that they require larger tests, such as 12 ft × 24 ft (3660 mm × 7315 mm). Otherwise the assemblies could fail at much lower pressures in actual installations than are indicated in the 10 ft × 10 ft (3050 mm × 3050 mm) tests.

A.38.9.8.5 Isothermal data can be obtained from the ASHRAE *Handbook of Fundamentals*.

A.38.9.9.5 Isothermal data can be obtained from the ASHRAE *Handbook of Fundamentals*.

A.38.9.9.6.2 For additional information, see FM Data Sheet 1-49, *Perimeter Flashing*.

A.38.9.9.7 FM 4470, *Approval Standard for Class 1 Roof Covers*, includes a test for corrosion resistance.

A.38.9.10.5 Isothermal data can be obtained from the ASHRAE *Handbook of Fundamentals*.

A.38.9.10.7 FM 4470, *Approval Standard for Class 1 Roof Covers*, includes a test for corrosion resistance.

A.38.9.11.2 Controlled-flow drain roofs, where structural decks are designed for the additional weight of ponded water, are limited to positive slope toward drains.

A.38.9.11.4.2 For additional information, see FM Data Sheet 1-49, *Perimeter Flashing*.

A.38.9.11.5 FM 4470, *Approval Standard for Class 1 Roof Covers*, includes a test for corrosion resistance.

A.38.9.12.2 Controlled-flow drain roofs, where structural decks are designed for the additional weight of ponded water, are limited to positive slope toward drains.

A.38.9.12.4.2 For additional information, see FM Data Sheet 1-49, *Perimeter Flashing*.

A.38.9.12.5 FM 4470, *Approval Standard for Class 1 Roof Covers*, includes a test for corrosion resistance.

Copyright National Fire Protection Association
Provided by IHS under license with NFPA
No reproduction or networking permitted without license from IHS
Not for Resale

A.38.9.12.6.2 For additional information, see FM Data Sheet 1-29, *Above-Deck Roof Components*.

A.38.9.13.5 Isothermal data can be obtained from the ASHRAE *Handbook of Fundamentals*.

A.38.9.14.5 Isothermal data can be obtained from the ASHRAE *Handbook of Fundamentals*.

A.39.1 Resisting the effects of flood hazards and flood loads is generally accomplished through several means, as follows:

(1) Siting the building or structure so as not to be exposed to the most severe flood hazards
(2) Elevating the building or structure so its lowest floor is at or above the design flood elevation (DFE), or, in the case of nonresidential and certain multiple-occupancy buildings and structures, making the building or structure watertight and substantially impermeable to the passage of floodwaters (dry floodproofing)
(3) Supporting the building or structure on a foundation designed and constructed to resist all anticipated flood loads
(4) Constructing that portion of the building or structure below the DFE with materials that are resistant to flood damage
(5) In areas not subject to high-velocity wave action, incorporating flood openings in walls forming an enclosure below the DFE to allow the automatic equalization of floodwaters
(6) In areas subject to high-velocity wave action, using breakaway construction and keeping the area below the DFE free of obstructions that could transfer additional flood loads to the elevated building or structure

A.39.2.13 Note that the average of surrounding grade elevations is not used for flood-resistant design and construction. Flood provisions frequently refer to "adjacent grade," which is the grade elevation adjacent to a wall, or to "highest adjacent grade," which is the highest grade elevation adjacent to any of the walls.

A.39.2.20.1 The actual start of construction means the first placement of permanent construction of a building (including a manufactured home) on a site, such as the pouring of a slab or footings, installation of pilings, or construction of columns. Permanent construction does not include land preparation (such as clearing, excavation, grading, or filling); the installation of streets and walkways; the excavation for a basement, footings, piers, or foundations; the erection of temporary forms; or the installation of accessory buildings, such as garages or sheds not occupied as dwelling units and not part of the main building. For a substantial improvement, the actual start of construction means the first alteration of any wall, ceiling, floor, or other structural part of the building, whether or not that alteration affects the exterior dimensions of the building.

A.39.3.2 Communities that regulate to a higher flood elevation than the BFE typically establish the DFE in one of several ways, as follows:

(1) By adding "freeboard" to the BFE—that is, by requiring the lowest floor of a building or structure to be elevated or floodproofed to some specified height above the BFE
(2) By establishing the DFE at the elevation of the flood of record
(3) By basing flood hazard areas and elevations on the 1 percent annual chance flood under build-out conditions (that is, the ultimate development discharge).

A.39.5.5 This *Code* does not require materials in buildings entirely outside the flood hazard area to be flood damage resistant, nor does it require — for any building — that materials above the elevations specified by ASCE/SEI 24, *Flood-Resistant Design and Construction*, be flood damage resistant. However, there are circumstances where basements of buildings just outside the flood hazard area can be damaged during the base flood. FEMA Technical Bulletin 10-01, *Ensuring that Structures Built on Fill in or Near Special Flood Hazard Areas are Reasonably Safe from Flooding*, provides guidance for this situation.

A.39.9 Guidance on flood damage–resistant materials can be found in FEMA Technical Bulletin 2-93, *Flood-Resistant Materials Requirements for Buildings Located in Special Flood Hazard Areas*, and in FEMA Technical Bulletin 8-96, *Corrosion Protection for Metal Connectors in Coastal Areas*.

A.39.10 Additional information on making utility systems and equipment flood damage resistant can be found in FEMA 348, *Protecting Building Utilities from Flood Damage: Principles and Practices for the Design and Construction of Flood Resistant Building Utility Systems*.

A.39.11.1.1 Information on flood openings can be found in FEMA Technical Bulletin 1-93, *Openings in Foundation Walls for Buildings Located in Special Flood Hazard Areas*.

A.39.11.1.2 Information on floodproofing can be found in FEMA Technical Bulletin 3-93, *Nonresidential Floodproofing — Requirements and Certification for Buildings Located in Special Flood Hazard Areas*, and in FEMA Technical Bulletin 7-93, *Wet Floodproofing Requirements for Structures Located in Special Flood Hazard Areas*.

A.39.11.2 Information on free-of-obstruction requirements can be found in FEMA Technical Bulletin 5-93, *Free-of-Obstruction Requirements for Buildings Located in Coastal High Hazard Areas*.

A.39.11.2.1 Information on breakaway walls can be found in FEMA Technical Bulletin 9-99, *Design and Construction Guidance for Breakaway Walls Below Elevated Coastal Buildings*.

A.40.2.3.3 ASCE/SEI 7, *Minimum Design Loads for Buildings and Other Structures*, Section 11A.1 provides nationally recognized guidance for quality assurance for structures subject to earthquake ground motions.

A.44.1.1.3.2 Hold-down anchors for Type II shear walls are provided at the ends of the wall.

A.45.2.2 The lignocellulosic fibers are usually wood or cane.

A.45.2.6 The cellulosic material is usually wood.

A.45.4.1.1 Additional information can be found in the AF&PA *Manual for Engineered Wood Construction*.

A.45.4.2.1 Additional information can be found in the AF&PA *Manual for Engineered Wood Construction*:

A.45.6.9.6.16 Detailed design and construction information, including information about appropriate preservative-treated lumber, is available in the AF&PA Technical Report No. 7, *Permanent Wood Foundation System*, and in the Southern Pine Council, *Permanent Wood Foundations: Design and Construction Guide*.

A.47.1.5.9.2 Weather-exposed surfaces do not include the following:

(1) Ceilings and roof soffits enclosed by walls, fascia, bulkheads, or beams that extend a minimum of 12 in. (305 mm) below such ceiling or roof soffits

--`,,```,,,,````-`-`,,`,,`,`,,`---
Copyright National Fire Protection Association
Provided by IHS under license with NFPA
No reproduction or networking permitted without license from IHS
Not for Resale

(2) Walls or portions of walls beneath an unenclosed roof area, where located at a horizontal distance from an open exterior opening equal to at least twice the height of the opening
(3) Ceiling and roof soffits located at a minimum horizontal distance of 10 ft (3050 mm) from the outer edges of the ceiling or roof soffits

A.48.2.2 Panels, grids, baffles, or lenses that are part of an electrical light fixture are not considered a light-diffusing system.

A.48.2.4.1 Skylights are not considered light-transmitting plastic roof panels.

A.48.2.4.2 Plastic glazing is not considered a light-transmitting plastic wall panel.

A.48.3.2.1 NFPA 255, *Standard Method of Test of Surface Burning Characteristics of Building Materials*; UL 723, *Standard Test for Surface Burning Characteristics of Building Materials*; and ASTM E 84, *Standard Test Method for Surface Burning Characteristics of Building Materials*, are considered nationally recognized methods of determining surface burning characteristics and have been found to yield equivalent test results.

A.48.4.1.2 NFPA 251, *Standard Methods of Tests of Fire Resistance of Building Construction and Materials*; UL 263, *Standard for Fire Tests of Building Construction and Materials*; and ASTM E 119, *Standard Test Methods for Fire Tests of Building Construction and Materials*, are considered nationally recognized methods of determining fire resistance and have been found to yield equivalent test results.

A.48.7.4.1 In nonsprinklered buildings, some restrictions might apply. See the specific occupancy chapter.

A.48.7.5.1 In nonsprinklered buildings, some restrictions might apply. See the specific occupancy chapter.

A.49.2.5.2.3 Figure 49.2.5.2.3 assigns each of the 3141 counties in the United States to one of three zones based on radon potential. Each zone designation reflects the average short-term radon measurement that can be expected to be measured in a building without the implementation of radon control methods. The radon zone designation of highest potential is Zone 1. Table A.49.2.5.2.3 lists the Zone 1 counties illustrated on the map. More detailed information can be obtained from state-specific booklets (EPA-402-R-93-021 through 070), which are available through state radon offices.

A.49.2.6 Note that the ventilation openings discussed in 49.2.6 are not the same as the flood openings required by 39.11.1.1 (flood openings must be installed below the design flood elevation).

A.52.1 NFPA 70, *National Electrical Code*, addresses the fundamental principles of protection for safety contained in IEC 60364-1, *Electrical Installations of Buildings*, Section 131. Such compliance is stated in Section 90.1(D) of the 2002 edition of NFPA 70, *National Electrical Code*. There are other electrical codes that also comply with IEC 60364-1.

A.54.8 For additional guidance, see FEMA Technical Bulletin 4-93, *Elevator Installation for Buildings Located in Special Flood Hazard Areas*.

A.55.2.1 Section 55.2 covers the basic functions of a complete fire alarm system, including fire detection, alarm, and communications. These systems are primarily intended to provide the indication and warning of abnormal conditions, the summoning of appropriate aid, and the control of building equipment functions to enhance protection of life and property.

A.55.2.2.1.4 It is not the intent of 55.2.2.1.4 to require manual fire alarm boxes to be attached to movable partitions or to equipment, nor is it the intent to require the installation of permanent structures for mounting purposes only.

A.55.2.2.1.5 The manual fire alarm box required by 55.2.2.1.5 is intended to provide a means to manually activate the fire alarm system when the automatic fire detection system or waterflow devices are out of service due to maintenance or testing, or where human discovery of the fire precedes automatic sprinkler system or automatic detection system activation. Where the fire alarm system is connected to a monitoring facility, the manual fire alarm box required by 55.2.2.1.5 should be connected to a separate circuit that is not placed "on test" when the detection or sprinkler system is placed "on test." The manual fire alarm box should be located in an area that is accessible to occupants of the building and should not be located in a locked location.

A.55.2.2.1.7 Manual fire alarm boxes can include those with key-operated locks for detention areas or psychiatric hospitals, manual fire alarm boxes in areas where explosive vapors or dusts might be a hazard, or manual fire alarm boxes in areas with corrosive atmospheres. The appearance of manual fire alarm boxes for special uses often differs from those used in areas of normal occupancy. Manual fire alarm boxes, such as those with locks, that are located in areas where the general public has limited access might need to have signage advising persons to seek assistance from staff in the event of a fire.

A.55.2.2.6.3 A dwelling unit is that structure, area, room, or combination of rooms, including hotel rooms/suites, in which a family or individual lives. A dwelling unit includes living areas only and not common use areas in apartment buildings such as corridors, lobbies, and basements.

A.55.2.3.6.2 In order to approve an evacuation plan to selectively notify building occupants, the authority having jurisdiction should consider several building parameters, including building compartmentation, detection and suppression system zones, occupant loads, and the number and arrangement of the means of egress.

In high-rise buildings, it is typical to evacuate the fire floor, the floor(s) above, and the floor immediately below. Other areas are then evacuated as the fire develops.

A.55.2.4.3 If the supervisory signals and trouble signals are sounded and displayed at a location within the protected building that is constantly attended by qualified personnel, it is the intent that the receiving location is required to be staffed 24 hours per day, 7 days per week. The transmission of supervisory signals and trouble signals is important for property protection purposes, even at times when the remainder of the building is unoccupied. Where the means used to automatically transmit an alarm does not include the transmission of trouble or supervisory signals, or both, to the receiving station or public fire communications center, it is the intent that these signals be transmitted to another location.

A.55.3.1.1 For a discussion of the effectiveness of automatic sprinklers, as well as a general discussion on automatic sprinklers, see the NFPA *Fire Protection Handbook*. Where partial sprinkler protection is permitted by another section of this *Code*, the limited area systems provisions of NFPA 13, *Standard for the Installation of Sprinkler Systems*, should apply.

Copyright National Fire Protection Association
Provided by IHS under license with NFPA
No reproduction or networking permitted without license from IHS
Not for Resale

Table A.49.2.5.2.3 High Radon Potential (Zone 1) Counties

ALABAMA
Calhoun
Clay
Cleburne
Colbert
Coosa
Franklin
Jackson
Lauderdale
Lawrence
Limestone
Madison
Morgan
Talladega

CALIFORNIA
Santa Barbara
Ventura

COLORADO
Adams
Arapahoe
Baca
Bent
Boulder
Chaffee
Cheyenne
Clear Creek
Crowley
Custer
Delta
Denver
Dolores
Douglas
El Paso
Elbert
Fremont
Garfield
Gilpin
Grand
Gunnison
Huerfano
Jackson
Jefferson
Kiowa
Kit Carson
Lake
Larimer
Las Animas
Lincoln
Logan
Mesa
Moffat
Montezuma
Montrose
Morgan
Otero
Ouray
Park
Phillips
Pitkin
Prowers
Pueblo
Rio Blanco
San Miguel
Summit
Teller
Washington
Weld
Yuma

CONNECTICUT
Fairfield
Middlesex
New Haven
New London

GEORGIA
Cobb
De Kalb
Fulton
Gwinnett

IDAHO
Benewah
Blaine
Boise
Bonner
Boundary
Butte
Camas
Clark
Clearwater
Custer
Elmore
Fremont
Gooding
Idaho
Kootenai
Latah
Lemhi
Shoshone
Valley

ILLINOIS
Adams
Boone
Brown
Bureau
Calhoun
Carroll
Cass
Champaign
Coles
De Kalb
De Witt
Douglas
Edgar
Ford
Fulton
Greene
Grundy
Hancock
Henderson
Henry
Iroquois
Jersey
Jo Daviess
Kane
Kendall
Knox
La Salle
Lee
Livingston
Logan
Macon
Marshall
Mason
McDonough
McLean
Menard
Mercer
Morgan
Moultrie
Ogle
Peoria
Piatt
Pike
Putnam
Rock Island
Sangamon
Schuyler
Scott
Stark
Stephenson
Tazewell
Vermilion
Warren
Whiteside
Winnebago
Woodford

INDIANA
Adams
Allen Bartholomew
Benton
Blackford
Boone
Carroll
Cass
Clark
Clinton
De Kalb
Decatur
Delaware
Elkhart
Fayette
Fountain
Fulton
Grant
Hamilton
Hancock
Harrison
Hendricks
Henry
Howard
Huntington
Jay
Jennings
Johnson
Kosciusko
Lagrange
Lawrence
Madison
Marion
Marshall
Miami
Monroe
Montgomery
Noble
Orange
Putnam
Randolph
Rush
Scott
Shelby
Steuben
St. Joseph
Tippecanoe
Tipton
Union
Vermillion
Wabash
Warren
Washington
Wayne
Wells
White
Whitley
IOWA
All counties

KANSAS
Atchison
Barton
Brown
Cheyenne
Clay
Cloud
Decatur
Dickinson
Douglas
Ellis
Ellsworth
Finney
Ford
Geary
Gove
Graham
Grant
Gray
Greeley
Hamilton
Haskell
Hodgeman
Jackson
Jewell
Johnson
Kearny
Kingman
Kiowa
Lane
Leavenworth
Lincoln
Logan
Marion
Marshall
McPherson
Meade
Mitchell
Nemaha
Ness
Norton
Osborne
Ottawa
Pawnee
Phillips
Pottawatomie
Pratt
Rawlins
Republic
Rice
Riley
Rooks
Rush
Russell
Saline
Scott
Sheridan
Sherman
Smith
Stanton
Thomas
Trego
Wallace
Washington
Wichita
Wyandotte

KENTUCKY
Adair
Allen
Barren
Bourbon
Boyle
Bullitt
Casey
Clark
Cumberland
Fayette
Franklin
Green
Harrison
Hart
Jefferson
Jessamine
Lincoln
Marion
Mercer
Metcalfe
Monroe
Nelson
Pendleton
Pulaski
Robertson
Russell
Scott
Taylor
Warren
Woodford

MAINE
Androscoggin
Aroostook
Cumberland
Franklin
Hancock
Kennebec
Lincoln
Oxford
Penobscot
Piscataquis
Somerset
York

MARYLAND
Baltimore
Calvert
Carroll
Frederick
Harford
Howard
Montgomery
Washington

MASSACHUSETTS
Essex
Middlesex
Worcester

MICHIGAN
Branch
Calhoun
Cass
Hillsdale
Jackson
Kalamazoo
Lenawee
St. Joseph
Washtenaw

MINNESOTA
Becker
Big Stone
Blue Earth
Brown
Carver
Chippewa
Clay
Cottonwood
Dakota
Dodge
Douglas
Faribault
Fillmore
Freeborn
Goodhue
Grant
Hennepin
Houston
Hubbard

(continues)

Copyright National Fire Protection Association
Provided by IHS under license with NFPA
No reproduction or networking permitted without license from IHS
Not for Resale

Table A.49.2.5.2.3 ***Continued***

Jackson
Kanabec
Kandiyohi
Kittson
Lac Qui Parle
Le Sueur
Lincoln
Lyon
Mahnomen
Marshall
Martin
McLeod
Meeker
Mower
Murray
Nicollet
Nobles
Norman
Olmsted
Otter Tail
Pennington
Pipestone
Polk
Pope
Ramsey
Red Lake
Redwood
Renville
Rice
Rock
Roseau
Scott
Sherburne
Sibley
Stearns
Steele
Stevens
Swift
Todd
Traverse
Wabasha
Wadena
Waseca
Washington
Watonwan
Wilkin
Winona
Wright
Yellow Medicine

MISSOURI
Andrew
Atchison
Buchanan
Cass
Clay
Clinton
Holt
Iron
Jackson
Nodaway
Platte

MONTANA
Beaverhead
Big Horn
Blaine
Broadwater
Carbon
Carter
Cascade
Chouteau
Custer
Daniels
Dawson
Deer Lodge
Fallon
Fergus
Flathead
Gallatin
Garfield
Glacier
Granite
Hill
Jefferson
Judith Basin
Lake
Lewis and Clark
Liberty
Lincoln
Madison
McCone
Meagher
Mineral
Missoula
Park
Phillips
Pondera
Powder River
Powell
Prairie
Ravalli
Richland
Roosevelt
Rosebud
Sanders
Sheridan
Silver Bow
Stillwater
Teton
Toole
Valley Wibaux
Yellowstone
National Park

NEBRASKA
Adams
Boone
Boyd
Burt
Butler
Cass
Cedar
Clay
Colfax
Cuming
Dakota
Dixon
Dodge
Douglas
Fillmore
Franklin
Frontier
Furnas
Gage
Gosper
Greeley
Hamilton
Harlan
Hayes
Hitchcock
Hurston
Jefferson
Johnson
Kearney
Knox
Lancaster
Madison
Nance
Nemaha
Nuckolls
Otoe
Pawnee
Phelps
Pierce
Platte
Polk
Red Willow
Richardson
Saline
Sarpy
Saunders
Seward
Stanton
Thayer
Washington
Wayne
Webster
York

NEW HAMPSHIRE
Carroll

NEW JERSEY
Hunterdon
Mercer
Monmouth
Morris
Somerset
Sussex
Warren

NEW MEXICO
Bernalillo
Colfax
Mora
Rio Arriba
San Miguel
Santa Fe
Taos

NEVADA
Carson
CityDouglas
Eureka
Lander
Lincoln
Lyon
Mineral
Pershing
White Pine

NEW YORK
Albany
Allegany
Broome
Cattaraugus
Cayuga
Chautauqua
Chemung
Chenango
Columbia
Cortland
Delaware
Dutchess
Erie
Genesee
Greene
Livingston
Madison
Onondaga
Ontario
Orange
Otsego
Putnam
Rensselaer
Schoharie
Schuyler
Seneca
Steuben
Sullivan
Tioga
Tompkins
Ulster
Washington
Wyoming
Yates

N. CAROLINA
Alleghany
Buncombe
Cherokee
Henderson
Mitchell
Rockingham
Transylvania
Watauga

N. DAKOTA
All counties

OHIO
Adams
Allen
Ashland
Auglaize
Belmont
Butler
Carroll
Champaign
Clark
Clinton
Columbiana
Coshocton
Crawford
Darke
Delaware
Fairfield
Fayette
Franklin
Greene
Guernsey
Hamilton
Hancock
Hardin
Harrison Holmes
Huron
Jefferson
Knox
Licking
Logan
Madison
Marion
Mercer
Miami
Montgomery
Morrow
Muskingum
Perry
Pickaway
Pike
Preble
Richland
Ross
Seneca
Shelby
Stark
Summit
Tuscarawas
Union
Van Wert
Warren
Wayne
Wyandot

PENNSYLVANIA
Adams
Allegheny
Armstrong
Beaver
Bedford
Berks
Blair
Bradford
Bucks
Butler
Cameron
Carbon
Centre
Chester
Clarion
Clearfield
Clinton
Columbia
Cumberland
Dauphin
Delaware
Franklin
Fulton
Huntingdon
Indiana
Juniata
Lackawanna
Lancaster
Lebanon
Lehigh
Luzerne
Lycoming
Mifflin
Monroe
Montgomery
Montour
Northampton
Northumberland
Perry
Schuylkill
Snyder
Sullivan
Susquehanna
Tioga
Union
Venango
Westmoreland
Wyoming
York

RHODE ISLAND
Kent
Washington

S. CAROLINA
Greenville

S. DAKOTA
Aurora
Beadle
Bon Homme
Brookings
Brown
Brule
Buffalo
Campbell
Charles Mix

Copyright National Fire Protection Association
Provided by IHS under license with NFPA
No reproduction or networking permitted without license from IHS
Not for Resale

Table A.49.2.5.2.3 *Continued*

Clark	Yankton	Wayne	Giles	Clark	Marathon
Clay		Williamson	Goochland	Ferry	Menominee
Codington	TENNESSEE	Wilson	Harrisonburg	Grant	Pepin
Corson	Anderson		Henry	Greenbrier	Pierce
Davison	Bedford	UTAH	Highland	Hampshire	Portage
Day	Blount	Carbon	Lee	HancockHardy	Richland
Deuel	Bradley	Duchesne	Lexington	Jefferson	Rock
Douglas	Claiborne	Grand	Louisa	Marshall	Shawano
Edmunds	Davidson	Piute	Martinsville	Mercer	St. Croix
Faulk	Giles	Sanpete	Montgomery	Mineral	Vernon
Grant	Grainger	Sevier	Nottoway	Monongalia	Walworth
Hamlin	Greene	Uintah	Orange	Monroe	Washington
Hand	Hamblen		Page	Morgan	Waukesha
Hanson	Hancock	VIRGINIA	Patrick	Ohio	Waupaca
Hughes	Hawkins	Alleghany	Pittsylvania	Okanogan	Wood
Hutchinson	Hickman	Amelia	Powhatan	Pend Oreille	
Hyde	Humphreys	Appomattox	Pulaski	Pendleton	WYOMING
Jerauld	Jackson	Augusta	Radford	Pocahontas	Albany
Kingsbury	Jefferson	Bath	Roanoke	Preston	Big Horn
Lake	Knox	Bland	Rockbridge	Skamania	Campbell
Lincoln	Lawrence	Botetourt	Rockingham	Spokane	Carbon
Lyman	Lewis	Bristol	Russell	Stevens	Converse
Marshall	Lincoln	Brunswick	Salem	Summers	Crook
McCook	Loudon	Buckingham	Scott	Wetzel	Fremont
McPherson	Marshall	Buena Vista	Shenandoah		Goshen
Miner	Maury	Campbell	Smyth	WISCONSIN	Hot Springs
Minnehaha	McMinn	Chesterfield	Spotsylvania	Buffalo	Johnson
Moody	Meigs	Clarke	Stafford	Crawford	Laramie
Perkins	Monroe	Clifton Forge	Staunton	Dane	Lincoln
Potter	Moore	Covington	Tazewell	Dodge	Natrona
Roberts	Perry	Craig	Warren	Door	Niobrara
Sanborn	Roane	Cumberland	Washington	Fond du Lac	Park
Spink	Rutherford	Danville	Waynesboro	Grant	Sheridan
Stanley	Smith	Dinwiddie	Winchester	Green	Sublette
Sully	Sullivan	Fairfax	Wythe	Green Lake	Sweetwater
Turner	Trousdale	Falls Church		Iowa	Teton
Union	Union	Fluvanna	WASHINGTON	Jefferson	Uinta
Walworth	Washington	Frederick	Berkeley	Lafayette	Washakie
		Fredericksburg	Brooke	Langlade	

Note: EPA recommends that this county listing be supplemented with other available and local data to further understand the radon potential of Zone 1 areas.

A.55.3.1.4 Properly designed automatic sprinkler systems provide the dual function of both automatic alarms and automatic extinguishment. Dual function is not provided in those cases where early detection of incipient fire and early notification of occupants are needed to initiate actions on behalf of life safety earlier than can be expected from heat-sensitive fire detectors.

A.55.3.2.1 *NFPA 72, National Fire Alarm Code*, provides details of standard practice in sprinkler supervision. Subject to the approval of the authority having jurisdiction, sprinkler supervision is also permitted to be provided by direct connection to municipal fire departments or, in the case of very large establishments, to a private headquarters providing similar functions. *NFPA 72* covers such matters. Where municipal fire alarm systems are involved, reference should also be made to NFPA 1221, *Standard for the Installation, Maintenance, and Use of Emergency Services Communications Systems.*

A.55.7.1 For guidance on designing smoke control systems, see NFPA 92A, *Recommended Practice for Smoke-Control Systems*, and NFPA 92B, *Standard for Smoke Management Systems in Malls, Atria, and Large Spaces.*

Annex B Vermin Proofing

This annex is not a part of the requirements of this NFPA document but is included for informational purposes only.

Information in this annex is intended to be adopted by the jurisdiction at the discretion of the adopting jurisdiction. Thus, although the language in this annex is written in mandatory language, it is not intended to be enforced or applied unless specifically adopted by the jurisdiction.

B.1 Application. The provisions of Section B.2 shall apply to occupancies regulated by Chapters 16 through 28. All metal or wire protection systems and components referenced in the following provisions shall consist of corrosion-resistant materials.

Copyright National Fire Protection Association
Provided by IHS under license with NFPA
No reproduction or networking permitted without license from IHS
Not for Resale

B.2 Vermin Proofing.

B.2.1 Underground Walls and Floors Below Grade. Walls and floors below grade shall be constructed in accordance with the provisions of B.2.2 and B.2.3.

B.2.2 Floors on Grade. Floors on grade shall be constructed of a minimum 2 in. (51 mm) thick concrete slab continuous from foundation wall to foundation wall and shall abut the foundation wall. Openings within the floor shall be protected by covering the openings or annular space through the use of concrete infill, metal plates, metal screening, or metal grating designed to prevent access by vermin. The requirement of B.2.2 shall not apply to expansion joints, thermal breaks, and control joints.

B.2.3 Underground Walls. Openings, other than doors and windows, through underground walls shall be protected with metal plates, cast-iron grilles or grating, or wire-mesh screening that is designed to prevent access by vermin.

B.2.4 Doors and Windows. Doors and windows that open to the exterior (outside) shall be protected in accordance with the provisions of B.2.4.1 and B.2.4.2.

B.2.4.1 Doors. Swinging doors shall have a ⅜ in. (10 mm) maximum clearance from the bottom of the door to the top of the door sill. All nonmetal or nonmetal-clad doors shall have a metal kick plate fastened to the exterior face of the door. The metal kick plate shall be of a size that extends from jamb to jamb and shall extend from the bottom of the door a minimum height of 8 in. (205 mm) and shall be a minimum of 0.033 in. (0.83 mm) thick steel or aluminum.

B.2.4.2 Windows. Operable windows that have sills located less than 24 in. (610 mm) above grade shall be protected by a metal wire screen and frame covering the entire operable portion.

B.2.5 Other Protection Requirements. Utility lines, communication wiring, exposed conduits and pipes, and other appurtenances that are located within 24 in. (610 mm) of window, door, or other openings shall be protected from vermin using one of the following methods:

(1) Installation of metal collars fastened to exposed conduits and pipes that are designed to prevent the passage of vermin from traveling the conduits or pipes
(2) Installation of metal guards fastened to the building that project a minimum of 12 in. (305 mm) perpendicular from the face of the building for the length of the opening plus 24 in. (610 mm) beyond each end of the opening

Annex C Flood Resistant Construction

This annex is not a part of the standing requirements of this NFPA document but is included for informational purposes. Information in this annex is intended to be adopted by the jurisdiction at the discretion of the adopting jurisdiction. Thus, although the language in this annex is written in mandatory language, it is not intended to be enforced or applied unless specifically adopted by the jurisdiction.

C.1 Administration.

C.1.1 Purpose. The purpose of this annex shall be to promote the public health, safety, and general welfare and to minimize public and private losses due to flood conditions in specific flood hazard areas through the establishment of comprehensive regulations for management of flood hazard areas.

C.1.2 Objectives. The objectives of this annex shall be as follows:

(1) Protection of human life
(2) Minimization of the expenditure of public money for flood control projects
(3) Minimization of the need for rescue and relief efforts associated with flooding
(4) Minimization of prolonged business interruption
(5) Minimization of damage to public facilities and utilities
(6) Maintenance of a stable tax base by providing for the sound use and development of flood-prone areas
(7) Contribution to improved construction techniques in the floodplain
(8) Assurance that potential owners and occupants are notified that property is within flood hazard areas

C.1.3 Scope. The provisions of this annex shall apply to all proposed development in flood hazard areas established in 39.4.2 and are in addition to the flood-resistant provisions found elsewhere in the *Code*.

C.1.4 Violations. Any violation of a provision of this annex, or failure to comply with a permit or variance issued pursuant to this annex or any requirement of this annex, shall be handled in accordance with 1.7.7.2.

C.1.5 Applicability.

C.1.5.1 Minimum Requirements. This annex, in conjunction with the *Code*, shall provide minimum requirements for development proposed within flood hazard areas, including the subdivision of land, site improvements, installation of utilities, underground and aboveground tanks, placement and replacement of manufactured homes, and recreational vehicles.

C.1.5.2 Establishment of Flood Hazard Areas. Flood hazard areas shall be as established in 39.4.2.

C.2 Powers and Duties.

C.2.1 Permit Applications. The authority having jurisdiction shall review all permit applications to determine whether proposed development sites will be reasonably safe from flooding. If a proposed development site, or portion thereof, is in a flood hazard area, all site development activities in the flood hazard area, including grading, filling, utility installation, tank installation, and drainage modification, and all new construction, substantial improvements, and restoration of substantial damage (including the placement of prefabricated buildings, manufactured homes, and recreational vehicles) shall be designed and constructed with methods, practices, and materials that minimize flood damage and that are in accordance with this *Code*.

C.2.2 Other Permits. It shall be the responsibility of the authority having jurisdiction to ensure that approval of a proposed development shall not be given until proof is obtained that necessary permits have been granted by federal or state agencies having jurisdiction over such development.

C.2.3 Determination of Design Flood Elevations. If design flood elevations are not specified, the authority having jurisdiction shall take one of the following actions:

(1) It shall obtain, review, and reasonably utilize data available from a federal, a state, or other source.

Copyright National Fire Protection Association
Provided by IHS under license with NFPA
No reproduction or networking permitted without license from IHS
Not for Resale

(2) It shall determine the design flood elevation in accordance with accepted hydrologic and hydraulic engineering techniques, and such analyses shall be undertaken by a professional engineer licensed in this state who shall certify that the technical methods used reflect accepted engineering practice.
(3) It shall require the applicant to obtain and submit data available from a federal, a state, or other source or shall conduct the hydrologic and hydraulic analyses in C.2.3(2), and the following criteria also shall apply:
   (a) Studies, analyses, and computations shall be submitted in sufficient detail to allow thorough review and approval by the authority having jurisdiction.
   (b) The accuracy of data submitted for such determination shall be the responsibility of the applicant.

C.2.4 Activities in Riverine Flood Hazard Areas. In riverine situations, until a regulatory floodway is designated, the authority having jurisdiction shall not permit any new construction, substantial improvement, or other development, including fill, unless the applicant demonstrates that the cumulative effect of the proposed development, where combined with all other existing and anticipated development, will not increase the design flood elevation more than 12 in. (305 mm) at any point within the community.

C.2.5 Floodway Encroachment. Prior to issuing a permit for any encroachment into a floodway, including fill, new construction, substantial improvements, restoration of substantial damage, and other development or land-disturbing activity, the authority having jurisdiction shall require submission of an engineering analysis that demonstrates that such development will not cause any increase in the design flood elevation. Such analysis shall be prepared by a licensed engineer who shall certify that the technical methods used reflect accepted hydrologic and hydraulic engineering practice.

C.2.6 Floodway Revision. An encroachment into a floodway that increases the design flood elevation shall be permitted to be authorized, provided that the applicant has applied for a conditional flood hazard map revision and has received the approval of FEMA.

C.2.7 Watercourse Alteration.

C.2.7.1 Notification of Proposal. Prior to issuing a permit for any alteration or relocation of any watercourse, the authority having jurisdiction shall require the applicant to provide notification of the proposal to the appropriate authorities of all affected adjacent government jurisdictions, as well as appropriate state agencies. A copy of the notification shall be maintained in the permit records and submitted to the Federal Emergency Management Agency. The authority having jurisdiction shall require the applicant to maintain the waterway alteration in a manner that preserves the flood-carrying capacity of the waterway.

C.2.7.2 Engineering Analysis. The authority having jurisdiction shall require submission of an engineering analysis that demonstrates that the flood-carrying capacity of the altered or relocated portion of the watercourse will not be decreased. Such analyses shall be prepared by a professional engineer licensed in this state who shall certify that the technical methods used reflect currently accepted hydrologic and hydraulic engineering techniques.

C.2.8 Alterations in Coastal Areas. Prior to issuing a permit for any alteration of sand dunes or any alteration of mangrove stands in flood hazard areas subject to high-velocity wave action, the authority having jurisdiction shall require submission of an engineering analysis that demonstrates that the proposed alteration will not increase the potential for flood damage.

C.2.9 Records. The authority having jurisdiction shall maintain a permanent record of all permits issued in flood hazard areas, including copies of engineering analyses, certifications, and inspection reports. The authority having jurisdiction shall maintain a permanent record of all variance requests and variances granted for buildings and structures located in flood hazard areas established in 39.4.2.

C.3 Permits.

C.3.1 Permit Required. No person, firm, or corporation shall conduct any development in a flood hazard area without first obtaining from the authority having jurisdiction a permit for such development.

C.3.2 Application for Permit. The applicant shall file an application in writing on a form furnished by the authority having jurisdiction. Such application shall include the following:

(1) Identification and description of the development to be covered by the permit for which the application is made
(2) Description of the land on which the proposed work is to be conducted by legal description, street address, or similar description that will specifically identify the location of the proposed development site
(3) Site plan showing the delineation of flood hazard areas, floodway boundaries, flood zones, design flood elevations, ground elevations, proposed fill and excavation, and drainage patterns and facilities
(4) Use and occupancy for which the proposed development is intended
(5) Construction documents, grading, excavation and fill plans, and other information deemed appropriate by the authority having jurisdiction
(6) Valuation of the proposed work
(7) Signature of the applicant or applicant's authorized agent, who might be required to submit evidence to indicate such authority
(8) Other information as required by the authority having jurisdiction

C.3.3 Validity of Permit. The issuance of a permit under this annex shall not be construed to be a permit for, or an approval of, any violation of this annex or any other code or ordinance of the jurisdiction. The issuance of a permit based on submitted documents and information shall not prevent the authority having jurisdiction from requiring the correction of errors. The authority having jurisdiction is authorized to prevent occupancy or use of a structure or a site that is in violation of this annex or other codes or ordinances of the jurisdiction.

C.3.4 Expiration. A permit shall expire if the proposed development is not commenced within 6 months of the date of the permit or, if after commencing, the work is suspended or abandoned for a period of 6 months at any time. The authority having jurisdiction shall be permitted to extend such period if written application for such extension is requested in writing and justifiable cause is demonstrated.

C.3.5 Suspension or Revocation. The authority having jurisdiction is authorized to suspend or revoke a permit issued under this annex if any false statement, inaccurate or incomplete information, or misrepresentation of fact is made in the application or on the plans on which the permit was based, or if the permit is found to be in violation of any ordinance or code of this jurisdiction.

Copyright National Fire Protection Association
Provided by IHS under license with NFPA
No reproduction or networking permitted without license from IHS
Not for Resale

C.4 Variances.

C.4.1 General. The board of appeals established pursuant to 1.7.3 of this *Code* shall hear and decide requests for variances that would permit construction in a manner otherwise prohibited by the flood-related provisions of this *Code*. The board of appeals shall base its determination on technical justifications and has the right to attach such conditions to variances as it deems necessary to further the purposes and objectives of this *Code*.

C.4.2 Historic Structures. The board shall be permitted to grant a variance for the repair or rehabilitation of an historic structure upon a determination that the proposed repair or rehabilitation will not preclude the structure's continued designation as an historic structure and that the proposed repair or rehabilitation is the minimum necessary to preserve the historic character and design of the structure.

C.4.3 Floodways. Within any designated regulatory floodway, the board shall not grant a variance to the provisions of this *Code* if the variance would result in an increase in flood levels during the base flood discharge.

C.4.4 Conditions for Granting. The board shall be permitted to grant variances only under the following conditions:

(1) Demonstration by the applicant of good and sufficient cause
(2) Determination by the board that failure to grant the variance due to the unique physical characteristics of the property would result in exceptional hardship to the applicant
(3) Determination by the board that granting the variance will not result in increased flood heights, additional threats to public safety, extraordinary public expense, creation of nuisances, or fraud or victimization of the public
(4) Determination by the board that the variance will not conflict with federal, state, or local laws, regulations, or ordinances
(5) Determination by the board that, considering the flood hazard, the variance is the minimum necessary to afford relief
(6) Written notification to the applicant by the authority having jurisdiction, that construction of a structure below the base flood elevation will increase risk to life and property, that construction of a structure below the base flood elevation will result in increased premium rates for flood insurance, and that the increased insurance costs will be commensurate with the increased risk

C.4.5 Functionally Dependent Facilities. The board shall be permitted to grant a variance for the construction, substantial improvement, or restoration of substantial damage of a functionally dependent facility, provided that the conditions of Section C.4.4 and Section C.4.6 are met, along with the following additional conditions:

(1) Demonstration by the applicant that materials and methods will be used to minimize flood damage during the design flood
(2) Determination by the board that the work authorized by the variance will create no additional threats to public safety

C.4.6 Considerations. In reviewing requests for variances to the flood-related provisions of this *Code*, the board shall consider all technical evaluations and relevant factors, including the following:

(1) Danger of materials and debris being swept onto other lands and causing injury
(2) Danger to life and property due to flooding or erosion damage, and the safety of access to the property in times of flood for emergency vehicles
(3) Susceptibility of the proposed development, its facilities, and the contents of the facilities to flood damage, and the effects of such damage on present and future owners
(4) Importance of the services provided by the proposed development to the community
(5) Availability of alternate locations for the proposed development that are less subject to flooding and flood effects
(6) Compatibility of the proposed development with existing and anticipated development, and with community comprehensive and floodplain management plans
(7) Expected heights, velocity, duration, rate of rise, transport of debris and sediment by flood waters, and wave action expected at the site
(8) Costs of providing governmental services during and after flood conditions, including maintenance and repair of public utilities and infrastructure servicing the proposed development

C.5 Special Definitions. A list of special terms used in this annex follows.

C.5.1 Development (Flood Resistance). Any man-made changes to improved or unimproved real estate including, but not limited to, buildings or other structures, temporary or permanent storage of materials, mining, dredging, filling, grading, paving, excavation, drilling, or other land-disturbing activities.

C.5.2 Manufactured Home (Flood Resistance). For all matters related to installation or erection in flood hazard areas: (1) a structure, transportable in one or more sections, built on a chassis and designed to be used as a dwelling with or without a permanent foundation, when connected to the required utilities, and constructed to the Federal Manufactured Home Construction and Safety Standards and rules and regulations promulgated by the U.S. Department of Housing and Urban Development; (2) a mobile home, park trailer, travel trailer, and similar transportable structure that is placed on a site for 180 consecutive days or longer.

C.5.3 Manufactured Home Park or Subdivision (Flood Resistance). A parcel, or contiguous parcels, of land divided into two or more manufactured home lots.

C.5.4 Recreational Vehicle. A vehicle that is built on a single chassis, 400 ft^2 (37 m^2) or less when measured at the largest horizontal projection, designed to be self-propelled or permanently towable by a light-duty truck, and designed primarily not for use as a permanent dwelling but as temporary living quarters for recreational, camping, travel, or seasonal use. A recreational vehicle shall be considered ready for highway use if it is on its wheels or jacking system, is attached to the site only by quick-disconnect-type utilities and security devices, and has no permanently attached additions.

C.6 Subdivisions.

C.6.1 General Subdivisions. Any subdivision proposal, including proposals for manufactured home parks and subdivisions, or other proposed new development in a flood hazard area shall be reviewed to ensure the following:

(1) All such proposals are consistent with the need to minimize flood damage.

Copyright National Fire Protection Association
Provided by IHS under license with NFPA
No reproduction or networking permitted without license from IHS
Not for Resale

(2) All public utilities and facilities, such as sewer, gas, electric, and water systems, are located and constructed to minimize or eliminate flood damage.
(3) Adequate drainage is provided to reduce exposure to flood hazards.

C.6.2 Subdivision Requirements. The following requirements shall apply to any proposed subdivision, including proposals for manufactured home parks and subdivisions, any portion of which lies within a flood hazard area:

(1) The flood hazard area, including floodways and areas subject to high-velocity wave action, shall be delineated on tentative and final subdivision plats.
(2) Design flood elevations shall be shown on tentative and final subdivision plats.
(3) Residential building lots shall be provided with adequate buildable area outside the floodway.
(4) The design criteria for utilities and facilities set forth in this annex and other appropriate codes shall be met.

C.7 Site Improvements.

C.7.1 Development in Floodways. Development or land-disturbing activity shall not be authorized in a floodway, unless it has been demonstrated through hydrologic and hydraulic analyses performed by a registered engineer in accordance with standard engineering practice that the proposed development or grading or fill, or both, will not cause any increase in the design flood elevation.

C.7.2 Flood Hazard Areas Subject to High-Velocity Wave Action. Flood hazard areas subject to high-velocity wave action shall comply with following:

(1) Construction, substantial improvements, and restoration of substantial damage shall only be authorized landward of the reach of mean high tide.
(2) The use of fill for structural support of buildings and structures shall be prohibited.

C.7.3 Utilities in Flood Hazard Areas. Utilities and facilities, if located wholly or partly within the flood hazard area established by 39.4.2, shall comply with the following requirements:

(1) Public utilities and facilities, such as sewer, gas, electrical, and water systems, shall be located and constructed to minimize or eliminate flood damage.
(2) New and replacement water supply systems shall be designed to minimize or eliminate infiltration of floodwaters into the systems.
(3) New and replacement sanitary sewage systems shall be designed to minimize or eliminate infiltration of floodwaters into the systems and discharges from the systems into floodwaters.
(4) On-site waste disposal systems shall be located to avoid impairment to them or contamination from them during flooding.

C.7.4 Storm Drainage. Storm drainage shall be designed to convey the flow of surface waters so as to minimize or eliminate damage to persons or property.

C.7.5 Streets and Sidewalks. Streets and sidewalks shall be designed to minimize the potential for increasing or aggravating flood levels.

C.8 Tanks.

C.8.1 Underground Tanks. Underground tanks in flood hazard areas shall be designed, constructed, and installed to prevent flotation, collapse, or lateral movement resulting from hydrostatic load when empty, including the effects of buoyancy, during conditions of the design flood.

C.8.2 Aboveground Tanks. Aboveground tanks in flood hazard areas shall be elevated to or above the design flood elevation or shall be designed, constructed, and installed to prevent flotation, collapse, or lateral movement resulting from hydrodynamic and hydrostatic loads when empty, including the effects of buoyancy, during conditions of the design flood.

C.8.3 Tank Inlets and Vents. In flood hazard areas, tank inlets, manhole openings, outlets, vents, and other openings shall comply with the following:

(1) They shall be located at or above the design flood elevation or fitted with covers designed to prevent the inflow of floodwater or outflow of the contents of the tanks during conditions of the design flood.
(2) They shall be anchored to prevent lateral movement resulting from hydrodynamic and hydrostatic loads, including the effects of buoyancy, during conditions of the design flood.

C.9 Recreational Vehicles.

C.9.1 Temporary Placement. Recreational vehicles in flood hazard areas shall be fully licensed and ready for highway use or shall be placed on a site for less than 180 consecutive days.

C.9.2 Permanent Placement. Recreational vehicles that are not fully licensed and ready for highway use, or that are to be placed on a site for 180 consecutive days or more, shall meet the requirements of 39.14 for manufactured homes.

Annex D Construction Types and Enhanced Fire Compartment Requirements

Information in this annex is intended to be used as an alternate for application of the controls over building construction type, height, and area.

D.1 General.

D.1.1 Enhanced Fire (EF) Compartments. Enhanced fire (EF) compartments or parts of EF compartments classified in a specific occupancy group or groups because of their use shall be limited to the types of construction specified in Section D.2 and shall comply with the height and area requirements specified in Sections D.4 through D.7.

D.1.2 Mechanical, Plumbing, and Electrical Components. Combustible mechanical, plumbing, and electrical components installed in accordance with the applicable code shall be permitted in all types of construction.

D.1.3 Location and Property. Buildings or parts of buildings shall be subject to the requirements of Section D.3 for protection of exterior walls and for openings in exterior walls as determined by location on property.

D.1.4 Terminology. Where the term *limited-combustible* is used in this *Code*, it shall also include *noncombustible*.

D.1.5 Fire Department Access. [**1:**18.2]

D.1.5.1 Fire department access and fire department access roads shall be provided and maintained in accordance with D.1.5. [**1:**18.2.1]

D.1.5.2 Fire Department Access Roads. [**1:**18.2.3]

Copyright National Fire Protection Association
Provided by IHS under license with NFPA
No reproduction or networking permitted without license from IHS
Not for Resale

D.1.5.2.1 Required Access.

D.1.5.2.1.1 Approved fire department access roads shall be provided in accordance with D.1.5 for every facility, building, or portion of a building hereafter constructed or relocated. [**1:**18.2.3.1.1]

D.1.5.2.1.2 When not more than two one- and two-family dwellings or private garages, carports, sheds, and agricultural buildings, and detached buildings or structures 400 ft^2 (37 m^2) or less are present, the requirements of D.1.5.2.1 and D.1.5.2.5 shall be permitted to be modified by the authority having jurisdiction. [**1:**18.2.3.1.3]

D.1.5.2.1.3 When fire department access roads cannot be installed due to location on property, topography, waterways, nonnegotiable grades, or other similar conditions, the authority having jurisdiction shall be authorized to require additional fire protection features. [**1:**18.2.3.1.4]

D.1.5.2.2 Access to Building.

D.1.5.2.2.1 A fire department access road shall extend to within 50 ft (15 m) of at least one exterior door that can be opened from the outside and that provides access to the interior of the building. [**1:**18.2.3.2.1]

D.1.5.2.3 Additional Requirements.

D.1.5.2.3.1 Fire department access roads shall be provided such that any portion of the facility or any portion of an exterior wall of the first story of the building is located not more than 150 ft (46 m) from fire department access roads as measured by an approved route around the exterior of the building or facility. [**1:**18.2.3.2.2]

D.1.5.2.3.2 When buildings are protected throughout with an approved automatic fire sprinkler system that is installed in accordance with NFPA 13, *Standard for the Installation of Sprinkler Systems*, NFPA 13D, *Standard for the Installation of Sprinkler Systems in One- and Two-Family Dwellings and Manufactured Homes*, or NFPA 13R, *Standard for the Installation of Sprinkler Systems in Residential Occupancies up to and Including Four Stories in Height*, the distance shall be permitted to be increased to 450 ft (137 m). [**1:**18.2.3.2.2.1]

D.1.5.2.4 Multiple Access Roads. More than one fire department access road shall be provided when it is determined by the authority having jurisdiction that access by a single road could be impaired by vehicle congestion, condition of terrain, climatic conditions, or other factors that could limit access. [**1:**18.2.3.3]

D.1.5.2.5 Specifications. [**1:**18.2.3.4]

D.1.5.2.5.1 Dimensions. [**1:**18.2.3.4.1]

(A) Fire department access roads shall have an unobstructed width of not less than 20 ft (6100 mm). [**1:**18.2.3.4.1.1]

(B) Fire department access roads shall have an unobstructed vertical clearance of not less than 13 ft 6 in. (4.1 m). [**1:**18.2.3.4.1.2]

(C) Vertical clearance shall be permitted to be reduced, provided such reduction does not impair access by fire apparatus, and approved signs are installed and maintained indicating the established vertical clearance when approved. [**1:**18.2.3.4.1.2.1]

(D) Vertical clearances or widths shall be increased when vertical clearances or widths are not adequate to accommodate fire apparatus. [**1:**18.2.3.4.1.2.2]

D.1.5.2.5.2 Surface. Fire department access roads shall be designed and maintained to support the imposed loads of fire apparatus and shall be provided with an all-weather driving surface. [**1:**18.2.3.4.2]

D.1.5.2.5.3 Turning Radius.

(A) The turning radius of a fire department access road shall be as approved by the authority having jurisdiction. [**1:**18.2.3.4.3.1]

(B) Turns in fire department access roads shall maintain the minimum road width.

D.1.5.2.5.4 Dead Ends. Dead-end fire department access roads in excess of 150 ft (46 m) in length shall be provided with approved provisions for the fire apparatus to turn around. [**1:**18.2.3.4.4]

D.1.5.2.5.5 Bridges. [**1:**18.2.3.4.5]

(A) When a bridge is required to be used as part of a fire department access road, it shall be constructed and maintained in accordance with nationally recognized standards. [**1:**18.2.3.4.5.1]

(B) The bridge shall be designed for a live load sufficient to carry the imposed loads of fire apparatus. [**1:**18.2.3.4.5.2]

(C) Vehicle load limits shall be posted at both entrances to bridges where required by the authority having jurisdiction. [**1:**18.2.3.4.5.3]

D.1.5.2.5.6 Grade. [**1:**18.2.3.4.6]

(A) The gradient for a fire department access road shall not exceed the maximum approved. [**1:**18.2.3.4.6.1]

(B) The angle of approach and departure for any means of fire department access shall not exceed 1 ft drop in 20 ft (305 mm drop in 6100 mm) or the design limitations of the fire apparatus of the fire department, and shall be subject to approval by the authority having jurisdiction. [**1:**18.2.3.4.6.2]

Note: The design limits of fire department apparatus should take into account mutual aid companies and other response agencies that might respond to emergencies. [**1:** A.18.2.3.4.6.2]

D.1.5.2.5.7 Marking of Fire Apparatus Access Road. Where required by the authority having jurisdiction, approved signs or other approved notices shall be provided and maintained to identify fire department access roads or to prohibit the obstruction thereof or both. [**1:**18.2.3.5.1]

D.1.6 Definitions. The definitions contained in this annex shall apply to the terms used in this *Code*. Where terms are not included, common usage of the terms shall apply.

D.1.6.1 Building. Single or multiple EF compartments that are not separated by open yards or fire walls.

D.1.6.2 Enhanced Fire (EF) Compartment. The space enclosed by exterior walls, roof assembly, fire walls, floors on grade, enhanced fire compartment (EFC) barriers, or any combination thereof.

D.1.6.3 Enhanced Fire Compartment (EFC) Barrier. The vertical or horizontal fire resistance–rated barrier separating EF compartments.

D.2 Construction Types.

D.2.1 General.

D.2.1.1 EF compartments shall be classified according to their type of construction, which shall be based upon one of

Copyright National Fire Protection Association
Provided by IHS under license with NFPA
No reproduction or networking permitted without license from IHS
Not for Resale

Table D.2.1.1(a) Fire Resistance Ratings for Type I Through Type V Construction (hr)

	Type I		Type II			Type III		Type IV	Type V	
	442	**332**	**222**	**111**	**000**	**211**	**200**	**2HH**	**111**	**000**
Exterior Bearing Walls[a]										
Supporting more than one floor, columns, or other bearing walls	4	3	2	1	0[b]	2	2	2	1	0[b]
Supporting one floor only	4	3	2	1	0[b]	2	2	2	1	0[b]
Supporting a roof only	4	3	1	1	0[b]	2	2	2	1	0[b]
Interior Bearing Walls										
Supporting more than one floor, columns, or other bearing walls	4	3	2	1	0	1	0	2	1	0
Supporting one floor only	3	2	2	1	0	1	0	1	1	0
Supporting roofs only	3	2	1	1	0	1	0	1	1	0
Columns										
Supporting more than one floor, columns, or other bearing walls	4	3	2	1	0	1	0	H	1	0
Supporting one floor only	3	2	2	1	0	1	0	H	1	0
Supporting roofs only	3	2	1	1	0	1	0	H	1	0
Beams, Girders, Trusses, and Arches										
Supporting more than one floor, columns, or other bearing walls	4	3	2	1	0	1	0	H	1	0
Supporting one floor only	2	2	2	1	0	1	0	H	1	0
Supporting roofs only	2	2	1	1	0	1	0	H	1	0
Floor-Ceiling Assemblies	2	2	2	1	0	1	0	H	1	0
Roof-Ceiling Assemblies	2	1½	1	1	0	1	0	H	1	0
Interior Nonbearing Walls	0	0	0	0	0	0	0	0	0	0
Exterior Nonbearing Walls[c]	0[b]	0[b]	0[b]	0[b]	0[b]	0[b]	0[b]	0[b]	0[b]	0[b]

H: Heavy timber members *(see text for requirements).*
[a]See D.3.2.1.
[b]See Section D.3.
[c]See D.2.3.2.12, D.2.4.2.3, and D.2.5.6.8.

five basic types of construction designated as Type I, Type II, Type III, Type IV, and Type V, with fire resistance ratings not less than those specified in Table D.2.1.1(a) and D.2.3 through D.2.6 and with fire resistance ratings meeting the requirements of D.2.7.

Note: The system of designating types of construction also includes a specific breakdown of the types of construction through the use of arabic numbers. These arabic numbers follow the roman numeral notation where identifying a type of construction [for example, Type I (442), Type II (111), Type III (200)] and indicate the fire resistance rating requirements for certain structural elements as follows:

(1) First arabic number — exterior bearing walls
(2) Second arabic number — columns, beams, girders, trusses and arches, supporting bearing walls, columns, or loads from more than one floor
(3) Third arabic number — floor construction

Note: Table D.2.1.1(b) provides a comparison of the similar types of construction for various model building codes.

D.2.1.2 Where two or more types of construction are used in the same EF compartment, all attached EF compartments not separated by a fire wall shall be classified as the least type of construction and shall be subject to the requirements for that type, except as permitted by other provisions of this *Code*.

D.2.1.3 Requirements for specific materials, types of construction, and fire protection shall be minimum requirements, and any material, type of construction, or fire protection affording safety or a fire resistance rating equal to or greater than that provided in this *Code* shall be permitted.

D.2.1.4 Materials shall be in accordance with all of the following, except as modified by any special requirements in D.2.3:

(1) Chapter 41, Concrete
(2) Chapter 42, Aluminum
(3) Chapter 43, Masonry
(4) Chapter 44, Steel
(5) Chapter 45, Wood
(6) Chapter 46, Glass and Glazing
(7) Chapter 47, Gypsum Board, Lath, and Plaster
(8) Chapter 48, Plastics

Copyright National Fire Protection Association
Provided by IHS under license with NFPA
No reproduction or networking permitted without license from IHS
Not for Resale

Table D.2.1.1(b) Cross-Reference of Building Construction Types

NFPA 5000	I(442)	I(332)	II(222)	II(111)	II(000)	III(211)	III(200)	IV(2HH)	V(111)	V(000)
UBC	—	I FR	II FR	II 1 hr	II N	III 1 hr	III N	IV HT	V 1 hr	VN
B/NBC	1A	1B	2A	2B	2C	3A	3B	4	5A	5B
SBC	I	II	—	IV 1 hr	IV UNP	V 1 hr	V UNP	III	VI 1 hr	VI UNP
IBC	—	IA	IB	IIA	IIB	IIIA	IIIB	IV	VA	VB

UBC: *Uniform Building Code.*
FR: Fire rated.
N: Nonsprinklered.
HT: Heavy timber.
B/NBC: *National Building Code.*
SBC: *Standard Building Code.*
UNP: Unprotected.
IBC: *International Building Code.*

D.2.2 Reserved.

D.2.3 Type I (442 or 332) and Type II (222, 111, or 000) Construction.

D.2.3.1 Type I and Type II Construction. Type I (442 or 332) and Type II (222, 111, or 000) construction shall be those types in which the fire walls, structural elements, walls, arches, floors, and roofs are of approved noncombustible or limited-combustible materials.

D.2.3.2 Special Requirements — Type I and Type II Construction. The special requirements in D.2.3.2.1 through D.2.3.2.20 shall apply to Type I and Type II construction.

D.2.3.2.1 Wood Sleepers. Where wood sleepers are used for installing wood flooring on noncombustible floors, the furring space shall be filled with noncombustible or limited-combustible material or shall be fireblocked so that there will be no open space exceeding 100 ft^2 (9 m^2) in area under the flooring.

D.2.3.2.2 Sleeper Space. The furring spaces created by sleepers in D.2.3.2.1 shall be filled solidly under all permanent partitions to prevent spread of fire under the flooring.

D.2.3.2.3 Mezzanine Floors in Type I and Type II (222 or 111) Construction. Mezzanine floors in Type I and Type II (222 or 111) construction shall have a fire resistance rating of not less than 1 hour.

D.2.3.2.4 Mezzanine Floors in Type II (000) Construction. Mezzanine floors in Type II (000) construction shall not be required to have a fire resistance rating.

D.2.3.2.5 Platforms. Permanent platforms shall be constructed of noncombustible or limited-combustible materials.

D.2.3.2.6 Space Beneath Platforms. Where the space beneath any permanent platform is used for storage or any purpose other than equipment, wiring, or plumbing, the floor construction shall have a fire resistance rating not less than 1 hour.

D.2.3.2.7 Fire-Retardant-Treated Wood Platforms. Fire-retardant-treated wood shall be permitted for permanent platforms that do not exceed 3000 ft^2 (278 m^2) in area, that are not more than 30 in. (760 mm) above the floor, and that do not occupy more than 50 percent of the floor area of the room or space in which they are located.

D.2.3.2.8 Roofs 20 ft (6100 mm) or More Above Any Floor. In occupancies other than mercantile, industrial, or storage occupancies with ordinary or high hazard contents, or other occupancies with high hazard contents exceeding the maximum allowable quantities per control area as set forth in 34.1.3, the fire-resistive protection of the roof-ceiling assembly required by Table D.2.1.1(a) shall not be required where every part of the roof-ceiling assembly is 20 ft (6100 mm) or more above any floor immediately below.

D.2.3.2.9 Fire-Retardant-Treated Wood Roof.

D.2.3.2.9.1 Fire retardant-treated wood members shall be permitted to be used for unprotected members specified in D.2.3.2.8.

D.2.3.2.9.2 Fire-retardant-treated wood shall be permitted for roof construction, including girders and trusses, under the following conditions:

(1) In Type II buildings
(2) In Type I buildings of two stories or less
(3) In Type I buildings over two stories where the vertical distance from the floor to the roof is 20 ft (6100 mm) or more

D.2.3.2.10 Heavy Timber Structural Elements. In all occupancies, heavy timber structural elements shall be permitted to be used for the roof construction where a 1-hour or less fire resistance rating or less is required.

D.2.3.2.11 Interior Nonbearing Walls.

D.2.3.2.11.1 Interior nonbearing walls shall be constructed of noncombustible or limited-combustible materials.

D.2.3.2.11.2 Interior nonbearing walls required to have a fire resistance rating of 2 hours or less shall be permitted to be fire-retardant-treated wood enclosed within noncombustible or limited-combustible materials, provided that such walls are not used as shaft enclosures.

D.2.3.2.12 Exterior Nonbearing Walls. Nonbearing exterior walls shall be constructed of noncombustible materials, limited-combustible materials, or materials specified in D.2.3.2.12.1 or D.2.3.2.12.2.

D.2.3.2.12.1 Fire-retardant-treated wood shall be permitted in exterior nonbearing walls where such walls are not required to have fire resistance ratings.

--`,,```,,,,````-`-`,,`,,`,`,,`---
Copyright National Fire Protection Association
Provided by IHS under license with NFPA
No reproduction or networking permitted without license from IHS
Not for Resale

D.2.3.2.12.2 Exterior nonbearing walls tested in accordance with and meeting the conditions of acceptance of NFPA 285, *Standard Fire Test Method for Evaluation of Fire Propagation Characteristics of Exterior Non-Load-Bearing Wall Assemblies Containing Combustible Components*, shall be permitted.

D.2.3.2.13 Combustible Materials. The following combustible materials shall be permitted to be used:

(1) Foam plastic insulation complying with Section 48.4
(2) Metal composite material complying with Section 37.4
(3) Thermal and acoustical insulation, other than foam plastic, complying with Section 8.16
(4) Interior floor finish and interior finish, trim, and millwork, such as doors, door frames, window sashes, and window frames
(5) Light-transmitting plastic complying with Sections 38.11 and 48.7
(6) Class A, Class B, or Class C roof coverings
(7) Blocking

D.2.3.2.14 Ceiling and Raised Floor Plenums. The space between the top of the finished ceiling and the underside of the floor or roof above and the space between the top of the finished floor and the underside of a raised floor shall be permitted to be used to supply air to the occupied area or return and exhaust air from the occupied area, provided that the requirements of D.2.3.2.15 through D.2.3.2.20 are met.

D.2.3.2.15 Plenum Materials Combustibility. Materials exposed to the airflow shall be noncombustible or limited combustible and have a maximum smoke developed index of 50 or comply with the following. [**90A:** 4.3.10.2.6]

D.2.3.2.15.1 Electrical wires and cables and optical fiber cables shall be listed as noncombustible or limited combustible and have a maximum smoke developed index of 50 or shall be listed as having a maximum peak optical density of 0.5 or less, an average optical density of 0.15 or less, and a maximum flame spread distance of 1.5 m (5 ft) or less when tested in accordance with NFPA 262, *Standard Method of Test for Flame Travel and Smoke of Wires and Cables for Use in Air-Handling Spaces*. [**90A:** 4.3.10.2.6.1]

D.2.3.2.15.2 Pneumatic tubing for control systems shall be listed as having a maximum peak optical density of 0.5 or less, an average optical density of 0.15 or less, and a maximum flame spread distance of 1.5 m (5 ft) or less when tested in accordance with UL 1820, *Standard for Fire Test of Pneumatic Tubing for Flame and Smoke Characteristics*. [**90A:** 4.3.10.2.6.2]

D.2.3.2.15.3 Nonferrous fire sprinkler piping shall be listed as having a maximum peak optical density of 0.5 or less, an average optical density of 0.15 or less, and a maximum flame spread distance of 1.5 m (5 ft) or less when tested in accordance with UL 1887, *Standard for Fire Test of Plastic Sprinkler Pipe for Visible Flame and Smoke Characteristics*. [**90A:** 4.3.10.2.6.3]

D.2.3.2.15.4 Optical fiber and communication raceways shall be listed as having a maximum peak optical density of 0.5 or less, an average optical density of 0.15 or less, and a maximum flame spread distance of 1.5 m (5 ft) or less when tested in accordance with UL 2024, *Standard for Optical-Fiber Cable Raceway*. [**90A:** 4.3.10.2.6.4]

D.2.3.2.15.5 Loudspeakers and recessed lighting fixtures, including their assemblies and accessories, shall be permitted in the ceiling cavity plenum where listed as having a maximum peak optical density of 0.5 or less, an average optical density of 0.15 or less, and a peak heat release rate of 100 kW or less when tested in accordance with UL 2043, *Standard for Fire Test for Heat and Visible Smoke Release for Discrete Products and Their Accessories Installed in Air-Handling Spaces*. [**90A:** 4.3.10.2.6.5]

D.2.3.2.15.6 Supplementary materials for air distribution systems shall be permitted when complying with the provisions of 4.3.3 of NFPA 90A, *Standard for the Installation of Air-Conditioning and Ventilating Systems*. [**90A:** 4.3.10.2.6.6]

D.2.3.2.15.7 Smoke detectors shall not be required to meet the provisions of D.2.3.2.15. [**90A:** 4.3.10.2.6.7]

D.2.3.2.16 Plenum Fire Stopping. The integrity of the fire stopping for penetrations shall be maintained.

D.2.3.2.17 Plenum Light Diffusers. Light diffusers, other than those made of metal or glass, used in air-handling light fixtures shall be listed and marked as follows:

Fixture Light Diffusers for Air-Handling Fixtures

D.2.3.2.18 Plenum Air Temperature. The temperature of air delivered to plenums shall not exceed 250°F (121°C).

D.2.3.2.19 Plenum Materials Exposure. Materials used in the construction of a plenum shall be suitable for continuous exposure to the temperature and humidity conditions of the environmental air in the plenum.

D.2.3.2.20 Ceiling Plenum Tested Assembly. Where the plenum is a part of a floor-ceiling or roof-ceiling assembly that has been tested or investigated and assigned a fire resistance rating of 1 hour or more, and the assembly contains air ducts and openings for air ducts, all the materials and the construction of the assembly, including the air duct materials and the size and protection of the openings, shall conform with the design of the fire resistance–rated assembly, as tested in accordance with NFPA 251, *Standard Methods of Tests of Fire Resistance of Building Construction and Materials*, ASTM E 119, *Standard Test Methods for Fire Tests of Building Construction and Materials*, or UL 263, *Standard for Fire Tests of Building Construction and Materials*.

D.2.4 Type III (211 or 200) Construction.

D.2.4.1 Type III Construction. Type III (211 or 200) construction shall be that type in which exterior walls and structural elements that are portions of exterior walls are of approved noncombustible or limited-combustible materials, and in which fire walls, interior structural elements, walls, arches, floors, and roofs are entirely or partially of wood of smaller dimensions than required for Type IV construction or are of approved noncombustible, limited-combustible, or other approved combustible materials.

D.2.4.2 Special Requirements — Type III Construction. The special requirements in D.2.4.2.1 through D.2.4.2.3 shall apply to Type III construction.

D.2.4.2.1 Fire-Retardant-Treated Wood. Approved fire-retardant-treated wood framing shall be permitted within the assembly of exterior walls having a required fire resistance rating of 2 hours or less and a horizontal separation of not less than 60 in. (1525 mm), provided that the fire resistance rating is maintained and the exposed outer and inner faces of such walls are constructed of limited-combustible or noncombustible materials.

D.2.4.2.2 Heavy Timber. Wood columns and arches conforming to heavy timber sizes shall be permitted where exterior walls are required to have a 1-hour fire resistance rating or less.

Copyright National Fire Protection Association
Provided by IHS under license with NFPA
No reproduction or networking permitted without license from IHS
Not for Resale

D.2.4.2.3 Exterior Nonbearing Walls. Exterior nonbearing walls tested in accordance with, and meeting the conditions of acceptance of, NFPA 285 shall be permitted.

D.2.5 Type IV (2HH) Construction.

D.2.5.1 Type IV Construction. Type IV (2HH) construction shall be that type in which fire walls, exterior walls, and interior bearing walls and structural elements that are portions of such walls are of approved noncombustible or limited-combustible materials. Other interior structural elements, arches, floors, and roofs shall be of solid or laminated wood without concealed spaces and shall comply with the allowable dimensions of D.2.5.5.

D.2.5.2 Exterior Wall Separation. Exterior walls greater than 30 ft (9100 mm) from the property line shall be permitted to be of heavy timber construction, provided that the 2-hour fire resistance rating required by Table D.2.1.1(a) is maintained and such walls contain no combustible concealed spaces.

D.2.5.3 Interior Columns, Arches, Beams, Girders, and Trusses. Interior columns, arches, beams, girders, and trusses of approved materials other than wood shall be permitted, provided that they are protected to provide a fire resistance rating of not less than 1 hour.

D.2.5.4 Concealed Space. Certain concealed spaces shall be permitted in accordance with D.2.5.5.3.4.

D.2.5.5 Type IV (2HH) Allowable Dimensions. All dimensions in D.2.5.5 shall be considered nominal.

D.2.5.5.1 Columns.

D.2.5.5.1.1 Wood columns supporting floor loads shall be not less than 8 in. (200 mm) in any dimension.

D.2.5.5.1.2 Wood columns supporting only roof loads shall be not less than 6 in. (150 mm) in width and not less than 8 in. (200 mm) in depth.

D.2.5.5.2 Beams.

D.2.5.5.2.1 Wood beams and girders supporting floor loads shall be not less than 6 in. (150 mm) in width and not less than 10 in. (250 mm) in depth.

D.2.5.5.2.2 Wood beams and girders and other roof framing supporting roof loads only shall be not less than 4 in. (100 mm) in width and not less than 6 in. (150 mm) in depth.

D.2.5.5.3 Arches.

D.2.5.5.3.1 Framed or glued laminated arches that spring from grade or the floor line and timber trusses that support floor loads shall be not less than 8 in. (200 mm) in width or depth.

D.2.5.5.3.2 Framed or glued laminated arches for roof construction that spring from grade or the floor line and do not support floor loads shall have members not less than 6 in. (150 mm) in width and not less than 8 in. (200 mm) in depth for the lower half of the member height and not less than 6 in. (150 mm) in depth for the upper half of the member height.

D.2.5.5.3.3 Framed or glued laminated arches for roof construction that spring from the top of walls or wall abutments, and timber trusses that do not support floor loads, shall have members not less than 4 in. (100 mm) in width and not less than 6 in. (150 mm) in depth.

D.2.5.5.3.4 Spaced members shall be permitted to be composed of two or more pieces not less than 3 in. (75 mm) in thickness where blocked solidly throughout their intervening spaces or where such spaces are tightly closed by a continuous wood cover plate not less than 2 in. (50 mm) in thickness that is secured to the underside of the members.

D.2.5.5.4 Splice Plates. Splice plates shall be not less than 3 in. (75 mm) in thickness.

D.2.5.5.5 Floors. Floors shall be constructed in accordance with one of the following:

(1) They shall be constructed of spline or tongue-and-groove plank not less than 3 in. (75 mm) in thickness that is covered with 1 in. (25 mm) tongue-and-groove flooring, laid crosswise or diagonally to the plank, or with ½ in. (13 mm) wood structural panel.
(2) They shall be constructed of laminated planks not less than 4 in. (100 mm) in width, set close together on edge, spiked at intervals of 18 in. (460 mm), and covered with 1 in. (25 mm) tongue-and-groove flooring, laid crosswise or diagonally to the plank, or with ½ in. (13 mm) wood structural panel

D.2.5.5.6 Roof Decks. Roof decks shall be constructed of one of the following:

(1) Spline or tongue-and-groove plank not less than 2 in. (50 mm) in thickness
(2) Laminated planks not less than 3 in. (75 mm) in width, set close together on edge, and laid as required for floors
(3) 1⅛ in. (29 mm) thick interior wood structural panel (exterior glue)
(4) Approved noncombustible or limited-combustible materials of equivalent fire durability

D.2.5.6 Special Requirements — Type IV Construction. The special requirements in D.2.5.6.1 through D.2.5.6.8 shall apply to Type IV construction.

D.2.5.6.1 Structural Elements. Structural elements shall be of heavy timber members (sawn or glued-laminated) or of fire resistance–rated construction as set forth in Table D.2.1.1(a) where materials other than heavy timber are used.

D.2.5.6.2 Columns, Arches, Beams, and Roof Decking. Where horizontal separation of 20 ft (6100 mm) or more is provided, wood columns, arches, beams, and roof decking conforming to the requirements for heavy timber in D.2.5.5 shall be permitted to be used on the exterior of the building.

D.2.5.6.3 Partitions. Permanent partitions shall be permitted to be of solid wood construction formed by not less than two layers of matched boards of 1 in. (25 mm) nominal thickness or of 1-hour fire resistance–rated construction as set forth in Table D.2.1.1(a).

D.2.5.6.4 Floors. Floors shall be permitted to be of heavy timber, masonry, concrete, wood, or steel and shall be constructed as required in Chapter 8.

D.2.5.6.5 Roofs. Roofs of 1-hour fire resistance–rated construction shall be permitted.

D.2.5.6.6 Stairways.

D.2.5.6.6.1 Stairways shall be permitted to be constructed with wood treads and risers of not less than 2 in. (50 mm) nominal thickness.

--`,,```,,,,````-`-`,,`,,`,`,,`---

Copyright National Fire Protection Association
Provided by IHS under license with NFPA
No reproduction or networking permitted without license from IHS
Not for Resale

D.2.5.6.6.2 Where built-on, laminated, or plank inclines are required for floors, stairways shall be permitted to be 1 in. (25 mm) nominal thickness or shall be permitted to be constructed as required for buildings of Type I or Type II construction.

D.2.5.6.7 Exterior Walls. Approved fire-retardant-treated wood framing shall be permitted within the assembly of exterior walls having a required fire resistance rating of 2 hours or less and a horizontal separation of not less than 60 in. (1525 mm), provided that the fire resistance rating is maintained and the exposed outer and inner faces of such walls are constructed of limited-combustible or noncombustible materials.

D.2.5.6.8 Exterior Nonbearing Walls. Exterior nonbearing walls tested in accordance with, and meeting the conditions of, acceptance of NFPA 285 shall be permitted.

D.2.6 Type V (111 or 000) Construction. Type V (111 or 000) construction shall be that type in which structural elements, walls, arches, floors, and roofs are entirely or partially of wood or other approved material.

D.2.7 Fire Resistance Rating Requirements for Structural Elements.

D.2.7.1 Fire resistance protection shall be provided for structural elements as set forth in Annex D and other chapters of this *Code*.

D.2.7.2 Structural elements shall meet the requirements of D.2.7.2.1 through D.2.7.2.3.

D.2.7.2.1 Structural elements, floors, and bearing walls shall have a fire resistance rating not less than the fire resistance rating required for the structural element, bearing or nonbearing wall, floor, or roof they support.

D.2.7.2.2 Structural elements, floors, and bearing walls shall be required to have only the fire resistance rating required for the construction classification, provided that both of the following criteria are met:

(1) The structural elements support nonbearing wall or partition assemblies having a required fire resistance rating of 1 hour or less.
(2) The structural elements do not serve as exit enclosures, protection for vertical openings, or occupancy separations.

D.2.7.2.3 Structural elements such as girders, beams, trusses, and spandrels that have direct connections to columns carrying gravity loads and are essential to the stability of the building as a whole shall have a fire resistance rating not less than that of the columns to which they are connected.

D.2.7.3 Structural elements required to have a fire resistance rating and that support more than two floors, one floor and roof, a bearing wall, or a nonbearing wall more than two stories high shall be individually protected on all sides for their full length with materials providing the required fire resistance rating.

D.2.7.4 Structural elements, other than those specified in D.2.7.3, required to have a fire resistance rating shall be protected by individual encasement, membrane or ceiling protection in accordance with Section 8.6 or a combination of both.

D.2.7.5 In addition to the requirements of D.2.7.3 and D.2.7.4, columns shall meet the following requirements:

(1) Where columns require a fire resistance rating, the entire column, including its connections to beams or girders, shall be individually protected.
(2) Where the column extends through a ceiling, the fire-resistive protection provided for the column shall be continuous from the top of the floor through the ceiling space to the top of the column.

D.2.7.6 The required thickness and construction of fire-resistive materials or assemblies enclosing trusses shall be based on one of the following:

(1) Results of full-scale tests or combinations of tests on truss components
(2) Approved calculations based on the tests specified in D.2.7.6(1) to verify that the assembly is provided with the required fire resistance rating in accordance with 8.2.3

D.2.7.7 The fire resistance rating required for external structural elements located beyond the perimeter of the building floor area shall be permitted to be calculated by using analytical methods in accordance with the provisions set forth in 8.2.3.

D.2.7.8 Structural elements within exterior walls or located along the exterior perimeter of a building or structure shall have a fire resistance rating as required by Table D.2.1.1(a) for exterior bearing walls based on the type of construction.

D.2.7.9 Structural elements within an exterior wall located where openings are not permitted, or where protection of openings is required in accordance with D.3.5, shall have a fire resistance rating based on protection against exterior fire exposure as required for exterior bearing walls or the structural element, whichever requires the greater fire resistance rating.

D.2.7.10 The edges of lugs, brackets, rivets, and bolt heads attached to structural elements shall be permitted to extend to within 1 in. (25 mm) of the surface of the fire-resistive protection.

D.2.7.11 Conduits, pipes, or ducts shall not be embedded within the required fire-resistive protection of any structural elements requiring individual encasement to achieve the required fire resistance rating.

D.2.7.12 Fire-resistive materials covering columns required to have a fire resistance rating, where exposed to impact damage by moving vehicles, by handling of merchandise, or by other means, shall be protected from damage.

D.3 Exterior Walls.

D.3.1 General. Exterior walls shall be designed and constructed in accordance with Chapter 37 and Section D.3.

D.3.2 Fire Resistance Rating of Exterior Walls.

D.3.2.1 Exterior walls shall have a fire resistance rating based on Table D.2.1.1(a) and Table D.3.2.1, whichever is greater.

D.3.2.2 The fire resistance rating requirements of Table D.3.2.1 shall not apply to exterior walls of one- and two-family dwellings having a horizontal separation of more than 60 in. (1525 mm).

D.3.3 Continuity. Exterior walls required to be fire rated by Table D.3.2.1 because of horizontal separation shall be continuous from the foundation to not less than 30 in. (760 mm) above the roof, except where otherwise permitted by 37.1.3.1.

D.3.4 Horizontal Separation.

D.3.4.1 Measurement. Horizontal separation shall be measured at a 90-degree angle to the exterior wall.

Copyright National Fire Protection Association
Provided by IHS under license with NFPA
No reproduction or networking permitted without license from IHS
Not for Resale

Table D.3.2.1 Fire Resistance Rating for Exterior Walls (hr)

Occupancy Classification	Horizontal Separation ft (m)				Opening Protectives
	0 to 5 (0 to 1.5)	>5 to ≤10 (>1.5 to ≤3)	>10 to ≤30 (>3 to ≤9)	>30 (>9)	
Assembly, educational, day-care, health care, ambulatory health care, detention and correctional, residential, residential board and care, business, industrial, and storage occupancies with low hazard contents	1	1	0	0	See Table D.3.5(a).
Mercantile and industrial and storage occupancies with ordinary hazard contents	2	1	0	0	See Table D.3.5(b).
Industrial and storage occupancies with high hazard contents exceeding the maximum allowable quantities per control area as set forth in 34.1.3 and complying with Protection Level 1, Protection Level 2, or Protection Level 3	See Chapter 34 for minimum requirements.				
Industrial and storage occupancies with high hazard contents exceeding the maximum allowable quantities per control area as set forth in 34.1.3 and complying with Protection Level 4 or Protection Level 5	3	2	1	0	See Table D.3.5(b).

D.3.4.2 Imaginary Line.

D.3.4.2.1 Where two or more buildings are located on the same lot, the horizontal separation shall be measured from the exterior wall to an imaginary line drawn between the exterior walls of the adjacent buildings.

D.3.4.2.2 The imaginary line shall be located at a distance from the facing exterior wall of the adjacent building that is equal to the horizontal separation applicable for that wall based on its fire resistance rating and protection of openings.

D.3.4.3 Irregular Shaped Exterior Wall. Where the exterior wall is an irregular vertical shape, the following criteria shall be met:

(1) The horizontal separation shall be determined by measuring from a vertical plane that is located so that no portion of the exterior wall is between such vertical plane and the line to which the horizontal separation is measured.
(2) The area of openings shall be determined from the projection of the openings in the exterior wall onto the vertical plane.

D.3.5 Openings. Where an exterior wall is required to have a fire resistance rating as determined by Table D.3.2.1, the area of openings in exterior walls shall not exceed that permitted by Section D.3 and Table D.3.5(a) or Table D.3.5(b).

D.3.5.1 The area of unprotected openings in an exterior wall shall be the aggregate of unprotected openings expressed as a percentage of the area of the exterior wall.

D.3.5.2 Where required by Table D.3.2.1 to have a fire protection rating, opening protectives shall comply with the requirements of Section 8.7.

D.3.5.3 Where required by Table D.3.2.1 to have a fire protection rating, penetrations shall comply with the requirements of Section 8.8.

D.3.5.4 The area of an exterior wall shall be calculated as the length, edge to edge, of the exterior wall multiplied by the measurement from the finished ground level to the uppermost ceiling.

D.3.5.5 The area of unprotected openings permitted by Table D.3.5(a) and Table D.3.5(b) shall be permitted to be doubled under either of the following conditions:

(1) Where the building is protected throughout with an approved, electrically supervised automatic sprinkler system in accordance with NFPA 13, NFPA 13D, and NFPA 13R
(2) Where the openings are protected with a fire window assembly or other listed opening protective having a fire protection rating in accordance with Table D.3.5.5.

D.3.6 Light-Transmitting Plastics. Light-transmitting plastics used in exterior walls shall be in accordance with Section 48.7.

D.3.7 Lintels. Lintels used in exterior walls shall be in accordance with 37.1.2.

D.3.8 Parapets. Parapets used in exterior walls shall be in accordance with 37.1.3.

D.3.9 Vertical Separation of Exterior Openings. Vertical separation of exterior openings used in exterior walls shall be in accordance with 37.1.4.

D.3.10 Projections. Projections used in exterior walls shall be in accordance with Section 37.2.

D.3.11 Metal Composite Materials. Metal composite materials used in exterior walls shall be in accordance with Section 37.4.

Copyright National Fire Protection Association
Provided by IHS under license with NFPA
No reproduction or networking permitted without license from IHS
Not for Resale

Table D.3.5(a) Maximum Allowable Area of Unprotected Openings (percentage of exterior walls) — for Assembly, Educational, Day-Care, Health Care, Ambulatory Health Care, Detention and Correctional, Residential, Residential Board and Care, Business, Industrial, and Storage Occupancies with Low Hazard Contents as Required by Table D.3.2.1

Horizontal Separation (ft)	Maximum Area of Exposing Building Face (ft^2)																		
	100	150	200	250	300	400	500	600	700	800	900	1000	1500	2000	2500	3500	5000	10,000	≥20,000
0	0	0	0	0	0	0	0	0	0	0	0	0	0	0	0	0	0	0	0
3	0	0	0	0	0	0	0	0	0	0	0	0	0	0	0	0	0	0	0
4	9	8	8	8	8	7	7	7	7	7	7	7	7	7	7	7	7	7	7
5	12	11	10	9	9	9	8	8	8	8	8	8	7	7	7	7	7	7	7
6	18	15	13	12	11	10	10	9	9	9	9	8	8	8	8	7	7	7	7
7	25	20	17	15	14	12	11	11	10	10	10	9	9	8	8	8	8	7	7
8	33	25	21	19	17	15	14	13	12	11	11	11	10	9	9	8	8	7	7
9	43	32	27	23	21	18	16	15	14	13	12	12	11	10	9	9	8	8	7
10	55	40	33	28	25	21	19	17	16	15	14	13	12	11	10	9	9	8	7
>10	100	100	100	100	100	100	100	100	100	100	100	100	100	100	100	100	100	100	100

For SI units, 1 ft = 0.3048 m; 1 ft^2 = 0.093 m^2.

Table D.3.5(b) Maximum Allowable Area of Unprotected Openings (percentage of exterior wall) — for Mercantile, Industrial, and Storage Occupancies with Ordinary Hazard Contents and Industrial and Storage Occupancies with High Hazard Contents Exceeding the Maximum Allowable Quantity (MAQ) per Control Area as Set Forth in 34.1.3 and Complying with Protection Level 4 and Protection Level 5 as Required by Table D.3.2.1

Horizontal Separation (ft)	Maximum Area of Exposing Building Face (ft^2)																		
	100	150	200	250	300	400	500	600	700	800	900	1000	1500	2000	2500	3500	5000	10,000	≥20,000
0	0	0	0	0	0	0	0	0	0	0	0	0	0	0	0	0	0	0	0
3	0	0	0	0	0	0	0	0	0	0	0	0	0	0	0	0	0	0	0
4	4	4	4	4	4	4	4	4	4	4	4	4	4	4	4	4	4	4	4
5	6	5	5	5	5	4	4	4	4	4	4	4	4	4	4	4	4	4	4
6	9	7	7	6	6	5	5	5	5	4	4	4	4	4	4	4	4	4	4
7	12	10	8	8	7	6	6	5	5	5	5	5	4	4	4	4	4	4	4
8	17	13	11	9	9	7	7	6	6	6	5	5	5	4	4	4	4	4	4
9	21	16	13	12	10	9	8	7	7	7	6	6	5	5	5	4	4	4	4
10	27	20	16	14	12	11	9	8	8	7	7	7	6	5	5	5	4	4	4
15	69	48	38	31	27	21	18	16	14	13	12	12	9	8	7	6	6	5	4
20	100	91	70	57	48	38	31	27	24	22	20	18	16	12	10	9	7	6	5
25		100	100	91	77	59	48	41	36	32	29	27	20	16	14	11	9	7	5
30				100	100	86	59	46	52	46	42	38	27	22	18	15	12	8	6
>30						100	100	100	100	100	100	100	100	100	100	100	100	100	100

For SI units, 1 ft = 0.3048 m; 1 ft^2 = 0.093 m^2.

Table D.3.5.5 Minimum Fire Protection Ratings for Exterior Opening Protectives

Wall Fire Resistance Rating (hr)	Fire Protection Rating (hr)
2	1½
1	¾

D.3.12 Exterior Insulation and Finish Systems (EIFS). Exterior insulation and finish systems (EIFS) used in exterior walls shall be in accordance with Section 37.4.

D.4 Enhanced Fire (EF) Compartment.

D.4.1 General. The height of buildings and size of EF compartments, based on their intended occupancy and type of construction classification, shall be in accordance with Section D.4, Section D.6, or Section D.7.

D.4.2 EF Compartments. All buildings shall be constructed as a single EF compartment or shall be separated into more than one EF compartment.

D.4.2.1 EF Compartment Area. The maximum area of each EF compartment shall be determined by applying the area limits in Table D.4.2.1(a) or Table D.4.2.1(b) for each of the occupancies within the EF compartment.

Note: Although Table D.4.2.1(a) indicates that nonsprinklered compartments are not permitted for health care and large residential board and care occupancies, the table does provide a minimum fire resistance rating for the EFC barrier. This fire resistance rating could be permitted to be used where the compartment on either side of the EFC barrier is not sprinklered. An example of where the 2-hour fire resistance rating would apply is where an addition is being made to an existing nonsprinklered building.

D.4.2.1.1 The most restrictive area determined as specified in D.4.2.1 shall apply to the entire EF compartment.

Copyright National Fire Protection Association
Provided by IHS under license with NFPA
No reproduction or networking permitted without license from IHS
Not for Resale

Table D.4.2.1(a) Area and Separation Requirements for Nonsprinklered EF Compartments

Occupancy Class	Maximum EF Compartment Area		Fire Resistance Rating Separation (hr)
	ft^2	m^2	
Assembly > 1000	12,000	1116	1
Assembly > 300	12,000	1116	1
Assembly ≤ 300	12,000	1116	1
Assembly, outdoor	NL	NL	NA
Educational	12,000	1116	2
Day care	12,000	1116	2
Day-care homes	12,000	1116	1
Health care	NP	NP	2
Ambulatory health care	12,000	1116	1
Detention and correctional	12,000	1116	2
One- and two-family	12,000	1116	1
Lodging or rooming houses	12,000	1116	1
Hotels and dormitories	12,000	1116	1
Apartment	12,000	1116	1
Residential board and care, small	12,000	1116	2
Residential board and care, large	NP	NP	2
Mercantile:			
Ordinary hazard contents	12,000	1116	2
Bulk merchandising retail	12,000	1116	3
Business	12,000	1116	1
Industrial:			
Low hazard contents	20,000	1860	1
Ordinary hazard contents	12,000	1116	2
High hazard contents*	12,000	1116	3
Storage:			
Low hazard contents	20,000	1860	1
Ordinary hazard contents	12,000	1116	3
High hazard contents*	12,000	1116	4
Protection level:			
Protection Level 1	NP	NA	
Protection Level 2	NP	NA	
Protection Level 3	NP	NA	
Protection Level 4	NP	NA	
Protection Level 5	NP	NA	

NL: Not limited. NP: Not permitted. NA: Not applicable.
*Values are for high hazard contents not requiring Protection Level 1 through Protection Level 5.

D.4.2.1.2 The maximum EF compartment area values in Table D.4.2.1(b) shall be applied only where the EF compartment is protected throughout with an approved, electrically supervised automatic sprinkler system in accordance with NFPA 13.

D.4.2.2 EF Compartment Height.

D.4.2.2.1 Based on the occupancy(ies) within the EF compartment, the height of the highest story of an EF compartment shall not exceed the height in feet and stories allowed by Table D.4.2.2.1(a) or Table D.4.2.2.1(b), except as modified in D.4.3.

D.4.2.2.2 Table D.4.2.2.1(b) shall be applied only where the EF compartment is protected throughout with an approved, electrically supervised automatic sprinkler system in accordance with NFPA 13.

D.4.2.3 Separation.

D.4.2.3.1 Where a building has two or more EF compartments, each EF compartment shall be separated in accordance with Section D.5 by horizontal, vertical, or horizontal and vertical EFC barriers having a fire resistance rating determined by Table D.4.2.1(a) or Table D.4.2.1(b) for the occupancies being separated, except as modified in D.4.3.3.

D.4.2.3.2 The fire resistance rating requirements in Table D.4.2.1(b) shall be applied only where the EF compartment on each side of the EFC barrier is protected throughout with an approved, electrically supervised automatic sprinkler system in accordance with NFPA 13.

D.4.2.4 Access to Nonsprinklered EF Compartments.

D.4.2.4.1 Each nonsprinklered EF compartment shall be provided with a fire department access road.

D.4.2.4.2 The fire department access road shall be located a minimum of 50 ft (15 m), measured horizontally, from an access opening in the exterior wall of the EF compartment.

D.4.2.5 Number of EF Compartments. The number of EF compartments in a building shall be limited in accordance with D.4.2.5.

Copyright National Fire Protection Association
Provided by IHS under license with NFPA
No reproduction or networking permitted without license from IHS
Not for Resale

Table D.4.2.1(b) Area and Separation Requirements for Sprinklered EF Compartments

Occupancy Class	Maximum EF Compartment Area		Fire Resistance Rating Separation (hr)
	ft^2	m^2	
Assembly > 1000	60,000	5,580	1
Assembly > 300	60,000	5,580	1
Assembly ≤ 300	60,000	5,580	1
Assembly, outdoor	60,000	5,580	NA
Educational	54,000	5,022	1
Day care	54,000	5,022	1
Day-care homes	54,000	5,022	1
Health care	60,000	5,580	1
Ambulatory health care	60,000	5,580	1
Detention and correctional	60,000	5,580	1
One- and two-family	24,000	2,232	1
Lodging or rooming houses	66,000	6,138	1
Hotels and dormitories	90,000	8,370	1
Apartment	60,000	5,580	1
Residential board and care, small	60,000	5,580	1
Residential board and care, large	60,000	5,580	1
Mercantile:			
Ordinary hazard contents	72,000	6,696	2
Bulk merchandising retail	72,000	6,696	3
Business	108,000	10,044	1
Industrial:			
Low hazard contents	70,000	6,510	1
Ordinary hazard contents	42,000	3,906	2
High hazard contents *(See Note 1)*	42,000	3,906	3
Storage:			
Low hazard contents	100,000	9,300	1
Ordinary hazard contents	60,000	5,580	3
High hazard contents *(See Note 1)*	60,000	5,580	4
Protection level:			
Protection Level 1	12,000	1,116	See Note 2.
Protection Level 2	42,000	3,906	3
Protection Level 3	42,000	3,906	3
Protection Level 4	See Note 3.	See Note 3.	See Note 3.
Protection Level 5	60,000	5,580	2

NA: Not applicable.

Notes:

(1) Values are for high hazard contents not requiring Protection Level 1 through Protection Level 5.

(2) Maximum one compartment.

(3) Use value for appropriate occupancy class. For industrial or storage occupancies, use values for ordinary hazards.

D.4.2.5.1 General. In other than buildings requiring Protection Level 1, the maximum number of EF compartments shall be limited in accordance with Table D.4.2.5.1, except as permitted in D.4.2.5.2.

D.4.2.5.1.1 Application of Table D.4.2.5.1.

(A) The allowable number of stories for use in Table D.4.2.5.1 shall be based on the allowable number of stories specified in Table D.4.2.2.1(a) for nonsprinklered buildings or Table D.4.2.2.1(b) for sprinklered buildings.

(B) For occupancies in Table D.4.2.2.1(a) or Table D.4.2.2.1(b) in which the number of stories is not limited, the allowable number of stories for use in Table D.4.2.5.1 shall be determined by dividing the allowable height in feet from Table D.4.2.2.1(a) or Table D.4.2.2.1(b), based on the type of construction, by the following:

(1) 20 for industrial and storage occupancies
(2) 15 for mercantile occupancies
(3) 12 for business and educational occupancies
(4) 10 for all other occupancies

Note: Quotients that are not whole numbers are permitted to be rounded in the traditional fashion (that is, rounded down if less than 0.5, and rounded up if equal to or greater than 0.5).

D.4.2.5.1.2 Buildings with Mixed Occupancies. Where a building has two or more occupancies, the number of EF compartments shall not exceed that permitted for the occupancy allowed to have the least number of EF compartments.

D.4.2.5.2 Unlimited Number of EF Compartments. In buildings of Type I or Type II (222) construction, for occupancies other than those with high hazard contents requiring Protection Level 1, Protection Level 2, Protection Level 3, Protection Level 4, or Protection Level 5, the number of EF compartments shall not be limited.

Copyright National Fire Protection Association
Provided by IHS under license with NFPA
No reproduction or networking permitted without license from IHS
Not for Resale

Table D.4.2.2.1(a) Allowable Height in Feet and Stories — Nonsprinklered

Occupancy Class	I (442)	I (332)	II (222)	II (111)	II (000)	III (211)	III (200)	IV (2HH)	V (111)	V (000)
Maximum Height (ft)	**NL**	**NL**	**160**	**65**	**55**	**65**	**55**	**65**	**50**	**40**
Assembly > 1000	4	4	4	3	NP	2	NP	2	2	NP
Assembly > 300	4	4	4	3	1	2	1	2	2	1
Assembly ≤ 300	7	7	7	3	1	3	1	3	3	1
Assembly, outdoor	NL	NL	NL	NL	NL	3	1	3	3	1
Day care	2	2	2	1	1	1	1	1	1	1
Health care	NP	NP	NP	NP	NP	NP	NP	NP	NP	NP
Ambulatory health care	7	7	7	7	1	7	1	7	7	1
Detention and correctional	7	7	7	2	NP	2	NP	2	2	NP
Residential board and care, large	NP	NP	NP	NP	NP	NP	NP	NP	NP	NP
Educational Day-care homes One- and two-family Lodging or rooming houses Hotels and dormitories Apartment Residential board and care, small Mercantile Business Industrial Storage	NL	NL	NL	NL	NL	NL	NL	NL	NL	NL
Protection level: Protection Level 1 Protection Level 2 Protection Level 3 Protection Level 4 Protection Level 5	NP	NP	NP	NP	NP	NP	NP	NP	NP	NP

For SI units, 1 ft = 0.3048 m.
NP: Not permitted. NL: Not limited.

D.4.2.5.3 Protection Level 1. Not more than one EF compartment shall be permitted in buildings requiring Protection Level 1.

D.4.3 Special Requirements. The special requirements in D.4.3.1 through D.4.3.3 shall apply to EF compartments.

D.4.3.1 Towers, Spires, Steeples, and Other Architectural Embellishments. Towers, spires, steeples, and other architectural embellishments erected as part of a structure and not used for habitation or storage shall be of materials consistent with the required type of construction and shall meet the requirements of D.4.3.1.1 and D.4.3.1.2.

D.4.3.1.1 Towers, spires, steeples, and other architectural embellishments shall not be limited in height where constructed entirely of noncombustible materials.

D.4.3.1.2 Towers, spires, and steeples shall extend not more than 20 ft (6100 mm) above the height limit permitted in Table D.4.2.2.1(a) or Table D.4.2.2.1(b) where constructed of combustible materials.

D.4.3.2 Underground Buildings. All structural members up to and including the floor of the lowest level of discharge of underground buildings more than 30 ft (9100 mm) high or more than one level below the lowest level of exit discharge shall be Type I or Type II (222) construction.

D.4.3.3 Unlimited Area EF Compartment. The area of an EF compartment shall not be limited where the requirements of D.4.3.3 are met.

D.4.3.3.1 One-Story Building. The area of an EF compartment shall not be limited in a one-story building of Type II construction used as an industrial occupancy with low hazard contents or as a storage occupancy with low hazard contents where surrounded and adjoined by public ways or yards not less than 60 ft (18 m) in width.

D.4.3.3.2 Sprinklered One-Story Building.

D.4.3.3.2.1 The area of an EF compartment shall not be limited in a one-story building used for business, industrial occupancies with ordinary hazard contents, or mercantile occupancies, and assembly uses intended for viewing of indoor sporting events with spectator seating where provided with an approved, electrically supervised automatic sprinkler system in accordance with NFPA 13 and surrounded and adjoined by public ways or yards not less than 60 ft (18 m) in width.

Copyright National Fire Protection Association
Provided by IHS under license with NFPA
No reproduction or networking permitted without license from IHS
Not for Resale

Table D.4.2.2.1(b) Allowable Height in Feet and Stories — Sprinklered

Occupancy Class	I (442)	I (332)	II (222)	II (111)	II (000)	III (211)	III (200)	IV (2HH)	V (111)	V (000)
Maximum Height (ft)	**NL**	**NL**	**180**	**85**	**75**	**85**	**75**	**85**	**70**	**60**
Assembly > 1000	NL	NL	NL	4	1	3	NP	3	3	NP
Assembly > 300	NL	NL	NL	4	2	4	1	4	4	1
Assembly ≤ 300	NL	NL	NL	4	2	4	2	4	4	2
Assembly, outdoor	NL	NL	NL	NL	NL	4	2	4	4	2
Day care	NL	NL	NL	6	4	4	2	2	4	2
Health care	NL	NL	NL	3	1	1	NP	1	1	NP
Ambulatory health care	NL	NL	NL	NL	NL	NL	NL	NL	NL	NL
Detention and correctional	NL	NL	NL	2	2	2	2	2	2	2
Residential board and care, large	NL	NL	NL	NL	6	NL	6	NL	6	4
Educational Day-care homes One- and two-family Lodging or rooming houses Hotels and dormitories Apartment Residential board and care, small Mercantile Business Industrial Storage	NL	NL	NL	NL	NL	NL	NL	NL	NL	NL
Protection level: Protection Level 1	1	1	1	1	1	1	1	1	1	1
Protection Level 2 *(See Note 1)* Protection Level 3 *(See Note 3)* Protection Level 4 Protection Level 5	See Note 2.									

For SI units, 1 ft = 0.3048 m.
NL: Not limited. NP: Not permitted.
Notes:
(1) See 34.3.4.4.1.
(2) Use value for appropriate occupancy class. For industrial or storage occupancies, use values for ordinary hazard.
(3) See 34.3.5.4.1.

Table D.4.2.5.1 Maximum Allowable Number of EF Compartments per Building

Actual Building Height, Stories	Maximum Allowable Number of EF Compartments: Allowable Number of Stories from Table D.4.2.2.1(a), Table D.4.2.2.1(b), or D.4.2.5.1.1								
	1	**2**	**3**	**4**	**5**	**6**	**7**	**8**	**9**
1	4	8	12	16	20	24	28	32	36
2	—	6	9	12	15	18	21	24	27
≥3	—	—	6	8	10	12	14	16	18

D.4.3.3.2.2 The sprinkler protection specified in D.4.3.3.2.1 shall not be required in areas occupied for indoor participant sports, such as tennis, skating, swimming, and equestrian activities, provided that the following conditions are met:

(1) Exit doors directly to the outside are provided for occupants of the participant sports areas.
(2) The building is equipped with a fire alarm system with manual fire alarm boxes installed in accordance with Section 55.2.

D.4.3.3.3 Sprinklered, One- or Two-Story Storage Building. The area of an EF compartment shall not be limited in a one- or two-story building used for storage of ordinary hazard contents provided that both of the following requirements are met:

(1) The entire building is protected throughout with an approved, electrically supervised automatic sprinkler system installed in accordance with NFPA 13.
(2) The exterior walls face public ways or yards not less than 60 ft (18 m) in width.

Copyright National Fire Protection Association
Provided by IHS under license with NFPA
No reproduction or networking permitted without license from IHS
Not for Resale

D.4.3.3.4 Sprinklered Two-Story Building. The area of an EF compartment shall not be limited in a two-story building used for business, industrial, or mercantile occupancies where provided with an approved, electrically supervised automatic sprinkler system in accordance with NFPA 13 and surrounded and adjoined by public ways or yards not less than 60 ft (18 m) in width.

D.4.3.3.5 Reduced Open Space. The permanent open space of 60 ft (18 m) required in D.4.3.3.1, D.4.3.3.2, D.4.3.3.3, D.4.3.3.4, D.4.3.3.8, and D.4.3.3.9 shall be permitted to be reduced to not less than 40 ft (12 m), provided that the following requirements are met:

(1) The reduced open space shall not be permitted for more than 75 percent of the perimeter of the structure.
(2) The exterior wall facing the reduced open space shall have a minimum fire resistance rating of 3 hours.
(3) Openings in the exterior wall facing the reduced open space shall have opening protectives with a fire protection rating of 3 hours.

D.4.3.3.6 High Hazard Contents. High hazard contents required to comply with Protection Level 2, Protection Level 3, Protection Level 4, or Protection Level 5 in accordance with Chapter 34, other than deflagration hazards that are required to be stored in detached buildings, shall be permitted in unlimited area EF compartments in accordance with the limitations of D.4.3.3.6.1 through D.4.3.3.6.4.

D.4.3.3.6.1 Fire areas located at the perimeter of the building shall not exceed 10 percent of the area of the building nor the area limitations specified in Table D.4.2.1(a) and Table D.4.2.1(b), as modified by D.4.3.3, based on the percentage of the perimeter of the fire area that fronts on a street or other unoccupied space.

D.4.3.3.6.2 Fire areas other than those specified in D.4.3.3.6.1 shall not exceed 25 percent of the area limitations specified in Table D.4.2.1(a) and Table D.4.2.1(b).

D.4.3.3.6.3 Fire resistance rating requirements of fire barrier assemblies shall be in accordance with 34.3.2.3.

D.4.3.3.6.4 High hazard contents required to comply with Protection Level 2, Protection Level 3, Protection Level 4, or Protection Level 5 shall not be located higher than the height limits specified in Table D.4.2.2.1(a) and Table D.4.2.2.1(b).

D.4.3.3.7 Sprinklered One-Story Educational Building. The area of an EF compartment shall not be limited in a one-story building of Type II (111), Type II (000), Type III (211), or Type IV construction used for educational occupancies where the following criteria are met:

(1) Each classroom shall have not less than two means of egress, with one of the means of egress being a direct exit to the outside of the building.
(2) The building shall be equipped throughout with an approved, electrically supervised automatic sprinkler system in accordance with NFPA 13.
(3) The building shall be surrounded and adjoined by public ways or yards not less than 60 ft (18 m) in width.

D.4.3.3.8 Sprinklered One-Story Motion Picture Theaters. The area of an EF compartment shall not be limited in one-story motion picture theaters in buildings of Type II construction where provided with an approved, electrically supervised automatic sprinkler system throughout in accordance with NFPA 13 and surrounded and adjoined by public ways or yards not less than 60 ft (18 m) in width.

D.4.3.3.9 Sprinklered One-Story Assembly Building. The area of an EF compartment shall not be limited in a one-story assembly building used as an auditorium, church, community hall, dance hall, exhibition hall, gymnasium, lecture hall, indoor swimming pool, or tennis court of Type II construction where all the following criteria are met:

(1) The building shall not have a theatrical stage other than a raised platform.
(2) The building shall be equipped with an approved, electrically supervised automatic sprinkler system in accordance with NFPA 13.
(3) The assembly floor shall be located as follows:
    (a) At or within 21 in. (535 mm) of the level of the exterior exit discharge accessible from the main entrance/exit
    (b) For buildings that do not have a main entrance/exit, within 21 in. (535 mm) of the level of the exterior exit discharge accessible from any of the required exits
(4) All exits and exit discharges shall be level or provided with ramps to a public way.
(5) The building shall be surrounded and adjoined by public ways or yards not less than 60 ft (18 m) in width.

D.5 Enhanced Fire Compartment (EFC) Barriers. Enhanced fire compartment (EFC) barriers used to separate a building into different EF compartments shall comply with D.5.1 through D.5.3.

D.5.1 Horizontal and Vertical (EFC) Barriers. Horizontal EFC barriers shall comply with Section 8.6, and vertical EFC barriers shall comply with Section 8.4, D.5.1.1, and D.5.1.2.

D.5.1.1 Vertical EFC Barrier Walls. Vertical EFC barrier walls shall be continuous, as follows:

(1) Through all concealed spaces, such as those found above a ceiling
(2) From one of the following:
    (a) One exterior wall to another exterior wall
    (b) Floor or horizontal EFC barrier below to the horizontal EFC barrier or roof deck above
    (c) One EFC barrier wall to another EFC barrier wall
    (d) One EFC barrier wall to a fire wall
    (e) Combination of D.5.1.1(2)(a) through D.5.1.1(2)(d)

D.5.1.2 Termination. Vertical EFC barriers shall terminate in accordance with D.5.1.2.1 or D.5.1.2.2.

D.5.1.2.1 EF Compartment Roof Decks at Same Height.

D.5.1.2.1.1 Where the roof decks of adjacent EF compartments are at the same height, vertical EFC barriers shall terminate at the underside of the roof deck above.

D.5.1.2.1.2 The roof deck of each EF compartment shall be of at least 1-hour fire resistance–rated construction and shall be without openings for a width of at least 36 in. (915 mm), measured from the vertical EFC barrier.

D.5.1.2.2 EF Compartments with Differing Roof Deck Heights. Where adjacent EF compartments have differing roof deck heights, vertical EFC barrier shall terminate at one of the following:

(1) Underside of the roof deck of the upper EF compartment

Copyright National Fire Protection Association
Provided by IHS under license with NFPA
No reproduction or networking permitted without license from IHS
Not for Resale

(2) Underside of the roof deck of the lower EF compartment where the exterior wall of the upper EF compartment is without openings for a height of at least 36 in. (915 mm) above the lower roof deck
(3) Underside of the roof deck of the lower EF compartment where roof deck of the lower EF compartment is of at least 1-hour fire resistance–rated construction and without openings for a width of at least 36 in. (915 mm), measured from the wall

D.5.2 Openings and Penetrations in EFC Barriers.

D.5.2.1 Glazed Openings. Glazed openings in EFC barriers shall be limited to those in fire doors complying with D.5.2.2.

D.5.2.2 Fire Doors.

D.5.2.2.1 Fire doors in 1-hour EFC barriers shall have a fire protection rating of at least 1 hour.

D.5.2.2.2 Fire doors in EFC barriers shall limit temperature rise to 450°F (250°C) when tested in accordance with NFPA 252, *Standard Methods of Fire Tests of Door Assemblies*, or UL 10C, *Positive Pressure Fire Tests of Door Assemblies*.

D.5.2.3 Ductwork in 1-Hour EFC Barriers. Openings in 1-hour EFC barriers for air-handling ductwork or air movement shall be protected with fire dampers having a fire protection rating of 1 hour.

D.5.3 Continuity of Supporting Construction.

D.5.3.1 In Type II (000), III (200), and V (000) construction, the fire resistance of supporting construction required by Chapter 8 shall not be required where supporting horizontal EFC barriers have a 1-hour fire resistance rating, provided that all structural elements supporting the horizontal EFC barriers are protected by construction having a 20-minute finish rating.

D.5.3.2 In sprinklered buildings of Type II (000), Type III (200), and Type V (000) construction containing assembly uses other than exhibition or display, ambulatory health care, apartment, hotel and dormitory, and business occupancies, the fire resistance of supporting construction required by Chapter 8 shall not be required where supporting horizontal EFC barriers have a 1-hour fire resistance rating.

D.6 Special Building Height Requirements.

D.6.1 Aircraft Hangars. The height of one-story aircraft hangars shall not be limited where the building is surrounded by public space, streets, or permanent open yards not less in width than 1½ times the height of the building, and where the building is protected with an approved, electrically supervised sprinkler system in accordance with NFPA 13. *(See Chapters 29 and 30 for special occupancy requirements.)*

D.6.2 Low Hazard Industrial Processes Requiring Unusual Heights. Buildings and structures of Type I or Type II construction, or buildings and structures protected throughout with an approved, supervised automatic sprinkler system, designed to house low hazard industrial processes that require unusual heights to accommodate craneways or special machinery and equipment shall be permitted to be unlimited in height.

Note: Special machinery and equipment can include rolling mills, structural metal fabrication shops and foundries, or the equipment necessary for the production and distribution of electric, gas, or steam power.

D.6.3 Rack Storage Buildings. In other than buildings containing high hazard contents requiring Protection Level 1, Protection Level 2, Protection Level 3, Protection Level 4, or Protection Level 5, one-story buildings and structures used for rack storage shall not be limited in height, provided that all of the following requirements are met:

(1) The building shall be of Type II construction.
(2) The building shall not be open to the public.
(3) The building shall conform to the requirements of D.4.3.3.3.

D.6.4 Type V Residential Construction. The height of residential occupancy buildings of Type V construction shall be permitted to be increased 10 ft (3050 mm) above the limit shown in Table D.4.2.1(b) where protected throughout with an approved, supervised automatic sprinkler system in accordance with NFPA 13R.

D.6.5 Small Board and Care Occupancies. For board and care occupancies, the values in Table D.4.2.1(b) and Table D.4.2.2.1(b) for sprinklered buildings shall also apply to buildings four stories or less in height protected throughout with an approved, electrically supervised sprinkler system in accordance with NFPA 13R.

D.6.6 Enclosed Parking Structures with Occupancies Above. A basement or first story above grade plane of a building shall be considered as a separate and distinct building for the purpose of determining the location of the occupancies and type of construction, provided that all of the following conditions are met:

(1) The basement or first story above grade plane shall be of Type I construction and shall be separated from the building above with a horizontal assembly having a minimum 3-hour fire resistance rating.
(2) Shaft, stairway, ramp, or escalator enclosures through the horizontal assembly shall comply with either of the following conditions:
    (a) The enclosures shall have not less than a 2-hour fire resistance rating with opening protectives in accordance with Table 8.7.2.
    (b) Where the walls below the horizontal assembly have a minimum 3-hour fire resistance rating with opening protectives as required for walls forming a 3-hour fire barrier, the enclosure walls extending above the horizontal assembly shall be permitted to have a 1-hour fire resistance rating, provided that all the following conditions are met:
        i. The building above the horizontal assembly is not required to be of Type I construction.
        ii. The enclosure connects less than four stories above the horizontal assembly.
        iii. The enclosure opening protectives above the horizontal assembly have a minimum 1-hour fire protection rating.
(3) The building above the horizontal assembly shall contain only business, mercantile, storage, or residential occupancies or assembly occupancies having an assembly room with an occupant load of less than 300.

Copyright National Fire Protection Association
Provided by IHS under license with NFPA
No reproduction or networking permitted without license from IHS
Not for Resale

(4) The building below the horizontal assembly shall be an enclosed or open parking structure used for the parking and storage of private motor vehicles, unless otherwise permitted by the following:
   (a) Entry lobbies, mechanical rooms, and similar uses incidental to the operation of the building shall be permitted.
   (b) Business, mercantile, and assembly occupancies having an assembly room with an occupant load of less than 300 shall be permitted in addition to those uses incidental to the operation of the building (including storage areas), provided that the entire structure below the horizontal assembly is protected throughout by an approved, electrically supervised automatic sprinkler system installed in accordance with NFPA 13.
(5) The maximum building height in feet shall not exceed the limits set forth in Table D.4.2.2.1(a) or Table D.4.2.2.1(b) for the least restrictive type of construction involved.

D.6.7 Enclosed Parking Structure with Open Parking Structure Above. An enclosed parking structure located in the basement or first story below an open parking structure shall be classified as a separate and distinct building for the purpose of determining the type of construction, provided that the following conditions are met:

(1) The enclosed parking structure shall be of Type I or Type II construction and shall have a fire resistance rating at least equal to the fire resistance rating of the open parking structure.
(2) The height and the number of the floors above the basement shall be limited as specified in 30.8.1.6.
(3) The floor assembly between the enclosed parking structure and open parking structure shall be protected as required for the floor assembly of the enclosed parking structure.
(4) Openings in the floor assembly between the enclosed parking structure and open parking structure, except exit openings, shall not be required to be protected.
(5) The enclosed parking structure shall be used for the parking or storage of private motor vehicles, but shall be permitted to contain an office, a waiting room, and a toilet room having a total area of not more than 1000 ft^2 (93 m^2) and mechanical equipment rooms incidental to the operation of the building.

D.6.8 Open Parking Structure Beneath Occupancies Other than Assembly, Health Care, Detention and Correctional, and Ambulatory Health Care Occupancies.

D.6.8.1 Where a maximum one-story above-grade parking structure, enclosed, open, or a combination thereof, of Type I or Type II (222) construction or open Type IV construction, with grade entrance, is provided under occupancies other than assembly, health care, detention and correctional, and ambulatory health care occupancies, the number of stories to be used in determining the minimum type of construction shall be permitted to be measured from the floor above such a parking area.

D.6.8.2 The floor assembly between the parking structure and occupancies other than assembly, health care, detention and correctional, and ambulatory health care occupancies above shall comply with the following:

(1) The floor assembly shall be of the type of construction required for the parking structure.
(2) The floor assembly shall provide a fire resistance rating not less than the mixed occupancy separation required in Table 6.2.4.1(a) and Table 6.2.4.1(b).

D.6.9 Open Parking Structure Beneath Other Occupancies.

D.6.9.1 Limitations.

D.6.9.1.1 Open parking structures constructed under other occupancies shall not exceed the height and area limitations permitted under 30.8.1.6.

D.6.9.1.2 The height of the building above the open parking structure shall not exceed the limitations in Table D.4.2.2.1(a) or Table D.4.2.2.1(b) for the upper occupancy.

D.6.9.1.3 The height, in both feet and stories, of a building above the open parking structure shall be measured from grade and shall include both the open parking structure and the portion of the building above the parking structure.

D.6.9.2 Fire Separation. Fire separation assemblies between the parking occupancy and the upper occupancy shall correspond to the required fire resistance rating prescribed in Table 6.2.4.1(a) and Table 6.2.4.1(b) for the uses involved.

D.6.9.3 Type of Construction. The type of construction shall apply to each occupancy individually, except that structural members, including main bracing within the open parking structure, that are necessary to support the upper occupancy shall be provided with the more restrictive fire resistance ratings of the use groups involved, as shown in Table D.2.1.1(a).

D.6.9.4 Means of Egress. Means of egress for the upper occupancy shall conform to Chapter 11 and shall be separated from the parking occupancy by fire barriers having at least a 2-hour fire resistance rating, with self-closing doors in accordance with 8.7.2.

D.7 Special Occupancy Requirements.

D.7.1 Mall Buildings. Where the height and area of mall buildings comply with 27.4.4, the requirements of Section D.4 shall not apply.

D.7.2 Open Parking Structures. Where the height and area of open parking structures of Type I and Type II construction comply with NFPA 88A, *Standard for Parking Structures*, and 30.8.1.6.6, the requirements of Section D.4 shall not apply.

D.7.3 Airport Traffic Control Towers.

D.7.3.1 Where airport traffic control towers with cab floor areas not exceeding 1500 ft^2 (140 m^2) per story are constructed in accordance with Table D.7.3.1, the requirements of Section D.4 shall not apply.

D.7.3.2 Height shall be measured from grade to cab floor.

D.7.4 Special Industrial and Storage Facilities. Where the height and area of special industrial and storage facilities comply with Section D.7.4, the requirements of Section D.4 shall not apply.

D.7.4.1 The height and area of buildings and structures designed and constructed in accordance with NFPA 61, *Standard for the Prevention of Fires and Dust Explosions in Agricultural and Food Processing Facilities*, NFPA 120, *Standard for Fire Prevention and Control in Coal Mines*, NFPA 654, *Standard for the Prevention of Fire and Dust Explosions from the Manufacturing, Processing, and Handling of Combustible Particulate Solids*, and NFPA 664, *Standard for the Prevention of Fires and Explosions in Wood Processing and Woodworking Facilities*, shall be governed by Table D.7.4.1.

Copyright National Fire Protection Association
Provided by IHS under license with NFPA
No reproduction or networking permitted without license from IHS
Not for Resale

Table D.7.3.1 Allowable Building Height and Area for Airport Traffic Control Towers

Type of Construction	Height		Area per Story	
	ft	m	ft^2	m^2
I (442)	UL	UL	1500	140
I (332)	UL	UL	1500	140
II (222)	240	73	1500	140
II (111)	100	30	1500	140
II (000)	85	26	1500	140
III (211)	65	20	1500	140

UL: Unlimited.

Table D.7.4.1 Height and Area Requirements

Type of Construction	Height		Area	
	ft	m	ft^2	m^2
I (442, 332) II (222, 111, 000)	UL UL	UL UL	UL UL	UL UL
III (211, 200)	See Table D.4.2.2.1(a) or Table D.4.2.2.1(b).		See Table D.4.2.1(a) or Table D.4.2.1(b).	
IV (2HH)	65	20	See Table D.4.2.1(a) or Table D.4.2.1(b).	
V (111, 000)	See Table D.4.2.2.1(a) or Table D.4.2.2.1(b).		See Table D.4.2.1(a) or Table D.4.2.1(b).	

UL: Unlimited.

D.7.4.2 For coal preparation plants designed and constructed in accordance with NFPA 120 and grain-handling and processing facilities designed and constructed in accordance with NFPA 61, where structures of Type IV construction are surrounded on all sides by public way or open space of at least 60 ft (18 m) in width, the height shall be permitted to be increased by 20 ft (6100 mm).

D.7.4.3 Frangible Building. A frangible building containing high hazard contents requiring Protection Level 1 or Protection Level 2 shall not be required to comply with the other provisions of Section D.7.4, provided that it complies with all of the following conditions:

(A) The allowable area of a frangible building is less than or equal to 400 ft^2 (37.2 m^2) in floor area, or the building and its use comply with NFPA 1124, *Code for the Manufacture, Transportation, Storage, and Retail Sales of Fireworks and Pyrotechnic Articles*, and the EF compartment area does not exceed that allowed in Table D.4.2.1(b).

(B) The frangible building is a maximum of one story in height above grade without any basements.

(C) The frangible building has a maximum occupant load of two people, unless the building and its use comply with NFPA 1124.

(D) The frangible building is separated in accordance with Chapter 34, unless the building and its use comply with NFPA 1124.

D.7.5 Power-Generation Structures. Structures of Type I or Type II construction used exclusively for the enclosure of steam generators, steam turbines, gas turbines, heat recovery generators, and flue gas treatment equipment shall be permitted to be of unlimited building height and EF compartment area when special hazards are protected by an automatic sprinkler system in accordance with NFPA 13 or water spray fixed system in accordance with NFPA 15 or a combination thereof.

Note: See NFPA 850, *Recommended Practice for Fire Protection for Electric Generating Plants and High Voltage Direct Current Converter Stations*, for protection recommendations.

Annex E Informational References

E.1 Referenced Publications. The documents or portions thereof listed in this annex are referenced within the informational sections of this code and are not part of the requirements of this document unless also listed in Chapter 2 for other reasons.

E.1.1 NFPA Publications. National Fire Protection Association, 1 Batterymarch Park, Quincy, MA 02169-7471.

NFPA 1, *Uniform Fire Code*™, 2006 edition.

NFPA 13, *Standard for the Installation of Sprinkler Systems*, 2002 edition.

NFPA 13D, *Standard for the Installation of Sprinkler Systems in One- and Two-Family Dwellings and Manufactured Homes*, 2002 edition.

NFPA 13R, *Standard for the Installation of Sprinkler Systems in Residential Occupancies up to and Including Four Stories in Height*, 2002 edition.

NFPA 14, *Standard for the Installation of Standpipe and Hose Systems*, 2003 edition.

NFPA 15, *Standard for Water Spray Fixed Systems for Fire Protection*, 2001 edition.

NFPA 22, *Standard for Water Tanks for Private Fire Protection*, 2003 edition.

NFPA 30, *Flammable and Combustible Liquids Code*, 2003 edition.

NFPA 30B, *Code for the Manufacture and Storage of Aerosol Products*, 2002 edition.

NFPA 45, *Standard on Fire Protection for Laboratories Using Chemicals*, 2004 edition.

NFPA 61, *Standard for the Prevention of Fires and Dust Explosions in Agricultural and Food Processing Facilities*, 2002 edition.

NFPA 68, *Guide for Venting of Deflagrations*, 2002 edition.

NFPA 70, *National Electrical Code*®, 2005 edition.

NFPA 72®, *National Fire Alarm Code*®, 2002 edition.

NFPA 80, *Standard for Fire Doors and Fire Windows*, 1999 edition.

NFPA 80A, *Recommended Practice for Protection of Buildings from Exterior Fire Exposures*, 2001 edition.

NFPA 88A, *Standard for Parking Structures*, 2002 edition.

NFPA 90A, *Standard for the Installation of Air-Conditioning and Ventilating Systems*, 2002 edition.

Copyright National Fire Protection Association
Provided by IHS under license with NFPA
No reproduction or networking permitted without license from IHS
Not for Resale

NFPA 92A, *Standard for Smoke-Control Systems Utilizing Barriers and Pressure Differences*, 2006 edition.

NFPA 92B, *Standard for Smoke Management Systems in Malls, Atria, and Large Spaces*, 2005 edition.

NFPA 96, *Standard for Ventilation Control and Fire Protection of Commercial Cooking Operations*, 2004 edition.

NFPA 99, *Standard for Health Care Facilities*, 2005 edition.

NFPA *101*®, *Life Safety Code*®, 2006 edition.

NFPA 101A, *Guide on Alternative Approaches to Life Safety*, 2004 edition.

NFPA 105, *Standard for the Installation of Smoke Door Assemblies*, 2003 edition.

NFPA 110, *Standard for Emergency and Standby Power Systems*, 2005 edition.

NFPA 120, *Standard for Fire Prevention and Control in Coal Mines*, 2004 edition.

NFPA 170, *Standard for Fire Safety and Emergency Symbols*, 2006 edition.

NFPA 204, *Standard for Smoke and Heat Venting*, 2002 edition.

NFPA 211, *Standard for Chimneys, Fireplaces, Vents, and Solid Fuel-Burning Appliances*, 2003 edition.

NFPA 220, *Standard on Types of Building Construction*, 2006 edition.

NFPA 251, *Standard Methods of Tests of Fire Resistance of Building Construction and Materials*, 2006 edition.

NFPA 252, *Standard Methods of Fire Tests of Door Assemblies*, 2003 edition.

NFPA 253, *Standard Method of Test for Critical Radiant Flux of Floor Covering Systems Using a Radiant Heat Energy Source*, 2006 edition.

NFPA 255, *Standard Method of Test of Surface Burning Characteristics of Building Materials*, 2006 edition.

NFPA 259, *Standard Test Method for Potential Heat of Building Materials*, 2003 edition.

NFPA 262, *Standard Method of Test for Flame Travel and Smoke of Wires and Cables for Use in Air-Handling Spaces*, 2002 edition.

NFPA 265, *Standard Methods of Fire Tests for Evaluating Room Fire Growth Contribution of Textile Coverings on Full Height Panels and Walls*, 2002 edition.

NFPA 269, *Standard Test Method for Developing Toxic Potency Data for Use in Fire Hazard Modeling*, 2000 edition.

NFPA 285, *Standard Fire Test Method for Evaluation of Fire Propagation Characteristics of Exterior Non-Load-Bearing Wall Assemblies Containing Combustible Components*, 2006 edition.

NFPA 286, *Standard Methods of Fire Tests for Evaluating Contribution of Wall and Ceiling Interior Finish to Room Fire Growth*, 2006 edition.

NFPA 409, *Standard on Aircraft Hangars*, 2004 edition.

NFPA 551, *Guide for the Evaluation of Fire Risk Assessments*, 2004 edition.

NFPA 555, *Guide on Methods for Evaluating Potential for Room Flashover*, 2004 edition.

NFPA 654, *Standard for the Prevention of Fire and Dust Explosions from the Manufacturing, Processing, and Handling of Combustible Particulate Solids*, 2006 edition.

NFPA 664, *Standard for the Prevention of Fires and Explosions in Wood Processing and Woodworking Facilities*, 2002 edition.

NFPA 701, *Standard Methods of Fire Tests for Flame Propagation of Textiles and Films*, 2004 edition.

NFPA 703, *Standard for Fire Retardant–Treated Wood and Fire-Retardant Coatings for Building Materials*, 2006 edition.

NFPA 850, *Recommended Practice for Fire Protection for Electric Generating Plants and High Voltage Direct Current Converter Stations*, 2005 edition.

NFPA 909, *Code for the Protection of Cultural Resource Properties — Museums, Libraries, and Places of Worship*, 2005 edition.

NFPA 914, *Code for Fire Protection of Historic Structures*, 2001 edition.

NFPA 1122, *Code for Model Rocketry*, 2002 edition.

NFPA 1124, *Code for the Manufacture, Transportation, Storage, and Retail Sales of Fireworks and Pyrotechnic Articles*, 2006 edition.

NFPA 1144, *Standard for Protection of Life and Property from Wildfire*, 2002 edition.

NFPA 1221, *Standard for the Installation, Maintenance, and Use of Emergency Services Communications Systems*, 2002 edition.

NFPA, *Fire Protection Handbook*®, 19th edition.

E.1.2 Other Publications.

E.1.2.1 ACI Publication. American Concrete Institute, P.O. Box 9094, Farmington Hills, MI 48333.

ACI 216.1/TMS 0216.1, *Standard Method for Determining Fire Resistance of Concrete and Masonry Assemblies,* 1997.

E.1.2.2 AF&PA Publications. American Forest & Paper Association, 1111 19th Street, NW, Suite 800, Washington, DC 20036.

AF&PA Technical Report No. 7, *Permanent Wood Foundation System*, 1987.

AF&PA *Manual for Engineered Wood Construction*, 2005.

E.1.2.3 ANSI Publications. American National Standards Institute, Inc., 25 West 43rd Street, 4th floor, New York, NY 10036.

ANSI Z2, *Standard Safety Code for Head, Eye and Respiratory Protection.*

ANSI/BHMA A156.10, *American National Standard for Power Operated Pedestrian Doors,* 1999.

E.1.2.4 ASCE Publications. American Society of Civil Engineers, 1801 Alexander Bell Drive, Reston, VA 20191-4400.

ASCE/SEI 7, *Minimum Design Loads for Buildings and Other Structures,* 2005 with Supplement 1.

ASCE/SEI 24, *Flood Resistant Design and Construction,* 2005.

ASCE/SEI 31, *Seismic Evaluation of Existing Buildings.*

ASCE/SFPE 29, *Standard Calculation Methods for Structural Fire Protection,* 2005.

ASCE, *Guide for Tensioned Fabric Structure,* 1996.

E.1.2.5 ASHRAE Publications. American Society of Heating, Refrigerating and Air Conditioning Engineers, Inc., 1791 Tullie Circle, NE, Atlanta, GA 30329-2305.

ASHRAE 62, *Ventilation for Acceptable Indoor Air Quality*, 2001.

ASHRAE, *Handbook of Fundamentals,* 2001.

Klote, J. H., and Milke, J. A., *Design of Smoke Management Systems.*

E.1.2.6 ASME Publication. American Society of Mechanical Engineers, Three Park Avenue, New York, NY 10016-5990.

ASME A17.1, *Safety Code for Elevators and Escalators*, 2004, including Addenda ASME A17.1a–2005 and Supplement A.17.15–2005.

E.1.2.7 ASTM Publications. American Society of Testing and Materials, 100 Barr Harbor Drive, West Conshohocken, PA 19428-2959.

ASTM D 56, *Standard Test Method for Flash Point by Tag Closed Tester.*

Copyright National Fire Protection Association
Provided by IHS under license with NFPA
No reproduction or networking permitted without license from IHS
Not for Resale

ASTM D 86, *Standard Test Method for Distillation of Petroleum Products,* 2000.

ASTM D 93, *Standard Test Methods for Flash Point by Pensky-Martens Closed Cup Tester.*

ASTM D 3278, *Standard Test Methods for Flash Point of Liquids by Small Scale Closed-Cup Apparatus.*

ASTM D 3828, *Standard Test Methods for Flash Point by Small Scale Closed Tester.*

ASTM E 84, *Standard Test Method for Surface Burning Characteristics of Building Materials,* 2004.

ASTM E 96, *Standard Test Method for Water Vapor Transmission of Materials,* 2000e1.

ASTM E 119, *Standard Test Methods for Fire Tests of Building Construction and Materials,* 2000a.

ASTM E 648, *Standard Test Method for Critical Radiant Flux of Floor Covering Systems Using a Radiant Heat Energy Source,* 2003.

ASTM E 814, *Standard Test Method for Fire Tests of Through-Penetration Fire Stops,* 2002.

ASTM E 1472, *Standard Guide for Documenting Computer Software for Fire Models,* 1992.

ASTM E 1592, *Standard Test Method for Structural Performance of Sheet Metal Roof and Siding Systems by Uniform Static Air Pressure Difference,* 2001.

ASTM E 1966, *Standard Test Method for Fire-Resistive Joint Systems,* 2001.

ASTM E 2030, *Guide for Recommended Uses of Photoluminescent (Phosphorescent) Safety Markings.*

ASTM E 2280, *Standard Guide for Fire Hazard Assessment of the Effect of Upholstered Seating Furniture within Patient Rooms of Health Care Facilities.*

ASTM E 2307, *Standard Test Method for Determining Fire Resistance of Perimeter Fire Barrier Systems Using Intermediate-Scale, Multi-Story Test Apparatus.*

ASTM F 1677, *Standard Test Method for Using a Portable Inclinable Articulated Strut Tester (PIAST),* 1996.

ASTM F 1679, *Standard Test Method for Using a Variable Incidence Tribometer (VIT),* 2000.

E.1.2.8 BHMA Publication. Builders Hardware Manufacturers Association, 355 Lexington Avenue, 17th Floor, New York, NY 10017–6603.

BHMA/ANSI A156.19, *American National Standard for Power Assist and Low Energy Power Operated Doors,* 2002.

E.1.2.9 FM Global Publications. FM Global, 1301 Atwood Avenue, P.O. Box 7500, Johnston, RI 02919.

FM Data Sheet 1-22, *Criteria for Maximum Foreseeable Loss Fire Walls and Space Separations,* 2000.

FM Data Sheet 1-23, *Protection of Openings.*

FM Data Sheet 1-29, *Above-Deck Roof Components,* 2002.

FM Data Sheet 1-49, *Perimeter Flashing,* 2000.

FM 4450, *Approval Standard for Class 1 Insulated Steel Deck Roofs,* 1989.

FM 4470, *Approval Standard for Class 1 Roof Covers,* 1986.

FM 4471, *Approval Standard for Class 1 Panel Roofs,* 1995.

FM 4880, *Approval Standard for Class 1 Insulated Wall or Wall and Roof/Ceiling Panels; Plastic Interior Finish Materials; Plastic Exterior Building Panels; Wall/Ceiling Coating Systems; Interior or Exterior Finish Systems,* 1994.

E.1.2.10 IAPMO Publication. International Association of Plumbing and Mechanical Officials, 5001 E. Philadelphia Street, Ontario, CA 91761.

UPC, *Uniform Plumbing Code,* 2003.

E.1.2.11 ICC Publication. International Code Council, 5203 Leesburg Pike, Suite 600, Falls Church, VA 22041.

ICC/ANSI A117.1, *American National Standard for Accessible and Usable Buildings and Facilities,* 2003.

E.1.2.12 IEC Publication. International Electrotechnical Commission, 3 rue de Varembé, P.O. Box 131, 1211 Geneva 20, Switzerland.

IEC 60364-1, *Electrical Installation of Buildings,* 1996.

E.1.2.13 SFPE Publications. Society of Fire Protection Engineers, 7315 Wisconsin Avenue, Suite 122SW, Bethesda, MD 20814.

SFPE, *Enforcer's Guide to Performance-Based Design Review.*

SFPE, *Engineering Guide — Evaluation of the Computer Fire Model DETACT-QS.*

SFPE, *Engineering Guide to Performance-Based Fire Protection Analysis and Design of Buildings,* 2000.

SFPE, *Engineering Guide to Predicting Human Behavior in Fire,* 2000.

SFPE, *Guidelines for Peer Review in the Fire Protection Design Process.*

SFPE, *Handbook of Fire Protection Engineering,* third edition.

E.1.2.14 SPC Publications. Southern Pine Council, P.O. Box 641700, Kenner, LA 70065-1700.

Permanent Wood Foundations: Design & Construction, 2000.

E.1.2.15 UL Publications. Underwriters Laboratories Inc., 333 Pfingsten Road, Northbrook, IL 60062-2096.

UL 10B, *Standard for Fire Tests of Door Assemblies,* 1997; Revised 2001.

ANSI/UL 10C, *Standard for Positive Pressure Fire Tests of Door Assemblies,* 2001.

ANSI/UL 263, *Standard for Fire Tests of Building Construction and Materials,* 2003.

UL 580, *Standard for Tests for Uplift Resistance of Roof Assemblies,* 1994, Revised 1998.

ANSI/UL 723, *Standard for Test for Surface Burning Characteristics of Building Materials,* 2003.

ANSI/UL 1040, *Standard for Fire Test of Insulated Wall Construction,* 1996, Revised 2001.

ANSI/UL 1256, *Standard for Safety for Fire Test of Roof Deck Constructions,* 2002.

ANSI/UL 1479, *Standard for Fire Tests of Through-Penetration Firestops,* 2003.

UL Subject 1588, *Outline of Investigation for Roof and Gutter De-Icing Cable Units,* 2002.

ANSI/UL 1715, *Standard for Fire Test of Interior Finish Material,* 2004.

ANSI/UL 1820, *Standard for Fire Test of Pneumatic Tubing for Flame and Smoke Characteristics,* 1999.

ANSI/UL 1887, *Standard for Fire Test of Plastic Sprinkler Pipe for Visible Flame and Smoke Characteristics.*

ANSI/UL 1897, *Standard for Uplift Tests for Roof Covering Tests,* 2004.

UL 2024, *Standard for Optical Fiber Cable Raceway,* 2002.

UL 2043, *Standard for Fire Test for Heat and Visible Smoke Release for Discrete Products and Their Accessories Installed in Air-Handling Spaces,* 2001.

--`,,```,,,,````-`-`,,`,,`,`,,`---

Copyright National Fire Protection Association
Provided by IHS under license with NFPA
No reproduction or networking permitted without license from IHS
Not for Resale

ANSI/UL 2079, *Standard for Tests for Fire Resistance of Building Joint Systems,* 2004.

UL, *Fire Resistance Directory,* 2004.

E.1.2.16 U.S. Government Publications. U.S. Government Printing Office, Washington, DC 20402.

Allowable Stress Design A.45.4.1.1

16 CFR 1630, *Standard for the Flammability of Carpets and Rugs,* 1993.

28 CFR 36, *Americans with Disabilities Act Accessibility Guidelines,* 1994.

29 CFR 1910.1000, *Storage and Handling of Petroleum Gases,* 2001.

29 CFR

49 CFR, *Transportation.*

EPA, EPA-402-R-93-021.

18 USC 40

FEMA Technical Bulletin 1-93, *Openings in Foundation Walls for Buildings Located in Special Flood Hazard Areas,* 1993.

FEMA Technical Bulletin 2-93, *Flood Resistant Materials Requirements for Buildings Located in Special Flood Hazard Areas,* 1993.

FEMA Technical Bulletin 3-93, *Nonresidential Floodproofing — Requirements and Certification for Buildings Located in Special Flood Hazard Areas,* 1993.

FEMA Technical Bulletin 4-93, *Elevator Installation for Buildings Located in Special Flood Hazard Areas,* 1993.

FEMA Technical Bulletin 5-93, *Free-of-Obstruction Requirements for Buildings Located in Coastal High Hazard Areas,* 1993.

FEMA Technical Bulletin 7-93, *Wet Floodproofing Requirements for Structures Located in Special Flood Hazard Areas,* 1993.

FEMA Technical Bulletin 8-96, *Corrosion Protection for Metal Connectors in Coastal Areas,* 1996.

FEMA Technical Bulletin 9-99, *Design and Construction Guidance for Breakaway Walls Below Elevated Coastal Buildings,* 1999.

FEMA Technical Bulletin 10-01, *Ensuring that Structures Built on Fill in or Near Special Flood Hazard Areas Are Reasonably Safe from Flooding,* 2001.

FEMA 348, *Protecting Building Utilities from Flood Damage: Principles and Practices for the Design and Construction of Flood Resistant Building Utility Systems,* 1999.

FEMA 356, *Prestandard and Commentary for the Seismic Rehabilitation of Buildings,* 2000.

NIST, *Feasibility of Fire Evacuation by Elevators at FAA Control Towers,* 1994.

U.S. Weather Bureau Technical Paper No. 40 "Rainfall Frequency Atlas of the United States for Durations from 30 Minutes to 24 Hours and Return Periods from 1 to 100 Years," Weather Bureau, Dept. of Commerce, 1961.

E.2 Informational References. The following documents or portions thereof are listed here as informational resources only. They are not a part of the requirements of this document.

Groner, N. E., and B. M. Levin, "Human Factor Considerations in the Potential for Using Elevators in Building Emergency Evacuation Plans," National Institute of Standards and Technology, NIST-GCR-92-615, 1992.

Groner, N. E., and B. M. Levin, "Human Behavior Aspects of Staging Areas for Fire Safety in GSA Buildings," National Institute of Standards and Technology, NIST-GCR-92-606, 1992.

Groner, N. E., and B. M. Levin, "Human Factor Considerations for the Potential Use of Elevators for Fire Evacuation of FAA Air Traffic Control Towers," National Institute of Standards and Technology, NIST-GCR-94-656, 1994.

Industrial Ventilation: A Manual of Recommended Practice, 23rd ed., American Conference of Government Industrial Hygienists, 1998.

Templer, J. A., *The Staircase: Studies of Hazards, Falls and Safer Design*, MIT Press Publications, Cambridge, MA, 1992.

SEAOC, *Recommended Lateral Force Requirements and Commentary* (SEAOC Blue Book) (Appendix G), 1999.

Tu, K.-M. and S. Davis, *Flame Spread of Carpet Systems Involved in Room Fires,* Center for Fire Research, National Bureau of Standards, 1976.

E.3 References for Extracts in Informational Sections.

ASCE/SEI 7, *Minimum Design Loads for Buildings and Other Structures*, 2002.

NFPA 1, *Uniform Fire Code*™, 2006 edition.

NFPA 90A, *Standard for the Installation of Air-Conditioning and Ventilating Systems*, 2002 edition.

NFPA 211, *Standard for Chimneys, Fireplaces, Vents, and Solid Fuel-Burning Appliances*, 2003 edition.

NFPA 221, *Standard for High Challenge Fire Walls, Fire Walls, and Fire Barrier Walls*, 2006 edition.

Copyright National Fire Protection Association
Provided by IHS under license with NFPA
No reproduction or networking permitted without license from IHS
Not for Resale

Index

© 2005 National Fire Protection Association. All Rights Reserved.

The copyright in this index is separate and distinct from the copyright in the document that it indexes. The licensing provisions set forth for the document are not applicable to this index. This index may not be reproduced in whole or in part by any means without the express written permission of NFPA.

-A-

Accessibility
Apartment buildings 25.1.7
Day-care occupancies 18.1.7
Industrial occupancies 29.1.7
Residential board and care occupancies 25.3.1.4, 26.2.1.3
Storage occupancies 30.1.7
Accessible (accessibility) ..... 4.1.3.1.2.4, 4.1.5.1, Chap. 12
Access-controlled egress doors ..... *see* Doors
Additions 15.8.6
Application 12.1
Areas of refuge ..... *see* Areas of refuge
Assembly occupancies ..... *see* Assembly occupancies
Attics ..... *see* Attics
Automatic teller machines and fare machines 12.20
Bathing facilities 12.13
Change of use requirements 15.7.2.3
Code, compliance to 15.1.2.4, 15.5.1.5, A.15.1.2.4.2
Concealed spaces 15.4.2.9
Dampers ..... *see* Dampers
Definition 3.3.1
Demolition operations A.14.1
Depositories, vending machines, change machines, mail boxes, and fuel dispensers 12.28
Detention and correctional occupancies ..... *see* Detention and correctional occupancies
Dining surfaces and work surfaces 12.26
Dressing, fitting, and locker rooms 12.22
Drinking fountains and water coolers 12.11
Enhanced fire compartments D.1.5
Exceptions, general 12.3
Fire alarm systems 12.15
Fire department ..... 7.1.5, A.7.1.5.2.5.6(B)
Access panels 46.5.3
Mall buildings 27.4.4.9
Fire escape ladders 11.2.9.3
Historic buildings ..... *see* Historic buildings
Industrial equipment ..... *see* Industrial equipment, access to
Judicial facilities ..... *see* Judicial facilities
Kitchens and kitchenettes 12.12, 12.45.3.2.6
Laundry equipment 12.14
Means of egress ..... *see* Means of egress
Modifications 15.5.4
Parking spaces 12.8
Passenger loading zones 12.9
Performance-based design option 5.2.2.7, 5.3.4
Play areas ..... *see* Play areas (accessibility)
Renovations, requirements for 15.4.4
Residential occupancies ..... *see* Residential occupancies
Roofs ..... *see* Roof assemblies/roofs
Sales and service counters 12.27
Saunas and steamrooms 12.41
Shooting facilities with firing positions 12.43
Signs ..... *see* Signs (marking)
Skywalk bridges 13.8.7
Sports facilities ..... *see* Sports facilities
Storage facilities, self-service ..... *see* Storage occupancies
Swimming pools, wading pools, and spas 12.42, 12.45.15
Technical requirements 12.44, 12.45
Toilets ..... *see* Toilet rooms
Transportation facilities (accessibility) 12.18
Wheelchair spaces in assembly seating 12.21
Windows 12.29
Accessible routes (accessibility) ..... 12.2.3 Ex. 1, 12.6
Amusement rides 12.45.8.2.2
Assembly area ..... 16.2.5.4, A.16.2.5.4.2 to A.16.2.5.4.4
Definition 3.3.4
Enhanced fire compartments D.1.5.2
Fishing piers and platforms 12.45.11.1
Golf facilities 12.45.12.2
Historic buildings ..... 12.2.5 Ex.
Play areas 12.45.14.2
Recreational boating facilities 12.45.9.2
Residential dwelling units 12.45.5.3
Accessory buildings (definition) 3.3.65.1
Accreditation body (definition) 3.3.6, 45.2.1
Acetylene cylinder charging plants 6.4.2.1
Active sub-slab depressurization system ..... *see* Depressurization system
Actual start of construction (flood resistance) ..... *see* Start of construction (flood resistance)
Actuating member or bar ..... 11.2.1.7.1(1)
Definition 3.3.9
Additions ..... 1.3.4(2), 12.2.2, 15.1.1.1, 15.1.1.4, 15.8; *see also* Alterations (alter); specific occupancies
Accessibility 12.33.3.4, 15.8.6
Play areas 12.40.1
Compliance to codes ..... 15.1.2, A.15.1.2.2.2 to A.15.1.2.4.2
Definition 3.3.10, 15.2.2.7, 35.2.1
Energy efficiency ..... 15.8.7, 51.1.1(2)
Fire protection systems 15.8.3
Heights and areas 15.8.2
Plumbing requirements 15.8.8
Smoke alarms 15.8.5
Stairs and escalators 12.6.2.3.2
Adjacent buildings 4.1.3.1.2.3, 4.1.3.2.2.3
Excavations 36.2.3.1
Outside stairs, access from 11.2.2.7.1
Performance-based design option 5.2.2.6, 5.2.4.2, A.5.2.2.6
Adjacent persons 4.1.3.1.2.3, 4.1.3.2.2.3
Adjusted shear resistance (definition) 3.3.526.1, 44.1.1.1
Aerosol containers (definition) 3.3.119.1
Aerosols ..... 6.3.2.4.4(1)
Definition 3.3.12
Manufacture and storage ..... 6.4.2.3, 34.1.1.2(9)
Agent, inspection ..... *see* Inspection agent
Agricultural and food products facilities 6.4.2.2
Agricultural buildings ..... 6.4.2.2, 15.7.2.4.1(12), 34.1.1.2(6)
Definition 3.3.65.2
Deflection limits ..... Table 35.1.2.8.1.1
Fire department access 7.1.5.2.1.1
Occupancy category for wind, snow, and earthquake ..... Table 35.3.1
Roof covering classification ..... 38.2.3(3)
Agricultural dust ..... *see* Dust
Air-conditioning systems ..... 50.1(8), 50.1(9); *see also* Ducts and air transfer openings; Heating, ventilating, and air conditioning (HVAC) systems
Elevator machine rooms/machinery spaces 54.5
Fire department access to, mall buildings 27.4.4.9
Membrane structures 32.2.1.5.1
Performance-based design option 5.3.5.6
Permits 1.7.6.1.1.2
Air control towers ..... *see* Airport traffic control towers

Copyright National Fire Protection Association
Provided by IHS under license with NFPA
No reproduction or networking permitted without license from IHS
Not for Resale

Aircraft engine test facilities 6.4.2.4
Definition 3.3.17
Aircraft hangars ..... 15.7.2.4.1(3), 29.6, 30.6, A.29.6, A.30.6
Construction 6.4.2.5
Enhanced fire compartments D.6.1
Height of 7.4.3.6.2
Air-inflated structures 32.2.1.1, 32.2.4, A.32.2.4.1
Definition 3.3.601.2, 32.1.3.9.1
Airport loading walkways ..... 16.4.10, A.16.4.10.2(2)
Airport terminal buildings 6.4.2.6, A.11.3.1.2
Airport traffic control towers ..... A.6.1.11.1(1)
Accessibility ..... 12.6.2.3.1 Ex. 6
Enhanced fire compartments D.7.3
Height and area requirements 7.4.1.3.4
Occupancy category for wind, snow, and earthquake ..... Table 35.3.1
Air-right structures 13.7
Definition 3.3.601.3
Air-supported structures 32.2.1.1, 32.2.4, A.32.2.4.1
Definition 3.3.601.4, 32.1.3.9.2, A.3.3.602.4, A.32.1.3.9.2
Air transfer openings .....*see* Ducts and air transfer openings
Air-transfer openings .....*see* Ducts and air transfer openings
Aisle accessways
Definition 3.3.22, A.3.3.22
Serving seating at tables 16.2.5.7, A.16.2.5.7
Serving seating not at tables 16.2.5.5, A.16.2.5.5
Width of ..... 11.3.4.1.2(2), 16.2.5.4.4 to 16.2.5.4.6, 16.2.5.5.1, A.16.2.5.4.4, A.16.2.5.5.1
Aisles 11.3.1.3.2, 11.8.1.1, 11.9.1.2, A.11.8.1.1
Checkout 12.16.11, 12.27.2, 12.27.3
Dead-end 16.2.5.6.3, 16.4.2.7
Definition 3.3.21, A.3.3.21
Fasciae or railing systems ..... 16.2.11.1.2 to 16.2.11.1.4; *see also* Handrails
Health care occupancies ..... 19.2.1, 19.2.3.3, 19.2.3.4, 20.2.1, A.19.2.3.3, A.19.2.3.4(1), A.19.2.3.4(4)
Serving seating at tables ..... 6.2.5.8, A.6.2.5.8.1 to A.6.2.5.8.3
Serving seating not at tables ..... 16.2.5.6, A.16.2.5.6.4 to A.16.2.5.6.10
Width of ..... 11.3.4.1.2(2)
Assembly occupancies ..... 16.2.5.4.4 to 16.2.5.4.6, 16.2.5.6.4, 16.2.5.7, 16.2.5.8.2, 16.2.5.8.3, A.16.2.5.4.4, A.16.2.5.6.4, A.16.2.5.7, A.16.2.5.8.2, A.16.2.5.8.3
Detention and correctional occupancies 21.2.3.2
Educational occupancies 17.2.5.6
Mercantile occupancies 27.2.5.4
Theater-type seating 16.2.3.2, A.16.2.3.2
Alarms and alarm systems ..... 55.2, A.55.2.1 to A.55.2.5.3
Access-controlled egress doors, opening of ..... 11.2.1.6.2(6), 11.2.1.6.2(7)
Annunciation .....*see* Annunciation, alarms
Apartment buildings 25.3.4, A.25.3.4.5.1
Assembly occupancies ..... 7.6.3.2.2(2), 16.3.4, 16.4.3.3.4, 16.4.3.5, 16.4.7.4 to 16.4.7.6, A.16.3.4.2.3
Business occupancies 28.3.4
Day-care occupancies 18.3.4, 18.6.3.4
Dead-end corridors 15.6.2.1.5.2
Detention and correctional occupancies 21.3.4, 21.4.4.9, 21.4.5.2.4, 21.5.1.2, A.21.3.4.3.1.2
Door alarms ..... 11.1.9, 11.2.1.5, A.11.2.1.5.4 to A.11.2.1.5.12
Educational occupancies ... 17.3.4, A.17.3.4.2.3.1 to A.17.3.4.3.1.1
Elevator lobby doors, activation of 11.2.13.5
Emergency alarm system 34.3.7.2.4.5, 34.3.7.3.4.6, 34.3.7.3.6
Definition 3.3.608.6
Emergency control 19.3.4.4, 20.3.4.4, 55.2.1.3, 55.2.6
Evacuation .....*see* Notification
Exit enclosure penetrations 11.1.3.2.1.7
Guest rooms 12.45.3.3.1, 12.45.3.3.2
Health care occupancies ..... 19.2.2.2.7, 19.3.4, 19.5.1.2, A.19.2.2.2.7, A.19.3.4.2.1 to A.19.3.4.5.3
Ambulatory health care occupancies 20.2.2.2.4, 20.3.4
High hazard contents 34.3.2.1.2, 34.3.7.2.5.2, 34.3.7.2.5.3, 34.3.7.3.5
High-rise buildings 33.2.1, 33.2.4.2.3, 33.2.5, A.33.2.1.1, A.33.2.5
Hotels and dormitories ..... 24.3.4, A.24.3.4.3 to A.24.3.4.9
Industrial occupancies 29.3.4, 29.3.5.1.4
Initiation .....*see* Initiation, alarm
Lodging or rooming houses 23.3.4, A.23.3.4.3.1
Manual ..... 15.6.2.6.2, 55.2.2(1), 55.2.2.1, A.55.2.1.4 to 55.2.1.7
Apartment buildings 25.3.4.2.1
Business occupancies ..... 28.3.4.2(1)
Detention and correctional occupancies ..... 21.3.4.2, 21.4.4.9.1, 21.4.5.2.4(2)
Educational occupancies 17.3.4.2.3, A.17.3.4.2.3.1, A.17.3.4.2.3.2
Health care occupancies 19.3.4.2.2, 20.2.2.2.4, 20.3.4.2
Hotels and dormitories 24.3.4.2
Industrial occupancies ..... 29.3.4.2(1)
Lodging or rooming houses 23.3.4.2
Mercantile occupancies ..... 27.3.4.2(1)
Parking structures ..... 30.8.3.4.2(1)
Residential board and care occupancies 26.2.3.4.1, 26.3.3.4.2
Semiconductor fabrication 34.3.7.3.5
Storage occupancies ..... 30.3.4.2(1), 30.8.3.4.2(1)
Mercantile occupancies 27.3.4
Bulk merchandising retail buildings 27.4.5.4
Malls 27.4.4.10
Multiple station alarm devices 18.6.3.4.3, 55.2.2.6.1
Definition 3.3.160.1
Notification .....*see* Notification
Occupancy classification, change in ..... 15.7.3.4.2(2), 15.7.3.4.3(4), 15.7.3.4.4(3)
Occupant response characteristics ..... 5.4.3, 5.8.5, A.5.4.3.1 to A.5.4.3.6
One- and two-family dwellings 22.3.4
Open structures 31.5.2.10
Plans 1.7.6.3.1.4
Reconstruction requirements 15.6.2.6
Residential board and care occupancies ..... 26.2.3.4, 26.2.3.5.5(1), 26.3.3.4
Residential dwelling units ..... 12.45.5.6.1 to 12.45.5.6.4
Semiconductor manufacturing operations 34.3.7.2.5.2, 34.3.7.2.5.3, 34.3.7.3.5, 34.3.7.3.7.4
Single-station 18.6.3.4.3, 55.2.2.6.1
Definition 3.3.23.1
Smoke 55.2.2.6, A.55.2.2.6.3
Apartment buildings 25.3.4.5, A.25.3.4.5.1
Building rehabilitation ..... 15.6.2.6.1, 15.7.3.4.5(2), 15.8.5
Definition 3.3.23.2
Health care occupancies A.19.3.4.2.1
Hotels and dormitories 24.3.4.9, A.24.3.4.9
Lodging or rooming houses 23.3.4.5
One- and two-family dwellings 22.3.4
Residential board and care occupancies 26.2.3.4.3, 26.3.3.4.7
Storage occupancies 30.3.4, 30.3.5.1.2
Parking structures 30.8.3.4
Supervisory signals 34.3.2.1.1, 55.2.4.3, 55.2.8.8, 55.3.2.1, A.55.2.4.3, A.55.3.2.1
Towers 31.6.12
Trouble signals 55.2.4.3, 55.2.8.7, A.55.2.4.3
Visible alarms 12.15, 55.2.3.5, 55.2.3.8
Apartment buildings ..... 25.3.4.3.1(2)
Assembly occupancies 16.3.4.3.1, 16.3.4.3.3, 16.4.7.6
Health care occupancies 19.3.4.3.1.2, A.19.3.4.3.1.2
Hotels and dormitories 12.45.3.3.2, 24.3.4.4, 24.3.4.5, A.24.3.4.4
Industrial occupancies ..... 29.3.4.3.1(2)
Lodging or rooming houses 23.3.4.3.1, A.23.3.4.3.1
Residential dwelling units ..... 12.45.5.6.1.2, 12.45.5.6.2.1 to 12.45.5.6.4

Copyright National Fire Protection Association
Provided by IHS under license with NFPA
No reproduction or networking permitted without license from IHS
Not for Resale

Storage occupancies ..... 30.3.4.3.1(2)
Voice communication/public address systems 55.2.3.8.2
Assembly occupancies ..... 16.3.4.1(2), 16.3.4.3.3 to 16.3.4.3.5, 16.4.3.3.4, 16.4.3.5
Business occupancies ..... 28.3.4.3.1(2)
High-rise buildings 33.2.1.1, 33.2.5.5, A.33.2.1.1
Malls ..... 27.4.4.10.3.1(2)
Mercantile occupancies ..... 27.3.4.3.1(2), 27.4.5.4.3(2)
Residential board and care occupancies 26.3.3.4.5
Waterflow 55.2.2.1.5, 55.2.2.2, 55.3.1.6, 55.3.2.2.1, A.55.2.2.1.5
Detention and correctional occupancies 21.3.4.2
Health care occupancies 19.3.4.2.1, 20.3.5.3, A.19.3.4.2.1
High hazard contents 34.3.2.1.2
High-rise buildings ..... 33.1.3.1, 33.2.2.2, 33.2.5.5(6), 55.3.1.6
Industrial occupancies 29.3.5.1.4
Residential board and care occupancies ..... 26.2.3.5.5(1)
Smokeproof enclosure systems, actuation of ..... 11.2.3.10.2(1)
Storage occupancies 30.3.5.1.2
Alcohol-based hand-rub dispensers 19.3.2.6, A.19.3.2.6
Alleys ..... 13.2, 37.1.3.1(3)
Definition 3.3.24
Allowable stress design ..... *see* Design
Alterations (alter) ..... 1.7.5.1, 4.5.5.3, 12.2.3; *see also* Additions; Modifications; Renovations
Accessibility, affecting
Amusement rides 12.34.4
Check-out aisles 12.27.3
Definition 3.3.26.2, A.3.3.26.2
Guest rooms, transient lodging 12.24.1.1
Health care occupancy sleeping rooms 12.23.1
Primary function areas 12.2.4
Prohibited reduction in access 12.2.3.1
Residential dwelling units 12.33.3.5
Stairs and escalators ..... 12.6.2.3.2, 12.10 Ex. 2
Toilet and bathing facilities ..... 12.13.2.1 Ex.
Definition 3.3.26.1
Energy efficiency ..... 51.1.1(2)
Alternating tread devices 11.2.11
Apartment buildings 25.2.2.9
Assembly occupancies 16.2.2.9, 16.2.4.6
Business occupancies 28.2.2.11
Day-care occupancies 18.2.2.9
Detention and correctional occupancies 21.2.2.9
Educational occupancies 17.2.2.9
Health care occupancies 19.2.2.9
Hotels and dormitories 24.2.2.11
Industrial occupancies 29.2.2.11
Mercantile occupancies 27.2.2.11
One- and two-family dwellings, access to areas of 22.2.5.4
Performance-based design option ..... 5.3.2(7)
Residential board and care occupancies 26.3.2.1.9
Storage occupancies 30.2.2.9
Alternative calculation procedure (definition) 3.3.27
Alternatives to code ..... *see* Equivalency (to code)
Aluminum ..... Chap. 42
Deflection limits, structural members 35.1.2.8.5
Powder facilities 6.4.2.7
Ambulance stretcher accommodation, elevator 54.3
Ambulatory health care occupancies ..... 19.1.2.3, Chap. 20, A.19.1.2.3
Building services 20.5
Definition 3.3.424.6.1, 6.1.6.1
Energy efficiency ..... 51.2.1(4)
Flood-resistant construction ..... 39.11.1.2.1(4)
General requirements ..... 20.1, 34.1.3.2, Table 34.1.3.2(b), Table 34.3.2.3, A.20.1.1.1, A.20.1.2.2
Height and area requirements ..... Table 7.4.1, Table 15.7.3.8.1.1
Means of egress ..... 20.1.2.3 to 20.1.2.5, 20.2
Multiple occupancy 20.1.2, A.20.1.2.2
Occupancy classification 20.1.3
Change of ..... Table 15.7.3.5.1.1, Table 15.7.3.8.1.1, 15.7.3.8.4, Table 15.7.3.9.1.1, 19.1.1.4.2(3), 20.1.1.2
Occupant load 20.1.7
Protection ..... 20.3, A.20.3.2.3.2 to A.20.3.7.7
Rehabilitation of 20.1.1.1.2
Additions 20.1.1.1.3
Change of occupancy classification ..... Table 15.7.3.5.1.1, Table 15.7.3.8.1.1, 15.7.3.8.4, Table 15.7.3.9.1.1, 19.1.1.4.2(3), 20.1.1.2
Special provisions 20.4
Ammonium nitrate storage 6.4.2.8
Amusement buildings, special ..... *see* Special amusement buildings
Amusement rides (accessibility) 12.6.2.9, 12.34, 12.45.8.2
Platform (wheelchair) lifts 12.6.7.7
Signs 12.16.12
Wheelchair spaces 12.6.2.9.2, 12.34.3, 12.45.8.2.4
Analysis
Sensitivity 5.4.1.3, 5.4.1.4, 5.5.1.5, 5.5.1.6, 5.8.7, 5.8.8
Definition 3.3.30.1
Uncertainty 5.6.2, 5.6.3.3
Definition 3.3.30.2
Anchor buildings 27.4.4.3.1
Definition 3.3.65.3, 27.4.4.2.1, A.27.4.4.2.1
Extinguishing systems 27.4.4.7.1.1
Means of egress 27.4.4.5.6, A.27.4.4.5.6
Openings 27.4.4.3.3
Separation 27.4.4.3.2
Anesthetizing locations 19.3.2.3, 20.3.2.2
Angle walls 8.3.2.16.3
Animal containment areas (accessibility) 12.3.12
Annunciation, alarms 55.2.2.6.5, 55.2.7, 55.2.8
Apartment buildings 25.3.4.3.2
Health care occupancies 19.3.4.3.3
High-rise buildings 33.2.5.5
Hotels and dormitories 24.3.4.6
Residential board and care occupancies 26.3.3.4.3
Zoning 55.2.7
Apartment buildings ..... Chap. 25
Accessibility 25.1.7
Building services ..... Table 25.3.2.2, 25.5
Day-care occupancies in 18.1.2.2
Definition 3.3.65.4, 6.1.8.1.5, A.3.3.65.4
Dormitories as 24.1.2
Energy efficiency ..... 51.2.1(8)
Flood-resistant construction ..... 39.11.1.2.2(6)
General requirements ..... 25.1, 34.1.3.2, Table 34.1.3.2(h), Table 34.3.2.3
Habitable rooms, dimensions of 15.5.2.1.3
High-rise buildings 25.4
Historic buildings, transoms in 15.10.4.6
Live loads ..... Table A.35.6.1.2
Means of egress 25.1.2.2, 25.2, A.25.2.2.2.2.1, A.25.2.2.10.1
Means of escape 25.2.1.2, 25.2.2.8, 25.2.2.9
Multiple occupancy 25.1.2
Occupancy, classification of 25.1.3, A.22.1.1.2
Occupant load ..... Table 11.3.1.2, 25.1.6, 25.2.3.2 to 25.2.3.4
Protection 25.3, A.25.3.4.5.1, A.25.3.5.1
Rehabilitation of 25.1.1.2
Modifications 25.3.5.1, A.25.3.5.1
Reconstruction 15.6.2.6.1.1, 15.6.2.7.3
Separated occupancies, fire-resistant rated separations for ..... Table 6.2.4.1(b)
Sloped glazing, screens for ..... 46.8.3.6(4), 46.8.3.6(5)
Walls, glazing in ..... 46.5.2.2(2)
Apartment hotels ..... A.6.1.8.1.3; *see also* Hotels
Appeals, board of 1.7.3
Flood-resistant construction, variances for C.4
Liability 1.7.4
Notice of violation, appeal of 1.7.5.3.8
Application of code 1.3
Buildings and structures 1.3.1
Existing buildings and structures 1.3.4

Copyright National Fire Protection Association
Provided by IHS under license with NFPA
No reproduction or networking permitted without license from IHS
Not for Resale

Moved buildings and structures ..... 1.3.3, 1.3.4(3)
References to requirements of other codes and standards ... 1.3.2
Approved/approvals .....*see also* Permits
Alternative methods, use of 1.5.2 to1.5.4, 15.1.2.3, A.15.1.2.3.2
Assembly occupancies, layouts of 16.2.5.9
Day-care occupancies, layout of 18.1.6.2
Definition 3.2.1, A.3.2.1
Flood-resistant construction 39.12.1
Grandstands and bleachers, seating in 32.7.8.2.4
By other authorities having jurisdiction 1.7.2, 1.7.6.1.2, C.2.2
Performance-based design option ..... 5.1.5, 5.1.6.1, 5.5.1.1 to 5.5.1.3, A.5.1.5, A.5.5.1.2, A.5.5.1.3
Arches ..... Table 7.2.1.1
Enhanced fire compartments ..... Table D.2.1.1(a), D.2.3.1, D.2.4.1, D.2.5.1, D.2.5.3, D.2.5.5.3, D.2.5.6.2, D.2.6
Type IV construction 7.2.5.3, 7.2.5.5.3, 7.2.5.6.2, D.2.5.1, D.2.5.5.3, D.2.5.6.2
Type V construction 7.2.6, D.2.6
Area of sport accessibility (accessibility) 3.3.35
Areas .....*see* Assembly area (accessibility); Building area; Control areas; Detention and correctional residential housing area; Fabrication area; Fire areas; Flood hazard areas; Floor area; Gross leasable area; Hazardous areas; Large areas; Living area; Work area
Areas of refuge ..... 11.1.3.2.3, 11.2.12, 12.7 Ex. 2, A.11.1.3.2.3, A.11.2.12.2.3 to A.11.2.12.3.4
Accessible ..... 11.2.12.2, 11.5.4.1, 11.5.4.3, 11.5.4.4, A.11.2.12.2.3 to A.11.2.12.2.6, A.11.5.4.1
Definition 3.3.34.1
Signs 12.16.4.2
Apartment buildings 25.2.2.10, A.25.2.2.10.1
Assembly occupancies 16.2.2.10
Business occupancies 28.2.2.12
Day-care occupancies 18.2.2.10
Definition 3.3.34, A.3.3.34
Detention and correctional occupancies ..... 21.2.2.10, 21.2.11.6, 21.3.7.1.2(3)
Educational occupancies 17.2.2.10
Exterior 11.7.1.4
Health care occupancies 19.2.2.10
Hotels and dormitories 24.2.2.12, A.24.2.2.12.1
Industrial occupancies 29.2.2.12
Mercantile occupancies 27.2.2.12
Residential board and care occupancies 26.3.2.1.10
Signs 12.16.4.2
Storage occupancies 30.2.2.10
Parking structures 30.8.2.2.8
Tenability performance criteria 11.2.12.3.2, A.11.2.12.3.2
Arenas ..... 16.2.5.3, 16.3.5.1.3, 32.3.5.2, 32.3.5.3, A.16.3.5.1.3(1); *see also* Assembly occupancies; Grandstands
Wheelchair spaces 12.21.2.1.2, 12.21.2.1.3
Assembly area (accessibility) ..... 12.21, 16.2.5.4, A.16.2.5.4.2 to A.16.2.5.4.4; *see also* Seating
Assistive listening systems 12.16.10, 12.19
Day-care occupancies ..... 18.2.9(2)
Definition 3.3.33.1
Stairways ..... 12.10 Ex. 3
Assembly occupancies ..... Chap. 16; *see also* Restaurants; Special amusement buildings
Accessibility ..... 12.6.2.4 Ex. 2, 16.1.7; *see also* Sports facilities
Building services ..... 16.3.2.1, 16.4.3.2(1), 16.5, 49.2.2.1(1)
Crowd management .....*see* Crowd management
Definition 3.3.424.1, 6.1.2.1, A.3.3.424.1, A.6.1.2.1
Energy efficiency ..... 51.2.1(1)
Enhanced fire compartments D.4.3.3.9
Flood-resistant construction ..... 39.11.1.2.1(1)
General requirements ..... 16.1, 34.1.3.2, Table 34.1.3.2(a), Table 34.3.2.3, A.16.1.2.2 to A.16.1.6
Glazing in 46.7
Height and area requirements ..... Table 7.4.1, Table 15.7.3.8.1.1, 15.7.3.8.1.3
Incidental instruction in .....*see* Educational occupancies
Live loads ..... Table A.35.6.1.2
Malls, areas in 27.4.4.6.2
Means of egress ..... 15.6.2.1.2.3, 15.6.2.1.4.9, 16.2, 16.4.2.1(4), A.16.2.2.3.1(1) to A.16.2.11.1.1
Multiple occupancy ..... 7.4.3.6.5(4), 16.1.2, 16.3.4.1(1), 16.4.4, 17.1.2.2, A.16.1.2.2
Multipurpose ..... 16.3.5.1.3(1), A.16.3.5.1.3(1)
Definition 3.3.425.1.1
Occupancy category for wind, snow, and earthquake ..... Table 35.3.1
Occupancy classification 16.1.3, A.16.1.3
Change of ..... Table 15.7.3.5.1.1, Table 15.7.3.8.1.1, 15.7.3.8.1.3, Table 15.7.3.9.1.1
Occupant load ..... 5.5.4.1, Table 11.3.1.2, 15.5.5.3, 16.1.6, 16.2.2.2.2, 16.2.2.2.3, 16.2.2.2.4, 16.2.3.3.2, 16.2.3.4, 16.2.4.2 to 16.2.4.5, 16.2.5.1.2, 16.2.5.3, 16.3.3.3, 16.3.4.1, 16.3.4.2.3, 16.3.5.1.2, 27.4.4.5.4, A.5.5.4.1, A.16.1.6, A.16.3.4.2.3
Performance-based design option 5.5.4.1, A.5.5.4.1
Protection ..... 16.3, 16.4.5.9, A.16.3.1 to A.16.3.4.2.3; *see also* Sprinkler systems
Rehabilitation of 16.1.1.2
Change of occupancy classification ..... Table 15.7.3.5.1.1, Table 15.7.3.8.1.1, 15.7.3.8.1.3, Table 15.7.3.9.1.1
Change of use requirements 15.7.2.4.1
Modification requirements 15.5.5.3
Reconstruction requirements 15.6.2.1.2.3, 15.6.2.1.4.9
On roofs 35.7.4
Seating .....*see* Seating
Separated occupancies, fire-resistant rated separations for ..... Table 6.2.4.1(a), Table 6.2.4.1(b)
Special provisions ..... 16.4, A.16.4.1.1 to A.16.4.10.2(2)
Unlimited area buildings 7.6.3.2.1, 7.6.3.2.2, 7.6.3.9
Waiting spaces 16.1.6.1
Assistive listening system (ALS) (accessibility)
Definition 3.3.608.1
Assistive listening systems (ALS) (accessibility) 12.16.10, 12.19
Athletic facilities .....*see* Sports facilities
Atmosphere
Common 17.4.3.2, 18.4.3.2
Definition 3.3.40.1
Separate 17.4.3.2, 18.4.3.2
Definition 3.3.40.2
Atriums 8.12.3, A.8.12.3
Change of use ..... 15.7.2.1.1(2)
Definition 3.3.41, A.3.3.41
Escalators in ..... 8.12.5.2(1)
Exit discharge 11.7.2.6
Fire protection systems 1.7.6.3.1.9
Health care occupancies ..... 19.3.7.1.4, 19.3.7.3.1, 19.3.8(2)
Residential board and care occupancies 26.3.3.7.9
Attics ..... 8.14.1.1(1); *see also* Concealed spaces
Access to 5.3.5.5, 49.6
Assembly occupancies ..... 16.3.2.1.2(1)(a)
Definition 3.3.42
Exposed insulation installed on 8.16.3.2
Thermal barriers ..... 48.3.3.4(6)
Ventilation 38.8, A.38.8.1
Auditoriums ..... 16.2.5.3; *see also* Assembly occupancies
Authority having jurisdiction ..... 4.5.1, 4.5.4.1(3); *see also* Appeals, board of; Approved/approvals
Alternative methods, approval of use of 1.5.2, 1.5.3, 1.5.4, 15.1.2.3.1
Building permits issued by .....*see* Permits
Concealed work, action on 1.7.1.4
Definition 3.2.2, A.3.2.2
Delegation of authority 1.7.1.2
Director of building and safety as 1.7.1.1
Fire hazard and unsafe buildings, authority regarding ..... 1.7.5.3.2 to 1.7.5.3.8
Flood-resistant construction, role in C.3

Copyright National Fire Protection Association
Provided by IHS under license with NFPA
No reproduction or networking permitted without license from IHS
Not for Resale

Other authorities having jurisdiction, approvals by 1.7.2, 1.7.6.1.2, C.2.2
Performance-based design option, role in ..... 5.1.3, 5.1.5, 5.1.6.1, 5.5.1.1 to 5.5.1.3, A.5.1.3, A.5.1.5, A.5.5.1.2, A.5.5.1.3
Right of entry 1.7.1.3
Stop-work orders 1.7.7.1
Unlawful occupancy, action on 1.7.7.3
Automatic-closing door .....*see* Door
Automatic (definition) 3.3.43
Automatic fire extinguishing systems .....*see* Extinguishing systems
Automatic teller machines (accessibility) 12.20
Awnings ..... 32.4, 35.7.4.2, 48.7.9, Table A.35.6.1.2

-B-

Balconies ..... 11.2.2.7.3.1(1), 11.2.4.4, 11.7.4
Assembly occupancies ..... 16.2.4.3 to 16.2.4.5, 16.3.1(1)
Day-care occupancies ..... 18.3.6(1)
Educational occupancies ..... 17.2.5.4.2(1), 17.2.5.7, A.17.2.5.7
Egress capacity 11.3.1.1, 11.3.1.6
Exterior 11.5.3, 37.2.2, 37.3.7
Definition 3.3.45, 35.2.3
Doors, floor level of 11.2.1.3.6
Live loads ..... Table A.35.6.1.2
Projection over public right of way 13.4
Handrails 15.6.2.1.9.1
Number of means of egress from 11.4.1.1
Residential board and care occupancies ..... 26.2.2.2(3), 26.3.3.4.8.2, A.26.2.2.2(3)
Smokeproof enclosures, access to 11.2.3.6, 11.2.3.7
Wood ..... 45.6.9.4.1(2), 45.6.9.6.13
Barricades (definition) 3.3.46, A.3.3.46
Barrier-free use 4.1.5.2
Barriers
Enhanced fire compartment D.5
Definition D.1.6.3
Fire barriers .....*see* Fire barriers
Fire barrier walls .....*see* Fire barrier walls
Fishing piers and platforms 12.45.11.3.1
Golf facilities 12.45.12.3.2
Means of egress 11.1.10.2.2
Pools, preventing access to 32.8.4
Smoke .....*see* Smoke barriers
Thermal .....*see* Thermal barriers
Vehicle barriers, loads on ..... 35.6.5, Table A.35.6.1.2
Weather-resistive 37.3.1
Base flood elevation .....*see* Flood elevation
Base floods .....*see* Floods
Basements .....*see also* Foundations
Building area, allowable 7.4.2.2
Concrete walls 41.2
Definition 3.3.50
Flood resistance (definition) ..... 3.3.50.1, 39.2.2; *see also* Flood-resistant construction
Parking structures 7.4.3.6.5, 7.4.3.6.6, 30.8.3.5.2
Sprinkler systems 55.3.1.7
Basic wind speed *(V)* 35.9.2, A.35.9.2.2
Definition 3.3.51, 35.2.4
Bathing facilities 12.13
Detention and correctional occupancies 12.45.4.2.3
Guest rooms 12.45.3.2.4, 12.45.3.2.5
Health care occupancies 12.45.2.4
Replacement fixtures 15.3.7.2
Residential dwelling units 12.45.5.5
Signs 12.16.8
Unisex ..... 12.13.2.1 Ex., 12.13.2.2
Bathing units, portable ..... 12.13.2.1 Ex. 3
Bathrooms
Doors
Locks ..... 18.2.2.2.7, 22.2.4.5, 23.2.3.4, 26.3.2.1.2(7)
Lodging or rooming houses 23.2.3.2, 23.2.3.4
One- and two-family dwellings 22.2.4.2, 22.2.4.5
Residential board and care occupancies ..... 26.2.2.4.2, 26.2.2.4.5, 26.3.2.1.2(7)
Glazing, door/enclosure ..... 46.5.2.1(5), 46.5.2.1(6)
Health care occupancies 19.3.6.3.1.3, 19.3.6.4.2
Light-transmitting plastic in accessories 48.7.12
Modifications ..... 15.5.5.4.3.5, 15.5.5.5(1)
Bay windows .....*see* Windows
Beams ..... Table 7.2.1.1, 44.2.1.2
Enhanced fire compartments ..... Table D.2.1.1(a), D.2.5.3, D.2.5.5.2, D.2.5.6.2, D.2.7.2.3
Steel 44.3
Type IV construction 7.2.5.3, 7.2.5.5.2, 7.2.5.6.2, D.2.5.3, D.2.5.5.2, D.2.5.6.2
Type V construction D.2.7.2.3
Bearing walls .....*see* Walls
Birth centers A.6.1.11.1
Definition 3.3.55, A.3.3.55
Bleachers ..... 16.2.5.6.2, 32.3.5.3(4), 32.7
Definition 3.3.56, 32.1.3.1
Loads ..... 35.6.2.3.2, 35.6.2.3.3, 35.9.1.3.2(4), 35.9.1.5, Table A.35.6.1.2
Board and care .....*see* Residential board and care occupancies
Boarding piers (accessibility) 12.6.2.10, 12.35.3, 12.45.9.2.2, 12.45.9.3
Definition 3.3.58
Boat slip (accessibility) 12.6.2.10, 12.35, 12.45.9.2.1, 12.45.9.3.1
Definition 3.3.59
Platform (wheelchair) lifts 12.6.7.10
Boatyards .....*see* Marinas and boatyards
Boiler rooms 11.12
Apartment buildings ..... Table 25.3.2.2
Assembly occupancies .... 16.3.2.1.1, 16.3.2.1.2(1)(a), 16.4.3.2(1)
Business occupancies 28.3.2.1, A.28.3.2.1
Day-care occupancies ..... 18.3.2.1(1)(a)
Definition 3.3.534.1
Detention and correctional occupancies ..... Table 21.4.4.7, 21.5.2.3
Detention and correctional residential housing area ..... Table 21.3.2.1
Educational occupancies ..... 17.3.2.1(1)(a)
Fire escape ladders ..... 11.2.9.1(3), 11.2.11.1(3)
Health care occupancies ..... Table 19.3.2.1
Hotels and dormitories ..... 24.3.2.1, Table 24.3.2.3
Rehabilitation of ..... 15.4.8.2, 15.6.2.8, 15.7.3.4.1(4)
Residential board and care occupancies ..... Table 26.3.3.2.2
Boilers
Code, compliance to 15.1.2.4, 15.1.3.1.1, 15.3.1.3, 15.5.1.5, A.15.1.2.4.2, A.15.1.3.1.1
Definition 3.3.60
Renovations 15.4.8
Repairs 15.3.8
Boiling point (definition) 3.3.476.1, A.3.3.476.1
Bowling lanes
Accessibility ..... 12.6.2.11, 12.21.2.1.4 Ex.
Live loads ..... Table A.35.6.1.2
Boxes, electrical ..... 8.8.7.1(2), 8.8.7.1(3), 8.8.7.2, 15.3.5(6)
Boxing or wrestling rings, raised (accessibility) 12.3.13
Bridges ..... 7.1.5.2.5.5, 11.2.4.4, 11.7.4, D.1.5.2.5.5; *see also* Skywalk bridges
Building(s) .....*see also* specific types of buildings
Characteristics and assumptions 5.4.2, 5.4.5, A.5.4.2.1, A.5.4.2.2, A.5.4.5.1, A.5.4.5.3
Definition 3.3.65, 35.2.5, A.3.3.65, D.1.6.1
Design .....*see* Design
Encroachments into public right of way ..... Chap. 13
Special operations, requirements for 6.4
Temporary .....*see* Temporary facilities
Use .....*see* Use
Building and safety, department of ..... 1.7.1.1; *see also* Authority having jurisdiction

Copyright National Fire Protection Association
Provided by IHS under license with NFPA
No reproduction or networking permitted without license from IHS
Not for Resale

Building area ..... 7.1.1.1, 7.4, Table 7.4.1, A.7.4.1.3.7, A.7.4.3.6.3
Definition 3.3.33.2
Maximum area 7.6.2.3, A.7.6.2.3
Permitted increases ..... 7.6, A.7.6.2.1 to A.7.6.2.3.4.2
Unlimited area buildings 7.6.3
Building environment .....*see* Environment
Building height 7.1.1.1, 7.4, A.7.4.1.3.7, A.7.4.3.6.3
Definition 3.3.308.1
High hazard contents 34.3.2.2
Number of stories and 7.4.3, A.7.4.3.6.3
Permitted increases 7.5
Special requirements 7.4.3.6, A.7.4.3.6.3
Building permits .....*see* Permits
Building rehabilitation ..... Chap. 15, 35.16; *see also* Additions; Change of use; Modifications; Reconstruction; Renovations; Repairs; specific occupancies
Building permit process 15.1.3, 15.1.4, A.15.1.3.1.1
Energy efficiency ..... 51.1.1(2)
In flood hazard areas ..... 39.1.1(2)
Building services
Apartment buildings ..... Table 25.3.2.2, 25.5
Assembly occupancies .....*see* Assembly occupancies
Day-care occupancies ..... 18.5, 49.2.2.1(4)
Design/installation 4.4.6
Detention and correctional occupancies ..... 21.5, 49.2.2.1(5)
Educational occupancies ..... 17.5, 49.2.2.1(3)
Flood resistance 39.5.6
Health care occupancies .....*see* Health care occupancies
Hotels and dormitories .....*see* Hotels and dormitories
Industrial occupancies 29.5, 49.2.2.1.1
Lodging or rooming houses 23.5
Mercantile occupancies .....*see* Mercantile occupancies
One- and two-family dwellings 22.4.2, 22.5, 49.2.2.7
Residential board and care occupancies .....*see* Residential board and care occupancies
Storage occupancies .....*see* Storage occupancies
Tents 32.3.6
Building spaces, subdivision of ....*see also* Fire compartments; Smoke compartments
Apartment buildings 25.3.7
Business occupancies 28.3.7
Detention and correctional occupancies ..... 21.3.7, 21.4.4.11, 21.4.4.12, A.21.3.7.1.2 to A.21.3.7.4(1), A.21.4.4.12
Hotels and dormitories 24.3.7
Residential board and care occupancies 26.3.3.7, A.26.3.3.7.10
Built-up roofing ..... 38.4.2.1.2, 38.4.2.2.2, 38.9.3, A.38.9.3.2 to A.38.9.4.5
Definition 3.3.66, 38.1.1.1
Bulkheads 22.2.7
Definition 3.3.68
Bulk merchandising retail buildings 27.1.1.3, 27.4.5
Definition 3.3.65.5
Bulk oxygen systems facilities 6.4.2.53
Bulk storage elevators ..... 11.2.9.1(1), 11.2.11.1(1), 30.7, A.30.7
Bulk storage of tires 30.3.5.2
Business occupancies ..... Chap. 28
Building services ..... 28.5, 49.2.2.1(2)
Definition 3.3.424.2, 6.1.11.1, A.3.3.424.2, A.6.1.11.1
Doors 11.2.1.4.1.6
Energy efficiency ..... 51.2.1(10)
Flood-resistant construction ..... 39.11.1.2.1(6)
General requirements ..... 28.1, 34.1.3.2, Table 34.1.3.2(c), Table 34.3.2.3, A.28.1.1.1(3)
Height and area requirements ..... Table 7.4.1, Table 15.7.3.8.1.1
Incidental instruction in .....*see* Educational occupancies
Live loads ..... 35.6.2.3.1.1, Table A.35.6.1.2
Means of egress 28.2
Means of escape 28.2.2.10, 28.2.2.11
Multiple occupancy ..... 6.2.1.3(1), 7.4.3.6.5(4), 19.1.2.3, 28.1.2, A.19.1.2.3, A.28.1.2.2.2(4)
Occupancy classification 28.1.3
Change of ..... Table 15.7.3.5.1.1, Table 15.7.3.8.1.1, Table 15.7.3.9.1.1
Occupant load .... Table 11.3.1.2, 28.1.6, 28.2.3, 28.2.3.3, 28.2.4.3, 28.2.4.4, 28.2.5.3.2, 28.2.9.1, 28.3.4.1, A.28.2.3.2
Protection 28.3
Rehabilitation of ..... Table 15.7.3.5.1.1, Table 15.7.3.8.1.1, Table 15.7.3.9.1.1, 28.1.1.1, 28.1.1.2, A.28.1.1.1(3)
Separated occupancies, fire-resistant rated separations for ..... Table 6.2.4.1(b)
Special provisions 28.4, A.28.4.2
Unlimited area buildings 7.6.3.2.1, 7.6.3.4

-C-

Cable and ball wrecking A.14.1
Cables and cable trays, penetrations for ..... 8.8.2, 8.8.7, A.8.8.2.2.1(1)
Canopies 32.4, 35.7.4.2, 48.7.9
Definition 3.3.70
Live loads ..... Table A.35.6.1.2
Motor fuel-dispensing facility 32.4.5
Protective, at construction site A.14.1
Carbon dioxide extinguishing systems ..... Table 55.5.1
Carpets .....*see* Interior finish, Floors
Carts and buggies, shopping 27.2.5.7, A.27.2.5.7
Categories of rehabilitation work (definition) 3.3.72
Catwalks ..... 12.3.4, 16.2.2.3.2, 16.2.2.8.2, 16.2.3.2.3, 16.2.4.6, 16.3.1(2), 16.4.5.7, 16.4.5.8
Cavity wall .....*see* Walls
Ceiling limits (definition) 3.3.354.1, A.3.3.354.1
Ceiling radiation dampers .....*see* Dampers
Ceilings .....*see also* Plenums
Finish .....*see* Interior finish
Floor-ceiling and roof-ceiling assemblies 8.6
Gypsum-board systems, shear values 47.2.1.4.2
Height 49.5.1
Light-diffusers in 48.7.4, A.48.7.4.1
Portland cement plaster 47.4.3.2.6
Smoke partitions terminated at ..... A.8.10.2(2)
Cellular or foamed plastic .....*see* Plastic
Cellulose nitrate motion picture film storage 6.4.2.9, 16.4.6.1
Central control stations, high-rise buildings 33.2.4.2.4, 33.2.5, A.33.2.5
Change machines (accessibility) 12.28
Change of occupancy classification ..... 1.3.4(1), 1.7.5.1, 15.7.1.2, 15.7.3, A.15.7.3.7.3; *see also* Change of use
Definition 3.3.77, 15.2.2.6
Electrical requirements 15.7.3.10
To equal or lesser hazard 15.7.3.4, 15.7.3.5.1.2, 15.7.3.8.2, 15.7.3.9.2, 15.7.3.9.3.6
Exterior wall fire resistance ratings 15.7.3.9
Fire and life safety 15.7.3.5
Heights and areas 15.7.3.8, 15.10.5.2
To higher risk category 15.7.3.5.1.1, 15.7.3.8.1, 15.7.3.9.1
Historic buildings 15.10.5
Part change 15.7.3.2
Plumbing requirements 15.7.3.11
Risk category change ..... 15.7.3.3.1 to 15.7.3.3.4
Sprinkler systems 15.7.3.7, A.15.7.3.7.3
Structural evaluation 15.1.5
Change of use ..... 1.3.4(1), 4.5.6, 15.1.1.1, 15.1.1.4, 15.7, A.4.5.6, A.15.7.2.2.3, A.15.7.3.7.3; *see also* Change of occupancy classification
Accessibility 15.7.2.3
Compliance to codes ..... 15.1.2, A.15.1.2.2.2 to A.15.1.2.4.2
Definition 3.3.636.2, 15.2.2.5, A.3.3.636.2
Electrical systems 15.7.2.4
Light and ventilation 15.7.2.7
Mechanical systems 15.7.2.5
Plumbing systems 15.7.2.6
Special use and occupancy 15.7.2.1

Copyright National Fire Protection Association
Provided by IHS under license with NFPA
No reproduction or networking permitted without license from IHS
Not for Resale

Structural requirements 15.1.5, 15.7.2.2, A.15.7.2.2.3
Checkout aisles 12.16.11, 12.27.2, 12.27.3
Checkout stands 27.2.5.6
Chemicals
Laboratories using 6.4.2.33
Ventilation systems in spaces using 49.2.3
Children's use (accessibility) .....*see* Use
Chimneys ..... 8.14.2.1(6), 32.11, 37.3.2(3), 43.9
Definition 3.3.80
Chutes, rubbish and laundry 6.4.2.34, 8.17
Apartment buildings 25.5.4
Assembly occupancies 16.5.4
Business occupancies 28.5.4
Day-care occupancies 18.5.4
Detention and correctional occupancies 21.5.4
Educational occupancies 17.5.4
Health care occupancies 19.5.4
Ambulatory health care occupancies 20.5.4
Hotels and dormitories 24.5.4
Industrial occupancies 29.5.4
Mercantile occupancies 27.5.4
Residential board and care occupancies 26.3.6.4
Storage occupancies 30.5.4
Parking structures 30.8.5.4
Circulation path (accessibility) (definition) 3.3.81
Cladding .....*see* Components and cladding
Clean agent extinguishing systems ..... Table 55.5.1
Cleanrooms .....*see also* Semiconductor fabrication facilities
Buildings with 6.4.2.11
Definition 3.3.94
Closed-circuit telephone (accessibility) 12.17.1
Definition 3.3.96
Closed system use .....*see* Use
Closets
Doors, locks on 18.2.2.2.6, 22.2.4.4, 23.2.3.3, 26.2.2.4.4, A.18.2.2.2.6
Sprinklered ..... 23.3.6.2 Ex., 25.3.5.5
Clothes dryers ..... 12.14.1, 12.14.3, 15.3.5(6)
Coal preparation plants 6.4.2.12
Definition 3.3.469.1, A.3.3.469.1
Coal tar ..... 38.4.2.1.2, 38.5.2.3, Table 38.9.3.1
Definition 3.3.98, 38.1.1.2
Coastal areas, alterations in C.2.8
Coat hooks
Dressing, fitting, or locker rooms 12.22.2
Toilet rooms 12.13.3.7
Code
Definition 3.2.3, A.3.2.3
Enforcement .....*see* Enforcement of code
Equivalency to .....*see* Equivalency (to code)
Provisions in excess of 4.5.3
Purpose of 1.2, A.1.2
Scope of 1.1, A.1.1
Title 1.1.2
Collapse prevention .....*see* Structural failure, safety from
Columns ..... Table 7.2.1.1.2, 7.2.7.5, 7.2.7.12
Enhanced fire compartments ..... Table D.2.1.1(a), D.2.5.3, D.2.5.5.1, D.2.5.6.2, D.2.7.5, D.2.7.12
Type IV construction 7.2.5.3, 7.2.5.5.1, 7.2.5.6.2, D.2.5.3, D.2.5.5.1, D.2.5.6.2
Type V construction D.2.7.5, D.2.7.12
Wood, protection against decay and termites 45.6.9.6.8, 45.6.9.6.11
Combination fire/smoke dampers .....*see* Dampers
Combustible dust .....*see* Dust
Combustible liquids ..... 6.3.2.4.3(1), 6.3.2.4.4(2), 16.3.2.1.2(1)(c), 16.3.2.1.2(2)(d), 34.1.1.2, Table 34.1.3.1
Assembly occupancies ..... 16.3.2.1.2(1)(c), 16.3.2.1.2(2)(d), Table 34.1.3.2(a)
Business occupancies ..... Table 34.1.3.2(c)
Class II combustible liquid .... Table 34.1.3.1, Tables 34.1.3.1.2(a) to (h), 34.3.2.5.4, Table 34.3.7.2.1.2(A)
Definition 3.3.360.1.1
Class IIIA combustible liquid ..... Table 34.1.3.1, Tables 34.1.3.1.2(a) to (h), 34.3.2.5.4, Table 34.3.7.2.1.2(A)
Definition 3.3.360.1.2
Class IIIB combustible liquid ..... Table 34.1.3.1, Tables 34.1.3.1.2(a) to (h), Table 34.3.7.2.1.2(A)
Definition 3.3.360.1.3
Day-care occupancies ..... 18.3.2.1(1)(c), 18.3.2.1(2)(d), Table 34.1.3.2(e)
Definition 3.3.360.1, A.3.3.360.1
Detention and correctional occupancies ..... Table 34.1.3.2(g)
Dipping and coating process facilities using 6.4.2.19
Educational occupancies ..... 17.3.2.1(1)(c), 17.3.2.1(2)(d), Table 34.1.3.2(d)
Health care occupancies ..... Table 34.1.3.2(b), Table 34.1.3.2(f)
Industrial occupancies 34.1.3.3.3
Parking structures ..... 30.8.3.2.1(1)
Residential occupancies ..... Table 34.1.3.2(h)
Semiconductor manufacturing operations ..... Table 34.3.7.2.1.2(A)
Storage, handling, or use, facilities for ..... 6.4.2.26; *see also* Liquid storage rooms
Ventilation 34.3.2.5.1.1, 34.3.2.5.4
Combustible material .....*see also* Limited-combustible material
Above-deck components, roof assembly 38.3.2, A.38.3.2
Assembly occupancies, storage in 16.3.2.1.2
Balconies and similar projections 37.2.2.3
In concealed spaces 8.14.3
Construction sites, storage at A.14.1
Day-care occupancies ..... 18.3.2.1, A.18.3.2.1(2)(a)
Definition 3.3.388.1
Educational occupancies 17.3.2.1
Enhanced fire compartments D.2.3.2.13, D.2.4.1
Spray application facilities using 6.4.2.60
Towers ..... 31.6.5.1(5)
Type I and Type II construction 7.2.3.2.13, D.2.3.2.13
Combustible particulate solids facilities 6.4.2.13
Combustion (definition) 3.3.103
Combustion engines, buildings housing 6.4.2.14
Common atmosphere .....*see* Atmosphere
Common paths of travel 11.5.1.1.4, 11.5.4.1.4, 11.12.1, A.11.5.1.6
Accessibility ..... 12.7 Ex. 1
Apartment buildings 25.2.5.3
Assembly occupancies 16.2.5.1.2, 16.4.2.6
Business occupancies 28.2.4.2, 28.2.4.5, 28.2.5.3
Day-care occupancies 18.2.5.3
Definition 3.3.105, A.3.3.105
Detention and correctional occupancies ..... 21.2.4.1(2), 21.2.5.3, 21.4.4.4
Educational occupancies 17.2.5.3
Hotels and dormitories ..... 24.2.5.3 to 24.2.5.5
Industrial occupancies ..... Table 29.2.5.1
Mercantile occupancies 27.2.5.3
Malls 27.4.4.5.5.1
Residential board and care occupancies 26.3.2.4.2
Storage occupancies 30.8.2.5.1
Common use .....*see* Use
Communicating openings 19.1.1.4.1.1, 19.1.2.4
Communicating space ..... 8.12.2, 11.1.3.2.1.8, A.8.12.2(7)
Communications centers
Emergency 6.4.2.21
Occupancy category for wind, snow, and earthquake ..... Table 35.3.1
Communications systems
Areas of refuge 11.2.12.2.5, 11.2.12.2.6, A.11.2.12.2.6
Detention and correctional occupancies 12.32.2.3, 21.5.1.2
Elevators 11.2.13.8, A.11.2.13.8
Guest rooms 12.24.4, 12.45.3.3
Health care occupancies 19.5.1.2
High-rise buildings 33.2.1, 33.2.5.4, 33.2.5.5, A.33.2.1.1
Penetrations .....*see* Penetrations

--`,,```,,,,````-`-`,,`,,`,`,,`---
Copyright National Fire Protection Association
Provided by IHS under license with NFPA
No reproduction or networking permitted without license from IHS
Not for Resale

Residential dwelling units 12.33.3.2, 12.45.5.2, 12.45.5.6
Semiconductor manufacturing operations 34.3.7.3.7.4
Towers 31.6.12
Two-way, accessibility of 12.30
Vermin proofing B.2.5
Voice communication/public address systems .....*see* Alarms and alarm systems
Compartmentation ... 4.4.7.3; *see also* Building spaces, subdivision of
Compartments .....*see also* Building spaces, subdivision of; Fire compartments; Smoke compartments
Of fire origin, spread of fire from 5.2.2.2, A.5.2.2.2
Occupancy change, compartment areas for 15.7.3.8.1.2, 15.10.5.2
Complex rehabilitation project involving multiple codes 15.1.3.1, A.15.1.3.1.1
Definition 3.3.108
Components (definition) .... 3.3.109, 35.2.6; *see also* Means of egress, Components
Components and cladding
Definition 3.3.110, 35.2.7
Performance-based design option 5.5.3.2
Composite wood structural panels .....*see* Wood structural panels
Compressed gas
Compressed natural gas (CNG) vehicular fuel systems, buildings housing 6.4.2.10
Definition 3.3.270.1, A.3.3.270.1
Facilities for 6.4.2.16
Compressed gas containers (definition) 3.3.119.2
Computer processing facilities 6.4.2.18
Concealed spaces 8.14
Combustibles in 8.14.3
Draft stops 8.14.1
Fire barrier walls and 8.4.4.2
Fireblocks 8.14.2
Insulation in 8.16.2
Limiting fire spread 4.4.7.2
Moisture, control of 5.2.11.2
Performance-based design option 5.5.2.4, A.5.5.2.4
Reroofing, created during 15.4.2.9
Smoke barriers through 8.11.2.2, 8.11.2.3
Thermal barriers 48.3.3.3
Type IV construction 7.2.5.1, 7.2.5.2, 7.2.5.4, D.2.5.3
Concealed work, inspection of 1.7.1.6, 1.7.6.6.3.1
Concrete ..... Chap. 41, 47.4.1.4
Cast-in-place 36.5.8, 40.3.7, 41.1.2, 41.2, 41.8.1.2, 41.8.2.1, 41.8.3.2
Chimneys and fireplaces 32.11, 43.9
Composite slabs on steel decks 44.6.2
Construction documents 41.3
Control joints A.8.9
Fire resistance rating 8.2.3.2.2
Floors 7.2.5.6.4
Footings .....*see* Footings
Foundation walls, thickness of ..... 36.6.2.1 to 36.6.2.3, 36.6.2.7
Glass fiber reinforced panels ..... 48.4.1.8.3(2)
Gypsum concrete, reinforced 41.8
Penetrations filled with ..... 8.8.2.2.1(3)
Piles, piers, and caissons .....*see* Foundations
Plain ..... Table 36.6.2.2(a)
Definition 3.3.114.1, 35.2.8.1
Precast 36.5.5, 36.5.6, 41.2, 41.8.1.3
Quality assurance programs 40.2.4, 41.4
Cast-in-place construction 40.3.7
Precast concrete 40.3.8
Radon protection 49.2.5.3.3.2
Reinforced ..... Tables 36.6.2.2(b) to (d)
Definition 3.3.114.2, 35.2.8.2
Deflection limits, structural members 35.1.2.8.2
Retaining walls 36.9.3
Roof coverings ..... 38.2.1.2(2), 38.2.1.2(3), 38.4.2.1.1, 38.5.2.3, 38.9.4, Table 38.9.4.1, A.38.9.4.5
Roof decks 38.3.2, A.38.3.2
Seismic requirements 41.5
Shotcrete 41.7
Slabs-on-ground 39.8.2, 41.2.1, 41.6
On steel farm decks 41.2.2
Swimming pools 32.8.3.1, 32.8.3.3
Thermal barriers ..... 48.3.3.4(1)
Towers 32.14.1.2
Wood used with ..... 45.6.9.6.4 to 45.6.9.6.6, 45.6.9.6.8, 45.6.9.6.11, 45.6.9.6.12, 45.6.10
Condominiums A.22.1.1.2
Conduits
Penetrations for ..... 8.8.2, 8.8.7, A.8.8.2.2.1(1)
Structural members, placement in 7.2.7.11
Vermin proofing B.2.5
Connectors/connections, wood 45.5.17, 45.6.8
Construction ..... 4.5.5; *see also* Start of construction (flood resistance)
Accessibility of site 12.3.2
Actual start of construction (flood resistance)
Definition 3.3.115.1.1, A.3.3.115.1.1
Definition 3.3.115
Health care occupancies, operations at 19.1.1.4, A.19.1.1.4.3
Multitenant buildings 1.7.6.3.5
Quality assurance during .....*see* Quality assurance
Safety during ..... 4.1.3.3.2.3, Chap. 14
Performance-based design option 5.2.4.2, 5.5.4.2
Special .....*see* Special construction
Construction documents 1.7.6.3, 35.4
Approval 1.7.6.3.2.1, 1.7.6.3.3, 1.7.6.3.4
Concrete 41.3
Definition 3.3.116, A.3.3.116
Examination of 1.7.6.3.2
Flood-resistant construction 39.12.2
Masonry 43.4
Modification of 1.7.6.3.2.2
Multitenant buildings 1.7.6.3.5
Requirements 1.7.6.3.1
Rough-in 1.7.6.3.5.1
Construction joints .....*see* Joints
Construction requirements
Apartment buildings 25.1.5
Assembly occupancies 16.1.5, 16.4.5.1, 16.4.5.2
Business occupancies 28.1.5
Control areas 34.2.4.2
Day-care occupancies 18.1.5
Detention and correctional occupancies 21.1.6, 21.4.4.2
Educational occupancies 17.1.5, A.17.1.5.2
Grandstands and bleachers 32.7.3
Health care occupancies 19.1.6, 19.3.5.2
Ambulatory health care occupancies 20.1.6
High-rise buildings 33.1.3
Hotels and dormitories 24.1.6
Industrial occupancies 29.1.5
Lodging or rooming houses 23.1.5
Mercantile occupancies 27.1.5
Mall buildings 27.4.4.3, A.27.4.4.3.5.2
One- and two-family dwellings 22.1.5
Residential board and care occupancies 26.1.5, 26.2.1.2, 26.3.1.2, A.26.1.5
Roof structures 32.13.4
Storage occupancies 30.1.5
Parking structures 30.8.1.6
Wood 45.6, A.45.6.9.6.16
Construction types 7.1.1, 7.2, A.7.2.1.1
Assembly occupancies ..... Table 16.1.5.2, 16.4.5.2.2
Awnings and canopies 32.4.2
Definition 3.3.117
Enhanced fire compartment requirements and ..... 7.1.1.2, Annex D
Health care occupancies 19.1.6.3
Multiple types
Height of building and 7.4.3.4

Copyright National Fire Protection Association
Provided by IHS under license with NFPA
No reproduction or networking permitted without license from IHS
Not for Resale

Unseparated 7.4.2.3
Type I ..... 7.2.1, 7.2.3, 7.4.3.5, 7.4.3.6.5(1), 7.4.3.6.6(1), 7.4.3.6.7.1, 8.14.3, A.7.2.1.1
Assembly occupancies 16.4.5.2.2
Awnings and canopies 32.4.2.1
Enhanced fire compartments D.2.1.1, D.2.3, D.7.5
Exterior walls 37.4.2, 37.4.4
Fire wall terminations 8.3.3.6.4
Foam plastic insulation 48.4.1.1.2
Health care occupancies 19.1.6.2, 19.1.6.3, 19.3.5.2
Mall 27.4.4.3.1, 27.4.4.3.2.1
Mercantile occupancies ..... 27.4.4.3.4(1)
Parking structures 30.8.1.6.6.1
Ramps ..... 11.2.5.4.1(2)
Roofing assemblies 38.3.2, A.38.3.2
Roof structures 32.13.2.1
Sloped glazing and skylights ..... 46.8.4(1)
Towers ..... 31.6.5.1(3)
Type II ..... 7.2.1, 7.2.3, 7.4.3.5, 7.4.3.6.4, 7.4.3.6.6(1), 7.4.3.6.7.1, 7.6.3.7, 7.6.3.8, 8.14.3, A.7.2.1.1
Awnings and canopies 32.4.2.1
Enhanced fire compartments D.2.1.1, D.2.3, D.7.5
Exterior walls 37.4.2, 37.4.4
Fire wall terminations 8.3.3.6.4
Foam plastic insulation 48.4.1.1.2
Health care occupancies ..... 19.1.6.2, 19.1.6.3, 19.3.5.2, 20.1.6.2(1), 20.1.6.3
Mall 27.4.4.3.1, 27.4.4.3.2.1
Mercantile occupancies ..... 27.4.4.3.4(1)
Parking structures 30.8.1.6.6.1, 30.8.1.6.6.2
Ramps ..... 11.2.5.4.1(2)
Roofing assemblies ..... 38.2.2(2), 38.3.2, A.38.3.2
Roof structures 32.13.2.1
Sloped glazing and skylights ..... 46.8.4(1)
Towers ..... 31.6.5.1(3)
Type III ..... .1.6.2(1), 7.2.1, 7.2.4, 7.6.3.7, 8.16.2.2, A.7.2.1.1
Awnings and canopies 32.4.2.2
Balconies and other projections 37.2.2.3
Enhanced fire compartments D.2.1.1, D.2.4
Exterior walls 37.4.2, 37.4.4
Fire wall terminations 8.3.3.6.5
Foam plastic insulation 48.4.1.1.2
Grandstands 32.7.5
Health care occupancies ..... 20.1.6.2(1)
Mall 27.4.4.3.1, 27.4.4.3.2.1
Parapet wall requirement ..... 37.1.3.1(6)
Roof covering classification ..... 38.2.2(2)
Roof structures 32.13.2.2
Type IV 7.2.1, 7.2.5, 7.4.3.6.7.1, 7.6.3.7, 8.16.2.2, A.7.2.1.1
Awnings and canopies 32.4.2.2
Balconies and other projections 37.2.2.3
Enhanced fire compartments D.2.1.1, D.2.5
Exterior walls 37.4.2, 37.4.4
Fire wall terminations 8.3.3.6.5
Foam plastic insulation 48.4.1.1.2
Grandstands 32.7.5
Interior finishes 10.3.1.1
Mall 27.4.4.3.1, 27.4.4.3.2.1, 27.4.4.3.2.2
Parapet wall requirement ..... 37.1.3.1(6)
Roof structures 32.13.2.2
Towers ..... 31.6.5.1(3)
Type V ..... 7.2.1, 7.2.6, 8.16.2.2, 20.1.6.2(1), A.7.2.1.1, D.2.6, D.6.4
Awnings and canopies 32.4.2.2
Balconies and other projections 37.2.2.3
Educational occupancies 17.1.5.3
Enhanced fire compartments D.2.1.1
Fire wall terminations 8.3.3.6.5
Foam plastic insulation 48.4.1.1.4
Grandstands 32.7.5
Health care occupancies ..... 20.1.6.2(1)
Light-transmitting plastic glazing 48.7.7.1
Parapet wall requirement ..... 37.1.3.1(6)
Plastic veneer 48.6.3
Roof covering classification ..... 38.2.2(2)
Roof structures 32.13.2.2
Underground structures 7.4.3.5
Consumer fireworks ..... *see* Fireworks
Containers ...*see also* Aerosol containers; Compressed gas containers
Flammable or combustible liquids ..... 6.3.2.4.3(1), 6.3.2.4.4(2)
Oxidizers ..... 6.3.2.4.3(5), 6.3.2.4.4(7)
Containment, hazardous material 34.3.2.8
Contaminants, control of ..... 4.1.4.1.2.1, 4.1.4.3, 49.2.2.1.2; *see also* Exhaust systems; Ventilation
Performance-based design option 5.2.6, A.5.2.6.1, A.5.2.6.2
Contents and furnishings
Definition 3.3.120
Hazard of ..... *see* Hazard of contents
Continuous gas detection system 34.3.7.3.4
Definition 3.3.608.3
Contractors
Definition 3.3.122
Quality assurance programs, role in 40.2.6, 40.2.9
Control areas 34.2.4, 34.3, A.34.3.2.6, A.34.3.7.3.8.4
Definition 3.3.33.3
Control joints ..... *see* Joints
Conveyors ..... 54.10; *see also* Vertical openings
Apartment buildings 25.5.3
Assembly occupancies 16.5.3
Business occupancies 28.5.3
Day-care occupancies 18.5.3
Detention and correctional occupancies 21.5.3
Educational occupancies 17.5.3
Exhaust systems for ..... 50.1(5)
Health care occupancies 19.5.3
Ambulatory health care occupancies 20.5.3
Hotels and dormitories 24.5.3, A.24.5.3.2
Industrial occupancies 29.5.3
Inspection ..... 1.7.6.6.3.4(N)(1)
Laundry 6.4.2.34
Lodging or rooming houses 23.5.3
Mercantile occupancies 27.5.3
Openings to exits 54.4
Parking structures 30.8.5.3
Residential board and care occupancies 26.2.5.3, 26.3.6.3
Service openings for 8.12.5.1
Cooking equipment/facilities, commercial ..... 15.7.3.4.6, 49.2.4, 50.1(6), 55.10
Apartment buildings 25.3.9
Assembly occupancies 16.3.2.2
Buildings housing 6.4.2.15
Business occupancies 28.3.2.2, A.28.3.2.2
Day-care occupancies 18.3.2.2
Detention and correctional occupancies ..... Table 21.4.4.7
Detention and correctional residential housing area ..... Table 21.3.2.1, 21.3.2.4
Educational occupancies 17.3.2.2
Health care occupancies 19.3.2.5, A.19.3.2.5.2
Ambulatory health care occupancies 20.3.2.3, A.20.3.2.3.2
Lodging or rooming houses 23.3.7
Mercantile occupancies 27.3.2.2
Modifications 15.5.6.4
Residential board and care occupancies 26.3.3.8, A.26.3.3.8
Coolers ..... *see* Refrigerating equipment
Cooling systems ..... *see* Air-conditioning systems
Cooling towers 32.9
Cornices 37.2.1
Corridors
Apartment buildings ..... 25.2.3.3, 25.2.3.4, 25.2.4.3(3), 25.2.5.2, 25.2.5.4, 25.2.6.1, 25.2.6.2, 25.3.3.2(2), 25.3.3.3.2, 25.3.4.1.3(2), 25.3.6
Assembly occupancies 16.3.6
Business occupancies 28.2.5.2, 28.3.6, A.28.3.6.1

--`,,```,,,,````-`-`,,`,,`,`,,`---
Copyright National Fire Protection Association
Provided by IHS under license with NFPA
No reproduction or networking permitted without license from IHS
Not for Resale

Day-care occupancies ..... 18.2.9(1), 18.3.3.2(1), 18.3.3.3, 18.3.6, 18.6.2.5.3, 18.6.3.3.2.1
Dead-end 11.5.1.6, 15.6.1.3.2, 15.6.2.1.5, A.11.5.1.6
Apartment buildings 25.2.5.4
Assembly occupancies 16.2.5.1.3
Business occupancies 28.2.5.2
Day-care occupancies 18.2.5.2, 18.6.2.5.3
Detention and correctional occupancies 21.2.5.2
Educational occupancies 17.2.5.2
Health care occupancies 19.2.5.2
High hazard contents 34.3.2.4.4
Hotels and dormitories 24.2.5.6, 24.2.5.7
Industrial occupancies ..... Table 29.2.5.1, 29.6.4
Mercantile occupancies 27.2.5.2, 27.4.4.5.3
Occupancy classification, change of ..... 15.7.3.5.1.1(6)
Residential board and care occupancies 26.3.2.4.3
Storage occupancies 30.6.4, 30.8.2.5.2
Detention and correctional occupancies ..... 21.2.3.2, 21.2.5.1, 21.2.5.2, 21.3.3.2, 21.3.3.3.2, 21.3.6, Table 21.4.4.12
Doors .....*see* Doors
Educational occupancies 17.2.5.2, 17.2.5.5, 17.2.5.7, 17.3.3.3, 17.3.6, A.17.2.5.7
Exit access .....*see* Exit access
Hazardous production materials (HPM) piping in 34.3.7.3.1.2, 34.3.7.3.1.3, 34.3.7.3.6.1
Health care occupancies ..... 19.2.5.6.3.2, 19.3.2.6(1), 19.3.3.2.2, 19.3.4.5.2, 19.3.4.5.3, 19.3.6, A.19.2.5.6.3.2(B), A.19.2.5.6.3.2(C), A.19.3.4.5.3, A.19.3.6.1(3) to A.19.3.6.3.5
Ambulatory health care occupancies 20.2.1, 20.2.3.2, 20.3.3.2, 20.3.3.3.2, 20.3.6, A.20.3.6.1
Nonsprinklered buildings 19.4.3.5.2.2, 19.4.3.6
Historic buildings 15.10.4.4, 15.10.4.6, 15.10.5.5
Hotels and dormitories ..... 24.2.3.3, 24.2.4.2(3), 24.2.5.2, 24.2.5.6, 24.2.5.7, 24.2.6, 24.3.3.2(2), 24.3.3.3.2, 24.3.4.8, 24.3.6, A.24.2.3.3
Industrial occupancies 29.3.3.3.2, 29.3.6, 29.6.4
Interior finish .....*see* Interior finish
Live loads ..... Table A.35.6.1.2
Mercantile occupancies 27.2.5.2, 27.3.6, A.27.3.6.1
Malls 27.4.4.5.3
Occupancy classification, change of 15.7.3.5.1.1
One- and two-family dwellings 22.2.6
Openings in ..... 15.6.2.1.4.4, 15.6.2.1.4.5, 15.7.3.4.2(1), 15.7.3.5.1.1(5); *see also* Transoms
Residential board and care occupancies ..... 26.2.2.2(1), 26.2.3.6, 26.3.2.2.3, 26.3.2.4.3, 26.3.3.3.2(2), 26.3.3.3.3.2, 26.3.3.4.8, 26.3.3.6, 26.3.3.7.11, A.26.3.3.6
Semiconductor fabrication areas ..... 34.3.7.2.1.3(A), 34.3.7.2.2, 34.3.7.2.3
Service corridors 34.3.7.2.3, 34.3.7.3.1.2, 34.3.7.3.3.2, 34.3.7.3.6.1
Definition 3.3.549
Storage occupancies 30.3.3.3.2, 30.3.6, 30.6.4, 30.8.2.5.2
Parking structures 30.8.3.3.3.2, 30.8.3.6
Corrosion resistance
Definition 3.3.526.2
Metal roof panels 38.9.7.1.2
Screens 46.8.3.4
Corrosive material ..... 6.3.2.4.5(1), 34.1.1.2, Table 34.1.3.1
Assembly occupancies ..... Table 34.1.3.2(a)
Business occupancies ..... Table 34.1.3.2(c)
Day-care occupancies ..... Table 34.1.3.2(e)
Definition 3.3.388.2, A.3.3.388.2
Detention and correctional occupancies ..... Table 34.1.3.2(g)
Educational occupancies ..... Table 34.1.3.2(d)
Floors, high hazard contents storage rooms 34.3.2.9
Health care occupancies ..... Table 34.1.3.2(b), Table 34.1.3.2(f)
Mercantile and storage occupancies ..... Table 34.1.3.3.1(b)
Residential occupancies ..... Table 34.1.3.2(h)
Semiconductor manufacturing operations ..... Table 34.3.7.2.1.2(A)
Ventilation of ..... 34.3.2.5.1, 49.2.2.1.4 to 49.2.2.1.8
Courtrooms .....*see* Judicial facilities
Courts
Definition 3.3.126
Detention and correctional occupancies 21.2.7.1
Enclosed (definition) 3.3.126.1
Exit discharge 11.7.1.1
Smokeproof enclosures 11.2.3.5
Food 27.4.4.6.2
Definition 3.3.126.2, 27.4.4.2.3
Outside stairs in ..... 11.2.2.7.4(1)
Court sports (accessibility) 12.6.2.12
Covered mall .....*see* Mall; Mall buildings
Crane loads 35.6.8
Crawl spaces ..... 12.3.4, 45.6.9.6.8(2), 49.2.5.3.3.9, 49.2.5.3.3.10, 49.2.5.3.4, 49.2.5.3.5.6; *see also* Attics
Critical radiant flux (definition) 3.3.128, A.3.3.128
Cross slope (accessibility) (definition) 3.3.129
Crowd management ..... 4.1.3.3.2.2, 5.2.4.1, 16.2.5.4.3, 16.4.1.2(2), A.16.2.5.4.3
Performance-based design option 5.5.4.1, A.5.5.4.1
Cryogenic fluid ..... 6.3.2.4.3(3), 6.3.2.4.4(8), Table 34.1.3.1, Tables 34.1.3.2(a) to (h)
Definition 3.3.130
Explosion control ..... Table 34.3.2.6
Semiconductor manufacturing operations ..... Table 34.3.7.2.1.2(A)
Cultural heritage ... 4.1.6.2, 5.2.8, A.4.1.6.2, A.5.2.8.2; *see also* Historic buildings
Cultural resource properties 6.4.2.17
Definition 3.3.131
Curtains
Educational occupancies 17.5.5.1
Fire curtains, proscenium 16.4.5.6

-D-

Dalle glass .....*see* Glass
Dampers
Alarm systems 55.2.3.2.2
Ceiling radiation 8.8.8.3, 8.8.8.6, 8.10.5.3
Definition 3.3.133.1
Combination fire/smoke ..... 8.8.8.3, 8.10.5.3, 8.11.6.2.2, 8.11.6.4, 11.2.4.3.4(2)
Definition 3.3.133.2
Detention and correctional occupancies 21.2.2.5.3, 21.4.4.3, A.21.4.4.3
Fire ..... 8.3.2.10.1 to 8.3.2.10.4, 8.4.6.2, 8.6.2.3, 8.8.8.2, 8.8.8.3, 8.10.5.3, A.8.8.8.2
Access to 8.8.8.4, 8.10.5.4
Actuation device 8.8.8.5, A.8.8.8.5
Definition 3.3.133.3, A.3.3.133.3
Smoke ..... 8.8.8.3, 8.10.5.2, 8.10.5.3, 8.11.6.2 to 8.11.6.7, 11.2.12.3.4.4
Access to 8.8.8.4, 8.10.5.4, 8.11.6.5
Definition 3.3.133.4
Detention and correctional occupancies 21.3.7.9
Health care occupancies 19.3.7.3.2, A.19.3.7.3.2
Ratings 8.10.5.5, 8.11.6.6
Smoke detectors, use of 8.10.5.6, 8.11.6.7
Smokeproof enclosure ventilation systems ..... 11.2.3.8(2), 11.2.3.8(4)
Dampproofing, foundation 36.8
Dangerous
Buildings .....*see* Unsafe buildings
Definition 3.3.134
Dash-bond coat (of plaster) 47.4.1.4.2
Definition 3.3.135, 47.1.5.1
Data conversion (definition) 3.3.136
Data processing facilities 6.4.2.18

Copyright National Fire Protection Association
Provided by IHS under license with NFPA
No reproduction or networking permitted without license from IHS
Not for Resale

Day-care homes 18.6
Definition 3.3.320.1, A.3.3.320.1
Energy efficiency 51.5.1
High hazard contents ..... Table 34.3.2.3
Means of escape 18.6.2
Occupancy classification, change of 15.7.3.5.1.3
Rehabilitation of 18.6.1.1.1
Separated occupancies, fire-resistant rated separations for ..... Table 6.2.4.1(a), Table 6.2.4.1(b)
Day-care occupancies ..... Chap. 18
Accessibility 18.1.7
In apartment buildings 18.1.2.2
Building services ..... 18.5, 49.2.2.1(4)
Definition 3.3.424.3, 6.1.4.1, A.3.3.424.3, A.6.1.4.1
Energy efficiency 51.5
Flexible plan and open plan educational or day-care buildings ..... 18.2.9(3), 18.4.3
Definition 3.3.65.8, A.3.3.65.8
Flood-resistant construction ..... 39.11.1.2.1(3)
General requirements ..... 18.1, 34.1.3.2, Table 34.1.3.2(e), Table 34.3.2.3
Height and area requirements ..... Table 7.4.1, Table 15.7.3.8.1.1
Means of egress 18.2, 18.4.3.2, 18.6.2.5, A.18.2.2.2.6
Multiple occupancy 18.1.2, 18.6.1.2
Occupancy category for wind, snow, and earthquake ..... Table 35.3.1
Occupancy classification 18.1.3, 18.6.1.4
Change of ... Table 15.7.3.5.1.1, 15.7.3.5.1.3, Table 15.7.3.8.1.1
Occupant load ..... Table 11.3.1.2, 18.1.6, 18.4.3.2, 18.6.1.7
In places of worship 18.1.1.6, 18.6.1.1.5
Protection ..... 18.3, 18.6.3, A.8.3.1.1 to A.8.3.3.10.4
Rehabilitation of 18.1.1.2, 18.6.1.1.1
Change of occupancy classification ..... Table 15.7.3.5.1.1, 15.7.3.5.1.3, Table 15.7.3.8.1.1
Reconstruction requirements 15.6.2.8.1, 15.6.2.8.2
Self-preservation ..... *see* Self-preservation
Separated occupancies, fire-resistant rated separations for ..... Table 6.2.4.1(a), Table 6.2.4.1(b)
Special provisions 18.4
Dead-end corridors ..... *see* Corridors
Dead-ends, fire department access roads 7.1.5.2.5.4, D.1.5.2.5.4
Dead load ..... *see* Loads
Decks
Definition 3.3.140, 35.2.9
Patio ..... 37.2.2, 37.3.2(6), 37.3.7, Table A.35.6.1.2
Roof ..... *see* Roof decks
Decorative glass ..... *see* Glass
Defend in place 4.1.3.1.2.1, 5.2.2.4, 5.2.4.3
Deferred submittals 40.2.11
Definition 3.3.142
Definitions ..... Chap. 3, 6.1, 6.2.2, 15.2, 24.2.1.3, 27.4.4.2, 30.8.1.3, 31.5.1, 32.1.3, 35.2, 38.1.1, 39.2, 40.1.3, 44.1.1, 45.2, 47.1.5, 48.2, A.6.1.2.1 to A.6.1.13.1, A.27.4.4.2.1, A.27.4.4.2.2, A.32.1.3.3 to A.32.1.3.11, A.39.2.13, A.39.2.20.1, A.44.1.1.3.2, A.45.2.2, A.45.2.6, A.47.1.5.9.2, A.48.2.2 to A.48.2.4.2, C.5, D.1.6
Deflagration 6.3.2.4.3
Definition 3.3.143
Demolition
Definition 3.3.144
Fire hazard or unsafe buildings 1.7.5.3.2
Permit for 1.7.6.2.5
Safety during ..... 4.1.3.3.2.3, 5.2.4.2, 5.5.4.2, Chap. 14
Depositories (accessibility) 12.28
Depressurization system
Active sub-slab 49.2.5.3.5.8
Definition 3.3.608.4.1
Passive sub-slab 49.2.5.3.5
Definition 3.3.608.4.2
Sub-membrane 3.3.608.4.3, 49.2.5.3.4, 49.2.5.3.5.8
Design ..*see also* Performance-based design option; Structural design
Allowable stress design ..... 35.1.2.1, 43.3(1), 45.4.1, A.45.4.1.1
Definition 3.3.146.1, 35.2.2
Proposed design
Definition 3.3.146.2, A.3.3.146.2
Evaluation of 5.6, 5.8.13
Independent review of 5.1.3, A.5.1.3
Strength design 35.1.2.1, 35.1.2.2
Definition 3.3.146.3, 3.3.595.1, 35.2.31
Design earthquake ..... 35.4.2.5; *see also* Earthquake(s); Loads, Seismic
Definition 3.3.147, 35.2.10
Spectral response acceleration ... 35.4.2.5(1), 35.4.2.5(3), 35.10.5
Design fire scenario ..... *see* Fire scenario
Design flood ..... *see* Flood
Design flood elevation ..... *see* Flood elevation
Design loads ..... *see* Loads
Design pressure *(p)* 11.2.3.9.1, A.11.2.3.9.1
Definition 3.3.151, 35.2.11
Design specification (definition) 3.3.579.1, A.3.3.579.1
Design strength (definition) ..... 3.3.594.1, 35.2.12; *see also* Design
Design team (definition) 3.3.154
Detached buildings ..... 34.3.3.2, 34.3.4.4, 34.3.5.4 to 34.3.5.6
Definition 3.3.65.6
Detection devices ..... *see also* Smoke detectors
Detention and correctional occupancies 21.3.4.2, 21.4.4.9.1
Door closers 8.7.4
Health care occupancies 19.3.4.2.1, A.19.3.4.2.1
Residential board and care occupancies ..... 26.3.3.4.6(2)
Detection systems ..... 55.2.2.1.5, 55.2.2(2), 55.2.2.3 to 55.2.2.5, A.55.2.2.1.5
Assembly occupancies ..... 16.3.4.2.3, 16.3.6(5), 16.4.3.3.4, 16.4.5.4.1.2(2), 16.4.7.4 to 16.4.7.6, A.16.3.4.2.3
Business occupancies ..... 28.3.4.2(2)
Day-care occupancies 18.3.4.5, 18.6.3.4
Detention and correctional occupancies 21.3.4.2, 21.3.4.3.1.2, 21.3.4.3.2.2, 21.3.4.4, 21.4.4.9.1, 21.4.4.9.2, 21.4.5.2.3, A.21.3.4.3.1.2, A.21.3.4.4
Educational occupancies ..... 17.2.5.4.2(2), 17.3.4.2.3.1, A.17.3.4.2.3.1
Gas detection 34.3.7.3.4, 34.3.7.3.6.3
Health care occupancies ..... 19.2.5.6.1.3(C)(2), 19.2.5.6.2.1(C), 19.3.4.2.1, 19.3.4.5, 19.3.6.1(1), A.19.3.4.2.1, A.19.3.4.5.3
Ambulatory health care occupancies ..... 20.3.7.2(1)
High-rise buildings 33.2.5.5
Hotels and dormitories ..... 24.3.4.2(4), 24.3.4.8
Industrial occupancies ..... 29.3.4.2(2)
Means of egress and ..... 11.2.1.6.1, 11.2.1.8.2(5), 11.2.1.10.4(3), 11.2.1.14(5), 11.2.3.4, A.11.2.1.6.1.6
Mercantile occupancies ..... 27.2.2.2.5, 27.3.4.2(2)
Malls 27.4.4.9
One- and two-family dwellings 22.3.4.2
Reconstruction requirements 15.6.2.6.3
Residential board and care occupancies ..... 26.2.3.2.3(1), 26.2.3.2.4(1), 26.3.3.4.2(4), 26.3.3.4.8
Semiconductor manufacturing operations ..... Table 34.3.7.2.4.6, 34.3.7.3.7.4
Storage occupancies ..... 30.3.4.2(2)
Parking structures ..... 30.8.3.4.2(2)
Towers 31.6.12
Detention and correctional occupancies ... Chap. 21; *see also* Holding cells; Judicial facilities
Accessibility ..... 12.3.7, 12.6.2.3.1 Ex. 3, 12.32, 12.45.4
Areas of refuge ..... 12.7 Ex. 2
Communication features 12.32.2.3
Entrances for inmates or detainees 12.6.4.9
Signs ..... 12.16.1 Ex. 4
Stairways ..... 12.10 Ex. 1
TTYs 12.17.4.8
Building services ..... 21.5, 49.2.2.1(5)
Definition 3.3.424.4, 6.1.7.1, A.3.3.425.4, A.6.1.7.1
Doors ..... *see* Doors

Copyright National Fire Protection Association
Provided by IHS under license with NFPA
No reproduction or networking permitted without license from IHS
Not for Resale

Energy efficiency ..... 51.2.1(5)
Flood-resistant construction ..... 39.11.1.2.2(2)
General requirements ..... 21.1, Table 34.1.3.2(g), Table 34.3.2.3, A.21.1.1.4 to A.21.1.3.3(2)
Height and area requirements ..... Table 7.4.1, Table 15.7.3.8.1.1, 15.7.3.8.1.3, 15.7.3.8.3
Live loads ..... Table A.35.6.1.2
Lockups ..... *see* Lockups
Means of egress ..... 21.1.2.2, 21.1.2.4, 21.2, 21.3.7.1.1, 21.3.7.1.2(1), 21.4.4.4, 21.4.4.5, 21.4.4.6.3, A.21.1.2.2.2, A.21.2.4.2 to A.21.2.11.7
Mezzanines 8.13.1.2
Multiple occupancy 21.1.2, A.21.1.2
Nonresidential uses 6.1.7.2, A.6.1.7.2
Occupancy category for wind, snow, and earthquake . Table 35.3.1
Occupancy classification
Change of ..... 15.7.3.4.4, Table 15.7.3.5.1.1, Table 15.7.3.8.1.1, 15.7.3.8.1.3, 15.7.3.8.3, Table 15.7.3.9.1.1
Use conditions ..... 21.1.3, A.21.1.3.1 to A.21.1.3.3(2)
Occupant load .... Table 11.3.1.2, 21.1.7, 21.3.7.2(1), 21.4.4.11(1)
Protection ..... 21.1.1.5, 21.3, 21.4.4.6 to 21.4.4.13, 21.4.5.2.3, 21.4.5.2.4, A.21.3.1(2) to A.21.3.8, A.21.4.4.6.2 to A.21.4.4.13.2(2)
Rehabilitation of 21.1.1.2
Change of occupancy classification ..... 15.7.3.4.4, Table 15.7.3.5.1.1, Table 15.7.3.8.1.1, 15.7.3.8.1.3, Table 15.7.3.9.1.1
Modifications 15.5.2.3, 15.5.5.3
Nonsprinklered buildings ..... 21.4.4, A.21.4.4.3 to A.21.4.4.13.2(2)
Reconstruction 15.6.2.1.4.11
Separated occupancies, fire-resistant rated separations for ..... Table 6.2.4.1(a), Table 6.2.4.1(b)
Special provisions ..... 21.4, A.21.4.3 to A.21.4.4.13.2(2)
Detention and correctional residential housing area ..... 21.1.3.3, 21.2.10.2, 21.3.1(2), 21.3.7.1.2(3), A.21.1.3.3(2), A.21.3.1(2)
Communicating space, vertical openings ..... 8.12.2(4)
Definition 3.3.33.4
Subdivision of 21.3.8, 21.4.4.12, A.21.3.8, A.21.4.4.12
Vertical openings 21.4.4.6.1
Detonation (detonatable)
Definition 3.3.158
Hazard 6.3.2.4.2
Development
Definition 3.3.159, A.3.3.159
Flood resistance (definition) ..... 3.3.159.1, 39.2.4, C.5.1; *see also* Flood-resistant construction
Devices ..... *see* Alarms and alarm systems; Detection devices; Escape devices or systems; Special industrial explosive devices (SIED); Stair descent device
Dining surfaces 12.26
Dipping and coating process facilities using flammable or combustible liquids ..... 6.4.2.19, 15.7.2.4.1(6)
Dispensing
Definition 3.3.161
Fuel dispensing devices 30.8.2.5.3
Fuel dispensing facilities ..... 6.4.2.45, 15.7.2.4.1(4), 32.4.5
Display fireworks ..... *see* Fireworks
Diving boards and diving platforms, raised (accessibility) 12.3.14
Documentation ..... *see also* Construction documents
Fill, use of 36.2.4.3
Fire protection systems 55.1.5
Flood hazard areas, construction in 39.12, C.2.9
Historic buildings, rehabilitation of 15.10.1.2
Inspection reports 1.7.6.6.4
Performance-based design option ..... 5.8, A.5.8.1 to A.5.8.11
Quality assurance program reports 40.2.8, 40.2.10
Tests 55.11.3, 55.11.4
Door assemblies ..... 11.2.1.1.1; *see also* Fire door assemblies
Definition 3.3.36.1
Horizontal sliding doors ..... 11.2.1.14(5)
Smoke control, air leakage rate for A.11.2.1.1.4
Smoke door assemblies 11.2.1.1.4, A.11.2.1.1.4
Doors ..... 11.2.1, 11.7.4, A.11.2.1.1.3 to A.11.2.1.9.1; *see also* Elevator lobby doors; Exits; Fire doors
Access-controlled egress 11.2.1.6.2, A.11.2.1.6.2
Apartment buildings 25.2.2.2.2.3
Assembly occupancies ..... 16.2.2.2.3(2), 16.2.2.2.6
Business occupancies 28.2.2.2.5
Health care occupancies ..... 19.2.2.2.4(3), 20.2.2.2.2
Hotels and dormitories 24.2.2.2.2.3
Industrial occupancies 29.2.2.2.3
Mercantile occupancies 27.2.2.2.5
Residential board and care occupancies ..... 26.2.2.4.6.2, 26.3.2.1.2(5)
Storage occupancies 30.2.2.2.3
Accessible 12.6.5, 12.45.1, 12.45.3.4
Apartment buildings ..... 25.2.2.1.2, 25.2.2.2, 25.2.4.2(1), 25.2.6.1 to 25.2.6.3, 25.3.1.1.4, 25.3.4.1.3(1), 25.3.6.2 to 25.3.6.4, 25.3.6.6, A.25.2.2.2.2.1
Areas of refuge ..... 11.2.12.3.4.2, 11.2.12.3.4.3, 11.2.12.3.5(1)
Assembly occupancies 16.2.2.2, 16.4.3.3.1, 16.4.6.4
Atriums ..... 8.12.3(1), A.8.12.3(1)(b)
Automatic-closing ..... 8.7.3, 8.7.4, 8.10.3.5, 8.15.3, 11.2.1.8, 11.2.1.14(5), A.8.7.3, A.11.2.1.8.1
Definition 3.3.163.1
Elevator lobby doors 11.2.13.4
Health care occupancies ..... 19.3.7.7(2), 20.3.6.2(3), 20.3.7.7(2)
Horizontal exits 11.2.4.3.9
Lodging or rooming houses 23.2.2.1, 23.3.5.7
Reconstruction requirements 15.6.2.1.4.8
Residential board and care occupancies ..... 26.2.2.3.1, 26.2.3.2.3, 26.2.3.2.4(1), 26.2.3.6.5(3), 26.3.3.7.17, A.26.3.3.7.17
Shaft opening protectives 15.7.3.6.4
Smokeproof enclosures ..... 11.2.3.4, 11.2.3.7(1), 11.2.3.11
Balanced 11.2.1.13
Break out opening 12.45.1, 12.45.3.4
Business occupancies 28.2.2, A.28.2.2.2.2
Chutes 8.17.3
Closure .... 11.2.1.8.1, 55.2.5.2(1), A.11.2.1.8.1; *see also* Self-closing doors; subhead, Automatic-closing
Day-care occupancies 18.2.2.2.3
Detectors for 55.2.3.2.3
Educational occupancies 17.2.2.2.4
Health care occupancies 19.1.1.4.1.2, 19.1.1.4.1.3, 19.2.2.2.7, 19.2.2.2.8, 19.3.6.3.3, 19.3.6.3.4, 20.2.2.2.4, 20.2.2.2.5, A.19.2.2.2.7, A.19.3.6.3.3
Lodging or rooming houses ..... 23.3.5.5 to 23.3.5.7
Residential board and care occupancies 26.2.3.6.5, 26.3.3.6.5
Corridor ..... 15.6.2.1.4.3, 15.7.3.4.2(1)
Educational occupancies 17.2.5.5
Health care occupancies ..... 15.5.2.2.3 to 15.5.2.2.5, 15.7.3.4.3(1), 19.3.6.3, 19.4.3.6.2, 20.3.6.2, A.19.3.6.3
Day-care occupancies 18.2.2.2, A.18.2.2.2.6
Detention and correctional occupancies ..... 11.2.1.2.4(4), 11.2.1.4.4.3, 21.2.2.2, 21.2.5.1, 21.2.11, 21.3.7.1.3, 21.3.7.4(2), 21.3.7.6, 21.3.7.7, 21.4.5.1.4(1), 21.4.5.2.2, A.21.2.11.4, A.21.2.11.7
Dutch 19.3.6.3.6
Dwarf/smash, aircraft hangars 29.6.2.4, 30.6.2.4
Educational occupancies 17.2.2.2, 17.2.5.4, 17.2.5.5
Exit access doors, distance between ..... 11.5.1.4, 16.2.3.4.2, A.11.5.1.4.2; *see also* Exits, Remotely located
Exit enclosures ..... 11.1.3.2.1.4 to 11.1.3.2.1.6, A.11.1.3.2.1.5, A.11.3.2.1.6(2)
Fire barriers 8.15.3, 11.2.12.3.4, 19.1.1.4.1.2, 19.1.1.4.1.3, A.11.2.12.3.4
Flashing ..... 37.3.2(2)
Floor levels on both sides of 11.2.1.3
Guest rooms, transient lodging 12.24.1.2

Copyright National Fire Protection Association
Provided by IHS under license with NFPA
No reproduction or networking permitted without license from IHS
Not for Resale

Hazardous production material (HPM) rooms 34.3.7.2.4.3
Health care occupancies ..... 19.2.2.2, 19.2.2.5.3, 19.2.3.5, 19.2.4.2(1), 19.2.5.5.1, 19.2.5.5.3, 19.2.5.5.4, 19.2.5.6.2.4(A), 19.2.5.6.3.2(A), 19.3.1.3, 19.3.6.3, 19.3.7.5 to 19.3.7.10, 19.3.8, A.19.2.2.2.4(2), A.19.2.5.5.1, A.19.3.6.3, A.19.3.7.5 to A.18.3.7.8, A.19.3.8
Ambulatory health care occupancies 20.2.2.2, 20.3.6.2, 20.3.7.1, 20.3.7.7, A.20.3.7.7
To auxiliary spaces 19.3.6.3.1.3, 19.3.6.4.2
High hazard contents areas 34.3.2.4.5
Historic buildings 15.10.4.4, 15.10.4.5, 15.10.5.5, 15.10.5.6
Horizontal exits ... 11.2.4.3.6 to 11.2.4.3.9, 11.2.4.4.7, A.11.2.4.3.8
Hotels and dormitories 12.24.1.2, 24.2.2.1.2, 24.2.2.2, 24.2.4.2, 24.2.5.2, 24.2.6, 24.3.1.1.3, 24.3.6.3, 24.3.6.4
Impediments to egress 11.5.2.2, A.11.5.2.2
Industrial occupancies 11.2.1.4.1.6, 29.2.2.2, 29.2.2.5.2, A.29.2.2.5.2
Locks and latches .....*see* Locks and latches
Lodging or rooming houses 23.2.3, 23.3.5.5, A.23.2.3.6.1
Mercantile occupancies 27.2.2.2, A.27.2.2.2.2
Malls 27.4.4.5.8
Occupancy classification, change of 15.7.3.5.1.1
One- and two-family dwellings ..... 11.2.1.3.5 to 11.2.1.3.7, 22.2.2.3, 22.2.2.4.1, 22.2.2.4.3, 22.2.4, A.22.2.2.4.3, A.22.2.4.7
Partitions
Folding 11.2.1.12
Smoke 8.10.3, A.8.10.3.4
Performance-based design option ..... 5.3.2(3)
Power-operated ..... 11.2.1.2.4(6), 11.2.1.4.4.4, 11.2.1.9, 21.2.11.8(1), 21.2.11.11, A.11.2.1.9
Projection of open door beyond property line 13.5
Reconstruction requirements ..... 15.6.2.1.4, 15.6.2.1.4.7 to 15.6.2.1.4.9
Refrigeration machinery room 50.3.1.3
Residential board and care occupancies ..... 26.2.2.2, 26.2.2.4, 26.2.3.1.3, 26.2.3.2.3, 26.2.3.2.4(1), 26.2.3.6.1(2), 26.2.3.6.5, 26.3.2.1.2, 26.3.3.6.4 to 26.3.3.6.6, 26.3.3.7.13 to 26.3.3.7.21, A.3.3.7.15 to A.3.3.7.18, A.26.2.2.2(3)
Revolving ..... 11.2.1.2.4(7), 11.2.1.4.1.7, 11.2.1.10, 27.2.2.2.8, 28.2.2.2.8
Apartment buildings 25.2.2.2.3
Assembly occupancies 16.2.2.2.7
Glazing ..... 46.5.2.3(3)
Hotels and dormitories 24.2.2.2.3
Mercantile occupancies 27.2.2.2.8, 28.2.2.2.8
Residential board and care occupancies ..... 26.3.2.1.2(6)
Roof access 4.6.4, A.4.6.4
Screen and storm 11.2.1.4.5
Self-closing .....*see* Self-closing doors
Semiconductor fabrication areas ..... 34.3.7.2.1.3(A)
Sliding ..... 11.2.1.4.1.1, 11.2.1.4.1.3 to 11.2.1.4.1.5, 11.2.1.9.1.5, 11.2.1.9.1.7, 11.2.1.14, 11.2.4.3.6
Apartment buildings 25.2.2.2.4
Breakout opening 12.45.1, 12.45.3.4
Detention and correctional occupancies ..... 21.1.2.2.2, 21.2.11.2, 21.2.11.5, 21.2.11.8, 21.3.7.4(2), 21.4.5.2.2(2), A.21.1.2.2.2
Health care occupancies 19.2.2.2.10, 19.2.2.5.3, 19.3.7.5, 19.3.7.8, A.19.3.7.5, A.19.3.7.8
Hotels and dormitories 24.2.2.2.4
Industrial occupancies 29.2.2.5.2, A.29.2.2.5.2
One- and two-family dwellings 22.2.4.6
Residential board and care occupancies ..... 26.2.2.4.3, 26.3.2.1.2(2), 26.3.3.7.15, 26.3.3.7.18, A.26.3.3.7.15, A.26.3.3.7.18
Storage occupancies 30.2.2.5.2, A.30.2.2.5.2
Smoke barriers 8.11.4
Detention and correctional occupancies ..... 21.3.7.2, 21.3.7.4(2), 21.3.7.6, 21.3.7.7, 21.4.4.11
Health care occupancies ..... 19.3.7.5 to 19.3.7.10, 20.3.7.7, A.19.3.7.5, A.19.3.7.5 to A.18.3.7.8, A.20.3.7.7
Residential board and care occupancies ..... 26.3.3.7.13 to 26.3.3.7.21, A.3.3.7.15 to A.3.3.7.18
Smoke partitions 8.10.3, A.8.10.3.4
Smokeproof enclosures ..... 11.2.3.4, 11.2.3.7(1), 11.2.3.8(2), 11.2.3.11
Stages, trap doors in 16.4.5.2.3
Stairway enclosures .....*see* Stairways
Storage occupancies 30.2.2.2, 30.2.2.5.2, 30.6.2.4, A.30.2.2.5.2
Parking structures 30.8.2.2.2
Swing in direction of egress travel ..... 15.6.2.1.4.7, 15.10.4.5, 15.10.5.6, 16.4.10.2(1), 27.2.2.2.7, 50.3.1.3
Swinging ..... 11.2.1.2.1(1), 11.2.1.2.1(4), 11.2.1.2.2(2), 11.2.1.2.3.2, 11.2.4.3.7
Assembly occupancies 16.4.6.4
Breakout opening 12.45.1, 12.45.3.4
Detention and correctional occupancies ..... 21.1.2.2.2, 21.2.11.2, 21.4.5.2.2(1), A.21.1.2.2.2
Glazing ..... 46.5.2.1(1), 46.5.2.1(4)
Health care occupancies ..... 19.2.2.5.3 to 19.2.2.5.5, 19.3.7.5, 19.3.7.8, A.19.3.7.5, A.19.3.7.8
Industrial occupancies 29.2.2.5.2, A.29.2.2.5.2
One- and two-family dwellings 22.2.4.6
Residential board and care occupancies ..... 26.2.2.4.3, 26.3.2.1.2(2), 26.3.3.7.15, 26.3.3.7.16, 26.3.3.7.18, A.26.3.3.7.15, A.26.3.3.7.18
Storage occupancies 30.2.2.5.2, A.30.2.2.5.2
Swing and force to open 11.2.1.4, A.11.2.1.4.1, A.11.2.1.4.3
Vermin proofing B.2.4.1
Thermal barriers ..... 48.3.3.4(7)
Toilet and bathing facilities 12.13.2.2
Turnstiles 11.2.1.11, 16.2.2.2.7, 16.2.2.2.8
Type I and Type II construction ..... 7.2.3.2.13(4)
Vermin proofing B.2.4
Width of ..... 11.2.1.2, 11.3.4.1.2(1), A.11.2.1.2.1, A.11.2.1.2.3
Dormitories .....*see* Hotels and dormitories
Draft stops ..... 8.14.1, 16.3.2.1.2(1)(a), 24.3.5.6, 25.3.5.7, 27.3.1(3)
Definition 3.3.166
Drainage
Roof 13.6, 38.6
Storm C.7.4
Dressing rooms 12.22
Dry chemical extinguishing systems ..... Table 55.5.1
Drycleaning plants 6.4.2.20
Definition 3.3.469.2
Dryers .....*see* Clothes dryers
Dry floodproofing 36.6.1.3.1, 36.6.1.3.2, 39.11.1.2, A.39.11.1.2
Definition 3.3.167, 39.2.5
Ducts and air transfer openings .....*see also* Plenums
Dampers .....*see* Dampers
Elevator machine rooms 54.9.1.1
Enhanced fire compartment barriers D.5.2.2
In fire walls 8.3.1.2, 8.3.2.10
Flood-resistant construction 39.10, 50.2, A.39.10
High hazard materials conveyed by ..... 8.3.2.10.5, 8.3.2.11, 34.3.2.5.7, 34.3.7.2.1.5(A), 34.3.7.3.8.2, 34.3.7.3.8.3, A.8.3.2.11
Insulation ..... 8.16.1.2(2)
Kitchen exhaust systems 15.5.6.4, 15.7.3.4.6
One- and two-family dwellings 22.4.2
Parking structures 30.8.5.2.4
Penetrations for ..... 8.3.2.10, 8.3.2.11, 8.3.3.11, 8.8.8, 11.1.3.2.1.6(3), 11.2.4.3.4(2), 11.2.12.3.4.4, A.8.3.2.11, A.8.8.8.2, A.8.8.8.5
Detention and correctional occupancies 21.2.2.5.3, 21.4.4.3, A.21.4.4.3
Lodging or rooming houses 23.3.5.3
Residential board and care occupancies 26.3.3.7.10, A.26.3.3.7.10
Radon protection 49.2.5.3.3.8
Smoke barriers, ducts and air transfer openings in 8.11.6
Smoke partitions, air transfer openings in 8.10.5

Copyright National Fire Protection Association
Provided by IHS under license with NFPA
No reproduction or networking permitted without license from IHS
Not for Resale

Smokeproof enclosures ..... 11.2.3.8(2), 11.2.3.9.2
Structural members, placement in 7.2.7.11
Tents 32.3.6.4
Dumbwaiters ..... 26.3.6.3, 54.2, 54.4; *see also* Vertical openings
Definition 3.3.169
Dust
Agricultural 6.4.2.2, 30.7.2.1
Definition 3.3.170.1
Combustible ..... 6.3.2.4.3(2)
Definition 3.3.170.2
Explosion control ..... Table 34.3.2.6
Ventilation 34.3.2.5.1
Dwelling units .....*see also* Apartment buildings; One- and two-family dwellings; One-family dwellings; Two-family dwellings
Accessibility ..... 12.2.3 Ex. 3, 12.6.4.6, 12.6.5.4, 12.16.5 Ex. 2, 12.33, 12.45.5
Definition 3.3.171.3
Platform (wheelchair) lifts 12.6.7.6
Visible alarms 12.15.5
Windows ..... 12.29 Ex. 1
Definition 3.3.171
Doors ..... 11.2.1.2.4(5), 11.2.1.4.2(3), 11.2.2.3.2.5
Multiple occupancies 25.1.2.2, 25.1.2.3
Parking spaces (accessibility) 12.8.2.3.1, 12.8.2.3.2
Rehabilitation of ..... 15.4.4.1, 15.5.5.4.1, 15.5.5.5(1), 15.6.2.6.1.1, 15.7.3.4.5(1)
Sloped glazing, screens for ..... 46.8.3.6(4), 46.8.3.6(5)
Smoke alarms 55.2.2.6.3, 55.2.2.6.4, A.55.2.2.6.3
Stairs/ramps, handrails for 11.2.2.4.1.6
Ventilation systems 49.2.2.7
Walls, glazing in ..... 46.5.2.2(2)

-E-

Earthquake(s) .....*see also* Design earthquake; Seismic design categories
Assembly occupancies ..... 16.4.1.2(7)
Concrete, seismic forces resisted by 41.5
Loads .....*see* Loads, Seismic
Masonry, seismic requirements for 43.8
Steel construction ..... 44.2.2 to 44.2.4, 44.4.2
Educational occupancies .... Chap. 17; *see also* Day-care occupancies
Building services ..... 17.5, 49.2.2.1(3)
Definition 3.3.424.5, 6.1.3.1, A.3.3.424.5, A.6.1.3.1
Energy efficiency ..... 51.2.1(2)
Enhanced fire compartments D.4.3.3.7
Flexible plan and open plan educational or day-care buildings 17.4.3
Definition 3.3.65.8, A.3.3.65.8
Flood-resistant construction ..... 39.11.1.2.1(2)
General requirements ..... 17.1, 34.1.3.2, Table 34.1.3.2(d), Table 34.3.2.3, A.17.1.5.2
Height and area requirements ..... Table 7.4.1, Table 15.7.3.8.1.1, 15.7.3.8.1.2
Incidental instruction 6.1.3.3, 17.1.1.3
Lighting 49.8
Live loads ..... Table A.35.6.1.2
Means of egress 15.6.2.1.4.9, 17.2, 17.4.3.2, A.17.2.5.7, A.17.2.11.1
Multiple occupancies 17.1.2
Occupancy category for wind, snow, and earthquake ..... Table 35.3.1
Occupancy classification 17.1.3
Change of ..... Table 15.7.3.5.1.1, Table 15.7.3.8.1.1, 15.7.3.8.1.2, Table 15.7.3.9.1.1
Occupant load ..... Table 11.3.1.2, 17.1.6, 17.2.2.2.2, 17.4.3.2
Other occupancies associated with 6.1.3.2
Protection ..... 17.3, A.17.3.3.2 to A.17.3.4.3.1.1
Rehabilitation of 17.1.1.2
Change of occupancy classification ..... Table 15.7.3.5.1.1, Table 15.7.3.8.1.1, 15.7.3.8.1.2, Table 15.7.3.9.1.1
Reconstruction requirements 15.6.2.1.4.9
On roofs 35.7.4
Separated occupancies, fire-resistant rated separations for ..... Table 6.2.4.1(a), Table 6.2.4.1(b)
Special provisions 17.4
Unlimited area buildings 7.6.3.7
Egress, means of .....*see* Means of egress
Egress doorways .....*see* Doors
Electrical systems ..... 7.1.2, Chap. 52; *see also* Lighting; Utility services
Change of use requirements 15.7.2.4
Code, compliance to 15.1.2.4, 15.1.3.1.1, 15.3.1.3, 15.5.1.5, A.15.1.2.4.2, A.15.1.3.1.1
Concealed spaces ..... 8.14.3(3)
Day-care occupancies 18.5.1.2
Detention and correctional occupancies 21.5.1.2
Elevators 11.2.13.7, A.11.2.13.7
Flood-resistant construction 39.10, 52.2, A.39.10
Health care occupancies .....*see* Health care occupancies
Inspection ..... 1.7.6.6.3.4(J)
Membrane structures 32.2.1.3
One- and two-family dwellings 22.4.2
Penetrations .....*see* Penetrations
Performance-based design option 5.3.9
Permits 1.7.6.1.1.2
Plans 1.7.6.3.1.4
In plenums 7.2.3.2.15.1, D.2.3.2.15.1
Rehabilitation of
Modifications 15.5.1.3.2, 15.5.1.3.4, 15.5.1.3.5, 15.5.1.5, 15.5.5
Occupancy classification, change of 15.7.3.10
Renovations 15.4.4.1.2, 15.4.4.2.2, 15.4.4.3.2
Repairs 15.3.5
Semiconductor fabrication areas 34.3.7.3.2
Tents 32.3.6.1, 32.3.6.7
Vermin proofing B.2.5
Weight of equipment (dead load) 35.5.2
Electroluminescent 3.3.173, 16.4.7.7.2
Definition A.3.3.173
Electronic computer/data processing facilities 6.4.2.18
Elements
Accessibility (definition) ..... 3.3.174.1; *see also* Accessible (accessibility)
Load-bearing (definition) ..... 3.3.174.2; *see also* Beams; Columns; Floors; Girders; Roof assemblies/roofs; Trusses; Walls
Structural .....*see* Structural elements
Elevated platforms .....*see* Platforms
Elevated walkways 12.6.4.3
Elevation differences, fire walls at 8.3.2.6, A.8.3.2.6.1, A.8.3.2.6.2
Elevator evacuation systems 11.2.13.2, 11.2.13.10
Definition 3.3.608.5
Elevator lobbies 11.2.13.3
Capacity 11.2.13.2.2
Definition 3.3.368.1
Exit, access to 11.4.1.6
Elevator lobby doors 11.2.13.4
Definition 3.3.163.2
Elevator machine rooms/machinery spaces ... 54.5, Table A.35.6.1.2
Elevators ..... 8.12.5.4, Chap. 54; *see also* Bulk storage elevators; Dumbwaiters; Escalators
Accessible means of egress 11.5.4.5, 12.6.6, 12.16.7, 12.33.2.3
Alarm systems 55.2.3.2.1, 55.2.3.5.4, 55.2.3.6.6
Ambulance stretcher accommodation 54.3
Apartment buildings 25.5.3
Area of refuge, exit from 11.2.12.2.2, 11.2.12.2.4, A.11.2.12.2.4
Assembly occupancies 16.5.3
Building rehabilitation
Code, compliance to 15.1.2.4, 15.1.3.1.1, 15.3.1.3, 15.5.1.5, A.15.1.2.4.2, A.15.1.3.1.1
Modifications ..... 15.5.5.5(4)
Reconstruction 15.6.2.5.6, 15.6.2.7.2
Renovations 15.4.4.2.3, 15.4.4.3.4, 15.4.9
Repairs 15.3.9

Copyright National Fire Protection Association
Provided by IHS under license with NFPA
No reproduction or networking permitted without license from IHS
Not for Resale

Business occupancies 28.5.3
Day-care occupancies 18.5.3
Detention and correctional occupancies 21.5.3
Doors at point of access to 11.4.1.5
Educational occupancies 17.5.3
Firefighters emergency operation ..... 11.2.12.2.4(1), 11.2.13.9, 15.6.2.7.2, 54.5, A.11.2.13.9
Flood resistance 54.8, A.54.8
Health care occupancies 19.5.3
Ambulatory health care occupancies 20.5.3
High-rise buildings ..... 33.2.4.2.4, 33.2.4.2.4(3)
Hoistways ..... *see also* Shafts; Vertical openings
Enclosures 54.7
Number of cars in 54.6
Vents 54.9
Hotels and dormitories 24.5.3, A.24.5.3.2
Industrial occupancies 29.5.3
Inspection ..... 1.7.6.6.3.4(N)(1)
Lodging or rooming houses 23.5.3
Mercantile occupancies 27.5.3
Malls 27.4.4.5.9.2, A.27.4.4.5.9.2
Openings to exits 54.2
Permits 1.7.6.1.1.2
Recall ..... 15.6.2.5.6, 55.2.3.2.1, 55.2.5.2(5)
Residential board and care occupancies 26.2.5.3, 26.3.6.3
Signs ..... 11.2.13.11, 11.10.8.4, 12.16.7, A.11.10.8.4(1), A.11.10.8.4(2)
Smoke compartments 16.4.3.3.2
Storage occupancies 30.5.3
Parking structures 30.8.5.3
Towers 11.2.13, 31.6.3.2, A.11.2.13
Wheelchair (platform) lifts 12.6.7, 54.11
Emergency alarm systems ..... *see* Alarms and alarm systems
Emergency communications centers 6.4.2.21
Emergency control station 34.3.7.2.5
Emergency forces notification 55.2.4, A.55.2.4.3
Business occupancies 28.3.4.3.2
Day-care occupancies 18.3.4.4
Detention and correctional occupancies ..... 21.3.4.3.2, 21.4.5.2.4(4)
Educational occupancies 17.3.4.3.2
Health care occupancies 19.3.4.3.2
Ambulatory health care occupancies 20.3.4.3.2
Hotels and dormitories 24.3.4.7, A.24.3.4.7
Mercantile occupancies 27.3.4.3.2
Bulk merchandising retail buildings 27.4.5.4.4
Malls 27.4.4.10.3.2
Residential board and care occupancies ... 26.3.3.4.6, A.26.3.3.4.6
Emergency lighting ..... *see* Lighting
Emergency power
High hazard contents area 34.3.2.7
Semiconductor fabrication facilities 34.3.7.3.7
Emergency response personnel, characteristics and assumptions 5.4.4
Employee work area ..... *see* Work area
Enclosed courts ..... *see* Courts
Enclosures ..... *see also* Fire barriers; Shafts
Arenas/stadiums 32.3.5.2, 32.3.5.3
Design flood elevation, below .... 39.11, A.39.11.1.1 to A.39.11.2.1
Elevator hoistways 54.7
Elevator machine rooms/machinery spaces 54.5.3
Exhausted (definition) 3.3.182.1, A.3.3.182.1
Exit ..... *see* Exit enclosures
Exit passageways 11.2.6.2
Occupancy classification, change of 15.7.3.5.1.1
Parking structures 7.4.3.6.5, 7.4.3.6.6, D.6.6, D.6.7
Ramps 11.2.5.6
Residential board and care occupancies hazardous areas ..... 26.2.3.2.3(1), 26.2.3.2.4(1)
Smokeproof ..... *see* Smokeproof enclosures
Stairways ..... *see* Stairways
Storage areas 27.3.2.1.2
Vertical openings ..... 4.4.5, 8.12.1.2 to 8.12.1.5, A.8.12.1.2
Apartment buildings 25.3.1.1.1, 25.3.1.1.4
Building rehabilitation ..... 15.6.2.3, 15.7.3.4.3(2), 15.7.3.4.4(2), 15.7.3.6
Business occupancies 28.3.1.1.1
Mercantile occupancies 27.3.1
Residential board and care occupancies 26.3.3.1.1
End walls 8.3.2.16.2, A.8.3.2.16.2.1
Energy efficiency ..... 4.1.6.1, Chap. 51
Additions 15.8.7
Commercial occupancies 51.2, 51.5.2, 51.6.2
Day-care occupancies 51.5
Historic buildings 15.10.1.5
Manufactured homes 51.4
Performance-based design option 5.3.6
Residential board and care occupancies 51.6
Residential occupancies 51.3, 51.4, 51.5.1, 51.6.1
Enforcement of code ..... 1.7, A.1.7.5.3.1.1(10), A.1.7.6.6.3.4(C), A.1.8.6.6.3.4(C); *see also* Appeals, board of; Authority having jurisdiction; Permits
Appeals, board of ..... *see* Appeals, board of
Compliance of buildings and structures ..... 1.7.5, 4.5.4.2, A.1.7.5.3.1.1(10)
Emergency action 1.7.5.3.7
Flood-resistant construction C.1.4
Liability for 1.7.4
Organization 1.7.1
Engines, combustion, buildings housing 6.4.2.14
Enhanced fire compartment barriers D.5
Definition D.1.6.3
Enhanced fire compartments
Construction types and ..... 7.1.1.2, Annex D
Definition D.1.6.2
Entrances
Accessibility 5.2.2.7
Definition 3.3.184
Doors, doorways and gates 12.6.5.1
Residential unit 12.45.5.6.5, 12.45.5.6.6
Public entrance (accessibility) 12.6.4
Assembly occupancies 15.6.2.1.2.3, 16.2.3.3, 16.2.7.2, 16.2.7.3
Definition 3.3.184.1
Historic buildings ..... 12.2.5 Ex., 12.6.4 Ex. 2
Play areas (accessibility) 12.6.4
Reconstruction 15.6.2.1.2.3
Signs 12.16.6
Restricted entrance (accessibility) 12.6.4.7
Definition 3.3.184.2
Service (accessibility) 12.6.4.8
Definition 3.3.184.3
Entry, right of 1.7.1.3
Environment
External 4.1.6.4, A.4.1.6.4.2
Interior ..... *see* Interior environment
Performance-based design option 5.2.10, 5.3.5
Equipment or fixtures ..... *see also* Air-conditioning systems; Boilers; Building services; Electrical systems; Elevators; Fire protection systems; Heating systems; Maintenance of equipment, devices, systems and features; Mechanical systems; Pressure vessels; Refrigerating equipment; Ventilation
Definition 3.3.185, A.3.3.185
Flood resistance 39.5.6
Weight of (dead load) 35.5.2
Equivalency (to code) ... 1.5, 5.3.3; *see also* Performance-based design option
Approval of alternatives ..... 1.5.2 to 1.5.4, 15.1.2.3, A.15.1.2.3.2
Building rehabilitation 15.1.2.2, A.15.1.2.2.2
Definition 3.3.186
Permitted alternatives 1.5.3
Tests to prove equivalency 1.5.3

Copyright National Fire Protection Association
Provided by IHS under license with NFPA
No reproduction or networking permitted without license from IHS
Not for Resale

Escalators 8.12.5.2, 8.12.5.3, 11.2.7, 11.7.4, 11.8.1.1, 11.9.1.2, 54.2, A.11.8.1.1
Apartment buildings 25.5.3
Assembly occupancies 16.5.3
Building rehabilitation ..... 12.6.2.3.2, 15.5.5.5(4)
Business occupancies 28.5.3
Day-care occupancies 18.5.3
Detention and correctional occupancies 21.5.3
Educational occupancies 17.5.3
Health care occupancies 19.5.3
Ambulatory health care occupancies 20.5.3
Hotels and dormitories 24.5.3, A.24.5.3.2
Industrial occupancies 29.5.3
Lodging or rooming houses 23.5.3
Mercantile occupancies 27.5.3
Parking structures ..... 7.4.3.6.5(2), 30.8.5.3
Permits 1.7.6.1.1.2
Residential board and care occupancies 26.2.5.3
Smoke compartments 16.4.3.3.2
Escape devices or systems 11.13.1, A.11.13.1
Definition 3.3.608.7, A.3.3.608.7
Essential facilities (definition) 3.3.204.2, 35.2.13.1
Ethylene oxide facilities 6.4.2.22
Evacuation 4.1.3.1.2.1
Alarms for ..... *see* Notification
Assembly occupancies ..... 16.3.4.3.5(2), 16.4.3.5
Detention and correctional occupancies 21.1.1.5
Educational occupancies ..... 17.3.4.2.3.1(4), 17.3.4.2.3.2(2)
Health care occupancies 19.1.1.3
Occupant response characteristics ..... 5.4.3, 5.8.5, A.5.4.3.1 to A.5.4.3.6
Performance-based design option 5.2.2.4, 5.2.4.3
Residential board and care occupancies 26.1.3
Supplemental evacuation equipment 11.13, A.11.13.1
Towers, elevators in ..... 11.2.13.1(6)
Excavations 36.2, 36.4.1.2
Exercise machines and equipment (accessibility) 12.6.2.9.12, 12.36, 12.45.10
Exhausted enclosures ..... *see* Enclosures
Exhaust systems ..... 49.2.2.1.3; *see also* Ventilation
For air conveying systems ..... 50.1(5)
Atriums ..... A.8.12.3(6)
Building rehabilitation 15.5.6.3, 15.6.2.7.1, 15.7.3.4.6
Buildings containing, construction of 6.4.2.23
Contaminants, control of 5.2.6, A.5.2.6.1, A.5.2.6.2
Detention and correctional occupancies ..... 21.4.4.13.2(4)
High hazard contents 34.3.2.5, 34.3.2.7.2, 34.3.6.1.2
Parking structures 49.2.2.6
Projection rooms 16.4.6.6.2
Semiconductor fabrication areas 34.3.7.3.3, 34.3.7.3.7.2, 34.3.7.3.7.3, 34.3.7.3.8, A.34.3.7.3.8.4
Smoke compartments 16.4.3.3.3, 16.4.3.4
Exhibits (definition) 3.3.191
Existing (definition) 3.3.192, A.3.3.192
Existing buildings
Application of code to 1.3.4, 15.1.1.2
Definition 3.3.65.7, A.3.3.65.7
Flood resistance 39.13
Definition 3.3.65.7.1, 39.2.3.1
Maintenance of 1.7.5.2
Rehabilitation ..... *see* Building rehabilitation
Exit access 11.1.3.1, 11.3.3.2, 11.5.1.1, 11.5.1.2, 11.5.1.4, 11.5.1.6, 11.5.1.7, 11.7.4, 11.8.1.1, 11.9.1.2, A.11.5.1.1.1, A.11.5.1.4.2, A.11.5.1.6, A.11.8.1.1
Apartment buildings ..... 25.2.5.1, 25.2.5.2, 25.3.3.3.2, 25.3.4.1.3(1), 25.3.6
Assembly occupancies 16.2.3.5, 16.3.3.5
Day-care occupancies 18.3.3.3
Definition 3.3.196
Detention and correctional occupancies 21.2.5.1, 21.2.5.2
Educational occupancies 17.2.3.2, 17.2.5.4, 17.3.3.3
Exterior ways of 11.5.3
Hazardous production material (HPM) facilities 15.6.2.9, 34.3.7.3.1.3, 34.3.7.3.4.4, 34.3.7.3.6.1
Health care occupancies ..... 19.2.1, 19.2.5.5, 19.2.5.6.2.1(A), 19.2.5.6.2.4(A), 19.2.5.6.3.1, 19.2.5.6.3.2(A), 20.2.1, 20.3.6, A.19.2.5.5.1, A.19.2.5.6.2.1(A), A.19.2.5.6.3.1, A.20.3.6.1
Hotels and dormitories ..... 24.2.4.2(3), 24.2.5.1, 24.2.5.2, 24.2.6.3.3(1), 24.3.3.3.2, 24.3.6
Impediments to egress 11.5.2.2, A.11.5.2.2
Industrial occupancies 29.3.3.3.2
Marking 11.10.1.4, A.11.10.1.4
Mercantile occupancies 27.2.5.8, 27.3.6.1, A.27.3.6.1
Malls ..... 27.4.4.5.2.2, 27.4.4.5.5.1, A.27.4.4.5.2.2(3), A.27.4.4.5.2.2(7)
Occupancy classification, change of 15.7.3.5.1.1
Refrigeration machinery room 50.3.1.1
Residential board and care occupancies ... 26.3.2.4.1, 26.3.3.3.3.2
Semiconductor fabrication areas ..... 34.3.7.2.1.3(B), 34.3.7.2.2
Storage occupancies 30.3.3.3.2, 30.8.3.3.3.2
To unenclosed stairways 15.7.3.6.2.2
Exit discharge ..... 11.1.3.2.2, 11.5.4.7, 11.7, 11.8.1.1, A.11.7.1, A.11.8.1.1; *see also* Exit passageways
Apartment buildings 25.2.7
Assembly occupancies 16.2.7
Atriums ..... 8.12.3(2)
Business occupancies 28.2.7
Day-care occupancies 18.2.7, 18.6.2.7
Definition 3.3.197
Detention and correctional occupancies 21.2.7
Educational occupancies 17.2.7
Health care occupancies 19.2.7
Ambulatory health care occupancies 20.2.7
Hotels and dormitories 24.2.7, A.24.2.7.2
Industrial occupancies 29.2.7
Level of ..... 11.7.2; *see also* Floors, Street
Definition 3.3.197.1
Elevator machine rooms/machinery spaces 54.5
Exit passageway A.11.2.6.5
Health care occupancies 20.1.6.2, 20.1.6.3
Open structures 31.5.2.5
Underground structures 7.4.3.5, 31.2.3, 31.2.5
Limited access structures 31.3.1.4
Marking 11.2.2.6.1.5, 11.2.2.6.2
Mercantile occupancies 27.2.7, A.27.2.7.2
Occupancy classification, change of 15.7.3.5.1.1
Open structures 31.5.2.5
Primary level of 15.7.3.8.3
Definition 3.3.197.1.1
Residential board and care occupancies 26.3.2.6
Smokeproof enclosures 11.2.3.5
Storage occupancies 30.2.7
Parking structures 30.8.2.7
Towers ..... 11.2.13.1(3), 31.6.7
Underground structures 31.2.2
Water-surrounded structures 31.7.2.3
Exit enclosures ..... 7.2.7.2.2(2), 11.1.3.2, 11.5.1.4.4, A.11.1.3.2.1.5 to A.11.1.3.2.3; *see also* Stairways, Enclosures
Apartment buildings ..... 25.2.2.1.2, 25.2.2.2.5, 25.3.3.2(1), 25.3.3.3.2
Business occupancies ..... 28.2.4.4(2), 28.3.3.3.2
Doors serving 11.2.1.4.2
Exit separation 11.5.4.2.1
Hotels and dormitories ..... 24.2.2.1.2, 24.2.7.2, 24.2.7.3, 24.3.3.2(1), 24.3.3.3.2, A.24.2.7.2
Industrial occupancies 29.3.3.3.2
Interior finish ..... *see* Interior finish
Mercantile occupancies 27.3.3.3.2
Residential board and care occupancies ..... 26.3.3.3.2(1), 26.3.3.3.3.2
Storage occupancies 30.3.3.3.2
Parking structures 30.8.3.3.2, 30.8.3.3.3.2
Towers ..... 31.6.5.1(7)

--`,,```,,,,````-`-`,,`,,`,`,,`---

Copyright National Fire Protection Association
Provided by IHS under license with NFPA
No reproduction or networking permitted without license from IHS

Not for Resale

Usable space in 11.2.2.5.3, A.11.2.2.5.3.1
Exit passageways 11.2.3.5, 11.2.6, 11.7.4, 11.8.1.1, 11.9.1.2, A.11.2.6.1, A.11.2.6.5, A.11.8.1.1
Apartment buildings 25.2.2.7
Assembly occupancies 16.2.2.7
Business occupancies 28.2.2.7
Day-care occupancies 18.2.2.7
Detention and correctional occupancies 21.2.2.7
Educational occupancies 17.2.2.7
Health care occupancies ..... 19.2.1, 19.2.2.7, 19.2.4.2(5), 20.2.1
Ambulatory health care occupancies 20.2.3.2
Hotels and dormitories 24.2.2.7
Industrial occupancies 29.2.2.7
Light diffusers in ceilings 48.7.4.1, A.48.7.4.1
Live load ..... Table A.35.6.1.2
Mercantile occupancies 27.2.2.7, A.27.2.2.7.2
Malls 27.4.4.5.9, A.27.4.4.5.9.2
Residential board and care occupancies 26.3.2.1.7
Storage occupancies 30.2.2.7
Parking structures 30.8.2.2.7
Exits .....*see also* Doors; Means of egress; subhead, Means of egress, under specific occupancies
Definition 3.3.195, A.3.3.195
Elevators and conveyors opening to 54.4
Horizontal ..... 11.2.1.4.1.3 to 11.2.1.4.1.5, 11.2.1.14, 11.2.4, A.11.2.4.1.2, A.11.2.4.3.8
Accessible means of egress 11.5.4.6
Bridge or balcony as 11.2.4.4
Definition 3.3.195.1, A.3.3.195.1
Membrane structures 32.2.1.2
Performance-based design option 5.2.4.4, 5.5.4.1, A.5.5.4.1
Remotely located 11.5.1.4, 24.2.5.8, 26.3.2.4.4
Apartment buildings 25.2.4.1
Health care occupancies ..... 19.2.4.1, 19.2.5.4, 19.2.5.6.3.2(A), 20.2.4.2
Storage occupancies 30.2.4.2
Separation of ..... 11.1.3.2, A.11.1.3.2.1.5 to A.11.1.3.2.3
Serving more than one story 11.3.1.4
Signs .....*see* Signs, Means of egress
Skywalk bridges 13.8.3
Travel distance to
Apartment buildings ..... 25.2.4.3(4), 25.2.6
Assembly occupancies 16.2.6
Business occupancies 28.2.4.3, 28.2.4.4, 28.2.6
Day-care occupancies 18.2.6, 18.6.2.6
Detention and correctional occupancies ..... 21.2.6, 21.3.7.2(2), 21.4.4.5, 21.4.4.11(2)
Educational occupancies 17.2.6
Health care occupancies 19.2.5.6.2.4, 19.2.5.6.3.4, 19.2.6, 19.3.7.1.5, 19.4.3.3, 20.2.6
High hazard contents 34.3.2.4.1
Hotels and dormitories 24.2.6, 24.2.7.3
Industrial occupancies 29.2.6, 29.6.3.1, A.29.2.6
Measurement of 11.6, A.11.6.2, A.11.6.3
Mercantile occupancies ..... 27.2.4, 27.2.6, 27.4.4.5.2.1, 27.4.4.5.2.2, 27.4.4.5.5.2, A.27.4.4.5.2.2(3), A.27.4.4.5.2.2(7)
Open structures 31.5.2.4
Refrigeration machinery room 50.3.1.2
Residential board and care occupancies 26.3.2.5
Storage occupancies ..... 30.2.6, 30.6.3(1), 30.7.5.2, 30.8.2.6
Towers 31.6.6
Expansion joints .....*see* Joints
Explosion control, high hazard contents areas ... 34.3.2.6, A.34.3.2.6
Explosions
Assembly occupancies 16.3.2.1.1
Hazard of contents 6.3.1.1
Hotels and dormitories 24.3.2.1
Explosive material ..... 4.5.5.3, 6.3.2.4.2(1), Table 34.1.3.1
Assembly occupancies ..... Table 34.1.3.2(a)
Business occupancies ..... Table 34.1.3.2(c)
Construction use 14.5
Day-care occupancies ..... Table 34.1.3.2(e)
Definition 3.3.388.3, A.3.3.388.3
Detention and correctional occupancies ..... Table 34.1.3.2(g)
Educational occupancies ..... Table 34.1.3.2(d)
Explosion control ..... Table 34.3.2.6
Health care occupancies ..... Table 34.1.3.2(b), Table 34.1.3.2(f)
High explosive material (definition) 3.3.388.3.1
Low explosive material (definition) 3.3.388.3.2, A.3.3.388.3.2
Manufacturing, storage, and sale, facilities for 6.4.2.24
Residential occupancies ..... Table 34.1.3.2(h)
Separation of occupancies ..... Table 34.3.3.3
Ventilation 34.3.2.5.1
Exposure fire
Definition 3.3.199, A.3.3.199
Performance-based design option 5.5.2.7, A.5.5.2.7
Roof coverings, tests of 38.2.1
Exterior balconies .....*see* Balconies
Exterior insulation and finish systems (EIFS) 37.5, 40.4.2, D.3.12
Exterior surfaces (definition) ..... 3.3.606.1; *see also* Weather-exposed surfaces
Exterior walls ..... 7.1.3, Table 7.2.1.1.2, 7.3, 8.5, 8.14.3(4), Chap. 37; *see also* Exterior insulation and finish systems; Walls
Aircraft hangars 29.6.2.1, 30.6.2.2
Continuity 7.3.3
Curtain walls and perimeter joint 8.9.3, A.8.9.3.1
Deflection limits ..... Table 35.1.2.8.1.1
Demolition A.14.1
Enhanced fire compartments ..... Table D.2.1.1(a), D.2.3.2.12, D.2.4.2.3, D.2.5.6.7, D.2.5.6.8, D.2.7.8, D.2.7.9, D.3
Finish systems, quality assurance for 40.4
Fire barrier walls and ..... 8.4.4.1(1)
Fireblocks ..... 8.14.2.1(1)
Fire resistance .....*see* Fire-resistance-rated construction
Flashing ..... 37.3.2, 37.3.4 to 37.3.6
Flood resistance 37.1.1.2
Foam plastic insulation 48.4.1, A.48.4.1.2
Grandstands, separation of ..... 32.7.5.1(1)
High hazard contents, buildings containing 34.3.4.2, 34.3.5.2
Horizontal separation ..... 7.3.2.2, 7.3.3, 7.3.4, Table 7.3.5(a), Table 7.3.5(b)
Light-transmitting plastic panels .....*see* Light-transmitting plastic, Wall panels
Lintels 37.1.2
Metal composite material (MCM) 37.4
Opening protectives 7.3.5, 15.7.3.9.3, 15.10.5.3
Parapets 37.1.3, 37.3.5
Plastic veneer 48.6.2, 48.6.3, 48.7.2
Pockets 37.3.3
Projections ..... 37.2; *see also* Balconies
Stair enclosures 11.2.2.5.2, A.11.2.2.5.2
Storage buildings ..... 7.6.3.3(2)
Thermal barriers ..... 48.3.3.4(4), 48.4.1.3
Townhouses, separation between 22.4
Type I and Type II construction 7.2.3.2.12, D.2.3.2.12
Type III construction 7.2.4.1, 7.2.4.2.1, 7.2.4.2.3, D.2.4.1, D.2.4.2.3
Type IV construction 7.2.5.1, 7.2.5.2, 7.2.5.6.7, 7.2.5.6.8, D.2.5.1, D.2.5.2, D.2.5.6.7, D.2.5.6.8
Weather-resistance 37.3, A.37.3
Windows in 8.7.10
Externally illuminated .....*see* Illuminated
Extinguishers, portable fire 55.6
Apartment buildings 25.3.5.11
Assembly occupancies 16.3.5.3
Business occupancies 28.3.5.1
Day-care occupancies 18.3.5.7
Detention and correctional occupancies ... 21.3.5.4, A.21.3.5.4(1)
Educational occupancies 17.3.5.7
Health care occupancies 19.3.5.7, 20.3.5.5
Hotels and dormitories 24.3.5.9
Industrial occupancies 29.3.5.3
Mercantile occupancies 27.3.5.3

Copyright National Fire Protection Association
Provided by IHS under license with NFPA
No reproduction or networking permitted without license from IHS
Not for Resale

Residential board and care occupancies 26.3.3.5.5
Storage occupancies 30.3.5.5, A.30.3.5
Extinguishing systems ....*see also* Sprinkler systems; Standpipe systems
Alternative systems 55.5.1
Alarm activation by 55.5.2
Construction alternatives for fire sprinkler systems 55.5.3
Apartment buildings 25.3.5, A.25.3.5.1
Assembly occupancies ..... 16.3.2.1.2(3), 16.3.5, A.16.3.5.1.3(1)
Business occupancies 28.3.5
Day-care occupancies ..... 18.3.2.1, 18.3.5, A.18.3.2.1(2)(a)
Detention and correctional occupancies ..... 21.3.5, A.21.3.5.4(1)
Educational occupancies 17.3.2.1, 17.3.5
Health care occupancies ..... 19.3.5, A.19.3.5.1 to A.19.3.5.5
Ambulatory health care occupancies 20.3.5
High-rise buildings 33.2.2, A.33.2.2
Hotels and dormitories 24.3.5, A.24.3.5.1
Industrial occupancies 29.3.2, 29.3.5, A.29.3.5
Lodging or rooming houses 23.3.6, A.23.3.6.1, A.23.3.6.2
Mercantile occupancies 27.3.5
Bulk merchandising retail buildings 27.4.5.5
Malls 27.4.4.7.1, 27.4.4.9
One- and two-family dwellings 22.3.5, A.22.3.5
Parking structures 30.8.3.5
Residential board and care occupancies 26.2.3.5, 26.3.3.5, A.26.2.3.5.1, A.26.2.3.5.2.2, A.26.3.3.5.1
Special hazard protection ..... 8.15.1(2), 8.15.2
Supervision 15.6.2.5.4

-F-

Fabrication area (fab area) 34.3.7, A.34.3.7.3.8.4
Definition 3.3.33.5, A.3.3.33.5
Electrical equipment in 34.3.7.3.2
Gas detection systems 34.3.7.3.4.1
Ventilation systems 34.3.7.3.3
Fabricators 40.3.4
Definition 3.3.203, 40.1.3.1
Facilities .....*see also* specific facilities
Accessibility (definition) 3.3.204.1
Essential (definition) 3.3.204.2, 35.2.13.1
Factored load .....*see* Loads
Factors .....*see* Importance factor; Load factor; Resistance factor; Safety factors
Failure of systems and facilities, prevention of 5.2.7
Falls 4.1.3.3.2.1
Fare machines (accessibility) 12.20
Fasteners
Gypsum board and plaster veneer 47.2.2.4, 47.2.4.4
Portable grandstands 32.7.6.4
Roof coverings 38.9.2.7, 38.9.3.5, 38.9.4.7, 38.9.6.5, 38.9.7.7, 38.9.9.7, 38.9.10.7, 38.9.11.5, 38.9.12.5, 38.9.13.7, 38.9.14.7, A.38.9.3.5, A.38.9.6.5, A.38.9.9.7, A.38.9.10.7, A.38.9.11.5, A.38.9.12.5
Structural elements, placement in 7.2.7.10
Wood, use with 45.5.17, 45.6.8
Fences A.14.1
Assembly occupancies, fenced outdoor 16.2.4.2
Definition 3.3.208
Detention and correctional occupancies, fenced areas of 21.2.7.1
Glazing in ..... 46.5.2.1(10)
Festival seating .....*see* Seating
Fiberboard 45.5.8, 45.6.11
Definition 3.3.210, 45.2.2, A.3.3.210, A.45.2.2
Fill 36.2.4, 40.3.5
Film storage .....*see* Cellulose nitrate motion picture film storage
Finish .....*see* Interior finish
Fire alarms .....*see* Alarms and alarm systems
Fire apparatus, access for ..... 7.1.5, A.7.1.5.2.5.6(B), D.1.5.2
Fire areas 7.6.3.6.1, 7.6.3.6.2, 18.1.1.5
Definition 3.3.33.6
Fire barriers A.8.1.2.1
Apartment buildings ..... 25.2.4.2(3), 25.3.4.1.1, 25.3.6.1, 25.3.7
Area of refuge 11.2.12.3.4, A.11.2.12.3.4
Assembly occupancies 16.3.2.1.1, 16.3.2.1.2
Atriums ..... 8.12.3(1), A.8.12.3(1)(b)
Communicating space, vertical openings ..... 8.12.2(4)
Control areas 34.2.4.1.1
Day-care occupancies ..... 18.3.2.1, A.18.3.2.1(2)(a)
Definition 3.3.47.1, A.3.3.47.1
Detention and correctional occupancies 21.3.2.3
Educational occupancies 17.3.2.1
Elevator lobby 11.2.13.3
Exits, separation of .... 11.1.3.2.1, A.11.1.3.2.1.5, A.11.1.3.2.1.6(2)
Exterior wall openings, protection of ..... 37.1.4.2(3)
Fire windows assemblies in 8.7.9, A.8.7.9
Floor assemblies 8.9.3.2
Floor-ceiling and roof-ceiling assemblies 8.6.1.1
Health care occupancies 19.1.1.4.1
Horizontal exits 11.2.4.3, A.11.2.4.3.8
Joints 8.9, A.8.9
Mercantile occupancies 27.1.2.2.1, 27.1.2.2.2, 27.1.3.2.4
Anchor buildings 27.4.4.3.3
Parking structures ..... 7.4.3.6.8.4, 27.1.2.2.1, 27.1.2.2.2, 28.1.2.2, A.28.1.2.2.2(4)
Reconstruction requirements 15.6.2.4
Residential board and care occupancies 26.2.2.3.1
Skywalk bridges 13.8.2
Smoke barrier, use as 8.11.3
Smokeproof enclosures 11.2.3.3
Special hazard protection ..... 8.15.1(1), 8.15.3
Unlimited area buildings 7.6.3.6.3
Fire barrier walls ..... 8.1.2.1, 8.4, A.8.1.2.1, A.8.4.2 to A.8.4.4.4; *see also* Fire walls
Additions 15.8.3
Continuity 8.4.4, A.8.4.4.4
Day-care occupancies 18.3.5.2
Definition 3.3.644.4
Hotels and dormitories 24.3.7
Impact damage 8.4.3, A.8.4.3
Joints 8.4.7, 8.9, A.8.9
Occupancy classification, change of 15.7.3.2.2, 15.7.3.8.1.4
Opening protectives 8.4.5, 8.7.6.1
Penetrations .....*see* Penetrations
Vertical openings, enclosure of 8.12.1.2, A.8.12.1.2
Fireblock ..... 1.7.6.6.3.4(D), 7.2.3.2.1, 8.8.7.2(1), 8.14.2, 15.4.2.9.1(3), 37.1.3.1(6), 45.6.11.3, D.2.3.2.13(7)
Definition 3.3.228
Fire compartments ..... 8.1.2, A.8.1.2.1; *see also* Enhanced fire compartments
Day-care occupancies 18.3.5.1, 18.3.5.2
Definition 3.3.107.1, A.3.3.107.1
Detention and correctional occupancies ..... 21.2.2.5.1, 21.2.2.5.2, 21.2.4.1(2), 21.2.4.2, 21.2.7.2
Horizontal exits 11.2.4, A.11.2.4.1.2, A.11.2.4.3.8
Fire curtains 16.4.5.6
Fire dampers .....*see* Dampers
Fire department access .....*see* Accessible (accessibility)
Fire detection systems .....*see* Detection systems
Fire door assemblies .... 8.7.5, 8.7.6, A.8.7.5.2; *see also* Floor fire door assemblies
Day-care occupancies 18.6.3.1
Definition 3.3.36.1.1
Exit enclosures 11.1.3.2.1.4
Glazing in ..... 8.4.5.2, 8.7.5.2.1, 8.7.8, 8.7.11, 8.7.13, 46.5.1(3)
Health care occupancies 19.1.2.4, 20.3.7.1
Horizontal exits 11.2.4.4.7
Semiconductor fabrication areas ..... 34.3.7.2.1.3(A)
Smokeproof enclosures ..... 11.2.3.4, 11.2.3.7(1)
Storage occupancies 30.2.2.5.2, A.30.2.2.5.2
Fire doors .... 8.3.2.8.3, 8.3.2.8.4.1, 8.7, A.8.3.2.8.3, A.8.7.3 to A.8.7.9
Definition 3.3.163.3
Enhanced fire compartment barriers D.5.2.2

Copyright National Fire Protection Association
Provided by IHS under license with NFPA
No reproduction or networking permitted without license from IHS
Not for Resale

Horizontal exits 11.2.4.3.7, 11.2.4.3.9, 11.2.4.4.7
Industrial occupancies 29.2.2.5.2, A.29.2.2.5.2
Self-closing/automatic closing 8.7.3, 8.7.4, A.8.7.3
Stair enclosures 33.2.3.2
Wired glass, use of 8.7.8
Fire escape ladders 11.2.9, A.11.1.1
Apartment buildings 25.2.2.8
Assembly occupancies 16.2.2.8, 16.2.4.6
Business occupancies 28.2.2.10
Day-care occupancies 18.2.2.8
Detention and correctional occupancies 21.2.2.8
Educational occupancies 17.2.2.8
Health care occupancies 19.2.2.8
Hotels and dormitories 24.2.2.10
Industrial occupancies 29.2.2.9
Live loads ..... Table A.35.6.1.2
Mercantile occupancies 27.2.2.10
Open structures 31.5.2.1
Performance-based design option ..... 5.3.2(6)
Residential board and care occupancies 26.3.2.1.8
Serving catwalks 16.2.2.8.2
Storage occupancies 30.2.2.8, 30.7.2.2, 30.7.3
Towers 31.6.3.1, 31.6.11.1.1
Fire escape stairs 11.2.8, A.11.2.8
Fire exit hardware 11.2.1.2.3.2, 11.2.1.5.12, 11.2.1.7, A.11.2.1.5.12
Assembly occupancies ..... 16.2.2.2.3, 16.2.2.2.4(2)
Day-care occupancies 18.2.2.2.2
Definition 3.3.299.1
Educational occupancies 17.2.2.2.2
Reconstruction requirements 15.6.2.1.4.9
Fire hazards
Assembly occupancies ..... 16.4.1.2(4)
Buildings as ..... 1.3.4(4), 1.7.5.3, A.1.7.5.3.1.1(10)
Fire hydrants 55.8
Fire models
Definition 3.3.220, A.3.3.220
Performance-based design option 5.5.1.4, 5.6.3.1, 5.8.11, 5.8.12, A.5.8.11
Fireplaces 19.5.2.2.4, 19.5.2.2.5, 32.11, 43.9
Fire protection glazing ..... 34.3.7.2.1.3(B), 46.11
Fire protection rating
Definition 3.3.506.1
Elevator lobby doors 11.2.13.4
Elevator machine rooms/machinery spaces 54.5.4
Horizontal sliding doors ..... 11.2.1.14(5)
Opening protectives (fire doors and windows) ..... 7.3.5.2, 7.3.5.3, 8.7.2, 8.7.5, 8.7.6.1, 8.7.9, 8.7.10.1, 8.11.4.2(1), 11.2.3.4, 11.2.3.7(1), 11.2.4.4.7, 24.2.2.1.2, 24.2.4.2(1), 24.3.1.1.3, 24.3.6.3, 25.2.2.1.2, 25.3.1.1.4, 25.3.6.2, A.8.7.5.2, A.8.7.9
Semiconductor fabrication areas ..... 34.3.7.2.1.3(B)
Shafts, opening protectives for 15.7.3.6.4
Fire protection systems ..... Chap. 55; *see also* Alarms and alarm systems; Communications systems; Detection systems; Extinguishing systems
Additions 15.8.3
Apartment buildings 25.3, A.25.3.4.5.1, A.25.3.5.1
Assembly occupancies ..... 16.3, 16.4.5.9, A.16.3.1 to A.16.3.4.2.3
Business occupancies 28.3
Construction, out-of-service during 5.5.4.2
Day-care occupancies ..... 18.3, 18.6.3, A.18.3.2.1(2)(a)
Design/installation 4.4.6
Detention and correctional occupancies ..... 21.1.1.5, 21.3, 21.4.5.2.3, 21.4.5.2.4, A.21.3.1(2) to A.21.3.8
Documentation 55.1.5
Educational occupancies ..... 17.3, A.17.3.3.2 to A.17.3.4.3.1.1; *see also* Sprinkler systems
Existing systems 55.1.3
Flood-resistant construction 39.10, 55.1.6, A.39.10
Health care occupancies ..... 19.3, A.19.3.2.1 to A.19.3.2.6
High hazard contents 34.3.2.1
High-rise buildings 33.2, A.33.2.1.1
Industrial occupancies 29.3, A.29.3.5
Inspection, maintenance, and testing ..... 1.7.6.6.3.4(M), 55.1.4
Lodging or rooming houses ..... 22.3, 23.3, A.22.3.5, A.23.3.2 to A.23.3.6.2
Membrane structures 32.2.1.4, 32.3.5.1
Mercantile occupancies ..... 27.3, A.27.3.2.1 to A.27.3.6.1
Malls 27.4.4.7
Mixed occupancies 6.2.3.2, 6.2.3.4
Modifications 15.5.1.3.2, 15.5.1.3.4, 15.5.1.3.5
Occupant response characteristics ..... 5.4.3, 5.8.5, A.5.4.3.1 to A.5.4.3.6
Open structures 31.5.2.9, 31.5.2.10
Parking structures 30.8.3
Performance-based design option 5.3.1, 5.5.2.8, A.5.5.2.8
Plans for 1.7.6.3.1.4, 1.7.6.3.1.8, 1.7.6.3.1.9
Referenced standards 55.1.1
Required systems 7.1.5.2.1.2, 7.2.1.3, 55.1.2
Residential board and care occupancies ..... 26.2.3, 26.3.3, A.26.2.3.2.1 to A.26.2.3.5.2.2, A.26.3.3.3 to A.26.3.3.8
Storage occupancies 30.3, A.30.3.5
Tents 32.3.5.1
Towers 31.6.11
Fire pumps ..... 33.2.5.5(8), 55.3.2.1.1
High-rise buildings 33.2.4.2.4
Occupancy category for wind, snow, and earthquake, pump structures ..... Table 35.3.1
Fire-resistance-rated construction .. 7.2.1.1, 7.2.1.3, 8.2, A.8.2; *see also* Wood, Fire retardant-treated
Apartment buildings ..... 25.1.1.3(1), 25.2.2.1.2, 25.2.4.3(5), 25.3.1.1.4
Awnings and canopies ..... 32.4.2.1(4)
Balconies and other projections 37.2.2
Boiler and furnace rooms 15.6.2.8.1
Bulk storage elevators 30.7.2.1
Business occupancies 28.3.6.1, A.28.3.6.1
Ceiling plenums 7.2.3.2.20
Construction documents 1.7.6.3.1.6, 1.7.6.3.1.7
Corridors 11.1.3.1, 27.3.6, 28.3.6, A.27.3.6.1, A.28.3.6.1
Day-care occupancies 18.3.6
Detention and correctional occupancies ..... Table 21.4.4.12
Detention and correctional residential housing area ... 21.3.7.1.2(2), Table 21.3.8.1
Educational occupancies 17.3.6
Elevator machine rooms/machinery spaces 54.5.3
Enhanced fire compartments D.3.2
Type I and Type II construction D.2.3.2.3, D.2.3.2.6, D.2.3.2.8, D.2.3.2.11.2
Type III construction D.2.4.2.1
Type IV construction D.2.5.2, D.2.5.3
Type V construction D.2.7
Exit discharge 11.7.2.5
Exit enclosures 11.5.4.2.1
Exterior walls ..... 37.1.3, 37.1.4.2(2), 37.4.3
Fire barriers ..... *see* Fire barriers
Grandstands ..... 16.4.8.3.1, 16.4.8.3.2, 16.4.8.5(2), 32.7.5.1(2), 32.7.5.2
Gypsum lath, plaster, and board 47.1.3, 47.2.1.2, 47.2.1.3
Health care occupancies ..... 19.1.2.2(2), 19.1.2.3, 19.4.3.6.1, 20.1.2.2(2), 20.3.6.1(2), 20.3.7.1, A.19.1.2.3
Ambulatory health care occupancies 15.7.3.8.4
Corridors and doors 15.5.2.2.2, 15.5.2.2.3
Historic buildings 15.10.4.9, 15.10.5.3, 15.10.5.9
Horizontal assemblies ..... *see* Horizontal assemblies
Hotels and dormitories ..... 24.2.2.1.2, 24.2.4.2(5), 24.2.6.3.3(2), 24.3.1.1.3, 24.3.6.1, 24.3.6.2
Industrial occupancies 29.2.5.2.2, A.29.2.5.2.2
Membrane material, use of 32.2.2.2
Mercantile occupancies 27.4.4.5.9.2, A.27.4.4.5.9.2
Multiple occupancies 15.6.2.5.3
One- and two-family dwellings 22.4.1
Outside stairs, access from 11.2.2.7.1

--`,,```,,,,````-`-`,,`,,`,`,,`---

Copyright National Fire Protection Association
Provided by IHS under license with NFPA
No reproduction or networking permitted without license from IHS

Not for Resale

Parking structures ..... 7.4.3.6.5, 7.4.3.6.8.2 to 7.4.3.6.8.4, 30.8.3.1.1.1, 30.8.3.1.1.2
Residential board and care occupancies ..... 26.1.2.3, 26.1.5, 26.2.2.3.3, 26.2.2.3.6, 26.2.3.2.3(1), 26.2.3.2.4(1), 26.2.3.6.1(1), A.26.1.5
Roofing assemblies 38.2, 38.3.1, A.38.2.2
Rooftop structures 38.3.1
Semiconductor fabrication areas 34.3.7.2.1.3, 34.3.7.2.3.2
Separated occupancies, separations for 6.2.4
Smoke barriers .....*see* Smoke barriers
Smokeproof enclosures 11.2.3.9.2, 11.2.3.9.3
Stairway enclosures 11.2.2.5.2.3, 11.2.2.7.3.1, 15.7.3.6.2.2
Storage occupancies 30.8.3.1.1.1, 30.8.3.1.1.2
Parking structures 30.8.1.6.1, 30.8.1.6.2
Structural elements, requirements for 7.2.7
Type I and Type II construction 7.2.3.2.3, 7.2.3.2.4, 7.2.3.2.6, 7.2.3.2.8, 7.2.3.2.10, 7.2.3.2.11.2
Type III construction 7.2.4.2.1, D.2.4.2.1
Type IV construction 7.2.5.6.3, 7.2.5.6.5, 7.2.5.6.7, D.2.5.2, D.2.5.3
Type V construction D.2.7
Unlimited area buildings 7.6.3.6.3
Vertical openings, enclosures of 8.12.1.5, 15.7.3.6.2.2, 15.7.3.6.3, A.8.12.1.5
Walls 8.2.2.4, A.8.2.2.4.2.1
Exterior ..... 7.2.4.2.1, 7.2.7.8, 7.2.7.9, 7.3.2, 8.2.2.4.4, 8.2.2.4.5, 15.7.3.9, 32.7.5.1(1), 48.4.1.2, A.48.4.1.2
Fire walls .....*see* Fire walls

Fire resistance rating .....*see also* Fire-resistance-rated construction
Analytical methods to determine 8.2.3, A.8.2.3.2.1
Definition 3.3.506.2

Fire-retardant coatings .....*see* Interior finish

Fire retardant-treated wood .....*see* Wood

Fire safety functions 55.2.5, A.55.2.5.3
Definition 3.3.223

Fire safety (safety from fire) ..... 4.1.3.1, A.4.1.3.1.1, A.4.1.3.1.2.2; *see also* Means of egress
Flood-resistant construction 39.1.2
Multiple safeguards 4.4.1, A.4.4.1
Occupancy classification, change of 15.7.3.5
Performance-based design option 5.2.2, A.5.2.2
Requirements 4.4, A.4.4.1. A.4.4.4

Fire scenario
Definition 3.3.224, A.3.3.224
Design 5.1.4
Definition 3.3.224.1
Performance-based design option 5.5, 5.8.6, A.5.5

Fire source .....*see* Single fire source, assumption of

Fire spread ..... 8.1, A.8.1.2.1; *see also* Fire scenario; Flame spread
Hazard of contents 6.3.1.1
Limiting 4.4.7
Performance-based design option 5.2.2.2, 5.2.2.6, A.5.2.2.2, A.5.2.2.6

Firestops ..... 8.8.2, 8.8.6.1, 8.8.7.1, A.8.8.2.2.1(1)
Alternative requirements ..... 8.8.2.2.1(4)
Definition 3.3.230
F ratings 8.8.2.3
Plenums 7.2.3.2.16, D.2.3.2.16
Quality assurance 40.9
Testing 8.8.2.1
T ratings 8.8.2.4

Fire walls ..... 8.3, A.8.3.1.1 to A.8.3.3.10.4; *see also* Fire barrier walls
Cantilevered 8.3.2.3, 8.3.2.6.2, 8.3.2.7.1, 8.3.2.7.2, 8.3.3.3, A.8.3.2.3, A.8.3.2.6.2, A.8.3.3.3
Clearance 8.3.2.7, 8.3.3.8, A.8.3.2.7, A.8.3.3.8.1
Definition 3.3.644.5, A.3.3.644.5
Double 8.3.1.3, 8.3.2.5, 8.3.2.6.1, 8.3.2.7.2, 8.3.2.8.4, 8.3.3.5, 8.3.3.10.3, A.8.3.1.3, A.8.3.2.5, A.8.3.2.6.1, A.8.3.2.8.4, A.8.3.3.5, A.8.3.3.10.3
Elevation differences 8.3.2.6, 8.3.3.7, A.8.3.2.6.1, A.8.3.2.6.2
Enhanced fire compartments D.2.3.1, D.2.4.1, D.2.5.1
Fiberboard in 45.6.11.4
Grandstands, separation of ..... 32.7.5.1(2)
High challenge ..... 8.3, A.8.3.1.1 to A.8.3.3.10.4
Horizontal continuity 8.3.2.16, 8.3.3.9, A.8.3.2.16.2.1
Impact damage 8.3.1.4, 8.3.3.2.4, A.8.3.1.4, A.8.3.3.2.4
Joints 8.3.1.5, 8.3.2.9.2.3, 8.9, A.8.9
Opening protectives ..... 8.3.1.6, 8.3.2.8, 8.7.6.1, A.8.3.2.8.3 to A.8.3.2.8.5
Penetrations 8.3.1.7, 8.3.2.9, 8.3.2.15, 8.3.3.11, A.8.3.2.9
Structural stability and strength 8.3.2.2
Termination 8.3.3.6
Tied 8.3.2.4, 8.3.3.4, A.8.3.2.4, A.8.3.3.4

Fire window assemblies ..... 7.3.5.5(2), 8.7.5, 8.7.6.2, 8.7.9, A.8.7.5.2, A.8.7.9
Definition 3.3.36.2
Exit passageways 11.2.6.3
Glazing in ..... 8.4.5.2, 8.7.5.2.1, 8.7.8, 8.7.11, 8.7.13, 46.5.1(3)
Health care occupancies 20.3.7.1
Horizontal exits 11.2.4.4.7
Residential board and care occupancies ..... 26.2.3.6.1(3)
Smoke barriers ..... 8.11.4.2(2)

Fire windows ..... 8.7, A.8.7.3 to A.8.7.9
Definition 3.3.656.2
In exterior walls 8.7.10
Wired glass, use of 8.7.8

Fireworks
Consumer, 1.4G ..... 6.3.2.4.4(3), 34.1.1.2(14), Table 34.1.3.1, Tables 34.1.3.2(a) to (h)
Definition 3.3.231.1, A.3.3.231.1
Definition 3.3.231, A.3.3.231
Display, 1.3G (definition) 3.3.231.2, A.3.3.231.2
Manufacturing and storage facilities and magazines 6.4.2.25

First story above grade .....*see* Story

Fishing piers and platforms (accessibility) 12.6.2.14, 12.6.7.10, 12.37, 12.45.11

Fitness, warrant of 4.5.4.2

Fitting rooms 12.22

Fixtures .....*see* Equipment or fixtures

Flame resistance .....*see also* Fire-resistance-rated construction
Membrane materials 32.2.2.4
Tent fabric 32.3.3

Flame spread .....*see also* Fire spread
Definition 3.3.233, 10.3.2, A.10.3.2
Exterior curtain walls and perimeter joints 8.9.3.1, A.8.9.3.1
Foam plastic insulation 48.4.1.4
Interior finishes, tests of 10.3.2, 10.3.6, A.10.3.2, A.10.3.6
Leapfrog effect A.8.9.3.1
Membrane materials 32.2.2.3
Plenums ..... 7.2.3.2.15.1 to 7.2.3.2.15.4

Flame spread index (definition) 3.3.332.1

Flammable gas ..... 6.3.2.4.3(3), Table 34.1.3.1, Tables 34.1.3.2(a) to (h)
Definition 3.3.270.2
Explosion control ..... Table 34.3.2.6
Liquefied .....*see* Liquefied flammable gas
Semiconductor manufacturing operations .. Table 34.3.7.2.1.2(A)

Flammable liquids ..... 6.3.2.4.3(1), 6.3.2.4.3(3), 6.3.2.4.4(2), 34.1.1.2, Table 34.1.3.1
Assembly occupancies ..... 16.3.2.1.2(1)(c), 16.3.2.1.2(2)(d), Table 34.1.3.2(a)
Business occupancies ..... Table 34.1.3.2(c)
Day-care occupancies ..... 18.3.2.1(1)(c), 18.3.2.1(2)(d), Table 34.1.3.2(e)
Definition 3.3.360.2, A.3.3.360.2
Detention and correctional occupancies ..... Table 34.1.3.2(g)
Dipping and coating process facilities using 6.4.2.19
Educational occupancies ..... 17.3.2.1(1)(c), 17.3.2.1(2)(d), Table 34.1.3.2(d)
Explosion control ..... Table 34.3.2.6
Health care occupancies ..... Table 34.1.3.2(b), Table 34.1.3.2(f)
Industrial occupancies 34.1.3.3.3
Residential occupancies ..... Table 34.1.3.2(h)

Copyright National Fire Protection Association
Provided by IHS under license with NFPA
No reproduction or networking permitted without license from IHS
Not for Resale

Semiconductor manufacturing operations .... Table 34.3.7.2.1.2(A)
Storage occupancies 6.4.2.26
Parking structures ..... 30.8.3.2.1(2)
Storage rooms .....*see* Liquid storage rooms
Ventilation 34.3.2.5.1.1, 34.3.2.5.4
Flammable materials
Rehabilitation work, use for 4.5.5.3
Semiconductor manufacturing operations ..... Table 34.3.7.2.4.6
Spray application facilities using 6.4.2.60
Flammable solids ..... 6.3.2.4.4(4), Table 34.1.3.1, Tables 34.1.3.2(a) to (h)
Definition 3.3.238, A.3.3.238
Semiconductor manufacturing operations .... Table 34.3.7.2.1.2(A)
Flammable vapors (definition) ..... 3.3.239; *see also* Flammable gas
Flashing
Definition 3.3.241
Exterior walls ..... 37.3.2, 37.3.4 to 37.3.6
Roof assemblies/roofs 38.1.1.3, 38.4.1, 38.7, 38.9.2.6, 38.9.3.4, 38.9.4.6, 38.9.5.4, 38.9.6.4, 38.9.7.6, 38.9.8.6, 38.9.9.6, 38.9.10.6, 38.9.11.4, 38.9.12.4, 38.9.13.6, 38.9.14.6, A.38.9.3.4.2, A.38.9.6.4.2, A.38.9.7.6.2, A.38.9.9.6.2, A.38.9.11.4.2, A.38.9.12.4.2
Flashover 10.3.6, A.10.3.6
Definition 3.3.242
Flash point (definition) 3.3.476.2, A.3.3.476.2
Flexible plan and open plan educational or day-care buildings ..... 17.4.3, 18.2.9(3), 18.4.3
Definition 3.3.65.8, A.3.3.65.8
Flood boundary and floodway map (FBFM) (definition) 3.3.383.1, 39.2.18.1
Flood damage-resistant material 39.5.5, A.39.5.5
Definition 3.3.388.4, 39.2.7
Flood elevation
Base (BFE) ..... 39.2.8.1, 39.3.2.2, 39.3.2.3, C.4.4(6)
Definition 3.3.247.1
Dwelling unit accessibility 12.33.2.4
Certification 39.12.3.1.3, 39.12.3.2.3
Design (DFE) ..... 35.4.2.6.2(2), 39.1.2, 39.2.8.2, 39.3.2, 49.2.6, 50.2, 53.2, A.39.3.2, A.49.2.6, C.2.3 to C.2.6, C.3.2(3), C.6.2(2), C.7.1; *see also* Lowest floor
Breakaway wall design 39.11.2.1, A.39.11.2.1
Definition 3.3.247.2
Enclosures below ..... 39.11, A.39.11.1.1 to A.39.11.2.1
Floodproofed areas below ..... 35.4.2.6.2(7)
Foundation walls 36.6.1.3.2
Materials used below 39.9, A.39.9
Site preparation 39.12.1
Flood hazard areas ..... 4.5.9, 15.1.2.4.5, 35.4.2.6.2, 39.4, C.1.1, C.1.2(8), C.1.3, C.3.2(3)
Coastal areas, alterations in C.2.8
Construction in .... 35.12.1, 35.12.3, 39.1.1; *see also* Flood-resistant construction
Definition 3.3.33.7, 39.2.1
Establishment of 39.4.2, C.1.5.2
Existing buildings in 5.2.8.2, 15.10.1.3, 39.13.1, A.5.2.8.2
High velocity wave action .....*see* High velocity wave action
Historic buildings in 5.2.8.2, 15.10.1.3, A.5.2.8.2
Inspection of buildings in ..... 1.7.6.6.3.4(N)(5)
Manufactured homes in 39.14
Multiple flood hazard zones 39.6.2
Occupancy classification 6.1.1.3
Riverine areas, activities in C.2.4
Special ..... 39.4.1.1(1), 39.4.1.2
Definition 3.3.33.7.1, 39.2.1.2
Temporary structures, permits for 1.7.6.1.1.3, 39.15
Flood hazard boundary map (FHBM) (definition) 3.3.383.2, 39.2.18.2
Flood hazard certifications 39.12.3
Flood hazard map ..... 35.4.2.6.2(1), 35.12.1, 39.4.1.1(2), 39.4.2, 39.12.1(2), C.2.6
Definition 3.3.383.3, 39.2.18.3
Flood insurance rate map (FIRM) ..... 39.4.1.1(1), 39.4.2(1)
Definition 3.3.383.4, 39.2.18.4
Flood insurance study ..... 39.4.2(1)
Definition 3.3.252, 39.2.9
Flood load 35.4.2.6.2, 35.12, 39.2.10, 39.5.2, A.35.12
Floodproofing ... 35.4.2.6.2(7), 39.11.1.2, 39.12.3.1.2, A.39.11.1.2; *see also* Dry floodproofing
Flood-resistant construction ..... 35.4.2.6.2, 35.12, Chap. 39, A.35.12, Annex C; *see also* Flood hazard areas
Documentation 39.12
Electrical systems 52.2
Elevators 54.7
Enclosures below design flood elevation ..... 39.11, A.39.11.1.1 to A.39.11.2.1
Existing structures 39.13
Exterior walls 37.1.1.2
Fire protection systems 55.1.6
Fire safety provisions, conflicts with 39.1.2
Foundations .....*see* Foundations
Lowest floor elevation .....*see* Lowest floor (flood resistance)
Materials 39.9, A.39.9
Mechanical systems 50.2
Objectives C.1.2
Performance-based design option 5.3.10
Permits C.1.4, C.2, C.3
Plumbing systems 53.2
Records C.2.9
Site plan requirements 39.12.1
Special construction 32.1.2
Subdivision requirements ..... C.6.2(1)
Systems 39.10, A.39.10
Utilities C.7.3
Variances C.4
Ventilation systems 49.2.6, A.49.2.6
Violations C.1.4
Floods
Base (definition) 3.3.244.1, 39.2.6.1
Definition 3.3.244, 39.2.6
Design 39.3, 39.5, A.39.3.2, A.39.5.5
Definition 3.3.244.2, 39.2.6.2
Floodways ..... 39.12.1, C.3.2(3)
Definition 3.3.253, 39.2.11
Encroachment C.2.5
Flood-resistant construction ..... C.6.2(1), C.6.2(3), C.7.1
Revision C.2.6
Variances, granting of C.4.3
Floor area
Gross 11.3.1.2
Definition 3.3.33.8, A.3.3.33.8
Mercantile occupancies 27.1.3.2.1, 27.1.3.2.2, 27.1.3.2.4
Maximum A.7.6.2.3.2
Net 11.3.1.2
Definition 3.3.33.8.2
Permitted increases A.7.6.2.1
Floor assemblies
Exterior curtain wall and 8.9.3.2, 8.9.3.3
Fire resistance-rated 8.2.1.3
Health care occupancies 19.1.6.2
Parking structures ..... 7.4.3.6.6(3), 7.4.3.6.6(4), 7.4.3.6.7.2
Floor-ceiling assemblies 8.6
Enhanced fire compartments ..... Table D.2.1.1(a)
Joints 8.9, A.8.9
Penetrations .....*see* Penetrations
Floor fire door assemblies 8.6.2.2, 8.7.7
Definition 3.3.36.1.2
Floor proximity exit signs and marking 11.10.1.5, 11.10.1.6, 16.4.7.7.3, A.11.10.1.5, A.11.10.1.6, A.16.4.7.7.3
Floors ..... Table 7.2.1.1.2; *see also* Construction types; Plenums
Amusement rides ..... 12.45.8.2.4.1 to 12.45.8.2.4.3, 12.45.8.2.5.1, 12.45.8.2.6.1
Attic, insulation installed on 8.16.3.2
Below ground level, base for 36.8.4

Copyright National Fire Protection Association
Provided by IHS under license with NFPA
No reproduction or networking permitted without license from IHS
Not for Resale

Deflection limits, floor members ..... Table 35.1.2.8.1.1
Enhanced fire compartments D.2.3.1, D.2.4.1, D.2.5.1, D.2.6
Type V construction D.2.7.2.1, D.2.7.2.2
Exit passageways 11.2.6.6
Finish .....*see* Interior finish
Fire barrier walls, termination of ..... 8.4.4.1(2)
Fire dampers in ..... 8.8.8.2.4(1)
Fire-resistant 1.7.6.3.1.6, 1.7.6.3.1.7, 7.2.7.2.1, 8.2.2.1, 8.2.2.2
Fishing piers and platforms, clear floor area 12.45.11.4
Framing, wood ..... 1.7.6.6.3.4(D), 45.6.5
Golf weather shelters, clear floor area 12.45.12.4
Guest rooms, clear floor area 12.45.3.2.3
Health care occupancies
Carpeted ..... 19.3.2.6(7)
Clear floor area 12.45.2.3
High hazard contents storage rooms 34.3.2.9
Joints 8.9, A.8.9
Live load .....*see* Loads
Lowest .....*see* Lowest floor (flood resistance)
Mezzanines 7.2.3.2.3, 7.2.3.2.4
Miniature golf facilities, clear floor area 12.45.13.3.1, 12.45.13.3.2
Openings in 8.6.2.1, 8.6.2.2
Parking structures 30.8.1.6.4, 30.8.3.2.2
Penetrations .....*see* Penetrations
Play areas, clear floor area 12.45.14.4.2
Radon control methods 49.2.5.3
Semiconductor fabrication areas 34.3.7.2.1.4
Sheathing, wood 45.6.7
Street
Apartment buildings 25.2.3.2
Business occupancies 28.2.1.2, 28.2.3.3
Definition 3.3.254.2, A.3.3.254.2
Mercantile occupancies ... 27.2.1.3, 27.2.1.4, 27.2.3.2, 27.3.1(1)
Residential board and care occupancies 26.3.2.2.2
Type IV construction 7.2.5.5.5, 7.2.5.6.4, D.2.5.1, D.2.5.5.5, D.2.5.6.4
Type V construction 7.2.6, D.2.7.2.1, D.2.7.2.2
Vermin proofing B.2.1, B.2.2
Wood .....*see* Wood
Foam extinguishing systems ..... Table 55.5.1
Foam plastic insulation ..... 8.16.1.2(2), 38.3.3, 45.6.9.5.2, 48.3, 48.4, A.48.3.2.1, A.48.4.1.2, D.2.3.2.13(1)
Definition 3.3.257, 48.2.1
Type I and Type II construction ..... 7.2.3.2.13(1)
Foam roofing, spray polyurethane ..... 38.9.11, A.38.9.11.2 to A.38.9.11.5
Folding and telescopic seating .....*see* Seating
Food courts .....*see* Courts
Food products facilities 6.4.2.2
Footings
Constrained design formula 36.4.4
Definition 3.3.260
Flood hazard areas 36.4.5
Hydrostatic uplift 35.14.2
Lateral bearing 36.4.2
No constraint design formula 36.4.3
Soil-bearing 36.4
Foundations ..... Chap. 36
Drainage 36.8.3
Excavations for 36.2, 36.4.1.2
Flood-resistant construction 36.4.5, 36.6.1.3, 39.8, 39.14.1
Floors below ground level, base for 36.8.4
Historic buildings 15.10.3.2
Hydrostatic uplift 35.14.2
Inspection ..... 1.7.6.6.3.4(A)
Piles, piers, and caissons 36.5, 39.8.1, 39.8.2, 41.2.3
Axial and lateral loads for 36.5.2
Cast-in-place concrete 36.5.8
Driven piles 36.5.3
Isolated piers 36.6.1.1, 36.6.1.2
Precast concrete 36.5.5, 36.5.6
Structural steel 36.5.7
Wood piles 36.5.4
Plates or sill bonding 36.6.3, 45.6.9.6.5
Pools and spas 32.8.2.1
Quality assurance programs ..... 40.2.4(4)
Radon protection 49.2.5.3.3.5
Site grading 36.8.5
Soil-bearing footings 36.4
Structural tests and inspections 40.3.6
Vermin proofing of B.2.1, B.2.3
Waterproofing and dampproofing 36.8
Wood 36.7, 45.6.8.7, 45.6.9.6.16, A.36.7
Foundation walls 36.6
Concrete 41.2
Definition 3.3.644.6
Fiberboard insulation 45.6.11.5
Masonry pier and curtain wall foundations 36.6.4
Piles, piers, and caissons 36.6.1.1, 36.6.1.2
Rubble stone 36.6.2.5
Thickness 36.6.2
Waterproofing and dampproofing 36.8
Foyers ..... 11.5.1.7, 11.7.2.4; *see also* Lobbies
Definition 3.3.262
Frangible buildings 34.3.3.4
Definition 3.3.65.9
Enhanced fire compartments D.7.4.3
Frangible construction 4.1.3.3.2.6, 5.2.4.5
Frontage increases 7.6.2.1, A.7.6.2.1
Fuel cell power plants ..... 6.4.2.61, 50.1(7)
Fuel dispensing devices 12.28, 30.8.2.5.3
Fuel gas .....*see also* Compressed gas; Gas space heaters; Liquefied natural gas (LNG); LP-Gas
Appliances ..... 50.1(1)
Definition 3.3.270.3
Distribution piping and equipment ..... 34.1.1.2(13), 53.1(1)
Membrane structures 32.2.1.5.1
Oxygen-fuel gas systems facilities 6.4.2.52
Fuel load .....*see* Loads
Functionally dependent facilities (flood resistance) (definition) 3.3.204.3, 39.2.12
Function goal and objective 4.1.5.3, A.4.1.5.3.1, A.4.1.5.3.2
Furnace rooms 11.12
Assembly occupancies ..... 16.3.2.1.2(1)(a)
Building rehabilitation ..... 15.6.2.8, 15.7.3.4.1(4)
Business occupancies 28.3.2.1, A.28.3.2.1
Day-care occupancies ..... 18.3.2.1(1)(a)
Educational occupancies ..... 17.3.2.1(1)(a)
Health care occupancies ..... Table 19.3.2.1
Furnishings
Detention and correctional occupancies A.21.3.2.1
Educational occupancies 17.5.5

-G-

Galleries ..... 16.2.2.3.2, 16.2.4.6, 16.3.1(2), 16.4.5.7, 16.4.5.8
Definition 3.3.267
Exterior 11.5.3
Renovations 15.4.4.2.3, 15.4.4.3.3
Gangway (accessibility) 12.6.7.10, 12.45.9.2, 12.45.11.1
Definition 3.3.268
Garages
Definition 3.3.269
Foam plastic insulation, garage doors ..... 48.3.3.4(7)
Parking ..... 15.7.2.1.1(4); *see also* Parking structures
Definition 3.3.269.1
Private ..... 15.7.2.1.1(3)
Definition 3.3.269.2
Doors 11.2.1.4.1.6
Fire department access for 7.1.5.2.1.1
Rehabilitation of ..... 15.5.5.4.3.5, 15.5.5.5(3), 15.7.2.4.1(2), 15.7.2.4.1(4)
Repair ..... 6.4.2.45, 15.7.2.4.1(2), 15.7.2.4.1(4), 30.8.1.2

Copyright National Fire Protection Association
Provided by IHS under license with NFPA
No reproduction or networking permitted without license from IHS
Not for Resale

Definition 3.3.269.3
Truck and bus, live loads ..... 35.6.4, Table A.35.6.1.2
Gas .....*see also* Compressed gas; Flammable gas; Fuel gas; LP-Gas; Oxidizing gas
Anesthetizing locations 19.3.2.3
Hazard of contents 6.3.1.1
Medical gas 19.3.2.4
In parking structures 30.8.3.2.1
Penetrations for .....*see* Penetrations
Toxic, buildings containing ..... Table 35.3.1
Gas cabinets 34.3.7.3.4.3
Definition 3.3.271, A.3.3.271
Gas detection systems 34.3.7.3.4, 34.3.7.3.6.3
Gaseous hydrogen systems, facilities housing 6.4.2.29
Gas rooms 34.3.6.1, 34.3.7.2.4.6, 34.3.7.3.3.2, 34.3.7.3.4.3, 34.3.7.3.6.2
Definition 3.3.534.2
Gas space heaters 17.5.2.3, 18.5.2.3
Gas turbines, buildings housing 6.4.2.14
Gates (accessibility) 12.45.1
General industrial occupancies .....*see* Industrial occupancies
Generators .....*see also* Standby power
Emergency 11.9.2.4
High-rise buildings ..... 33.2.5.5(9)
Power-generation buildings 29.2.6.1, 29.3.5.1.3, A.29.2.6.1, A.29.3.5.1.3
Girders ..... Table 7.2.1.1.2, 45.6.9.6.3, 45.6.9.6.6
Enhanced fire compartments ..... Table D.2.1.1(a), D.2.5.3, D.2.5.5.2, D.2.7.2.3
Steel 44.3.1
Type IV construction 7.2.5.3, 7.2.5.5.2, D.2.5.3, D.2.5.5.2
Type V construction D.2.7.2.3
Glass ..... Chap. 46; *see also* Glazing
Additions, allowable amount of glass in 15.8.7
Atriums, walls of ..... 8.12.3(1), A.8.12.3(1)(b)
Block ..... 45.6.10(5), 46.5.2.3(5)
Corridor walls, residential board and care occupancies 26.2.3.6.2
Dalle (definition) 3.3.274.1, 46.2.1
Decorative ..... 46.5.2.3(2)
Definition 3.3.274.2, 46.2.2
Fire department access panels 46.5.3
Labeling 46.3
Louvered windows or jalousies ..... 46.4, 46.5.1(6), 46.5.2.3(6)
Performance-based design option 5.2.4.5
For skylights or sloped glazing .....*see* Glazing
Supports 46.9
Wind, snow, and dead loads on 46.10
Wired ..... 8.7.8, 8.12.3(1), 15.6.2.1.4.4, 15.7.3.6.2.2, 15.10.5.7.1, 19.3.7.8, 20.3.7.7(4), 26.3.3.7.18, 46.5.1(3), 46.8.2(1), 46.8.3.5, 46.10.3, A.8.12.3(1)(b), A.19.3.7.8, A.26.3.3.7.18
Glass fiber reinforced plastic .....*see* Plastic
Glazing ..... 4.1.3.3.2.6, Chap. 46; *see also* Glass
Accessible rooms or spaces 12.29
Athletic facilities 46.7
Definition 3.3.276, 35.2.15
Fire door and fire window assemblies ..... 8.4.5.2, 8.7.5.2.1, 8.7.13, 19.3.7.8, 20.3.7.7(4), 26.3.3.7.18, A.19.3.7.8, A.26.3.3.7.18
Fire protection 8.7.13, 46.11
Guards and handrails ..... 46.5.2.1(9), 46.6
Hazardous locations, replacement in 15.3.1.3.2, 15.4.2.3
Human impact loads 46.5
Labeling ..... 46.3, 46.5.1.1 to 46.5.1.3
Nonsymmetrical systems 8.7.11
Plastic ..... 38.11.3.2, 46.8.2(1), 48.7.3, 48.7.6.7, 48.7.7
Definition 3.3.276.1, 48.2.6
Safety glazing ..... 46.5.1.1 to 46.5.1.3, 46.5.2
Security 12.31.4.2, 12.32.5.2
Sloped glass or skylights 38.11, 46.8, 46.10
Definition 3.3.276.2, 38.1.1.11
Supports 35.1.2.8.6
Transom openings 15.6.2.1.4.4, 15.10.5.7.1
Wind, snow, and dead loads on 46.10
Goals 4.1, A.4.1
Definition 3.3.277
Performance-based design option 5.1.2
Golf facilities (accessibility) ..... 12.6.2.15, 12.38, 12.45.12; *see also* Miniature golf facilities (accessibility)
Government buildings .....*see also* Judicial facilities
Renovations 15.4.4.2
Grab bars
Loads on ..... 35.6.5, Table A.35.6.1.2
Swimming pools 12.45.15.4.5, 12.45.15.5.7
Grade
Fire department access roads ..... 7.1.5.2.5.6, A.7.1.5.2.5.6(B), D.1.5.2.5.6
Foundation, site grading for 36.8.5
Ground level (definition) 3.3.278
Ground level, flood resistance (definition) 3.3.278.1, 39.2.13, A.3.3.278.1, A.39.21.3
Grandstands ..... 16.4.8, 32.3.5.3(4), 32.7
Definition 3.3.279, 32.1.3.3, A.3.3.279, A.32.1.3.3
Folding and telescopic seating 32.7.8
Guards and railings 16.4.8.6
Loads ..... 35.6.2.3.2, 35.6.2.3.3, 35.9.1.3.2(4), 35.9.1.5, Table A.35.6.1.2
Maintenance 32.7.7
Portable ..... 16.4.8.3.5, 16.4.8.4, 32.7.5.3(2), 32.7.6
Spaces underneath 16.4.8.5
Special requirements-Type III, Type IV, Type V 32.7.5
Wheelchair spaces 12.21.2.1.2, 12.21.2.1.3
Gravel
Definition 3.3.280, 38.1.1.4
Roof coverings ..... 38.2.1.2(6), 38.4.2, 38.5.2.3
Greenhouses .... 32.2.2.3.2, Table 35.1.2.8.1.1, 48.7.8.4.2(3), 48.9; *see also* Membrane structures
Gridirons ..... 16.2.2.3.2, 16.2.4.6, 16.3.1(2), 16.4.5.7, 16.4.5.8
Definition 3.3.281
Gross floor area .....*see* Floor area, Gross
Gross leasable area 27.4.4.6.1, 27.4.4.6.2
Definition 3.3.33.9, 27.4.4.2.4
Guards 11.1.8, 11.2.2.4, 11.2.5.5, 15.6.2.1.9, A.11.2.2.4
Assembly occupancies 16.2.11.1, A.16.2.11.1.1
Folding and telescopic seating 16.4.8.6.3, 16.4.9.3
Grandstands 16.4.8.6
Definition 3.3.284
Glazing ..... 46.5.2.1(9), 46.6
Helistops 31.9.7
Historic buildings 15.10.4.10
Live loads ..... 35.6.5, Table A.35.6.1.2
Occupancy classification, change of 15.7.3.5.1.1
One- and two-family dwellings 22.2.5
Parking structures 30.8.2.2.3.2
Performance-based design option ..... 5.3.2(2)
Guest (definition) 3.3.285
Guest rooms
Accessibility 12.6.5.3, 12.24, 12.45.3
Platform (wheelchair) lifts 12.6.7.6
Visible alarms 12.15.4
Windows ..... 12.29 Ex. 2
Definition 3.3.534.3, 24.2.1.3
Means of egress 24.1.3.2, 24.2.1.1, 24.2.4.2, 24.2.5.2, 24.2.5.8, 24.2.6, 24.2.9
Means of escape 24.2.1.2
Protection ..... 15.6.2.6.1.1, 24.3.4.4, 24.3.4.9, 24.3.5.3, 24.3.5.6, 24.3.5.7, 24.3.6.5(1), 24.3.7, A.24.3.4.4, A.24.3.4.9
Stairs/ramps, handrails for 11.2.2.4.1.6
Ventilation 49.2.2.7
Guest suites
Definition 3.3.605.1, 24.2.1.3

Copyright National Fire Protection Association
Provided by IHS under license with NFPA
No reproduction or networking permitted without license from IHS
Not for Resale

Means of egress 24.1.3.2, 24.2.1.1, 24.2.4.2, 24.2.5.2, 24.2.5.8, 24.2.6, 24.2.9
Means of escape 24.2.1.2
Protection ..... 24.3.4.4, 24.3.4.9, 24.3.5.6, 24.3.5.7, 24.3.6.5(1), 24.3.7, A.24.3.4.4, A.24.3.4.9
Gutters 38.6.3
Gypsum base for veneer plaster (definition) 3.3.288, 47.1.5.2
Gypsum board 8.14.1.3, 47.1, 47.2, A.47.1.5.9.2
Definition 3.3.289, 47.1.5.3
Fireblocks ..... 8.14.2.4(2)
Storage facilities A.6.1.13.1
Gypsum concrete, reinforced 41.1.2, 41.8
Gypsum lath 47.1.3, 47.1.4, 47.3
Definition 3.3.290, 47.1.5.4
Gypsum panel products (definition) 3.3.291, 47.1.5.5
Gypsum plaster 47.1, 47.3, A.47.1.5.9.2
Definition 3.3.470.1, 47.1.5.8.1
Gypsum veneer plaster 47.1, 47.2.4, 47.2.5, A.47.1.5.9.2
Definition 3.3.470.2, 47.1.5.8.2
Gypsum wallboard 15.7.3.8.1.5
Definition 3.3.294, 47.1.5.6
Inspection ..... 1.7.6.6.3.4(F)
Roofs ..... 22.4.4(3)

-H-

Habitable rooms 15.5.2.1
Definition 3.3.534.4
Hallways ..... *see* Corridors
Halogenated agent extinguishing systems ..... Table 55.5.1
Handling (definition) 3.3.296
Handrails 11.2.2.4, 11.2.5.4.3, 11.2.5.5, A.11.2.2.4
Alternating tread devices 11.2.11.2
Assembly occupancies 16.2.11.1, A.16.2.11.1.1
Folding and telescopic seating 16.4.8.6.3, 16.4.9.3
Grandstands 16.4.8.6
Boat slips ..... 12.45.9.2.1 Ex. 6
Construction site A.14.1
Definition 3.3.297
Demolition operations A.14.1
Dwelling units and guest rooms 11.2.2.4.1.6
Fishing piers and platforms 12.45.11.2, 12.45.11.3
Glazing ..... 46.5.2.1(9), 46.6
Grandstands ..... 32.7.6.1(5)
Historic buildings 15.10.4.10, 15.10.5.10
Live loads ..... 35.6.5, Table A.35.6.1.2
Occupancy classification, change of 15.7.3.5.1.1
One- and two-family dwellings 22.2.5
Play areas 12.45.14.2.5.3
Quality assurance for 40.7
Ramped aisles 16.2.5.6.9, A.16.2.5.6.9
Reconstruction requirements 15.6.2.1.8
Spiral stairways ..... 11.2.2.2.3.2(3) to (6)
Swimming pools, sloped entries for 12.45.15.3.3, 12.45.15.6.2
Hand-wrecking A.14.1
Hangars, aircraft ..... *see* Aircraft hangars
Hardboard 45.5.9
Definition 3.3.298, 45.2.3
Hardware ..... *see* Fire exit hardware; Panic hardware
Hazard of contents ... 6.3, A.6.3.2; *see also* High hazard contents; Low hazard contents; Ordinary hazard contents
Apartment buildings ..... 25.1.4, 34.1.3.2, Table 34.3.2.3
Assembly occupancies ..... 16.1.4, 34.1.3.2, Table 34.1.3.2(a), Table 34.3.2.3
Business occupancies ..... 28.1.4, Table 34.1.3.2(c), Table 34.3.2.3
Classification of 6.3.2, A.6.3.2
Day-care occupancies ..... 18.1.4, 18.6.1.5, 34.1.3.2, Table 34.1.3.2(e), Table 34.3.2.3
Detention and correctional occupancies ..... 21.1.2.4.1, 21.1.2.5, 21.1.2.6, 21.1.4, 34.1.3.2, Table 34.1.3.2(g)
Educational occupancies ..... 17.1.4, 34.1.3.2, Table 34.3.2.3
General requirements ..... Table 34.1.3.2(d)
Health care occupancies ..... 19.1.2.8, 19.1.2.9, 19.1.4, 19.2.5.6.1.3, 34.1.3.2, Table 34.1.3.2(b), Table 34.1.3.2(f), Table 34.3.2.3, A.19.2.5.6.1.3(A)
Ambulatory health care occupancies 20.1.2.6, 20.1.2.7, 20.1.4, 34.1.3.2
Hotels and dormitories ..... 24.1.4, 34.1.3.2, Table 34.3.2.3
Industrial occupancies ..... 29.1.3.1.1(1), 29.1.3.1.2(1), 29.1.3.2, 29.1.4, 29.2.2.10, 29.2.4.1.2, 29.3.1(2), 29.6.4, 34.1.3.3, Table 34.3.2.3
Lodging or rooming houses ..... 23.1.4, 34.1.3.2, Table 34.3.2.3
Mercantile occupancies ..... 27.1.4, 27.2.1.5, 34.1.3.3, Table 34.3.2.3
One- and two-family dwellings ..... 22.1.4, Table 34.3.2.3
Residential board and care occupancies ..... 26.1.4, 34.1.3.2, Table 34.3.2.3
Residential occupancies ..... Table 34.1.3.2(h)
Special hazard protection 8.15, A.8.15.1
Storage occupancies ..... 30.1.4, 30.2.4.1, 30.3.4.1, 34.1.3.3, Table 34.3.2.3
Parking structures 30.8.1.5
Towers ..... 31.6.5.1(6)
Hazardous areas
Apartment buildings 25.3.2
Assembly occupancies 16.3.2, 16.3.4.2.3, A.16.3.4.2.3
Business occupancies 28.3.2, A.28.3.2.2, A.29.3.2.1
Change of use ..... 15.7.2.1.1(5)
Day-care occupancies ..... 18.3.2, A.18.3.2.1(2)(a)
Definition 3.3.33.10, A.3.3.33.10
Detection systems 55.2.2.5
Detention and correctional occupancies 21.4.4.7
Detention and correctional residential housing area 21.3.2, A.21.3.2.1
Educational occupancies 17.3.2
Health care occupancies 19.3.2, 19.4.3.4, A.19.3.2.1, A.19.4.3.4
Ambulatory health care occupancies 20.3.2, A.20.3.2.3.2, A.20.3.2.4
Hotels and dormitories ..... 24.3.2, 24.3.6.5(1)
Industrial occupancies 29.3.2
Mercantile occupancies 27.3.2, A.27.3.2.1
Open structures 31.5.2.9.2
Parking structures 30.8.3.2
Residential board and care occupancies 26.2.3.2, 26.2.3.5.5, 26.3.3.2, A.26.2.3.2.1
Smoke partitions serving ..... 8.10.2(3)
Sprinkler systems 55.3.1.2, 55.3.1.3
Towers 31.6.11.2
Water-surrounded structures 31.7.3
Hazardous (classified) locations
Change of use requirements ..... 15.7.2.4.1(1)
Glazing ..... 15.3.1.3.2, 15.4.2.3, 46.5.1(1), 46.5.2
Hazardous materials ..... 6.3.2.4.1.1; *see also* High hazard contents
Assembly occupancies ..... 16.3.2.1.2(1)(c), 16.3.2.1.2(2)(d), 16.4.1.2(9)
Bulk merchandising retail buildings 27.4.5.3
Day-care occupancies ..... 18.3.2.1(1)(c), 18.3.2.1(2)(d)
Definition 3.3.388.5
Educational occupancies ..... 17.3.2.1(1)(c), 17.3.2.1(2)(d)
Health care occupancies 20.3.2.1
Occupancy category for wind, snow, and earthquake ..... Table 35.3.1
Repairs, use for 15.3.1.3.1
Safety from 4.1.3.4
Spill control and secondary containment 34.3.2.8
Ventilation of ..... 49.2.2.1.4 to 49.2.2.1.8, 49.2.3
Hazardous production material (HPM) 6.3.2.4.6
Definition 3.3.388.6
Gas detection 34.3.7.3.4
Pipes and piping 34.3.7.3.1
Rooms, ventilation of 34.3.7.3.3.2
Sprinkler systems, exhaust ducts 34.3.7.3.8, A.34.3.7.3.8.4
Storage of 34.3.7.2.4

Copyright National Fire Protection Association
Provided by IHS under license with NFPA
No reproduction or networking permitted without license from IHS
Not for Resale

Transportation through exit access corridors 15.6.2.9, 34.3.7.1.2.2, 34.3.7.2.2.2
Hazardous production material (HPM) rooms ..... 34.3.7.2.4.2 to 34.3.7.2.4.6
Definition 3.3.534.5
Emergency alarms 34.3.7.3.6.2
Hazards .....*see also* Fire hazards; Hazard of contents
Floor finish ..... 10.2.2(3)
Identification of 4.1.3.3.2.5
Health 4.1.1, 4.1.4, 15.1.1.1, A.4.1.1, A.4.1.4.1.1, A.4.1.4.5.1, C.1.1
Health care facilities 6.4.2.27, 19.1.1.1.8
Accessibility ..... 12.6.2.3.1 Ex. 1, 12.17.4.6, 12.23, 12.45.2
Definition 3.3.204.4
Detention and correctional occupancies 12.32.4
Means of egress 19.1.2.6
Multiple occupancies 19.1.2, A.19.1.2.2
Health care occupancies ... Chap. 19; *see also* Ambulatory health care occupancies
Building services ..... 19.5, 20.5, 49.2.2.1(6), A.19.5.2.2
Definition 3.3.424.6, 6.1.5.1, A.3.3.424.6, A.6.1.5.1
Egress capacity factors ..... Table 11.3.3.1
Electrical systems ..... 15.3.5(5), 15.5.5.3, 15.5.5.5(5), 19.5.1.2, 19.5.1.3
Ambulatory health care occupancies 20.2.9
Lighting .....*see* Lighting
Safety branch 19.2.9.2, 19.2.10.2
Energy efficiency ..... 51.2.1(3)
Flood-resistant construction ..... 39.11.1.2.2(1)
General requirements ..... 19.1, 34.1.3.2, Table 34.1.3.2(b), Table 34.1.3.2(f), Table 34.3.2.3, A.19.1.1.1.2 to A.19.1.2.3
Ambulatory health care occupancies 20.1, A.20.1.1.1, A.20.1.2.2
Height and area requirements ..... Table 7.4.1, Table 15.7.3.8.1.1, 15.7.3.8.1.3
Live loads ..... Table A.35.6.1.2
Means of egress ..... 15.6.2.1.4.2, 19.2, 19.4.3.2, 19.4.3.3, A.19.2.2 to A.19.2.5.6.3.2(C)
Ambulatory health care occupancies ..... 20.1.2.3 to 20.1.2.5, 20.2
Multiple occupancies ..... 19.1.2.5 to 19.1.2.7
Multiple occupancy 19.1.2, A.19.1.2.2
Ambulatory health care occupancies 20.1.2, A.20.1.2.2
Occupancy category for wind, snow, and earthquake ..... Table 35.3.1
Occupancy classification 19.1.3, 20.1.3
Change of ..... 15.7.3.4.3, Table 15.7.3.5.1.1, 15.7.3.8.1.3, Table 15.7.3.9.1.1, 15.7.3.11, 19.1.1.1.3, 19.1.1.4.2, 20.1.1.2
Occupant load ..... Table 11.3.1.2, 19.1.7, 20.1.7
Parking spaces, accessible 12.8.2.1, 12.8.2.2
Passenger loading zones 12.9.3
Plumbing systems ..... 15.7.3.11, 53.1(3)
Protection ..... 19.3, 20.3, 55.2.3.5.1, A.19.3.2.1 to A.19.3.2.6, A.20.3.2.3.2 to A.20.3.7.7
Rehabilitation of 19.1.1.1.3, 19.1.1.4, A.19.1.1.4.3
Additions 19.1.1.4.1, 20.1.1.1.3
Ambulatory health care occupancies 20.1.1.1.2, 20.1.1.1.3, 20.1.1.2
Change of occupancy classification ..... 15.7.3.4.3, Table 15.7.3.5.1.1, 15.7.3.8.1.3, Table 15.7.3.9.1.1, 15.7.3.11, 19.1.1.1.3, 19.1.1.4.2, 20.1.1.2
Change of use requirements ..... 15.7.2.4.1(7), Table 15.7.3.8.1.1
Modifications ..... 15.5.1.3.5, 15.5.2.2, 15.5.5.5(5)
Nonsprinklered buildings 19.4.3, A.19.4.3.1. A.19.4.3.4
Reconstruction 15.6.2.1.4.2, 15.6.2.4.1, 15.6.2.5.2.3
Repair ..... 15.3.5(5)
Special provisions 19.4, 20.4, A.19.4.3.1, A.19.4.3.4
Suites .....*see* Suites
Health hazard materials (definition) ..... 3.3.388.7; *see also* Corrosive material; Toxic material
Heat detectors 15.6.2.7.1, 17.3.4.2.3.1, 55.3.1.4, A.17.3.4.2.3.1, A.55.3.1.4
Heat exchangers 15.3.6.2
Heating, ventilating, and air conditioning (HVAC) systems ....*see also* Air-conditioning systems; Ducts and air transfer openings; Heating systems; Ventilation
Alarm systems 55.2.3.2.2
Apartment buildings ..... Table 25.3.2.2, 25.5.2
Assembly occupancies .... 16.4.2.1(4), 16.4.6.6, 16.5.2, 49.2.2.1(1)
Business occupancies ..... 28.5.2, 49.2.2.1(2)
Day-care occupancies ..... 18.5.2, 49.2.2.1(4)
Detention and correctional occupancies ..... Table 21.4.4.7, 21.5.2, 49.2.2.1(5)
Detention and correctional residential housing area ..... Table 21.3.2.1
Educational occupancies ..... 17.5.2, 49.2.2.1(3)
Health care occupancies ..... 19.5.2, 49.2.2.1(6), A.19.5.2.2
Ambulatory health care occupancies 20.5.2
Hotels and dormitories ..... Table 24.3.2.3, 24.5.2, 49.2.2.7
Industrial occupancies 29.5.2
Lodging or rooming houses 23.3.5.3, 23.5.2
Mercantile occupancies ..... 27.5.2, 49.2.2.1(7)
One- and two-family dwellings 22.5, 49.2.2.7
Performance-based design option 5.3.5.6
Permits 1.7.6.1.1.2
Residential board and care occupancies ..... 26.2.3.6.3, 26.2.5.2, Table 26.3.3.2.2, 26.3.6.2, 49.2.2.7
Storage occupancies 30.5.2, 49.2.2.3
Parking structures 30.8.5.2
Weight of equipment (dead load) 35.5.2
Heating systems ..... 50.1(9); *see also* Ducts and air transfer openings; Heating, ventilating, and air conditioning (HVAC) systems
Masonry heaters 32.12
Membrane structures 32.2.1.5.1
Performance-based design option 5.3.5.6
Permits 1.7.6.1.1.2
Tents ..... 32.3.6.3 to 32.3.6.7
Heat release rate (HRR) (definition) 3.3.307, A.3.3.307
Height .....*see also* Building height
Story (definition) 3.3.308.2
Wall (definition) 3.3.308.3
Heliports ..... 6.4.2.28, 32.15, 35.14.3; *see also* Rooftop landing pads
Definition 3.3.309, A.3.3.309
Health care occupancies 19.3.2.2, A.19.3.2.2
Helistops 31.9, 35.14.3
Definition 3.3.310
High challenge fire walls ..... 8.3, A.8.3.1.1 to A.8.3.3.10.4
High explosive material .....*see* Explosive material
High hazard contents ..... 6.3.2.4, Chap. 34, A.6.3.2.4.1.3
All occupancies, requirements for 34.2
Apartment buildings ..... 25.1.4.2, Table 34.3.2.3
Assembly occupancies ..... 16.1.4.2, 34.1.3.2, Table 34.1.3.2(a), Table 34.3.2.3
Business occupancies ..... 28.1.4.2, 34.1.3.2, Table 34.1.3.2(c), Table 34.3.2.3
Classification 34.1.2
Day-care occupancies ..... 18.1.4.2, 34.1.3.2, Table 34.1.3.2(e), Table 34.3.2.3
Detention and correctional occupancies ..... 21.1.2.4.1, 21.1.2.6, 21.1.4.2, 34.1.3.2, Table 34.1.3.2(g), Table 34.3.2.3
Educational occupancies ..... 17.1.4.2, 34.1.3.2, Table 34.3.2.3
Electrical system modification in occupancies with 15.5.5.3
Enhanced fire compartments D.4.3.3.6
General requirements ..... Table 34.1.3.2(d)
Health care occupancies ..... 19.1.2.9, 19.1.4.2, 34.1.3.2, Table 34.1.3.2(b), Table 34.1.3.2(f), Table 34.3.2.3
Ambulatory health care occupancies 20.1.2.7, 20.1.4.2, 34.1.3.2

Copyright National Fire Protection Association
Provided by IHS under license with NFPA
No reproduction or networking permitted without license from IHS
Not for Resale

Height and area requirements for occupancies with ..... Table 7.4.1
Hotels and dormitories 24.1.4.2
Industrial occupancies ..... 29.1.3.2, 29.2.2.10, 29.3.1(2), 29.6.4, 34.1.3.3, Table 34.3.2.3
Lodging or rooming houses 23.1.4.2
Maximum allowable quantities per control area, occupancies exceeding 34.3, A.34.3.2.6, A.34.3.7.3.8.4
Means of egress for occupancies with ..... 11.2.1.4.2(4), 11.11
Egress capacity factors ..... Table 11.3.3.1
Towers ..... 11.2.13.1(4)
Travel distance to exits for areas containing 11.6.4
Mercantile occupancies ..... 27.1.4.2, 27.2.1.5, 34.1.3.3, Table 34.3.2.3
Multiple hazards 34.1.2.2
Occupancy classification, change of ..... Table 15.7.3.5.1.1
Exterior walls, exposure of ..... Table 15.7.3.9.1.1
Height and area requirements ..... Table 15.7.3.8.1.1
Quantity limits 34.1.3
Residential board and care occupancies ..... 26.1.4.2, Table 34.3.2.3
Residential occupancies ..... 34.1.3.2, Table 34.1.3.2(h), Table 34.3.2.3
Separation of occupancies 34.3.2.3, 34.3.3.3, 34.3.4.3, 34.3.7.2.4.6
Storage occupancies ..... 30.1.4.2, 34.1.3.3, Table 34.3.2.3
Towers ..... 31.6.5.1(6)
Unlimited area buildings 7.6.3.6
High hazard materials, conveying of 8.3.2.9.5, 8.3.2.10.5, 8.3.2.11, A.8.3.2.11
Highly toxic material .....*see* Toxic material
High-piled storage (material) (definition) 3.3.589.1
High-rise buildings ..... Chap. 33
Apartment buildings 25.4
Assembly occupancies 16.4.4
Business occupancies 28.4.2, A.28.4.2
Day-care occupancies 18.4.2
Definition 3.3.65.10, A.3.3.65.10
Detention and correctional occupancies 21.3.5.1, 21.4.3, A.21.4.3
Educational occupancies 17.4.2
Emergency lighting ..... 11.9.1.1(3), 33.2.4.1
Flame spread leap frog effect, control of A.8.9.3.1
Health care occupancies 19.2.2.2.9, 19.4.2
Hotels and dormitories 24.4.2, 24.5.3.2, A.24.5.3.2
Industrial occupancies 29.4.2
Mercantile occupancies 27.4.2
Multiple occupancy 6.2.3.4, 33.1.2
Occupancy classification, change of ..... 15.7.3.4.1(3)
Protection 1.7.6.3.1.9, 33.2, 55.3.1.6, A.33.2.1.1
Reconstruction requirements 15.6.2.6.7
Residential board and care occupancies 26.3.3.4.5, 26.3.5, 26.3.6.3.2
Storage occupancies 30.4.2
High velocity wave action (flood resistance) ..... 35.4.2.6.2(3), 36.2.4.2, 36.6.1.3, 39.7.2, 39.8.2, 39.11.2, 39.12.3.2, A.39.11.2, C.6.2(1), C.7.2
Definition 3.3.312, 39.2.14
Historic buildings 15.10
Accessibility ..... 12.2.5, 12.6.2.3.1 Ex. 7, 12.6.4 Ex. 2, 15.10.1.4
Definition 3.3.65.11, 15.2.2.8
Energy efficiency 15.10.1.5
Flood-resistant construction 5.2.8.2, 39.13.2, A.5.2.8.2, C.4.2
Definition 3.3.65.11, 39.2.3.2
Investigation and evaluation 15.10.1.2
Location on property 15.10.3.3, 15.10.5.3
Means of egress ..... 15.10.4.4 to 15.9.4.11, 15.10.5.5, 15.10.5.10 to 15.9.5.12
Modifications 15.5.1.2
Occupancy classification, change of 15.10.5
Reconstruction 15.6.1.2
Relocation 15.10.1.1.1, 15.10.3
Renovation, modification, or reconstruction 15.4.1.2, 15.10.1.1.1, 15.10.3.1, 15.10.4
Repairs 15.10.1.1.1, 15.10.2, 15.10.3.1, 15.10.4
Historic preservation (definition) 3.3.318
Historic structures (definition) ..... 3.3.601.5, A.3.3.601.5; *see also* Historic buildings
Holding cells 12.31.3, 12.32.2, 12.32.3, 12.45.4
Homes
Day-care .....*see* Day-care homes
Manufactured .....*see* Manufactured homes
Nursing .....*see* Nursing homes
Hoods, kitchen 15.7.3.4.6
Horizontal assemblies 8.1.2.1, 8.6
Continuity 8.6.5
Day-care occupancies 18.3.5.2
Fire resistance ratings 8.6.1
Joints 8.6.4
Occupancy classification, change of 15.7.3.2.2, 15.7.3.8.1.4
Openings 8.6.2
Parking structures 7.4.3.6.5
Penetrations .....*see* Penetrations
Horizontal exits
Apartment buildings 25.2.2.5
Assembly occupancies 16.2.2.5
Business occupancies 28.2.2.5
Day-care occupancies 18.2.2.5
Detention and correctional occupancies 21.1.2.4, 21.2.2.5, 21.3.7.1.1, 21.4.4.3, A.21.4.4.3
Educational occupancies 17.2.2.5
Health care occupancies 19.1.2.5, 19.2.2.5, 20.1.2.4
Hotels and dormitories 24.2.2.5
Industrial occupancies 29.2.2.5, 29.6.2.3, A.29.2.2.5.2
Lodging or rooming houses 23.2.1.2
Mercantile occupancies 27.2.2.5
Parking structures 30.8.2.2.5
Residential board and care occupancies 26.2.2.1.2, 26.3.2.1.5
Storage occupancies 30.2.2.5, 30.6.2.3, A.30.2.2.5.2
Horizontal separation ..... 6.2.4.3, 6.2.4.4, 7.3.2.2, 7.3.3, 7.3.4, 24.2.4.2(5), A.8.1.2.1
Apartment buildings ..... 25.2.4.3(5)
Definition 3.3.322
Enhanced fire compartments D.3.4
Exterior walls 7.2.4.2.1, 8.2.2.4.5
Hotels and dormitories ..... 24.2.4.2(5)
Type III construction 7.2.4.2.1
Type IV construction 7.2.5.6.7
Unprotected openings, maximum allowable area of ..... Table 7.3.5(a), Table 7.3.5(b)
Horizontal sliding doors .....*see* Doors, Sliding
Hose connections, mall buildings 27.4.4.7.2
Hospitals ..... A.4.1.6.3.2, A.6.1.5.1(1); *see also* Health care occupancies
Accessibility 12.17.4.6, 12.23.2
Capacity of means of egress 19.2.3.3, 19.2.3.5, A.19.2.3.3
Change of occupancy classification 19.1.1.4.2
Definition 3.3.323
Horizontal exits 19.2.2.5.1
Live loads ..... Table A.35.6.1.2
Occupancy category for wind, snow, and earthquake ..... Table 35.3.1
Parking spaces, accessible 12.8.2.1
Psychiatric .....*see* Limited care facilities
Subdivision of building space 19.3.7.4, 19.3.7.5, A.19.3.7.5
Hotels and dormitories ..... Chap. 24; *see also* Guest rooms; Guest suites
Apartment-style dormitories ..... 24.1.2; *see also* Apartment buildings
Building services 24.3.2.1, 24.5, 49.2.2.7, A.24.5.3.2
Definitions
Dormitories 3.3.165, 6.1.8.1.4, A.3.3.165, A.6.1.8.1.4
Hotels 3.3.325, 6.1.8.1.3, A.3.3.325, A.6.1.8.1.3
Energy efficiency ..... 51.2.1(7)

--`,,```,,,,````-`-`,,`,,`,`,,`---

Copyright National Fire Protection Association
Provided by IHS under license with NFPA
No reproduction or networking permitted without license from IHS

Not for Resale

Flood-resistant construction ..... 39.11.1.2.2(5)
General requirements ..... 24.1, 34.1.3.2, Table 34.1.3.2(h), Table 34.3.2.3
High-rise buildings 24.4.2, 24.5.3.2, A.24.5.3.2
Historic buildings
Stairways 15.10.5.12
Transoms 15.10.4.6
Live loads ..... Table A.35.6.1.2
Means of egress ..... 24.1.3.2, 24.2, A.24.2.2.12.1 to A.24.2.7.2
Multiple occupancies 17.1.2.3, 24.1.3
Occupancy classification 24.1.5
Occupant load ..... Table 11.3.1.2, 24.1.7, 24.2.3.2, 24.2.3.3, A.24.2.3.3
Protection ..... 24.3, A.24.3.4.3 to A.24.3.5.1
Rehabilitation of 24.1.1.2
Modifications 24.3.5.1, A.24.3.5.1
Reconstruction 15.6.2.6.1.1, 15.6.2.7.3
Separated occupancies, fire-resistant rated separations for ..... Table 6.2.4.1(b)
Hot tubs
Definition 3.3.324, 32.1.3.4, A.3.3.324, A.32.1.3.4
Glazing, door/enclosure .... 46.5.2.1(5), 46.5.2.1(6), 46.5.2.1(10)
Hydrants, fire 55.8
Hydrogen systems
Gaseous, facilities housing 6.4.2.29
Liquefied, facilities housing 6.4.2.30
Hydromassage bathtubs ..... 15.5.5.5(7)
Hydrostatic pressure, retaining walls 36.9.2
Hydrostatic uplift 35.14.2
Hypobaric facilities 6.4.2.31
Definition 3.3.204.5

-I-

Ice loads 35.13
Identification .....*see also* Labeled/labeling; Signs (marking)
Fiberboard 45.5.8.2
Fire-retardant-treated wood 45.5.15.1
Glazing, fire protection-rated 8.7.13
Lumber grade 45.5.2
Particleboard 45.5.10.2
Preservative-treated wood 45.5.11.2, 45.5.11.4, 45.5.11.5
Steel 44.1.2
Wood structural panels 45.5.7.2
Illuminated .....*see also* Lighting
Externally ..... 11.10.1.5, 11.10.5.1, 11.10.6, A.11.10.1.5, A.11.10.5.1, A.11.10.6.1 to A.11.10.6.3
Definition 3.3.327.1, A.3.3.327.1
Internally 11.10.1.6, 11.10.5.1, 11.10.7, A.11.10.1.6, A.11.10.5.1, A.11.10.7.2
Definition 3.3.327.2, A.3.3.327.2
Immediate occupancy scenario 5.2.3.3, 5.5.3.2, A.5.2.3.3
Imminent danger (definition) 3.3.328
Importance factor *(I)*
Definition 3.3.206.1, 35.2.16
Occupancy ..... 35.4.2.5(5), 35.10.2, A.35.10.2
Definition 3.3.206.1.1, 35.2.23
Wind 35.9.4, A.35.9.4.2
Improvement operations ..... 4.5.5; *see also* Construction
Incapacitation (definition) 3.3.329
Incinerators
Apartment buildings 25.5.4
Assembly occupancies 16.5.4
Business occupancies 28.5.4
Day-care occupancies 18.5.4
Detention and correctional occupancies 21.5.2.3, 21.5.4
Educational occupancies 17.5.4
Facilities housing 6.4.2.32
Health care occupancies 19.5.4
Ambulatory health care occupancies 20.5.4
Hotels and dormitories 24.5.4
Industrial occupancies 29.5.4
Mercantile occupancies 27.5.4
Residential board and care occupancies 26.3.6.4
Storage occupancies 30.5.4
Parking structures 30.8.5.4
Incompatible material (definition) 3.3.388.8
Indexes .....*see* Flame spread index; Smoke developed index
Industrial equipment, access to ..... 11.3.4.1.2(3), 29.2.5.3, 30.2.2.3.1(2), 30.2.2.6(2)
Industrial occupancies ..... Chap. 29; *see also* Aircraft hangars
Accessibility 29.1.7
Ancillary facilities 29.2.5.2, A.29.5.2.2
Building services 29.5, 49.2.2.1.1
Definition 3.3.424.7, 6.1.12.1, A.3.3.424.7, A.6.1.12.1
Energy efficiency ..... 51.2.2(2)
Enhanced fire compartments D.6.2, D.7.4
Flood-resistant construction ..... 39.11.1.2.1(7)
General ..... Table 11.3.1.2, 29.1.3.1.1, Table 34.3.2.3
Definition 3.3.424.7.1, A.3.3.424.7.1
General requirements ..... 29.1, 34.1.3.3, Table 34.3.2.3, A.29.1.1.1, A.29.1.6
Guards, loads on 35.6.5.2
Height and area requirements ..... Table 7.4.1, Table 15.7.3.8.1.1
Low-hazard processes requiring unusual heights 7.4.3.6.3, A.7.4.3.6.3
High-rise buildings 29.4.2
Incidental operations 29.1.3.2
Laboratories ..... 17.1.1.3(5)
Live loads ..... Table A.35.6.1.2
Means of egress ..... 29.2, 29.6, A.29.2.1 to A.29.2.9, A.29.6
Means of escape ..... 29.2.2.9 to 29.2.2.11
Multiple occupancy ..... 6.2.1.3(1), 29.1.2
Occupancy classification 29.1.3
Change of ..... Table 15.7.3.5.1.1, Table 15.7.3.8.1.1, Table 15.7.3.9.1.1, 29.1.3.3
Occupant load 29.1.6, A.29.1.6
Occupant load factor ..... Table 11.3.1.2, 29.2.4.2, 29.3.4.1
Protection 29.3, A.29.3.5
Rehabilitation of ..... Table 15.7.3.5.1.1, Table 15.7.3.8.1.1, Table 15.7.3.9.1.1, 29.1.1.2, 29.1.3.3
Separated occupancies, fire-resistant rated separations for ..... Table 6.2.4.1(b)
Special-purpose ..... 6.4, Table 11.3.1.2, 29.1.3.1.2, 29.2.3(2), 29.2.9.2(1), 29.3.1(2), Table 34.3.2.3, D.7.4
Definition 3.3.424.7.2
Unlimited area buildings 7.6.3.1, 7.6.3.2.1, 7.6.3.4
Initiation, alarm ..... 55.2.1.3, 55.2.2, 55.5.2, A.55.2.2.1.4 to A.55.2.2.6.3
Apartment buildings 25.3.4.2
Assembly occupancies 16.3.4.2, 16.4.7.5, A.16.3.4.2.3
Business occupancies 28.3.4.2
Day-care occupancies 18.3.4.2
Detention and correctional occupancies 21.3.4.2, 21.4.4.9.1
Educational occupancies ... 17.3.4.2, A.17.3.4.2.3.1, A.17.3.4.2.3.2
Health care occupancies 19.3.4.2, A.19.3.4.2.1
Ambulatory health care occupancies 20.3.4.2
High-rise buildings 33.1.3.1
Industrial occupancies 29.3.4.2
Lodging or rooming houses 23.3.4.2
Mercantile occupancies 27.3.4.2
Bulk merchandising retail buildings 27.4.5.4.2
Malls 27.4.4.10.2
Residential board and care occupancies ... 26.3.3.4.2, 26.3.3.4.8.1
Semiconductor fabrication facilities 34.3.7.3.6.4
Storage occupancies 30.3.4.2
Parking structures 30.8.3.4.2
Inorganic (definition) 3.3.334, 38.1.1.5
Input data specification 5.1.4
Definition 3.3.579.2
Performance-based design option ..... 5.4.1.2, 5.5.1.4 to 5.5.1.6, 5.6.3, 5.8.7
Inspection agent 40.3.1.2, 40.3.1.3, 40.3.4.1
Definition 3.3.14, 3.3.336, 40.1.3.2

Copyright National Fire Protection Association
Provided by IHS under license with NFPA
No reproduction or networking permitted without license from IHS
Not for Resale

Inspections ..... *see also* Tests
Building permits, issuance of ..... 1.7.6.6, A.1.7.6.6.3.4(C)
Concealed work 1.7.1.6, 1.7.6.6.3.1
Fabricators 40.3.4
Fill, use of 36.2.4.4
Final ..... 1.7.6.6.3.4(P), 1.7.6.6.3.5
Foundations 40.3.6
In-situ soils and controlled structural fill 40.3.5
Liability and 1.7.4.2
Mandatory ..... 1.7.6.6.3, A.1.7.6.6.3.4(C)
Prefabricated assemblies, inspection of ..... 1.7.6.6.1.3, 1.7.6.6.2, 1.7.6.6.3.4(O), 40.3.4
Reports 1.7.6.6.4
Right of entry 1.7.1.3
Special inspection ..... *see* Special inspections
Structural elements ..... 1.7.6.6.3.4, A.1.7.6.6.3.4(C)
Structural units 1.7.6.6.2
Unsafe buildings 1.7.5.3.3
Insulation ..... 8.16; *see also* Foam plastic insulation
Cellulose ..... 8.16.2.1(2), 8.16.3.1(2), 8.16.6
Concealed 8.16.2
Exposed 8.16.3
Fiberboard 45.6.11
Fireblocks ..... 8.14.2.4(2), 8.14.2.5
Inspection ..... 1.7.6.6.3.4(E)
Loose-fill ..... 8.16.2.1(2), 8.16.3.1(2), 8.16.5, 8.16.6
For penetrating items 8.8.4
Pipe and tubing 8.16.7
Roofs ..... *see* Roof assemblies/roofs
Type I and Type II construction ..... 7.2.3.2.13(1), 7.2.3.2.13(3), D.2.3.2.13
Interior environment ..... 4.1.4.1, Chap. 49, A.4.1.4.1.1; *see also* Lighting; Ventilation
Indoor winter design comfort conditions 49.7
Performance-based design option ..... 5.3.5.7, 5.3.5(A)
Sound transmission 49.4
Space dimensions, interior 49.5
Special requirements for occupancies 49.8
Interior finish ..... Chap. 10
Apartment buildings ..... 25.3.3, Table A.10.2
Assembly occupancies ..... 16.3.3, Table A.10.2
Special amusement buildings 16.4.7.8
Business occupancies ..... 28.3.3, Table A.10.2
Ceilings ..... 10.1.2, 10.2.1, 10.3 to 10.5, A.10.3.1 to A.10.3.6.1, A.10.4
Apartment buildings 25.3.3.2
Assembly occupancies 16.3.3.2, 16.3.3.3
Business occupancies 28.3.3.2
Day-care occupancies 18.3.3.2, 18.6.3.3.2
Definition 3.3.211.1
Detention and correctional occupancies 21.3.3.2, 21.4.4.8.1
Educational occupancies 17.3.3.2, A.17.3.3.2
Exit enclosures 11.1.4.1, 15.6.2.2.2.1, A.11.1.4.1
Health care occupancies 19.3.3.2, 19.4.3.5.2, 20.3.3.2
Historic buildings 15.10.4.7, 15.10.4.9, 15.10.5.8, 15.10.5.9
Hotels and dormitories 24.3.3.2
Industrial occupancies 29.3.3.2
Lodging or rooming houses 23.3.3.1
Mercantile occupancies 27.3.3.2
Occupancy classification, change of ..... 15.7.3.4.1(2)
One- and two-family dwellings 22.3.3.2
Reconstruction 15.6.2.2.1, 15.6.2.2.2
Residential board and care occupancies 26.2.3.3.2, 26.3.3.3.2
Storage occupancies 30.3.3.2, 30.8.3.3.2
Towers ..... 31.6.5.1(4)
Cellular or foamed plastic 10.4.3, A.10.4.3.1
Corridors 15.6.2.2.2.1
Assembly occupancies 16.3.3.2, 16.3.3.5
Educational occupancies 17.3.3.3
Health care occupancies 19.3.3.2.2, 19.4.3.5.2.2, 20.3.3.2, 20.3.3.3.2
Day-care homes ..... Table A.10.2
Day-care occupancies ..... 18.3.3, 18.6.3.3, Table A.10.2
Definition 3.3.211.2, A.3.3.211.2
Detention and correctional occupancies ..... 21.3.3, 21.4.4.8, Table A.10.2
Educational occupancies ..... 17.3.3, Table A.10.2, A.17.3.3.2
Enhanced fire compartments ..... D.2.3.2.13(4)
Exit enclosures 11.1.4, 15.6.2.2.2, 15.10.4.7, 16.3.3.5, 17.3.3.3, 18.3.3.3, 18.6.3.3.2.1, 20.3.3.2, 20.3.3.3.2, A.11.1.4.1, A.11.1.4.2
Expanded vinyl 10.4.2, A.10.4.2
Fire-retardant coatings 10.3.1.3, 15.6.2.2.1, A.10.3.1.3
Floors 10.2.2, 10.6, 15.4.2.2, A.10.2.2, A.10.6
Apartment buildings 25.3.3.3
Assembly occupancies 16.3.3.5
Business occupancies 28.3.3.3
Day-care occupancies 18.3.3.3
Definition 3.3.211.3, A.3.3.211.3
Detention and correctional occupancies 21.3.3.3, 21.4.4.8.2
Educational occupancies 17.3.3.3
Enhanced fire compartments ..... D.2.3.2.13(4)
Exit enclosures 11.1.4.2, A.11.1.4.2
Health care occupancies 19.3.3.3, 19.4.3.5.3, 20.3.3.3
Hotels and dormitories 24.3.3.3
Industrial occupancies 29.3.3.3
Inspection ..... 1.7.6.6.3.4(N)(4)
Lodging or rooming houses 23.3.3.2
Mercantile occupancies 27.3.3.3
One- and two-family dwellings 22.3.3.3
Parking structures 30.8.3.3.3
Residential board and care occupancies 26.2.3.3.3, 26.3.3.3.3
Storage occupancies 30.3.3.3
Type I and Type II construction ..... 7.2.3.2.13(4)
Foam plastic 48.4.4.3, 48.5.2, 48.5.3
Health care occupancies 19.3.3, 19.4.3.5
Ambulatory health care occupancies 20.3.3
Hotels and dormitories ..... 24.3.3, Table A.10.2
Industrial occupancies ..... 29.3.3, Table A.10.2
Limiting fire spread 4.4.7.1
Live loads 35.6.9.1
Lodging or rooming houses ..... 23.3.3, Table A.10.2
Mercantile occupancies ..... 27.3.3, Table A.10.2
One- and two-family dwellings ..... 22.3.3, Table A.10.2
Plastic 48.4.4.3, 48.5, 48.6.1, 48.7.1.2
Projection screens 16.3.3.4
Reconstruction 15.6.2.2
Renovations 15.4.2.1, 15.4.2.2
Residential board and care occupancies 26.2.3.3, 26.3.3.3, A.26.3.3.3
Sprinkler systems, use of 10.7
Storage occupancies ..... 30.3.3, Table A.10.2
Parking structures 30.8.3.3
Testing and classification ..... 10.1, 10.3, 10.6, A.10.1, A.10.3.1 to A.10.3.6.1, A.10.6
Textiles ..... 10.4.1, A.10.4.1(4)
Towers ..... 31.6.5.1(4)
Trim and incidental finish 10.5
Plastic 48.5, 48.7.1.2
Thermal barriers ..... 48.3.3.4(9)
Type I and Type II construction ..... 7.2.3.2.13(4), D.2.3.2.13(4)
Underground structures ..... 31.2.4(3)
Use of 10.2, A.10.2
Walls ..... 10.1.2, 10.2.1, 10.3, 10.4, 10.5, A.10.3.1 to A.10.3.6.1, A.10.4
Apartment buildings 25.3.3.2
Assembly occupancies 16.3.3.2, 16.3.3.3
Business occupancies 28.3.3.2
Day-care occupancies 18.3.3.2, 18.6.3.3.2
Definition 3.3.211.4
Detention and correctional occupancies 21.3.3.2, 21.4.4.8.1
Educational occupancies 17.3.3.2, A.17.3.3.2

Copyright National Fire Protection Association
Provided by IHS under license with NFPA
No reproduction or networking permitted without license from IHS
Not for Resale

Exit enclosures 11.1.4.1, 15.6.2.2.2, A.11.1.4.1
Health care occupancies 19.3.3.2, 19.4.3.5.2, 20.3.3.2
Historic buildings 15.10.4.7, 15.10.4.9, 15.10.5.8, 15.10.5.9
Hotels and dormitories 24.3.3.2
Industrial occupancies 29.3.3.2
Lodging or rooming houses 23.3.3.1
Mercantile occupancies 27.3.3.2
Occupancy classification, change of ..... 15.7.3.4.1(2)
One- and two-family dwellings 22.3.3.2
Reconstruction 15.6.2.2.1, 15.6.2.2.2
Residential board and care occupancies 26.2.3.3.2, 26.3.3.3.2
Storage occupancies 30.3.3.2, 30.8.3.3.2
Towers ..... 31.6.5.1(4)
Interior surfaces (definition) 3.3.607.2, 47.1.5.9.1
Internally illuminated ..... *see* Illuminated
Interstitial spaces ..... *see* Concealed spaces

-J-

Joints 8.9, 37.5.3, A.8.9
Definition 3.3.343
Enclosures for ..... 8.12.1.3(2), A.8.12.1.3(2)
Fire barrier walls 8.4.7
Fire walls 8.3.1.5, 8.3.2.9.2.3, 8.3.3.12
Floor-ceiling and roof-ceiling assemblies 8.6.4
Gypsum-board systems 47.2.1.2
Plans for 1.7.6.3.1.6
Quality assurance for 40.9
Radon protection 49.2.5.3.3.2, 49.2.5.3.5.7
Smoke barriers 8.11.7
Smoke partitions 8.10.6
Judicial facilities A.6.1.11.1
Accessibility ..... 12.6.2.4 Ex. 1, 12.31
Assistive listening systems ..... 12.19.2 Ex
Entrances for inmates or detainees 12.6.4.9
Wheelchair (platform) lifts 12.6.7.4
Jurisdiction (definition) ..... 3.3.344; *see also* Authority having jurisdiction

-K-

Kiosks, mall 27.4.4.12
Kitchens 15.3.7.2
Accessibility 12.12, 12.45.3.2.6, 12.45.5.4
Appliances for ..... 15.3.5(6)
Commercial ..... *see* Cooking equipment/facilities, commercial
Modifications, electrical system 15.5.5.4.3.2, 15.5.5.4.4

-L-

Labeled/labeling
Definition 3.2.4
Fire-retardant-treated wood 45.5.15.1
Foam plastic insulation 48.3.1, 48.4.1.7
Glass ..... 46.3, 46.5.1.1 to 46.5.1.3
Laboratories
Chemicals, using 6.4.2.33
Day-care occupancies ..... 18.2.9(5)
Health care occupancies ..... Table 19.3.2.1, 19.3.2.2, 20.3.2.1, A.19.3.2.2
Industrial ..... 17.1.1.3(5)
Instructional ..... 17.1.1.3(4), 17.3.2.3
Ventilation 49.2.3
Ladders ..... 12.3.4; *see also* Fire escape ladders
Live loads ..... Table A.35.6.1.2
One- and two-family dwellings, access to areas of 22.2.5.4
Window well, attached to ..... 22.2.2.4.3.2(4)
Landings 11.2.2.3.1.2, 11.2.2.3.2, 11.2.2.3.3, 11.2.5.4.2, 11.2.5.4.3, A.11.2.2.3.3.2
Area of refuge, exit from 11.2.12.2.3, A.11.2.12.2.3
Area of refuge within 11.5.4.4
Catwalks, galleries, and gridirons 16.2.2.3.2.1
Detection systems ..... 21.2.2.3.1(2)
Glazing adjacent to ..... 46.5.2.1(11), 46.5.2.2(4)
Handrails 15.6.2.1.9.1
Industrial occupancies ..... 29.2.2.3.1(1)
Storage occupancies ..... 30.2.2.3.1(1)
Water accumulation 11.2.2.7.5, 11.2.5.7.2, A.11.2.2.7.5
Large areas ..... *see also* Atriums; Mall
Doors 15.6.2.1.4.1
Lathing .... 15.7.3.8.1.5, 15.10.5.9, 26.2.3.6.1(1); *see also* Gypsum lath
Historic buildings 15.10.4.9
Inspection ..... 1.7.6.6.3.4(F)
Portland cement 47.4.2.2, 47.4.3.1
Laundry areas
Apartment buildings ..... Table 25.3.2.2
Assembly occupancies ..... 16.3.2.1.2(2)(a)
Day-care occupancies ..... 18.3.2.1(2)(a), A.18.3.2.1(2)(a)
Detention and correctional occupancies ..... Table 21.4.4.7
Educational occupancies ..... 17.3.2.1(2)(a)
Health care occupancies ..... Table 19.3.2.1
Hotels and dormitories ..... Table 24.3.2.3
Modifications, electrical systems 15.5.5.4.3.3, 15.5.5.4.4
Residential board and care occupancies ..... Table 26.3.3.2.2
Laundry chutes ..... *see* Chutes, rubbish and laundry
Laundry equipment 12.14
Lavatories 12.13.3.4, 12.45.2.4, 12.45.3.2.4, 12.45.4.2.3
Day-care occupancies 18.3.6
Educational occupancies 17.3.6
Replacement fixtures 15.3.7.2
Lawn seating (accessibility) 12.21.5
Leaks ..... *see* Uncontrolled moisture
Legitimate stages ..... *see* Stages
Levels of exit discharge ..... *see* Exit discharge
Liability for code enforcement 1.7.4
Libraries ..... A.6.1.2.1(13), Table A.35.6.1.2
Life safety ..... *see also* Means of egress
Building rehabilitation 15.1.2.4.2, A.15.1.2.4.2
Compliance options ..... 4.3; *see also* Performance-based design option
Day-care homes 18.1.1.4, 18.6.1.1.2
Day-care occupancies ..... 18.1.1.4 to 18.1.1.6, 18.6.1.1.2
Evaluation
Assembly occupancies 16.1.6.2, 16.4.1, 16.4.2.2, A.16.4.1.1, A.16.4.1.3
Definition 3.3.347
Occupancy classification, change of 15.7.3.5
Requirements 4.4, A.4.4.1. A.4.4.4
Light-diffusing systems ..... *see also* Light-transmitting plastic
Ceilings 48.7.4, A.48.7.4.1
Definition 3.3.608.8, 48.2.2, A.3.3.608.8, A.48.2.2
Electrical fixtures 48.7.5, A.48.7.5.1
Plenums 7.2.3.2.17, D.2.3.2.17
Lighting 4.1.4.4, 49.3
Building rehabilitation
Change of use requirements 15.7.2.7
Historic buildings, natural light in 15.10.5.13
Modifications 15.5.5.4.3.1, 15.5.5.4.3.2, 15.5.5.4.3.5, 15.5.5.4.3.6
Educational occupancies 49.8
Emergency ..... 5.3.2(11)
Apartment buildings 25.2.9
Assembly occupancies 16.2.9
Business occupancies 28.2.9
Day-care occupancies 18.2.9
Delayed egress locks, use of 11.2.1.6.1.7
Detention and correctional occupancies 21.2.9
Educational occupancies 17.2.9
Health care occupancies 19.2.9, 20.2.9
High-rise buildings ..... 11.9.1.1(3), 33.2.4.1
Hotels and dormitories 24.2.9
Industrial occupancies 29.2.9, A.29.2.9
Limited-access structures 31.3.1.4
Means of egress ..... 11.9, A.11.9.1.1 to A.11.9.2.3

Copyright National Fire Protection Association
Provided by IHS under license with NFPA
No reproduction or networking permitted without license from IHS
Not for Resale

Mercantile occupancies 27.2.9
Open structures 31.5.2.7
Power source 11.10.4, A.11.10.4
Residential board and care occupancies 26.3.2.8
Signs, illumination of 11.10.4, 11.10.8.1, A.11.10.4
Storage occupancies 30.2.9
Parking structures 30.8.2.9
Towers 31.6.9
Underground structures 31.2.2
Water-surrounded structures 31.7.2.4
Means of egress ..... 4.4.3.4, 5.3.2(10), 11.8, 15.7.3.5.1.1, A.11.8.1.1 to A.11.8.2.1
Apartment buildings 25.2.8
Assembly occupancies 16.2.8
Business occupancies 28.2.8
Day-care occupancies 18.2.8, 18.6.2.8
Detention and correctional occupancies 21.2.8
Educational occupancies 17.2.8
Health care occupancies 19.2.8, 20.2.8
Hotels and dormitories 24.2.8
Industrial occupancies 29.2.8
Mercantile occupancies 27.2.8
Open structures 31.5.2.6
Parking structures 30.8.2.8
Reconstruction requirements 15.6.2.1.6
Residential board and care occupancies 26.3.2.7
Storage occupancies 30.2.8, 30.8.2.8
Towers 31.6.8
Performance-based design option 5.3.5.2
Plastic light diffusers for fixtures 48.7.5, A.48.7.5.1, D.2.3.2.17
Plenums, fixtures in 7.2.3.2.15.5, D.2.3.2.15.5, D.2.3.2.17
Recessed fixtures, membrane penetration of 8.8.7.2
Signs, illumination of 11.10.4, 11.10.5, 11.10.8.1, A.11.10.4, A.11.10.5.1, A.11.10.5.2
Temporary 14.4
Light-transmitting plastic ..... 46.5.1(4), 48.7, A.48.7.4.1, A.48.7.5.1; *see also* Light-diffusing systems
Awnings and canopies ..... 32.4.4, 32.4.5.3(3)
Definition 3.3.471.3, 48.2.5.2
Enhanced fire compartments ..... D.2.3.2.13(5), D.3.6
Exterior walls 7.3.6
Glazing 48.7.6.7, 48.7.7
Greenhouses ..... 48.7.8.4.2(3), 48.9
Kiosks ..... 27.4.4.12.1(2)
Roof panels 38.11, 48.7.1.3, 48.7.3.9, 48.7.8
Definition 3.3.447.1, 48.2.4.1, A.3.3.447.1, A.48.2.4.1
Sloped glazing and skylights ..... 46.8.2(1), 48.7.3
Type I and Type II construction ..... 7.2.3.2.13(5), D.2.3.2.13(5)
Wall panels 10.4.4, 37.1.1.1, 48.7.1.3, 48.7.6, A.10.4.4
Definition 3.3.447.2.1, 48.2.4.2, A.3.3.447.2.1, A.48.2.4.2
Limited access spaces 12.3.4
Limited access structures 31.3
Assembly occupancies 16.4.3
Business occupancies 28.4.1
Day-care occupancies 18.4.1
Definition 3.3.601.6
Detention and correctional occupancies ..... 21.4.1, 21.4.4.13, A.21.4.4.13.2(2)
Educational occupancies 17.4.1
Emergency lighting ..... 11.9.1.1(2)
Health care occupancies 19.4.1, 20.4.2
Hotel and dormitory occupancies 24.4.1
Industrial occupancies 29.4.1
Mercantile occupancies 27.4.1
Residential board and care occupancies 26.3.4.1
Storage occupancies 30.4.1
Limited care facilities ..... 19.1.1.4.2(2); *see also* Health care occupancies
Capacity of means of egress ..... 19.2.3.4, 19.2.3.5, A.19.2.3.4(1), A.19.2.3.4(4)
Corridors ..... 19.3.6.1(5)
Definition 3.3.204.6, A.3.3.204.6
Horizontal exits 19.2.2.5.1
Subdivision of building space 19.3.7.4, 19.3.7.5, A.19.3.7.5
Limited-combustible material 7.1.4, D.1.4
Concealed spaces 8.14.3
Definition 3.3.388.9, A.3.3.388.9
Enhanced fire compartments
Type I and Type II construction D.2.3.1, D.2.3.2.1, D.2.3.2.5, D.2.3.2.11.1, D.2.3.2.12
Type III construction D.2.4.1
Type IV construction D.2.5.1
Fire wall terminations, roof assemblies 8.3.3.6.2
Kiosks 27.4.4.12.1
Partitions, health care suites 19.2.5.6.1.4
Plenums 7.2.3.2.15
Ramps ..... 11.2.5.4.1(2)
Roof coverings ..... 15.4.2.9.1(1), 15.4.2.9.3(2)
Smokeproof enclosures ..... 11.2.3.9.2(1)
Type I and Type II construction 7.2.3.1, 7.2.3.2.1, 7.2.3.2.5, 7.2.3.2.11, 7.2.3.2.12, 7.2.3.2.15, D.2.3.1
Type III construction 7.2.4.1, 7.2.4.2.1, D.2.4.1
Type IV construction 7.2.5.1, 7.2.5.5.6, 7.2.5.6.7
Enhanced fire compartments D.2.5.1
Limited state (definition) 3.3.358
Limits ...*see* Ceiling limits; Lower flammable limit (LFL); Permissible exposure limit (PEL)
Limit state (definition) 35.2.17
Linen handling systems, facilities housing 6.4.2.34
Lintels 37.1.2, D.3.7
Liquefied flammable gas (definition) ..... 3.3.270.2.1; *see also* Flammable gas
Liquefied gas facilities 6.4.2.16
Liquefied hydrogen systems, facilities housing 6.4.2.30
Liquefied natural gas (LNG)
Fueling facilities 6.4.2.36
Production facilities 6.4.2.37
Liquefied petroleum gas ..... *see* LP-Gas
Liquids (definition) ..... 3.3.360; *see also* Combustible liquids; Flammable liquids
Liquid storage rooms 34.3.5.8
Definition 3.3.534.6
Listed (definition) 3.2.5, A.3.2.5
Lithium storage, processing, and handling facilities 6.4.2.35
Live load ..... *see* Loads
Living area (definition) 3.3.33.11
Load and resistance factor design 35.1.2.1
Wood 45.4.2, A.45.4.2.1
Load-bearing elements (definition) ..... 3.3.174.2; *see also* Beams; Columns; Floors; Girders; Roof assemblies/roofs; Trusses; Walls
Load effects (definition) 3.3.365, 35.2.18
Load factor ..... *see also* Load and resistance factor design
Definition 3.3.206.2, 35.2.19
Occupant 11.3.1.2
Business occupancies 28.1.6
Mercantile occupancies 27.4.4.6.1, 27.4.4.6.2
Load path 35.1.2.5, 45.6.2
Loads
Additions, imposed by 15.8.4
Bridges, fire department access 7.1.5.2.5.5
Change of use requirements 15.7.2.2, A.15.7.2.2.3
Combinations 35.15
Crane 35.6.8
Dead 5.2.3.1, 35.5, 38.11.2, A.5.2.3.1
Change of use requirements 15.7.2.2.2.2
Definition 3.3.367.1, 35.2.20.1
Glass and glazing 46.10
Grandstands and bleachers ..... 32.7.8.2.4.3(2)
Heliports/helistops ..... 31.9.1(2), 35.14.3
Performance-based design option 5.5.3
Roof 35.1.2.8.8, 35.7.1, A.35.1.2.8.8
Definition 3.3.367, 35.2.20

Copyright National Fire Protection Association
Provided by IHS under license with NFPA
No reproduction or networking permitted without license from IHS
Not for Resale

Design ..... 8.3.3.2.3, 8.4.2, 15.4.3.1, 31.9.1(2), 35.1.2.2, 35.4.2, 35.5 to 35.15, 36.1.1, A.8.3.3.2.3, A.8.4.2, A.35.6.1.2 to A.35.12
Earthquake ..... *see* Earthquake(s)
Factored (definition) ..... 3.3.367.2, 35.2.14; *see also* Load factor
Fire barrier walls 8.4.2, A.8.4.2
Fire walls 8.3.1.1, 8.3.2.2.4, 8.3.3.2.3, A.8.3.1.1, A.8.3.3.2.3
Flood 35.4.2.6.2, 35.12, 39.2.10, 39.5.2, A.35.12
Fuel 5.5.2.6, A.5.5.2.6
Definition 3.3.367.3, A.3.3.367.3
Glass and glazing 46.10
Grandstands and bleachers ..... 32.7.4.1, 32.7.8.2.1, 32.7.8.2.2, 32.7.8.2.4.3(2)
Hydrostatic uplift 35.14.2
Ice 35.13
Live 5.2.3.1, 35.6, A.5.2.3.1, A.35.6.1.2, A.35.6.6
Bridges, fire department access ..... 7.1.5.2.5.5(B)
Canopy, protective A.14.1
Change of use requirements 15.7.2.2.1, 15.7.2.2.2
Concentrated 35.6.3, 35.6.4.2
Definition 3.3.367.4, 35.2.20.2
Floor 35.4.2.1, 35.6.1.2, 35.6.3.1, 35.6.3.3, A.35.6.1.2
Grandstands and bleachers ..... 32.7.8.2.4.3(2)
Handrails, guards, grab rails, and vehicle barriers 35.6.5
Helistops ..... 31.9.1(2)
Historic buildings 15.10.5.12
Impact ..... 35.6.6, 35.14.3(2), A.35.6.6
Interior walls and partitions 35.6.9
Performance-based design option 5.5.3
Reduction 35.6.7
Roof ..... 35.4.2.2, 35.6.1.4.2, 35.7.1, 35.7.2, Table A.35.6.1.2
Truck and bus garages 35.6.4
Uniform 35.6.2, 35.6.4.2, 35.7.1.2.1
Nominal (definition) 3.3.367.5, 35.2.20.3
Occupant ..... 5.4.3.5, A.5.4.3.5; *see also* Means of egress, Capacity of; specific occupancies
Accessibility (definition) 3.3.367.7
Alternating tread devices ..... 11.2.11.2(10)
Capacity of means of egress 11.3.1, A.11.3.1.2
Definition 3.3.367.6
Doors, swing and force to open ..... 11.2.1.4.2(1)
Exit access corridors 11.1.3.1
Multiple occupancy ..... 6.2.1.3(2), A.6.2.1.3(2)
Performance-based design option 5.5.4.1, A.5.5.4.1
Spiral stairways 11.2.2.2.3.3
Story, number of means of egress from 11.4.1.2, 11.4.1.4
Towers ..... 11.2.13.1(2), 11.2.13.2.2
Performance-based design option 5.2.3.1, 5.5.3, 5.5.4.1, A.5.2.3.1, A.5.5.4.1
Piles, axial and lateral loads for 36.5.2
Rain 35.7.3
Roof ..... 35.1.2.8.8, 35.4.2.2, 35.6.1.4.2, 35.7, 38.11.2, A.35.1.2.8.8, Table A.35.6.1.2
Change of use requirements 15.7.2.2.2
Seismic 15.9.3.3.4, 15.9.3.3.5.1, 15.9.3.3.5.2, 35.7.1, 35.10, 40.8, 45.6.2.1, A.35.10.2
Change of use requirements 15.7.2.2.4
Occupancy categories for ..... Table 35.3.1
Performance-based design option 5.2.3.1, 5.5.3, A.5.2.3.1
Snow 35.4.2.3, 35.7.1, 35.8, 38.11.2, 46.10, A.35.8.2
Change of use requirements 15.7.2.2.3, A.15.7.2.2.3
Occupancy categories for ..... Table 35.3.1
Soil lateral ..... 35.11, Table 36.3.4(b)
Special 35.4.2.6.1
Wind ..... 15.7.2.2.3, 15.9.3.3.4, 35.4.2.4, 35.7.1, 35.9, 38.11.2, 45.6.2.1, 46.10, A.15.7.2.2.3, A.35.9.1.4 to A.35.9.4.2
Occupancy categories ..... Table 35.3.1
Load tests
In-situ 35.1.2.6
Piles, axial and lateral loads for 36.5.2.1, 36.5.2.2
Preconstruction 35.1.2.7
Subsoil 36.3.2
Lobbies ..... *see also* Elevator lobbies
Apartment buildings ..... 25.3.3.2(2)
Assembly occupancies 16.1.6.1, 16.2.3.3.5, 16.3.3.2, 16.3.6
Day-care occupancies ..... 18.3.3.2(1), 18.6.3.3.2.1
Definition 3.3.368
Exit access through 11.5.1.7
Health care occupancies ..... 19.3.6.1(4)
Hotels and dormitories ..... 24.2.7.2, 24.3.3.2(2), A.24.2.7.2
Interior finish ..... *see* Interior finish
Parking structures ..... 7.4.3.6.5(4)
Residential board and care occupancies ..... 26.3.3.3.2(2)
Location of buildings 7.1.3
Locker rooms 12.22
Apartment buildings ..... Table 25.3.2.2
Detention and correctional occupancies ..... Table 21.4.4.7
Detention and correctional residential housing area ..... Table 21.3.2.1
Hotels and dormitories ..... Table 24.3.2.3
Lockers 12.25.2
Locks and latches ..... 11.1.9, 11.2.1.5, 11.2.1.6, 11.9.1.1(4), 15.6.2.1.4.11, 15.7.3.4.4(1), A.11.2.1.5.4 to A.11.2.1.5.12, A.11.2.1.6.1.6, A.11.2.1.6.2
Apartment buildings 25.2.2.2.2, 25.3.6.3, A.25.2.2.2.2.1
Assembly occupancies ..... 16.2.2.2.3 to 16.2.2.2.6
Business occupancies 28.2.2.2.2, 28.2.2.2.4, A.28.2.2.2.2
Day-care occupancies ..... 18.2.2.2.4 to 18.2.2.2.7, A.18.2.2.2.6
Delayed-egress ..... 11.2.1.6.1, 11.9.1.1(4), A.11.2.1.6.1.6
Airport loading walkways ..... 16.4.10.2(2), A.16.4.10.2(2)
Apartment buildings 25.2.2.2.2.2
Assembly occupancies ..... 16.2.2.2.3(1), 16.2.2.2.5
Business occupancies 28.2.2.2.4
Health care occupancies ..... 19.2.2.2.4(2), 20.2.2.2.1, A.19.2.2.2.4(2)
Hotels and dormitories 24.2.2.2.2.2
Industrial occupancies 29.2.2.2.2
Lodging or rooming houses 23.2.3.6.2
Mercantile occupancies 27.2.2.2.4
Residential board and care occupancies ..... 26.2.2.4.6.1, 26.3.2.1.2(4)
Storage occupancies 30.2.2.2.2
Detention and correctional occupancies ..... 21.1.2.2.1, 21.1.2.2.2, 21.1.3.1.3 to 21.1.3.1.5, 21.1.3.2, 21.2.11.2, 21.2.11.3, 21.2.11.6 to 21.2.11.12, 21.4.5.2.2, A.21.1.2.2.2, A.21.1.3.2, A.21.2.11.7
Educational occupancies ..... 17.2.2.2.2 to 17.2.2.2.5
Health care occupancies ..... 19.1.1.1.6, 19.1.2.6, 19.2.2.2.2 to 19.2.2.2.6, 19.3.6.3.2, 19.4.3.6.2(3), A.19.2.2.2.4(2)
Ambulatory health care occupancies ..... 20.1.2.5, 20.2.2.2.1 to 20.2.2.2.3, 20.3.6.2(1), 20.3.7.7(3)
Hotels and dormitories 24.2.2.2.2, 24.3.6.3
Industrial occupancies 29.2.2.2.2
Lodging or rooming houses 23.2.3.3, 23.2.3.4, 23.2.3.6, 23.2.3.7, 23.3.5.5, A.23.2.3.6.1
Mercantile occupancies 27.2.2.2.2, 27.2.2.2.4, A.27.2.2.2.2
Occupied buildings A.11.2.1.1.3
One- and two-family dwellings 22.2.4.4, 22.2.4.5, 22.2.4.7, 22.2.4.10, A.22.2.4.7
Remote power-unlocking capability ..... 15.6.2.1.4.11, 15.7.3.4.4(1), 19.2.2.2.5, 21.1.3.1.3, 21.1.3.1.4, 21.1.3.2, 21.2.11.7 to 21.2.11.12, 21.4.5.1.4(5), 55.2.5.2(4), A.21.1.3.2, A.21.2.11.7
Residential board and care occupancies ..... 26.2.2.4.4 to 26.2.2.4.8, 26.2.3.6.5(1), 26.3.2.1.2(3) to 26.3.2.1.2(7), 26.3.3.7.20
Self-latching doors ..... 11.2.1.9.2(5)
Storage occupancies 30.2.2.2.2
Parking structures 30.8.2.2.2.2
Lockups 21.1.1.6, 21.4.5, A.21.1.1.6
Assembly occupancies 16.2.5.6.10, A.16.2.5.6.10

Copyright National Fire Protection Association
Provided by IHS under license with NFPA
No reproduction or networking permitted without license from IHS
Not for Resale

Business occupancies 28.2.11.2
Day-care occupancies 18.2.11.2
Definition 3.3.369
Educational occupancies 17.2.11.2
Health care occupancies 20.2.11.2
Hotel and dormitory occupancies 24.2.11.2
Industrial occupancies 29.2.11.2
Lodging or rooming houses ..... Chap. 23
Accessibility ..... 12.6.2.3.1 Ex. 5, 12.6.5.3, 12.45.3
Platform (wheelchair) lifts 12.6.7.6
Visible alarms 12.15.4
Building services 23.5
Classification of occupancy 23.1.3
Definition 3.3.370, 6.1.8.1.2
Energy efficiency ..... 51.2.1(6)
Flood-resistant construction ..... 39.11.1.2.2(4)
General requirements ..... 23.1, 34.1.3.2, Table 34.1.3.2(h), Table 34.3.2.3, A.23.1.1.1
Means of escape 23.2, A.23.2.3.6.1
Multiple occupancy 23.1.2
Occupant load 23.1.6
Protection ... 22.3, 23.3, 55.2.3.5.2, A.22.3.5, A.23.3.2 to A.23.3.6.2
Rehabilitation of 23.1.1.3
Separated occupancies, fire-resistant rated separations for ..... Table 6.2.4.1(a), Table 6.2.4.1(b)
Separation of sleeping rooms 23.3.5
Long-term care facilities (accessibility) ..... 12.23, 12.45.2; *see also* Health care occupancies
Lot (definition) 3.3.371
Loudspeakers
In plenums 7.2.3.2.15.5, D.2.3.2.15.5
Public address systems .....*see* Alarms and alarm systems, Voice communication/public address systems
Louvers .....*see* Glass, Louvered windows or jalousies; Transoms
Lower flammable limit (LFL) (definition) 3.3.354.2, A.3.3.354.2
Lowest floor (flood resistance) ..... 35.4.2.6.2(3), 35.4.2.6.2(4), 39.7, 39.12.3.1.3, 39.12.3.2.3, 39.14.2
Definition 3.3.254.1, 39.2.15
Inspection ..... 1.7.6.6.3.4(C), A.1.7.6.6.3.4(C)
Low explosive material .....*see* Explosive material
Low hazard contents 6.3.2.2, A.6.3.2.2
Atriums ..... 8.12.3(3)
Doors for occupancies with 11.2.1.4.1.6
Automatic closing doors 11.2.1.8.2
Delayed-egress locks 11.2.1.6.1, A.11.2.1.6.1.6
Height and area requirements for occupancies with .... Table 7.4.1
Industrial processes requiring unusual heights 7.4.3.6.3, A.7.4.3.6.3
Unlimited area buildings 7.6.3.1
Industrial occupancies ..... 29.1.3.1.1(1), 29.1.3.1.2(1), 29.2.4.1.2
Light-transmitting panels, use ..... 48.7.8.4.2(2)
Occupancy classification, change of ..... Table 15.7.3.5.1.1
Exterior walls, exposure of ..... Table 15.7.3.9.1.1
Height and area requirements ..... Table 15.7.3.8.1.1
Separated occupancies, fire-resistant rated separations for ..... Table 6.2.4.1(b)
Storage occupancies ..... 30.2.4.1, 30.3.4.1(1), Table 34.3.2.3
LP fuel .....*see* Fuel gas
LP-Gas .....*see also* Fuel gas
Definition 3.3.270.4
Distribution facilities 6.4.2.38
Distribution piping ..... 53.1(2)
Parking structures, storage in ..... 30.8.3.2.1(2)
Tents 32.3.6.5
Lumber .....*see also* Timber; Wood
End-jointed 45.5.4
Fire-retardant-treated 45.5.15.2.2.2
Foundation walls 45.6.9.6.16
Grade
Definition 3.3.377, 45.2.4
Identification 45.5.2
Nominal size 45.5.3
Definition 3.3.412, 45.2.5
Structural composite 45.5.12

-M-

Machinery spaces 12.3.5
Magnesium storage, handling, and processing facilities 6.4.2.39
Mail boxes (accessibility) 12.28.2
Mains, private fire service 55.9
Maintenance of buildings and property 1.7.5.2
Elevator evacuation system 11.2.13.10
Means of egress 11.1.10.1, A.11.1.10.1
Maintenance of equipment, devices, systems and features 4.4.9, 4.5.8, 5.1.6
Mall
Definition 3.3.378
Escalators in ..... 8.12.5.2(1)
Exits to 27.2.4
Kiosks 27.4.4.12
Mall buildings ..... 27.1.1.3, 27.1.3.2.4, 27.4.4, A.27.4.4.2.1 to A.27.4.4.8
Accessibility ..... 12.6.2.3.1 Ex. 1
Building services 27.4.4.5.9.2, A.27.4.4.5.9.2
Change of use ..... 15.7.2.1.1(1)
Definition 3.3.65.12, 27.4.4.2.2, 27.4.4.2.5, A.3.3.65.12, A.27.4.4.2.2
Enhanced fire compartments D.7.1
Exit passageways ..... 11.1.3.2.1.5, 11.2.6.5(2), 27.2.2.7.2, A.11.1.3.2.1.5, A.27.2.2.7.2
General requirements 27.4.4.3, A.27.4.4.3.5.2
Height and area requirements 7.4.1.3.1
Means of egress ..... 27.4.4.5, A.27.4.4.5.2.2(3) to A.27.4.4.5.9.2
Multiple occupancies in 16.1.2.3, 27.4.4.4
Notification 55.2.3.6.4
Occupant load .... Fig. 11.3.1.3, 27.4.4.5.9.1, 27.4.4.6.1, 27.4.4.6.2
Plastic interior signs 48.8.3, 48.8.4
Protection 1.7.6.3.1.9, 27.4.4.7
Separated occupancies, fire-resistant rated separations for ..... Table 6.2.4.1(b)
Manufactured home parks or subdivisions (flood resistance)
Definition 3.3.382, 39.2.17, C.5.3
Flood resistance C.6
Manufactured homes
Definition 3.3.320.2
Energy efficiency 51.4
Flood resistance 39.14, C.1.5.1, C.2.1
Definition 3.3.320.2.1, 39.2.16, C.5.2
Modifications, electrical systems ..... 15.5.5.5(8)
Maps ..*see* Flood boundary and floodway map (FBFM); Flood hazard boundary map (FHBM); Flood hazard map; Flood insurance rate map (FIRM)
Marinas and boatyards 6.4.2.40
Marine terminals 6.4.2.41
Definition 3.3.618.1
Marine vessels 31.4.2
Marking .....*see* Signs (marking)
Marquees ..... 32.4.4, 32.5, Table A.35.6.1.2
Definition 3.3.385
Masonry ..... Chap. 43, 47.4.1.4
Bonded hollow wall (definition) 3.3.644.9
Chimneys and fireplaces 32.11, 43.9
Construction 43.7
Construction documents 43.4
Control joints A.8.9
Definition 3.3.386
Deflection limits, structural members 35.1.2.8.4
Exterior walls ..... 37.3.2(4), 37.3.4
Fire resistance rating 8.2.3.2.2
Floors 7.2.5.6.4
Foundation walls
Pier and curtain wall 36.6.4
Thickness of ..... 36.6.2.1 to 36.6.2.3, 36.6.2.6, 36.6.2.7

Copyright National Fire Protection Association
Provided by IHS under license with NFPA
No reproduction or networking permitted without license from IHS
Not for Resale

Heaters 32.12
Inspection ..... 1.7.6.6.3.4(G)
Materials 43.6
Nominal dimension (definition) 3.3.411.1, A.3.3.411.1
Quality assurance programs ..... 40.2.4(4), 40.3.9, 43.5
Radon protection 49.2.5.3.3.5
Retaining walls 36.9.4
Roof coverings ..... 38.2.1.2(1)
Second-hand units 43.6.1
Seismic requirements 43.8
Solid masonry units (definition) 3.3.570
Surface-bonding mortar 43.6.2
Swimming pools 32.8.3.2
Thermal barriers ..... 48.3.3.4(1)
Wood used with ..... 45.6.9.6.4 to 45.6.9.6.6, 45.6.9.6.12, 45.6.10
Masts, radio and television 32.14.2
Material-handling systems
Fire walls 8.3.2.8.5, 8.3.3.10.4, A.8.3.2.8.5, A.8.3.3.10.4
Materials ..... *see* specific materials
Materials and methods requirements 7.2.1.3
Definition 3.3.389, A.3.3.389
Maximum considered earthquake ground motion 35.10.3
Definition 3.3.390, 35.2.20
Means of egress ..... 4.4.3, Chap. 11; *see also* specific occupancies
Accessible ..... 11.4.1.3, 11.4.1.5, 11.4.1.6, 11.5.4, 12.7, A.11.5.4.1; *see also* Exit access
Break out opening 12.45.1
Definition 3.3.391.1
Smokeproof enclosures 11.2.3.6
Arrangement of ..... 11.5, A.11.5.1.1.1 to A.11.5.4.1
Apartment buildings 25.2.5
Assembly occupancies ..... 16.2.5, A.16.2.5.4.2 to A.16.2.5.8.3
Business occupancies 28.2.5
Day-care occupancies 18.2.5, 18.6.2.5
Detention and correctional occupancies 21.2.5
Educational occupancies 17.2.5, A.17.2.5.7
Health care occupancies ..... 19.2.5, 20.2.5, A.19.2.5.3 to A.19.2.5.6.3.2(C)
Hotels and dormitories 24.2.5
Industrial occupancies 29.2.5, A.29.2.5.2.1, A.29.2.5.2.2
Mercantile occupancies 27.2.5, A.27.2.5.7
Piers 31.8.2
Residential board and care occupancies 26.3.2.4
Storage occupancies 30.2.5, 30.8.2.5
Atriums ..... 8.12.3(2)
Awareness of egress system 4.4.3.3
Capacity of ..... 5.3.2(8), 11.2.1.2.1, 11.3, A.11.2.1.2.1, A.11.3.1.2, A.11.3.4.1.1; *see also* subhead, Width of
Apartment buildings 25.2.3
Assembly occupancies 16.2.3, A.16.2.3.2
Business occupancies 28.2.3, A.28.2.3.2
Day-care occupancies 18.2.3
Detention and correctional occupancies 21.2.3, 21.4.4.6.3
Educational occupancies 17.2.3
Health care occupancies ..... 19.2.3, 19.4.3.2, 20.2.3, A.19.2.3.3 to A.19.2.3.4(4)
High hazard contents areas 34.3.2.4.2
Historic buildings 15.10.4.4
Hotels and dormitories 24.2.3, A.24.2.3.3
Industrial occupancies 29.2.3
Malls 27.4.4.6
Mercantile occupancies 27.2.3, 27.4.4.6
Occupancy classification, change of ..... 15.7.3.4.1(1), 15.7.3.5.1.1, 15.7.3.5.1.4
Open structures 31.5.2.2
Reconstruction 15.6.2.1.3, A.15.6.2.1.3
Residential board and care occupancies 26.3.2.2
Storage occupancies 30.2.3
Towers 31.6.4
Water-surrounded structures 31.7.2.2
Change of level of ..... 5.3.2(1), 11.1.7, A.11.1.7.2
Communicating space, vertical openings ..... 8.12.2(6) to (8), A.8.12.2(7)
Components ..... 11.2, A.11.2.1.1.3 to A.11.2.13.9; *see also* specific components, e.g. Doors
Apartment buildings 25.2.2, A.25.2.2.2.2.1, A.25.2.2.10.1
Assembly occupancies ..... 16.2.2, A.16.2.2.3.1(1)
Business occupancies 28.2.2, A.28.2.2.2.2
Day-care occupancies 18.2.2, A.18.2.2.2.6
Detention and correctional occupancies 21.2.2
Educational occupancies 17.2.2
Health care occupancies 19.2.2, 20.2.2, A.19.2.2
Hotels and dormitories 24.2.2, A.24.2.2.12.1
Industrial occupancies 29.2.2, A.29.2.2.5.2
Mercantile occupancies 27.2.2, A.27.2.2.2.2, A.27.2.2.7.2
Open structures 31.5.2.1
Residential board and care occupancies 26.3.2.1
Storage occupancies 30.2.2, 30.8.2.2, A.30.2.2.5.2
Towers 31.6.3
Convenience openings as ..... 8.12.4.2(4), A.8.12.4.2(4)
Definition 3.3.391, A.3.3.391
Detached buildings ..... 34.3.5.5(5)
Detention and correctional occupancies 21.4.5.1.4, 21.4.5.2.2
Emergency lighting ..... 11.9, A.11.9.1.1 to A.11.9.2.3
Exit discharge ..... *see* Exit discharge
Headroom 11.1.5, A.11.1.5
High hazard contents areas 34.3.2.4
Historic buildings ..... 15.10.4.4 to 15.10.4.11, 15.10.5.5, 15.10.5.10 to 15.9.5.12
Illumination of ..... *see* Lighting
Impediments to egress ..... 5.3.2(9), 11.1.9, 11.5.2, A.11.5.2.1, A.11.5.2.2; *see also* Locks and latches
Detention and correctional occupancies ..... 21.1.3.1.3 to 21.1.3.1.5
Marking of ..... *see* Signs
Mixed occupancies 6.2.3.2
Number of 4.4.3.1, 11.4, 27.4.4.5.5
Apartment buildings 25.2.4
Assembly occupancies 16.2.4, A.16.2.4
Business occupancies 28.2.4
Day-care occupancies 18.2.4
Detention and correctional occupancies 21.2.4, A.21.2.4.2
Educational occupancies 17.2.4
Health care occupancies ..... 19.2.4, 19.2.5.4, 19.2.5.6.2.2, 19.2.5.6.3.2, 20.2.4, A.19.2.4.3, A.19.2.5.6.2.2(B), A.19.2.5.6.3.2(B), A.19.2.5.6.3.2(C)
High hazard contents areas 34.3.2.4.3
Hotels and dormitories 24.2.4
Industrial occupancies 29.2.4
Mercantile occupancies 27.2.4
Open structures 31.5.2.3
Piers 31.8.1
Reconstruction requirements 15.6.2.1.2
Residential board and care occupancies 26.3.2.3
Storage occupancies 30.2.4, 30.7.2, 30.8.2.4
Towers 31.6.5
Occupancy classification, change of 15.7.3.5.1
Parking structures, occupancy above 7.4.3.6.8.4, D.6.9.4
Performance-based design option 5.2.4.4, 5.3.2
Point of convergence 11.3.1.5
Reconstruction requirements 15.6.2.1, A.15.6.2.1.3
Refrigeration machinery room 50.3.1
Reliability 11.1.10, A.11.1.10.1
Semiconductor fabrication areas 34.3.7.2.1.6, 34.3.7.2.2, 34.3.7.2.3
Separation of ..... 11.1.3, A.11.1.3.2.1.5 to A.11.1.3.2.3
Signs ..... *see* Signs (marking)
Single means of egress, buildings having ..... 15.6.2.1.2.2, 15.6.2.1.4.1(B)
Travel distance to exits, measurement of ..... *see* Exits
Unobstructed egress 4.4.3.2
Walking surfaces 11.1.6, A.11.1.6.4

Copyright National Fire Protection Association
Provided by IHS under license with NFPA
No reproduction or networking permitted without license from IHS
Not for Resale

Width of ..... 11.3.2, 11.3.4, 15.10.4.4, 15.10.5.5, A.11.3.4.1.1; *see also* subhead, Capacity of
Assembly occupancies ..... 16.1.6.1, 16.2.3.2, 16.2.3.5, 16.2.5.4.4 to 16.2.5.4.6, 16.2.5.5, 16.2.5.6.4, 16.2.5.7, 16.2.5.8.2, 16.2.5.8.3, 16.4.2.3 to 16.4.2.5, 16.4.5.8, A.16.2.3.2, A.16.2.5.4.4, A.16.2.5.5, A.16.2.5.6.4, A.16.2.5.7, A.16.2.5.8.2, A.16.2.5.8.3
Clear width 11.2.1.2.2, 11.2.1.2.3, A.11.2.1.2.3
Detention and correctional occupancies ... 21.2.11.4, A.21.2.11.4
Educational occupancies 17.2.3.2
Health care occupancies ..... 19.2.2.5.4, 19.2.2.5.5, 19.2.3.3 to 19.2.3.5, 20.2.3.2, A.19.2.3.3 to A.19.2.3.4(4)
Mercantile occupancies 27.2.5.4, 27.2.5.5
Means of escape 4.5.5.2, A.11.1.1
Apartment buildings 25.2.1.2, 25.2.2.8, 25.2.2.9
Assembly occupancies 16.2.4.6
Business occupancies 28.2.2.10, 28.2.2.11
Day-care homes 18.6.2
Definition 3.3.392
Hotels and dormitories 24.2.1.2, 24.2.2.10, 24.2.2.11
Lodging or rooming houses 23.2, A.23.2.3.6.1
Mercantile occupancies 27.2.2.10, 27.2.2.11
Occupancy classification, change of 15.7.3.5.1.1
One- and two-family dwellings 22.2, A.22.2
Open structures 31.5.2.1
Residential board and care occupancies ..... 26.1.2.2, 26.1.3, 26.2.2, 26.3.2.1.8, 26.3.2.1.9, A.26.2.2.2(3), A.26.2.2.5.2
Storage occupancies 30.2.2.8, 30.2.2.9, 30.7.2.2, 30.7.3
Towers 31.6.3.1, 31.6.11.1.1
Measurement, units of 1.6
Mechanical equipment rooms ..... 11.12; *see also* Elevator machine rooms/machinery spaces
Mechanical systems ..... 7.1.2, Chap. 50; *see also* Ventilation
Change of use requirements 15.7.2.5
Code, compliance to 15.1.2.4, 15.1.3.1.1, 15.3.1.3, 15.5.1.5, A.15.1.2.4.2, A.15.1.3.1.1
Concealed spaces ..... 8.14.3(3)
Flood-resistant construction 39.10, 50.2, A.39.10
High-rise buildings 33.2.4.2.4
Inspection ..... 1.7.6.6.3.4(K)
Membrane structures 32.2.1.5
Modifications 15.5.1.3.2, 15.5.1.3.4, 15.5.1.3.5, 15.5.1.5, 15.5.6
Penetrations for .....*see* Penetrations
Plans 1.7.6.3.1.4
Renovations 15.4.4.1.2, 15.4.4.2.2, 15.4.4.3.2
Medical gas 19.3.2.4
Membranes
Ceilings as protective membranes 8.6.1.2, 8.6.1.3
Definition 3.3.393, 32.1.3.5, A.3.3.393
Flame resistance 32.2.2.4
Flame spread 32.2.2.3
Penetration .....*see* Penetrations
Tests 32.2.2.1
Use of 32.2.2.2
Membrane structures ..... 32.2, 32.3.2, A.32.2.3.2 to A.32.2.5
Definition 3.3.601.7, 32.1.3.9.3
Grandstands in ..... 16.4.8.3.5, 32.7.5.3(2)
Mixed construction 32.2.1.7
Multiple occupancies, separation of 32.2.1.6
Temporary ..... 32.2.1.1(2), 32.2.5, 32.3.5.1, 32.3.6.5, 32.3.6.7, A.32.2.5.3
Mercantile occupancies ..... Chap. 27; *see also* Bulk merchandising retail buildings; Mall buildings
Accessibility ..... 12.6.2.3.1 Ex. 1
Sales and service counters 12.27
Alcoholic beverages, medicines, foodstuffs, and cosmetics 34.1.3.3.2
Building services ..... 27.4.4.5.9.2, 27.5, 49.2.2.1(7), A.27.4.4.5.9.2
Definition 3.3.424.8, 6.1.10.1, A.3.3.424.8, A.6.1.10.1
Energy efficiency ..... 51.2.1(9)
Flood-resistant construction ..... 39.11.1.2.1(5)
General requirements ..... 27.1, 34.1.3.3, Table 34.3.2.3, A.27.1.2.2.2(4)
Height and area requirements ..... Table 7.4.1, Table 15.7.3.8.1.1
Live loads ..... Table A.35.6.1.2
Means of egress ..... 27.2, 27.4.4.5, 27.4.5.2, A.27.2.2.2.2 to A.27.2.7.2, A.27.4.4.5.2.2(3) to A.27.4.4.5.9.2
Means of escape 27.2.2.10, 27.2.2.11
Multiple occupancy ..... 6.2.1.3(1), 7.4.3.6.5(4), 16.1.2.3, 27.1.2, 27.3.5.1(4), 27.4.4.4, A.27.1.2.2.2(4)
Occupancy classification 27.1.1.3, 27.1.3, 27.2.3.2, 27.2.4, 27.2.5.4.3, 27.2.5.8, 27.3.1, 27.3.4.1, 27.3.5.2
Change of ..... Table 15.7.3.5.1.1, Table 15.7.3.8.1.1, Table 15.7.3.9.1.1
Occupant load ..... Table 11.3.1.2, 27.1.6, 27.2.2.7.2, 27.2.3.2, 27.4.4.5.9.1, A.27.2.2.7.2
Open-air operations 27.4.3
Definition 3.3.437
Protection ..... 27.3, A.27.3.2.1 to A.27.3.6.1
Rehabilitation of ..... Table 15.7.3.5.1.1, Table 15.7.3.8.1.1, Table 15.7.3.9.1.1, 27.1.1.2
Separated occupancies, fire-resistant rated separations for ..... Table 6.2.4.1(b)
Special provisions ..... 27.4, A.27.4.4.2.1 to A.27.4.4.8
Unlimited area buildings 7.6.3.2.1, 7.6.3.4
Metal .....*see also* Aluminum; Steel
Composite panel walls ..... D.2.3.2.13(2), D.3.11
Definition 3.3.645.10
Nominal dimension (definition) 3.3.411.2
Roof panels ..... 38.9.7, A.38.9.7.5 to A.38.9.7.8.2
Definition 38.1.1.6
Roof shingles 38.9.8, A.38.9.8.5
Definition 38.1.1.7
Metal composite material (MCM) 37.4
Definition 3.3.388.10
Kiosks ..... 27.4.4.12.1(4)
Type I and Type II construction ..... 7.2.3.2.13(2)
Mezzanines 8.13
Accessibility ..... 12.6.2.4 Ex. 3, 12.6.2.5 Ex. 1
Definition 3.3.399.1
Assembly occupancies ..... 16.2.4.3 to 16.2.4.5, 16.3.1(1), 16.4.2.3
Business occupancies 28.2.4.5
Communicating spaces, exit access within ..... A.8.12.2(7)
Definition 3.3.399
Educational occupancies ..... 17.2.4(2)
Egress capacity from 11.3.1.6
Enhanced fire compartments D.2.3.2.3, D.2.3.2.4
Floors 7.2.3.2.3, 7.2.3.2.4
Hotels and dormitories 24.2.7.2, A.24.2.7.2
Industrial occupancies ..... 29.3.5.1(3), 29.6.3
Marking 11.2.2.6.6
Mercantile occupancies ..... 27.1.3.2.3, 27.3.1(2)
Number of means of egress from 11.4.1.1
Reconstruction, means of egress 15.6.2.1.2.1
Storage occupancies ..... 30.3.5.1.1(3), 30.6.3
Story, counting as 7.4.3.3.2
Miniature golf facilities (accessibility) 12.6.2.16, 12.39, 12.45.13
Mini-storage buildings 30.3.5.3
Definition 3.3.65.13, A.3.3.65.13
Mirrors 12.13.3.5
Mission continuity 4.1.6.3, 5.2.9, A.4.1.6.3.1, A.4.1.6.3.2
Mixed occupancies .... 6.2.1.1(2), 6.2.1.2, 6.2.3, 16.1.2.1, 16.3.4.1(1)
Apartment buildings 25.1.2.1
Day-care occupancies 18.1.2.1
Definition 3.3.424.9, 6.2.2.2
Detention and correctional occupancies 21.1.2.1
Educational occupancies 17.1.2.1
Enhanced fire compartments D.4.2.5.1.2
Height and area requirements 7.4.1.1.1
High-rise buildings 16.4.4
Hotels and dormitories 24.1.3.1
Industrial occupancies 29.1.2

Copyright National Fire Protection Association
Provided by IHS under license with NFPA
No reproduction or networking permitted without license from IHS
Not for Resale

Mall buildings 27.4.4.4
Mercantile occupancies ..... 27.1.2.1, 27.3.5.1(4), 27.4.4.4
Occupancy classification, change of 15.7.3.8.1.4
Residential board and care occupancies 26.1.2.1
Storage occupancies 30.1.2
Parking structures 30.8.1.2
Stories, allowable area ratio for 7.6.2.3.2
Mobile homes .....*see* Manufactured homes
Mobility impairment .....*see* Severe mobility impairment
Model rocket motor manufacturing facilities 6.4.2.42
Modifications ..... 1.3.4(2), 4.5.1.2, 15.1.1.1, 15.1.1.2, 15.1.1.4, 15.1.1.6.3, 15.5; *see also* Alterations (alter); Renovations
Accessibility requirements 15.5.4
Building permit process 15.1.3.2
Compliance to codes ..... 15.1.2, A.15.1.2.2.2 to A.15.1.2.4.2
Definition 3.3.402, 15.2.2.3
Electrical requirements 15.5.5
Extensive 15.5.1.3
Historic buildings .....*see* Historic buildings
Mechanical requirements 15.5.6
Nonstructural requirements 15.5.2
Structural requirements 15.1.5, 15.5.3
Moist curing 47.4.3.2.8
Definition 3.3.403, 47.1.5.7
Moisture, uncontrolled .....*see* Uncontrolled moisture
Motels .....*see* Hotels
Motion picture and television production facilities .....*see* Production studios
Motion picture film storage .....*see* Cellulose nitrate motion picture film storage
Motion picture projection rooms ..... 15.7.2.1.1(6), 15.7.2.4.1(11), 16.4.6
Motion picture theaters ..... 7.6.3.8; *see also* Theaters
Enhanced fire compartments D.4.3.3.8
Motor freight terminals ..... A.3.3.425.14(4)
Definition 3.3.618.2, A.3.3.618.2
Motor fuel dispensing facilities ..... 6.4.2.45, 15.7.2.4.1(4), 32.4.5
Moved buildings and structures
Application of code to ..... 1.3.3, 1.3.4(3)
Historic buildings .....*see* Historic buildings
Inspection prior to permit 1.7.6.6.1.2
Permits for 1.7.6.2.4, 1.7.6.6.1.2
Special amusement buildings, movable 16.4.7.3
Moving walks ..... 8.12.5.2, 8.12.5.3, 11.2.7, 11.7.4, 15.5.5.5(4), 54.2
Multilevel play structures 16.4.7.1, A.16.4.7.1
Definition 3.3.601.8
Multiple occupancies ..... 6.2, A.6.2.1.3; *see also* specific occupancies
Definition 3.3.424.10, 6.2.2.1, A.3.3.424.10
Flood-resistant construction ..... 39.7(2), 39.11.1.2.3
Height and area requirements 7.4, A.7.4.1.3.7, A.7.4.3.6.3
High-rise buildings 6.2.3.4, 33.1.2
Mall buildings 16.1.2.3, 27.4.4.4
Membrane structures 32.2.1.6
Occupancy category 35.3.2
Occupancy classification, change of 15.7.3.8.1.4
Parking structures 30.8.1.2
Reconstruction requirements 15.6.2.5.3
Multiple station alarm devices .....*see* Alarms and alarm systems
Multipurpose assembly occupancies .....*see* Assembly occupancies
Multi-story buildings, access to .... 12.6.2.3, 12.6.2.4 Ex. 3, 12.33.2.2.3
Multitenant buildings .....*see* Tenant spaces

-N-

Nails 45.5.17, 45.6.8.2, 45.6.8.3
Natural gas ....*see also* Compressed gas; Liquefied natural gas (LNG)
In parking structures ..... 30.8.3.2.1(3)
Net floor area .....*see* Floor area
Nominal dimension
Masonry (definition) 3.3.410.1, A.3.3.410.1
Metal (definition) 3.3.410.2
Nominal loads (definition) 3.3.368.5, 35.2.20.3
Nominal size (lumber) .....*see* Lumber
Nonbearing walls .....*see* Walls
Noncombustible material ..... 7.1.4, D.1.4; *see also* Limited-combustible material; Low hazard contents
Awnings and canopies ..... 32.4.2.1(1)
Concealed spaces 8.14.3
Definition 3.3.388.11
Enhanced fire compartments
Type I and Type II construction D.2.3.1, D.2.3.2.1, D.2.3.2.5, D.2.3.2.11.1, D.2.3.2.12
Type III construction D.2.4.1
Type IV construction D.2.5.1
Fire wall terminations, roof assemblies 8.3.3.6.2
Kiosks 27.4.4.12.1
Parking structure floors 30.8.1.6.4
Partitions, health care suites 19.2.5.6.1.4
Plenums 7.2.3.2.15
Ramps ..... 11.2.5.4.1(2)
Roof coverings ..... 15.4.2.9.1(1), 15.4.2.9.3(2), 22.4.4(1)
Screens 46.8.3.3
Smokeproof enclosures ..... 11.2.3.9.2(1)
Storage A.6.3.2.2
Type I and Type II construction 7.2.3.1, 7.2.3.2.1, 7.2.3.2.5, 7.2.3.2.11, 7.2.3.2.12, 7.2.3.2.15, D.2.3.1, D.2.3.2.1, D.2.3.2.5, D.2.3.2.11.1, D.2.3.2.12
Type III construction 7.2.4.1, 7.2.4.2.1, D.2.4.1
Type IV construction 7.2.5.1, 7.2.5.5.6, 7.2.5.6.7, D.2.5.1
Nonconforming (definition) 3.3.416
Normal temperature and pressure (NTP) (definition) 3.3.420
Notice of violation .....*see* Written notice
Notification ..... 4.1.3.3.2.4, 4.4.4, 55.2.1.3, 55.2.3, A.4.4.4, A.55.2.3.6.2; *see also* Emergency forces notification
To affected zones only 55.2.3.6.2, A.55.2.3.6.2
Apartment buildings 25.3.4.3
Assembly occupancies 16.3.4.3
Audible and visible signals 5.5.2.3.8, 55.2.3.5, 55.2.3.7
Business occupancies 28.3.4.3
Day-care occupancies 18.3.4.3, 18.3.4.4
Detention and correctional occupancies 21.3.4.3, 21.4.5.2.4, A.21.3.4.3.1.2
Educational occupancies 17.3.4.3, A.17.3.4.3.1.1
General evacuation signal 55.2.3.6, A.55.2.3.6.2
Health care occupancies 19.3.4.3, A.19.3.4.3.1.2
Ambulatory health care occupancies 20.3.4.3
Hotels and dormitories 12.45.3.3.2, 24.3.4.3, A.24.3.4.3
Industrial occupancies 29.3.4.3
Lodging or rooming houses 23.3.4.3, A.23.3.4.3.1
Mercantile occupancies 27.3.4.3
Bulk merchandising retail buildings 27.4.5.4.3
Malls 27.4.4.10.3
Occupants incapable of evacuating 55.2.3.6.3
Performance-based design option 5.2.4.3, A.5.2.3.4
Residential board and care occupancies ..... 26.2.3.4.2, 26.3.3.4.4 to 26.3.3.4.6, A.26.3.3.4.6
Semiconductor fabrication facilities 34.3.7.3.6.5
Smokeproof enclosure systems, actuation of ..... 11.2.3.10.2(2)
Storage occupancies 30.3.4.3
Parking structures 30.8.3.4.3
NTP .....*see* Normal temperature and pressure (NTP)
Nuclear power plants 6.4.2.46
Number of stories .....*see* Story
Nursing homes ..... A.6.1.5.1(3); *see also* Health care occupancies
Capacity of means of egress 19.2.3.3, 19.2.3.5, A.19.2.3.3
Change of occupancy classification 19.1.1.4.2
Definition 3.3.320.3
Horizontal exits 19.2.2.5.1
Smoke detection systems 19.3.4.5.3, A.19.3.4.5.3
Subdivision of building space 19.3.7.4, 19.3.7.5, A.19.3.7.5

Copyright National Fire Protection Association
Provided by IHS under license with NFPA
No reproduction or networking permitted without license from IHS
Not for Resale

-O-

Objectives 4.1, A.4.1
Definition 3.3.423, A.3.3.423
Performance-based design option 5.1.2
Occupancy .....*see also* specific occupancies
Categories 35.3
Certificate of ... 1.7.6.3.4.4, 1.7.6.3.5.1, 1.7.6.6.1.3, 1.7.6.7, 15.7.3.1
Conditions of 1.7.6.7.5
Connection of services 1.7.6.7.4
Revocation of 1.7.7.3
Temporary 1.7.6.7.3
Classification ..... 4.5.4.1(2), 6.1, A.6.1.2.1 to A.6.1.13.1; *see also* specific occupancies
Change of .....*see* Change of occupancy classification
Risk category classifications 15.7.3.3
Conditions for 4.5.4
Definition 3.3.424, 35.2.22
Existing occupancy, continuation of 1.7.5.2.2, 1.7.6.7.2
Multiple .....*see* Multiple occupancies
Unlawful 1.7.7.3
Occupancy importance factor *(I)* .....*see* Importance factor *(I)*
Occupant characteristics
Definition 3.3.426
Performance-based design option ..... 5.4.3, 5.8.5, A.5.4.3.1 to A.5.4.3.6
Occupant load .....*see* Loads
Occupant load factor .....*see* Load factor
Occupant notification .....*see* Notification
Occupiable (accessibility) (definition) 3.3.429
Occupiable story .....*see* Story
Off-site conditions 5.4.5.2
Oil-burning equipment ..... 6.4.2.47, 50.1(2)
One- and two-family dwellings ..... Chap. 22, 35.1.2.3; *see also* Manufactured homes
Building services 22.4.2, 22.5, 49.2.2.7
Concrete walls/slabs 41.2, 41.6.3.3
Definition 3.3.171.1, 6.1.8.1.1, A.6.1.8.1.1
Energy efficiency 51.3
Exterior walls 7.3.2.2
Fire department access for 7.1.5.2.1.1
Flood-resistant construction ..... 39.11.1.2.2(3)
General requirements ..... 22.1, Table 34.3.2.3, A.22.1.1.2
Live loads ..... Table A.35.6.1.2
Loads 36.1.1, 36.1.2
Masonry veneer 43.8.2
Means of egress 22.1.2.2
Means of escape ..... 22.2, A.22.2, Table A.35.6.1.2
Multiple occupancy 22.1.2
Occupancy classification 15.7.3.4.5, 22.1.3
Protection 22.3, A.22.3.5
Quality assurance ..... 40.2.3.2(1)
Radon control methods 49.2.5, A.49.2.5.2.3
Rehabilitation of 22.1.1.4
Additions 15.8.5
Change of classification 15.7.3.4.5
Reconstruction 15.6.2.4.2, 15.6.2.6.1.2, 15.6.2.8.1.1
Roof covering classification ..... 38.2.2(1)
Separated occupancies, fire-resistant rated separations for ..... Table 6.2.4.1(a), Table 6.2.4.1(b)
Sloped glazing, screens for ..... 46.8.3.6(4), 46.8.3.6(5)
Townhouses, separation between 22.4
Walls, glazing in ..... 46.5.2.2(2)
One-family dwellings (definition) 3.3.171.2
Open-air mercantile operations 27.4.3
Definition 3.3.437
Openings and opening protectives ..... 8.7, A.8.7.3 to A.8.7.9; *see also* Communicating openings; Fire doors; Fire windows; Penetrations; Vertical openings
Apartment buildings 25.3.1, 25.3.5.7, 25.3.5.10, 25.3.6.4
Business occupancies 28.3.1, 28.3.6.2
Corridors .....*see* Corridors
Day-care occupancies 18.3.1, 18.3.2.2.2
Definition 3.3.437, 35.2.24
Detention and correctional occupancies ..... 21.3.7.4, Table 21.3.8.1, 21.4.4.6, Table 21.4.4.12, A.21.3.7.4(1), A.21.4.4.6.2, A.21.4.4.6.4
Ducts and air transfer .....*see* Ducts and air transfer openings
Educational occupancies 17.3.1, 17.3.2.2.2, 17.3.5.4
Elevators and conveying systems 54.4, 54.5.4
Enhanced fire compartments D.3.5, D.3.9, D.5.2
Exit enclosures ..... 11.1.3.2.1.4 to 11.1.3.2.1.6, A.11.1.3.2.1.5, A.11.3.2.1.6(2)
Exterior walls ..... 7.1.3, 7.3.5, 15.7.3.9.3, 15.10.5.3, 37.1.3.1(1), 37.1.4, 37.3.2
Fire barriers ..... 27.1.2.2.2, 28.1.2.2.2, A.28.1.2.2.2(4)
Fire walls ..... 8.3.1.6, 8.3.2.8, 8.3.3.10, A.8.3.2.8.3 to A.8.3.2.8.5, A.8.3.3.10.3, A.8.3.3.10.4
Flood ..... 35.4.2.6.2(6), 39.11.1.1, 39.12.3.1.1, 39.12.3.1.3, 39.12.3.2.3, A.39.11.1.1
Floor, radon protection 49.2.5.3.3.1, 49.2.5.3.3.9
Health care occupancies 19.1.1.4.1.1, 19.1.2.4, 19.2.2.5.4, 19.2.2.5.5, 19.3.1, 19.3.6.5
Ambulatory health care occupancies 20.3.6.3
Horizontal assemblies 8.6.2
Horizontal exits, fire barriers forming 11.2.4.3.5
Hotels and dormitories 24.3.1, 24.3.5.6, 24.3.6.4
Industrial occupancies 29.3.1
Lodging or rooming houses 23.3.1
Mercantile occupancies 27.3.1, 27.3.6.2
Anchor buildings 27.4.4.3.3
Outside stairs 11.2.2.7.4
Parking structures ..... 7.4.3.6.6(4)
Projection rooms 16.4.6.3.1, 16.4.6.5
Prosceniums 16.4.5.6
Residential board and care occupancies 26.2.3.1, 26.3.3.1
Roof 8.2.2.3.2, 8.2.2.3.3
Shafts, openings into 15.7.3.6.4
Smoke barriers ..... 8.11.4, 21.3.7.4, A.21.3.7.4(1)
Smoke partitions 8.10.3, A.8.10.3.4
Smokeproof enclosures 11.2.3.7
Stage 16.4.5.2.3, 16.4.5.6
Stairway enclosures 11.2.2.5.2, 11.6.5, 23.2.2.1, A.11.2.2.5.2
Storage occupancies 30.2.2.5.2, 30.3.1, A.30.2.2.5.2
Parking structures 30.8.3.1
Towers 31.6.11.1
Vertical .....*see* Vertical openings
Open parking structures 6.4.2.54, 30.8.1.6.6, 30.8.3.5.4.2
Above enclosed parking structures 7.4.3.6.6
Alarms and alarm systems 30.8.3.4
Apartment buildings 25.3.5.9
Beneath other occupancies 7.4.3.6.7, 7.4.3.6.8
Definition 3.3.601.9, 30.8.1.3
Enhanced fire compartments D.6.8, D.6.9, D.7.2
Health care occupancies ..... 19.3.7.1.6(4)
Height and area requirements 7.4.1.3.2
Hotels and dormitories 24.3.5.8
Mercantile occupancies 27.1.2.2.2
Ramps ..... 30.8.2.2.6.1(2)
Ventilation 49.2.2.4
Open plan educational or day-care buildings ....*see* Flexible plan and open plan educational or day-care buildings
Open space 7.6.2.1, 7.6.3.5, A.7.6.2.1
Open structures ..... 31.5; *see also* Open parking structures
Assembly occupancies 16.1.6.3, A.16.4.2
Definition 3.3.601.10, 31.5.1, A.3.3.601.10
Means of egress 31.5.2
Protection 31.5.2.9, 31.5.2.10
Open system use .....*see* Use
Operable parts (accessibility) 12.5
Definition 3.3.438
Ordinary hazard contents 6.3.2.3, A.6.3.2.3
Atriums ..... 8.12.3(3)
Communicating space, vertical openings ..... 8.12.2(5)

--`,,```,,,,````-`-`,,`,,`,`,,`---

Copyright National Fire Protection Association
Provided by IHS under license with NFPA
No reproduction or networking permitted without license from IHS

Not for Resale

Doors for occupancies with 11.2.1.4.1.6
Automatic closing doors 11.2.1.8.2
Delayed-egress locks 11.2.1.6.1, A.11.2.1.6.1.6
Exterior walls, exposure of ..... Table 15.7.3.9.1.1
Height and area requirements for occupancies with .... Table 7.4.1
Unlimited area buildings 7.6.3.2.1, 7.6.3.3
Industrial occupancies ..... 29.1.3.1.1(1), 29.1.3.1.2(1), 29.2.4.1.2
One- and two-family dwellings 22.1.4
Storage occupancies ..... 30.3.4.1(2), Table 34.3.2.3
Parking structures 30.8.1.5
Organic coating manufacturing facilities 6.4.2.48
Organic (definition) 3.3.440, 38.1.1.8
Organic peroxides ..... 6.3.2.4.2(2), 6.3.2.4.3(4), 6.3.2.4.4(5), Table 34.1.3.1
Assembly occupancies ..... Table 34.1.3.2(a)
Business occupancies ..... Table 34.1.3.2(c)
Class I organic peroxide ..... Table 34.1.3.1, Table 34.3.2.6, Table 34.3.7.2.1.2(A), Tables 34.1.3.1.2(a) to (h)
Definition 3.3.440.1, 3.3.440.2, 3.3.440.3
Class II organiz peroxide ..... Table 34.1.3.1, Table 34.3.4.4.1, Table 34.3.7.2.1.2(A), Tables 34.1.3.1.2(a) to (h)
Definition 3.3.440.1, 3.3.440.2, 3.3.440.3
Class III organic peroxide ..... Table 34.1.3.1, Table 34.3.4.4.1, Table 34.3.7.2.1.2(A), Tables 34.1.3.1.2(a) to (h)
Definition 3.3.440.1, 3.3.440.2, 3.3.440.3
Class IV organic peroxide ..... Table 34.1.3.1, Tables 34.1.3.1.2(a) to (h), Table 34.3.7.2.1.2(A)
Definition 3.3.440.4
Class V organic peroxide ..... Table 34.1.3.1, Tables 34.1.3.1.2(a) to (h), Table 34.3.7.2.1.2(A)
Definition 3.3.440.5
Day-care occupancies ..... Table 34.1.3.2(e)
Definition 3.3.440, A.3.3.440
Detention and correctional occupancies ..... Table 34.1.3.2(g)
Educational occupancies ..... Table 34.1.3.2(d)
Explosion control ..... Table 34.3.2.6
Floors, high hazard contents storage rooms 34.3.2.9
Health care occupancies ..... Table 34.1.3.2(b), Table 34.1.3.2(f)
Residential occupancies ..... Table 34.1.3.2(h)
Semiconductor manufacturing operations ..... Table 34.3.7.2.1.2(A), Table 34.3.7.2.4.6
Storage 6.4.2.59
Oriented strand board .....*see* Wood structural panels
Outdoor facilities .....*see* Open structures
Outdoor signs 32.6
Outside stairs 11.2.2.7, 11.6.5, A.11.2.2.7.2
Accessibility 12.10
Apartment buildings ..... 25.2.4.2(2), 25.3.4.1.3(2)
Business occupancies ..... 28.2.4.3(4), 28.2.4.4(3)
Definition ..... 3.3.443, 11.2.2, A.11.2.2.2.1.1 to A.11.2.2.7.5
Industrial occupancies 29.6.3.2
Lodging or rooming houses 23.2.1.2, 23.2.1.3, 23.3.2, A.23.3.2
Residential board and care occupancies 26.2.2.1.2, 26.2.2.5, A.26.2.2.5.2
Storage occupancies 30.7.2.2, 30.7.3
Outside storage, hazardous materials 34.2.5
Owners
Definition 3.3.444
Quality assurance programs, role in 40.1.2, 40.2.5, 40.2.6.3, 40.3.1.2, 40.3.2.1
Oxidizers ..... 6.3.2.4.2(3), 6.3.2.4.3(5), 6.3.2.4.4(6), 6.3.2.4.4(7), Table 34.1.3.1
Assembly occupancies ..... Table 34.1.3.2(a)
Business occupancies ..... Table 34.1.3.2(c)
Class 1 oxidizer ..... Table 34.1.3.1, Tables 34.1.3.1.2(a) to (h), Table 34.1.3.3.1(a), Table 34.3.7.2.1.2(A)
Definition 3.3.445.1
Class 2 oxidizer ..... Table 34.1.3.1, Tables 34.1.3.1.2(a) to (h), Table 34.1.3.3.1(a), Table 34.3.4.4.1, Table 34.3.7.2.1.2(A)
Definition 3.3.445.2
Class 3 oxidizer ..... Table 34.1.3.1, Tables 34.1.3.1.2(a) to (h), Table 34.1.3.3.1(a), Table 34.3.4.4.1, Table 34.3.7.2.1.2(A)
Definition 3.3.445.3
Class 4 oxidizer ..... Table 34.1.3.1, Tables 34.1.3.1.2(a) to (h), Table 34.3.2.6, Table 34.3.7.2.1.2(A)
Definition 3.3.445.4
Day-care occupancies ..... Table 34.1.3.2(e)
Definition 3.3.445, A.3.3.445
Detention and correctional occupancies ..... Table 34.1.3.2(g)
Educational occupancies ..... Table 34.1.3.2(d)
Explosion control ..... Table 34.3.2.6
Floors, high hazard contents storage rooms 34.3.2.9
Health care occupancies ..... Table 34.1.3.2(b), Table 34.1.3.2(f)
Industrial occupancies ..... Table 34.1.3.3.1(a)
Mercantile occupancies ..... 6.4.2.50, Table 34.1.3.3.1(a)
Residential occupancies ..... Table 34.1.3.2(h)
Semiconductor manufacturing operations ..... Table 34.3.7.2.1.2(A), Table 34.3.7.2.4.6
Storage occupancies ..... 6.4.2.51, Table 34.1.3.3.1(a)
Oxidizing gas ..... 6.3.2.4.4(8), Table 34.1.3.1
Assembly occupancies ..... Table 34.1.3.2(a)
Business occupancies ..... Table 34.1.3.2(c)
Day-care occupancies ..... Table 34.1.3.2(e)
Definition 3.3.270.5
Detention and correctional occupancies ..... Table 34.1.3.2(g)
Educational occupancies ..... Table 34.1.3.2(d)
Health care occupancies ..... Table 34.1.3.2(b), Table 34.1.3.2(f)
Residential occupancies ..... Table 34.1.3.2(h)
Semiconductor manufacturing operations .... Table 34.3.7.2.1.2(A)
Oxygen
Bulk oxygen systems facilities 6.4.2.53
Oxygen-fuel gas systems facilities 6.4.2.52

-P-

Panels ....*see* Gypsum panel products; Light-transmitting plastic; Wall panels; Wood structural panels
Panic hardware 11.2.1.2.3.2, 11.2.1.5.12, 11.2.1.7, 11.2.1.13, A.11.2.1.5.12
Assembly occupancies ..... 16.2.2.2.3, 16.2.2.2.4(2)
Day-care occupancies 18.2.2.2.2
Definition 3.3.299.2
Educational occupancies 17.2.2.2.2
Reconstruction requirements 15.6.2.1.4.9
Parapets 37.1.3, 37.3.5
Definition 3.3.449
Enhanced fire compartments D.3.8
High challenge fire walls 8.3.2.6.1, 8.3.2.12, A.8.3.2.6.1, A.8.3.2.12
Parking spaces, accessible ..... 12.8, 12.16.1 Ex. 2, 12.16.5
Parking structures ..... 6.4.2.54, 30.8, A.30.8.1.1; *see also* Garages
Business occupancies ..... 28.1.2.2, A.28.1.2.2.2(4)
Electrically supervised ..... 19.3.7.1.6(4)
Enhanced fire compartments ..... D.6.6 to D.6.9, D.7.2
Entrances 12.6.4.2
Fire walls 8.3.3.6.1
General requirements 30.8.1, A.30.8.1.1
Height and area requirements 7.4.3.6.5
Means of egress 30.8.2
Mercantile occupancies ..... 27.1.2.2, 27.4.4.3.4, A.27.1.2.2.2(4)
Mixed occupancies 30.8.1.2
Open .....*see* Open parking structures
Protection ..... 7.4.3.6.5(4), 27.1.2.2.2, 30.8.3
Residential board and care occupancies 26.3.3.7.5
Signs ..... 12.16.1 Ex. 2
Valet parking 12.9.4
Van parking ..... 12.8.2.4, 12.8.3.1 Ex. 1
Ventilation systems ..... 49.2.2.4 to 49.2.2.6
Partial height partition .....*see* Partitions

Copyright National Fire Protection Association
Provided by IHS under license with NFPA
No reproduction or networking permitted without license from IHS
Not for Resale

Particleboard 45.5.10
Definition 3.3.452, 45.2.6, A.3.3.452, A.45.2.6
Fireblocks ..... 8.14.2.4(1)
Particulate exhaust system facilities 6.4.2.23
Partitions .....*see also* Walls
Business occupancies 28.3.7
Day-care occupancies 18.4.3.3
Definition 3.3.453, 35.2.25, A.3.3.453
Deflection limits ..... Table 35.1.2.8.1.1
Detention and correctional occupancies 12.32.5.2
Doors in folding partitions 11.2.1.12
Educational occupancies ..... 17.3.3.2(3)
Finish .....*see* Interior finish
Fire-resistant ..... 1.7.6.3.1.6, 7.2.7.2.2(1), 8.2.2.4.3.1
Flexible plan buildings 17.4.3.3, 35.6.9.2
Health care occupancies ..... 19.2.5.6.1.4, 19.3.6.1, A.19.3.6.1(3)
Judicial facilities 12.31.4.2
Light-transmitting plastics 48.7.11
Live loads 35.6.9
Partial height (definition) 3.3.453.1
Smoke ..... 8.10, 26.2.3.6.2, 26.3.3.6.3, A.8.10.1 to A.8.10.3.4
Ambulatory health care occupancies ..... 20.3.6.1(1)
Apartment buildings 25.2.2.10.2, 25.3.2.3
Business occupancies 28.2.2.12.2
Definition 3.3.453.2, A.3.3.453.2
Hotels and dormitories 24.2.2.12.2, 24.3.2.4
Lodging or rooming houses 23.3.5.1
Mercantile occupancies 27.2.2.12.2
Parking structures 30.8.1.6.3
Residential board and care occupancies ..... 26.2.3.1.1, 26.2.3.1.2, 26.2.3.2.3(2)
Special hazard protection 8.15.2
Tenant spaces, separation of 27.4.4.3.5.1, 27.4.4.3.5.2
Type IV construction 7.2.5.6.3, D.2.5.6.3
Weight of (dead load) 35.5.3
Passenger loading zones 12.9
Passive sub-slab depressurization system ...*see* Depressurization system
Penetrations ..... 8.8, A.8.8.2.2.1(1) to A.8.8.8.5; *see also* Openings
Ducts and air transfer openings .....*see* Ducts and air transfer openings
Exit enclosures ..... 11.1.3.2.1.6 to 11.1.3.2.1.8
Exterior walls ..... 37.3.2(1)
Fire barrier walls 8.4.6
Firestop systems and devices required ..... 8.8.2, 8.8.6.1, 8.8.7.1, A.8.8.2.2.1(1)
Fire walls 8.3.1.7, 8.3.2.9, 8.3.2.15, 8.3.3.11, A.8.3.2.9
Floor-ceiling and roof-ceiling assemblies 8.6.3
Insulation and coverings 8.8.4
Membrane 8.6.1.3, 8.8.1, 8.8.7, 8.10.4.1, 8.11.5.1
Definition 3.3.455.1, A.3.3.455.1
One- and two-family dwellings 22.4.6
Plans for 1.7.6.3.1.6
Quality assurance for 40.9
Residential board and care occupancies 26.2.3.6.3
Roof 8.2.2.3.3
Sleeves used for 8.8.3
Smoke barriers 8.11.5
Smoke partitions 8.10.4
Stairway enclosures 15.7.3.6.2.3
Through-penetration 8.8.1, 8.10.4.1, 8.11.5.1
Definition 3.3.455.2, A.3.3.455.2
Transitions 8.8.6
Vibration isolation 8.8.5, 8.10.4.3, 8.11.5.6
Penthouses (definition) 3.3.456, A.3.3.456
Performance areas 12.6.2.6, 12.6.7.1
Performance-based design option ..... 4.3.3, 4.5.4.2, Chap. 5
Characteristics and assumptions 5.4, 5.8.5, A.5.4
Data sources 5.1.4
Design scenarios 5.5, A.5.5
Documentation ..... 5.8, A.5.8.1 to A.5.8.11
Evaluation of proposed designs 5.6, 5.8.13
Final determination 5.1.5, A.5.1.5
General requirements 5.1, A.5.1
High hazard contents, alternatives for 34.1.4
Independent review of design 5.1.3, A.5.1.3
Maintenance of design features 5.1.6, A.5.1.6
Performance criteria ..... 5.1.6.2, 5.2, 5.8.4, A.5.2.2 to A.5.2.8.2
Retained prescriptive requirements 5.3, 5.8.10
Smokeproof enclosures 11.2.3.2
Use of 5.6.2, 5.8.14
Performance criteria ..... 5.1.6.2, 5.2, 5.8.4, A.5.2.2 to A.5.2.8.2
Definition 3.3.457, A.3.3.457
Permanent (definition) 3.3.458, 32.1.3.6
Permanent structures .....*see* Structures
Permissible exposure limit (PEL) (definition) ... 3.3.354.3, A.3.3.354.3
Permits 1.7.2, 1.7.6.1
Appeals .....*see* Appeals, board of
Applications for 1.7.6.2
Building rehabilitation 15.1.3, 15.1.4, A.15.1.3.1.1
Code, compliance with 1.7.6.5.2
Conditions of 1.7.6.5
Construction documents 1.7.6.3
Definition 3.3.461
Fees 1.7.6.3.4.4, 1.7.6.4
Flood-resistant construction C.1.4, C.2, C.3
High hazard contents, information on 34.2.3
Inspections ..... 1.7.6.6, A.1.7.6.6.3.4(C)
Other jurisdictions 1.7.6.1.2, C.2.2
Posting of 1.7.6.5.1, 1.7.6.6.1.6
Preliminary meeting 15.1.3, A.15.1.3.1.1
Quality assurance programs, submission of 40.2.7
Required 1.7.6.1.1
Revocation of 1.7.7.2
Time limits 1.7.6.5.3
Personal care (definition) 3.3.463, A.3.3.463
Person (definition) 3.3.462
Pesticide storage 6.4.2.55
Photoluminescent 16.4.7.7.2
Definition 3.3.464, A.3.3.464
Signs 11.10.4, 11.10.7.2, A.11.10.4, A.11.10.7.2
Physical hazard material (definition) ..... 3.3.388.12; *see also* Combustible liquids; Explosive material; Flammable liquids; Flammable solids; Organic peroxides; Oxidizers; Pyrophoric material; Unstable (reactive) material; Water-reactive material
Pictogram (accessibility) (definition) 3.3.466
Piers, concrete .....*see* Concrete
Piers (wharfs) ... 6.4.2.41, 31.8; *see also* Boarding piers (accessibility)
Fishing piers and platforms ... 12.6.2.14, 12.6.7.10, 12.37, 12.45.11
Recreational boating facilities 12.6.2.10, 12.35.3, 12.45.9
Piles .....*see* Foundations
Pinrails 16.4.5.7
Definition 3.3.467
Pipes and piping
Hazardous production materials (HPM) 34.3.7.3.1
Health care occupancies ..... 53.1(3)
High hazard materials conveyed by ..... 8.3.2.9.5, 8.3.2.11, 34.3.7.2.1.5(A), A.8.3.2.11
Insulation and covering on 8.16.7
One- and two-family dwellings 22.4.2
Penetrations for ..... 8.3.2.9.5, 8.3.2.11, 8.8.2, 8.8.6, 8.8.7, 11.1.3.2.1.6, A.8.3.2.11, A.8.8.2.2.1(1), A.11.1.3.2.1.6(2)
In plenums 7.2.3.2.15.3
Roof drainage 38.6.3
Structural members, placement in 7.2.7.11
Vermin proofing B.2.5
Water-reactive materials in 34.3.4.5.2, 34.3.5.7.2
Plain concrete .....*see* Concrete
Plants .....*see also* Coal preparation plants; Drycleaning plants; Industrial occupancies
Special operations, requirements for 6.4

Copyright National Fire Protection Association
Provided by IHS under license with NFPA
No reproduction or networking permitted without license from IHS
Not for Resale

Plaster ..... 15.7.3.8.1.5, 15.10.5.9, 26.2.3.6.1(1); *see also* Gypsum plaster; Gypsum veneer plaster; Portland cement plaster
Gypsum .....*see* Gypsum plaster
Historic buildings 15.10.4.9
Plastic ..... Chap. 48; *see also* Foam plastic insulation
Awnings and canopies ..... 32.4.4, 32.4.5.3(2), 32.4.5.3(3)
Cellular or foamed 10.4.3, A.10.4.3.1
Definition 3.3.471.1, A.3.3.471.1
Interior finish 48.4.4.3, 48.5.2, 48.5.3
Kiosks ..... 27.4.4.12.1(3)
Signs ..... 27.4.4.11(6), 48.8.4
Definition 3.3.471, A.3.3.471
Glass fiber reinforced ..... 48.4.1.8.3(2)
Definition 3.3.471.2, 48.2.5.1
Glazing .....*see* Glazing
Interior finish and trim 48.4.4.3, 48.5, 48.6.1, 48.7.1.2
Light-transmitting .....*see* Light-transmitting plastic
Signs .....*see* Signs
Veneers 48.6, 48.7.2
Platforms
Assembly occupancies 16.4.5, A.16.4.5.10
Change of use ..... 15.7.2.1.1(7)
Guards 11.1.8.2
Catch, demolition operations A.14.1
Definition 3.3.473, A.3.3.473
Elevated ..... 11.2.9.1(2), 11.2.11.1(2), Table A.35.6.1.2
Enhanced fire compartments ..... D.2.3.2.5 to D.2.3.2.7
Fishing (accessibility) .....*see* Fishing piers and platforms (accessibility)
Industrial occupancies 29.2.5.3
Live loads ..... Table A.35.6.1.2
Speaker's 12.6.7
Stairways ..... 11.2.2.3.1.2, 16.2.2.3.1(2)
Station, transportation facilities 12.45.6
Temporary 16.4.5.1
Definition 3.3.473.1
Type I and Type II construction ..... 7.2.3.2.5 to 7.2.3.2.7, D.2.3.2.5 to D.2.3.2.7
Wheelchair (platform) lifts 12.6.7
Play areas (accessibility) 12.6.2.17, 12.6.4, 12.40, 12.45.14
Platform (wheelchair) lifts 12.6.7.8
Stairs ..... 12.10 Ex. 4
Plenums ..... 8.14.1.2(2)
Definition 3.3.474
Enhanced fire compartments ..... D.2.3.2.14 to D.2.3.2.20
Insulation ..... 8.16.1.2(2), 48.4.3
Type I and Type II construction ..... 7.2.3.2.14 to 7.2.3.2.20, D.2.3.2.14 to D.2.3.2.20
Plumbing systems ..... 7.1.2, Chap. 53
Additions 15.8.8
Change of use requirements 15.7.2.6
Code, compliance to 15.1.2.4, 15.1.3.1.1, 15.3.1.3, 15.5.1.5, A.15.1.2.4.2, A.15.1.3.1.1
Concealed spaces ..... 8.14.3(3)
Discharge ..... 15.4.7.1, 15.7.2.6.2 to 15.7.2.6.4, 15.8.8, C.7.3
Drinking fountains and water coolers 12.11, 17.2.3.2.2
Flood-resistant construction 39.10, 53.2, A.39.10
Inspection ..... 1.7.6.6.3.4(L)
Modifications 15.5.1.3.2, 15.5.1.3.4, 15.5.1.3.5, 15.5.1.5, 15.5.7
Occupancy classification, change of 15.7.3.11
One- and two-family dwellings 22.4.2
Penetrations .....*see* Penetrations
Performance-based design option 5.3.8
Permits 1.7.6.1.1.2
Plans 1.7.6.3.1.4
Renovations 15.4.7
Repairs 15.3.7
Sinks, kitchen 12.12.3, 15.3.7.2
Toilet and bathing facilities 12.13.3
Water conservation 15.4.7.2
Weight of equipment (dead load) 35.5.2
Plywood panels .....*see* Wood structural panels
Pneumatic tubing, plenums 7.2.3.2.15.2, D.2.3.2.15.2
Points .....*see* Boiling point; Flash point
Pools, swimming ..... 7.6.3.9, 32.8, 46.5.2.1(10)
Accessibility 12.42, 12.45.15
Catch pool (accessibility) ..... 12.42.2 Ex. 3
Definition 3.3.477.1
Deck, slip resistance of A.11.1.6.4
Definition 3.3.478.4, 32.1.3.7.3
Inspection ..... 1.7.6.6.3.4(N)(2)
Modifications, electrical systems ..... 15.5.5.5(10)
Public 32.8.1, 32.8.4.2
Definition 3.3.477.2, 32.1.3.7.1
Residential 32.8.1, 32.8.4.1
Definition 3.3.477.3, 32.1.3.7.2
Shelters, use of light-transmitting plastic in ..... 48.7.8.4.2(2)
Porches ..... 37.2.2, 37.3.2(6)
Portable spas .....*see* Spas
Portland cement plaster ..... 47.1, 47.4, 48.4.1.8.3(3), A.47.1.5.9.2
Definition 3.3.470.3, 47.1.5.8.3
Power supplies .....*see also* Emergency power; Generators; Standby power; Utility services
Enhanced fire compartments, power-generation structures ... D.7.5
Temporary 14.4
Prefabricated
Assemblies, inspection of ..... 1.7.6.6.1.3, 1.7.6.6.2, 1.7.6.6.3.4(O), 40.3.4
Buildings .....*see also* Manufactured homes
Flood-resistant construction C.2.1
Definition 3.3.480
Panels, foam plastic insulation for 48.4.1.4.2
Prescriptive-based design option 4.3.2
Preservative-treated wood .....*see* Wood
Press boxes (accessibility) 12.6.2.7
Pressure vessels 15.3.8, 15.4.8
Primary level of exit discharge .....*see* Exit discharge
Private building or facility
Accessibility
Definition 3.3.204.7
TTYs 12.17.4.2.2, 12.17.4.3.2
Definition 3.3.65.14
Private fire service mains 55.9
Private garages .....*see* Garages
Private party tents .....*see* Tents
Production studios ..... 6.4.2.43, 15.5.5.5(9), 15.7.2.4.1(9), 15.7.2.4.1(10)
Definition 3.3.487
Professional engineer ... 32.7.4.2.1(1), 55.7.2, C.2.3(2), C.2.5, C.2.7.2
Definition 3.3.488
Soil investigation 36.3.2
Projection rooms .....*see* Motion picture projection rooms
Property lines
Definition 3.3.489
Encroachments beyond 13.1.1, 13.5
Exterior walls, distance from ..... 37.1.3.1(3), 37.4.5(1)
High hazard contents, buildings containing 34.3.3.3, 34.3.4.3, 34.3.5.3
Roof edge separated from ..... 38.2.2(1)
Between townhouses ..... 25.1.1.3(2)
Property protection 4.1.1, A.4.1.1
Proposed design .....*see* Design
Proscenium walls .....*see* Walls
Protruding objects 12.4
Public building or facility
Accessibility
Definition 3.3.204.8
Telephones 12.17.4.2.1, 12.17.4.3.1
Definition 3.3.65.15
Public entrance (accessibility) .....*see* Entrances
Public pools .....*see* Pools
Public spas .....*see* Spas
Public use .....*see* Use

Copyright National Fire Protection Association
Provided by IHS under license with NFPA
No reproduction or networking permitted without license from IHS
Not for Resale

Public ways ..... 7.6.2.1, 7.6.3.1, 7.6.3.2.1, 7.6.3.3(2), 7.6.3.4, 7.6.3.7(3), 7.6.3.8, 7.6.3.9(5), A.7.6.2.1
Accessible means of egress 11.5.4.3
Area of refuge access to ..... 11.2.12.2.2, 11.2.12.2.3, 11.2.12.2.4, 21.3.7.1.2(1), A.11.2.12.2.3, A.11.2.12.2.4
Definition 3.3.650.1
Emergency lighting A.11.9.1.1
Encroachments of structures into public right of way ... Chap. 13
Exit discharge 11.2.3.5, 11.7.1, 11.7.3, 11.8.1.1, 11.9.1.2, 24.2.7.3, A.11.7.1, A.11.8.1.1
Exterior wall located on ..... 37.1.3.1(3)
Public welfare 4.1.1, 4.1.6, A.4.1.1, A.4.1.6, C.1.1
Purpose of code 1.2, A.1.2
Pyrophoric material ..... 6.3.2.4.2(4), 6.3.2.4.3(6), Table 34.1.3.1
Assembly occupancies ..... Table 34.1.3.2(a)
Business occupancies ..... Table 34.1.3.2(c)
Day-care occupancies ..... Table 34.1.3.2(e)
Definition 3.3.388.13
Detention and correctional occupancies ..... Table 34.1.3.2(g)
Educational occupancies ..... Table 34.1.3.2(d)
Explosion control ..... Table 34.3.2.6
Floors, high hazard contents storage rooms 34.3.2.9
Health care occupancies ..... Table 34.1.3.2(b), Table 34.1.3.2(f)
Residential occupancies ..... Table 34.1.3.2(h)
Semiconductor manufacturing operations ... Table 34.3.7.2.1.2(A), Table 34.3.7.2.4.6
Pyrotechnic article (definition) 3.3.500
Pyrotechnic device facilities 6.4.2.25
Pyroxylin plastic storage 6.4.2.56

-Q-

Quality assurance ..... 1.7.6.6.1.3, Chap. 40
Definition 3.3.501, 40.1.3.3
Extent of 40.2, A.40.2.3.3
Exterior insulation and finish systems 37.5.4
Performance-based design option 5.3.7
For structural components and assemblies 40.3, 41.4, 43.5
Quality assurance plan ..... 40.3.1.1, 40.3.2, 40.3.3; *see also* Quality assurance program
Definition 3.3.502, 40.1.3.4
Quality assurance program
Definition 3.3.503, 40.1.3.5
Remedial action 40.2.9
Reports 40.2.8, 40.2.10
Structures requiring 40.2.3, A.40.2.3.3
Quality control program (definition) 3.3.504, 40.1.3.6

-R-

Racetrack facilities 6.4.2.57
Raceways, in plenums 7.2.3.2.15.4, D.2.3.2.15.4
Rack storage 7.4.3.6.4
Radioactive materials facilities 6.4.2.58
Radio masts 32.14.2
Radon control methods 49.2.5, A.49.2.5.2.3
Railings ..... *see* Handrails
Raised areas, accessibility of 12.3.3
Boxing or wrestling rings 12.3.13
Courtroom stations ..... 12.6.2.4 Ex. 1
Diving boards and diving platforms 12.3.14
Refereeing, judging, and scoring areas 12.3.10
Restaurant dining areas ..... 12.6.2.5 Ex. 2
Ramps 11.2.5, 11.7.4, 11.8.1.1, 11.9.1.2, A.11.2.5.7.1, A.11.2.5.7.2, A.11.8.1.1
Apartment buildings 25.2.2.6, 25.2.3.2, 25.3.4.1.1
Assembly occupancies ... 7.6.3.9(4), 16.2.2.6, 16.2.3.3.3, 16.3.1(1)
Aisles serving seating not at tables 16.2.5.6.4, 16.2.5.6.5, 16.2.5.6.9, A.16.2.5.6.4, A.16.2.5.6.5, A.16.2.5.6.9
Smoke-protected seating ..... 16.4.2.3(4)
Theater-type seating ..... Table 16.2.3.2.1, 16.2.3.2.2(4)
Boat launch (accessibility) 12.6.2.10
Business occupancies 28.2.1.3.1, 28.2.1.3.2, 28.2.2.6
Change in levels of means of egress 11.1.7.2, A.11.1.7.2
Day-care occupancies 18.2.2.6
Definition 3.3.505, 11.2.5, A.11.2.5.7.1, A.11.2.5.7.2
Details 11.2.5.4
Detention and correctional occupancies 21.2.2.6, 21.2.3.2
Dimensional criteria 11.2.5.3
Educational occupancies 17.2.2.6
Glazing adjacent to ..... 46.5.2.1(11), 46.5.2.2(4)
Guards ..... *see* Guards
Handrails ..... *see* Handrails
Health care occupancies ... 19.2.2.6, 19.2.3.3, 19.2.3.4, 19.2.4.2(4), A.19.2.3.3, A.19.2.3.4(1), A.19.2.3.4(4)
Hotels and dormitories 24.2.2.6, 24.2.3.2
Industrial occupancies 29.2.2.6, 29.2.5.3
Mercantile occupancies 27.2.1.2, 27.2.2.6, 27.2.3.2
Miniature golf facilities ..... 12.45.13. Ex.
Occupancy classification, change of 15.7.3.5.1.1
One- and two-family dwellings 22.2.2.2, 22.2.5
Outside 11.2.5.7
Parking structures ..... 7.4.3.6.5(2), 30.8.2.2.6, 30.8.3.1.1.3 to 30.8.3.1.1.5
Performance-based design option ..... 5.3.2(5)
Play areas 12.45.14.2.5
Residential board and care occupancies 26.3.2.1.6
Skywalk bridges 13.8.6
Slope of 11.1.6.3
Storage occupancies 30.2.2.6
Travel distance to exits, measurement of 11.6.3, A.11.6.3
Rating ..... *see* Fire protection rating; Fire resistance rating
Recirculating air systems 15.6.2.7.1
Reconstruction ..... 1.3.4(2), 15.1.1.1, 15.1.1.2, 15.1.1.4, 15.1.1.6.3, 15.5.1.3.1, 15.5.1.3.3, 15.6, A.15.6.2.1.3
Compliance to codes ..... 15.1.2, A.15.1.2.2.2 to A.15.1.2.4.2
Definition 3.3.507, 15.2.2.4
Historic buildings ..... *see* Historic buildings
Interior finish 15.6.2.2
Nonstructural requirements 15.6.2, A.15.6.2.1.3
Structural evaluation 15.1.5
Recreational boating facilities (accessibility) 12.6.2.10, 12.6.7.10, 12.45.9
Recreational facilities (accessibility) 12.45.8
Recreational vehicles
Definition 3.3.508, A.3.3.559, C.5.4
Flood-resistant construction C.1.5.1, C.2.1, C.9
Refereeing, judging, and scoring areas, raised (accessibility) ... 12.3.10
References ..... Chap. 2, Annex E
Refrigerating equipment ..... 34.1.1.2(4)
Boiler rooms 16.3.2.1.1
Doors
Glazing in ..... 46.5.2.3(4)
Opening from inside A.18.2.2.2.6
Foam plastic insulation ..... 48.3.2.3(2), 48.3.3.5
Hotels and dormitories 24.3.2.1
Rooms for 50.3
Thermal barriers ..... 48.3.3.4(2), 48.3.3.4(3)
Registered architect (definition) 3.3.509
Registered design professional (RDP) 40.1.2
Definition 3.3.511, 40.1.3.7
Fill, use of 36.2.4.3
Flood-resistant construction 39.6.3, 39.12.3.2.1
Load tests, role in 35.1.2.6.2, 35.1.2.7
Quality assurance, role in 40.2.2, 40.2.3.1, 40.2.5
Deferred submittals 40.2.11
Nonstructural components and systems 40.8
Penetrations and joints, quality assurance for 40.9
Remedial action 40.2.9.1
Reports 40.2.8, 40.2.10
Special cases, quality assurance programs for 40.3.12

Copyright National Fire Protection Association
Provided by IHS under license with NFPA
No reproduction or networking permitted without license from IHS
Not for Resale

Stairs and railings, quality assurance for 40.7.1
Structural components and assemblies, quality assurance for 40.3.2.1, 40.3.4.1.1
Regular stages .....*see* Stages
Regulatory floodways .....*see* Floodways
Rehabilitation, building .....*see* Building rehabilitation
Rehabilitation work area .....*see* Work area
Reinforced concrete .....*see* Concrete
Relocation of buildings .....*see* Moved buildings and structures
Relocation of occupants .....*see* Evacuation
Renovations ..... 1.3.4(2), 15.1.1.1, 15.1.1.2, 15.1.1.4, 15.4; *see also* Alterations (alter); Modifications; specific occupancies
Accessibility requirements 15.4.4
Boilers and pressure vessel requirements 15.4.8
Building permit process 15.1.3.2
Compliance to codes ..... 15.1.2, A.15.1.2.2.2 to A.15.1.2.4.2
Definition 3.3.515, 15.2.2.2
Elevators 15.4.4.2.4, 15.4.4.3.4, 15.4.9
Energy efficiency ..... 51.1.1(2)
Historic buildings .....*see* Historic buildings
Nonstructural requirements 15.4.2
Plumbing requirements 15.4.7
Structural requirements 15.1.5, 15.4.3, 15.4.3.2
Repair garages .....*see* Garages
Repairs ... 1.3.4(2), 4.5.5, 4.5.5.3, 15.1.1.1, 15.1.1.2, 15.1.1.4, 15.3; *see also* Construction
Building permit process 15.1.3.2
Compliance to codes ..... 15.1.2, A.15.1.2.2.2 to A.15.1.2.4.2
Definition 3.3.516, 15.2.2.1
Electrical requirements 15.3.5
Elevator 11.2.13.10
Historic buildings .....*see* Historic buildings
Mechanical requirements 15.3.6
Structural requirements 15.3.3
Reports .....*see* Documentation
Required (definition) 3.3.518
Residential board and care occupancies ..... Chap. 26
Accessibility 26.2.1.3, 26.3.1.4
Building services ..... 26.2.3.6.3, 26.2.5, Table 26.3.3.2.2, 26.3.6, 49.2.2.7, A.26.3.6.3.2
Definition 3.3.424.11, 6.1.9.1, A.3.3.424.11, A.6.1.9.1
Egress capacity factors ..... Table 11.3.3.1
Energy efficiency 51.6
Flood-resistant construction ..... 39.11.1.2.2(7)
General requirements ..... 26.1, 34.1.3.2, Table 34.1.3.2(h), Table 34.3.2.3, A.26.1.1.1, A.26.1.5
Height and area requirements ..... Table 7.4.1, 7.4.1.3.3, Table 15.7.3.8.1.1
Historic buildings, transoms in 15.10.4.6
Interior finish .....*see* Interior finish
Large ..... Table 6.2.4.1(b), Table 15.7.3.8.1.1, 26.3, A.26.3.3.3 to A.26.3.6.3.2
Means of egress 26.1.2.2, 26.1.3, 26.3.2, 26.3.3.6.1
Means of escape ..... 26.1.2.2, 26.1.3, 26.2.2, 26.3.2.1.9, A.26.2.2.2(3), A.26.2.2.5.2
Multiple occupancy 26.1.2
Occupancy classification, change of ..... 15.7.3.4.2, Table 15.7.3.5.1.1, 15.7.3.5.1.1(8), 15.7.3.5.1.1(9), 15.7.3.7.3, Table 15.7.3.8.1.1, Table 15.7.3.9.1.1, 15.7.3.10, A.15.7.3.7.3
Occupant load ..... Table 11.3.1.2, 26.3.1.3, 26.3.2.2.3
Protection ..... 26.2.3, 26.3.3, A.26.2.3.2.1 to A.26.2.3.5.2.2, A.26.3.3.3 to A.26.3.3.8
Rehabilitation of 15.8.5, 26.1.1.2
Change of occupancy classification ..... 15.7.3.4.2, Table 15.7.3.5.1.1, 15.7.3.5.1.1(8), 15.7.3.5.1.1(9), 15.7.3.7.3, Table 15.7.3.8.1.1, Table 15.7.3.9.1.1, 15.7.3.10, A.15.7.3.7.3
Electrical systems 15.5.5.3, 15.7.3.10
Modification 15.5.5.3
Reconstruction 15.6.2.4.2, 15.6.2.6.1.2, 15.6.2.8.2
Small ..... Table 15.7.3.8.1.1, 26.2, A.26.2.2.2(3) to A.26.2.3.5.2.2
Additions, smoke alarms in 15.8.5
Corridor door requirements ..... 15.6.2.1.4.3(D)
Energy efficiency 51.6.1
Enhanced fire compartments D.6.5
Height and area requirements 7.4.1.3.3
Reconstruction 15.6.2.4.2
Separated occupancies, fire-resistant rated separations for ..... Table 6.2.4.1(b)
Sloped glazing, screens for ..... 46.8.3.6(4), 46.8.3.6(5)
Walls, glazing in ..... 46.5.2.2(2)
Staff .....*see* Staff
Residential board and care residents
Definition 3.3.521
Evacuation capability A.15.7.3.7.3
Residential dwelling units .....*see* Dwelling units
Residential occupancies .....*see also* Apartment buildings; Dwelling units; Hotels and dormitories; Lodging or rooming houses; One- and two-family dwellings
Accessibility ..... 12.2.3 Ex. 3, 12.3.8, 12.6.2.3.1 Ex. 4, 12.6.2.3.1 Ex. 5, 12.6.4.6, 12.6.5.3, 12.6.5.4, 12.16.5 Ex. 2, 12.24, 12.33, 12.45.5
Platform (wheelchair) lifts 12.6.7.6
Visible alarms 12.15.5
Windows ..... 12.29 Ex.
Definition 3.3.424.12, 6.1.8.1, A.3.3.424.12, A.6.1.8.1
Energy efficiency 51.3, 51.4, 51.5.1, 51.6.1
Enhanced fire compartments D.6.4
Flood-resistant construction 39.11.1.2.2
General requirements ..... Table 34.1.3.2(h)
High hazard contents 34.1.3.2
Live loads ..... Table A.35.6.1.2
Modifications
Electrical systems 15.5.5.4
Habitable rooms, dimensions of 15.5.2.1
Occupancy classification, change of ..... 15.7.3.4.2, Table 15.7.3.5.1.1
Electrical requirements 15.7.3.10
Exterior walls, exposure of ..... Table 15.7.3.9.1.1, 15.7.3.9.3.4
Height and area requirements ..... Table 15.7.3.8.1.1
Occupant load factor ..... Table 11.3.1.2
Parking spaces (accessibility) 12.8.2.3, 12.8.3.2
Radon control methods 49.2.5, A.49.2.5.2.3
Reconstruction, boiler/furnace rooms 15.6.2.8.1
Sprinkler systems 7.5.2, 15.6.2.5.4.6
Residential pools .....*see* Pools
Residential spas .....*see* Spas
Resistance .....*see* Adjusted shear resistance; Corrosion resistance
Resistance factor (definition) .... 3.3.206.3, 35.2.26; *see also* Load and resistance factor design
Restaurants ..... 12.6.2.5; *see also* Assembly occupancies
Change of use requirements, plumbing systems 15.7.2.6.2
Food service lines, accessibility of 12.27.5
Live loads ..... Table A.35.6.1.2
Restricted entrance (accessibility) .....*see* Entrances
Retaining walls 36.9
Definition 3.3.645.14
Rockets .....*see* Model rocket motor manufacturing facilities
Roof assemblies/roofs ..... Table 7.2.1.1.2, Chap. 38; *see also* Construction types; Parapets
Above-deck combustible components 38.3.2, A.38.3.2
Access to roof 4.6, 11.2.2.6.5, A.4.6.4
Assembly occupancies 16.2.4.6
Doors, locked/re-entry 11.2.1.5.9, 11.2.5.1.10
Outside stairs 11.2.2.7.1
Definition 3.3.36.3, 38.1.1.9
Deflection limits, roof members ..... Table 35.1.2.8.1.1, 35.1.2.8.8, A.35.1.2.8.8
Detached buildings 34.3.3.2.2, 34.3.4.4.3, 34.3.5.6
Drainage . 35.1.2.8.8, 35.7.3.2, 38.6, A.35.1.2.8.8, A.38.6.1, A.38.6.2
Enhanced fire compartments ..... D.2.3.1, D.2.3.2.8 to D. 2.3.2.10, D.2.4.1, D.2.5.1, D.2.5.6.5, D.2.6

--`,,```,,,````-`-`,,`,,`,`,,`---

Copyright National Fire Protection Association
Provided by IHS under license with NFPA
No reproduction or networking permitted without license from IHS
Not for Resale

Exit access by means of 11.5.3.1
Exit discharge 11.7.1.3, 11.7.6
Exterior fire exposure 38.2, A.38.2.2
Fiberboard insulation 45.6.11.2
Fire barrier walls, termination of ..... 8.4.4.1(2)
Fire resistance-rated 8.2.1.3
Fire-resistant 1.7.6.3.1.7, 7.2.7.2.1, 8.2.2.1, 8.2.2.3
Fire walls, termination of ..... 8.3.2.13 to 8.3.2.15, 8.3.3.6, A.8.3.2.13, A.8.3.2.14
Flashing .....*see* Flashing
Framing, wood ..... 1.7.6.6.3.4(D), 45.6.5
Hail resistance 38.5
Health care occupancies 19.1.6.2
Ice dam protection 38.9.2.5, 38.9.4.5, 38.9.7.5, 38.9.8.5, 38.9.9.5, 38.9.10.5, 38.9.13.5, 38.9.14.5, A.38.9.2.5, A.38.9.4.5, A.38.9.7.5, A.38.9.8.5, A.38.9.9.5, A.38.9.10.5, A.38.9.13.5, A.38.9.14.5
Inspection ..... 1.7.6.6.3.4(G)
Insulation 8.16.4, 38.3.3, 38.9.1.3
Interior fire exposure 38.3, A.38.3.2
Landscaped roofs 35.7.4
Load .....*see* Loads
Marquees 32.5.6, 32.5.7
Membrane structures as 32.2.1.1, 32.2.2.2, 32.2.3, 32.2.5.3, A.32.2.3.2, A.32.2.5.3
Modifications, electrical systems ..... 15.5.5.5(1)
One- and two-family dwellings 22.4.4, 22.4.6
Performance requirements 38.1.2
Permits 1.7.6.1.1.2
Reroofing ..... 15.4.2.4 to 15.4.2.10, 15.4.4.1.1, 15.4.4.2.1, 15.4.4.3.1, 38.10
Sheathing, wood 45.6.7
Skylights .....*see* Skylights
Sloped glazing .....*see* Glazing
Slope requirements 38.9.2.2, 38.9.3.2, 38.9.4.2, 38.9.5.2, 38.9.6.2, 38.9.7.2, 38.9.8.2, 38.9.9.2, 38.9.10.2, 38.9.11.2, 38.9.12.2, 38.9.13.2, 38.9.14.2, A.38.9.3.2, A.38.9.5.2, A.38.9.6.2, A.38.9.11.2, A.38.9.12.2
Thermal barriers ..... 48.3.3.4(5)
Towers, spires, steeples, and other architectural embellishments 7.4.3.6.1
Type I and Type II construction ... 7.2.3.2.8 to7.2.3.2.10, D.2.3.2.8
Type IV construction 7.2.5.6.5, D.2.5.6.5
Type V construction 7.2.6
Water drainage from 13.6, 38.6
Wind resistance 38.4

Roof-ceiling assemblies ..... 8.6, 8.9, A.8.9, Table D.2.1.1(a)

Roof coverings .....*see also* Built-up roofing
Asphalt shingles ..... 38.2.1.2(6), 38.5.2.3, 38.9.2, A.38.9.2.5
Ballasted roofs ..... 38.2.1.2(7), 38.4.2.1.1, 38.5.2.3
Classification 38.2, A.38.2.2
Concrete and clay tiles ..... 38.2.1.2(2), 38.4.2.1.1, 38.4.2.2.1, 38.5.2.3, 38.9.4, Table 38.9.4.1, A.38.9.4.5
Definition 3.3.531, 38.1.1.10
Enhanced fire compartments ..... D.2.3.2.13(6)
Fasteners .....*see* Fasteners
Foam plastic insulation ..... 48.3.2.3(3), 48.4.2
Gravel or stone ..... 38.2.1.2(6), 38.4.2, 38.5.2.3
Health care occupancies 19.1.6.2
Historic buildings 15.10.4.3, 15.10.5.4
Impact resistance 38.9.3.7, 38.9.6.7, 38.9.9.9, 38.9.12.7
Liquid-applied coating 38.9.5, A.38.9.5.2
Metal roof panels ..... 38.9.7, A.38.9.7.5 to A.38.9.7.8.2
Definition 38.1.1.6
Metal roof shingles 38.9.8, A.38.9.8.5
Definition 38.1.1.7
Mineral-surfaced roll roofing ..... 38.9.9, A.38.9.9.5 to A.38.9.9.7
Modified bitumen ..... 38.9.6, A.38.9.6.2 to A.38.9.6.5
Reroofing ..... 15.4.2.5, 15.4.2.9(1), 15.4.2.9.3(2)
Single-ply roofing ..... 38.9.12, A.38.9.12.2 to A.38.9.12.6.2
Slate 38.9.10, A.38.9.10.5, A.38.9.10.7
Spray polyurethane foam roofing ..... 38.9.11, A.38.9.11.2 to A.38.9.11.5
Towers 32.14.1.3
Type I and Type II construction ..... 7.2.3.2.13(6), D.2.3.2.13(6)
Underlayment requirements 38.9.2.4, 38.9.4.4, 38.9.7.4, 38.9.8.4, 38.9.9.4, 38.9.10.4, 38.9.13.4, 38.9.14.4
Wind requirements 38.9.2.8, 38.9.3.6, 38.9.4.8, 38.9.6.6, 38.9.7.8, 38.9.8.8, 38.9.9.8, 38.9.11.6, 38.9.12.6, A.38.9.7.8.2, A.38.9.12.6.2
Wood shakes 38.9.14, A.38.9.14.5
Wood shingles 38.9.13, A.38.9.13.5

Roof decks 38.9.2.3, 38.9.3.3, 38.9.4.3, 38.9.5.3, 38.9.6.3, 38.9.7.3, 38.9.8.3, 38.9.9.3, 38.9.10.3, 38.9.11.3, 38.9.12.3, 38.9.13.3, 38.9.14.3
Combustible components, above-deck 38.3.2, A.38.3.2
Enhanced fire compartments D.5.1.2.1, D.5.1.2.2
Fiberboard insulation 45.6.11.6
Live loads ..... 35.7.4, Table A.35.6.1.2
Penetrations 8.2.2.3.3
Reroofing 15.4.2.6
Smoke partitions terminated at ..... 8.10.2(1)
Type IV construction 7.2.5.5.6, 7.2.5.6.2, D.2.5.5.6, D.2.5.6.2

Roof panels .....*see* Light-transmitting plastic; Metal

Roof structures ..... 32.13, Chap. 38
Definition 3.3.601.13
Fire-resistance-rated construction 38.3.1
Fire walls and 8.3.2.14, A.8.3.2.14
Live load ..... 35.7.4, Table A.35.6.1.2
Performance requirements 38.1.2

Rooftop heliports .....*see* Heliports

Rooftop landing pads 31.9.3, 32.15, 35.14.3
Definition 3.3.533

Roof vents, stage 16.4.5.4.2

Rooming houses .....*see* Lodging or rooming houses

Rooms .....*see* Boiler rooms; Gas rooms; Guest rooms; Habitable rooms; Hazardous production material (HPM) rooms; Liquid storage rooms

Rubbish chutes .....*see* Chutes, rubbish and laundry

-S-

Safety 4.1.1, 4.1.3, 15.1.1.1, A.4.1.1, C.1.1
Construction operations .....*see* Construction
From fire .....*see* Fire safety (safety from fire)
From structural failure .....*see* Structural failure, safety from

Safety factors
Definition 3.3.206.4
Performance-based design option 5.7, 5.8.9, A.5.7

Safety margins A.5.7
Definition 3.3.536

Sally ports (security vestibules) 21.2.5.4
Definition 3.3.537

Sanitation 4.1.4.5, A.4.1.4.5.1

Saunas (accessibility) 12.41

Scope of code 1.1, A.1.1

Screens, projection 16.3.3.4

Search and rescue 4.1.3.1.2.2, 5.2.2.5, A.4.1.3.1.2.2, A.5.2.2.5

Seating 11.3.1.3.2
Accessibility ..... 12.6.2.4 Ex. 2, 12.6.2.5 Ex. 3, 12.6.2.6
Lawn 12.21.5
Signs ..... 12.16.1 Ex. 1
Team or player seating ..... 12.6.7.9, 12.21.2.1.4, 12.21.2.3 Ex., 12.21.4 Ex.
Wheelchair spaces 12.6.7.2, 12.21
Festival 16.2.5.4.1
Definition 3.3.538.1, A.3.3.539.1
Folding and telescopic 16.4.8.6.3, 16.4.9, 32.7.8
Definition 3.3.538.2, 32.1.3.2
Grandstands 16.4.8.2
Guards and railings 16.2.11.1, A.16.2.11.1.1
Live loads ..... Table A.35.6.1.2

Copyright National Fire Protection Association
Provided by IHS under license with NFPA
No reproduction or networking permitted without license from IHS
Not for Resale

Smoke-protected assembly ..... 16.2.6(2), 16.4.2, A.16.4.2
Definition 3.3.538.3
Theater-type 16.2.3.2, A.16.2.3.2
Security barriers 12.6.8
Security vestibules (sally ports) 21.2.5.4
Definition 3.3.537
Seismic design categories ..... 15.1.2.2.2, 15.1.2.3.2, 35.4.2.5(6), 35.10.6, 36.1.1, A.15.1.2.2.2, A.15.1.2.3.2; *see also* Earthquake(s)
Definition 3.3.539, 35.2.27
High challenge fire walls 8.3.2.7.2
Quality assurance programs 40.2.3.3, A.40.2.3.3
Steel ..... 44.2.2 to 44.2.4
Seismic forces
Concrete, resistance by 41.5
Definition 3.3.540, 35.2.28
Resisting system ..... 35.4.2.5(7), 35.10.7
Seismic joints ..... *see* Joints
Seismic loads ..... *see* Loads
Seismic reinforcing, masonry heaters 32.12.2
Self-closing (definition) 3.3.541
Self-closing doors ..... 7.4.3.6.8.4, 8.7.3, 8.7.4, 8.10.3.5, 8.15.3, 11.2.1.8, 11.2.1.9.2, 11.2.1.14(5), A.8.7.3, A.11.2.1.8.1
Apartment buildings 25.3.6.3
Elevator lobby doors 11.2.13.4
Health care occupancies ..... 19.1.2.4, 19.3.1.3, 19.3.7.7(2), 20.2.2.2.4
Ambulatory health care occupancies ... 20.3.6.2(3), 20.3.7.7(2)
Horizontal exits 11.2.4.3.9
Hotels and dormitories ..... 24.2.4.2(1), 24.3.6.3
Lodging or rooming houses 23.2.2.1, 23.3.5.7
Projection rooms 16.4.6.4
Reconstruction requirements 15.6.2.1.4.8
Refrigeration machinery room 50.3.1.3
Residential board and care occupancies ..... 26.2.2.3.1, 26.2.3.2.3, 26.2.3.2.4(1), 26.2.3.6.5(3), 26.3.3.7.17, A.26.3.3.7.17
Semiconductor fabrication areas ..... 34.3.7.2.1.3(A)
Smokeproof enclosures ..... 11.2.3.4, 11.2.3.7(1)
Self-closing fire assemblies, shaft opening protectives 15.7.3.6.4
Self-luminous marking/signs 11.10.4, 16.4.7.7.2, 19.2.10.3, A.11.10.4
Definition 3.3.542, A.3.3.542
Self-preservation (day care occupancies) 18.1.1.5, 18.3.5.4, 18.3.7, 18.6.1.1.4, 18.6.1.7
Definition 3.3.543, A.3.3.543
Self-service storage facilities (accessibility) ..... *see* Storage occupancies
Semiconductor fabrication facilities .... 34.3.7, A.34.3.7.3.8.4; *see also* Fabrication area (fab area); Hazardous production material (HPM)
Change of use ..... 15.7.2.1.1(9)
Cleanrooms 6.4.2.11
Sensitivity analysis ..... *see* Analysis
Separate atmosphere ..... *see* Atmosphere
Separated occupancy ..... 6.2.1.1(2), 6.2.4, 16.1.2.1
Apartment buildings 25.1.2.1
Day-care occupancies 18.1.2.1
Definition 3.3.424.13, 6.2.2.3
Detention and correctional occupancies 21.1.2.1
Educational occupancies 17.1.2.1
Enhanced fire compartments D.4.2.3
Height and area requirements 7.4.1.1.2
Hotels and dormitories 24.1.3.1
Industrial occupancies 29.1.2
Mercantile occupancies 27.1.2.1
Residential board and care occupancies 26.1.2.1
Storage occupancies 30.1.2
Stories, allowable area ratio for 7.6.2.3.3, A.7.6.2.3.3
Separation, horizontal ..... *see* Horizontal separation
Serviceability performance, building 5.2.3.2, 5.5.3.1, A.5.2.3.2
Service corridors ... 34.3.7.2.3, 34.3.7.3.1.2, 34.3.7.3.3.2, 34.3.7.3.6.1
Definition 3.3.548
Service entrance (accessibility) ..... *see* Entrances
Service equipment ..... *see* Equipment or fixtures
Service openings ..... 8.12.5, A.8.12.5.2(2)
Severe mobility impairment ..... *see also* Wheelchair
Accessible means of egress 11.5.4.1, A.11.5.4.1
Definition 3.3.550
Doors, width of ..... 11.2.1.2.4(3)
Elevators used as means of egress A.11.2.12.2.4, A.11.2.12.2.6
Evacuation 55.2.3.6.3
Sewer systems ..... *see* Plumbing systems, Discharge
Shafts ..... 8.12.1.4; *see also* Chutes, rubbish and laundry; Elevators, Hoistways; Vertical openings
Definition 3.3.551
Occupancy classification, change in ..... 15.7.3.4.3(2), 15.7.3.4.4(2), 15.7.3.6
Openings into, protection of 15.7.3.6.4
Parking structures ..... 7.4.3.6.5(2)
Penetrations enclosed in ..... 8.8.2.2.1(2)
Pressurization ..... 55.2.5.2(2)
Reconstruction requirements 15.6.2.3
Shall (definition) 3.2.6
Shear walls ..... *see* Walls
Shelves
Dressing, fitting, or locker rooms 12.22.2
Toilet rooms 12.13.3.7
TTYs, for 12.17.5
Shooting facilities with firing positions (accessibility) 12.43, 12.45.16
Should (definition) 3.2.7
Sidelights 8.7.12
Sidewalks
At construction site A.14.1
Flood-resistant construction C.7.5
Structural encroachment into space below 13.3
Signaling systems ..... *see* Alarms and alarm systems
Signs (marking)
Accessibility 12.16
Assistive listening systems 12.16.10
Definition 3.3.553
Pictograms 12.6.2
Aisles 16.2.5.6.10, A.16.2.5.6.10
Areas of refuge 11.2.12.3.5, 11.2.12.3.6
Directional 11.2.2.6.1.5, 11.2.2.6.2, 11.10.2, 11.10.6.2, 12.16.3, 12.16.4.3, 12.16.6, 12.16.8, 12.16.9, A.11.10.2, A.11.10.6.2
Health care occupancies 19.2.10.2
Special amusement buildings 16.4.7.7.4
Doors
Access-controlled egress doors ..... 11.2.1.6.2(4)
Delayed egress locks 11.2.1.6.1, A.11.2.1.6.1.6
Power-operated ..... 11.2.1.9.1.3 to 11.2.1.9.1.5
Electrical 32.6.2
Elevator ..... 11.2.13.11, 11.10.8.4, A.11.10.8.4(1), A.11.10.8.4(2)
Exit discharge 11.7.5
Fire department access roads/fire lanes ... 7.1.5.2.5.7, D.1.5.2.5.7
Hazard identification 4.1.3.3.2.5
Illumination of 11.10.5, 32.6.2, A.11.10.5.1, A.11.10.5.2
Informational 12.16.3
Inspection of ..... 1.7.6.6.3.4(N)(3)
Legend 11.10.3, A.11.10.3
Means of egress ..... 4.1.3.3.2.5, 5.2.4.4, 5.3.2(12), 11.10, 12.16.4, A.11.10.1.2 to A.11.10.8.4(2)
Apartment buildings 25.2.10
Assembly occupancies 16.2.10, 16.4.7.7, A.16.4.7.7.3
Business occupancies 28.2.10
Day-care occupancies 18.2.10
Detention and correctional occupancies 21.2.10
Educational occupancies 17.2.10
Health care occupancies 19.2.10, 20.2.10
Historic buildings 15.10.4.11, 15.10.5.11

Copyright National Fire Protection Association
Provided by IHS under license with NFPA
No reproduction or networking permitted without license from IHS
Not for Resale

Hotels and dormitories 24.2.10
Illumination of 11.10.5, 11.10.8.1, A.11.10.5.1, A.11.10.5.2
Industrial occupancies 29.2.10
Mercantile occupancies 27.2.10
Open structures 31.5.2.8
Parking structures 30.8.2.10
Reconstruction requirements 15.6.2.1.7
Residential board and care occupancies 26.3.2.9
Special signs ..... 11.10.8, A.11.10.8.3 to A.11.10.8.4(2)
Storage occupancies 30.2.10, 30.8.2.10
Towers 31.6.10
Underground structures 31.2.5
Water-surrounded structures 31.7.2.5
No exit 11.10.8.3, A.11.10.8.3
Outdoor 32.6
Performance-based design option 5.2.4.4
Plastic 48.8
Mercantile occupancies, mall 27.4.4.11
Thermal barrier in ..... 48.3.3.4(10)
Public right of way, encroachment into 13.1.1
Rooftop 32.13.5
Stairways 11.2.2.6, 11.7.3, A.11.2.2.6
Tactile 11.2.12.3.6, 11.10.1.3, 12.16.4.1
Temporary ..... 12.16.1 Ex. 3
Single fire source, assumption of 4.2, 5.4.5.4, A.4.2
Single-occupant structures 7.6.2.3.1, 12.3.6
Single-station alarms ..... *see* Alarms
Site (accessibility)
Arrival points, accessible route 12.6.2.1, 12.33.2.5
Construction sites 12.3.2
Definition 3.3.555
Within site, accessible route 12.6.2.2
Site (construction)
Grading for foundation waterproofing 36.8.5
Improvements, flood-resistant construction C.7
Preparation prior to construction 36.2.5
Site class ..... 35.4.2.5(2), 35.10.4
Definition 3.3.556, 35.2.30
SI units 1.6.1
Skylights 8.2.2.3.3, 8.3.2.15, 32.5.6, 32.5.7, 38.11, 46.8, 48.7.3
Industrial occupancies ..... 29.2.9.2(2)
Loads on ..... 38.11.2, 46.10.2, Table A.35.6.1.2
Skywalk bridges 13.8
Definition 3.3.557
Sleepers, wood 7.2.3.2.1, 7.2.3.2.2, 45.6.9.6.5
Slide escapes 11.2.10, 29.2.2.10, A.11.2.10
Slip resistance, walking surfaces 11.1.6.4, A.11.1.6.4
Sloped glazing ..... *see* Glazing
Smoke
Hazard of contents 6.3.1.1
Outside stairs, accumulation on 11.2.2.7.6
Vertical openings, passage through ..... 8.12.1.1(1)
Smoke alarms ..... *see* Alarms and alarm systems
Smoke barriers 8.1.2.2, 8.11, A.8.11.1, A.8.11.2
Accessible means of egress 11.5.4.6
Assembly occupancies 16.4.3.3
Day-care occupancies 18.1.2.2, 18.3.7
Definition 3.3.47.2, A.3.3.47.2
Detention and correctional occupancies ..... 21.3.7, 21.4.4.11, A.21.3.7.1.2 to A.21.3.7.4(1)
Educational occupancies 17.3.7.1
Elevator lobbies 11.2.13.3
Fire barriers used as 8.11.3
Health care occupancies 19.3.6.2, 19.3.7, 20.3.7.4, A.19.3.6.2, A.19.3.7
Occupancy classification, change in ..... 15.7.3.4.3(3)
Reconstruction requirements 15.6.2.4, 15.6.2.7.3
Residential board and care occupancies ..... 26.3.3.7, A.26.3.3.7.10 to A.26.3.3.7.18
Skywalk bridges 13.8.2
Smoke compartments ..... 8.1.2, 15.5.1.3.5, 15.5.2.2.2 to 15.5.2.2.5
Assembly occupancies 16.4.3.3
Day-care occupancies 18.3.7
Definition 3.3.107.2, A.3.3.107.2
Detention and correctional occupancies ..... 21.1.3.1.2 to 21.1.3.1.5, 21.2.4.1(2), 21.2.4.2, 21.3.7, 21.4.4.13.2, A.21.3.7.1.2 to A.21.3.7.4(1), A.21.4.4.13.2(2)
Educational occupancies 17.3.7
Health care occupancies ..... 19.1.1.4.3, 19.2.2.2.7, 19.2.4.3, 19.3.2.6, 19.3.4.3.3.2, 19.3.4.5.3, 19.3.5.3, 19.3.6.1(1), 19.3.7.1.1 to 19.3.7.1.3, 19.4.3.1, 19.4.3.5.2, 19.4.3.5.3, 19.4.3.6, A.19.1.1.4.3, A.19.2.2.2.7, A.19.2.4.3, A.19.3.2.6, A.19.3.4.5.3, A.19.3.5.3, A.19.4.3.1
Ambulatory health care occupancies 20.2.2.2.4, 20.2.4.3, 20.3.6.2, 20.3.7, A.20.3.7.7
Reconstruction requirements 15.6.2.4.1, 15.6.2.5.2.3
Residential board and care occupancies 26.3.3.7.1, 26.3.3.7.6, 26.3.3.7.9
Smoke control systems ..... 55.7, A.55.7.1; *see also* Dampers
Actuation ..... 55.2.5.2(3)
Atriums ..... 8.12.3(6), A.8.12.3(6)
Detention and correctional occupancies ..... 21.4.4.13.2, A.21.4.4.13.2(2)
Door assemblies
Air leakage rate of A.11.2.1.1.4
Smoke 11.2.1.1.4, A.11.2.1.1.4
Ducts and air-transfer openings 8.8.8.5, A.8.8.8.5
Health care occupancies A.19.3.7.3.2
High-rise buildings ..... 33.2.5.5(10), 33.2.6
Mall buildings ..... 27.4.4.5.2.2, 27.4.4.8, A.27.4.4.5.2.2(3), A.27.4.4.5.2.2(7), A.27.4.4.8
Quality assurance 40.6
Roof penetrations for 8.3.2.15
Smoke compartments 16.4.3.3.3, 16.4.3.4
Stages 16.4.5.4.1
Underground structures 31.2.4
Smoke dampers ..... *see* Dampers
Smoke detectors
Assembly occupancies ..... 16.3.6(5), 16.4.3.3.4, 16.4.5.4.1.2(2), 16.4.7.4 to 16.4.7.6
Dampers, closing of 8.10.5.6, 8.11.6.7
Day-care occupancies 18.3.4.2, 18.3.4.5, 18.6.3.4
Definition 3.3.565
Detention and correctional occupancies 21.3.4.3.1.2, 21.3.4.3.2.2, 21.3.4.4, 21.4.4.9.2, 21.4.5.2.3, A.21.3.4.3.1.2, A.21.3.4.4
Educational occupancies ..... 17.3.4.2.3.1(1)
Elevator lobby
Doors, activation of 11.2.13.5
Elevator recall by A.11.2.13.9
Health care occupancies ..... 19.2.5.6.1.3(C)(2), 19.2.5.6.2.1(C), 19.3.4.5.3, 19.3.6.1, A.19.3.4.5.3, A.19.3.6.1(3)
Ambulatory health care occupancies ..... 20.3.7.2(1)
Hotels and dormitories 24.3.4.8
Means of egress and ..... 11.2.1.8.2(5), 11.2.1.10.4(3), 11.2.1.14(5), 11.2.3.4
One- and two-family dwellings 22.3.4.2
Partial coverage system 55.2.2.4
In plenums 7.2.3.2.15.7, D.2.3.2.15.7
Recirculating air or exhaust systems 15.6.2.7.1
Residential board and care occupancies ..... 26.3.3.4.6(2), 26.3.3.4.8
Residential dwelling units 12.45.5.6.1, 12.45.5.6.2
Smokeproof enclosure systems, actuation of 11.2.3.10
Total coverage system 55.2.2.3
Smoke developed index
Definition 3.3.332.2
Plenums 7.2.3.2.15
Smoke development
Foam plastic insulation 48.4.1.4
Interior finishes, tests of 10.3.2, A.10.3.2
Light diffusers in ceilings 48.7.4.2
Light-transmitting plastic ..... 48.7.2(2)
Smoke management systems ..... *see* Smoke control systems

Copyright National Fire Protection Association
Provided by IHS under license with NFPA
No reproduction or networking permitted without license from IHS
Not for Resale

Smoke partitions ..... *see* Partitions
Smokeproof enclosures ..... 11.2.3, 11.9.1.1(5), A.11.2.3.9.1
Apartment buildings 25.2.2.2.5, 25.2.2.4
Area of refuge, exit from 11.2.12.2.4, A.11.2.12.2.4
Assembly occupancies 16.2.2.4
Business occupancies 28.2.2.4
Day-care occupancies 18.2.2.4
Definition 3.3.182.2, A.3.3.182.2
Detention and correctional occupancies 21.2.2.4
Educational occupancies 17.2.2.4
Health care occupancies ..... 19.2.2.4, 19.2.4.2(3)
High-rise buildings ..... 33.1.3.1, 33.2.3.1, 33.2.4.2.4(4)
Hotels and dormitories 24.2.2.4
Industrial occupancies 29.2.2.4, 29.3.2
Mercantile occupancies 27.2.2.4
Parking structures 30.8.2.2.4
Pressurization 11.2.3.2, 11.2.3.9, 11.2.3.10, A.11.2.3.9.1
Reconstruction requirements 15.6.2.3.3.2
Residential board and care occupancies 26.3.2.1.4
Storage occupancies 30.2.2.4
Testing 11.2.3.13
Ventilation systems 11.2.3.2, 11.2.3.7, 11.2.3.8, 11.2.3.10, 11.2.3.12
Smoke-protected assembly seating ..... *see* Seating
Smoke-resistant rated construction 1.7.6.3.1.6
Smoke spread 8.1, A.8.1.2.1
Soil ..... Chap. 36; *see also* Fill
Classification 36.3.1
Excavations 36.2, 36.4.1.2
Expansive 36.3.3
Footings, soil-bearing 36.4
In-situ, inspection and tests of 40.3.5
Investigation and bearing capacity of 36.3
Lateral loads ..... 35.11, Table 36.3.4(b)
Maximum allowable pressures ... Table 36.3.4(a), Table 36.3.4(b)
Presumptive capacities 36.3.4
Soil-gas retarder 49.2.5.3.2, 49.2.5.3.4.2
Solar collectors, light-transmitting plastic covers on 48.7.10
Solid fuel appliances ..... 50.1(4)
Solid masonry units (definition) ..... 3.3.569; *see also* Masonry
Solid material (definition) 3.3.388.14
Solvent extraction plants 6.4.2.59
Soundstage (definition) ..... 3.3.571; *see also* Production studios
Sound transmission 5.3.5.3, 49.4
Space (accessibility)
Definition 3.3.573
Wheelchair space (definition) 3.3.573.1
Spas ..... 32.8, 46.5.2.1(10)
Accessibility 12.42.4, 12.45.15
Definition 3.3.572, 32.1.3.8
Portable (definition) 3.3.573.1, 32.1.3.8.1
Public 32.8.1
Definition 3.3.572.2, 32.1.3.8.2
Residential 32.8.1
Definition 3.3.572.3, 32.1.3.8.3, A.3.3.572.3, A.32.1.3.8.3
Special amusement buildings 6.1.2.1, 16.4.7, A.6.1.2.1, A.16.4.7
Change of use ..... 15.7.2.1.1(8)
Definition 3.3.65.16, A.3.3.65.16
Special construction ..... Chap. 32
Flood resistance 32.1.2
Occupancy classification 6.1.1.2
Special hazard flood areas ..... *see* Flood hazard areas
Special hazard protection 8.15, A.8.15.1
Special industrial explosive devices (SIED) (definition) ... 3.3.160.2, A.3.3.160.2
Special inspections ..... 1.7.6.6.3.4(N), 40.3.1, 40.3.3
Definition 3.3.577, 40.1.3.8
Fire protection systems 55.11
Special operations 6.4
Special-purpose industrial occupancies .... *see* Industrial occupancies
Specifications, building ..... *see also* Input data specification
Design specification (definition) 3.3.580.1, A.3.3.580.1
Spill control, hazardous material ..... 34.3.2.8, 34.3.5.5(7)
Spires ..... *see* Towers
Sports facilities .... *see also* Arenas; Exercise machines and equipment (accessibility); Golf facilities (accessibility); Grandstands; Pools, swimming; Seating
Accessibility ..... 12.6.2.11 to 12.6.2.13, 12.6.2.15, 12.43, 12.45.16
Dressing, fitting, and locker rooms 12.22
Team or player seating ..... 12.6.7.9, 12.21.2.1.4, 12.21.2.3 Ex., 12.21.4 Ex.
Extinguishment requirements ..... 16.3.5.1.3, A.16.3.5.1.3(1)
Glazing 46.7
Live loads ..... Table A.35.6.1.2
Spray application facilities using flammable or combustible materials ..... 6.4.2.60, 15.7.2.4.1(6), 34.1.1.2(1)
Sprayed fire-resistive material 40.5
Definition 3.3.388.15, 40.1.3.9
Spray polyurethane foam roofing . 38.9.11, A.38.9.11.2 to A.38.9.11.5
Sprinklers
Apartment buildings 25.3.5.7, 25.3.5.8
Health care occupancies ..... 19.3.5.2, 19.3.5.3, 19.3.5.5, 19.3.6.1(1), A.19.3.5.3, A.19.3.5.5
Hotels and dormitories 24.3.5.6, 24.3.5.7
Membrane penetration of ..... 8.8.7.1(4), 8.8.7.2(3), 8.11.5.4
Quick-response ..... 19.3.5.3, 19.3.6.1(1), 24.3.5.7, 25.3.5.8, A.19.3.5.3
Residential 19.3.5.3, 24.3.5.7, 25.3.5.8, A.19.3.5.3
Sprinkler systems ..... 55.3, A.55.3.1.1 to A.55.3.2.1
Access-controlled doors ..... 11.2.1.6.2(8)
Additions 15.8.3
Alarm initiation ..... *see* Alarms and alarm systems, Waterflow
Apartment buildings ..... 25.1.2.3(2), 25.2.2.1.2, 25.2.2.10.2, 25.2.4.3, 25.2.5.3.1, 25.2.5.3.2, 25.2.5.4.1, 25.2.5.4.2, 25.2.6.1, 25.2.6.2, 25.2.6.3.2, 25.2.6.4, 25.3.1.1.4, 25.3.2.3, 25.3.4.1.2, 25.3.4.1.3, 25.3.4.2.2, 25.3.4.5.2, 25.3.5.1 to 25.3.5.11, 25.3.6.1, 25.3.6.5, 25.4.2.2, A.25.3.5.1
Areas of refuge 11.2.12.1.2
Assembly occupancies ..... 7.6.3.9, 16.2.6(1), 16.3.1(3), 16.3.4.2.3, 16.3.5.1, 16.3.6(2), 16.4.2.1, 16.4.5.4.1.2(1), A.16.3.4.2.3, A.16.3.5.1.3(1), A.16.4.2.1(3)
Arenas/stadiums 32.3.5.2, 32.3.5.3
Grandstands, spaces underneath 16.4.8.5
Special amusement buildings 16.4.7.2, 16.4.7.3, 16.4.7.6, A.16.4.7.2
Stages 16.4.5.9
Atriums 8.12.3, A.8.12.3
Boiler/furnace rooms 15.6.2.8.1.3
Business occupancies .... 28.2.2.12.2, 28.2.4.5, 28.2.4.6, 28.2.5.2.1, 28.2.5.3.1, 28.2.6.1, 28.3.4.2(3), 28.3.6.1(3)
Communicating space, vertical openings ..... 8.12.2(4), 8.12.2(5)
Corridor door requirements ..... 15.6.2.1.4.3(A)
Day-care occupancies ..... 18.1.5.3, 18.2.5.2, 18.2.5.3, 18.2.6.2(4), 18.2.11.1.2(1), 18.3.2.1(1)(d), 18.3.4.2, 18.3.5.1 to 18.3.5.5, 18.3.6, 18.6.2.6(4)
Dead-end corridors, sprinklered buildings 15.6.2.1.5.3, 15.6.2.1.5.4
Delayed-egress locks, use of 11.2.1.6.1, A.11.2.1.6.1.6
Detention and correctional occupancies 21.3.2.3, 21.3.5.2, 21.3.5.3
Detention and correctional residential housing area .... 21.3.1(2), A.21.3.1(2)
Educational occupancies ..... 7.6.3.7(2), 17.2.5.2 to 17.2.5.4, 17.2.11.1.2(1), 17.3.2.1(1)(d), 17.3.4.2.2, 17.3.4.2.3.2(1), 17.3.5.1 to 17.3.5.5, 17.3.6
Electrically operated 11.2.6.3
Electrically supervised ..... 7.6.3.2 to 7.6.3.4, 7.6.3.7, 7.6.3.7(2), 7.6.3.8, 55.3.2, A.55.3.2.1
Apartment buildings 25.3.6.5
Day-care occupancies 18.3.5.5
Detention and correctional occupancies 21.3.5.3
Educational occupancies 17.3.5.5
Health care occupancies ..... 19.3.5.4, 19.3.7.1.6(4), 20.3.5.2

--`,,```,,,,````-`-`,,`,,`,`,,`---
Copyright National Fire Protection Association
Provided by IHS under license with NFPA
No reproduction or networking permitted without license from IHS
Not for Resale

High-rise buildings 33.1.3.1, 33.2.2, A.33.2.2
Hotels and dormitories 24.3.5.5
Lodging or rooming houses 23.2.1.4
Reconstruction requirements 15.6.2.5.4
Residential board and care occupancies ..... 26.2.3.5.3, 26.2.3.5.4(2), 26.3.3.5.3
Enhanced fire compartments ..... D.2.3.2.15.3, D.4.3.3.2 to D.4.3.3.4, D.4.3.3.7, D.4.3.3.8, D.4.3.3.9
Escalators or moving walks ..... 8.12.5.2(2), 8.12.5.3
Exit discharge, level of 11.7.2.3
Exit enclosures ..... 11.1.3.2.1.6(5), 11.5.4.2.2
Exit passageways 11.2.6.3
Exits, distance between 11.5.1.4.3
Exterior walls, unprotected openings in ..... 7.3.5.5(1)
Fire alarm zones ..... 55.2.8.4 to 55.2.8.6
Fire department access and 7.1.5.2.3.2
Floor areas, increases in ..... 7.6.2, A.7.6.2.1 to A.7.6.2.3.4.2
Health care occupancies ..... Table 11.3.3.1, 19.1.1.4.3, 19.2.2.2.7, 19.3.2.6(7), 19.3.5.1, 19.3.7.3.2, A.19.1.1.4.3, A.19.2.2.2.7, A.19.3.5.1, A.19.3.7.3.2
Ambulatory health care occupancies ..... 20.3.5.1 to 20.3.5.3, 20.3.6.1(2), 20.3.6.2, 20.3.6.3.2, 20.3.7.2(2)
Height and area requirements, sprinklered buildings ..... 7.4.1, Table 7.4.1, A.7.4.1.3.7
High hazard contents 34.3.2.1
High-rise buildings ... 33.1.3.1, 33.2.2, 33.2.5.5(6), 55.3.1.6, A.33.2.2
Historic buildings 15.10.4.7, 15.10.4.12, 15.10.5.8.2
Horizontal exits, fire barriers forming ..... 11.2.4.3.4(1)
Hotels and dormitories ..... 24.2.2.1.2, 24.2.2.12.2, 24.2.4.2, 24.2.5.3, 24.2.5.4, 24.2.5.6, 24.2.5.7, 24.2.6.1, 24.2.6.2, 24.2.6.3.3(1), 24.3.1.1.3, 24.3.2.4, 24.3.4.2(3), 24.3.4.8, 24.3.5.1 to 24.3.5.9, 24.3.6.2, 24.3.6.5(2), 24.3.7.2, A.24.3.5.1
Industrial occupancies ... Table 29.2.5.1, Table 29.2.6, 29.3.4.2(3), 29.3.5.1, 29.4.2, A.29.3.5.1.3
Interior finishes, use of ..... 10.4.1(1), 10.4.2(1), 10.7
Light diffusers, use of ..... 48.7.4.2(1), 48.7.5.2
Light-transmitting plastic, use of ..... 48.7.6.6, 48.7.7.2(3), 48.7.8.4.2(1)
Limited-access structures 31.3.1.3
Lodging or rooming houses 23.2.1.4, 23.3.1.2, 23.3.1.3, 23.3.4.2, 23.3.5.7, 23.3.6, A.23.3.6.1, A.23.3.6.2
Mercantile occupancies ..... 27.2.2.2.5, 27.2.2.12.2, 27.2.4, 27.2.5.2.1, 27.2.5.3(2), 27.2.5.8, 27.2.6.2, 27.2.7.2, 27.3.1, 27.3.4.2(3), 27.3.5.1, 27.3.5.2, 27.3.6.1(3), A.27.2.7.2
Bulk merchandising retail buildings 27.4.5.4.2, 27.4.5.5
Mall buildings ..... 27.4.4.2.2, 27.4.4.5.2.2, 27.4.4.5.9.2(2), 27.4.4.7.1, A.27.4.4.2.2, A.27.4.4.5.2.2(3), A.27.4.4.5.2.2(7)
Storage areas 27.3.2.1.2
Motion picture theaters 7.6.3.8
Occupancy classification, change of 15.7.3.7, 15.7.3.9.3.5, A.15.7.3.7.3
One- and two-family dwellings 22.2.2.5, 22.3.5, A.22.3.5
Parapet wall requirement ..... 37.1.3.1(4)
Permits 1.7.6.1.1.2
Piers ..... 31.8.2.2(4)
Piping, in plenums 7.2.3.2.15.1
Plans 1.7.6.3.1.4
Reconstruction requirements 15.6.2.5
Residential 7.5.2, 15.6.2.5.4.6
Residential board and care occupancies ..... 7.4.1.3.3, 26.2.2.3.6, 26.2.2.3.7, 26.2.3.2.3(2), 26.2.3.2.4(2), 26.2.3.5, 26.2.3.6.5(3), 26.3.3.4.2(3), 26.3.3.5.1, 26.3.3.5.3, A.26.2.3.5.1, A.26.2.3.5.2.2, A.26.3.3.5.1
Revolving doors ..... 11.2.1.10.4(2)
Roofing, concealed spaces under ..... 15.4.2.9.1(2)
Semiconductor fabrication areas 34.3.7.3.8, A.34.3.7.3.8.4
Skylights 48.7.3.6, 48.7.3.7.2
Smokeproof enclosures ..... 11.2.3.9.1, 11.2.3.9.2(3), 11.2.3.10.2(1), A.11.2.3.9.1
Stairways, unenclosed 15.7.3.6.2.2
Standpipe systems in combination with 55.4.3
Storage occupancies ..... Table 30.2.5, Table 30.2.6, 30.3.4.1(3), 30.3.5.1 to 30.3.5.3, 30.4.2, Table 30.7.5.2
Parking structures ..... 7.4.3.6.5(4), 27.1.2.2.2, 30.8.3.4.1(3), 30.8.3.4.2(3), 30.8.3.5.1 to 30.8.3.5.3
Towers ..... 11.2.13.1(1), 31.6.1.1, A.31.6.1.1(3)
Underground structures 31.2.1
Unlimited area buildings ..... 7.6.3.2, 7.6.3.3(1), 7.6.3.4, 7.6.3.7(2), 7.6.3.8, 7.6.3.9
Stadiums ..... *see* Arenas; Assembly occupancies; Grandstands
Staff
Assistance, provision for 5.4.3.6, A.5.4.3.6
Business occupancies ..... 28.3.4.3.1(2)
Day-care occupancies 18.2.2.2.7, 18.6.1.7
Detention and correctional occupancies ..... 21.1.1.5, 21.1.2.2.1, 21.1.3.1.5, 21.1.3.2, 21.3.4.2, 21.3.4.3.2.3, 21.4.4.6.2, 21.4.5.1.4, 21.4.5.2.4(3), A.21.1.3.2
Health care occupancies ..... 19.1.1.3, 19.3.6.1, 20.1.2.5, A.19.3.6.1(3)
Mercantile occupancies ..... 27.3.4.3.1(2)
Bulk merchandising retail buildings ..... 27.4.5.4.3(2)
Malls ..... 27.4.4.10.3.1(2)
Notification, evacuation 55.2.3.6.3
Residential board and care A.15.7.3.7.3
Definition 3.3.581
Stages ..... 7.6.3.9(1), 16.4.5, A.16.4.5.10
Change of use ..... 15.7.2.1.1(7)
Definition 3.3.582
Educational occupancies 17.3.2.4
Fire protection 16.4.5.9
Floor live load ..... 35.6.3.3, Table A.35.6.1.2
Guards 11.1.8.2
Legitimate 16.4.5.2.2, 16.4.5.4, 16.4.5.5
Definition 3.3.582.1
Proscenium walls and curtains 16.4.5.5, 16.4.5.6
Regular 16.4.5.2.1, 16.4.5.4
Definition 3.3.582.2
Stairways ..... 16.2.2.3.1(2)
Ventilators 16.4.5.4
Stair descent device ..... 11.2.12.2.3(2), A.11.2.12.2.3(2)
Definition 3.3.160.3, A.3.3.160.3
Stairways ..... 11.2.2, 11.7.4, 11.8.1.1, 11.9.1.2, A.11.2.2.2.1.1 to A.11.2.2.7.5, A.11.8.1.1; *see also* Outside stairs
Accessibility 11.5.4.4, 12.10
Swimming pools, wading pools, and spas 12.45.15.6
Apartment buildings ..... 25.2.2.3, 25.2.3.2, 25.2.4.2, 25.2.4.3, 25.3.4.1.1, 25.3.4.1.3(2)
Area of refuge, exit from 11.2.12.2.3, A.11.2.12.2.3
Assembly occupancies ..... 16.2.2.3.2.2, 16.2.3.3.3, 16.2.4.6, 16.2.7.3(3), 16.3.1(1), 16.3.1(2), 16.3.3.2
Aisles serving seating not at tables ..... 16.2.5.6.4 to 16.2.5.6.9, A.16.2.5.6.4 to A.16.2.5.6.9
Smoke-protected seating 16.4.2.3
Theater-type seating 16.2.3.2, A.16.2.3.2
Building rehabilitation
Modifications, electrical systems 15.5.5.4.3.5
Occupancy classification, change of ..... 15.7.3.5.1.1, 15.7.3.5.1.2(C), 15.7.3.6.2
Reconstruction 15.6.1.3.3
Business occupancies 28.2.1.3.1, 28.2.1.3.2, 28.2.2.3, 28.2.4.3, 28.3.1.1.2
Change in levels of means of egress 11.1.7.2, A.11.1.7.2
Curved 11.2.2.2.2
Day-care occupancies . 18.2.2.3, 18.2.9(1), 18.3.3.2(1), 18.6.3.3.2.1
Definition 3.3.584
Demolition operations A.14.1
Detention and correctional occupancies 21.2.2.3, 21.2.11.9
Dimensional criteria 11.2.2.2, A.11.2.2.2.1.1, A.11.2.2.2.4
Door at top of 11.2.1.3.7, 11.2.2.3.2.5
Educational occupancies 17.2.2.3

Copyright National Fire Protection Association
Provided by IHS under license with NFPA
No reproduction or networking permitted without license from IHS
Not for Resale

Enclosures ..... 11.2.2.5, 27.4.4.5.9.2(4), 29.6.3.2, A.11.2.2.5.2, A.11.2.2.5.3.1
Alarm notification 55.2.3.5.3, 55.2.3.6.5
Doors in ..... 11.2.1.5.8, 11.2.1.5.9, 11.2.1.8.2(5), 19.2.2.2.8, 19.3.1.3, 19.3.1.4, 20.2.2.2.5, 21.2.11.9, 27.2.2.2.7, 33.2.3.2, 33.2.5.5(5), A.11.2.1.5.8
High-rise buildings 33.2.3
Historic buildings 15.10.4.8
Interior finish 16.3.3.2
Lodging or rooming houses 23.2.2.1, 23.2.2.3, 23.3.1.3
Occupancy classification, change of 15.7.3.6.2
Outside stairs 11.2.2.7.3
Residential board and care occupancies 26.2.2.3.1
Storage occupancies ..... 30.6.3(2), 30.7.2.3
Underground structures 31.2.5
Usable space 11.2.2.5.3, A.11.2.2.5.3.1
Existing building, alteration to 12.6.2.3.2
Exit passageway as discharge 11.2.6.4
Fire escape stairs 11.2.8, A.11.2.8
Glazing adjacent to ..... 46.5.2.1(11), 46.5.2.1(12), 46.5.2.2(4)
Guards ..... *see* Guards
Handrails ..... *see* Handrails
Headroom 11.1.5.4
Health care occupancies ..... 19.2.2.3, 19.2.4.2(2), 20.2.2.2.5
High-rise buildings 33.2.3
Historic buildings 15.10.4.4, 15.10.4.8, 15.10.4.10, 15.10.5.5, 15.10.5.10, 15.10.5.12
Hotels and dormitories 24.2.2.3, 24.2.3.2, 24.2.4.2, 24.2.7.2, A.24.2.7.2
Industrial occupancies 29.2.2.3, 29.2.2.9.1, 29.2.5.3, 29.6.3.2
Inspection ..... 1.7.6.6.3.4(N)(4)
Interlocking/scissor 11.5.1.5, A.11.5.1.5
Light diffusers in ceilings 48.7.4.1, A.48.7.4.1
Live load ..... Table A.35.6.1.2
Lodging or rooming houses 23.2.1.2, 23.2.1.3, 23.2.2, 23.3.1.3, 23.3.2
Marking 11.2.2.6, 11.7.3, A.11.2.2.6
Mercantile occupancies ..... 27.2.1.2, 27.2.1.3, 27.2.2.3, 27.2.3.2, 27.4.4.5.9.2(4)
Occupancy classification, change of ..... 15.7.3.5.1.1, 15.7.3.5.1.2(C), 15.7.3.6.2
One- and two-family dwellings 22.2.2.2, 22.2.2.4.1, 22.2.5, 22.2.7.2
Outside ..... *see* Outside stairs
Performance-based design option ..... 5.3.2(4)
Pressurization ..... 11.1.3.2.1.6(3), 55.2.5.2(2)
Quality assurance for 40.7
Residential board and care occupancies ..... 26.2.2.1.2, 26.2.2.2(1), 26.2.2.3, 26.2.2.5, 26.2.3.1.4, 26.3.2.1.3, A.26.2.2.5.2
Risers 11.2.2.3.5, 11.2.2.3.6, 15.6.1.3.3, A.11.2.2.3.5
Aisles 16.2.5.6.7
Smoke-protected seating 16.4.2.3
Roof access 4.6.3
Smokeproof enclosures ..... 11.9.1.1(5)
Spiral 11.2.2.2.3, 30.2.2.3.2
Apartment buildings 25.2.2.3.2
Business occupancies 28.2.2.3.2
Detention and correctional occupancies 21.2.2.3.2
Industrial occupancies 29.2.2.3.2
Mercantile occupancies 27.2.2.3.2
One- and two-family dwellings 22.2.5.3
Storage occupancies ..... 30.2.2.3, 30.2.2.8.1, 30.6.3(2), 30.7.2.1, 30.7.2.2, 30.7.2.3
Parking structures ..... 7.4.3.6.5(2), 30.8.2.2.3
Towers 31.6.11.1.2
Travel distance to exits, measurement of 11.6.3, A.11.6.3
Treads ..... 11.2.2.3.3 to 11.2.2.3.6, 15.6.1.3.3, A.11.2.2.3.3.2 to A.11.2.2.3.5
Aisles ..... 16.2.5.6.6, 16.2.5.6.8, A.16.2.5.6.6(3)
Catwalks, galleries, and gridirons 16.2.2.3.2.1
Detention and correctional occupancies ..... 21.2.2.3.1(2)
Industrial occupancies ..... 29.2.2.3.1(1)
Slip resistance A.11.1.6.4, A.11.2.2.3.4
Storage occupancies ..... 30.2.2.3.1(1)
Type IV construction 7.2.5.6.6, D.2.5.6.6
Winders 11.2.2.2.4, 22.2.5.3, 25.2.2.3.3, A.11.2.2.2.4
Stakeholders (definition) 3.3.585
Standby power ..... 11.9.1.1(5)
Elevators 54.5.2
High hazard contents area 34.3.2.7
High-rise buildings 33.2.4.2, A.33.2.4.2
Smoke compartments 16.4.3.4
Smokeproof enclosures 11.2.3.12
Standpipe systems 55.4
Apartment buildings 25.3.5.12
Assembly occupancies 16.3.5.2
Stages 16.4.5.10, A.16.4.5.10
Business occupancies 28.3.5.2
Day-care occupancies 18.3.5.6
Definition 3.3.608.9
Detention and correctional occupancies 21.3.5.5, 21.4.4.10
Educational occupancies 17.3.5.6
Exit enclosure penetrations ..... 11.1.3.2.1.6(6)
Health care occupancies 19.3.5.6, 20.3.5.4
Hotels and dormitories 24.3.5.10
Industrial occupancies 29.3.5.2
Mercantile occupancies 27.3.5.4
Reconstruction requirements 15.6.2.5.5
Residential board and care occupancies 26.3.3.9
Storage occupancies 30.3.5.4
Parking structures 30.8.3.5.4
Staples 45.5.17, 45.6.8.5
Start of construction (flood resistance)
Actual (definition) 3.3.115.1.1, 39.2.20.1, A.39.20.20.1
Definition 3.3.115.1, 39.2.20
Steamrooms (accessibility) 12.41
Steel ..... Chap. 44
Cable structures 44.4
Cold-formed 44.6
Framing 44.7
Composite slabs on steel decks 44.6.2
Deflection limits, structural members 35.1.2.8.3
Floors 7.2.5.6.4
Gypsum board, support for 47.2.1.5.1
Identification for structures 44.1.2
Inspection ..... 1.7.6.6.3.4(B), 1.7.6.6.3.4(I)
Joists 44.3
Piles 36.5.7
Quality assurance programs 40.3.10
Seismic construction requirements ..... 44.2.2 to 44.2.4, 44.4.2
Storage racks 44.5
Structural steel construction ..... 1.7.6.6.3.4(I), 44.2
Towers 32.14.1.2
Stop-work orders 1.7.7.1
Storage
Accessibility of storage elements 12.45.7
At construction sites A.14.1
Material ..... Table 34.1.3.1
Definition ..... 3.3.588; *see also* Hazardous materials
High-piled storage
Definition 3.3.589.1
Outside storage, hazardous materials 34.2.5
Rack storage 7.4.3.6.4, 44.5, D.6.3
Storage areas/rooms
Apartment buildings ..... Table 25.3.2.2
Business occupancies 28.2.1.4, 28.3.1.2, 28.3.2.1, A.28.3.2.1
Detention and correctional occupancies ..... Table 21.4.4.7
Detention and correctional residential housing area ..... Table 21.3.2.1
Floors, high hazard contents areas 34.3.2.9
Hazardous production materials 34.3.7.2.4
Health care occupancies ..... Table 19.3.2.1
Hotels and dormitories ..... Table 24.3.2.3

Copyright National Fire Protection Association
Provided by IHS under license with NFPA
No reproduction or networking permitted without license from IHS
Not for Resale

Liquids, flammable/combustible .....*see* Liquid storage rooms
Mercantile occupancies 27.1.3.2.2, 27.2.5.8, 27.3.2.1, 27.4.5.3, A.27.3.2.1
Residential board and care occupancies ..... Table 26.3.3.2.2
Storage occupancies ..... Chap. 30; *see also* Aircraft hangars; Bulk storage elevators; Parking structures
Accessibility 12.25, 12.45.7, 30.1.7
Building services 30.5, 30.8.5, 49.2.2.3
Bulk storage of tires 30.3.5.2
Change of use requirements ..... 15.7.2.4.1(5)
Cold storage ..... 48.3.2.3(2), 48.4.1.1.3; *see also* Refrigerating equipment
Definition 3.3.424.14, 6.1.13.1, A.3.3.424.14, A.6.1.13.1
Doors 11.2.1.4.1.6
Energy efficiency ..... 51.2.2(1)
Flood-resistant construction ..... 39.11.1.2.1(8)
General requirements ..... 30.1, 34.1.3.3, Table 34.3.2.3, A.30.1.1.1, A.30.1.6
Guards, loads on 35.6.5.2
Height and area requirements ..... Table 7.4.1, 7.4.3.6.4, Table 15.7.3.8.1.1
High hazard contents .....*see* High hazard contents
High-rise buildings 30.4.2
Incidental storage ..... 30.1.3.1(2)
Live loads ..... Table A.35.6.1.2
Means of egress 30.2, 30.6, 30.7.2, 30.7.3, 30.7.5, 30.8.2, A.30.2.1, A.30.2.2.5.2, A.30.6
Means of escape 30.2.2.8, 30.2.2.9, 30.7.2.2, 30.7.3, 30.7.5
Mini-storage of tires 30.3.5.3
Multiple occupancy ..... 6.2.1.3(1), 30.1.2
Occupancy category for wind, snow, and earthquake ..... Table 35.3.1
Occupancy classification 30.1.3, 30.8.1.4
Change of ..... Table 15.7.3.5.1.1, Table 15.7.3.8.1.1, Table 15.7.3.9.1.1
Occupant load ..... Table 11.3.1.2, 30.1.3.2, 30.1.6, 30.2.4.2, 30.8.2.4.2, A.30.1.6
Parking structures 30.8.5
Protection 30.3, 30.8.3, A.30.3.5
Rehabilitation of 30.1.1.2
Change of occupancy classification ..... Table 15.7.3.5.1.1, Table 15.7.3.8.1.1, Table 15.7.3.9.1.1
Self-service facilities (accessibility) ..... 12.6.4.5 Ex., 12.25.3
Definition 3.3.204.9
Separated occupancies, fire-resistant rated separations for ..... Table 6.2.4.1(b)
Special operations, requirements for 6.4, D.7.4
Underground spaces 30.7.5
Unlimited area buildings 7.6.3.1, 7.6.3.3
Storm drainage C.7.4
Story
Accessibility
Definition 3.3.590.1
Multi-story buildings ..... 12.6.2.3, 12.6.2.4 Ex. 3, 12.33.2.2.3
Attic .....*see* Attics
Building height requirements .....*see* Building height
Capacity of means of egress 11.3.1.1
Definition 3.3.590
Exits serving more than one story 11.3.1.4, 11.5.4.7
First story above grade
Definition 3.3.590.2
Parking structures, use as 7.4.3.6.5
Height (definition) 3.3.308.2
Maximum allowable area per story 7.6.2.3, A.7.6.2.3
Number of means of egress from 11.4.1.1, 11.4.1.2, 11.4.1.4
Number of stories
Building height and 7.4.3, A.7.4.3.6.3
Definition 3.3.590.3, A.3.3.590.3
Detention and correctional occupancies 15.7.3.8.3
Mezzanines 8.13.1.1
Occupiable (definition) 3.3.590.4, A.3.3.590.4
Street floor .....*see* Floors
Streets .....*see also* Public ways
Construction site A.14.1
Definition 3.3.592
Flood-resistant construction C.7.5
Skywalk bridges, access from 13.8.7
Strength
Nominal (definition) 3.3.594.2, 35.2.30.1
Required (definition) 3.3.594.3, 35.2.30.2
Strength design .....*see* Design
Structural design ..... Chap. 35
Building rehabilitation .....*see* Building rehabilitation
Construction documents 35.4
General structural integrity 35.1.2.4
Grandstands and bleachers 32.7.4, 32.7.8.2
Indoor winter design comfort conditions 49.7
Life safety compliance options 4.3
Masonry structures 43.3
Methods 35.1.2.1
Occupancy categories 35.3
Smoke control systems 55.7.2
Wood, requirements for 45.4, A.45.4.1.1
Structural elements .....*see also* Construction types; specific elements
Additions, effect of 15.8.4.2
Definition 3.3.174.3
Deflection limits 35.1.2.8, A.35.1.2.8.8
Demolition operations A.14.1
Enhanced fire compartments D.2.3.1, D.2.4.1, D.2.5.1, D.2.5.6, D.2.6, D.2.7
Fire resistance rating requirements ..... 7.2.7; *see also* Fire-resistance-rated construction
Inspections of ..... 1.7.6.6.3.4, A.1.7.6.6.3.4(C)
Integrity of 4.4.8
One- and two-family dwellings 22.4.6
Renovations 15.4.3
Type V construction 7.2.6
Wood, size of 45.6.3
Structural evaluation 15.1.5, 15.4.3.2
Structural failure, safety from .... 4.1.3.2, A.4.1.3.2.1 to A.4.1.3.2.2.2
Fire walls, strength and stability of 8.3.2.2
Performance-based design option ..... 5.2.2.3, 5.2.2.5, 5.2.3, 5.5.3.3, A.5.2.2.5, A.5.2.3.1 to A.5.2.3.4
Structural frame
Accessibility (definition) 3.3.597.1
Definition 3.3.597
Structural glued laminated timber 45.5.6, 45.6.9.6.9
Definition 3.3.598, 45.2.7
Structurally unsafe (definition) A.3.3.600
Structural observation 40.3.1, 40.3.2
Definition 3.3.599, 40.1.3.10
Structural units, inspection of 1.7.6.6.2
Structures .....*see also* Building(s); specific types of structures
Definition 3.3.602, 35.2.32, A.3.3.602
Encroachments into public right of way ..... Chap. 13
Flood resistance .....*see also* Flood-resistant construction
Definition 3.3.601.1, 39.2.21
Other (definition) 3.3.601.11, 35.2.32.1
Permanent (definition) 3.3.601.12
Temporary .....*see* Temporary facilities
Subdivisions
Real estate, in flood hazard areas C.6
Structural .....*see* Building spaces, subdivision of
Sub-membrane depressurization system .....*see* Depressurization system
Substantial damage 15.9.3.3.1, A.15.8.3.3.1
Flood resistance 15.9.3.3.1.2, A.15.9.3.3.1
Definition 3.3.603, 39.2.22
Substantial improvement (flood resistance) (definition) 3.3.604, 39.2.23
Suites
Guest .....*see* Guest suites
Health care occupancies
Definition 3.3.605.2

Copyright National Fire Protection Association
Provided by IHS under license with NFPA
No reproduction or networking permitted without license from IHS
Not for Resale

Means of egress ..... 19.2.5.5.4, 19.2.5.6, A.19.2.5.6.1.3(A)
Non-sleeping ..... 19.2.5.6.3, A.19.2.5.6.3.1 to A.19.2.5.6.3.2(C)
Definition 3.3.605.2.1
Sleeping ..... 19.2.5.6.2, A.19.2.5.6.2.1(A) to A.19.2.5.6.2.2(C)
Definition 3.3.605.2.2
Sulfur processing facilities 6.4.2.62
Surfaces .....*see also* Weather-exposed surfaces
Dining and work surfaces, accessibility of 12.26
Exterior surfaces (definition) 3.3.606.1
Fire apparatus access roads 7.1.5.2.5.2, D.1.5.2.5.2
Interior surfaces (definition) 3.3.606.2, 47.1.5.9.1
Stair tread and landings 11.2.2.3.3, A.11.2.2.3.3.2
Walking surfaces, means of egress 11.1.6, A.11.1.6.4
Surface water entry 4.1.4.2, 5.2.5
Surveyor's certificate 1.7.6.2.2, 1.7.6.2.3
Swimming pools .....*see* Pools
Systems .....*see also* specific systems
Design/installation 4.4.6

-T-

Tactile (accessibility)
Definition 3.3.609
Signs/marking 11.2.12.3.6, 11.10.1.3, 12.16.4.1
Tanks
Definition 3.3.610
Flood-resistant construction ..... 35.12.3(2), C.1.5.1, C.2.1, C.8
Occupancy category for wind, snow, and earthquake ..... Table 35.3.1
Technically infeasible
Accessibility ..... 12.2.3 Ex. 2, 12.13.2.1 Ex. 1
Definition 3.3.611.1
Building rehabilitation 15.1.2.3.1
Definition 3.3.611
Telephones (accessibility) 12.17
Guest rooms 12.45.3.3.2
Television masts 32.14.2
Television production facilities .....*see* Production studios
Temporary
Certificate of occupancy 1.7.6.7.3
Definition 3.3.612, 32.1.3.10
Light and power 14.4
Recreational vehicles, placement of C.9.1
Temporary facilities 32.10
Accessibility 12.1.3
Assembly occupancies ..... 16.4.1.2(5), 16.4.7.3
Construction site, sanitary facilities at A.14.1
Definition 3.3.204.10, 3.3.601.14, 35.2.13.2
Flood hazard areas, permits for structures in 1.7.6.1.1.3, 39.15
Membrane structures .....*see* Membrane structures
Occupancy category for wind, snow, and earthquake ..... Table 35.3.1
Temporary platforms 16.4.5.1
Definition 3.3.474.1
Tenant spaces
Business occupancies ..... 28.2.2.2.6, 28.2.4.6, 28.2.5.3.2, 28.3.1.1.2, 28.3.6.1(2), 28.3.7.1
Entrances to 12.6.4.5, 27.2.2.2.6, 28.2.2.2.6
Mercantile occupancies ..... 27.1.3.2.4, 27.2.2.2.6, 27.4.4.3.5, 27.4.4.5.2.1, 27.4.4.5.2.2, 27.4.4.5.7, 27.4.4.5.8, 27.4.4.5.9.1(2), 27.4.4.7.1.2, A.27.4.4.5.2.2(3), A.27.4.4.5.2.2(7)
Multitenant buildings, construction in 1.7.6.3.5.2
Reconstruction ..... 15.6.2.2.2.1(B)
Tenant improvements or repairs, construction documents for 1.7.6.3.1.5
Tensioned-membrane structures 32.2.1.1, 32.2.3, 32.2.5.3, A.32.2.3.2, A.32.2.5.3
Definition 3.3.601.15, 32.1.3.9.4
Tents 32.3
Definition 3.3.617, 32.1.3.11, A.3.3.617, A.32.1.3.11
Grandstands in ..... 16.4.8.3.5, 32.7.5.3(2)
Private party (definition) 3.3.617.1, 32.1.3.11.1
Terminals ..... A.6.1.2.1(17); *see also* Airport terminal buildings; Marine terminals; Motor freight terminals
Tests 4.5.8
Of compliance to code 1.5.3
Documentation 55.11.3, 55.11.4
Emergency command center, high-rise buildings 33.2.5.6
Of equivalency to code 1.5.3
Fill, use of 36.2.4.3.1
Foam plastic insulation 48.3.2, 48.4.1.4, 48.4.1.5, 48.4.1.8.1, 48.4.1.8.2, 48.4.4, A.48.3.2.1
Glazing, for human impact loads 46.5.1
Gypsum concrete, reinforced 41.8.3
Light-transmitting plastic ..... 48.7.2(2)
Membrane materials 32.2.2.1, 32.2.2.4
Metal composite material (MCM) ..... 37.4.4.1(2), 37.4.4.2
Pools 32.8.3.5
Proscenium curtain 16.4.5.6.2.4, 16.4.5.6.2.5
Roof assemblies 38.9.12.6.1
Hail resistance 38.5.2
Wind resistance 38.4.1.2
Roof coverings, exterior fire exposure 38.2.1
Smoke control systems 40.6.1.1, 40.6.1.2, 55.7.2, 55.7.4
Soil 36.3
Sprayed fire-resistive material 40.5.1.2, 40.5.4.2
Structural components and assemblies quality assurance ... 40.3.1, 40.3.3, 40.3.4.2.2, 40.3.5 to 40.3.11
System verification 55.11.1
Tent fabric 32.3.3
Thermal barriers 48.3.3.2
Wall finish systems 40.4.1.2
Theaters .....*see also* Motion picture theaters
Change of use requirements ..... 15.7.2.4.1(9)
Fire alarm systems 16.3.4.1
Live loads ..... Table A.35.6.1.2
Performance areas 12.6.2.6
Waiting spaces 16.1.6.1
Thermal barriers ..... 37.4.4(3), 37.4.4.1, 48.3.3, 48.4.1.3, 48.4.1.8.3(1)
Definition 3.3.47.3, A.3.3.47.3
Thermoplastic material 8.16.3.2.2
Definition 3.3.388.16, 48.2.3.1, A.3.3.389.16
Roof coverings ..... Table 38.9.3.1, Table 38.9.12.1
Thermoset material ..... Table 38.9.12.1
Definition 3.3.388.17, 48.2.3.2, A.3.3.388.17
Through-penetration .....*see* Penetrations
Timber ...*see also* Lumber; Structural glued laminated timber; Wood
Heavy timber structural elements 7.2.3.2.10
Enhanced fire compartments D.2.3.2.10, D.2.4.2.2, D.2.5.2
Grandstands 32.7.5.4
Type III construction 7.2.4.2.2, D.2.4.2.2
Type IV construction 7.2.5.2, 7.2.5.6.1, 7.2.5.6.4, D.2.5.2
Tires, bulk storage of 30.3.5.2
Titanium production and processing facilities 6.4.2.63
Toilet compartments 12.13.3.1
Toilet rooms 12.13, 12.44.3
Detention and correctional occupancies 12.45.4.2.3
Guest rooms 12.45.3.2.4, 12.45.3.2.5
Health care occupancies ..... 12.23 Ex., 12.45.2.4, 19.3.6.3.1.3, 19.3.6.4.2
Historic buildings ..... 12.2.5 Ex.
Residential dwelling units 12.45.5.5
Signs 12.16.8
Unisex ..... 12.13.2.1 Ex., 12.13.2.2
Toilets, portable ..... 12.3.2, 12.13.2.1 Ex. 3
Towers ..... 31.6, 32.14, A.31.6.1.1(3); *see also* Airport traffic control towers
Definition 3.3.623
Elevators in 11.2.13, A.11.2.13
Enhanced fire compartments D.4.3.1
Height requirements 7.4.3.6.1

--`,,```,,,,````-`-`,,`,,`,`,,`---

Copyright National Fire Protection Association
Provided by IHS under license with NFPA
No reproduction or networking permitted without license from IHS
Not for Resale

Means of egress ..... 11.2.9.1(2), 11.2.11.1(2), 31.6.2 to 31.6.11, 31.6.11.1.1, 31.6.11.1.2
Protection ..... 31.6.1.1, 31.6.11, A.31.6.1.1(3)
Townhouses 25.1.1.3, A.22.1.1.2
Definition 3.3.624
Roof covering classification ..... 38.2.2(1)
Separation between ..... 22.4, 25.1.1.3(1)
Toxic material ..... 6.3.2.4.5(3), Table 34.1.3.1, Tables 34.1.3.2(a) to (h)
Definition 3.3.388.18
Floors, high hazard contents storage rooms 34.3.2.9
Highly toxic ..... 6.3.2.4.5(2), Table 34.1.3.1, Tables 34.1.3.2(a) to (h), 34.3.6.2, Table 35.3.1
Definition 3.3.388.18.1, A.3.3.388.18.1
Floors, high hazard contents storage rooms 34.3.2.9
Semiconductor manufacturing operations ..... Table 34.3.7.2.1.2(A), Table 34.3.7.2.4.6
Ventilation 34.3.2.5.1
Occupancy category for wind, snow, and earthquake ..... Table 35.3.1
Semiconductor manufacturing operations ... Table 34.3.7.2.1.2(A), Table 34.3.7.2.4.6
Ventilation of ..... 49.2.2.1.4 to 49.2.2.1.8
Transfer grilles 19.3.6.4, 23.3.5.4, 24.3.6.6, 25.3.6.6, 26.2.3.6.4, 26.3.3.6.6
Transformers
Assembly occupancies 16.3.2.1.1
Hotels and dormitories 24.3.2.1
Transient lodging (accessibility) ..... 12.6.5.3, 12.24, 12.45.3; *see also* Hotels and dormitories
Definition 3.3.626
Platform (wheelchair) lifts 12.6.7.6
Visible alarms 12.15.4
Windows ..... 12.29 Ex. 2
Transition plate (accessibility) (definition) 3.3.628
Transoms ..... 8.7.12, 15.7.3.4.2(1), 24.3.6.6
Apartment buildings 25.3.6.6
Historic buildings 15.10.4.6, 15.10.5.7
Lodging or rooming houses 23.3.5.2
Occupancy classification, change of ..... 15.7.3.5.1.1(5)
Residential board and care occupancies 26.2.3.6.3, 26.3.3.6.6
Transportation facilities (accessibility) 12.6.4.4, 12.17.4.7, 12.18, 12.45.6
Trusses ..... Table 7.2.1.1.2, 44.7.3, 45.5.16, 45.6.4.3
Enhanced fire compartments ..... Table D.2.1.1(a), D.2.5.3, D.2.7.2.3, D.2.7.6
Fire resistance 7.2.7.6
Type IV construction 7.2.5.3
Type V construction D.2.7.2.3, D.2.7.6
TTY (accessibility) 12.17.4
Definition 3.3.629
Signs 12.16.8
Tubes ..... *see* Pipes and piping; Pneumatic tubing
Tunnels ..... *see* Underground structures
Turbines, gas, buildings housing 6.4.2.14
Turnstiles 11.2.1.11, 16.2.2.2.7, 16.2.2.2.8
Two-family dwellings (definition) ..... 3.3.171.4; *see also* One- and two-family dwellings
Type II shear wall segment ..... *see* Walls

-U-

Uncertainty analysis ..... *see* Analysis
Uncontrolled moisture 4.1.4.6, 5.2.11
Underground structures 31.2
Assembly occupancies 16.4.3
Business occupancies 28.4.1
Change of use 15.7.2.1.2
Construction type 7.4.3.5
Day-care occupancies 18.4.1
Definition 3.3.601.16, A.3.3.601.16
Detention and correctional occupancies 21.4.2
Educational occupancies 17.4.1
Emergency lighting ..... 11.9.1.1(2)
Enhanced fire compartments D.4.3.2
Health care occupancies 20.4.2
Hotel and dormitory occupancies 24.4.1
Industrial occupancies 29.4.1
Means of egress 31.2
Mercantile occupancies 27.4.1
Occupant load 31.2.1, 31.2.3, 31.2.4
Parking 6.4.2.54, 30.8.3.5.2
Residential board and care occupancies 26.3.4.1
Single occupant structures, access to 12.3.6
Storage occupancies 30.4.1, 30.7.5
Tanks C.1.5.1, C.8.1
Terminals ..... A.6.1.2.1(17)
Tunnels, entrances from 12.6.4.3
Vermin proofing B.2.1, B.2.3
Units of measurement 1.6
Unlawful occupancy 1.7.7.3
Unsafe buildings ..... 1.3.4(4), 1.7.5.3, 15.1.1.3, 15.1.2.4.3, 15.4.3.2, 15.9, A.1.7.5.3.1.1(10), A.15.9.2.2.2 to A.15.9.3.3.1
Nonstructural conditions 15.9.2, A.15.9.2.2.2
Structural conditions 15.9.3, A.15.9.3
Substantial damage 15.9.3.3.1, A.15.8.3.3.1
Unstable (reactive) material ..... 6.3.2.4.2(5), 6.3.2.4.3(7), 6.3.2.4.4(9), Table 34.1.3.1, Tables 34.1.3.2(a) to (h)
Definition 3.3.388.19, A.3.3.388.19
Explosion control ..... Table 34.3.2.6
Floors, high hazard contents storage rooms 34.3.2.9
Semiconductor manufacturing operations ... Table 34.3.7.2.1.2(A), Table 34.3.7.2.4.6
Urinals 12.13.3.3, 12.44.3, 15.3.7.2
Use 4.1.1, 4.1.5, A.4.1.1, A.4.1.5.3.1, A.4.1.5.3.2
Accessibility based on 12.1.2
Change of ..... *see* Change of use
Children's use (accessibility)
Definition 3.3.636.3
Common use (accessibility)
Definition 3.3.636.4, A.3.3.636.4
Visible alarms 12.15.2
Material
Closed system use (definition) 3.3.636.1.1, A.3.3.636.1.1
Definition 3.3.636.1
Open system use (definition) 3.3.637.1.2, A.3.3.637.1.2
Public use (accessibility)
Definition 3.3.636.5, A.3.3.636.5
Safety during 4.1.3.3, A.4.1.3.3.1
Performance-based design option 5.2.4, 5.5.4, A.5.2.4.3, A.5.5.4.1
Utility services
Apartment buildings 25.5.1
Assembly occupancies 16.5.1
Business occupancies 28.5.1
Connection of 1.7.6.7.4
Construction, safeguards during 14.3
Day-care occupancies 18.5.1
Detention and correctional occupancies 21.5.1
Educational occupancies 17.5.1
Flood-resistant construction ..... 39.11.2.3, C.1.5.1, C.2.1, C.6.1(2), C.6.2(4), C.7.3
Health care occupancies 19.5.1, 20.5.1
Hotels and dormitories 24.5.1
Industrial occupancies 29.5.1
Lodging or rooming houses 23.3.5.3, 23.5.1
Mercantile occupancies 27.5.1
Occupancy category for wind, snow, and earthquake ..... Table 35.3.1
Residential board and care occupancies 26.2.3.6.3, 26.2.5.1, 26.3.6.1

Copyright National Fire Protection Association
Provided by IHS under license with NFPA
No reproduction or networking permitted without license from IHS
Not for Resale

Storage occupancies 30.5.1, 30.8.5.1
Temporary light and power 14.4
Vermin proofing B.2.5

-V-

Valet parking 12.9.4
Vapor retarders 41.6.3
Definition 3.3.637, 38.1.1.12
Water vapor retarders (definition) 3.3.637.1
Variances (flood resistance) C.4
Definition 3.3.638, 39.2.24
Vehicles ..... 31.4.1; *see also* Garages; Parking structures
Vehicular fuel systems, CNG, buildings housing 6.4.2.10
Vehicular way (accessibility) (definition) ..... 3.3.650.2; *see also* Public ways; Streets
Vending machines (accessibility) 12.28
Veneered wall ..... *see* Walls
Ventilation ..... 49.2, 50.1(8), A.48.9.2.5.2.3, A.49.2.6; *see also* Ducts and air transfer openings; Heating, ventilating, and air conditioning (HVAC) systems
Attics/attic story 38.8, A.38.8.1
Change of use requirements 15.7.2.7
Contaminants, control of 5.2.6, A.5.2.6.1, A.5.2.6.2
Cooking equipment/facilities, commercial ..... 49.2.4, 50.1(6)
Elevator machine rooms/machinery spaces 54.5
Flood hazard areas 49.2.6, A.49.2.6
Hazardous materials and chemicals ..... 49.2.2.1.4 to 49.2.2.1.8, 49.2.3
Hazardous production material (HPM) rooms 34.3.7.2.4.4
High hazard contents ... 34.3.2.5, 34.3.2.7.1, 34.3.2.7.2, 34.3.6.1.2
Membrane structures 32.2.1.5.1
Modifications 15.5.6.1, 15.5.6.2
Parking structures ..... 49.2.2.4 to 49.2.2.6
Permits 1.7.6.1.1.2
Projection rooms 16.4.6.6
Radon control methods 49.2.5, A.49.2.5.2.3
Rates, ventilation 49.2.2
Reconstruction requirements 15.6.2.7.1
Semiconductor fabrication areas 34.3.7.3.3, 34.3.7.3.7.2, 34.3.7.3.7.3, 34.3.7.3.8, A.34.3.7.3.8.4
Smoke compartments 16.4.3.3.3, 16.4.3.4
Smokeproof enclosures 11.2.3.2, 11.2.3.7, 11.2.3.8, 11.2.3.10, 11.2.3.12
Smoke-protected assembly seating ..... 16.4.2.1(4)
Stages, for 16.4.5.4
Vent pipes, radon protection ..... 49.2.5.3.4.3, 49.2.5.3.5.1 to 49.2.5.3.5.6
Vents
Elevator hoistways 54.9
Penetrations for ..... 8.3.2.15, 8.8.2, 8.8.7, A.8.8.2.2.1(1)
Roof vents, stage 16.4.5.4.2
Verification method (definition) 3.3.641
Vermin proofing ..... Annex B
Vertical openings ..... 4.4.5, 7.2.7.2.2(2), 8.12, A.8.12.1.2 to A.8.12.5.2(2); *see also* Atriums; Shafts
Apartment buildings 25.3.1
Assembly occupancies 16.3.1, A.16.3.1
Business occupancies 28.3.1
Communicating space ..... 8.12.2, A.8.12.2(7)
Convenience openings ..... 8.12.4, A.8.12.4.2(4)
Day-care occupancies 18.3.1, 18.6.3.1
Definition 3.3.437.1
Detention and correctional occupancies ..... 21.3.1, 21.4.4.6, A.21.3.1(2), A.21.4.4.6.2, A.21.4.4.6.4
Educational occupancies 17.3.1
Enclosures ..... *see* Enclosures
Enhanced fire compartments D.3.9
Fireblocks ..... 8.14.2.1(3)
Guards ..... 11.1.8.2(4)
Health care occupancies 19.3.1, 20.3.1
High hazard contents areas 34.3.2.10
Horizontal exits, fire barriers providing ..... 11.2.4.3.2(2)
Hotels and dormitories 24.3.1
Industrial occupancies 29.3.1, 34.3.2.10
Lodging or rooming houses 23.3.1
Mercantile occupancies 27.3.1
Occupancy classification, change in ..... 15.7.3.4.3(2), 15.7.3.4.4(2), 15.7.3.6
Open structures 31.5.2.9.1
Parking structures 30.8.3.1
Reconstruction requirements 15.6.2.3
Residential board and care occupancies 26.2.3.1, 26.3.3.1
Semiconductor fabrication areas 34.3.7.2.1.5
Service openings ..... 8.12.5, A.8.12.5.2(2)
Storage occupancies 30.3.1, 30.8.3.1
Towers 31.6.11.1
Vessels, marine 31.4.2
Vestibules
Exit discharge 11.7.2.4
Sally ports (security vestibules) 21.2.5.4
Definition 3.3.538
Smokeproof enclosures ..... 11.2.3.2, 11.2.3.4, 11.2.3.6 to 11.2.3.8, 11.9.1.1(5)
Vibration isolation 8.8.5, 8.10.4.3, 8.11.5.6
Violations ..... *see* Enforcement of code
Visual protection (ramps/stairs) ... 11.2.2.7.2, 11.2.5.7.1, A.11.2.2.7.2

-W-

Wading pools (accessibility) ..... 12.42.3, 12.45.15; *see also* Pools, swimming
Walk (accessibility) (definition) 3.3.644
Walkways
Construction site A.14.1
Elevated 12.6.4.3
Live load ..... Table A.35.6.1.2
Wallboard ..... *see* Gypsum wallboard
Wall panels
Definition 3.3.447.2
Light-transmitting plastic panels ..... *see* Light-transmitting plastic
Metal composite panel walls (definition) 3.3.645.10
Walls ... *see also* Construction types; Fire-resistance-rated construction; Partitions
Angle 8.3.2.16.3
Bearing ..... Table 7.2.1.1.2, 7.2.5.1
Definition 3.3.644.1, 35.2.33.1
Enhanced fire compartments ..... Table D.2.1.1(a)
Fire-resistant 7.2.7.2.1
Type V construction 7.2.6, D.2.7.2.1, D.2.7.2.2
Bearing wall system (definition) 3.3.608.2
Breakaway design ..... 35.4.2.6.2(8), 39.11.2.1, 39.11.2.2, 39.12.3.2.2, A.39.11.2.1
Cavity (definition) ..... 3.3.644.2; *see also* Concealed spaces
Concrete 41.2
Cripple (definition) 3.3.644.3, 35.2.33.3
Definition 35.2.33
Deflection limits ..... Table 35.1.2.8.1.1
End 8.3.2.16.2, A.8.3.2.16.2.1
Enhanced fire compartments D.2.3.1, D.2.4.1, D.2.6
Type III construction D.2.4.2.3
Type IV construction D.2.5.1, D.2.5.6.7
Exterior ..... *see* Exterior walls
Fiberboard insulation ..... 45.6.11.3 to 45.6.11.5
Finish ..... *see* Interior finish
Fire ..... *see* Fire walls
Fire barrier ..... *see* Fire barrier walls
Fireblocks 8.14.2.1
Fire resistance ..... *see* Fire-resistance-rated construction
Flexible plan buildings 17.4.3.3
Foundation ..... *see* Foundation walls
Framing, wood ..... 1.7.6.6.3.4(D), 45.6.5
Glazing in 46.5.2.1, 46.5.2.2
Height (definition) 3.3.308.3
Light framed (definition) 3.3.644.7, 35.2.33.4

--`,,```,,,,````-`-`,,`,,`,`,,`---

Copyright National Fire Protection Association
Provided by IHS under license with NFPA
No reproduction or networking permitted without license from IHS
Not for Resale

Live loads 35.6.9
Masonry .....*see* Masonry
Metal composite panel walls (definition) 3.3.644.10
Nonbearing
Definition 3.3.644.11, 35.2.33.6
Enhanced fire compartments ..... Table D.2.1.1(a), D.2.3.2.11, D.2.3.2.12, D.2.4.2.3, D.2.5.6.8
Fire-resistant ..... 7.2.7.2.1, 7.2.7.2.2(1)
High challenge fire walls 8.3.2.2.3
Type I and Type II construction 7.2.3.2.11, 7.2.3.2.12
Type III construction 7.2.4.2.3
Type IV construction 7.2.5.6.8
Nonstructural (definition) 3.3.644.12, 35.2.33.7
Penetrations .....*see* Penetrations
Pools and spas 32.8.2.1
Proscenium 16.4.5.5
Definition 3.3.644.13
Retaining 36.9
Definition 3.3.644.14
Shear
Definition 3.3.644.15
Gypsum-board systems 47.2.1.4
Light-framed wood (definition) 3.3.644.8, 35.2.33.5
Portland cement 47.4.1.1
Type II (perforated) 3.3.644.15.2, A.3.3.644.15.2
Definition 44.1.1.3.2, A.44.1.1.3.2
Type II shear wall segment (definition) 3.3.632, 44.1.1.2, A.3.3.632
Type I (segmented) (definition) 3.3.644.15.1, 44.1.1.3.1
Sheathing, wood 45.6.6
Underground, vermin proofing of B.2.1, B.2.3
Veneered
Definition 3.3.644.16
Gypsum veneer plaster 47.1, 47.2.4, 47.2.5, A.47.1.5.9.2
Definition 3.3.471.2, 47.1.5.8.2
Masonry veneer 43.8.2
Plastic veneer 48.6.2, 48.6.3, 48.7.2
Wall scuppers 38.6.3
Washing machines 12.14.1, 12.14.2
Waste discharge .....*see* Plumbing systems, Discharge
Waste handling systems, facilities housing 6.4.2.32
Wastewater treatment plants 6.4.2.64
Water
Drinking fountains and water coolers 12.11, 17.2.3.2.2
Elevators, water protection for 11.2.13.6, A.11.2.13.6
Outside stairs/ramps, accumulation on 11.2.2.7.5, 11.2.5.7.2, A.11.2.2.7.5
Sinks, kitchen 12.12.3, 15.3.7.2
Surface water entry .....*see* Surface water entry
Water accumulation, landings/stairs 11.2.2.7.5, 11.2.5.7.2, A.11.2.2.7.5
Water closets 12.13.3.2, 12.45.2.4, 12.45.3.2.4, 12.45.4.2.3, 15.3.7.2
Water conservation 15.4.7.2
Watercourse alteration C.2.7
Water curtain 16.4.5.6
Waterflow alarms .....*see* Alarms and alarm systems
Water heating equipment ..... 53.1(1)
Water mist extinguishing systems ..... Table 55.5.1
Waterproofing, foundation 36.8
Water-reactive material .... 6.3.2.4.3(8), 6.3.2.4.4(10), Table 34.1.3.1, Tables 34.1.3.2(a) to (h), 34.3.4.5, 34.3.5.7
Definition 3.3.388.20, A.3.3.388.20
Explosion control ..... Table 34.3.2.6
Floors, high hazard contents storage rooms 34.3.2.9
Semiconductor manufacturing operations ... Table 34.3.7.2.1.2(A), Table 34.3.7.2.4.6
Water slides (accessibility) 12.3.11
Water-surrounded structures 31.7
Definition 3.3.601.17
Water vapor retarders (definition) 3.3.638.1
Ways .....*see* Public ways; Vehicular way (accessibility)
Weathered-membrane materials
Definition 3.3.388.21, 32.1.3.12
Tests 32.2.2.1
Weather-exposed surfaces 37.3.1, 47.2.1.1
Definition 3.3.606.3, 47.1.5.9.2, A.3.3.607.3, A.47.1.5.9.2
Weather protection, outside storage of hazardous materials ... 34.2.5
Weather-resistive barriers 37.3.1
Wet chemical extinguishing systems ..... Table 55.5.1
Wharves 6.4.2.41
Wheelchair
Platform lifts 12.6.7, 54.11
Spaces
Amusement rides 12.6.2.9.2, 12.34.3, 12.45.8.2.4
Area of refuge 11.2.12.3.1, 11.2.12.3.3, A.11.2.12.3.1
Assembly seating 12.6.7.2, 12.21
Telephones, accessible 12.17.2
Width of stairway for A.11.2.12.2.3
Wheelchair space (definition) 3.3.574.1
Wildland/urban interface 4.5.7
Definition 3.3.654
Wildland/urban intermix 4.5.7
Definition 3.3.655
Wind loads .....*see* Loads
Window assemblies .....*see also* Fire window assemblies
Type I and Type II construction ..... 7.2.3.2.13(4)
Windows .....*see also* Fire windows
Accessibility 12.29
Atriums ..... 8.12.3(1), 19.3.8(2), A.8.12.3(1)(b)
Bay 37.2.2
Definition 3.3.656.1
Detention and correctional occupancies ..... 21.4.4.13.2(1)
Egress/rescue
Day-care occupancies ..... 18.2.11.1, 18.6.2.4.2 to 18.6.2.4.4
Educational occupancies 17.2.11, A.17.2.11.1
Historic buildings 15.10.4.4, 15.10.5.5
Occupancy classification, change of ..... 15.7.3.5.1.1(7)
One- and two-family dwellings 22.2.2.4.3, A.22.2.2.4.3
Residential board and care occupancies ..... 26.2.2.2(3), A.26.2.2.2(3)
Exterior walls 8.7.10
Flashing ..... 37.3.2(2)
Glazing .....*see* Glazing
Health care occupancies 19.3.8, A.19.3.8
Industrial occupancies ..... 29.2.9.2(2)
Limited-access structures 31.3.1.2
Louvered windows or jalousies ..... 46.4, 46.5.1(6), 46.5.2.3(6)
Means of egress 11.2.1.1.2
Modifications 15.5.1.5.1
Oriel 37.2.2
Semiconductor fabrication areas ..... 34.3.7.2.1.3(B)
Smoke barriers 20.3.7.5
Storage occupancies 30.2.8.2
Vermin proofing B.2.4
Window wells 37.3.6
Wind requirements, roof coverings .....*see* Roof coverings
Wind speed, basic .....*see* Basic wind speed *(V)*
Wind zones, high 40.2.3.4
High challenge fire walls 8.3.2.13.2
Wiring, penetrations for ..... 8.8.2, 8.8.7, A.8.8.2.2.1(1)
Wood .... Chap. 45; *see also* Lumber; Timber; Wood structural panels
Beams and girders 7.2.5.5.2, 7.2.5.6.2
Columns 7.2.5.5.1, 7.2.5.6.2
Connectors, nails, and staples 45.5.17, 45.6.8
Construction requirements, general 45.6, A.45.6.9.6.16
Criteria 45.5
Decay and termites, protection against 45.6.9
Deflection limits, structural members 35.1.2.8.7
Design requirements 45.4, A.45.4.1.1
Fire retardant-treated
Awnings and canopies ..... 32.4.2.1(3)

Copyright National Fire Protection Association
Provided by IHS under license with NFPA
No reproduction or networking permitted without license from IHS
Not for Resale

Balconies, decks, and porches 37.2.2.2
Cornices 37.2.1
Grandstands ..... 16.4.8.3.3, 16.4.8.3.6(1), 32.7.5.2(5), 32.7.5.4
Kiosks ..... 27.4.4.12.1(1)
Platforms 7.2.3.2.7, D.2.3.2.7
Plenums 7.2.3.2.15.8
Roofs 7.2.3.2.9, 38.3.2, A.38.3.2, D.2.3.2.9
Type I and Type II construction 7.2.3.2.11.2, 7.2.3.2.12.1, D.2.3.2.7, D.2.3.2.9, D.2.3.2.11.2, D.2.3.2.12.1
Type III construction 7.2.4.2.1, D.2.4.2.1
Type IV construction 7.2.5.6.7, D.2.5.6.7
Fire-retardant-treated 45.5.15
Definition 3.3.657.1, 45.2.8.1
Roofs ..... 22.4.4(2)
Floors ..... 7.2.5.5.5, 7.2.5.6.4, Table D.2.1.1(a), D.2.5.1, D.2.5.5.5
Foundations 36.7, A.36.7
Grandstands 16.4.8.3
Gypsum board, support for 47.2.1.5.2
I-joists, prefabricated 45.5.5
Naturally durable 45.6.9.1, 45.6.9.2, 45.6.9.6.1
Partitions 7.2.5.6.3
Piles, foundation 36.5.4
Preservative-treated 45.5.11, 45.6.9.1, 45.6.9.3, 45.6.9.6.1
Definition 3.3.657.2, 45.2.8.2
Piles, foundation 36.5.4.2.3
Quality assurance programs 40.3.11
Roof decks 7.2.5.5.6, 7.2.5.6.2, D.2.5.5.6, D.2.5.6.2
Shakes 38.9.14, A.38.9.14.5
Shingles 38.9.13, A.38.9.13.5
Sleepers ..... 7.2.3.2.1, 7.2.3.2.2, Table D.2.1.1(a)
Stairways 7.2.5.6.6.1
Type V construction 7.2.6
Wood processing and woodworking facilities 6.4.2.65, 29.3.5.1.2
Wood structural panels 7.2.5.5.5, 7.2.5.5.6, 8.14.1.3, 45.5.7
Composite (definition) 3.3.447.3.1, 45.2.9.1
Definition 3.3.447.3, 45.2.9
Fireblocks ..... 8.14.2.4(1)
Fire-retardant-treated 45.5.15.2.2.1
Interior paneling 45.5.14
Oriented strand board (OSB) (definition) ... 3.3.448.3.2, 45.2.9.2
Plywood
Definition 3.3.447.3.3, 45.2.9.3
Foundation walls 45.6.9.6.16
Hardwood 45.5.13, 45.5.14.2
Roof decks, use above 38.3.2, A.38.3.2
Sheathing ..... 45.6.6.2 to 45.6.6.4, 45.6.7.2
Work, categories of rehabilitation (definition) 3.3.72
Work area
Employee work area (accessibility) 12.3.9, 12.6.2.8
Definition 3.3.33.12.1, A.3.3.33.12.1
Visible alarms 12.15.3
Rehabilitation work area ..... 15.1.1.6.2, 15.1.1.6.3, 15.5.1.3.4, 15.5.5.1, 15.5.5.3, 15.5.5.4.3, 15.5.6.1, 15.5.6.4, 15.6.2.2; *see also* Modifications; Reconstruction; Renovations
Area included as 15.6.1.4
Definition 3.3.33.12.2, A.3.3.33.12.2
Identification of 15.1.4
Work area equipment (accessibility) (definition) 3.3.660
Workstations (definition) 3.3.661, A.3.3.661
Work surfaces 12.26
Written notice ..... 1.7.5.3.3 to 1.7.5.3.6, 1.7.5.3.8
Definition 3.3.662
Flood hazard area, construction in ..... C.4.4(6)
Watercourse alteration C.2.7.1

-Y-

Yards ..... 7.6.3.1, 7.6.3.2.1, 7.6.3.3(2), 7.6.3.4, 7.6.3.7(3), 7.6.3.8, 7.6.3.9(5)
Definition 3.3.663
Exit discharge 11.7.1.1
Smokeproof enclosures 11.2.3.5
Live loads ..... Table A.35.6.1.2

-Z-

Zirconium production and processing facilities 6.4.2.66

Copyright National Fire Protection Association
Provided by IHS under license with NFPA
No reproduction or networking permitted without license from IHS
Not for Resale

Sequence of Events Leading to Publication of an NFPA Committee Document

Call goes out for proposals to amend existing document or for recommendations on new document.

▼

Committee meets to act on proposals, to develop its own proposals, and to prepare its report.

▼

Committee votes on proposals by letter ballot. If two-thirds approve, report goes forward. Lacking two-thirds approval, report returns to committee.

▼

Report — *Report on Proposals* (ROP) — is published for public review and comment.

▼

Committee meets to act on each public comment received.

▼

Committee votes on comments by letter ballot. If two-thirds approve, supplementary report goes forward. Lacking two-thirds approval, supplementary report returns to committee.

▼

Supplementary report — *Report on Comments* (ROC) — is published for public review.

▼

NFPA membership meets (Annual or Fall Meeting) and acts on committee report (ROP or ROC).

▼

Committee votes on any amendments to report approved at NFPA Annual or Fall Meeting.

▼

Appeals to Standards Council on Association action must be filed within 20 days of the NFPA Annual or Fall Meeting.

▼

Standards Council decides, based on all evidence, whether or not to issue standard or to take other action, including upholding any appeals.

Committee Membership Classifications

The following classifications apply to Technical Committee members and represent their principal interest in the activity of the committee.

M *Manufacturer:* A representative of a maker or marketer of a product, assembly, or system, or portion thereof, that is affected by the standard.

U *User:* A representative of an entity that is subject to the provisions of the standard or that voluntarily uses the standard.

I/M *Installer/Maintainer:* A representative of an entity that is in the business of installing or maintaining a product, assembly, or system affected by the standard.

L *Labor:* A labor representative or employee concerned with safety in the workplace.

R/T *Applied Research/Testing Laboratory:* A representative of an independent testing laboratory or independent applied research organization that promulgates and/or enforces standards.

E *Enforcing Authority:* A representative of an agency or an organization that promulgates and/or enforces standards.

I *Insurance:* A representative of an insurance company, broker, agent, bureau, or inspection agency.

C *Consumer:* A person who is, or represents, the ultimate purchaser of a product, system, or service affected by the standard, but who is not included in the *User* classification.

SE *Special Expert:* A person not representing any of the previous classifications, but who has a special expertise in the scope of the standard or portion thereof.

NOTES:

1. "Standard" connotes code, standard, recommended practice, or guide.
2. A representative includes an employee.
3. While these classifications will be used by the Standards Council to achieve a balance for Technical Committees, the Standards Council may determine that new classifications of members or unique interests need representation in order to foster the best possible committee deliberations on any project. In this connection, the Standards Council may make such appointments as it seems appropriate in the public interest, such as the classification of "Utilities" in the National Electrical Code Committee.
4. Representatives of subsidiaries of any group are generally considered to have the same classification as the parent organization.

--`,,```,,,,````-`-`,,`,,`,`,,`---

Copyright National Fire Protection Association
Provided by IHS under license with NFPA
No reproduction or networking permitted without license from IHS

Not for Resale

NFPA Technical Committee Document Proposal Form

Note: All proposals must be received by 5:00 p.m. EST/EDST on the published proposal closing date.

For further information on the standards-making process, please contact Codes and Standards Administration at 617-984-7249. For technical assistance, please call NFPA at 617-770-3000.

FOR OFFICE USE ONLY
Log #: _____
Date Rec'd: _____

Please indicate in which format you wish to receive your ROP/ROC: ☐ **CD ROM** ☐ **paper** ☐ **download**
(Note: In choosing the download option you intend to view the ROP/ROC from our Website. No copy will be sent to you.)

Date 12/18/02 **Name** John B. Smith **Telephone** 617-555-1212
Company _____
Address 9 Seattle St. **City** Seattle **State** WA **Zip** 02255
Please indicate organization represented (if any) Fire Marshals Assn. of North America

1. **a) NFPA Document Title** National Fire Alarm Code
   b) NFPA No. & Edition NFPA 72, 2002 ed. **c) Section/Paragraph** 4.4.7.1.1

2. **Proposal Recommends:** *(check one)* ☐ **new text** ☐ **revised text** ☒ **deleted text**

3. **Proposal.** *(Include proposed new or revised wording, or identification of wording to be deleted.)* Note: Proposed text should be in legislative format, that is, use underscore to denote wording to be inserted (inserted wording) and strike-through to denote wording to be deleted (~~deleted wording~~). Delete exception.

4. **Statement of Problem and Substantiation for Proposal.** Note: State the problem that will be resolved by your recommendation. Give the specific reason for your proposal including copies of tests, research papers, fire experience, etc. If more than 200 words, it may be abstracted for publication. A properly installed and maintained system should be free of ground faults. The occurrence of one or more ground faults should be required to cause a "trouble" signal because it indicates a condition that could contribute to future malfunction of the system. Ground fault protection has been widely available on these systems for years and its cost is negligible. Requiring it on all systems will promote better installations, maintenance and reliability.

5. ☒ **This Proposal is Original Material.** Note: Original material is considered to be the submitter's own idea based on or as a result of his/her own experience, thought, or research and, to the best of his/her knowledge, is not copied from another source.

   ☐ **This Proposal is Not Original Material; Its Source** ***(if known)*** **is as Follows:** _____

Sample

I hereby grant the NFPA all and full rights in copyright to this proposal, and I understand that I acquire no rights in any publication of NFPA in which this proposal in this or another similar or analogous form is used.

Signature ***(Required)*** John B. Smith

PLEASE USE SEPARATE FORM FOR EACH PROPOSAL • NFPA FAX (617) 770-3500

Mail to: Secretary, Standards Council • NFPA • 1 Batterymarch Park • PO Box 9101 • Quincy, MA 02269-9101

Copyright National Fire Protection Association
Provided by IHS under license with NFPA
No reproduction or networking permitted without license from IHS
Not for Resale

NFPA Technical Committee Document Proposal Form

Note: All proposals must be received by 5:00 p.m. EST/EDST on the published proposal closing date.

For further information on the standards-making process, please contact Codes and Standards Administration at 617-984-7249. For technical assistance, please call NFPA at 617-770-3000.

FOR OFFICE USE ONLY
Log #: _____
Date Rec'd: _____

Please indicate in which format you wish to receive your ROP/ROC: ☐ **CD ROM** ☐ **paper** ☐ **download**
(Note: In choosing the download option you intend to view the ROP/ROC from our Website. No copy will be sent to you.)

Date _____ **Name** _____ **Telephone** _____
Company _____
Address _____ **City** _____ **State** _____ **Zip** _____
Please indicate organization represented (if any) _____

1. **a) NFPA Document Title** _____
   b) NFPA No. & Edition _____ **c) Section/Paragraph** _____

2. **Proposal Recommends:** *(check one)* ☐ **new text** ☐ **revised text** ☐ **deleted text**

3. **Proposal.** *(Include proposed new or revised wording, or identification of wording to be deleted.)* Note: Proposed text should be in legislative format, that is, use underscore to denote wording to be inserted (inserted wording) and strike-through to denote wording to be deleted (~~deleted wording~~). _____

4. **Statement of Problem and Substantiation for Proposal.** Note: State the problem that will be resolved by your recommendation. Give the specific reason for your proposal including copies of tests, research papers, fire experience, etc. If more than 200 words, it may be abstracted for publication. _____

5. ☐ **This Proposal is Original Material.** Note: Original material is considered to be the submitter's own idea based on or as a result of his/her own experience, thought, or research and, to the best of his/her knowledge, is not copied from another source.

   ☐ **This Proposal is Not Original Material; Its Source *(if known)* is as Follows:** _____

I hereby grant the NFPA all and full rights in copyright to this proposal, and I understand that I acquire no rights in any publication of NFPA in which this proposal in this or another similar or analogous form is used.

Signature *(Required)* _____

PLEASE USE SEPARATE FORM FOR EACH PROPOSAL • NFPA FAX (617) 770-3500

Mail to: Secretary, Standards Council • NFPA • 1 Batterymarch Park • PO Box 9101 • Quincy, MA 02269-9101

Copyright National Fire Protection Association
Provided by IHS under license with NFPA
No reproduction or networking permitted without license from IHS
Not for Resale