NFPA 302

Fire Protection Standard for Pleasure and Commercial Motor Craft

2004 Edition

NFPA, 1 Batterymarch Park, Quincy, MA 02169-7471
An International Codes and Standards Organization

Copyright National Fire Protection Association
Provided by IHS under license with NFPA
No reproduction or networking permitted without license from IHS

Not for Resale

IMPORTANT NOTICES AND DISCLAIMERS CONCERNING NFPA DOCUMENTS

NOTICE AND DISCLAIMER OF LIABILITY CONCERNING THE USE OF NFPA DOCUMENTS

NFPA codes, standards, recommended practices, and guides, of which the document contained herein is one, are developed through a consensus standards development process approved by the American National Standards Institute. This process brings together volunteers representing varied viewpoints and interests to achieve consensus on fire and other safety issues. While the NFPA administers the process and establishes rules to promote fairness in the development of consensus, it does not independently test, evaluate, or verify the accuracy of any information or the soundness of any judgments contained in its codes and standards.

The NFPA disclaims liability for any personal injury, property or other damages of any nature whatsoever, whether special, indirect, consequential or compensatory, directly or indirectly resulting from the publication, use of, or reliance on this document. The NFPA also makes no guaranty or warranty as to the accuracy or completeness of any information published herein.

In issuing and making this document available, the NFPA is not undertaking to render professional or other services for or on behalf of any person or entity. Nor is the NFPA undertaking to perform any duty owed by any person or entity to someone else. Anyone using this document should rely on his or her own independent judgment or, as appropriate, seek the advice of a competent professional in determining the exercise of reasonable care in any given circumstances.

The NFPA has no power, nor does it undertake, to police or enforce compliance with the contents of this document. Nor does the NFPA list, certify, test or inspect products, designs, or installations for compliance with this document. Any certification or other statement of compliance with the requirements of this document shall not be attributable to the NFPA and is solely the responsibility of the certifier or maker of the statement.

--`,,,,`,,-`-`,,`,,`,`,,`---

Copyright National Fire Protection Association
Provided by IHS under license with NFPA
No reproduction or networking permitted without license from IHS

Not for Resale

ADDITIONAL NOTICES AND DISCLAIMERS

Updating of NFPA Documents

Users of NFPA codes, standards, recommended practices, and guides should be aware that these documents may be superseded at any time by the issuance of new editions or may be amended from time to time through the issuance of Tentative Interim Amendments. An official NFPA document at any point in time consists of the current edition of the document together with any Tentative Interim Amendments and any Errata then in effect. In order to determine whether a given document is the current edition and whether it has been amended through the issuance of Tentative Interim Amendments or corrected through the issuance of Errata, consult appropriate NFPA publications such as the National Fire Codes® Subscription Service, visit the NFPA website at www.nfpa.org, or contact the NFPA at the address listed below.

Interpretations of NFPA Documents

A statement, written or oral, that is not processed in accordance with Section 6 of the Regulations Governing Committee Projects shall not be considered the official position of NFPA or any of its Committees and shall not be considered to be, nor be relied upon as, a Formal Interpretation.

Patents

The NFPA does not take any position with respect to the validity of any patent rights asserted in connection with any items which are mentioned in or are the subject of NFPA codes, standards, recommended practices, and guides, and the NFPA disclaims liability for the infringement of any patent resulting from the use of or reliance on these documents. Users of these documents are expressly advised that determination of the validity of any such patent rights, and the risk of infringement of such rights, is entirely their own responsibility.

NFPA adheres to applicable policies of the American National Standards Institute with respect to patents. For further information contact the NFPA at the address listed below.

Law and Regulations

Users of these documents should consult applicable federal, state, and local laws and regulations. NFPA does not, by the publication of its codes, standards, recommended practices, and guides, intend to urge action that is not in compliance with applicable laws, and these documents may not be construed as doing so.

Copyrights

This document is copyrighted by the NFPA. It is made available for a wide variety of both public and private uses. These include both use, by reference, in laws and regulations, and use in private self-regulation, standardization, and the promotion of safe practices and methods. By making this document available for use and adoption by public authorities and private users, the NFPA does not waive any rights in copyright to this document.

Use of NFPA documents for regulatory purposes should be accomplished through adoption by reference. The term "adoption by reference" means the citing of title, edition, and publishing information only. Any deletions, additions, and changes desired by the adopting authority should be noted separately in the adopting instrument. In order to assist NFPA in following the uses made of its documents, adopting authorities are requested to notify the NFPA (Attention: Secretary, Standards Council) in writing of such use. For technical assistance and questions concerning adoption of NFPA documents, contact NFPA at the address below.

For Further Information

All questions or other communications relating to NFPA codes, standards, recommended practices, and guides and all requests for information on NFPA procedures governing its codes and standards development process, including information on the procedures for requesting Formal Interpretations, for proposing Tentative Interim Amendments, and for proposing revisions to NFPA documents during regular revision cycles, should be sent to NFPA headquarters, addressed to the attention of the Secretary, Standards Council, NFPA, 1 Batterymarch Park, P.O. Box 9101, Quincy, MA 02269-9101.

For more information about NFPA, visit the NFPA website at www.nfpa.org.

Copyright National Fire Protection Association
Provided by IHS under license with NFPA
No reproduction or networking permitted without license from IHS
Not for Resale

Copyright © 2004, National Fire Protection Association, All Rights Reserved

NFPA 302

Fire Protection Standard for

Pleasure and Commercial Motor Craft

2004 Edition

This edition of NFPA 302, *Fire Protection Standard for Pleasure and Commercial Motor Craft*, was prepared by the Technical Committee on Motor Craft and acted on by NFPA at its May Association Technical Meeting held May 23–26, 2004, in Salt Lake City, UT. It was issued by the Standards Council on July 16, 2004, with an effective date of August 5, 2004, and supersedes all previous editions.

This edition of NFPA 302 was approved as an American National Standard on August 5, 2004.

Origin and Development of NFPA 302

This *Fire Protection Standard for Pleasure and Commercial Motor Craft* represents the cumulative result of over 75 years of attention to fire safety of boats by the NFPA. The first edition of this standard was adopted by the Association in 1937. Successive editions were adopted in 1939, 1948, 1950, 1951, 1952, 1953, 1954, 1955, 1957, 1960, 1964, 1966, 1968, 1972, 1980, 1984, 1989, 1994, and 1998. Prior to 1937, the information was contained in Appendix D of NFPA 301, *Fire Prevention Regulations for the Construction and Maintenance of Vessels*.

The 2004 edition of NFPA 302 contains a first-time requirement in the industry for smoke detectors on pleasure boats. The chapters on fire protection equipment and electrical systems were updated based on the latest technologies. NFPA 302 has been completely revised for the 2004 edition to comply with the latest edition of the NFPA *Manual of Style*.

--`,,,,`,-`-`,,`,,`,`,,`---

Copyright National Fire Protection Association
Provided by IHS under license with NFPA
No reproduction or networking permitted without license from IHS

Not for Resale

Technical Committee on Motor Craft

E. C. Game, *Chair*
E. C. Game Engineering, NC [SE]

Robert Adriance, Jr., *Secretary*
Boat/U.S., VA [C]

John Adey, American Boat & Yacht Council, MD [U]
Rep. American Boat & Yacht Council Inc.
Philip B. Atteberry, Great Lakes Chemical Corporation, IL [M]
Denise Beach, National Propane Gas Association, DC [IM]
Rep. National Propane Gas Association
Philip J. Cappel, U.S. Coast Guard, DC [E]
Russell Chiasson, Trident Marine Consultants, Inc., Canada [I]
William A. Colavecchio, Underwriters Laboratories Inc., NC [RT]
Desmond Connolly, Buzzards Bay, MA [I]
Rep. National Association of Marine Surveyors Inc.
Bolling F. Douglas, Marine Associates Incorporated, GA [SE]
Paul V. Fleury, Marine Services, MD [IM]
Gilles R. Gareau, Transport Canada, Canada [E]
Ralph E. Lambrecht, Independent Marine Engineer, IL [SE]
Kim I. MacCartney, Inamar, VA [I]
Thomas J. Marhevko, National Marine Manufacturers Association, IL [M]
John J. McDevitt, Drexel Hill, PA [C]
Raymond J. Of, Raymond Of Associates, NY [SE]
Donald B. Pray, Donald B. Pray Marine Surveyor, MA [SE]
Donald C. Smutz, U.S. Coast Guard Auxiliary, CA [U]
Robert J. Strople, Kidde Safety, NC [M]
Michael Taylor, Taylor Marine Services Inc., MA [SE]
Kenneth J. Weinbrecht, Ocean-Bay Marine Services, Inc., NY [I]
Rep. Society of Accredited Marine Surveyors

Alternates

Lance D. Harry, Great Lakes Chemical Corporation, RI [M]
(Alt. to Philip B. Atteberry)
William Moss, Underwriters Laboratories Inc., NC [RT]
(Alt. to William A. Colavecchio)
Bruce J. Swiecicki, National Propane Gas Association, IL [IM]
(Alt. to Denise Beach)

Nonvoting

Robert Loeser, Philomath, OR [SE]
(Member Emeritus)

Dana R. Haagensen, NFPA Staff Liaison

This list represents the membership at the time the Committee was balloted on the final text of this edition. Since that time, changes in the membership may have occurred. A key to classifications is found at the back of the document.

NOTE: Membership on a committee shall not in and of itself constitute an endorsement of the Association or any document developed by the committee on which the member serves.

Committee Scope: This Committee shall have primary responsibility for documents on fire prevention and protection of motor craft and to encourage their use by designers, builders and owners.

--`,,,,`-`-`,,`,,`,`,,`---

Copyright National Fire Protection Association
Provided by IHS under license with NFPA
No reproduction or networking permitted without license from IHS
Not for Resale

Contents

Chapter 1 Administration **302–** 5
1.1 Scope **302–** 5
1.2 Purpose **302–** 5
1.3 Application **302–** 5
1.4 Retroactivity **302–** 5
1.5 Equivalency **302–** 5
1.6 Units **302–** 5

Chapter 2 Referenced Publications **302–** 6
2.1 General **302–** 6
2.2 NFPA Publications **302–** 6
2.3 Other Publications **302–** 6

Chapter 3 Definitions **302–** 7
3.1 General **302–** 7
3.2 NFPA Definitions **302–** 7
3.3 General Definitions **302–** 7

Chapter 4 Hull **302–** 9
4.1 General Arrangement **302–** 9
4.2 Spaces Open to the Atmosphere **302–** 9
4.3 Natural Ventilation **302–** 9
4.4 Connecting Compartments or Spaces by a Natural Ventilation System **302–**10
4.5 Powered Ventilation System **302–**10
4.6 Arrangements of Openings **302–**11

Chapter 5 Engines **302–**11
5.1 Exposed Engine Surface Temperatures **302–**11
5.2 Diaphragm-Type Gasoline Pumps **302–**11
5.3 Marine Carburetors **302–**11
5.4 Electrical Components **302–**11
5.5 Air-Cooled Engines **302–**11
5.6 Portable Gasoline Tanks **302–**12
5.7 Automatic Shutdown **302–**12
5.8 High-Tension Cable **302–**12
5.9 Distributors **302–**12

Chapter 6 Engine Exhaust Systems **302–**12
6.1 General Requirements **302–**12
6.2 Materials **302–**12
6.3 Hose Connections **302–**12
6.4 Temperature Protection **302–**12

Chapter 7 Fuel Systems **302–**12
7.1 General Requirements **302–**12
7.2 Fuel Tank Materials **302–**13
7.3 Fuel Tank Design and Construction **302–**13
7.4 Fuel Tank Installation **302–**14
7.5 Fuel Lines, Fittings, and Related Accessories **302–**14

Chapter 8 Cooking, Heating, and Auxiliary Appliances **302–**16
8.1 General **302–**16
8.2 Cooking Appliance Installation **302–**16
8.3 Coal, Charcoal, and Wood-Burning Appliances **302–**17
8.4 Liquid Fuel Appliances Excluding Liquefied Petroleum Gas (LPG) Appliances **302–**17
8.5 Liquefied Petroleum Gas (LPG) and Compressed Natural Gas (CNG) Systems for Permanently Installed Appliances **302–**18
8.6 Service Water Heating Units and Cabin Heaters **302–**21
8.7 Lamps **302–**21
8.8 Electric Stoves **302–**21

Chapter 9 Electrical Systems Under 50 Volts **302–**21
9.1 Scope **302–**21
9.2 General Requirements **302–**21
9.3 Batteries **302–**22
9.4 Power Distribution System Negative Connections **302–**22
9.5 Continuously Energized Parts **302–**22
9.6 Marking **302–**22
9.7 Ambient Temperature **302–**23
9.8 Ignition Sources **302–**23
9.9 Overcurrent Protection **302–**23
9.10 Switches **302–**24
9.11 Appliances and Equipment **302–**25
9.12 System Wiring **302–**25
9.13 Wiring Installation **302–**26
9.14 Wiring Connections **302–**28
9.15 Receptacles **302–**28
9.16 Plug Connectors **302–**29

Chapter 10 Alternating Current (ac) Electrical Systems on Boats **302–**29
10.1 Scope **302–**29
10.2 General Requirements **302–**29
10.3 Marking **302–**29
10.4 System Voltage **302–**29
10.5 Ambient Temperature **302–**29
10.6 Ignition Source **302–**30
10.7 Shore Power Polarity Devices **302–**30
10.8 Overcurrent Protection **302–**30
10.9 Main Supply **302–**33
10.10 Branch Circuits **302–**36
10.11 Ground-Fault Circuit Interrupters (GFCIs) **302–**37
10.12 Appliances and Equipment **302–**37
10.13 Conductors and Flexible Cords **302–**38
10.14 Installation **302–**38

Copyright National Fire Protection Association
Provided by IHS under license with NFPA
No reproduction or networking permitted without license from IHS
Not for Resale

10.15 Receptacles **302**–40
10.16 Main Panelboard **302**–40
10.17 Alternating-Current (ac) Generators **302**–41
10.18 Isolation of Galvanic Currents **302**–41
10.19 Shore Power **302**–41
10.20 Application of Types of Shore Power Circuits **302**–41

Chapter 11 Lightning Protection **302**–42
11.1 General **302**–42

Chapter 12 Fire and Carbon Monoxide Protection Equipment **302**–42
12.1 Fire Suppression Equipment **302**–42
12.2 Carbon Monoxide Detection **302**–44
12.3 Smoke Detection **302**–44

Annex A Explanatory Material **302**–45

Annex B Portable Fire Extinguishers and Fixed Systems **302**–53

Annex C Operation and Maintenance **302**–55

Annex D Fire Warning Equipment **302**–57

Annex E Extinguisher Inspection and Maintenance Information from NFPA Standards **302**–58

Annex F Informational References **302**–62

Index **302**–63

Copyright National Fire Protection Association
Provided by IHS under license with NFPA
No reproduction or networking permitted without license from IHS
Not for Resale

NFPA 302

Fire Protection Standard for

Pleasure and Commercial Motor Craft

2004 Edition

IMPORTANT NOTE: This NFPA document is made available for use subject to important notices and legal disclaimers. These notices and disclaimers appear in all publications containing this document and may be found under the heading "Important Notices and Disclaimers Concerning NFPA Documents." They can also be obtained on request from NFPA or viewed at www.nfpa.org/disclaimers.

NOTICE: An asterisk (*) following the number or letter designating a paragraph indicates that explanatory material on the paragraph can be found in Annex A.

A reference in brackets [ ] following a section or paragraph indicates material that has been extracted from another NFPA document. As an aid to the user, the complete title and edition of the source documents for mandatory extracts are given in Chapter 2 and those for nonmandatory extracts are given in Annex F. Editorial changes to extracted material consist of revising references to an appropriate division in this document or the inclusion of the document number with the division number when the reference is to the original document. Requests for interpretations or revisions of extracted text shall be sent to the technical committee responsible for the source document.

Information on referenced publications can be found in Chapter 2 and Annex F.

Chapter 1 Administration

1.1 Scope.

1.1.1 This standard shall establish minimum requirements for the prevention of fire and explosion, and for life safety in case of fire, on boats specified in Section 1.3.

1.1.2 This standard shall establish minimum requirements for the following:

(1) Elimination of ignition sources
(2) Ventilation of accommodation spaces, fuel tanks, and machinery spaces
(3) Use of combustible materials
(4) Fire-extinguishing equipment and fire exits
(5) Control of fire-extinguishing agents in machinery spaces

1.2 Purpose.

1.2.1 The purpose of this standard shall be to minimize the loss of life and property due to fires and explosions aboard pleasure and commercial vessels.

1.2.2 The intent of this standard shall be to make motor craft as free from the hazards of fire as practicable.

1.2.3 The requirements of this standard shall be considered necessary to provide a reasonable level of protection from loss of life and property from fire and explosion and reflect the conditions and the state of the art at the time the standard was issued.

1.3 Application.

1.3.1 This standard shall apply to the following boats of less than 300 gross tons that are used for pleasure or commercial purposes:

(1) Boats that use engines for propulsion
(2) Boats that use engines for generating power
(3) Boats that use cooking, heating, or auxiliary appliances
(4) Boats that have permanently installed ignition source(s)
(5) Boats that have permanently installed electrical systems

1.3.2 This standard shall not apply to personal watercraft.

1.3.3* This standard shall not apply to the control of carbon monoxide or toxic gases as a result of internal combustion, external combustion, or appliances.

1.3.4 No requirement of this standard shall be construed as reducing applicable federal regulations.

1.4 Retroactivity. It is not intended that the provisions of this standard be applied to boats constructed or equipment installed prior to the effective date of the standard.

1.5 Equivalency. Nothing in this standard shall prevent the use of systems, methods, or devices of equivalent or superior quality, strength, fire resistance, effectiveness, durability, and safety in place of those required by the standard, provided that technical documentation is submitted to the authority having jurisdiction to demonstrate equivalency.

1.6* Units. Metric units of measurement in this standard are in accordance with the modernized metric system known as the International System of Units (SI). The liter unit, which falls outside of but is recognized by SI, is used commonly in international fire protection. These units are listed in Table 1.6 with their conversion factors.

Table 1.6 Unit Conversion Factors

Name of Unit	Unit Symbol	Conversion Factor
Millimeter	mm	1 in. = 25.4 mm
Meter	m	1 in. = 0.0254 m
Square centimeter	cm^2	1 $in.^2$ = 6.452 cm^2
Square meter	m^2	1 ft^2 = 0.093 m^2
Cubic centimeter	cm^3	1 $in.^3$ = 16.39 cm^3
Cubic meter	m^3	1 ft^3 = 0.0283 m^3
Gram	g	1 oz = 28.35 g
Liter	L	1 gal = 3.785 L
Kilopascal	kPa gauge	1 psi = 6.89 kPa gauge
Bar	bar	14.50 psi = 1 bar
Cubic meters per minute	m^3/min	1 cfm = 0.0283 m^3/min

1.6.1 If a value for a required measurement in this standard is followed by an equivalent value in metric units, the first stated value shall be regarded as the requirement, and the equivalent value that follows shall be approximate.

1.6.2 The metric unit value shall be the requirement for motor craft under the jurisdiction of Canadian authorities.

Copyright National Fire Protection Association
Provided by IHS under license with NFPA
No reproduction or networking permitted without license from IHS
Not for Resale

Chapter 2 Referenced Publications

2.1 General. The documents or portions thereof listed in this chapter are referenced within this standard and shall be considered part of the requirements of this document.

2.2 NFPA Publications. National Fire Protection Association, 1 Batterymarch Park, Quincy, MA 02169-7471.

NFPA 10, *Standard for Portable Fire Extinguishers,* 2002 edition.

NFPA 12, *Standard on Carbon Dioxide Extinguishing Systems,* 2000 edition.

NFPA 12A, *Standard on Halon 1301 Fire Extinguishing Systems,* 1997 edition.

NFPA 52, *Compressed Natural Gas (CNG) Vehicular Fuel Systems Code,* 2002 edition.

NFPA 70, *National Electrical Code®,* 2002 edition.

NFPA 255, *Standard Method of Test of Surface Burning Characteristics of Building Materials,* 2000 edition.

NFPA 303, *Fire Protection Standard for Marinas and Boatyards,* 2000 edition.

NFPA 701, *Standard Methods of Fire Tests for Flame Propagation of Textiles and Films,* 1999 edition.

NFPA 2001, *Standard on Clean Agent Fire Extinguishing Systems,* 2000 edition.

2.3 Other Publications.

2.3.1 ABYC Publications. American Boat & Yacht Council, Inc., 3069 Solomon's Island Road, Edgewater, MD 21037-1416.

ABYC A-20, *Battery Charging Devices*, July 2000.

ABYC A-24, *Carbon Monoxide Detection Systems*, 2002.

ABYC A-25, *Power Inverters*, July 2000.

ABYC A-28, *Galvanic Isolators*, July 1997.

ABYC E-4, *Lightning Protection*, December 1996.

ABYC E-11, *AC and DC Electrical Systems on Boats*, 2003.

2.3.2 AMCA Publication. Air Movement and Control Association, 30 West University Drive, Arlington Heights, IL 60004-1893.

AMCA/ANSI 210, *Laboratory Methods of Testing Fans for Rating*, 1985.

2.3.3 ANSI Publication. American National Standards Institute, 25 West 43rd Street, 4th Floor, New York, NY 10036.

ANSI Z21.57, *Recreational Vehicle Cooking Gas Appliances*, 1997.

2.3.4 ASTM Publications. American Society for Testing and Materials, 100 Barr Harbor Drive, West Conshohocken, PA 19428-2959.

ASTM A 93, *Specification for Zinc-Coated Galvanized Iron or Steel Sheets, Boils, and Butt Lengths*, 1965 edition.

ASTM A 463, *Standard Specification for Steel Sheet, Aluminum-Coated, by the Hot-Dip Process*, 2002 edition.

ASTM B 97, *Specification for Copper-Silicon Alloy Plate, Sheet, Strip, and Rolled Bar for General Purposes*, 1981 edition.

ASTM B 122, *Standard Specification for Copper-Nickel-Tin Alloy, Copper-Nickel-Zinc Alloy (Nickel Silver), and Copper-Nickel Alloy Plate, Sheet, Strip, and Rolled Bar*, 2001 edition.

ASTM B 127, *Standard Specification for Nickel-Copper Alloy (UNS N05500) Plate, Sheet, and Strip*, 1998 edition.

ASTM B 152, *Standard Specification for Copper Sheet, Strip, Plate, and Rolled Bar*, 2000 edition.

ASTM D 471, *Standard Test Method for Rubber Property-Effect of Liquids*, 1996.

2.3.5 NEMA Publication. National Electrical Manufacturers Association, 1300 North 17th Street, Suite 1847, Rosslyn, VA 22209.

NEMA/ANSI WD-6, *Wiring Devices — Dimensional Requirements*, 1988.

2.3.6 SAE Publications. Society of Automotive Engineers, 400 Commonwealth Drive, Warrendale, PA 15096.

SAE J378, *Recommended Practice for Marine Engine Wiring*, 1988.

SAE J1127, *Standard for Battery Cable*, 1995.

SAE J1128, *Standard for Low Tension Primary Cable*, 1995.

SAE J1171, *External Ignition Protection for Marine Devices.*

SAE J1928, *Devices Providing Backfire Flame Control for Gasoline Engines in Marine Applications*, 1993.

SAE J2006, *Standard on Marine Exhaust Hose*, 1995.

SAE J2031, *Standard for High Tension Ignition Cable*, 1996.

2.3.7 UL Publications. Underwriters Laboratories Inc., 333 Pfingsten Road, Northbrook, IL 60062–2096.

UL 21, *Standard for Safety LP Gas-Hose*, 1995.

UL 94, *Tests for Flammability of Plastic Materials*, 1996.

UL 103, *Standard for Safety Factory-Built Chimneys for Residential Type and Building Heating Appliances*, 1995.

UL 217, *Standard for Single and Multiple Station Smoke Alarms*, 1997.

UL 248, *Low Voltage Fuses*, 2000.

UL 310, *Standard for Electrical Quick-Connect Terminals*, 2003.

UL 489, *Standard for Safety Molded-Case Circuit Breakers and Circuit-Breaker Enclosures*, 1991.

UL 498, *Standard for Safety Attachment Plugs and Receptacles*, 1996.

UL 512, *Standard for Safety Fuseholders*, 1993.

UL 817, *Standard for Safety Cord Sets and Power-Supply Cords*, 1994.

UL 858, *Standard for Safety Household Electric Ranges*, 1993.

UL 943, *Standard for Safety Ground-Fault Circuit-Interrupters*, 1993.

UL 1059, *Standard for Terminal Blocks*, 2001.

UL 1077, *Standard for Safety Supplementary Protectors for Use in Electrical Equipment*, 1994.

UL 1111, *Standard for Safety Marine Carburetor Flame Arresters*, 1988.

UL 1128, *Standard for Safety Marine Blowers*, 1977.

UL 1129, *Standard for Safety Wet Exhaust Component for Marine Engines*, 1988.

UL 1133, *Standard for Safety Boat Circuit Breakers*, 1988.

UL 1426, *Standard for Safety Electrical Cables for Boats*, 2001.

Copyright National Fire Protection Association
Provided by IHS under license with NFPA
No reproduction or networking permitted without license from IHS
Not for Resale

UL 1500, *Standard for Safety Ignition-Protection Test for Marine Products*, 1997.

2.3.8 U.S. Government Publication. U.S. Government Printing Office, Washington, DC 20402.

Title 33, Code of Federal Regulations, 183.

Chapter 3 Definitions

3.1 General. The definitions contained in this chapter shall apply to the terms used in this standard. Where terms are not included, common usage of the terms shall apply.

3.2 NFPA Definitions.

3.2.1* Approved. Acceptable to the authority having jurisdiction.

3.2.2* Authority Having Jurisdiction (AHJ). An organization, office, or individual responsible for enforcing the requirements of a code or standard, or for approving equipment, materials, an installation, or a procedure.

3.2.3 Labeled. Equipment or materials to which has been attached a label, symbol, or other identifying mark of an organization that is acceptable to the authority having jurisdiction and concerned with product evaluation, that maintains periodic inspection of production of labeled equipment or materials, and by whose labeling the manufacturer indicates compliance with appropriate standards or performance in a specified manner.

3.2.4* Listed. Equipment, materials, or services included in a list published by an organization that is acceptable to the authority having jurisdiction and concerned with evaluation of products or services, that maintains periodic inspection of production of listed equipment or materials or periodic evaluation of services, and whose listing states that either the equipment, material, or service meets appropriate designated standards or has been tested and found suitable for a specified purpose.

3.2.5 Shall. Indicates a mandatory requirement.

3.2.6 Should. Indicates a recommendation or that which is advised but not required.

3.2.7 Standard. A document, the main text of which contains only mandatory provisions using the word "shall" to indicate requirements and which is in a form generally suitable for mandatory reference by another standard or code or for adoption into law. Nonmandatory provisions shall be located in an appendix or annex, footnote, or fine-print note and are not to be considered a part of the requirements of a standard.

3.3 General Definitions.

3.3.1 Accessible. Capable of being reached for inspection, maintenance, or removal without disturbing the permanent hull structure.

3.3.2 Accommodation Space. Space designed for living purposes.

3.3.3 Battery Cold Cranking Rating. The discharge load in amperes that a battery at 0°F (–17.8°C) can deliver for 30 seconds while maintaining a voltage of 1.2 volts per cell or higher.

3.3.4 Battery Reserve Capacity. The number of minutes for which a new, fully charged battery at 80°F (26.7°C) can be continuously discharged at 25 amperes while maintaining a voltage of 1.75 volts per cell or higher (10.5 volts for a 12-volt battery or 5.25 volts for a 6-volt battery).

3.3.5 Bonding Conductor. A normally noncurrent-carrying conductor that is intended to carry leakage current from either the ac or the dc system. Bonding conductors connect underwater metallic objects as part of any cathodic protection system and, if sized in accordance with ABYC E-4, shall be permitted to serve as lightning grounding conductors. If used, they shall be colored green or green with yellow stripe, or shall be of bare copper.

3.3.6 Butane. See 3.3.27, Liquefied Petroleum Gas (LPG).

3.3.7 Candela (cd). A unit of measure used in measuring the effective intensity of a flashing light.

3.3.8* Clean Agent. Electrically nonconducting, volatile, or gaseous fire extinguishant that does not leave a residue upon evaporation. The word "agent" as used in this document means "clean agent" unless otherwise indicated. [**2001:**1.3]

3.3.9* Compressed Natural Gas (CNG). A natural lighter-than-air gas compressed for use as a fuel that consists principally of methane in gaseous form plus naturally occurring mixtures of hydrocarbon gases.

3.3.10 Double Insulation System. An insulation system comprised of basic insulation and supplementary insulation, with the two insulations physically separated and so arranged that they are not simultaneously subjected to the same deteriorating influences (temperature, contaminants, and the like).

3.3.11* Engine Exhaust System. The means by which products of combustion are conducted from the engine exhaust manifold to an outboard terminus.

3.3.12 Engine Negative Terminal. The point on the engine at which the negative battery cable is connected.

3.3.13 Flammable Hydrocarbon Mixture. A mixture of gasoline vapor and air, or propane plus air, between the lower explosive limit (LEL) and upper explosive limit (UEL).

3.3.14 Galvanic Isolator. A device installed in series with the ac grounding (green, or green with yellow stripe) conductor of the shore power cable to block, in effect, the low voltage dc galvanic current flow, yet permit the passage of ac current normally associated with the ac grounding (green, or green with yellow stripe) conductor.

3.3.15* Galvanically Compatible Metals. Metals that are related closely to each other in the galvanic series.

3.3.16 Gross Ton. A measure of internal volume equal to 100 ft^3.

3.3.17 Ground. The electrical potential of the earth's surface. The boat's ground is established by a conducting connection (intentional or accidental) with the earth, including any conductive part of the wetted surface of a hull.

3.3.18 Grounded Conductor.

3.3.18.1 ***Alternating Current (ac) Grounded Conductor.*** A current-carrying conductor that is intentionally maintained at ground potential.

3.3.18.2 ***Direct Current (dc) Grounded Conductor.*** A current-carrying conductor connected to the side of the power source that is intentionally maintained at boat ground potential.

--`,,,,`-`-`,,`,,`,`,,`---

Copyright National Fire Protection Association
Provided by IHS under license with NFPA
No reproduction or networking permitted without license from IHS
Not for Resale

3.3.19 Ground-Fault Circuit-Interrupter (GFCI). A device intended for protection of personnel that functions to deenergize a circuit or portion thereof within an established period of time when a fault current-to-ground exceeds some predetermined value that is less than that required to operate the overcurrent protective device of that supply circuit.

3.3.20 Ground-Fault Protector (GFP). A device intended to protect equipment by interrupting the electric current to the load when a fault current-to-ground exceeds a predetermined value that is less than that required to operate the overcurrent protection device of that supply circuit.

3.3.21 Grounding Conductor.

3.3.21.1 ***Alternating Current (ac) Grounding Conductor (green or green with yellow stripe).*** A conductor, not normally carrying current, used to connect the metallic non-current carrying parts of electrical equipment to the ac system and engine negative terminal, or its bus, and to the shore ac grounding conductor through the shore power cable.

3.3.21.2 ***Direct Current (dc) Grounding Conductor.*** A normally noncurrent-carrying conductor used to connect metallic noncurrent-carrying parts of a direct current device to the engine negative terminal or its bus for the purpose of minimizing stray current corrosion.

3.3.22* Halocarbon Agent. An agent that contains as primary components one or more organic compounds containing one or more of the elements fluorine, chlorine, bromine, or iodine.

3.3.23* Halogenated Agent. Bromochlorodifluoromethane (Halon 1211), bromotrifluoromethane (Halon 1301), and mixtures of Halon 1211 and Halon 1301.

3.3.24* Ignition Protection. The design and construction of a device such that, under the designed operating conditions, the device does not initiate ignition when surrounded by a flammable hydrocarbon mixture if an ignition source causes an internal explosion, the device is incapable of releasing sufficient electrical or thermal energy to ignite a hydrocarbon mixture, and the source of ignition is hermetically sealed.

3.3.25 Ignition Source. Any item or substance capable of an energy release of a type and magnitude sufficient to ignite any flammable mixture of gases or vapors that could occur onboard the vessel.

3.3.26 Inboard Engine. Any internal combustion engine other than an outboard engine permanently mounted within the hull.

3.3.27* Liquefied Petroleum Gas (LPG). Terms "liquefied petroleum gas," "LP-Gas," and "LPG" that are synonymous and include any product composed predominantly of any of the following gaseous hydrocarbons: propane, propylene, butane, isobutane, butylenes, or a mixture thereof.

3.3.28 Machinery Space. Spaces that contain permanently installed engines for mechanical or electrical power or propulsion.

3.3.29 Motor Craft. Any boat that is propelled by other than wind or human power.

3.3.30 Open to the Atmosphere. A space or compartment that has at least 15 in.^{2} of net open area directly exposed to the atmosphere for each cubic foot of net compartment volume (0.34 m^2/m^3).

3.3.31 Overcurrent Protection Device. A device, such as a fuse or circuit breaker, designed to interrupt the circuit when the current flow exceeds a predetermined value.

3.3.32* Panelboard. An assembly of devices for the purpose of controlling or distributing, or both, electrical power on a boat.

3.3.33* Permanently Installed. Securely fastened so that tools must be used for removal.

3.3.34 Personal Watercraft. A vessel less than 13 ft (4 m) in length that uses an internal combustion engine powering a water jet pump as its primary source of propulsion and is designed to be operated by a person or persons sitting, standing, or kneeling on rather than within the confines of the hull.

3.3.35 Pigtail. An external conductor that originates within an electrical component or appliance installed by the manufacturer.

3.3.36* Polarized System (ac). A system in which the grounded (white) and ungrounded conductors are connected identically in relation to all terminals or fixture leads on all devices in the circuit, including the shore power connections.

3.3.37 Polarized System (dc). A system in which the grounded (negative) and ungrounded (positive) conductors are connected identically in relation to all terminals or leads on all devices in the circuit.

3.3.38 Propane. See 3.3.27, Liquefied Petroleum Gas (LPG).

3.3.39 Readily Accessible. Capable of being reached quickly and safely for effective use under emergency conditions without the aid of tools.

3.3.40 Self-Limiting. A device with a maximum output restricted to a specified value by its magnetic and electrical characteristics.

3.3.41* Sheath. A material used as a continuous protective covering around one or more insulated conductors.

3.3.42 Shore Power Inlet. A reverse service-type fitting designed for mounting on a boat that requires a female connector on the shore power cable in order to make the electrical connection.

3.3.43 Transformer.

3.3.43.1 ***Isolation Transformer.*** A transformer installed in the shore power supply circuit of a boat to isolate electrically all ac system conductors, including the ac grounding conductor (green, or green with yellow stripe) on the boat, from the ac system conductors of the shore power supply.

3.3.43.2 ***Polarization Transformer.*** An isolated winding transformer ("dry-type" encapsulated lighting transformer) installed in the shore power supply circuit of a boat to isolate electrically the normally current-carrying ac system conductors, but not the ac grounding conductor (green, or green with yellow stripe), from the normally current-carrying conductors of the shore power supply.

3.3.44 Trip-Free Circuit Breaker. A resettable overcurrent protection device designed so that the means of resetting cannot override the current interrupting mechanism.

3.3.45* Ventilation. The changing of air within a compartment by natural or mechanical means.

3.3.46 Watertight. So constructed that water does not enter the enclosure under test conditions specified in NEMA/ANSI 250-6, *Enclosures for Electrical Equipment (1000 Volts Maximum).*

3.3.47* Weatherproof. Constructed or protected so that exposure to the weather does not interfere with successful operation.

--`,,,,`-`-`,,`,,`,`,,`---

Copyright National Fire Protection Association
Provided by IHS under license with NFPA
No reproduction or networking permitted without license from IHS
Not for Resale

Chapter 4 Hull

4.1 General Arrangement.

4.1.1 The hull shall be arranged so that all compartments are accessible and all escape hatches are unobstructed and readily accessible.

4.1.1.1 Every boat having enclosed accommodation spaces shall have a readily accessible and unobstructed means of egress.

4.1.1.2 Every boat having enclosed accommodation spaces shall have a second accessible means of egress if it is possible for one exit to be blocked by a fire in a galley or machinery area.

4.1.1.3 The means of egress in 4.1.1.1 and 4.1.1.2 shall provide for minimum clear opening dimensions of 14 in. × 18 in. (36.8 cm × 47 cm) (rectangular); or 18 in. (45.7 cm) diameter (circular); or 270 in.^{2} (1741 cm^2) with a minimum dimension of 14½ in. (36.8 cm) (oval).

4.1.1.4 Any hatch that is required for egress shall have a means of being operated from the inside and a means of being operated from the outside when not secured from the inside.

4.1.1.5 All hinged hatches shall have a means or method to support the hatch in an open position.

4.1.2* Bulkheads or enclosures shall be installed between machinery spaces and accommodation spaces.

4.1.3 Bulkheads or enclosures required in 4.1.2 shall be continuous, except for necessary penetrations, to minimize the escape of fire-extinguishing agents discharged into the machinery space.

4.1.4 The requirements of 4.1.4 shall apply to boats other than boats using diesel fuel only.

4.1.4.1 Bilges of spaces containing fuel lines and fuel line fittings shall be separated from bilges of accommodation spaces and other enclosed spaces containing sources of ignition by bulkheads that shall not permit more than 0.25 fl oz (7.4 ml) of leakage per hour when the liquid in the bilge is at a height of 12 in. (30 cm) or one-third the maximum height of the bulkhead, whichever is less.

4.1.4.2 Above heights of 12 in. (30 cm) or one-third the maximum height, the bulkhead shall be permitted to have openings for the passage of conductors, piping, ventilation ducts, mechanical equipment, doors, hatches, and access panels, provided that the maximum annular space around each item is not greater than ¼ in. (6.4 mm).

4.1.5 Machinery spaces shall be readily accessible.

4.1.6 Thermal and Acoustical Insulation.

4.1.6.1 Materials used for thermal and acoustical insulation in any compartment or enclosure containing an internal combustion engine or heater shall have a flame spread index of 75 or less.

4.1.6.2 Material shall be labeled or listed as having been tested to meet the requirements of NFPA 255, *Standard Method of Test of Surface Burning Characteristics of Building Materials.*

4.1.6.3 Materials used for thermal and acoustical insulation shall not disintegrate in the presence of hydrocarbon vapor.

4.1.6.4 Materials used for thermal and acoustical insulation shall be designed and installed such that hydrocarbon vapors cannot accumulate within the material and thereby reduce its flame spread rate.

4.2 Spaces Open to the Atmosphere.

4.2.1 Spaces Connected to Spaces Open to the Atmosphere.

4.2.1.1 Compartments or spaces connecting with engine or portable fuel tank spaces that are open to the atmosphere shall require ventilation if the connecting space has an open area of less than 15 in.^{2}/ft^3 (0.34 m^2/m^3) of its net volume.

4.2.1.2 The open area in 4.2.1.1 shall be open either to the atmosphere or to another open space, provided that, for the combined net volumes of the connecting spaces, there is a total area open to the atmosphere of at least 15 in.^{2}/ft^3 (0.34 m^2/m^3).

4.2.2 Long, narrow spaces formed by side panels or accommodation floors shall have openings at both ends or along the sides if they are to be considered open to the atmosphere.

4.3* Natural Ventilation.

4.3.1 Each compartment not open to the atmosphere shall be provided with a natural ventilation system where such a compartment contains any of the following:

(1) Permanently installed gasoline engine
(2) Portable fuel tank that vents into the compartment
(3) Gasoline tank and an electrical component without ignition protection

4.3.2* Space under a motor well in outboard boats not open to the atmosphere, that is large enough to accommodate a 6 gal (23 L) portable fuel tank but is not intended for such usage, shall be labeled to prohibit its use for fuel storage.

4.3.3 Each natural ventilation system shall be constructed with at least one intake and one exhaust opening that shall be located on the boat's exterior surface.

4.3.4* Each compartment requiring natural ventilation shall be equipped with an exhaust duct(s) originating in the lower third of the compartment, with the duct opening permanently fixed above the normal accumulation of bilge water.

4.3.5 If the compartment requiring natural ventilation is an engine compartment, the exhaust duct(s) shall be located as near below the engine(s) as practicable.

4.3.6 An exhaust duct fitted with a cowl or its equivalent shall face aft.

4.3.7 Air intake openings inside a compartment shall be separated from exhaust duct openings inside the compartment by at least 24 in. (610 cm), compartment dimensions permitting.

4.3.8 The minimum aggregate internal cross-sectional area of intake ducts or openings shall be as shown in Figure 4.3.8.

4.3.9 The minimum aggregate internal cross-sectional area of exhaust ducts or openings shall be calculated in the same manner as for intakes. *(See 4.3.8.)*

4.3.10* Duct size shall be based on nominal diameters and shall be at least 2½ in. (64 mm) in diameter.

4.3.11* Duct openings shall be of at least equivalent cross-sectional area of the duct.

--`,,,,`-`-`,,`,,`,`,,`---

Copyright National Fire Protection Association
Provided by IHS under license with NFPA
No reproduction or networking permitted without license from IHS
Not for Resale

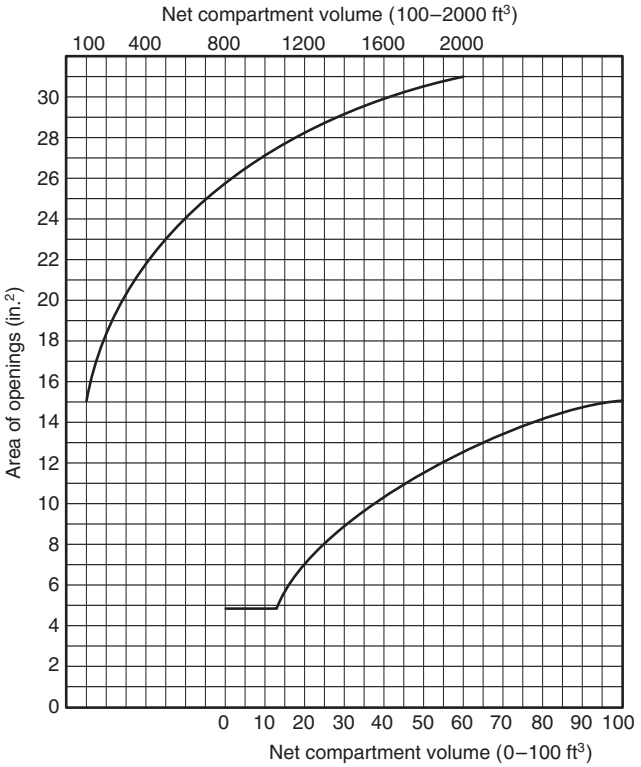

Note: The values in Figure 4.3.8 are based on the following equation: $A = 5 \log_e \left(\frac{V}{5}\right)$

FIGURE 4.3.8 Area of Openings.

4.3.12 The minimum cross-sectional area of terminal fittings for flexible ventilation ducts shall be not less than 80 percent of the required internal cross-sectional area of the flexible ventilation duct.

4.4 Connecting Compartments or Spaces by a Natural Ventilation System.

4.4.1 A natural ventilation system shall be provided for each compartment in a boat, except those open to the atmosphere, that contains any of the following:

(1) Permanently installed gasoline engine
(2) Permanently installed fuel tank and an electrical component without ignition protection
(3) Portable fuel tank
(4) Nonmetallic fuel tank that has an aggregate permeability rate exceeding 0.04 oz (1.2 g) of fuel loss in 24 hours per cubic foot of net compartment volume using reference fuel "C" at 104°F ± 36°F (40°C ± 2°C) from ASTM D 471, *Standard Test Method for Rubber Property-Effect of Liquids*
(5) If no tank described in 4.4.1(4) is present, openings between the compartment and a compartment that requires ventilation where the aggregate area of such openings exceeds 2 percent of the area between the compartments

4.4.2 Each required supply opening shall be located on the exterior surface of the boat.

4.4.3 An accommodation compartment located above a compartment requiring ventilation that is separated from the compartment requiring ventilation by a deck or other enclosure shall not be considered a connecting compartment.

4.5 Powered Ventilation System.

4.5.1 Each compartment not open to the atmosphere that has a permanently installed gasoline engine with a cranking motor shall be ventilated by an exhaust blower.

4.5.2 Blowers.

4.5.2.1 Blowers shall be designed for continuous operation at 120 percent of nominal voltage.

4.5.2.2* Blowers shall meet the external ignition protection requirements of UL 1128, *Standard for Safety Marine Blowers*, or UL 1500, *Standard for Safety Ignition-Protection Test for Marine Products*.

4.5.2.3 Blowers shall be rated for airflow in cubic feet per minute, at nominal voltage, in accordance with Figure 12 of AMCA/ANSI 210, *Laboratory Methods of Testing Fans for Rating*, or UL 1128, *Standard for Safety Marine Blowers*. *(See Figure 4.5.3.1.)*

4.5.3 Installation of Powered Ventilation.

4.5.3.1 Blower(s) capacity shall be selected in accordance with the blower capacity curve in Figure 4.5.3.1.

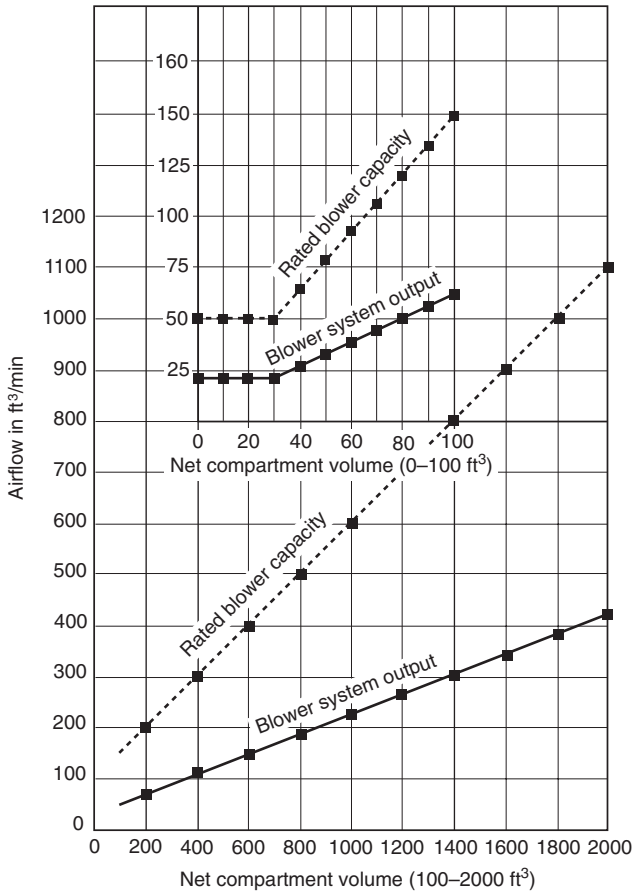

Note: The blower capacity curve is included for informational purposes and represents the average relationship of capacity to performance.

FIGURE 4.5.3.1 Minimum Blower Capacity and System Performance.

--`,,,,`,-`-`,,`,,`,`,,`---
Copyright National Fire Protection Association
Provided by IHS under license with NFPA
No reproduction or networking permitted without license from IHS
Not for Resale

4.5.3.2 More than one blower shall be permitted to be installed to meet the requirements of 4.5.3.1.

4.5.3.3 As installed, the blower system(s) shall exhaust air from the boat at a rate in accordance with the system performance curve (blower system output) in Figure 4.5.3.1 when the engine is not operating and the blower is operating at the electrical system's nominal voltage.

4.5.3.4 Blowers that are not submersible blower motors shall be mounted above the normal level of accumulated bilge water.

4.5.3.5 Blowers shall be installed with ducts having intake openings that meet the following criteria:

(1) They shall be permanently secured.
(2) They shall be located in the lower third of the compartment.
(3) They shall be located above the normal level of accumulated bilge water with the boat at rest.
(4) They shall be located as near below the engine(s) that they serve as practicable.

4.5.3.6 Electrical wiring shall be installed in accordance with Chapter 9 or Chapter 10.

4.5.3.7 Warning Label.

4.5.3.7.1 Each boat that requires a powered ventilation system shall display a warning label located in plain view of the operator and located as close as practicable to each ignition switch (including auxiliary equipment).

4.5.3.7.2 The warning label required by 4.5.3.7.1 shall contain at a minimum the following informational elements:

WARNING: Gasoline vapors can explode, resulting in injury or death.
Before starting engine:
(1) Check engine compartment bilge for gasoline or vapors.
(2) Operate blower for 4 minutes.
(3) Verify blower operation.

4.6 Arrangements of Openings.

4.6.1 Ventilation openings shall be located to prevent the entrance of water in amounts that could impair the stability or handling of the vessel or that could cause machinery malfunction under normal operating conditions.

4.6.2 External openings of intakes and exhausts shall be located to minimize the re-entry of exhausted fumes.

4.6.3* Fuel Vapors.

4.6.3.1 External openings of intakes and exhausts shall be located and oriented to prevent entry of fuel vapors.

4.6.3.2 The location of intake and exhaust ventilation openings shall be no less than 15 in. (38 cm) from the fuel fill and fuel vent fittings, as measured in a straight line or across any intervening surface(s).

4.6.4 Ventilation openings shall be unobstructed by side curtains, cockpit enclosures, dodgers, and other weather enclosures.

Chapter 5 Engines

5.1 Exposed Engine Surface Temperatures.

5.1.1 Exposed engine surfaces, except the surfaces addressed in 5.1.2, shall not exceed 200°F (94°C) under normal operating conditions.

5.1.2 The requirements of 5.1.1 shall not apply to short branch connections between liquid-cooled exhaust manifolds and cylinder head exhaust ports or to hot spots on intake manifolds.

5.1.3 An audible or visual device shall be installed to warn of engine temperatures that exceed 200°F (94°C).

5.2 Diaphragm-Type Gasoline Pumps.

5.2.1 Gasoline engine fuel pumps of the diaphragm type shall be designed so that fuel shall not be released to the engine space if a primary diaphragm failure occurs.

5.2.2 Gasoline engine fuel pumps of the diaphragm type shall be provided with a means to determine that a diaphragm failure has occurred without dismantling the fuel pump.

5.3* Marine Carburetors.

5.3.1 Marine carburetors shall not leak more than 0.17 fl oz (5 ml) of fuel in 30 seconds under either of the following conditions:

(1) When the float valve is open, the carburetor is at half throttle, and the engine is cranked without having been started
(2) When the fuel pump is delivering the maximum pressure specified by its manufacturer

5.3.2 Each updraft and horizontal draft carburetor shall have a device that performs the following functions:

(1) Collects and holds fuel that flows out of the carburetor venturi section toward the air intake
(2) Prevents collected fuel from being carried out of the carburetor assembly by the shock wave of a backfire or by reverse airflow
(3) Returns collected fuel to the engine induction system after the engine starts

5.3.3* Spark ignition engine air intakes shall be fitted with one of the following means of backfire flame control:

(1) Backfire flame control approved by the U.S. Coast Guard and bearing a U.S. Coast Guard approval number
(2) Backfire flame control meeting the requirements of UL 1111, *Standard for Safety Marine Carburetor Flame Arresters*
(3) Backfire flame control meeting the requirements of SAE J1928, *Devices Providing Backfire Flame Control for Gasoline Engines in Marine Applications*
(4) An engine-air and fuel induction system that provides adequate protection from propagation of backfire flame to the atmosphere equivalent to that provided by an acceptable backfire flame arrester and includes a reed valve assembly

5.4 Electrical Components. Electrical components for engines shall comply with the applicable provisions of Chapter 9 and Chapter 10.

5.5 Air-Cooled Engines.

5.5.1 Permanently installed air-cooled engines with self-contained fuel systems shall be located only on open decks or on cabin tops.

5.5.2 Any housing over engines addressed in 5.5.1 shall be open whenever the engine is operating.

5.5.3 Enclosed Air-Cooled Engines.

5.5.3.1 Factory installed engine air-cooling shrouding shall be constructed and mounted for enclosed air-cooled engines

Copyright National Fire Protection Association
Provided by IHS under license with NFPA
No reproduction or networking permitted without license from IHS
Not for Resale

to trap all engine-cooling air and lead it to a point from which it can be discharged outside the hull or engine box by means of ducting.

5.5.3.2 Duct Material.

5.5.3.2.1 Ducts for engine-cooling air shall have a flame spread index of 75 or less.

5.5.3.2.2 Material used for ducts for engine-cooling air shall be labeled or listed as having been tested to meet the requirements of NFPA 255, *Standard Method of Test of Surface Burning Characteristics of Building Materials*.

5.5.3.3 Engine-cooling air shall not be used as a direct source for heating accommodation spaces.

5.6 Portable Gasoline Tanks. Portable gasoline engines with integral fuel tanks or portable gasoline fuel tanks shall be stowed securely in an open or ventilated space in accordance with Sections 4.2 and 9.8 so that fuel or vapors cannot reach interior spaces.

5.7 Automatic Shutdown. Nonpropulsion engines intended for automatic operation shall be equipped with an automatic shutdown device actuated by low oil pressure, excessive engine overheat, and excess heat from exhaust pipe or exhaust gas ducting.

5.8* High-Tension Cable. High-tension cable assemblies shall conform to SAE J2031, *Standard for High Tension Ignition Cable*.

5.9* Distributors. Ignition distributors shall conform to UL 1500, *Standard for Safety Ignition-Protection Test for Marine Products*.

Chapter 6 Engine Exhaust Systems

6.1 General Requirements.

6.1.1 Exhaust systems shall comply with the following:

(1) They shall be gastight to hull interiors.
(2) All connections shall be accessible.
(3) They shall be supported to minimize failure from vibration, shock, expansion, and contraction.
(4) They shall have no threaded fittings into nonmetallic exhaust system components.
(5) They shall have no discharge from other devices into the exhaust other than from engine-cooling water.

6.1.2 Wherever personnel or combustibles can come in contact with hot surfaces, effective protection shall be provided by water-jacketing, lagging, or shielding, or by guards or engine enclosures.

6.1.3 Exhaust Supports.

6.1.3.1 For wet exhaust systems, hangers, brackets, or other means used to support metallic exhaust systems shall be noncombustible within 6 ft (1.8 m) of the engine connection(s).

6.1.3.2 For dry exhaust systems, hangers, brackets, or other means used to support metallic exhaust systems shall be noncombustible.

6.1.4 Except for outboard engines, a means to indicate loss of exhaust-cooling water shall be provided so that it is effective at all helm positions.

6.1.5 Non-propulsion engines shall be permitted to use an automatic shutdown device to meet the requirements of 6.1.4.

6.1.6 A separate exhaust system shall be provided for each engine.

6.2 Materials.

6.2.1 Materials used in engine exhaust systems, except in components addressed in 6.2.3 and 6.2.4, shall be resistant to fuels, heat, water, corrosion, and the products of combustion.

6.2.2 Nonmetallic exhaust system components, except for those components addressed in 6.2.3 and 6.2.4, shall meet the requirements of UL 1129, *Standard for Safety Wet Exhaust Components for Marine Engines*, or SAE J2006, *Standard on Marine Exhaust Hose*, and shall be so marked.

6.2.3 The requirements of 6.2.1 and 6.2.2 shall not apply to components furnished as part of an original equipment manufactured (OEM) engine assembly.

6.2.4 The requirements of 6.2.1 and 6.2.2 shall not apply to components of stern-drive and jet-drive installations where exhaust is discharged through the drive system.

6.2.5 Copper shall not be used in contact with dry diesel exhaust gases or within six pipe diameters downstream from the point of water entry in water-cooled exhaust systems.

6.2.6 As installed, nonmetallic exhaust system components shall retain watertight integrity for 2 minutes after a total loss of cooling water, with the engine operating at full power.

6.3 Hose Connections. Except for single-clamped hose furnished for specific use as part of an OEM engine assembly, hose connections shall be double clamped.

6.4 Temperature Protection. The exhaust turbine side of nonwater-jacketed turbochargers and unjacketed, single-wall, dry exhaust components shall be installed so that the temperature of adjacent combustible surfaces shall not exceed 200°F (94°C).

Chapter 7 Fuel Systems

7.1 General Requirements.

7.1.1 Scope.

7.1.1.1 The requirements of this chapter shall apply to the design, construction, choice of materials, and installation of permanently installed fuel systems, except compressed gas, that run from the fuel fill opening to the connections at each engine or at auxiliary equipment.

7.1.1.2 The requirements of this chapter shall apply to all tanks that are permanently installed.

7.1.2 Any tanks with a capacity of more than 7 gal (27 L) shall be permanently installed.

7.1.3 Fuel systems shall be liquidtight and vaportight with respect to hull interiors.

7.1.4 Individual system components and the system as a whole shall be designed and installed to withstand the stresses of and exposure to marine service including pressure, vibration, shock, movement, grease, lubricating oil, bilge solvents, high aromatic fuels, and corrosive environments.

Copyright National Fire Protection Association
Provided by IHS under license with NFPA
No reproduction or networking permitted without license from IHS
Not for Resale

7.1.5 Exposure Fire Protection.

7.1.5.1 As installed in the boat, all individual components of the fuel system, except for the components identified in 7.1.5.2 and 7.1.5.3, shall be capable of withstanding a 2½-minute exposure to free-burning fuel without a failure that results in leakage of liquid or vapor.

7.1.5.2 Fuel distribution lines on boats shall not be required to comply with 7.1.5.1 if a break at any point in the line will cause a discharge of not more than 5.0 fl oz (150 ml) of fuel within 2½ minutes. *(See 7.5.1.5.)*

7.1.5.3 Self-draining fuel tank vent hose located outside the engine compartment shall not be required to comply with 7.1.5.1.

7.1.6 To ground static electricity, the resistance between ground and each metallic or metallic-plated component of the fuel fill system and fuel tank that is in contact with fuel shall be less than 1 ohm.

7.1.7 Pressurized fuel tanks shall not be used.

7.2 Fuel Tank Materials.

7.2.1 Hull Integration.

7.2.1.1 Gasoline Tanks. Gasoline fuel tanks shall not be integral with the hull structure.

7.2.1.2 Diesel Tanks.

7.2.1.2.1 Diesel tanks shall be permitted to be integral with the hull structure.

7.2.1.2.2 If cored composite construction is used where the tank is integral with the hull structure, the core material shall not deteriorate due to contact with diesel fuel and shall not permit diesel fuel to migrate.

7.2.2 Corrosion Resistance.

7.2.2.1 Materials for fuel tanks shall be corrosion resistant.

7.2.2.2 Materials shall meet the specifications of Table 7.2.2.2.

7.2.2.3 The following shall apply to steel tanks used for fuel:

(1) Unless constructed of aluminized steel, they shall be galvanized inside and outside by the hot-dip process for other than diesel fuel tanks.
(2) Unless constructed of aluminized steel, they shall be galvanized on the outside only by the hot-dip process for diesel fuel tanks.
(3) They shall not be constructed of terneplate steel.

7.2.2.4 Aluminized steel tanks with a wall thickness of less than 0.0785 in. (2 mm) shall be installed only above the cockpit floor or above the deck if no clearly defined cockpit exists.

7.2.2.5 Stainless Steel Diesel Fuel Tanks.

7.2.2.5.1 Stainless steel diesel fuel tanks, except those identified in 7.2.2.5.2, shall have a wall thickness of not less than 0.0747 in. (14 gauge).

7.2.2.5.2 Stainless steel fuel tanks that are both less than 20 gal (76 L) capacity and of cylindrical construction with domed heads shall require a wall thickness of not less than 0.031 in. (22 gauge).

7.2.2.5.3* Stainless steel tanks shall be supported to avoid crevice and pitting corrosion from entrapment of moisture by means of welded brackets of like material or other support material permanently bonded to the tank surface with impermeable nonhygroscopic adhesive.

7.2.3 Nonmetallic materials meeting the applicable requirements of Chapter 4 and Chapter 7 shall be permitted to be used for tanks. *[See 4.4.1(4).]*

7.3 Fuel Tank Design and Construction.

7.3.1 The following shall apply to fuel tanks other than diesel fuel tanks:

(1) The bottom, sides, and ends shall not have openings.
(2) Openings for fill, vent, and feed pipes and level gauges, if installed, shall be at or above the topmost surface of tanks.
(3) Clean-out plates shall not be installed.
(4) Plates used for fittings shall be secured in such a manner that they cannot be used for clean-out purposes.

7.3.2 Tanks shall be constructed so that, when installed, exterior surfaces shall not trap water.

7.3.3 Threaded fittings shall conform to Table 7.3.3.

7.3.4 Fuel tanks with a capacity of 25 gal (95 L) or greater shall not leak when subjected to the pressure impulse test requirement of 33 CFR 183.586.

Table 7.2.2.2 Metallic Fuel Tank Material and Fabrication Requirements for Corrosion Resistance

Material[a]	Specification	Minimum Nominal Sheet Thickness	Gauge
Nickel-copper	ASTM B 127, Class A	0.031 in. (0.79 mm)	22 U.S. Std.
Copper-nickel	ASTM B 122	0.045 in. (1.14 mm)	17 AWG
Copper	ASTM B 152, Type E.T.P.	0.057 in. (1.45 mm)	15 AWG
Copper-silicon	ASTM B 97, Types A, B, and G	0.050 in. (1.27 mm)	16 AWG
Steel sheet	ASTM A 93	0.0747 in. (1.90 mm)	14 Mfrs.
Aluminized steel	ASTM A 463	0.0478 in. (1.21 mm)	18 Mfrs.
Aluminum	Alloy 5052, 5083, or 5086	0.090 in. (2.29 mm)	—
Stainless steel	316L or 317L	0.0747 in. (1.90 mm)	14 Mfrs.
		0.031 in. (0.79 mm)[b]	22 U.S. Std.[b]

[a]See American Welding Society recommendations for welding processes.
[b]Only cylindrical stainless steel tanks with domed heads and a capacity of less than 20 gal (76 L) are permitted.

Copyright National Fire Protection Association
Provided by IHS under license with NFPA
No reproduction or networking permitted without license from IHS
Not for Resale

Table 7.3.3 Minimum Thread Engagement

Thread Engagement (in.)	Minimum Length of IPS (in.)
¼	⅜
⅜	⅜
½	½
¾	9⁄16
1	⅝
1¼	⅝
1½	⅝
2	1 1⁄16

Note: For SI units, 1 in. = 2.5 cm.

7.3.5 Fuel tanks with a capacity of less than 25 gal (95 L) shall not leak when subjected to the shock test requirement of 33 CFR 183.584.

7.3.6 Fuel tanks with a capacity of 200 gal (760 L) or more shall not leak when subjected to the slosh test requirement of 33 CFR 183.588.

7.3.7 All metal tanks and the metal fitting plates of nonmetallic fuel tanks shall be provided with a bonding terminal suitable for the attachment of a No. 8 AWG bonding conductor.

7.3.8 Indentations for labeling or other identification shall not weaken the fuel tank.

7.3.9 Fuel tanks shall be marked or identified permanently with the following information in a location that is visible and readable for inspection after installation:

(1) Manufacturer's name or logo and address
(2) Month (or lot or serial number) and year of manufacture
(3) Capacity in U.S. gallons (capacity also shall be permitted to be expressed in liters)
(4) Construction material and thickness
(5) Fuel for which tank is intended
(6) Maximum test pressure
(7) Model number, if applicable
(8) Statement on tanks other than diesel tanks that reads, "This tank has been tested under 33 CFR 183.510(a)."
(9) Statement that reads, "Must be installed aft of the half-length of the boat," if the tank has been tested under 33 CFR 183.584, at less than 25 G vertical accelerations

7.3.10 Fuel tank(s) shall be tested by the manufacturer or builder for fuel tightness at 3.0 psi (21 kPa gauge) or 1½ times the maximum static head to which the tank(s) can be subjected during service as specified by the boat manufacturer, whichever is greater.

7.3.11 The design of the pickup tube shall preclude damage to the tank bottom as the tank flexes while in service.

7.3.12 The use of gauge glasses shall be restricted to day tanks and service tanks of diesel fuel systems.

7.4 Fuel Tank Installation.

7.4.1 Fuel tank connections and fittings shall be accessible.

7.4.2 Fuel tanks, other than diesel fuel tanks integral with the hull, shall be installed in such a manner that means for maintenance or replacement is provided or indicated so that it can be accomplished without compromising the structural integrity of the vessel.

7.4.3 Fuel tanks shall be installed in a manner that prevents permanent deformation.

7.4.4 Fuel tanks shall be installed in a manner that provides immobilization to the extent practicable.

7.4.5 Nonmetallic fuel tanks that expand dimensionally after exposure to fuel shall comply with the following:

(1) They shall be installed in accordance with the fuel tank manufacturer's instructions
(2) The fuel tank manufacturer's instructions shall indicate the installation clearances required for the tank in diagram form.
(3) They shall be provided with a warning label that contains at a minimum the following informational elements:

CAUTION: To prevent hull and tank damage due to expansion of the tank while in service, installation shall be in accordance with the manufacturer's instructions.

7.4.6 Contact between metallic fuel tanks and other structures shall be limited to necessary structural supports and shall permit free circulation of air.

7.4.7 Abrasive surfaces and absorbent surfaces of tank supports and braces shall be insulated effectively from contact with tank surfaces by a nonabrasive and nonabsorbent material.

7.4.8 Aluminized steel tanks of thicknesses less than 0.0785 in. (2 mm) shall be installed above the cockpit deck or above deck if there is no clearly defined cockpit.

7.4.9 Nonferrous and nonmetallic fuel tanks shall be permitted to be foamed in place if they comply with the requirements of 33 CFR 183.516. *(See 7.4.5.)*

7.4.10 Fuel tanks shall not be installed above the engine and shall not be installed above sources of ignition.

7.4.11 Fuel tank(s) shall not support a deck, a bulkhead, or other structure.

7.5 Fuel Lines, Fittings, and Related Accessories.

7.5.1 General.

7.5.1.1 For the purposes of Section 7.5, fuel lines shall mean all pipes, tubing, or hose that conduct fuel from the deck fill plate to the engine connection.

7.5.1.2 For the purposes of Section 7.5, related accessories shall include any attachments to fuel lines such as valves, filters, strainers, pumps, and connecting fittings.

7.5.1.3 All fuel tank fittings shall be galvanically compatible with the fuel tank material.

7.5.1.4 Copper-bearing fittings shall be isolated from aluminum tanks by a galvanic barrier including, but not limited to, a 300 series stainless steel fitting.

7.5.1.5 Flexible nonmetallic fuel hose shall be one of the following:

(1) USCG Type A-1 or Type A-2 hose where 2½-minutes minimum fire resistance is required
(2) USCG Type A-1, Type A-2, Type B-1, or Type B-2 hose where 2½-minutes minimum fire resistance is not required *(see 7.1.5)*

Copyright National Fire Protection Association
Provided by IHS under license with NFPA
No reproduction or networking permitted without license from IHS
Not for Resale

7.5.1.6 Fuel lines, connections, and accessories shall be accessible.

7.5.1.7* Plastic Components.

7.5.1.7.1 Plastic pipe and plastic fittings shall not be used in fuel distribution lines, vent lines, and fill lines unless permitted by 7.5.1.7.2 or 7.5.1.7.3. *(See 7.1.5.)*

7.5.1.7.2 Components of deck fill fittings, vent fillings, carburetor fittings, fuel pump fittings, and fuel filter fittings shall be permitted to be of plastic.

7.5.1.7.3 Engineering grade plastics, such as glass-reinforced nylons, shall be permitted to be used in fuel distribution lines, vent lines, and fill lines.

7.5.1.8 Fuel lines shall be secured against movement or vibration by the use of noncombustible clips or straps without rough surfaces or sharp edges.

7.5.1.9 Clips and straps used to hold fuel lines in position to maintain anti-siphon protection shall be capable of withstanding a 2½-minute fire test.

7.5.1.10 Gasoline-resistant sealing compound or tape shall be used in making up threaded pipe connections.

7.5.1.11 Where making flared tubing connections, the following criteria shall be met:

(1) Tubing shall be cut squarely and flared by tools designed for that purpose.
(2) Tubing shall be deburred prior to being flared.
(3) Copper tubing shall be annealed prior to being flared.

7.5.1.12 Outlets.

7.5.1.12.1 Outlets for drawing fuel from the system are prohibited unless permitted by 7.5.1.12.2.

7.5.1.12.2 Filter bowl plugs provided for the purpose of servicing only shall be permitted.

7.5.1.13 Manually Operated Valves.

7.5.1.13.1 Manually operated multiposition valves shall be required to indicate only their open and closed positions.

7.5.1.13.2 Manually operated stop valves shall be designed with positive stops in the open and closed positions.

7.5.2 Installation of Fill and Vent Pipes.

7.5.2.1 Fuel tank fill and vent pipes shall be located in the following manner:

(1) To prevent the escape of liquid and vapor overflow to the inside of the hull
(2) To provide protection from the flow of vapors escaping into the hull

7.5.2.2 No liquid fuel shall enter the boat from the fill due to an overflow rate of 5 gpm (19 L/min) for 5 seconds when the boat is in its static floating position.

7.5.2.3 The vent pipe shall terminate at least 15 in. (38 cm) from any hull opening.

7.5.2.4* The vent shall be installed to minimize the intake of water without resisting the release of vapor.

7.5.2.5 Overflow from the vent at a rate of 2 gpm (7.7 L/min) shall not enter the boat.

7.5.2.6 The inside diameter of the fill pipe system shall be no less than 1¼ in. (3.2 cm) and shall have a hose diameter of no less than 1½ in. (3.8 cm).

7.5.2.7 The fuel fill shall be self-draining from the fuel fill inlet to the tank connection.

7.5.2.8 The fuel fill plate shall be identified by a permanent marking indicating the type of fuel.

7.5.2.9 Hose Clamps.

7.5.2.9.1 If a nonmetallic hose is used in the fill pipe system, it shall be secured tightly with a minimum of two corrosion-resistant metal clamps of ½ in. (12.7 mm) minimum width at each end of the hose.

7.5.2.9.2 Clamps depending solely on spring tension shall not be used to meet the requirements of 7.5.2.9.1.

7.5.2.10* Bonding wire ends shall not be clamped between the fill pipes and the flexible tubing. *(See 7.1.6.)*

7.5.2.11 No blow-back of fuel through the fill fitting shall occur while filling at a rate of 9 gpm (35 L/min) and to a level of one-quarter to three-quarters of the capacity indicated by the tank label.

7.5.2.12 As installed in the boat, the vent pipe connection shall be at the highest point of the tank under conditions of normal trim.

7.5.2.13 The inside diameter at any location in the vent line system shall be not less than 7/16 in. (11 mm).

7.5.2.14 The fittings at the hull vent line opening shall be corrosion resistant.

7.5.2.15 Each fuel tank vent system shall have a flame arrester that can be cleaned unless one of the following conditions is met:

(1) The vent system itself is a flame arrester.
(2) Metallic vent lines are used and serve as effective flame arresters.

7.5.3* Installation of Fuel Feed Lines and Accessories.

7.5.3.1* Electric fuel supply pumps, other than priming pumps in outboard motor fuel systems, shall operate only under the following conditions:

(1) The engine is operating.
(2) The cranking motor is energized.
(3) The supply pump is operated by a momentary switch for priming and is located either on or within 12 in. (30 cm) of the engine.

7.5.3.2 Hose installed on the pressure side of an electric fuel supply pump shall be USCG Type A-1.

7.5.3.3 Fuel lines shall be run with as few connections as practicable.

7.5.3.4 Fuel lines that run over dry sections of the engine exhaust system shall be metallic and shall contain no joints, fittings, or components other than at the point of termination.

7.5.3.5 Gasoline fuel distribution systems shall be provided with anti-siphon protection by at least one of the following methods:

(1) All parts of fuel distribution and return lines are installed above the level of the tank top from the tank to the carburetor inlet or its equivalent (e.g., throttle body, port fuel injection).

--`,,,,`-`-`,,`,,`,`,,`---

Copyright National Fire Protection Association
Provided by IHS under license with NFPA
No reproduction or networking permitted without license from IHS
Not for Resale

(2) All parts of fuel distribution and return lines are installed above the level of the tank top from the tank to a location where fuel leakage cannot enter the boat when the boat is in a static floating position.
(3) An anti-siphon device is installed at the tank withdrawal fitting, or along the line, with a rated siphon protection head and flow rate greater than required for the installation.
(4) An electrically operated valve is installed at the tank fitting, or along the line, that is to be energized open only when the engine ignition switch is on and the engine is running, with a momentary type override permitted to be used for starting.
(5)*A manual shutoff valve is installed directly at the fuel tank connection, arranged to be readily accessible for operation from outside the compartment if the fuel tank top is located below the level of the carburetor inlet, the fuel line is rigid metal or USCG Type A-1 hose, and the length of the fuel line from the tank outlet to the engine inlet is no more than 12 ft (3.6 m).
(6) A manual shutoff valve shall be installed directly at the fuel tank connection, arranged to be readily accessible for operation from outside the compartment if the fuel tank top is located below the level of the carburetor inlet, the fuel line is rigid metal or USCG Type A-1 hose, a manual shutoff valve is installed at the fuel inlet connection to the engine, and the length of the fuel line from the tank outlet to the engine inlet is more than 12 ft (3.6 m).

7.5.3.6 Systems Without Anti-Siphon Protection.

7.5.3.6.1* A readily accessible manual shutoff valve shall be installed on all fuel tanks directly at the tank connection where the fuel system is without anti-siphon protection.

7.5.3.6.2 If the fuel tank is located in a machinery space, a remotely operated means of closing the valve required in 7.5.3.6.1, without opening machinery spaces, shall be provided.

7.5.3.7 A flexible section, meeting the requirements of 7.5.1.5, shall be installed to separate the part of the fuel feed line secured to the hull members from the part of the fuel feed line secured to the engine.

7.5.3.8 The fixed fuel line shall be fastened to structures within 4 in. (10 cm) of the connection to the flexible section to secure against vibration and movement.

Chapter 8 Cooking, Heating, and Auxiliary Appliances

8.1* General.

8.1.1 Instructions.

8.1.1.1 Printed instructions for proper installation, operation (including refueling, where applicable), and maintenance shall be provided with each appliance.

8.1.1.2 The instructions required in 8.1.1.1 shall include the following information:

(1) The hazards associated with appliance air consumption
(2) Installer information regarding the proper display of a warning label

8.1.2 Appliances using gasoline in liquid or solid form for priming or fuel shall be prohibited.

8.1.3* The design and installation of appliances shall address the air consumption of the appliances and the venting of exhaust products.

8.1.4 An appliance shall be mounted in accordance with the manufacturer's instructions.

8.1.5 Appliances shall be fastened securely when in use or stored.

8.1.6 A burner system shall meet the following criteria:

(1) It shall be capable of operation without creating a fire hazard during periods of boat pitch and roll at angles up to 30 degrees from horizontal in any direction sustained for 15 seconds.
(2) It shall be capable of continuous operation at angles of heel up to 30 degrees.

8.1.7 Label.

8.1.7.1 A durable and permanently legible label shall be provided detailing the proper operation and any unique hazards of the appliance.

8.1.7.2 The label required in 8.1.7.1 shall be mounted in plain view of the appliance operator.

8.1.8 Appliance operating controls shall be located to reduce the likelihood of injury from burners or elements while in use.

8.1.9 Glow Plugs and Pilot Lights.

8.1.9.1 Appliances with automatic igniter glow plugs or continuously lighted pilot lights for burner ignition shall be prohibited unless permitted by 8.1.9.2 or 8.1.9.3.

8.1.9.2 Automatic igniter glow plugs in appliances using sealed combustion chambers shall be permitted.

8.1.9.3 An oven control flame that operates only when the stove is in use shall be permitted.

8.1.10 Appliances shall be marked or identified permanently with the following information in a location visible after installation:

(1) Manufacturer's name or trademark
(2) Model number
(3) Serial number (if applicable)
(4) Fuel/energy used
(5) Maximum power consumption in kW when operating at capacity

8.2 Cooking Appliance Installation.

8.2.1 Exposed materials and finishes within 24 in. (61 cm) of heat-generating surfaces of appliances shall have a flame spread index of not more than 75 as determined in accordance with NFPA 255, *Standard Method of Test of Surface Burning Characteristics of Building Materials.*

8.2.2 Fabrics located above and within 39 in. (1 m) of a galley stove top, used for decorative or other purposes, shall be flame resistant in accordance with NFPA 701, *Standard Methods of Fire Tests for Flame Propagation of Textiles and Films.*

8.2.3 With the appliance installed, the temperature of vertical combustible surfaces below and surrounding heat-generating surfaces shall not rise more than 150°F (65°C) above the compartment's ambient temperature when using the temperature test of UL 858, *Standard for Safety Household Electric Ranges*, Section 53.

Copyright National Fire Protection Association
Provided by IHS under license with NFPA
No reproduction or networking permitted without license from IHS
Not for Resale

8.3 Coal, Charcoal, and Wood-Burning Appliances.

8.3.1 Appliances that burn solid fuel shall not be installed in gasoline-powered boats.

8.3.2 Installed stoves shall be mounted by one of the following methods:

(1) On a noncombustible base (preferably hollow tile)
(2) On legs providing a clearance of at least 5 in. (13 cm) between the stove bottom and the deck, and the deck insulated with a noncombustible material or sheathing

8.3.3 Stove Clearance.

8.3.3.1 The sides and backs of uninsulated stoves shall have a minimum clearance of 9 in. (23 cm) from the exposed materials and finishes, which shall meet the requirements of 8.2.1, or shall be separated by fire-resistant thermal insulation.

8.3.3.2 The sides and backs of insulated stoves shall have a minimum clearance from the exposed materials and finishes as specified by the manufacturer.

8.3.4 Smoke Pipe and Stack Clearance.

8.3.4.1 Single-wall smoke pipes and stacks on decks not equipped with water irons shall have a minimum clearance of 9 in. (23 cm) from combustible materials, including painted surfaces, or shall be separated by fire-resistant thermal insulation.

8.3.4.2 Listed and labeled double- or triple-wall smoke pipes and stacks on decks not equipped with water irons shall be installed with a minimum clearance from combustible materials, including painted surfaces, specified by the manufacturer.

8.3.5 Permanently installed solid-fuel burning appliances, other than solidified-alcohol galley stoves and exterior mounted grills, shall be equipped with a double- or triple-wall smoke pipe or stack that shall terminate above deck, and with smoke heads designed to minimize water entry, spark emission, and backdraft.

8.3.6 Where double- or triple-wall smoke pipe or stacks are installed, they shall meet the requirements of UL 103, *Standard for Safety Factory-Built Chimneys for Residential Type and Building Heating Appliances*, and installed in accordance with the specifications of the manufacturer.

8.3.7 Charcoal stored on the boat shall be kept dry and stored in a closed, dry metal container.

8.4 Liquid Fuel Appliances Excluding Liquefied Petroleum Gas (LPG) Appliances.

8.4.1 Both pressure-fed and gravity-fed burners shall be permitted.

8.4.2 Fuel Tanks.

8.4.2.1 Fuel supply tanks shall be constructed of corrosion-resistant metal or of metal having a corrosion-resistant finish or coating.

8.4.2.2 Pressurized Tanks.

8.4.2.2.1 Appliances with pressurized liquid fuel tanks that are integral with an appliance shall comply with the following criteria:

(1) Tanks shall withstand an internal pressure of four times the relief valve setting or 100 psi (700 kPa gauge), whichever is greater.
(2) Tank shall be shielded or insulated so that, under continuous operation at maximum heat, the pressure in the tank shall not exceed 50 percent of the relief valve setting.
(3) The complete system shall be tested up to the pressure of the relief valve setting.

8.4.2.2.2 Pressure tanks not integral with an appliance shall comply with the following criteria:

(1) Tanks shall be able to withstand a test pressure of at least 100 psi (700 kPa gauge) or twice the appliance relief valve setting, whichever is greater.
(2) Tanks shall be secured rigidly in an accessible location that permits convenient filling and pump operation.

8.4.2.2.3 Pressurized fuel tanks shall be equipped with relief valves.

8.4.2.3 Gravity Tanks.

8.4.2.3.1 Gravity tanks installed in the compartment with the appliance shall be located or shielded so that, when installed and under continuous operation at maximum heat output, the fuel temperature shall not rise more than 25°F (14°C) above the compartment temperature.

8.4.2.3.2 Gravity tanks shall have a capacity no more than 2.1 gal (8 L), unless the tank meets the requirements of Section 7.2 and is capable of withstanding a pressure of 3 psi (21 kPa gauge).

8.4.2.3.3 Non-integral gravity tanks shall have provisions for filling and venting at a distance of at least 39 in. (1 m) from open flame unless separated by a vaportight partition or bulkhead.

8.4.2.3.4 Where appliances burning liquid fuels have remote gravity tanks, provisions shall be made to relieve any excess pressure in the fuel line between the tank shutoff valve and the burner valve.

8.4.2.4 A readily accessible shutoff valve, not integral with the appliance, shall be installed near gravity tanks and at or on all non-integral pressure tanks.

8.4.2.5 Where a valve is required by 8.4.2.4, the valve shall close against fuel flow and shall clearly indicate the closed and open positions.

8.4.2.6 Liquid fuel supply lines from non-integral tanks shall be installed as a continuous run from the shutoff valve at the tank to the appliance or to the flexible section located immediately before a gimbaled stove.

8.4.2.7 Flexible liquid fuel supply hose sections shall be compatible with the fuel used.

8.4.2.8* The fill openings for non-integral fuel tanks shall be identified to indicate the type of fuel to be used with the system, and the word "fuel" shall not be used alone.

8.4.2.9 Liquid-fuel priming pans or troughs shall be secured to the burner or generator so that their mutual function is maintained.

8.4.2.10 A liquidtight, nonflammable drip pan at least ¾ in. (19 mm) deep shall be provided below all burners and shall be readily accessible for cleaning.

8.4.2.11 Appliances with integral tanks supplying fuel by gravity or pressure shall display a permanently affixed, legible warning label that contains at a minimum the following informational elements:

CAUTION: Fire and explosion hazard; severe burns.
Before filling, turn off burners.

Copyright National Fire Protection Association
Provided by IHS under license with NFPA
No reproduction or networking permitted without license from IHS
Not for Resale

8.4.2.12 Unpressurized stoves with fuel held in absorbent matter and designed with a fuel container removed for filling shall display a permanently affixed, legible label that contains at a minimum the following informational elements:

CAUTION: Fire and explosion hazard; severe burns.
Before filling, turn off all stove burners.
Remove fuel container from stove.
Fill fuel container away from stove.
Follow filling instructions provided.

8.4.3 If solidified alcohol is used as stove fuel, the container shall be secured on a fixed base to prevent sliding or overturning due to a sudden roll of the vessel.

8.4.4 Stacks and stoves shall comply with the applicable requirements of Section 8.3.

8.4.5 Sealed Combustion Chamber Heaters.

8.4.5.1 Sealed combustion chamber heaters that burn fuel oil shall be permitted to be used if they are designed to provide complete separation of the combustion system from the atmosphere in the boat.

8.4.5.2 A combustion air inlet and flue gas outlet shall be provided as integral parts of the appliance.

8.4.6* Means shall be provided on stove-top cooking surfaces to prevent both deep and shallow cooking utensils from sliding across or off the stove.

8.4.7 Oven doors shall be provided with a means to prevent their unintentional opening due to the force of sliding food and utensils.

8.4.8 A permanent, legible label shall be affixed in a conspicuous location on or adjacent to fuel burning stoves or ranges and shall contain at a minimum the following informational elements:

CAUTION: Open-flame cooking appliances consume oxygen. Lack of oxygen can cause asphyxiation or death. Maintain open ventilation when appliance is in use.
Do not use appliances for comfort heating.

8.4.9 Stove operating controls shall be located to be easily accessible and to minimize possible injury from burners or elements while in use.

8.4.10 The operation of controls shall not require reaching over or across burners or heated elements.

8.5* Liquefied Petroleum Gas (LPG) and Compressed Natural Gas (CNG) Systems for Permanently Installed Appliances.

8.5.1 The installation for use and storage of stoves with attached (integral) LPG containers of more than 8 oz (230 g) capacity weight of gas shall be prohibited in accommodation spaces in the boat interior.

8.5.2 LPG and CNG appliances, other than the appliances addressed in 8.5.3, shall be permanently installed.

8.5.3 Appliances employing integral butane cylinders containing no more than 8 oz (230 g) of fuel, and that comply with 8.5.14.9, shall not be required to be permanently installed.

8.5.4 Components of LPG systems subject to cylinder pressure shall have a rated working pressure of no less than 250 psi (1725 kPa gauge).

8.5.5 Components of CNG systems subject to cylinder pressure shall have a working pressure of no less than 133 percent of the maximum fill pressure of the cylinder.

8.5.6* Ignition Protection of Electrical Devices.

8.5.6.1 Electrical devices on boats equipped with LPG or CNG systems, which can function or cycle on and off automatically without the presence of a person and that are located below the main deck, shall be provided with ignition protection in accordance with UL 1500, *Standard for Safety Ignition-Protection Test for Marine Products*, if located in compartments other than those in 8.5.6.2 and 8.5.6.3, that contain LPG or CNG appliances, cylinders, fittings, valves, or regulators.

8.5.6.2 The requirements of 8.5.6.1 shall not apply to electrical devices in accommodation spaces.

8.5.6.3 The requirements of 8.5.6.1 shall not apply to electrical devices in open compartments having at least 15 $in.^2$ (97 cm^2) of open area per cubic foot of net compartment volume exposed to the open atmosphere outside the craft.

8.5.7 Systems shall use cylinders of the vapor withdrawal type.

8.5.8 Cylinders designed or installed to admit LPG into any other part of the system shall be prohibited.

8.5.9 Labels.

8.5.9.1 With each LPG or CNG system installed on a boat, at least two labels in accordance with 8.1.1 and 8.1.7 shall be installed and include the following:

(1) The signal word "WARNING"
(2) The introductory statement "To Avoid Fire and Explosion"

8.5.9.2 Labels at appliances shall include the statement, "This system is designed for use with (insert LPG or CNG) only. Do not connect (insert LPG or CNG) to this system."

8.5.9.3 Labels at containers shall include the following instructions where no leak detection device is installed:

(1) Close container valves when the boat is unattended and in case of a leak or fire.
(2) Close all appliance valves before opening container valves.
(3) Always apply the source of ignition to the burner before opening the burner valve.
(4) Mark container locker "For storage of (insert LPG or CNG) containers only."
(5) Keep valves closed and plugged on empty or unconnected containers.
(6) Test the system for leakage whenever the system is used, when the system is serviced, or when the container is changed as follows:
   (a) With the appliance valves closed and all other valves open, note the pressure on the gauge.
   (b) Close the container valve.
   (c) Ensure that the pressure remains constant for at least 5 minutes.
   (d) If the pressure drops, locate the leakage by application of a soapy water solution at all connections.
   (e) Repeat the test for each container in multicontainer systems.
   (f) Never use flame or soap containing ammonia to check for leaks.

8.5.9.4 Labels at containers shall include the instructions of 8.5.9.3 modifying 8.5.9.3(6) as appropriate if a leak detection device is installed.

8.5.9.5 On boats that have gasoline engines, the labels shall also contain at a minimum the following informational elements:

Copyright National Fire Protection Association
Provided by IHS under license with NFPA
No reproduction or networking permitted without license from IHS
Not for Resale

CAUTION: Avoid fire or explosion. Open-flame appliances can ignite gasoline vapor, causing fire or explosion. Turn off all open-flame appliances while fueling.

8.5.9.6 The required warning labels shall be installed in plainly visible locations on the outside of each container enclosure and adjacent to each consuming appliance.

8.5.10 Containers.

8.5.10.1 Containers shall be constructed, tested, marked, maintained, requalified for continued service, and refilled in accordance with one of the following:

(1) U.S. Department of Transportation (DOT) regulations for containers in LPG or CNG service
(2) Equivalent specifications or regulations to those in 8.5.10.1(1) and acceptable to the authority having jurisdiction

8.5.10.2 Containers shall be withdrawn from service under the following conditions:

(1) When they leak
(2) When corrosion, denting, bulging, or other evidence of rough usage exists to the extent that the container has been weakened
(3) When exposed to fire

8.5.11 Container Valves and Safety Relief Devices.

8.5.11.1 Each container other than nonrefillable containers shall have a manually operated shutoff valve installed directly into the container outlet opening that can be operated without the use of tools.

8.5.11.2 Where the container valve is not readily accessible from within the vicinity of the appliance, a readily accessible manual or electrically operated (solenoid) shutoff valve in addition to the valve required by 8.5.11.1 shall be installed and comply with the following:

(1) The valve shall be operable from within the vicinity of the appliance(s).
(2) The valve shall be installed in the low- or high-pressure fuel line at the fuel supply.

8.5.11.3 The location of the shutoff valve or control shall not require reaching across flame- or heat-generating surfaces for operation.

8.5.11.4 All containers shall be provided with safety relief devices as required by DOT regulations or equivalent regulations.

8.5.11.5 LPG container valves and safety relief devices shall have direct connection with the vapor space of the cylinder.

8.5.11.6 In addition to the valve required by 8.5.11.1, a multiple cylinder system shall be provided with a manual positive shutoff valve or automatic check valve at the cylinder manifold such that each cylinder shall be isolated from the pressure feedback from other cylinders.

8.5.11.7 All relief valves shall discharge to the open atmosphere at a point at least 2 ft (0.6 m) from any opening to any of the following:

(1) Cabin
(2) Hull interior
(3) Engine exhaust terminus

8.5.11.8 Valve outlets on containers shall be equipped with a plug or cap for thread protection and to keep out foreign material.

8.5.11.9 Whenever the container is not connected for use, the plug or cap required by 8.5.11.8 shall be in place and the container valve shall be kept tightly closed.

8.5.12 Reducing Regulators.

8.5.12.1 Each system shall be provided with a pressure-regulating device to deliver gas to the distribution piping that is specifically designed for the type of gas being used.

8.5.12.1.1 The regulating device required by 8.5.12.1 shall be adjusted to deliver gas at a pressure no more than 14 in. (36 cm) water column, approximately 0.735 psi (5.0 kPa gauge), for LPG systems.

8.5.12.1.2 The regulating device required by 8.5.12.1 shall be adjusted to deliver gas at a pressure no more than 6 in. (15 cm) water column, approximately 0.22 psi (1.5 kPa gauge), for CNG systems.

8.5.12.2 A low-pressure relief valve shall be integral with each regulator and shall discharge at between 1.7 and 3 times the delivery pressure of the regulator.

8.5.12.3 The relief valve vent outlet shall be located and designed to prevent water from entering the discharge system.

8.5.12.4* Each reducing regulator shall be fitted with a pressure gauge on the high-pressure side, and a leak detector shall be permitted to be used in addition to the gauge.

8.5.12.5 Each CNG system shall be supplied with a high-flow check valve located on the container pressure side of the regulating device.

8.5.12.6 The high-flow check valve required by 8.5.12.5 shall actuate and control gas flow through the vent or vent systems to the atmosphere in the event of regulator malfunction and shall maintain this gas flow within designed pressure limits of the vent system.

8.5.12.7 Relief high-flow restrictor vent outlets shall conform to the requirements of 8.5.11.7.

8.5.12.8 CNG pressure regulators shall be connected directly to the container shutoff valve, using one CGA series 350 connection.

8.5.13 Piping, Hose, and Fittings — LPG and CNG Distribution Systems.

8.5.13.1 Piping.

8.5.13.1.1 Low-pressure distribution piping between the regulator and appliances shall be galvanically compatible for a marine environment.

8.5.13.1.2 Piping shall be copper tubing of standard Type K, Type L, or equivalent.

8.5.13.1.3 Piping shall have a minimum wall thickness of at least 0.032 in. (0.8 mm) nominal.

8.5.13.1.4 Copper tubing in CNG systems shall be internally tinned.

8.5.13.2 Flexible Hose.

8.5.13.2.1 Hose Specifications.

8.5.13.2.1.1 LPG flexible distribution hose shall meet the requirements of UL 21, *Standard for Safety LP-Gas Hose.*

8.5.13.2.1.2 CNG flexible hose shall meet the requirements of NFPA 52, *Compressed Natural Gas (CNG) Vehicular Fuel Systems Code.*

Copyright National Fire Protection Association
Provided by IHS under license with NFPA
No reproduction or networking permitted without license from IHS
Not for Resale

8.5.13.2.2 Flexible hose shall be labeled for the fuel being used.

8.5.13.3 Connecting fittings shall be accessible.

8.5.13.4 Metallic connections, if soldered, shall be soldered or brazed with a material having a melting point exceeding 840°F (450°C).

8.5.13.5 Distribution lines shall be protected from physical damage and shall be accessible for inspection.

8.5.13.5.1 Lines shall be secured against vibration.

8.5.13.5.2 Lines shall be protected from abrasion wherever they pass through decks or bulkheads.

8.5.13.5.3 Each appliance shall be served by a separate low-pressure regulated supply line, which shall originate inside the locker or protective enclosure.

8.5.13.5.4 Flexible supply hose shall have permanently attached end fittings, such as a swaged sleeve or a sleeve and threaded insert.

8.5.13.6 Metal tube or piping shall be connected by means of flare fittings or other fittings designed for resistance to loosening due to vibration or movement, and shall not be connected using metal-to-metal compression sleeve-type fittings.

8.5.13.7 Flexible hose sections connecting appliances to their fuel supply shall be nonmetallic.

8.5.13.8 Flexible metallic connectors shall not be used to connect appliances to their fuel supply.

8.5.13.9 A flexible hose section shall be installed to allow the free swing of gimbaled stoves without stress to end fittings at expected extremes of travel.

8.5.13.10 Fuel supply lines, except for flexible hose installed to connect tube or piping to a device, shall be continuous lengths of tubing, piping, or hose to the appliance from one of the following:

(1) Regulating device
(2) Solenoid valve
(3) Leak detector (if installed)
(4) Manifold

8.5.13.11 Metallic fuel supply lines shall not be used for electrical grounding or bonding.

8.5.14 Appliances.

8.5.14.1 Appliances with automatic igniters for burner ignition, other than those with sealed combustion chambers, are prohibited.

8.5.14.2 All gas-fueled appliances, other than stoves with integral gas cylinders not exceeding 8 oz (230 g) capacity, shall incorporate a flame failure device on each burner or oven control flame to prevent gas flow if flame is not present.

8.5.14.3 Cabin space heaters, water heaters, gas-fueled refrigerators, and air conditioners shall be of the sealed combustion chamber type, designed to provide complete separation of the combustion system from the atmosphere in the boat.

8.5.14.4 A combustion air inlet and flue gas outlet shall be provided as integral parts of the appliances identified in 8.5.14.3.

8.5.14.5 Burner controls shall be equipped or designed to provide a push-turn or other two-phase operation when moved from the OFF position to the ON position.

8.5.14.6 Cooking appliances shall meet the combustion requirements of ANSI Z21.57, *Recreational Vehicle Cooking Gas Appliances*.

8.5.14.7 A permanent, legible label shall be affixed in a conspicuous location on or adjacent to appliances not having sealed combustion chambers that shall contain at a minimum the following informational elements:

**CAUTION: Open-flame appliances consume oxygen.
Lack of oxygen can cause asphyxiation or death.
Maintain open ventilation when appliance is in use.**

8.5.14.8 Means shall be provided on stove top cooking surfaces to prevent both deep and shallow cooking utensils from sliding across or off the stove at boat pitch or roll up to 30 degrees horizontal in any direction.

8.5.14.9 Cooking Equipment with Integral Fuel Cylinders.

8.5.14.9.1 Printed instructions for proper installation, operation, fuel storage, refueling, and maintenance shall be provided with each stove.

8.5.14.9.2 Fuel cylinders with a capacity of 8 oz (230 g) or less shall be DOT approved 2P/2Q cylinders with rim vent release.

8.5.14.9.3 Where used in the boat interior, stoves shall be secured in a designated location with a positive means of mechanical retention and the installation shall meet the requirements of Section 8.2.

8.5.14.9.4 A means shall be provided for storing all unattached fuel cylinders in a protected, self-draining location on the exterior of the boat so that vapors can flow overboard only.

8.5.14.10 The appliance shall have a label that indicates the required location of the device relative to all combustible surfaces and that identifies the type of fuel to be used with the appliance.

8.5.15 Location and Installation.

8.5.15.1 LPG and CNG containers, regulating devices, and safety equipment shall meet the following criteria:

(1) They shall be rigidly secured.
(2) They shall be readily accessible for operation of valves and testing for leakage.
(3) They shall be protected by a dedicated locker unless permitted otherwise by 8.5.15.2.1 or 8.5.15.2.2.

8.5.15.2 Dedicated Locker.

8.5.15.2.1 Containers shall not be required to be installed in a dedicated locker where located on open decks such that escaping vapor cannot accumulate in a cockpit or enclosed spaces, provided regulators, tank valves, and fittings are protected against mechanical damage by a vented housing, shield, or guard.

8.5.15.2.2 A CNG container shall not be required to be installed in a dedicated locker in CNG systems with a single container connected to the system having a capacity to hold 100 ft^3 or less of gas, when the gas is at 14.5 psi and 70°F.

8.5.15.2.3 A protective dedicated locker shall meet the following criteria:

(1) It shall be located above the waterline.
(2) It shall be vaportight to the hull interior.
(3) It shall be provided with a means to latch its cover.
(4) It shall be vented to the atmosphere.

Copyright National Fire Protection Association
Provided by IHS under license with NFPA
No reproduction or networking permitted without license from IHS
Not for Resale

(5) It shall be located so that, with its cover open or closed, escaping vapor cannot reach the bilges, machinery spaces, accommodations, or other enclosed spaces.

8.5.15.2.4 An LPG container locker shall be vented from the bottom by means of a vent pipe that meets the following criteria:

(1) The vent pipe shall be of at least ½ in. (13 mm) internal diameter.
(2) The vent pipe shall lead outboard.
(3) The vent pipe shall be without pockets that can trap water.
(4) The vent pipe shall pass through the hull above the waterline and at a point lower than the locker bottom.
(5) The vent pipe opening shall be at least 2 ft (0.6 m) distant from, and not directly above, any hull opening, including the engine exhaust.

8.5.15.2.5 Compartments and lockers in which CNG cylinders are stored shall have a ventilation opening located above the level of the cylinder of at least ½ in. (13 mm) internal diameter.

8.5.15.3 Installation of gas equipment in lockers or housing shall be such that, when the means of access to the lockers or housing is open, the container valves can be conveniently and quickly operated and the system pressure gauge dials are fully visible.

8.5.15.4 Lockers or housings for gas equipment shall not be used for storage of any other equipment, nor shall quick access to the gas system be obstructed in any way.

8.5.15.5 Provisions for storage of unconnected reserve containers, filled or empty, shall be the same as required for containers in use.

8.5.15.6* Leakage Tests.

8.5.15.6.1 After installation, distribution tubing shall be tested prior to its connection to the regulator and appliance using an air pressure of not less than 5 psi (34.5 kPa gauge) above ambient.

8.5.15.6.2 The container valve shall be tested for leakage at its outlet and at its connection to the container by application of a soapy water solution prior to connection of the system.

8.5.15.6.3 After the tests in 8.5.15.6.1 and 8.5.15.6.2, and when appliances and high-pressure equipment have been connected, the entire system shall be subjected to the following test:

(1) With appliance valves closed, solenoid valve or master shutoff valve at the appliance open, and one container valve open, note the pressure on the gauge.
(2) Close the container valve.
(3) Ensure pressure remains constant for at least 5 minutes.
(4) If the pressure drops, locate the leakage by application of soapy water solution at all connections.

8.5.15.6.4 Flame shall not be used to check for leaks.

8.5.15.7 CNG cylinders shall not be installed in compartments containing an internal combustion engine.

8.5.15.8 CNG cylinder storage compartments shall not have openings that communicate with the engine space above the level of the pressure regulator.

8.6 Service Water Heating Units and Cabin Heaters.

8.6.1 Vent stacks shall meet the following criteria:

(1) They shall lead to the atmosphere.
(2) They shall be equipped with an effective device for preventing flame extinguishment or flareback from backdraft and entrance of rain or spray.

8.6.2 Dampers shall not be installed in vent stacks.

8.7 Lamps.

8.7.1 Gasoline shall not be used for fuel.

8.7.2 Oil lamps shall have metal bodies and shall be hung in gimbals.

8.7.3 Oil lamps shall not be located directly over galley stoves or heating units.

8.7.4 Metal shields shall be secured above chimneys.

8.8 Electric Stoves.

8.8.1 Electric stoves shall meet the requirements of UL 858, *Standard for Safety Household Electric Ranges.*

8.8.2 Electric stoves equipped with a lid or cover shall incorporate an automatic power disconnect switch that turns off all surface burners when the lid or cover is lowered over the heating elements.

8.8.3 Electric stoves shall have a light indicating when one or more heating elements are energized.

8.8.4 Electric stoves shall be installed in accordance with the manufacturer's instructions.

Chapter 9 Electrical Systems Under 50 Volts

9.1 Scope.

9.1.1 The standards and practices of this chapter shall apply to the design and installation of direct current (dc) electrical systems on boats that operate at potentials of 50 volts or less except for the systems addressed in 9.1.2.

9.1.2 The standards and practices of this chapter shall not apply to any wire permanently attached to an outboard engine and extending not more than 72 in. (183 cm) from the outboard engine.

9.2 General Requirements.

9.2.1 Conductor Length Measurement. All lengths for conductors shall be measured along the conductors.

9.2.2* Two-Wire System.

9.2.2.1 Branch circuits shall be of the two-wire type and shall use insulated conductors to and from each item of equipment unless permitted otherwise by 9.2.2.4 or 9.2.2.5.

9.2.2.2 The feed and return wires for the circuits of 9.2.2.1 shall be run together from the power source to the equipment.

9.2.2.3 If a common return is used for the circuits of 9.2.2.1, it shall be of equal wire gauge to the panelboard feeder.

9.2.2.4 The electrical system on a propulsion or auxiliary engine shall be permitted to be of the one-wire type, with the negative side of the system connected directly to the engine block.

9.2.2.5 The accessory negative bus of an outboard engine shall be permitted to be connected to the battery.

--`,,,,`,-`-`,,`,,`,`,,`---

Copyright National Fire Protection Association
Provided by IHS under license with NFPA
No reproduction or networking permitted without license from IHS
Not for Resale

9.2.3 Return Circuit. A metal hull, bonding conductor, or grounding conductor shall not be used as a return circuit unless permitted otherwise by Section 9.11.

9.2.4 Grounded Systems. If one side of a two-wire dc system is connected to ground, it shall be the negative side, and the system shall be polarized.

9.2.5 Multiple Engine Installation.

9.2.5.1 If a boat has more than one inboard propulsion or auxiliary engine, grounded cranking motor circuits shall be connected to each other by a common conductor that can carry the starting current of each of the grounded cranking motor circuits.

9.2.5.2 Outboard engines shall be connected at the battery negatives.

9.2.6 Crossover (Parallel) Cranking Motor Circuits.

9.2.6.1 In multiple inboard engine installations (including auxiliary generators) with crossover (parallel) cranking motor systems, the engines shall be connected together with a cable except for where the installation uses ungrounded dc electrical systems.

9.2.6.2 The cable required by 9.2.6.1 shall be large enough to carry the cranking motor current of the largest cranking motor.

9.2.6.3 The cable required by 9.2.6.1 and its terminations shall be in addition to, and independent of, any other electrical connections to the engines, including those required in 9.2.5.

9.3 Batteries.

9.3.1 Batteries shall be accessible for inspection and maintenance.

9.3.2 Batteries shall not be tapped for voltages other than the total voltage of all the cells comprising the battery.

9.3.3* A vent system or other means shall be provided to allow hydrogen gas released by the battery to discharge from the boat.

9.3.4 Battery boxes with a cover that forms a pocket over the battery shall be vented.

9.3.5* Batteries shall be secured to provide immobilization to the extent practicable.

9.3.6 Battery Trays.

9.3.6.1 Batteries shall be located in a liquidtight tray or battery box of adequate capacity to retain normal spillage or boilover of electrolytes.

9.3.6.2 Battery trays shall be constructed of, or lined with, materials resistant to deterioration by the electrolytes.

9.3.7 A nonconductive, perforated cover or other means shall be provided to prevent accidental shorting of the ungrounded battery terminals and cell connectors.

9.3.8 Batteries with metal cell containers shall be assembled in nonconductive trays having insulated cell supports, and provision shall be made to prevent other conductive materials that could cause a short circuit from contacting cell containers.

9.3.9* Each metallic fuel line and fuel system component located within 12 in. (30 cm) of the battery and above the horizontal plane of the battery top surface, as installed, shall be shielded with dielectric material.

9.3.10 The positive terminal of each battery shall be marked on the terminal, or on the battery case near the terminal, by one of the following:

(1) The letters "POS"
(2) The letter "P"
(3) The symbol "+"

9.3.11 Battery terminal connections shall not depend on spring tension.

9.4 Power Distribution System Negative Connections.

9.4.1 The negative terminal of the battery and the negative side of the electrical power distribution system shall be connected to the engine negative terminal or its bus, unless permitted otherwise by 9.4.2.

9.4.2 The negative side of the electrical power distribution system shall be permitted to use the battery negative terminal on outboard boats.

9.4.3 Accessory Negative Bus. An accessory negative bus shall be permitted, provided the following conditions are met:

(1) All accessories connected to the bus shall be branch circuits from the same panelboard.
(2) Negative buses, negative bus return conductors, and their terminals and connections shall have an ampacity equal to the panelboard feeder.
(3) Negative return conductors from the panelboard feeding the branch circuits that use the accessory negative bus shall be equal in size to the positive feeder to the panelboard.

9.5 Continuously Energized Parts.

9.5.1 Continuously energized parts other than those addressed in 9.5.2, such as the positive battery terminal and both ends of all wires connected thereto, shall be physically protected by boots, sleeving, or other insulation to prevent an accidental short.

9.5.2 The protection specified in 9.5.1 shall not apply to conductors that have overcurrent protection at the source of power in accordance with Section 9.9.

9.6 Marking.

9.6.1 Marking of Controls.

9.6.1.1 Switches and electrical controls shall be marked to indicate their use unless otherwise permitted by 9.6.1.2.

9.6.1.2 A switch or electrical control shall not be required to be marked where it meets the following criteria:

(1) Its purpose is obvious.
(2) Its erroneous operation cannot cause a hazardous condition.

9.6.2* Marking of Equipment. Electrical equipment, unless it is part of an identified assembly, shall be marked or identified by the manufacturer to indicate the following:

(1) Manufacturer
(2) Identifying number
(3) Electrical rating (dc) in volts
(4) Terminal polarity or identification, if necessary to operation
(5) Ignition protection, if applicable

9.6.3 Rated Current.

9.6.3.1 The rated current of electrical equipment, unless it is part of an identified assembly, shall be made available.

Copyright National Fire Protection Association
Provided by IHS under license with NFPA
No reproduction or networking permitted without license from IHS
Not for Resale

9.6.3.2 Marking the device with the rated current shall be permitted to meet the requirements of 9.6.3.1.

9.7 Ambient Temperature.

9.7.1 The ambient temperature of machinery spaces shall be considered to be 122°F (50°C).

9.7.2 The ambient temperature of spaces other than machinery spaces shall be considered to be 86°F (30°C).

9.8 Ignition Sources.

9.8.1 Potential sources of ignition, except those isolated from a gasoline fuel source in accordance with 9.8.2, shall be ignition protected if located in spaces containing one of the following:

(1) Gasoline-powered machine
(2) Gasoline fuel tank
(3) Joint, fitting, or other connection between components of a gasoline fuel system

9.8.2* An electrical component shall be considered to be isolated from a gasoline fuel source provided that one of the following conditions is met:

(1) The distance between the electrical component and the gasoline fuel source is at least 2 ft (0.6 m), and the space is open to the atmosphere
(2) Electrical component is located below the gasoline fuel source, and a means is provided to prevent gasoline fuel and vapors that can leak from the gasoline fuel sources from exposure to the electrical component
(3) Electrical component is located above the gasoline fuel source, and a deck or other enclosure is located between the ignition source and the gasoline fuel source
(4) A bulkhead is located between the gasoline fuel source and ignition source that meets the following criteria:
    (a) Separates the electrical component(s) from the gasoline fuel source and extends the length of both the vertical and horizontal distances of the open space between the gasoline fuel source and the ignition source
    (b) Resists a water level of 12 in. (30 cm) or of one-third the maximum height of the bulkhead, whichever is lower, without seepage of more than ¼ fl oz (7.4 ml) of fresh water per hour
    (c) Has no opening higher than 12 in. (30 cm) or one-third the maximum height of the bulkhead, whichever is lower, unless the opening meets the following criteria:
        i. Is used for the passage of items such as conductors, piping, ventilation ducts, and mechanical equipment, or for doors, hatches, and access panels
        ii. Has a maximum annular space around each item passing through it not more than ¼ in. (6.4 mm)

9.9 Overcurrent Protection.

9.9.1 General.

9.9.1.1 The distances specified in Section 9.9 shall be measured along the conductor.

9.9.1.2 The requirements of 9.9.2 through 9.9.10.2 shall not apply to pigtails less than 7 in. (18 cm) in length.

9.9.2* Overcurrent Protection Location. Conductors other than cranking motor conductors shall be provided with overcurrent protection at the source of power unless permitted by 9.9.2.1, 9.9.2.2, or 9.9.2.3.

9.9.2.1 Where not practical to locate overcurrent protection at the source of power, conductors other than cranking motor conductors shall be provided with overcurrent protection no more than 7 in. (18 cm) from the point at which the conductor is connected to the source of power measured along the conductor.

9.9.2.2 If the conductor is contained in a sheath or enclosure, such as a junction box, control box, or enclosed panel, throughout the required distance, and where not practical to locate overcurrent protection at the source of power, conductors other than cranking motor conductors shall be provided with overcurrent protection no more than 40 in. (102 cm) from the point at which the conductor is connected to the source of power.

9.9.2.3 If the conductor is connected directly to the battery terminal, and where not practical to locate overcurrent protection at the source of power, conductors other than cranking motor conductors shall be provided with overcurrent protection no more than 72 in. (183 cm) from the battery terminal.

9.9.3 Charging Sources.

9.9.3.1* Only battery charging sources designed to meet the requirements of the battery manufacturer shall be used for charging.

9.9.3.2 Overcurrent Protection of Conductors.

9.9.3.2.1 Each ungrounded dc conductor that runs from the battery charger or other charging source to a battery or other point of connection to the dc system shall be provided with overcurrent protection within a distance of 7 in. (18 cm) from the point of connection to the dc electrical system or battery, unless otherwise permitted by 9.9.3.2.2, 9.9.3.2.3, or 9.9.3.2.4.

9.9.3.2.2 Where a conductor specified in 9.9.3.2.1 is connected directly to the battery terminal and is contained throughout its entire distance in a sheath or enclosure such as a conduit, junction box, control box, or enclosed panel, the overcurrent protection shall be placed no more than 72 in. (183 cm) from the battery.

9.9.3.2.3 Where a conductor specified in 9.9.3.2.1 is connected to a source of power other than the battery terminal and is contained in a sheath or enclosure such as a conduit, junction box, control box, or enclosed panel, the overcurrent protection shall be placed no more than 40 in. (102 cm) from the point of connection.

9.9.3.2.4 Overcurrent protection is not required in conductors from self-limiting alternators with integral regulators if the following criteria are met:

(1) The conductor is no more than 40 in. (102 cm).
(2) The conductor is connected to a source of power other than the battery.
(3) The conductor is contained throughout its entire distance in a sheath or enclosure.

9.9.3.3 Overcurrent Protection within Charging Source.

9.9.3.3.1 Unless otherwise permitted by 9.9.3.3.2, each ungrounded dc output conductor shall be provided with overcurrent protection both within the charging source that is based on the maximum output and at the point of connection to the dc system or battery based on the conductor size.

9.9.3.3.2 Self-limiting devices that are not capable of producing current in excess of the current rating of the connecting

Copyright National Fire Protection Association
Provided by IHS under license with NFPA
No reproduction or networking permitted without license from IHS
Not for Resale

conductors shall not require overcurrent protection for the dc output conductors but do require overcurrent protection at the point of connection to the dc system or battery.

9.9.4 Motors and Motor-Operated Equipment.

9.9.4.1* Motors and motor-operated equipment, except for engine cranking motors, shall be protected internally at the equipment or by branch-circuit overcurrent devices suitable for motor current.

9.9.4.2* The protection required in 9.9.4.1 shall preclude a fire hazard if the circuit, as installed, is energized for 7 hours under any conditions of overload, including locked rotor.

9.9.5 Overcurrent Protection Device Rating. The rating of overcurrent protection devices used to protect both the conductor and a load other than a dc motor shall not exceed 150 percent of the current-carrying capacity of the conductor being protected.

9.9.6 Branch Circuits. Each ungrounded conductor of a branch circuit shall be provided with overcurrent protection at the point of connection to the panelboard, unless the main circuit breaker or fuse provides such protection.

9.9.7* Distribution Panels, Panelboards, and Switchboards (Panelboards).

9.9.7.1 A trip-free circuit breaker or a fuse shall be installed at the power source for panelboards.

9.9.7.2 The protection required by 9.9.7.1 shall be rated at no more than 150 percent of the current-carrying capacity of either the supply or return conductor it serves.

9.9.7.3 If the protection required by 9.9.7.1 also serves as the panelboard overcurrent protection, it shall be rated at no more than 100 percent of the panelboard load capacity.

9.9.7.4 The overcurrent protection device in a panelboard shall be rated at no more than 100 percent of the total load capacity of the panelboard and no more than 100 percent of the current-carrying capacity of the feeders to the panelboard.

9.9.8 Circuit Breakers. The following shall apply to circuit breakers:

(1) They shall have a dc voltage rating of not less than the nominal system voltage.
(2) They shall be of the trip-free type.
(3) They shall be capable of an interrupting capacity in accordance with Table 9.9.8.
(4)*They shall meet the marine requirements of one of the following:
   (a) UL 489, *Standard for Safety Molded-Case Circuit Breakers and Circuit-Breaker Enclosures*
   (b) UL 1077, *Standard for Safety Supplementary Protectors for Use in Electrical Equipment,* if used as a branch circuit breaker and it can interrupt the current specified for branch circuit breakers in Table 9.9.8 alone or in combination with the main circuit breaker
   (c) UL 1133, *Standard for Safety Boat Circuit Breakers*
(5)*If located in a space that requires ignition protection, they shall meet the requirements of UL 1500, *Standard for Safety Ignition-Protection Test for Marine Products*, at four times their rated current.

Table 9.9.8 Circuit Breaker Minimum Amperage Interrupting Capacity

Cold Cranking Current Rating at 0°F (–18°C) of Total Connected Battery Capacity	Ampere Interrupting Capacity (AIC) (Amperage available at circuit breaker terminals)	
	Main Circuit Breaker (Amperes)	Branch Circuit Breaker (Amperes)
12 volts and 24 volts		
650 or less	1500	750
651 – 1100	3000	1500
Over 1100	5000	2500
32 volts		
1250 or less	3000	1500
Over 1250	5000	2500

Notes:
1. The main circuit breaker is considered to be the first breaker(s) in a circuit connected in series with the battery. All subsequent breakers connected in series with a main circuit breaker are considered to be branch circuit breakers.
2. Under Battery Council International conversion factors, the following approximate correlations are used for 0°F (–18°C):

Cold Cranking Amperes	Ampere Hours (20-hour rating)
630	120
1076	205
1260	240

For the purpose of converting the 20-hour ampere/hour rating to approximate cold cranking amperes, use a value of 5.25 × the ampere/hour rating.

9.9.9 Fuses. The following shall apply to fuses:

(1) They shall have a dc voltage rating of not less than the nominal system voltage.
(2) They shall be capable of an interrupting capacity in accordance with Table 9.9.8.
(3)*If located in a space that requires ignition protection, they shall meet the requirements of SAE J1171, *External Ignition Protection for Marine Devices*, or UL 1500, *Standard for Safety Ignition-Protection Test for Marine Products*; and if an internal explosion test is required, the test shall be conducted at no less than 4 times the current rating of the fuse.

9.9.10 Integral Overcurrent Protection Devices.

9.9.10.1 Integral overcurrent protection devices without a manual reset shall be permitted to be used as an integral part of an electrical device, provided the remainder of the circuit is protected by a trip-free circuit protection device(s) or a fuse(s).

9.9.10.2 Integral overcurrent protection shall be sized to protect the accessory in which it is installed.

9.10 Switches.

9.10.1 Battery Switch Location. If used, a battery switch shall be mounted as close as practicable to the battery and shall be readily accessible.

Copyright National Fire Protection Association
Provided by IHS under license with NFPA
No reproduction or networking permitted without license from IHS
Not for Resale

9.10.2 Master Battery Switch.

9.10.2.1 All boats with a battery or battery bank with a cold cranking capacity of greater than 800 amperes shall have a master battery switch that meets the requirements of Section 9.8.

9.10.2.2 Electronic devices with protected memory and protective devices, such as bilge pumps and protected alarm systems, shall be permitted to be connected to the continuously energized side of the switch required in 9.10.2.1.

9.10.3 Battery Switch Ratings.

9.10.3.1 The intermittent rating of a battery switch shall be not less than the maximum cranking current of the largest engine cranking motor it serves.

9.10.3.2 The continuous rating of a battery switch shall be not less than the total of the ampacities of the main overcurrent protection devices connected to the battery switch.

9.10.4 Branch Circuit Switches. Single-pole switches used in branch circuits, except for the following, shall be installed in the positive conductor of the circuit:

(1) Engine-mounted pressure, vacuum, and temperature-operated switches
(2) Switches used for control of alarm systems

9.10.5* Voltage Rating. Switches shall have a voltage rating of no less than the system voltage.

9.10.6 Current Rating. Switches shall have a current rating of no less than the connected load.

9.11 Appliances and Equipment.

9.11.1 Current-Carrying Parts.

9.11.1.1 Appliances and fixed dc electrical equipment, other than devices identified in 9.11.1.2 and 9.11.1.3, shall be designed so that the current-carrying parts of the devices are insulated from all exposed electrically conductive parts.

9.11.1.2 Engine-mounted equipment shall be permitted to have their negative conductors connected to exposed electrically conductive parts.

9.11.1.3 Specific Devices.

9.11.1.3.1 The following devices shall be permitted to have their negative conductors connected to exposed electrically conductive parts:

(1) Communications and audio equipment
(2) Electronic navigation equipment
(3) Instruments and instrument clusters
(4) Cigarette lighters
(5) Liquid level gauge transmitters (for installation on conductive surfaces)
(6) Navigation lights operating at nominal 12 volts or less

9.11.1.3.2 If a device identified in 9.11.1.3.1 has negative conductors connected to exposed electrically conductive parts, the device shall meet the following criteria:

(1) The polarity of both the positive and negative connections shall be identified.
(2) It shall be mounted only on electrically nonconductive material.
(3) It shall not be bonded.

9.11.2 Grounded Liquid Level Gauge Transmitters (Senders).

9.11.2.1 Grounded liquid level gauge transmitters mounted on metallic tanks or tank plates shall have the transmitter negative return conductor connected directly to the engine negative terminal, its bus, or, for outboard boats, the battery negative terminal.

9.11.2.2 The transmitter negative return conductor shall serve as the static ground or the bonding conductor, or both.

9.11.2.3 If the transmitter negative return conductor is used as the tank system bonding conductor, it shall be minimum No. 8 AWG.

9.11.2.4 No device or component other than a grounded liquid level gauge transmitter, tank, tank fill components, or tank vent components shall be connected to the transmitter negative return conductor or statically grounded to the tank.

9.11.3 Pigtail connections on submersible devices such as submersible bilge pumps shall not be shorter in length than 16 in. (41 cm).

9.11.4 Battery chargers and their installation shall comply with the requirements of ABYC A-20, *Battery Charging Devices*.

9.11.5 Inverters.

9.11.5.1 Inverters and their installation shall comply with the requirements of ABYC A-25, *Power Inverters*.

9.11.5.2 Inverter chargers and their installation shall comply with the requirements of ABYC A-20, *Battery Charging Devices*, and ABYC A-25, *Power Inverters*.

9.12 System Wiring.

9.12.1 Conductors and flexible cords shall have a minimum rating of 50 volts.

9.12.2* The construction of insulated cables and conductors shall conform with the requirements of SAE J1127, *Standard for Battery Cable;* SAE J1128, *Standard for Low Tension Primary Cable;* or UL 1426, *Standard for Safety Electrical Cables for Boats*.

9.12.3 Conductors shall be permitted to be selected from the types provided in Table 9.12.3(a) and Table 9.12.3(b).

9.12.4 Flexible cords shall conform with NFPA 70, *National Electrical Code*, and shall be selected from the types specified in Table 9.12.4.

9.12.5 Conductors and flexible cords shall be stranded copper according to Table 9.12.5(a) and shall be sized in accordance with Table 9.12.5(b).

9.12.6 Conductors and flexible cords shall be sized for voltage drop as follows:

(1) 3 percent for panelboard main feeders
(2) 3 percent for navigation light circuits
(3) 3 percent for electronic equipment circuits
(4) 3 percent for bilge pump, blower, and refrigeration motor circuits
(5) 10 percent for all noncritical circuits not identified in 9.12.6(1) through 9.12.6(4)

Copyright National Fire Protection Association
Provided by IHS under license with NFPA
No reproduction or networking permitted without license from IHS
Not for Resale

Table 9.12.3(a) SAE Conductors

Type	Description	Available Insulation Temperature Rating °C	°F
GPT	Thermoplastic insulation, braidless	60	140
		90	194
		105	221
HDT	Thermoplastic insulation, braidless	60	140
		90	194
		105	221
SGT	Thermoplastic insulation, braidless	60	140
		90	194
		105	221
STS	Thermosetting synthetic rubber insulation, braidless	85	185
		90	194
HTS	Thermosetting synthetic rubber insulation, braidless	85	185
		90	194
SXL	Thermosetting cross-linked polyethylene insulation, braidless	125	257

Source: SAE J378, *Recommended Practice for Marine Engine Wiring.*
Note: The temperature ratings shown assume the routing of wires above bilge water in locations protected from dripping, exposure to weather, spray, and oil.

Table 9.12.3(b) Acceptable Insulation Types

Type	Description	Available Insulation Temperature Rating °C	°F
THW	Moisture- and heat-resistant, thermoplastic	75	167
TW	Moisture-resistant, thermoplastic	60	140
THWN	Moisture- and heat-resistant, thermoplastic	75	167
XHHW	Moisture- and heat-resistant, cross-linked synthetic polymer	90	194
MTW	Moisture-, heat-, and oil-resistant, thermoplastic	90	194
AWM	Moisture-, heat-, and oil-resistant, thermoplastic	105	221
Style Nos.:*	Thermosetting		
1230			
1231			
1275			
1276			
1329			
1335			
1336			
1337			
1339			
1340			
1345			
1388			
3403			
UL 1426	Boat cable	*(See UL 1426, Standard for Safety Electrical Cables for Boats.)*	

* Numbers listed are style numbers.

9.12.7 Conductor Sizing Formula.

9.12.7.1 Conductor sizes shall be permitted to be calculated by means of the following formula.

$$CM = \frac{K \times I \times L}{E}$$

where:
CM = circular mil area of conductor
K = 10.75 (constant representing the mil-foot resistance of copper)
I = load current in amperes
L = length of conductor from the positive power source connection to the electrical device and back to the negative power source connection, measured in feet
E = voltage drop at load in volts (e.g., 12 volt @ 3 percent = 0.36)

9.12.7.2 If the circular mil area calculated in 9.12.7.1 is less than the value specified in Table 9.12.5(a), the next larger size conductor shall be used.

9.13 Wiring Installation.

9.13.1* Current-carrying conductors shall be routed above the bilge water level and other areas where water can accumulate where the wiring and connectors are not watertight.

Table 9.12.4 Flexible Cords

Type	Description	Insulation Temperature Rating	Application
SO	Hard service cord — oil-resistant compound	60°C (140°F)	General use except for machinery space
		75°C (167°F) and higher	General use
ST	Hard service cord — thermoplastic	60°C (140°F)	General use except for machinery space
		75°C (167°F) and higher	General use
STO	Hard service cord — oil-resistant thermoplastic	60°C (140°F)	General use except for machinery space
		75°C (167°F) and higher	General use
SJO	Junior hard service cord — oil-resistant compound	60°C (140°F)	General use except for machinery space
		75°C (167°F) and higher	General use
SJT	Junior hard service cord — thermoplastic	60°C (140°F)	General use except for machinery space
		75°C (167°F) and higher	General use
SJTO	Junior hard service cord — thermoplastic	60°C (140°F)	General use except for machinery space
		75°C (167°F) and higher	General use

Copyright National Fire Protection Association
Provided by IHS under license with NFPA
No reproduction or networking permitted without license from IHS
Not for Resale

Table 9.12.5(a) Conductor Circular Mil (CM) Area and Stranding

Conductor Size (AWG)	Minimum Acceptable CM Area[a]	Minimum Number of Strands	
		Type 2[b]	Type 3[c]
18	1,537	16	—
16	2,336	19	26
14	3,702	19	41
12	5,833	19	65
10	9,343	19	105
8	14,810	19	168
6	25,910	37	266
4	37,360	49	420
2	62,450	127	665
1	77,790	127	836
1/0	98,980	127	1064
2/0	125,100	127	1323
3/0	158,600	259	1666
4/0	205,500	418	2107

Note: Metric wire sizes are to be used if of equivalent circular mil area. If the circular mil area of the metric conductor is less than that specified, the wire ampacity can be corrected based on the ratio of the circular mil area.

[a]Applies only to systems under 50 volts.

[b]Conductors with Type 2 stranding, used for general-purpose wiring, which is subject to some movement from vibration or minor flexing.

[c]Conductors with Type 3 stranding, used for any wiring where flexing is involved in normal use.

9.13.2* Conductors, other than wiring on engines and exhaust temperature sensor wiring, shall be routed in a manner that complies with the following criteria:

(1) There shall be a clearance of no less than 2 in. (5 cm) between conductors and water-cooled exhaust components.
(2) There shall be a clearance of no less than 9 in. (23 cm) between conductors and dry exhaust components where the conductor is not directly above the exhaust.
(3) There shall be a clearance of no less than 18 in. (46 cm) between conductors and dry exhaust components where conductors are located directly above the exhaust.

9.13.3 Battery Cables.

9.13.3.1 Battery cables shall not contact any metallic fuel system components.

9.13.3.2* Where contact occurs between battery cables and nonmetallic fuel system components, cables shall be secured to prevent relative motion and abrasion between the two system components.

9.13.4 Physical Damage.

9.13.4.1 Conductors subject to exposure to physical damage shall be protected by loom, conduit, tape, raceways, or other equivalent protection.

9.13.4.2 The protection required by 9.13.4.1 shall be self-draining.

9.13.4.3 Conductors passing through or around bulkheads or structural members shall be protected to minimize insulation damage such as chafing or compression.

9.13.4.4 Conductors shall be routed clear of sources of chafing such as steering cable and linkages, engine shafts and belts, and throttle connections.

9.13.5 Minimum Size.

9.13.5.1 Conductor sizes shall be no less than No. 16 gauge unless permitted otherwise by 9.13.5.2 or 9.13.5.3.

Table 9.12.5(b) Allowable Amperage of Conductors for Under 50 Volts

Conductor Size		Temperature Rating of Conductor Insulation												
		60°C (140°F)		75°C (167°F)		80°C (176°F)		90°C (194°F)		105°C (221°F)		125°C (257°F)		200°C (392°F)
English	Metric	Outside Engine Spaces	Inside Engine Spaces	Outside Engine Spaces	Inside Engine Spaces	Outside Engine Spaces	Inside Engine Spaces	Outside Engine Spaces	Inside Engine Spaces	Outside Engine Spaces	Inside Engine Spaces	Outside Engine Spaces	Inside Engine Spaces	Outside or Inside Engine Spaces
18	0.8	10	5.8	10	7.5	15	11.7	20	16.4	20	17.0	25	22.3	25
16	1	15	8.7	15	11.3	20	15.6	25	20.5	25	21.3	30	26.7	35
14	2	20	11.6	20	15.0	25	19.5	30	24.6	35	29.8	40	35.6	45
12	3	25	14.5	25	18.8	35	27.3	40	32.8	45	38.3	50	44.5	55
10	5	40	23.2	40	30.0	50	39.0	55	45.1	60	51.0	70	62.3	70
8	8	55	31.9	65	48.8	70	54.6	70	57.4	80	68.0	90	80.1	100
6	13	80	46.4	95	71.3	100	78.0	100	82.0	120	102.0	125	111.3	135
4	19	105	60.9	125	93.8	130	101.4	135	110.7	160	136.0	170	151.3	180
2	32	140	81.2	170	127.5	175	136.5	180	147.6	210	178.5	225	200.3	240
1	40	165	95.7	195	146.3	210	163.8	210	172.2	245	208.3	265	235.9	280
0	50	195	113.1	230	172.5	245	191.1	245	200.9	285	242.3	305	271.5	325
00	62	225	130.5	265	198.8	285	222.3	285	233.7	330	280.5	355	316.0	370
000	81	260	150.8	310	232.5	330	257.4	330	270.6	385	327.3	410	364.9	430
0000	130	300	174.0	360	270.0	385	330.3	385	315.7	445	378.3	475	422.8	510

Copyright National Fire Protection Association
Provided by IHS under license with NFPA
No reproduction or networking permitted without license from IHS
Not for Resale

9.13.5.2 No. 18 gauge conductors shall be permitted to be used if they are included with other conductors in a sheath and do not extend more than 30 in. (75 cm) outside the sheath.

9.13.5.3 Conductor sizes shall be permitted to be less than No. 16 gauge where the conductor is contained completely within equipment or enclosures.

9.13.6 Conductor Support.

9.13.6.1 Conductors shall be supported for their entire length unless permitted otherwise by 9.13.6.2 through 9.13.6.4.

9.13.6.2 Conductors shall be permitted to be supported at least every 18 in. (46 cm) by nonmetallic clamps of a size to hold the conductors firmly in place.

9.13.6.2.1 Nonmetallic straps or clamps shall not be used over engine(s), moving shafts, other machinery, or passageways if failure can result in a hazardous condition.

9.13.6.2.2 Conductor material shall be resistant to oil, gasoline, and water and shall not break or crack under flexing within a temperature range of –30°F to 250°F (–34°C to 121°C).

9.13.6.3 Metal Straps Without Insulating Material.

9.13.6.3.1 Conductors, other than battery cables within 36 in. (91 cm) of a battery terminal and cables attached to outboard motors, shall be permitted to be supported at least every 18 in. (46 cm) by metal straps or clamps with smooth, rounded edges.

9.13.6.3.2 Sections of the conductor or cable located directly under the strap or clamp shall be protected by means of loom, tape, or other suitable wrapping to prevent injury to the conductor.

9.13.6.4 Conductors shall be permitted to be supported at least every 18 in. (46 cm) by metal clamps lined with an insulating material resistant to the effects of oil, gasoline, and water.

9.13.7 Loom used to cover conductors shall be manufactured from material that is self-extinguishing, classified V-2 or better, in accordance with UL 94, *Tests for Flammability of Plastic Materials*.

9.14 Wiring Connections.

9.14.1 Metals.

9.14.1.1 Metals used for the terminal studs, nuts, and washers shall be corrosion resistant and galvanically compatible with the conductor and terminal lug.

9.14.1.2 Aluminum and unplated steel shall not be used for studs, nuts, and washers.

9.14.2 Wiring connections and terminals shall be designed specifically for use with stranded wire.

9.14.3 Each conductor splice joining conductor to conductor, conductor to connectors, and conductor to terminals shall be able to withstand a tensile force equal to at least the value shown in Table 9.14.3 for the smallest conductor size used in the splice for a 1-minute duration without breaking.

9.14.4 Terminal Connectors.

9.14.4.1 Terminal connectors shall be of the ring or captive spade type unless permitted otherwise by 9.14.4.2.

9.14.4.2 Terminal connectors shall be permitted to be of the friction type where the following conditions are met:

(1) Voltage drop from terminal to terminal does not exceed 50 millivolts for a 20-ampere current flow

Table 9.14.3 Tensile Test Values for Connections

Conductor Size (gauge)	Tensile Force		Conductor Size (gauge)	Tensile Force	
	lb	N		lb	N
18	10	44	4	70	311
16	15	66	3	80	355
14	30	133	2	90	400
12	35	155	1	100	444
10	40	177	0	125	556
8	45	200	00	150	667
6	50	222	000	175	778
5	60	266	0000	225	1000

(2) Connection does not separate if subjected to a 6 lb (26.7 N) tensile force along the axial direction of the connector for 1 minute

9.14.5 Connections shall be permitted to be made using a set-screw, pressure-type conductor connector, provided a means is used to prevent the set screw from bearing directly on the conductor strands.

9.14.6 Twist-on connectors (wire nuts) shall not be used.

9.14.7* Solder shall not be the sole means of mechanical connection in any circuit except in the following situations:

(1) Battery lugs with a solder contact length of not less than 1.5 times the diameter of the conductor
(2) Conductors contained completely within equipment or enclosures

9.14.8 Solderless crimp-on connectors shall be attached with the type of crimping tools designed for the connector used.

9.14.9 Each battery terminal post shall be used for no more than one conductor and any of the following:

(1) Connections made for paralleling batteries
(2) One conductor where installed in accordance with 9.9.2

9.14.10 When a battery terminal post incorporates a threaded terminal stud, the wire size connected to the terminal stud shall not be greater than No. 2 AWG.

9.14.11 No more than four conductors shall be secured to any terminal stud.

9.14.12 Terminal connectors of the ring and captive spade type shall be the same nominal size as the stud.

9.14.13 Conductors terminating at switchboards in junction boxes or at fixtures shall be arranged to provide a length of conductor to relieve tension, to allow for repairs, and to permit multiple conductors to be fanned at terminal studs.

9.14.14 The shanks of terminals, other than those used in grounding systems, shall be protected against accidental shorting by the use of insulation barriers or sleeves.

9.15 Receptacles.

9.15.1 Receptacles shall be installed in locations normally not subject to rain, spray, or flooding, or shall be protected as follows:

(1) Weatherproof if subject to rain or spray
(2) Watertight if subject to flooding

Copyright National Fire Protection Association
Provided by IHS under license with NFPA
No reproduction or networking permitted without license from IHS
Not for Resale

9.15.2 Receptacles and matching plugs used on dc systems shall not be interchangeable with receptacles and matching plugs used elsewhere on the boat for ac systems.

9.16 Plug Connectors. Connectors used in conjunction with harness-type wiring systems shall comply with the following:

(1) Connectors shall incorporate means such as cable clamps, molded connectors, insulation grips, or extended terminal barrels to limit flexing at the connection.
(2) Connectors exposed to weather shall be weatherproof.
(3) Connectors subject to immersion shall be watertight.
(4) Each terminal in a multiwire connector shall be protected from accidental short-circuiting to adjacent terminals.
(5) Connectors shall have provisions such that they will not disengage when a force of 6 lb (26.7 N) is applied along the axial direction of the connector for 1 minute.

Chapter 10 Alternating Current (ac) Electrical Systems on Boats

10.1* Scope. The standards and practices of this chapter establish requirements for the design and installation of ac electrical systems on boats operating at frequencies of 50 or 60 hertz and less than 300 volts, including shore-powered systems up to the point of connection to the shore outlet.

10.2 General Requirements.

10.2.1 Conductor Length Measurement. All lengths for conductors shall be measured along the conductors.

10.2.2 The system shall be polarized.

10.2.3 Grounded Neutral System.

10.2.3.1 A grounded neutral system shall be required unless otherwise permitted by 10.2.4.

10.2.3.2* The neutral shall be grounded only at the power source.

10.2.3.3 A shore power neutral grounded through the shore power cable shall not be grounded on the boat.

10.2.4 Transformer Grounding.

10.2.4.1 On systems using an isolation or polarization transformer, the generator or inverter neutral shall be permitted to be the transformer.

10.2.4.2 Secondary neutrals shall be permitted to be grounded at a main grounding bus instead of at the generator inverter or transformer secondaries.

10.2.5 The boat's ac system grounding (green, or green with yellow stripe) conductor shall be connected to the engine negative terminal or its bus.

10.2.6 Individual circuits shall not be capable of being energized by more than one source of electrical power at a time, and each shore power inlet or generator shall be a separate source of electrical power.

10.2.7 Energized Parts.

10.2.7.1 Energized parts of electrical equipment shall be protected against accidental contact by the use of enclosures or other protective means.

10.2.7.2 The protective means required in 10.2.7.1 shall not be used for nonelectrical equipment and electrical equipment together.

10.2.7.3 Access to enclosures containing energized parts of electrical equipment shall require the use of hand tools.

10.2.8 The transfer from one power source circuit to another shall be made by a means that opens all current-carrying conductors, including neutrals, before closing the alternate source circuit, and that prevents arc over between sources.

10.3 Marking.

10.3.1 Shore Power Inlet Warning.

10.3.1.1 A permanently mounted, waterproof warning label shall be located alongside each shore power inlet location on the boat and shall contain at a minimum the following informational elements, unless permitted otherwise by 10.3.1.2 or 10.3.1.3:

WARNING: Electrical shock and fire hazard. Failure to follow these instructions can result in injury or death.
(1) Turn off the boat's shore connection switch before connecting or disconnecting shore cable.
(2) Connect shore power cable at the boat first.
(3) Immediately disconnect cable if polarity warning indicator is activated.
(4) Disconnect shore power cable at shore outlet first.
(5) Close shore power inlet cover tightly.
(6) Do not alter shore power cable connectors.

10.3.1.2 If a polarity indicator is not required, the informational element (3) shall not be required for the label specified in 10.3.1.1.

10.3.1.3 If the shore power cable is permanently connected to the boat, the informational elements (2) and (5) shall not be required for the label specified in 10.3.1.1.

10.3.2 Marking of Controls.

10.3.2.1 Switches and electrical controls shall be marked to indicate their use unless otherwise permitted by 10.3.2.2.

10.3.2.2 A switch or electrical control shall not be required to be marked where it meets the following criteria:

(1) Its purpose is obvious.
(2) Its erroneous operation cannot cause a hazardous condition.

10.3.3 Marking of Equipment. Electrical equipment, unless it is part of an identified assembly, shall be marked or identified by the manufacturer to indicate the following:

(1) Manufacturer's identification
(2) Model number
(3) Rating in volts and amperes or volts and watts
(4) Phase identification, if applicable
(5) Ignition protection, if applicable

10.4 System Voltage. Nominal system voltages for ac electrical systems shall be one of the following:

(1) 120 volts ac, single-phase
(2) 240 volts ac, single-phase
(3) 120/240 volts ac, single-phase
(4) 120/240 volts ac, delta three-phase
(5) 120/208 volts ac, wye three-phase

10.5 Ambient Temperature. The ambient temperature of machinery spaces shall be considered to be 122°F (50°C), and the ambient temperature of all other spaces shall be considered to be 86°F (30°C).

Copyright National Fire Protection Association
Provided by IHS under license with NFPA
No reproduction or networking permitted without license from IHS
Not for Resale

10.6 Ignition Source.

10.6.1 Potential sources of ignition, except those isolated from a gasoline fuel source in accordance with 10.6.2, shall be ignition protected if located in spaces containing one of the following:

(1) Gasoline-powered machine
(2) Gasoline fuel tank
(3) Joint, fitting, or other connection between components of a gasoline fuel system

10.6.2* An electrical component shall be considered to be isolated from a gasoline fuel source provided that one of the following conditions is met:

(1) The distance between the electrical component and the gasoline fuel source is at least 2 ft (0.6 m), and the space is open to the atmosphere.
(2) Electrical component is located below the gasoline fuel source, and a means is provided to prevent gasoline fuel and vapors that can leak from the gasoline fuel sources from exposure to the electrical component.
(3) Electrical component is located above the gasoline fuel source, and a deck or other enclosure is located between the ignition source and the gasoline fuel source.
(4)*A bulkhead is located between the gasoline fuel source and ignition source that meets the following criteria:
   (a) Separates the electrical component(s) from the gasoline fuel source and extends the length of both the vertical and horizontal distances of the open space between the gasoline fuel source and the ignition source
   (b) Resists a water level of 12 in. (30 cm) or of one-third the maximum height of the bulkhead, whichever is lower, without seepage of more than ¼ fl oz (7.4 ml) of fresh water per hour
   (c) Has no opening higher than 12 in. (30 cm) or one-third the maximum height of the bulkhead, whichever is lower, unless the opening meets the following criteria:
      i. Is used for the passage of items such as conductors, piping, ventilation ducts, and mechanical equipment, or for doors, hatches, and access panels
      ii. Has a maximum annular space around each item passing through it not more than ¼ in. (6.4 mm)

10.7 Shore Power Polarity Devices.

10.7.1* Reverse-polarity indicating devices, having a continuously visible or audible signal shall be installed in 120 volt ac shore power systems, where there is no polarization or isolation transformer that establishes the polarity of the onboard system, and one of the following conditions exists:

(1) The polarity of the system must be maintained for the proper operation of electrical devices in the system.
(2) A branch circuit is provided with overcurrent protection in the ungrounded current-carrying conductors only.

10.7.2 The total impedance of polarity-indicating and protection devices connected between normal current-carrying conductors and the grounding conductor shall be not less than 25,000 ohms at 120 volts, 60 hertz at all times.

10.7.3 Conductors shall be identified to indicate polarity in accordance with Figure 10.7.3(a) through Figure 10.7.3(m).

10.8 Overcurrent Protection.

10.8.1 Rating of Overcurrent Protection Devices.

10.8.1.1 Overcurrent protection devices shall have a temperature rating and demand load characteristics consistent with the protected circuit and their location in the boat (e.g., in a machinery space).

10.8.1.2 The rating of the overcurrent protection device shall not exceed the maximum current-carrying capacity of the conductor being protected.

10.8.2 Circuit Breakers. The following shall apply to circuit breakers:

(1) They shall have an ac voltage rating of not less than the nominal system voltage.
(2) They shall be of the trip-free type.
(3) They shall be capable of an interrupting capacity in accordance with Table 10.8.2.
(4)*They shall meet the marine requirements of one of the following:
   (a) UL 489, *Standard for Safety Molded-Case Circuit Breakers and Circuit-Breaker Enclosures*
   (b) UL 1077, *Standard for Safety Supplementary Protectors for Use in Electrical Equipment*, if used as a branch circuit breaker and it can interrupt the current specified for branch circuit breakers in Table 10.8.2 alone or in combination with the main circuit breaker
   (c) UL 1133, *Standard for Safety Boat Circuit Breakers*
(5)*If located in a space that requires ignition protection, they shall meet the requirements of UL 1500, *Standard for Safety Ignition-Protection Test for Marine Products*, at four times their rated current.

Table 10.8.2 Circuit-Breaker Interrupting Capacity (Amperes)

	Main Shore Power	
Shore Power Source	Disconnect Circuit Breaker	Branch Breaker
120V–30A	3000	3000
120V–50A	3000	3000
120/240V–50A	5000	3000
240V–50 A	5000	3000
120/208V–3-phase/wye 30A	5000	3000
120/240V–100A	5000	3000
120/208V–3-phase/wye 100A	5000	3000

Notes:
1. The main circuit breaker shall be considered the first circuit breaker(s) connected to a source of ac power. All subsequent breakers, including submain breakers connected in series with a main circuit breaker, are considered to be branch circuit breakers.
2. A fuse in series with, and ahead of, a circuit breaker shall be permitted to be required by the circuit-breaker manufacturer to achieve the interrupting capacity specified in Table 10.8.2.

Copyright National Fire Protection Association
Provided by IHS under license with NFPA
No reproduction or networking permitted without license from IHS
Not for Resale

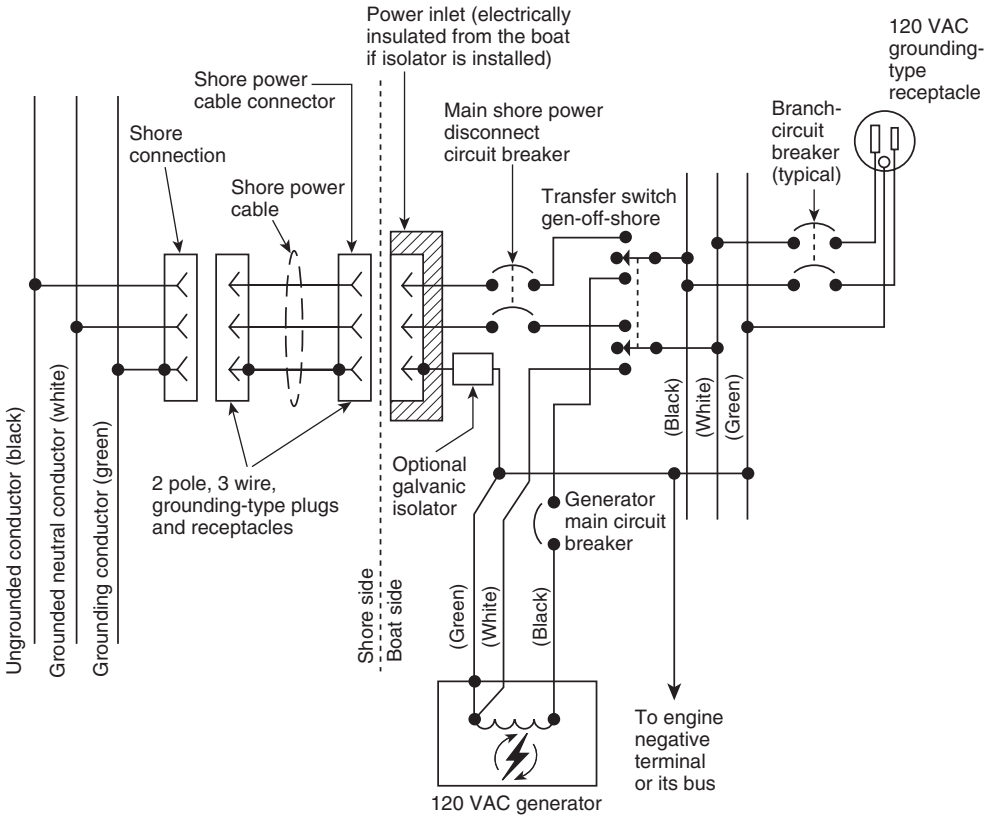

FIGURE 10.7.3(a) Single-Phase 120-Volt Auxiliary Generator Shore Power Selector Switch Circuit.

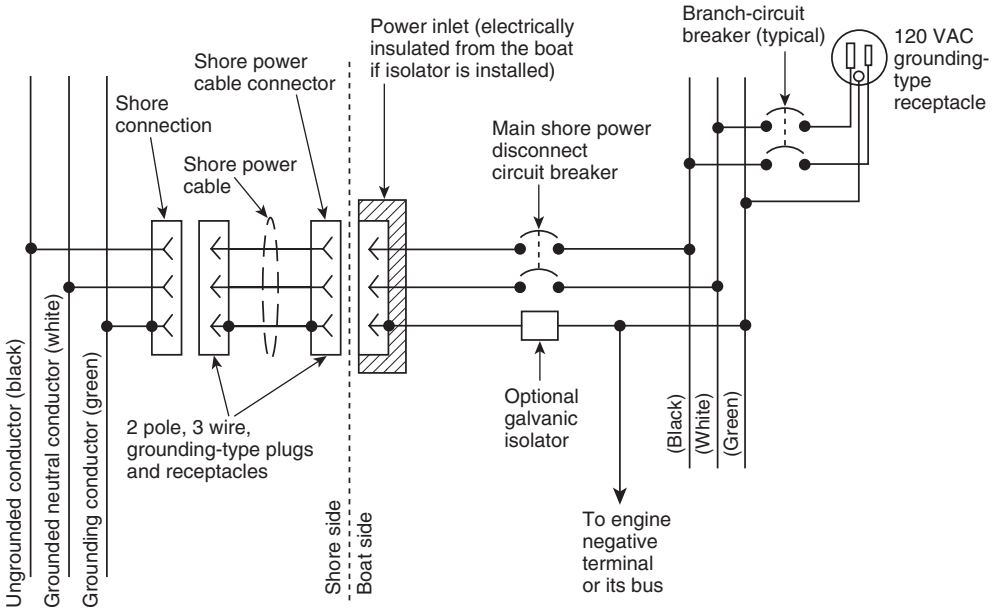

FIGURE 10.7.3(b) Single-Phase 120-Volt System with Shore-Grounded Neutral Conductor and Shore Grounding Conductor.

Copyright National Fire Protection Association
Provided by IHS under license with NFPA
No reproduction or networking permitted without license from IHS
Not for Resale

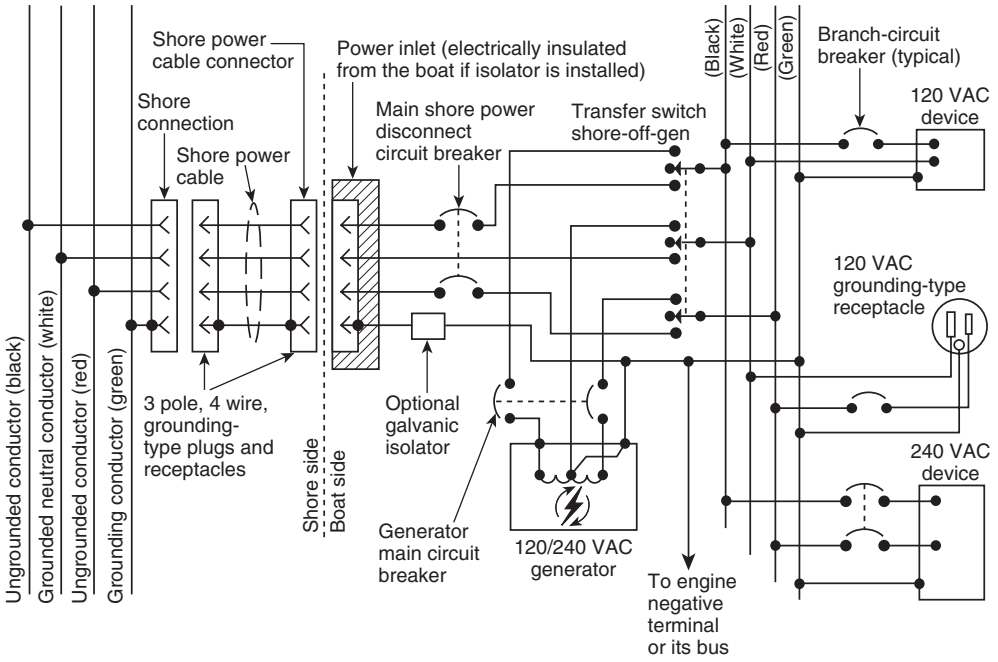

FIGURE 10.7.3(c) Single-Phase 120/240-Volt System with Shore-Grounded Neutral Conductor and Grounding Conductor.

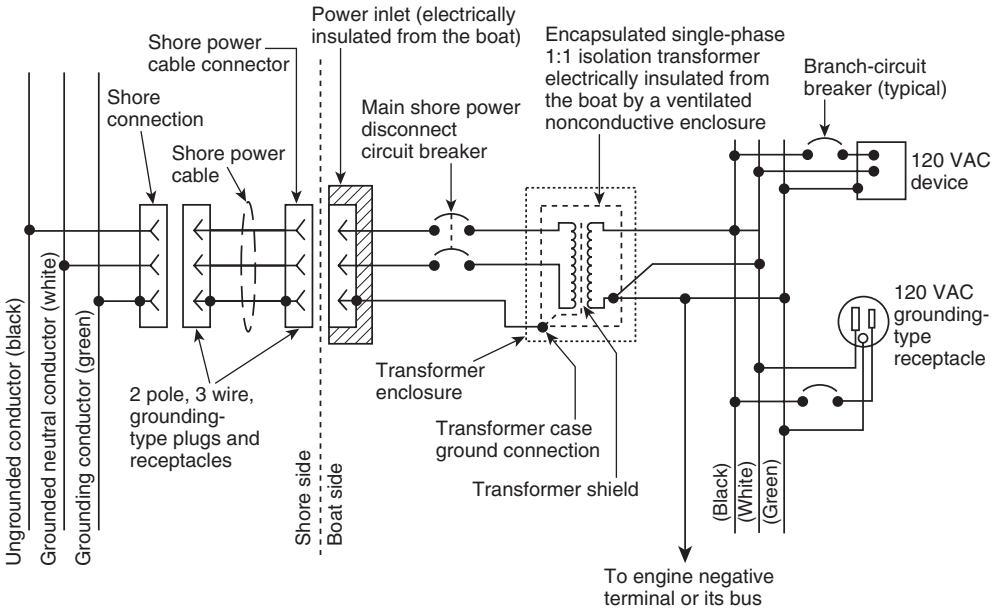

FIGURE 10.7.3(d) Single-Phase 120-Volt Isolation Transformer System with Grounded Secondary.

10.8.3 Fuses. Fuses shall comply with the following:

(1) They shall have an ac voltage rating of not less than the nominal system voltage.

(2) They shall be capable of an interrupting capacity in accordance with Table 10.8.2.

(3)*If located in a space that requires ignition protection, they shall meet the requirements of SAE J1171, *External Ignition Protection for Marine Devices*, or UL 1500, *Standard for Safety Ignition-Protection Test for Marine Products*; and if an internal explosion test is required, the test shall be conducted at no less than 4 times the current rating of the fuse.

(4) They shall meet the requirements of the applicable part of UL 248, *Low Voltage Fuses,* as dictated by the fuse class.

--`,,,,`-`-`,,`,,`,`,,`---
Copyright National Fire Protection Association
Provided by IHS under license with NFPA
No reproduction or networking permitted without license from IHS
Not for Resale

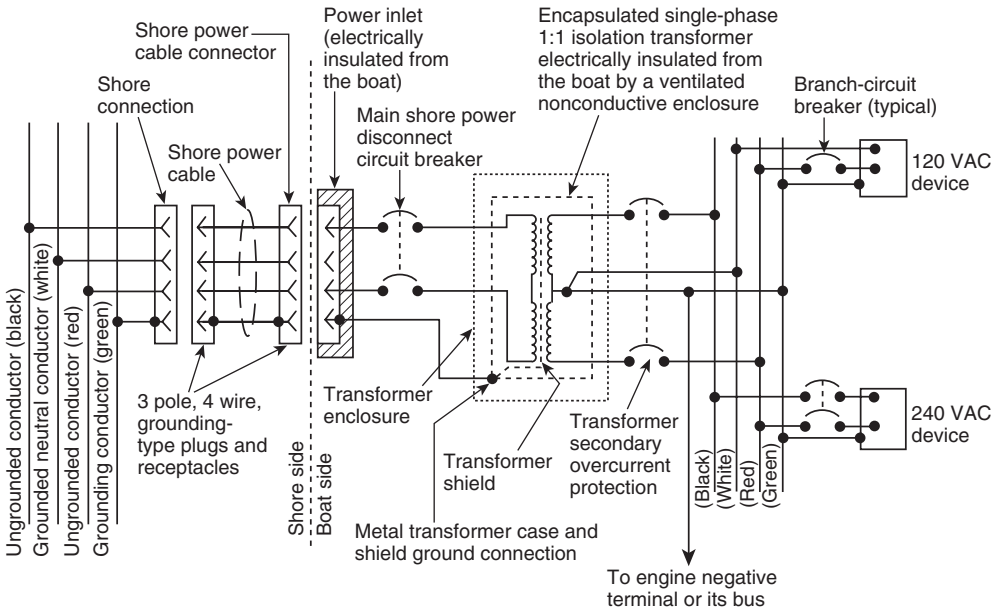

FIGURE 10.7.3(e) Isolation Transformer System with Single-Phase 240-Volt Input and 120/240-Volt Single-Phase Output.

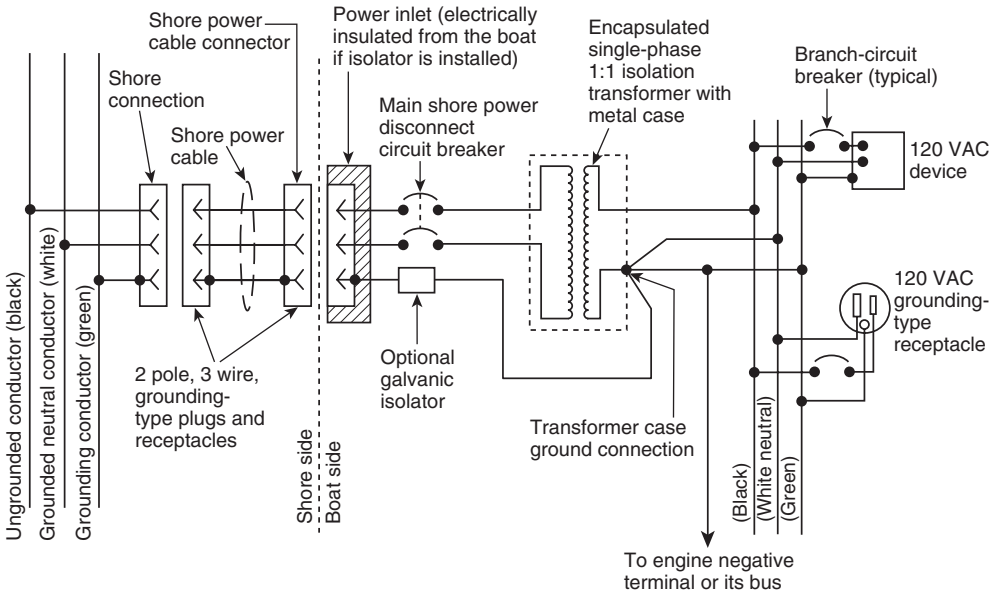

FIGURE 10.7.3(f) Single-Phase 120-Volt Polarization Transformer System with Shore Grounding Wire Protection of Transformer Primary.

10.8.4 Fuse Holders. Fuse holders shall meet the requirements of UL 512, *Standard for Safety Fuseholders*, for the class of fuse being used.

10.9 Main Supply.

10.9.1 Common-trip circuit breakers shall be provided in main supply conductors as follows:

(1) 120-volt ac, single-phase — ungrounded and grounded conductors (white)

(2) 240-volt ac, single-phase — both ungrounded conductors

(3) 120/240-volt ac, single-phase — both ungrounded conductors

(4) 120/240-volt ac, delta three-phase — all ungrounded conductors

(5) 120/208-volt ac, wye three-phase — all ungrounded conductors

Copyright National Fire Protection Association
Provided by IHS under license with NFPA
No reproduction or networking permitted without license from IHS
Not for Resale

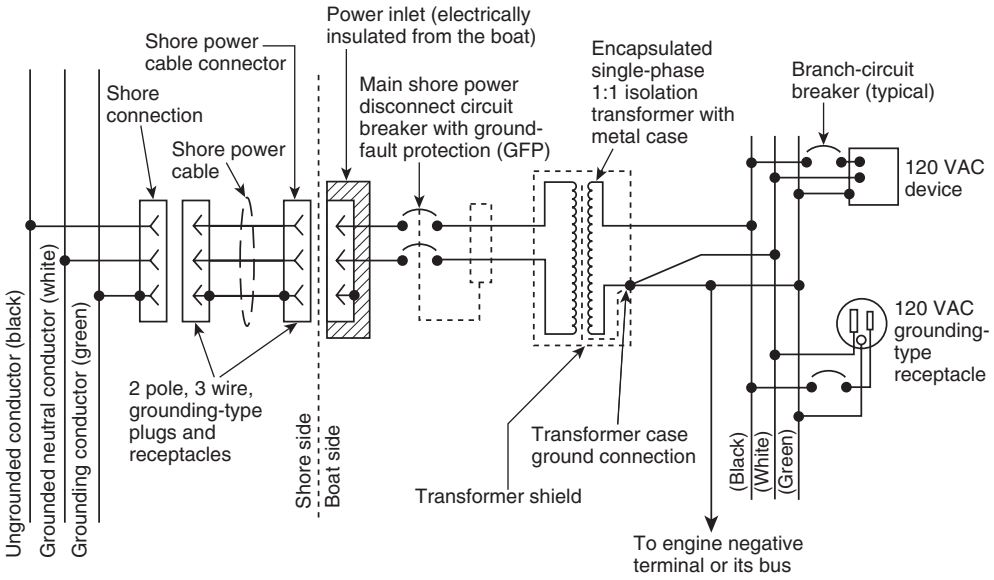

FIGURE 10.7.3(g) Single-Phase 120-Volt Isolation Transformer System with Ground-Fault Circuit-Interrupter (GFCI) Protection of Transformer Primary.

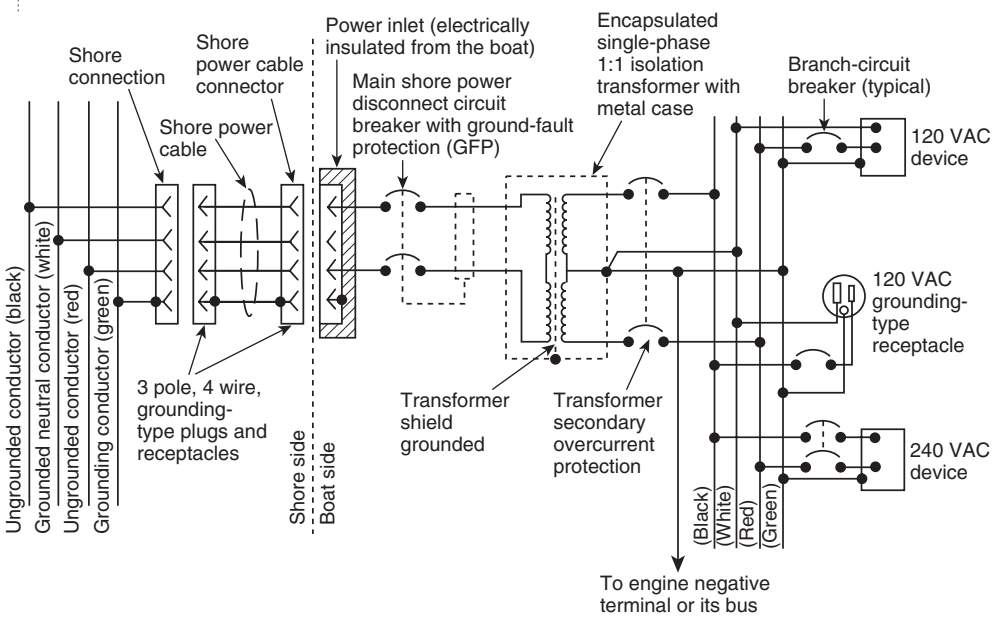

FIGURE 10.7.3(h) Isolation Transformer System — Single-Phase 240-Volt Input and 120/240-Volt Single-Phase Output with Ground-Fault Circuit-Interrupter (GFCI) Protection of Transformer Primary.

10.9.2 Supply Feeders Exceeding 10 ft (3 m).

10.9.2.1* If the location of the main feeder supply disconnect circuit breaker is in excess of 10 ft (3 m) from the shore power inlet or the electrical attachment point of a permanently installed shore power cord, additional fuses or circuit breakers shall be provided within 10 ft (3 m) of the inlet or attachment point to the electrical system of the boat.

10.9.2.2 If additional fuses are required by 10.9.2.1, their rating shall be such that circuit breakers trip before the fuses open the circuit in the event of overload.

10.9.2.3 If additional fuses are required by 10.9.2.1, the ampere rating of the additional fuses or circuit breaker shall not exceed 125 percent of the rating of the main shore power disconnect circuit breaker.

Copyright National Fire Protection Association
Provided by IHS under license with NFPA
No reproduction or networking permitted without license from IHS
Not for Resale

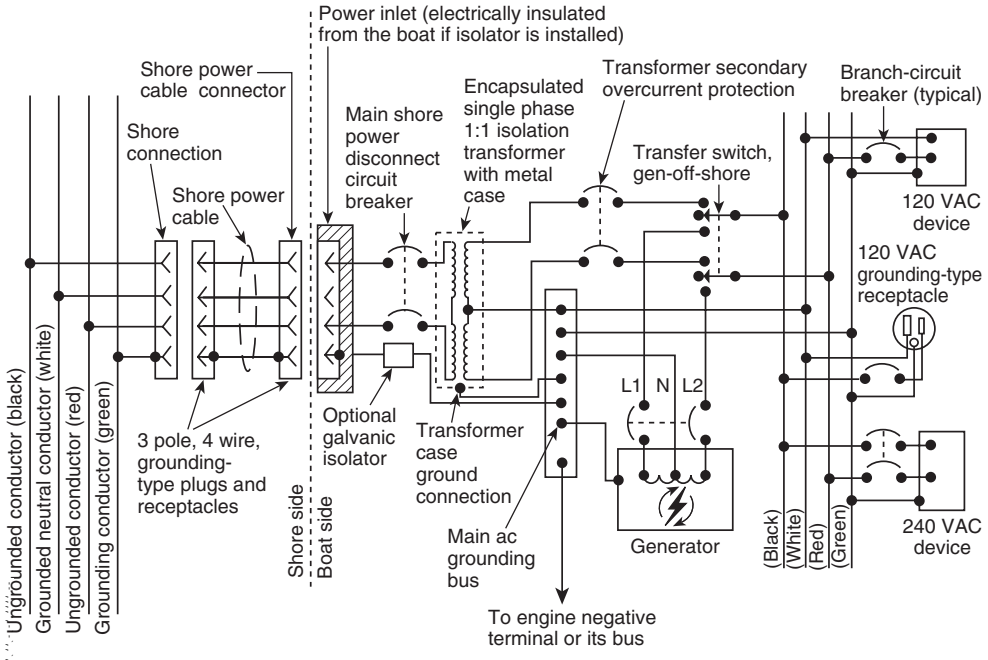

FIGURE 10.7.3(i) Single-Phase Polarization Transformer System with Single-Phase 240-Volt Input and 120/240-Volt Single-Phase Output — Shore Grounding Protection of Transformer.

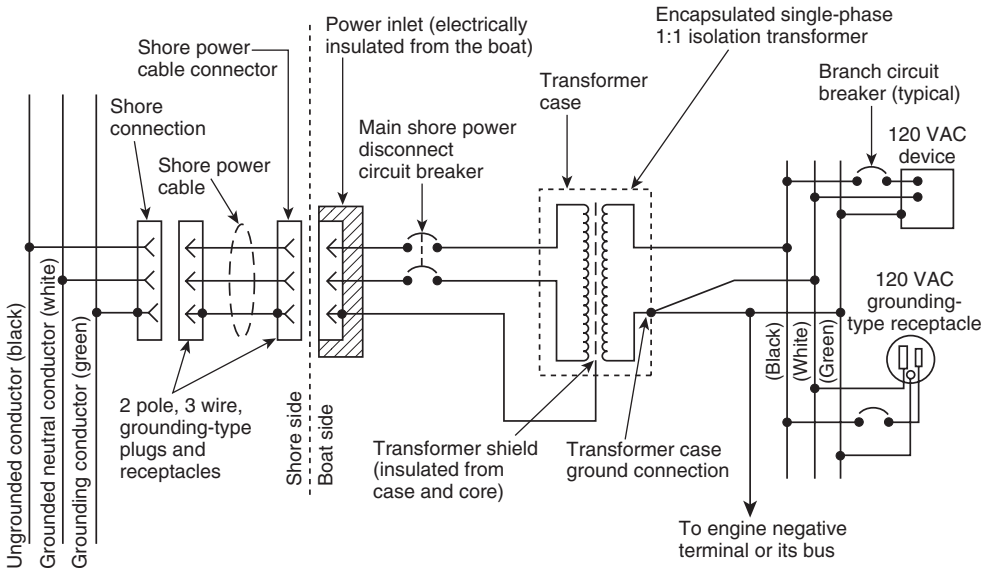

FIGURE 10.7.3(j) Single-Phase 120-Volt Isolation Transformer System with Boat-Grounded Secondary, Shore-Grounded Transformer Shield, and Boat-Grounded Transformer Metal Case.

10.9.3* Overcurrent Protection Location. Conductors shall be provided with overcurrent protection at the source of power unless permitted by 10.9.3.1, 10.9.3.2, or 10.9.3.3.

10.9.3.1 Where not practical to locate overcurrent protection at the source of power, conductors shall be provided with overcurrent protection no more than 7 in. (18 cm) from the point at which the conductor is connected to the source of power measured along the conductor.

10.9.3.2 If the conductor is contained in a sheath or enclosure, such as a junction box, control box, or enclosed panel, throughout the required distance, and where not practical to locate overcurrent protection at the source of power, conductors shall be provided with overcurrent protection no more than 40 in. (102 cm) from the point at which the conductor is connected to the source of power.

Copyright National Fire Protection Association
Provided by IHS under license with NFPA
No reproduction or networking permitted without license from IHS
Not for Resale

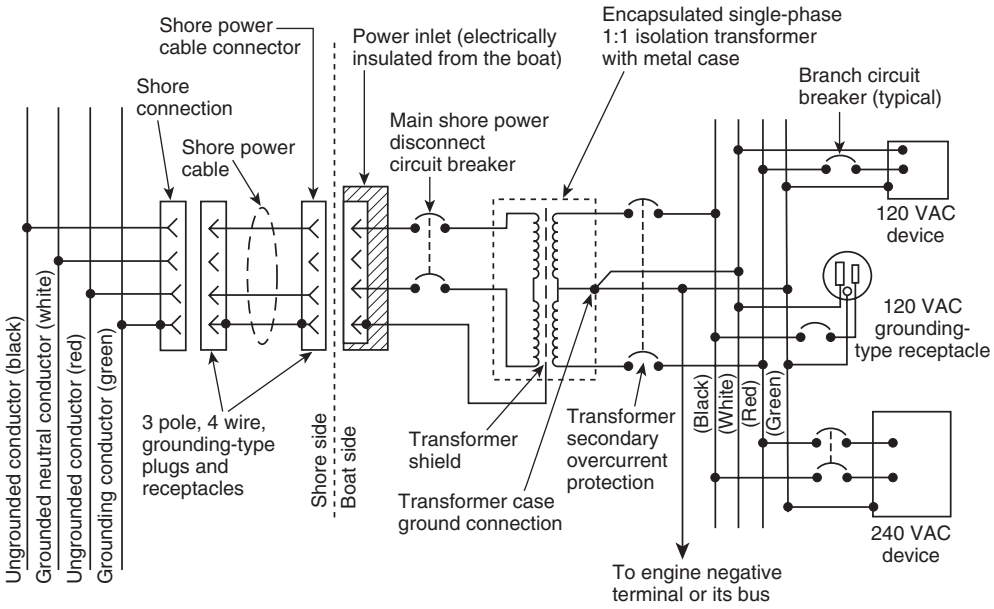

FIGURE 10.7.3(k) Isolation Transformer System — Single-Phase 240-Volt Input and 120/240-Volt Output with Boat-Grounded Secondary, Shore-Grounded Transformer Shield, and Boat-Grounded Transformer Metal Case.

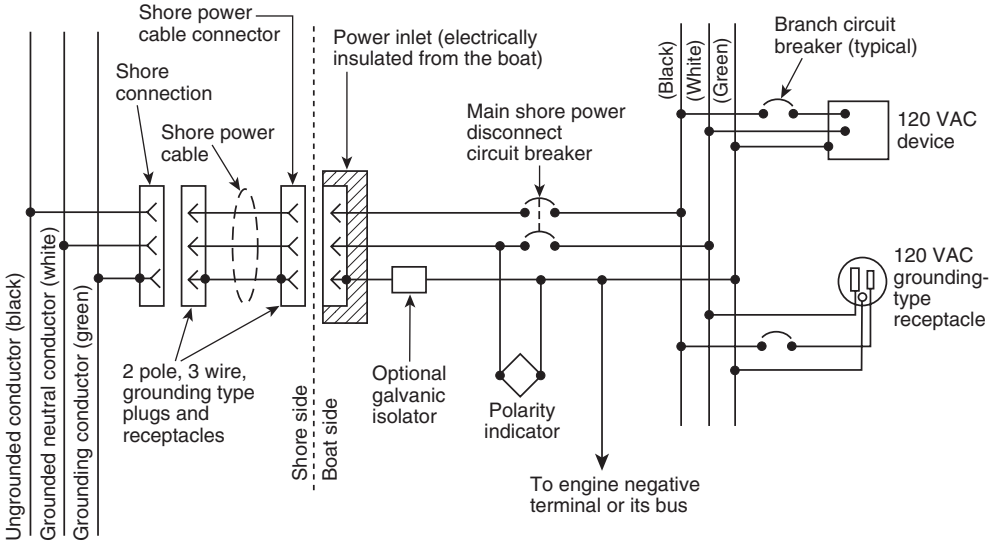

FIGURE 10.7.3(l) Single-Phase 120-Volt System with Polarity Indicating Device, Shore-Grounded Neutral Conductor, and Shore-Grounded Grounding Conductor.

10.9.3.3 If the conductor is connected directly to the battery terminal, and where not practical to locate overcurrent protection at the source of power, conductors shall be provided with overcurrent protection no more than 72 in. (183 cm) from the battery terminal.

10.9.4 Self-limiting generators, whose maximum overload current does not exceed 120 percent of its rated current output, shall not be required to have external overcurrent protection.

10.10 Branch Circuits.

10.10.1 Ungrounded Conductor.

10.10.1.1 Each ungrounded conductor of a branch circuit shall be provided with overcurrent protection at the point of connection to the panelboard bus.

10.10.1.2 Each circuit breaker or fuse required by 10.10.1.1 shall not be rated in excess of the current rating of the smallest conductor between the fuse or circuit breaker and the load.

Copyright National Fire Protection Association
Provided by IHS under license with NFPA
No reproduction or networking permitted without license from IHS
Not for Resale

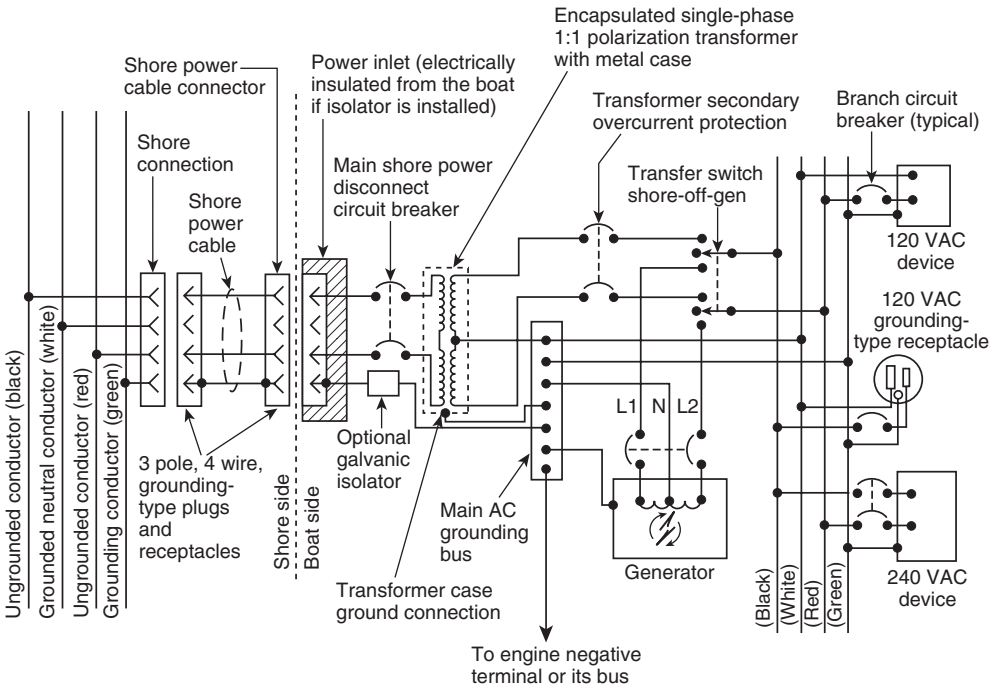

FIGURE 10.7.3(m) Polarization Transformer System — Single-Phase 240-Volt Input and 120/240-Volt Output — Generator with Main ac Grounding Bus.

10.10.2 In branch circuits, circuit breakers and switches shall open all grounded and ungrounded conductors simultaneously except for the following conductors:

(1) A polarized circuit with a polarity indicator
(2) The neutral leg of a grounded secondary of a polarization or isolation transformer

10.10.3 Fuses shall not be used in the grounded conductor.

10.10.4 If circuits contain two or more ungrounded current-carrying conductors that are protected by fuses, means shall be provided to disconnect all energized legs of the circuit simultaneously or to remove all fuses from the circuit simultaneously.

10.10.5 All ac branch-circuit conductors to receptacles or equipment, other than those contained completely within equipment or enclosures, shall be of the jacketed type.

10.10.6 Alternating Current (ac) Motors.

10.10.6.1 Each motor or motor-operated device shall be individually protected by an overcurrent protection device unless the motor will not overheat under locked rotor conditions.

10.10.6.2 The overcurrent protection device shall not be rated at more than 125 percent of the motor full-load current rating.

10.10.6.3 The overcurrent protection device shall be permitted to be integral and of an automatic resetting type.

10.10.7 Battery Chargers.

10.10.7.1 Each ungrounded conductor to a battery charger shall be provided with overcurrent protection at the point of connection to the main switchboard or the distribution panel.

10.10.7.2 Battery chargers and their installation shall comply with the requirements of ABYC A-20, *Battery Charging Devices.*

10.11 Ground-Fault Circuit Interrupters (GFCIs).

10.11.1 A GFCI shall be permitted to be used on any single-phase ac circuit and shall be used for all receptacles in a head, a galley, or a machinery space or on a weather deck as required by 10.15.7.

10.11.2 GFCI breakers shall comply with the following:

(1) They shall meet the requirements of UL 943, *Standard for Safety Ground-Fault Circuit-Interrupters,* and UL 489, *Standard for Safety Molded-Case Circuit Breakers and Circuit-Breaker Enclosures.*
(2) They shall be permitted to be installed as panelboard feeder breakers to protect all associated circuits, or in individual branch circuits.

10.11.3 GFCI receptacle devices shall comply with the following:

(1) They shall meet the requirements of UL 943, *Standard for Safety Ground-Fault Circuit-Interrupters,* and UL 498, *Standard for Safety Attachment Plugs and Receptacles.*
(2) They shall be permitted to be installed as part of a convenience outlet installation, either in single outlet applications or in multiple "feed-through" installations.

10.11.4* GFP circuit breakers shall be permitted to be installed as the main breaker on the primary side of isolation transformers.

10.12 Appliances and Equipment.

10.12.1 Appliances and fixed ac electrical equipment used on boats shall be designed so that the current-carrying parts of the device are insulated effectively from all exposed electrically conductive parts.

Copyright National Fire Protection Association
Provided by IHS under license with NFPA
No reproduction or networking permitted without license from IHS
Not for Resale

10.12.2 All exposed electrically conductive noncurrent-carrying parts of fixed ac electrical equipment and appliances intended to be grounded shall be connected to the grounding system.

10.12.3 If an appliance has a neutral-to-ground bonding strap, the bonding strap shall be removed.

10.13 Conductors and Flexible Cords.

10.13.1 Conductors shall have a minimum rating of 600 volts.

10.13.2 Flexible cords shall have a minimum rating of 300 volts.

10.13.3 Conductors shall be selected from the types specified in Table 9.12.3(b).

10.13.4 Flexible cords shall be selected from the types specified in Table 9.12.4.

10.13.5 Conductors and flexible cords shall be of stranded copper with circular mil area and stranding in accordance with Table 10.13.5.

Table 10.13.5 Conductor Circular Mil (CM) Area and Stranding

Conductor Size (AWG)	Nominal CM Area[a]	Minimum Number of Strands	
		Type 2[b]	Type 3[c]
18	1,620	16	—
16	2,580	19	26
14	4,110	19	41
12	6,530	19	65
10	10,380	19	105
8	16,510	19	168
6	26,240	37	266
4	41,740	61	420
2	66,360	127	665
1	83,690	127	836
1/0	105,600	127	1064
2/0	133,100	127	1323
3/0	167,800	259	1666
4/0	211,600	418	2107

Note: Metric wire sizes can be used if of equivalent circular mil area. If the circular mil area of the metric conductor is less than that listed, the wire ampacity needs to be corrected based on the ratio of the circular mil areas.

[a] To recognize stranded conductors made of AWG elements, note that the actual nominal CM area can differ from the specified nominal CM area but by no more than 7 percent. The circular mil area is equal to the mathematical square of the specified diameter of the AWG stranded solid copper conductor measured in one-thousandths of an inch, as shown in the following equation:

$$\text{Area in.}^2 = \frac{\pi \times (\text{circular mils})}{4(1{,}000{,}000)}$$

[b] Conductors with Type 2 stranding shall be permitted to be used for wiring that is subject to movement from vibration or minor flexing. If four or more conductors are run in a cable, Type 2 stranding shall be permitted to be used for frequent flexing applications.

[c] Conductors with Type 3 stranding shall be used for any wiring where frequent flexing is involved in normal use.

10.13.6 Conductor sizes, as determined by Table 10.13.5, shall not carry current greater than that indicated in Table 10.13.6(a), based on the temperature rating of the wire, and the following derating factors:

(1) Conductors used in or routed through an engine space shall be corrected in accordance with Table 10.13.6(b).
(2) Current-carrying conductors that are bundled shall be derated in accordance with Table 10.13.6(c).

10.13.7 Conductors, other than those contained completely within equipment or enclosures, shall be at least No. 16 AWG.

10.13.8 All conductors shall meet UL 1426, *Standard for Safety Electrical Cables for Boats*, and shall be so labeled.

10.14 Installation.

10.14.1 All connections normally carrying current shall be made in enclosures with interior surfaces having a flame spread rating of not more than 25 as tested in accordance with NFPA 255, *Standard Method of Test of Surface Burning Characteristics of Building Materials*.

10.14.2 All conductors, other than those contained completely within equipment or enclosures, shall be supported to relieve strain on connections.

10.14.3 Where ac and dc conductors are run together, other than conductors contained completely within equipment or enclosures, the ac conductors shall be sheathed, bundled, or otherwise kept separate from the dc conductors.

10.14.4* Conductor Support.

10.14.4.1 Conductors shall be supported for their entire length unless permitted otherwise by 10.14.4.2 through 10.14.4.4.

10.14.4.2 Conductors shall be permitted to be supported at least every 18 in. (46 cm) by nonmetallic clamps of a size to hold the conductors firmly in place.

10.14.4.2.1 Nonmetallic straps or clamps shall not be used over engine(s), moving shafts, other machinery, or passageways if failure can result in a hazardous condition.

10.14.4.2.2 Conductor material shall be resistant to oil, gasoline, and water and shall not break or crack under flexing within a temperature range of –30°F to 250°F (–34°C to 121°C).

10.14.4.3 Metal Straps with Insulating Material.

10.14.4.3.1 Conductors shall be permitted to be supported at least every 18 in. (46 cm) by metal straps or clamps with smooth, rounded edges to hold the conductors firmly in place without damage to the conductors or insulation.

10.14.4.3.2 Sections of the conductor or cable located directly under the strap or clamp shall be protected by means of loom, tape, or other suitable wrapping to prevent injury to the conductor.

10.14.4.4 Conductors shall be permitted to be supported at least every 18 in. (46 cm) by metal clamps lined with an insulating material resistant to the effects of oil, gasoline, and water.

10.14.5 Junction boxes, cabinets, and other enclosures in which electrical connections are made shall be weatherproof or installed in a protected location to minimize the entrance or accumulation of moisture or water within the boxes, cabinets, or enclosures.

--`,,,,`,-`-`,,`,,`,`,,`---

Copyright National Fire Protection Association
Provided by IHS under license with NFPA
No reproduction or networking permitted without license from IHS
Not for Resale

Table 10.13.6(a) Ampacities of Insulated Conductors

	Temperature Rating of Conductor Insulation						
Conductor Size (AWG)	**60°C (140°F)**	**75°C (167°F)**	**80°C (176°F)**	**90°C (194°F)**	**105°C (221°F)**	**125°C (257°F)**	**200°C (392°F)**
18	10	10	15	20	20	25	25
16	15	15	20	25	25	30	35
14	20	20	25	30	35	40	45
12	25	25	35	40	45	50	55
10	40	40	50	55	60	70	70
8	55	65	70	70	80	90	100
6	80	95	100	100	120	125	135
4	105	125	130	135	160	170	180
3	120	145	150	155	180	195	210
2	140	170	175	180	210	225	240
1	165	195	210	210	245	265	280
0	195	230	245	245	285	305	325
00	225	265	285	285	330	355	370
000	260	310	330	330	385	410	430
0000	300	360	385	385	445	475	510

Table 10.13.6(b) Engine Room Temperature Derating Factor

	60°C (140°F)	**75°C (167°F)**	**80°C (176°F)**	**90°C (194°F)**	**105°C (221°F)**	**125°C (257°F)**	**220°C (392°F)**
Temperature rating of conductor	0.58	0.75	0.78	0.82	0.85	0.89	1.00

Table 10.13.6(c) Current-Carrying Conductor Bundling Derating Factor

Number of Energized Wires in a Bundle	**Correction Factor**
3	0.70
4 to 6	0.60
7 to 24	0.50
25 and above	0.40

10.14.6 In wet locations, metallic boxes, cabinets, or enclosures shall be mounted to minimize the entrapment of moisture between the box, cabinet, or enclosure and the adjacent structure.

10.14.7 If an air space is used to achieve the requirement of 10.14.6, the space shall be no less than ¼ in. (6.4 mm).

10.14.8 Unused openings in boxes, cabinets, and weatherproof enclosures shall be closed.

10.14.9* Current-carrying conductors shall be routed above the bilge water level and other areas where water can accumulate unless the wiring is of a submersible type, and connections shall be watertight.

10.14.10* Conductors shall be routed in accordance with the following criteria:

(1) Unless an equivalent thermal barrier is provided, there shall be a clearance of no less than 2 in. (5 cm) between conductors and water-cooled exhaust components.
(2) There shall be a clearance of no less than 9 in. (23 cm) between conductors and dry exhaust components where the conductor is not directly above the exhaust.
(3) Conductors shall not be routed directly above a dry exhaust.

10.14.11 Physical Damage.

10.14.11.1 Conductors subject to physical damage shall be protected by loom, conduit, tape, raceways, or other equivalent protection.

10.14.11.2 The protection required by 10.14.11.1 shall be self-draining.

10.14.11.3 Conductors passing through or around bulkheads or structural members shall be protected to minimize insulation damage such as chafing or compression.

10.14.11.4 Conductors also shall be routed clear of sources of chafing such as steering cable and linkages, engine shafts, and throttle connections.

10.14.12 All permanently installed appliances and utilization equipment shall be mounted securely to the boat's structure.

10.14.13 Wiring Connections.

10.14.13.1 Wiring connections shall be designed and installed to make mechanical and electrical joints without damage to the conductors.

Copyright National Fire Protection Association
Provided by IHS under license with NFPA
No reproduction or networking permitted without license from IHS
Not for Resale

10.14.13.2 Metals.

10.14.13.2.1 Metals used for the terminal studs, nuts, and washers shall be corrosion resistant and galvanically compatible with the conductor and terminal lug.

10.14.13.2.2 Aluminum and unplated steel shall not be used for studs, nuts, and washers.

10.14.13.2.3 Each conductor splice joining conductor to conductor, conductor to connectors, and conductor to terminals shall be able to withstand a tensile force equal to at least the value shown in Table 9.14.3 for the smallest conductor size used in the splice for a 1-minute duration without breaking.

10.14.13.3 Terminal Connectors.

10.14.13.3.1 Terminal connectors shall be of the ring or captive spade type unless permitted otherwise by 10.14.13.3.2.

10.14.13.3.2 Terminal connectors shall be permitted to be of the friction type where the following conditions are met:

(1) Circuit is rated at not more than 20 amperes or the manufacturer's rating if the terminal design meets the requirements of UL 310, *Standard for Electrical Quick-Connect Terminals*, or UL 1059, *Standard for Terminal Blocks*.
(2) Voltage drop from terminal to terminal does not exceed 50 millivolts for a 20-ampere current flow.
(3) Connection does not separate if subjected to a 6 lb (26.7 N) tensile force along the axial direction of the connector for 1 minute.

10.14.14 Set-Screw, Pressure-Type Connectors.

10.14.14.1 Connections shall be permitted to be made using a set-screw, pressure-type conductor connector.

10.14.14.2 The connectors addressed in 10.14.14.1 shall be provided with a means to prevent the set screw from bearing directly on the conductor strands.

10.14.15 Twist-on connectors (wire nuts) shall not be used.

10.14.16 Solder shall not be the sole means of mechanical connection in any circuit unless the conductor is contained completely within equipment or enclosures.

10.14.17 Solderless crimp-on connectors shall be attached with the type of crimping tools designed for the connector used.

10.14.18 No more than four conductors shall be secured to any terminal stud.

10.14.19 Two or more terminal studs shall be connected together by means of jumpers or copper straps where more than four conductors would be needed at a terminal stud.

10.14.20 Terminal connectors of the ring and captive spade type shall be the same nominal size as the stud.

10.14.21 Conductors terminating at panelboards in junction boxes or fixtures shall be arranged to provide a length of conductor to relieve tension, to allow for repairs, and to permit multiple conductors to be fanned at terminal studs.

10.14.22 The shanks of terminals, other than those used in grounding systems, shall be protected against accidental shorting by the use of insulation barriers or sleeves.

10.15 Receptacles.

10.15.1 Receptacles shall be installed in locations normally not subject to rain, spray, or flooding, or shall be protected as follows:

(1) Weatherproof if subject to rain or spray
(2) Watertight if subject to flooding

10.15.2 Receptacles shall be of the grounding type with a terminal provided for the grounding (green, or green with yellow stripe) conductor in accordance with ANSI/NEMA WD-6, *Wiring Devices — Dimensional Requirements*.

10.15.3 Receptacles and matching plugs used on ac systems shall not be interchangeable with receptacles and matching plugs used on dc systems.

10.15.4 Power wiring for receptacles shall be connected as follows:

(1) They shall be connected so that the grounded (white) conductor attaches to the terminal identified by a letter(s) or a light color (normally silver).
(2) They shall be connected so that the ungrounded conductor(s) shall be attached to the terminal identified by a letter(s) or a dark color (normally brass or copper).

10.15.5 A branch circuit supplying a combination of receptacle loads and permanently connected loads shall not supply fixed loads in excess of the following:

(1) 600 W for a 15-ampere circuit
(2) 1000 W for a 20-ampere circuit

10.15.6 Receptacles provided for the galley shall be located so that, when appliance cords are plugged in, they do not cross a traffic area, galley stove, or sink.

10.15.7* If installed in a head, a galley, or a machinery space or on a weather deck, the receptacle shall be protected by a Type A (nominal 5 milliamperes) GFCI.

10.15.8 Electrical systems not equipped with polarity indicators using two-pole circuit breakers shall use a two-pole GFCI breaker in place of single-pole GFCI receptacles in the circuits that supply receptacles, unless the system employs polarization or isolation transformers that establish the polarity on the boat.

10.16 Main Panelboard.

10.16.1 A main panelboard shall meet the following criteria:

(1) It shall be installed in a readily accessible location.
(2) It shall be weatherproof or protected from weather and splash.

10.16.2 A main panelboard shall be permitted to serve as a distribution center.

10.16.3 Boats equipped with both ac and dc electrical systems shall have their distribution on separate panelboards or, in the case of systems with combined ac and dc panelboards, the panel shall be designed so that when the panel is open there is no access to energized ac parts without the use of tools.

10.16.4 Panelboards shall be permanently marked with the system voltage value and either "VAC" or the system frequency (e.g., "120 VAC" or "120V-60 hertz").

10.16.5 If the frequency is other than 60 hertz, the frequency shall be indicated.

10.16.6 For three-phase systems the following shall be indicated:

(1) System voltage
(2) Phase
(3) Number of conductors

Copyright National Fire Protection Association
Provided by IHS under license with NFPA
No reproduction or networking permitted without license from IHS
Not for Resale

10.16.7 Voltmeters.

10.16.7.1 A system voltmeter shall be installed for any of the following situations:

(1) System is designed to supply motor circuits.
(2) Onboard generator is installed.
(3) Inverter.

10.16.7.2 Where a voltmeter is required by 10.16.7.1(3), the voltmeter shall be located on or in close proximity to the panelboard.

10.17 Alternating-Current (ac) Generators.

10.17.1 Alternating-current generators shall be connected to the electrical distribution system through a selector switch in accordance with 10.2.8 and Figure 10.7.3(a) through Figure 10.7.3(m).

10.17.2 Power Feeders.

10.17.2.1 Power feeders from ac generators shall be sized to accommodate at least the generator's maximum rated output.

10.17.2.2 The power feeder shall be protected at the generator with overcurrent protection devices in accordance with Section 10.8 unless the generator is a self-limiting generator having a maximum overload current of no more than 120 percent of the generator's rated current output.

10.17.2.3 The rating of overcurrent protection devices required by 10.17.2.2 shall not exceed 120 percent of the generator's rated output.

10.18 Isolation of Galvanic Currents.

10.18.1 Boats using an isolation transformer to reduce galvanic corrosion shall use an isolation transformer system in accordance with ABYC E-11, *AC and DC Electrical Systems On Boats*, and 10.20.4 or 10.20.7.

10.18.2 Boats using a galvanic isolator to reduce galvanic corrosion shall use a galvanic isolator in the grounding conductor in accordance with ABYC A-28, *Galvanic Isolators*.

10.19 Shore Power.

10.19.1 Power Inlet.

10.19.1.1 The receptacle installed to receive a connecting cable to carry ac shore power aboard shall be a male-type connector.

10.19.1.2 Power inlets shall comply with the following:

(1) Power inlets installed in locations subject to rain, spray, or splash shall be weatherproof, whether or not in use.
(2) Power inlets installed in areas subject to flooding or momentary submersion shall be watertight, whether or not in use.
(3) A warning label shall be located alongside each shore power inlet location on the boat. *(See 10.3.1.)*
(4) If a boat uses an isolation transformer or an isolator to prevent galvanic current flow through the grounding conductor, the metallic shell of the shore power inlet shall be insulated from metallic surfaces or any contact with a boat ground. *[See Figure 10.7.3(d) through Figure 10.7.3(i).]*

10.19.2 Shore Power Cable. Boats with an ac electrical system(s) intended to use shore power provided in accordance with NFPA 70, *National Electrical Code*, Article 555, and NFPA 303, *Fire Protection Standard for Marinas and Boatyards*, shall be provided with a shore power cable that complies with the following criteria:

(1) A male locking and grounding-type connection that conforms with NFPA 70, *National Electrical Code*, Article 555, and ANSI/NEMA WD-6, *Wiring Devices — Dimensional Requirements*, if a configuration for that service exists in ANSI/NEMA WD-6
(2) A female boat connection of the locking and grounding type that conforms with ANSI/NEMA WD-6, *Wiring Devices — Dimensional Requirements*, if a configuration for that service exists in ANSI/NEMA WD-6, unless the shore power cable is permanently connected to the boat and the boat end of the cable is terminated with a locking and grounding female type connector to match the boat power inlet.
(3) A minimum length of 25 ft (7.6 m) and meets the marine requirements of UL 817, *Standard for Safety Cord Sets and Power-Supply Cords*

10.20 Application of Types of Shore Power Circuits.

10.20.1 Single-Phase 120-Volt System with Shore-Grounded Neutral Conductor and Shore Grounding Conductor.

10.20.1.1 The system specified in 10.20.1 shall be permitted to be used on any nonmetallic hull boat with underwater hardware of metal alloys that are at least as galvanically noble as manganese bronze.

10.20.1.2 The system specified in 10.20.1 shall be permitted to be used with metal hull boats if protection against galvanic corrosion is provided by means of a cathodic protection system or a galvanic isolator.

10.20.1.3 The system shall be wired in accordance with the basic circuit shown in Figure 10.7.3(b).

10.20.2 Single-Phase 120/240-Volt System with Shore-Grounded Neutral Conductor and Shore Grounding Conductor.

10.20.2.1 The system specified in 10.20.2 shall be permitted to be used on any nonmetallic hull boat with underwater hardware of metal alloys that are at least as galvanically noble as manganese bronze.

10.20.2.2 The system specified in 10.20.2 shall be permitted to be used with metal hull boats if protection against galvanic corrosion is provided by means of a cathodic protection system or a galvanic isolator.

10.20.2.3 The system shall be wired in accordance with the basic circuit shown in Figure 10.7.3(c).

10.20.3 Single-Phase 120-Volt Primary and Secondary Isolation Transformer System.

10.20.3.1 With shore grounding protection of the transformer core, the system specified in 10.20.3 shall be permitted to be used with any metallic or nonmetallic hull boat.

10.20.3.2 The system shall be wired in accordance with the basic circuit shown in Figure 10.7.3(d).

10.20.3.3 The grounded transformer core and the metallic shell of the shore power inlet shall be insulated from contact with any boat ground.

10.20.3.4 The transformer secondary shall be grounded on the boat.

Copyright National Fire Protection Association
Provided by IHS under license with NFPA
No reproduction or networking permitted without license from IHS
Not for Resale

10.20.4 Isolation Transformer with Single-Phase 240-Volt Input and 120/240-Volt Output with Shore Grounding Protection of Transformer Core.

10.20.4.1 The system specified in 10.20.4 shall be permitted to be used with any boat.

10.20.4.2 The system specified in 10.20.4 shall be used on all metal hull boats if other means of protection against galvanic corrosion, such as a galvanic isolator, is not provided.

10.20.4.3 The system shall be wired in accordance with the basic circuit shown in Figure 10.7.3(e).

10.20.4.4 The metallic shell of the shore power inlet shall be insulated from contact with any boat ground.

10.20.4.5 The center leg of the transformer secondary shall be grounded on the boat, establishing a new neutral for the boat system.

10.20.5 Single-Phase 120-Volt Primary and Secondary Polarization Transformer System with Shore-Grounded Neutral and Shore Grounding Protection of Transformer.

10.20.5.1 The system specified in 10.20.5 shall be permitted to be used on any nonmetallic hull boat with underwater hardware of metal alloys that are at least as galvanically noble as manganese bronze.

10.20.5.2 The system specified in 10.20.5 shall be permitted to be used with metal hull boats if protection against galvanic corrosion is provided by means of a cathodic protection system or a galvanic isolator.

10.20.5.3 The system shall be wired in accordance with the basic circuit shown in Figure 10.7.3(f).

10.20.5.4 The transformer secondary shall be grounded on the boat.

10.20.6 Single-Phase 120-Volt Primary and Secondary Polarization Transformer System with Shore-Grounded Neutral and GFCI Protection of Transformer Primary.

10.20.6.1 The system specified in 10.20.6 shall be permitted to be used with any metallic or nonmetallic hull boat.

10.20.6.2 The system shall be wired in accordance with the basic circuit shown in Figure 10.7.3(g).

10.20.6.3 The metallic shell of the shore power inlet shall be insulated from contact with any boat ground.

10.20.6.4 The transformer secondary shall be grounded on the boat.

10.20.7 Single-Phase Isolation Transformer with 240-Volt Input and 120/240-Volt Secondary with GFCI Protection of Transformer Primary.

10.20.7.1 The system specified in 10.20.7 shall be permitted to be used with any metallic or nonmetallic hull boat.

10.20.7.2 The system shall be wired in accordance with the basic circuit shown in Figure 10.7.3(h).

10.20.7.3 The metallic shell of the shore power inlet shall be insulated from contact with any boat ground.

10.20.7.4 The central leg of the transformer secondary shall be grounded on the boat, establishing a new neutral for the boat system.

10.20.8 Single-Phase Polarization Transformer with 240-Volt Input and 120/240-Volt Secondary and Shore Grounding Conductor Protection of Transformer Core.

10.20.8.1 The system specified in 10.20.8 shall be permitted to be used on any nonmetallic hull boat with underwater hardware of metal alloys that are at least as galvanically noble as manganese bronze.

10.20.8.2 The system specified in 10.20.8 shall be permitted to be used with metal hull boats if protection against galvanic corrosion is provided by means of a cathodic protection system or a galvanic isolator.

10.20.8.3 The system shall be wired in accordance with the basic circuit shown in Figure 10.7.3(i).

10.20.8.4 The center leg of the transformer secondary shall be grounded on the boat, establishing a new neutral for the boat system.

Chapter 11 Lightning Protection

11.1 General. Lightning protection systems shall comply with ABYC E-4, *Lightning Protection.*

Chapter 12 Fire and Carbon Monoxide Protection Equipment

12.1 Fire Suppression Equipment.

12.1.1 General Requirements.

12.1.1.1 All motor craft shall be equipped with fire-fighting equipment as required by this chapter.

12.1.1.2* All boats with an enclosed machinery space(s) shall have provision for discharging extinguishing agent directly into the space immediately surrounding the engine without opening the primary access by one of the following means:

(1) A fixed system
(2) Portable clean agent or CO_2 extinguisher used in conjunction with a discharge port into the machinery space

12.1.1.3 The net volume of a protected space, for the purpose of sizing extinguishing equipment, shall be at least the gross compartment volume minus the volume of permanently installed tankage.

12.1.1.4* A permanently affixed label shall be installed in each machinery compartment that indicates the gross volume of the compartment, the volume of permanently installed tankage, and the net compartment volume.

12.1.2 Portable Fire-Extinguishing Equipment.

12.1.2.1* All boats that are less than 65 ft (20 m) in length shall be equipped with portable fire extinguishers in accordance with Table 12.1.2.1.

12.1.2.2 All boats that are equal to or greater than 65 ft (20 m) in length shall be equipped with portable fire extinguishers in accordance with Table 12.1.2.2.

12.1.2.3* Portable fire extinguishers, other than those addressed in 12.1.2.6, shall meet the requirements of, and be inspected and maintained in accordance with, NFPA 10, *Standard for Portable Fire Extinguishers.*

Copyright National Fire Protection Association
Provided by IHS under license with NFPA
No reproduction or networking permitted without license from IHS
Not for Resale

Table 12.1.2.1 Number and Distribution of Fire Extinguishers [Boats up to but not including 65 ft (20 m) in length]

Type of Boat	No. of Extinguishers	Minimum ANSI/UL Rating	Minimum USCG Classification	Location
Open boats under 16 ft (5 m) with fiberglass or metal hulls and a light load of flammable Class A materials	1	5 B:C	B-I	Steering position
Open boats under 16 ft (5 m)	1	1A:10B:C	B-I	Steering position
Boats 16 ft (5 m) to, but not including, 26 ft (8 m)	2	1A:10B:C	B-I	Steering position and galley, when onboard, or cockpit
Open boats 16 ft (5 m) to, but not including, 26 ft (8 m)	2	1A:10B:C	B-I	Steering position and galley or cockpit
Boats 26 ft (8 m) to, but not including, 40 ft (12 m)	3	1A:10B:C	B-I	Outside engine compartment, steering position, and near galley or passenger cockpit
Boats 40 ft (12 m) to, but not including, 65 ft (20 m)	4	1A:10B:C	B-I	Outside engine compartment, steering position, crew quarters, and galley, when onboard, or cockpit

Notes:
1. For enclosed machinery spaces protected by a portable fire extinguisher, see 12.1.1.2.
2. Extinguishers intended only for machinery space protection are not required to have a Class A rating.

Table 12.1.2.2 Number and Distribution of Fire Extinguishers [Boats equal to and greater than 65 ft (20 m) in length]

Gross Tonnage	No. of Extinguishers	Minimum ANSI/UL Rating	Minimum USCG Classification	Location
Under 50	1*	4A:60B:C	B-II	Outside machinery space
	1	4A:60B:C	B-II	Helmsman's position
	3	1A:10B:C	B-I	Galley, crew quarters, and cabin
50 to less than 100	1*	4A:60B:C	B-II	Outside machinery space
	2	4A:60B:C	B-II	Helmsman's position and galley
	2	1A:10B:C	B-I	Crew quarters and cabin
100 to less than 300	1*	4A:60B:C	B-II	Outside machinery space
	3	4A:60B:C	B-II	Helmsman's position, galley, and crew quarters
	1	1A:10B:C	B-I	Cabin

* If the total horsepower exceeds 1000 bhp, an additional Type B-II portable fire extinguisher is required for each additional 1000 bhp or fraction thereof.

Copyright National Fire Protection Association
Provided by IHS under license with NFPA
No reproduction or networking permitted without license from IHS
Not for Resale

12.1.2.4 Portable fire extinguishers, other than those addressed in 12.1.2.6, shall be U.S. Coast Guard-approved.

12.1.2.5 All required portable fire extinguishers located in accommodation spaces shall have Class A capability.

12.1.2.6 A bucket with attached lanyard shall be considered a Class A rated portable fire extinguisher on boats under 26 ft (8 m) in length that do not have enclosed accommodation spaces or enclosed galleys.

12.1.2.7 It shall not be necessary to travel more than half the length of the vessel or 33 ft (10 m), whichever is less, to reach an extinguisher.

12.1.2.8* Enclosed Machinery Spaces Protected by a Portable Extinguisher.

12.1.2.8.1 Enclosed machinery spaces protected by a portable extinguisher shall be provided with a readily accessible port that is sized to accept the extinguisher nozzle and marked as to its function.

12.1.2.8.2 The port required by 12.1.2.8.1 shall be located so that the extinguisher can remain upright during discharge unless the extinguisher is equipped with a discharge hose.

12.1.2.8.3 Where portable equipment is provided for enclosed machinery space protection, the size and type shall be as specified in Table 12.1.2.8.3.

Table 12.1.2.8.3 Minimum Clean Agent or CO_2 Portable Extinguisher Sizes for Flooding an Enclosed Machinery Space

	Minimum Extinguisher Size		Maximum Compartment Volume	
Agent	lb	kg	ft^3	m^3
CO_2	5	2.3	66	2
CO_2	10	4.5	133	4
CO_2	15	7	200	6
CO_2	20	9	266	7.5
Halogenated agent	2.5	1	108	3
Halogenated agent	3	1.4	130	3.7
Halogenated agent	4	2	174	5
Halogenated agent	5	2.3	217	6
Halogenated agent	9	4	391	11
Halogenated agent	13	6	565	16
HFC-227ea	5.75	2.5	125	3.5
HFC-227ea	10.75	5	250	7.1

12.1.2.8.4 If an extinguisher is portable and readily removable from its fixed mounting, it shall be permitted to be credited as one of the extinguishers required in Table 12.1.2.1 or Table 12.1.2.2.

12.1.2.9 Installation of Portable Extinguishers.

12.1.2.9.1 Portable fire extinguishers shall be located near the means of egress and be readily accessible to the compartment that they are intended to serve.

12.1.2.9.2 Extinguishers shall be mounted with the marine bracket specified on the extinguisher label.

12.1.2.9.3 At least one extinguisher shall be located at each occupied level.

12.1.3* Fixed Fire Protection Systems.

12.1.3.1 Systems shall be manually operated, automatically operated, or both.

12.1.3.2 Carbon dioxide, Halon 1211, and HCFC-124 systems that are installed to protect accommodation compartments or to protect normally occupied enclosed machinery spaces shall be equipped with a predischarge alarm.

12.1.3.3 Connected Spaces.

12.1.3.3.1 If spaces are connected as determined by 4.4.1(5), such spaces shall be considered as a single space when determining the required capacity of the system.

12.1.3.3.2 The actuation of the system shall be such that all the connecting spaces are flooded.

12.1.3.3.3 If multiple units are used to provide the required capacity for connecting spaces, they shall discharge simultaneously.

12.1.3.4* Manual or manual/automatic fixed systems shall comply with the following criteria:

(1) They shall meet the requirements of the manufacturer's instructions.
(2) They shall meet the requirements of NFPA 12, *Standard on Carbon Dioxide Extinguishing Systems*; NFPA 12A, *Standard on Halon 1301 Fire Extinguishing Systems*; or NFPA 2001, *Standard on Clean Agent Fire Extinguishing Systems*, as appropriate.
(3) They shall be U.S. Coast Guard-approved or listed to the applicable ANSI/UL marine standard.

12.1.3.5 The system shall incorporate a visible or audible means outside of the protected space to indicate that the system has discharged.

12.1.3.6 Installation of Fixed Systems.

12.1.3.6.1 Extinguishing agent cylinders shall be mounted a minimum of 2 in. (5 cm) above moist or wet surfaces to reduce the danger of corrosion.

12.1.3.6.2* Manual controls shall be located to be readily accessible from outside the spaces served by the systems.

12.1.3.6.3 Systems shall be designed for one of the following modes of application:

(1) An independent system installed to cover one of various unconnected protected spaces
(2) A single system of sufficient capacity to flood all protected spaces simultaneously
(3) A single system of sufficient capacity for the largest protected space, distributed to the selected space by valves at the controls

12.2 Carbon Monoxide Detection. Carbon monoxide detection shall be provided in accordance with ABYC A-24, *Carbon Monoxide Detection Systems*.

12.3 Smoke Detection. All vessels 26 ft (8 m) or more in length with accommodation spaces intended for sleeping shall be equipped with a single station smoke alarm that is listed to UL 217, *Standard for Single and Multiple Station Smoke Alarms*, for recreational vehicles and is installed and maintained according to the device manufacturer's instructions.

Copyright National Fire Protection Association
Provided by IHS under license with NFPA
No reproduction or networking permitted without license from IHS
Not for Resale

Annex A Explanatory Material

Annex A is not a part of the requirements of this NFPA document but is included for informational purposes only. This annex contains explanatory material, numbered to correspond with the applicable text paragraphs.

A.1.3.3 For additional information on carbon monoxide, see ABYC TH-22, *Educational Information about Carbon Monoxide*, and ABYC TH-23, *Design, Construction, and Testing of Boats in Consideration of Carbon Monoxide*.

A.1.6 For additional conversion information, see ASTM SI 10, *Standard for Use of the International System of Units (SI): The Modern Metric System*.

A.3.2.1 Approved. The National Fire Protection Association does not approve, inspect, or certify any installations, procedures, equipment, or materials; nor does it approve or evaluate testing laboratories. In determining the acceptability of installations, procedures, equipment, or materials, the authority having jurisdiction may base acceptance on compliance with NFPA or other appropriate standards. In the absence of such standards, said authority may require evidence of proper installation, procedure, or use. The authority having jurisdiction may also refer to the listings or labeling practices of an organization that is concerned with product evaluations and is thus in a position to determine compliance with appropriate standards for the current production of listed items.

A.3.2.2 Authority Having Jurisdiction (AHJ). The phrase "authority having jurisdiction," or its acronym AHJ, is used in NFPA documents in a broad manner, since jurisdictions and approval agencies vary, as do their responsibilities. Where public safety is primary, the authority having jurisdiction may be a federal, state, local, or other regional department or individual such as a fire chief; fire marshal; chief of a fire prevention bureau, labor department, or health department; building official; electrical inspector; or others having statutory authority. For insurance purposes, an insurance inspection department, rating bureau, or other insurance company representative may be the authority having jurisdiction. In many circumstances, the property owner or his or her designated agent assumes the role of the authority having jurisdiction; at government installations, the commanding officer or departmental official may be the authority having jurisdiction.

A.3.2.4 Listed. The means for identifying listed equipment may vary for each organization concerned with product evaluation; some organizations do not recognize equipment as listed unless it is also labeled. The authority having jurisdiction should utilize the system employed by the listing organization to identify a listed product.

A.3.3.8 Clean Agent. Although commonly referred to as a clean agent in the marine industry, for the purposes of NFPA standards, CO_2 is not considered a clean agent.

A.3.3.9 Compressed Natural Gas (CNG). Mixtures of hydrocarbon gases and vapors, consisting principally of methane in gaseous form that has been compressed for use as a fuel.

A.3.3.11 Engine Exhaust System. This system includes related accessories that can be metallic or nonmetallic, such as pipes, mufflers, silencers, turbochargers, spark arresters, and all necessary connecting and supporting fittings. Wet exhaust systems are provided with water injection into the exhaust gas stream; dry exhaust systems do not have this provision.

A.3.3.15 Galvanically Compatible Metals. See Table A.3.3.15.

Table A.3.3.15 Galvanically Compatible Metals

Corroded End (anodic, or least noble)
Magnesium
Zinc
Aluminum
Cadmium
Steel or iron
Cast iron
Chromium-iron (active)
Lead-tin solders
Lead
Tin
Nickel (active)
Brasses*
Copper*
Bronzes*
Copper-nickel alloys*
Nickel-copper alloys
Silver solder
Nickel (passive)
Chromium-iron (passive)
Silver
Graphite
Gold
Platinum
Protected End (cathodic, or most noble)

* These metals and alloys are considered the best to use in combination for marine application.

A.3.3.22 Halocarbon Agent. Examples of halocarbon agents are hydrochlorofluorocarbons (HCFCs), hydrofluorocarbons (HFCs), perfluorocarbons (PFCs or FCs), and fluoroiodocarbons (FICs). See NFPA 2001, *Standard on Clean Agent Fire Extinguishing Systems*, for more information.

A.3.3.23 Halogenated Agent. Halon 1211 and Halon 1301 are included in the Montreal Protocol on Substances that Deplete the Ozone Layer, signed September 16, 1987. In compliance with national regulations, production of halons ceased on January 1, 1994.

A.3.3.24 Ignition Protection. It is not intended that such devices be "explosionproof" as the term is defined in NFPA 70, *National Electrical Code*, where it pertains to shore systems, or 46 CFR 110.15-65(e) of Coast Guard 259, Subchapter J, "Electrical Engineering." It is intended that the protection provided generally be equivalent to that of wiring permitted by this standard wherein a definite short or break is necessary to produce an open spark.

Devices that are explosionproof are considered to be provided with ignition protection where installed with the appropriate fittings to maintain their explosionproof integrity.

It is not intended that such devices be "intrinsically safe" in accordance with NFPA 70, *National Electrical Code*, Article 500, or 46 CFR 111.80-5(a)(3) of Coast Guard 259, Subchapter J, "Electrical Engineering."

Devices that are intrinsically safe are considered to be provided with ignition protection.

A.3.3.27 Liquefied Petroleum Gas (LPG). A liquefied petroleum gas is any material having a vapor pressure not exceeding that allowed for commercial propane and is composed

Copyright National Fire Protection Association
Provided by IHS under license with NFPA
No reproduction or networking permitted without license from IHS
Not for Resale

predominantly of the following hydrocarbons, either by themselves or as mixtures: propane, propylene, butane (normal butane or isobutane), and butylenes. See NFPA 58, *Liquefied Petroleum Gas Code*.

A.3.3.32 Panelboard. Panelboards can include devices such as circuit breakers, fuses, switches, instruments, and indicators. Panelboards are intended to be installed in enclosures and are accessible from the front or rear.

A.3.3.33 Permanently Installed. Examples of tools necessary would be screwdrivers and wrenches.

A.3.3.36 Polarized System (ac). This standard assumes the shore power source is wired in accordance with NFPA 70, *National Electrical Code*, Article 555.

A.3.3.41 Sheath. Examples of sheath material are woven sleeving, molded rubber, molded plastic, loom, and flexible tubing.

A.3.3.45 Ventilation. Ventilation can be achieved by introduction of fresh air to dilute contaminated air or by local exhaust of contaminated air.

A.3.3.47 Weatherproof. For the purpose of this standard, where applied to marine use, *weatherproof* implies resistance to rain, spray, and splash.

A.4.1.2 The use of marine fire-retardant paints and varnishes is recommended for engine, fuel tank, and galley compartments.

A.4.3 Ventilation cannot be relied upon to remove all flammable vapors that can result from fuel system failures (leakage). Therefore, compliance with the ventilation requirements of this standard should be considered valid only where it has been determined that the entire fuel system complies with the requirements of Chapter 7.

A.4.3.2 The warning label should contain the following informational elements:

WARNING: Fuel vapors are a fire and explosion hazard.
To avoid injury or death, do not store fuel or flammable liquids here.
No ventilation has been provided.

The same considerations should apply to the storage of portable gasoline powered equipment, as ventilation or ignition protection of electrical devices has not been provided for explosive vapors.

A.4.3.4 Exhausts and intakes might not function as intended when wind direction varies.

A.4.3.10 See Table A.4.3.10.

A.4.3.11 See Table A.4.3.10.

A.4.5.2.2 See SAE J1171, *Recommended Practice for External Ignition Protection of Marine Electrical Devices*.

Table A.4.3.10 Standard Duct Sizes

in.^{2}	cm^2	in. dia.	cm dia.
4.91	31.7	2½	6.4
7.07	45.6	3	7.6
9.62	62.1	3½	9
12.57	81.1	4	10
19.63	126.6	5	13

A.4.6.3 These drawings only provide examples of the location and orientation necessary to prevent entry of fuel vapors. They do not supersede the requirements of 7.5.2 addressing the escape of liquid and vapor overflow. See Figure A.4.6.3.

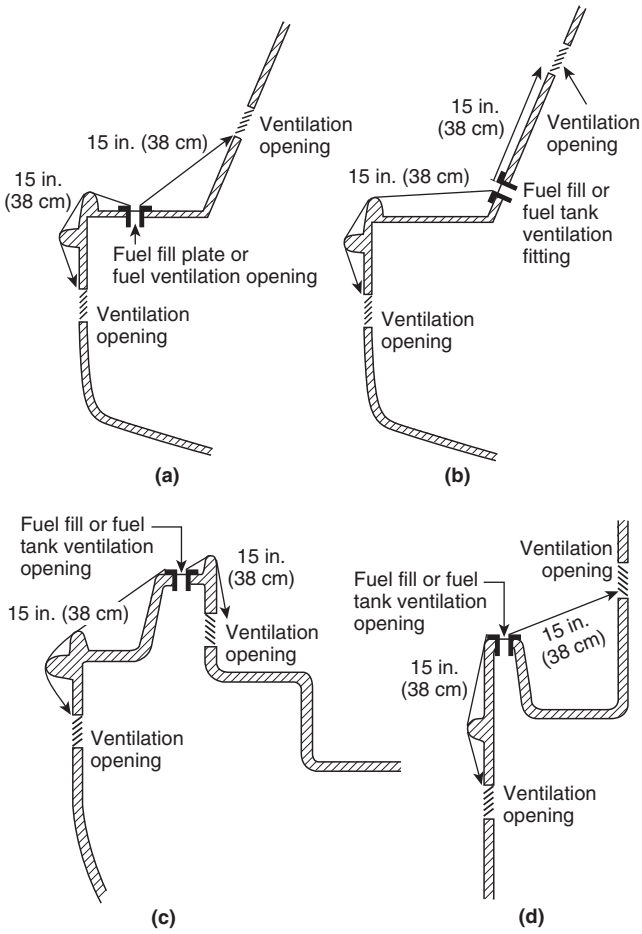

FIGURE A.4.6.3 Examples of How to Measure Ventilation Opening Separation from Fuel Fill or Vent Fitting.

A.5.3 See SAE J1223, *Recommended Practice for Marine Carburetors and Fuel Injection Throttle Bodies*.

A.5.3.3 See SAE J1223, *Recommended Practice for Marine Carburetors and Fuel Injection Throttle Bodies*.

A.5.8 See SAE J1191, *Recommended Practice for High Tension Cable Assemblies—Marine*.

A.5.9 For information on ignition distributors, see SAE J1294, *Recommended Practice for Ignition Distributors—Marine*.

A.7.2.2.5.3 Brackets will reduce the chance of crevice and pitting corrosion of the tank surfaces by ensuring air circulation to the tank surfaces.

A.7.5.1.7 Nonmetallic fuel system components degrade when exposed to ultraviolet (UV) radiation (i.e., sunlight). Such components that will be exposed to UV radiation should be chosen for their UV resistance and should be inspected periodically to determine suitability for continued service.

--`,,,,`-`-`,,`,,`,`,,`---

Copyright National Fire Protection Association
Provided by IHS under license with NFPA
No reproduction or networking permitted without license from IHS
Not for Resale

A.7.5.2.4 An inverted "U" bend in the fuel tank vent pipe is one way to minimize the intake of water.

A.7.5.2.10 The purpose of this requirement is to preserve the fuel tightness at either end of the flexible section.

A.7.5.3 If fuel tanks are located in a compartment other than the engine compartment, or if the engine and fuel tanks are separated by a distance of more than 12 ft (3.7 m), an approved manual stop valve should be installed at the engine end of the fuel line to stop fuel flow when the engine is being serviced.

A.7.5.3.1 The purpose of the 12 in. (30 cm) requirement is to minimize the amount of pressurized piping when the pump is operating.

A.7.5.3.5(5) "Readily accessible for operation from outside the compartment" includes a shutoff valve installed at the tank close to, and directly below, an access port through which the valve can be operated.

A.7.5.3.6.1 "Readily accessible" includes a shutoff valve that can be operated through an access port.

A.8.1 Open-flame devices are subject to careless, unskilled, or ignorant operation more than any other boat equipment involving fire risk. It is, therefore, imperative that such items be selected and installed with the aim of minimizing personal and physical hazards.

A.8.1.3 The calculation method for the minimum effective area of fixed ventilation for accommodation spaces is as follows:

$$V > 2200U + 440F + 650P$$

where:
V = effective area in in.^{2} (minimum 4000 mm^2)
U = nominal heat input of nonflued appliances (cooker, stove, lamps) in kW
F = nominal input of open, flued appliances (refrigerator, water heater, cabin heater) in kW
P = number of persons for which the cabin is designed

A.8.4.2.8 Examples of fuel system markings are as follows:
Stove Fuel — Diesel
Stove Fuel — Alcohol

A.8.4.6 The means to prevent cookware from sliding off a non-gimbaled stove can be attached to the adjacent counter, back splash, or other structure, provided the intent of this requirement is met.

A.8.5 In the interest of safety, it is important that the properties of liquefied petroleum gases be understood and that safe practices for their use be followed. LPGs liquefy under moderate pressure; they readily vaporize to the gaseous state on relief of the pressure. Such characteristics prove to be an advantage when these gases are used. For convenience, they are shipped and stored under pressure as liquids. In the gaseous state, propane poses a hazard comparable to any flammable natural or manufactured gas, except that propane vapors are heavier than air. Although vapors tend to sink to the bottom of an enclosed compartment into which such gases are released, they diffuse throughout the compartment and cannot be dispelled readily by overhead ventilation. Safety demands that the escape of any propane should be prevented because when mixed with air in certain proportions propane will explode if ignited.

It also is important that the properties of natural gas be known and understood. Natural gas is a colorless, tasteless, and nontoxic flammable gas. It is a light gas, weighing about one-half as much as air, and it tends to rise and diffuse rapidly in air when it escapes from those systems covered by this standard. Natural gas is nontoxic but can cause asphyxiation when it displaces the normal 21 percent oxygen in air in a confined area without adequate ventilation. Its composition consists primarily of methane and varying amounts of ethane, propane, butane, and higher hydrocarbons. Some constituents of natural gas can be corrosive to carbon steel.

A.8.5.6 For information on external ignition protection of marine electrical devices, see SAE J1171, *Recommended Practice for External Ignition Protection of Marine Electrical Devices*.

A.8.5.12.4 The purpose of the pressure gauge is to provide a convenient and quick means of testing the system for leakage from the container valve to, and including, the appliance valves. It is recommended that testing be done at least every two weeks and after any emergency. No leakage, however minor, should be permitted.

A.8.5.15.6 Avoid soaps containing ammonia, which cause seasonal cracking at some metal fittings.

A.9.2.2 See Figure A.9.2.2(a) and Figure A.9.2.2(b).

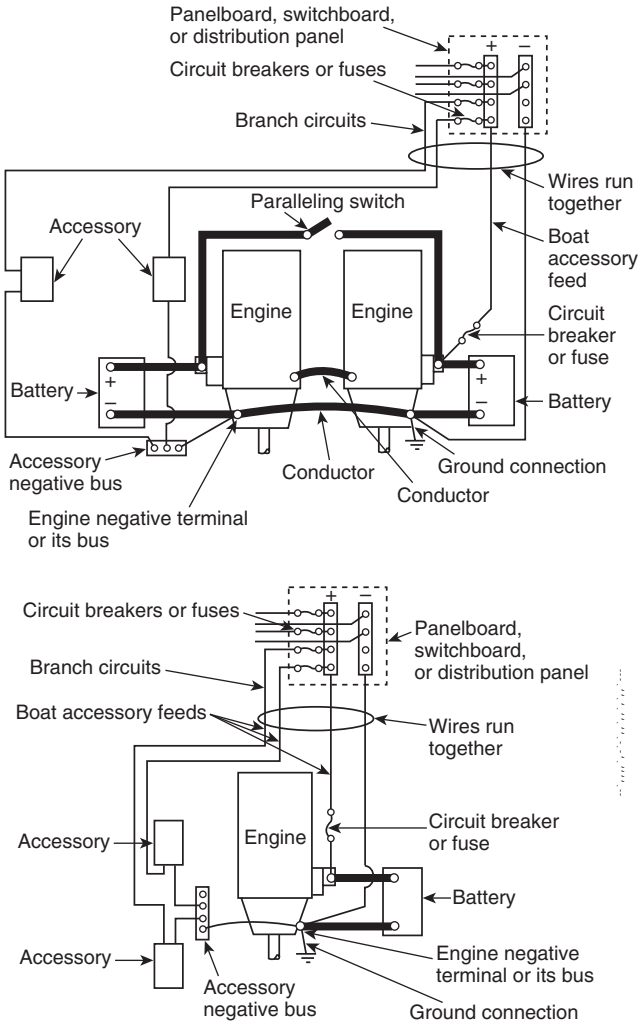

FIGURE A.9.2.2(a) Typical Inboard dc Grounding Systems.

Copyright National Fire Protection Association
Provided by IHS under license with NFPA
No reproduction or networking permitted without license from IHS
Not for Resale

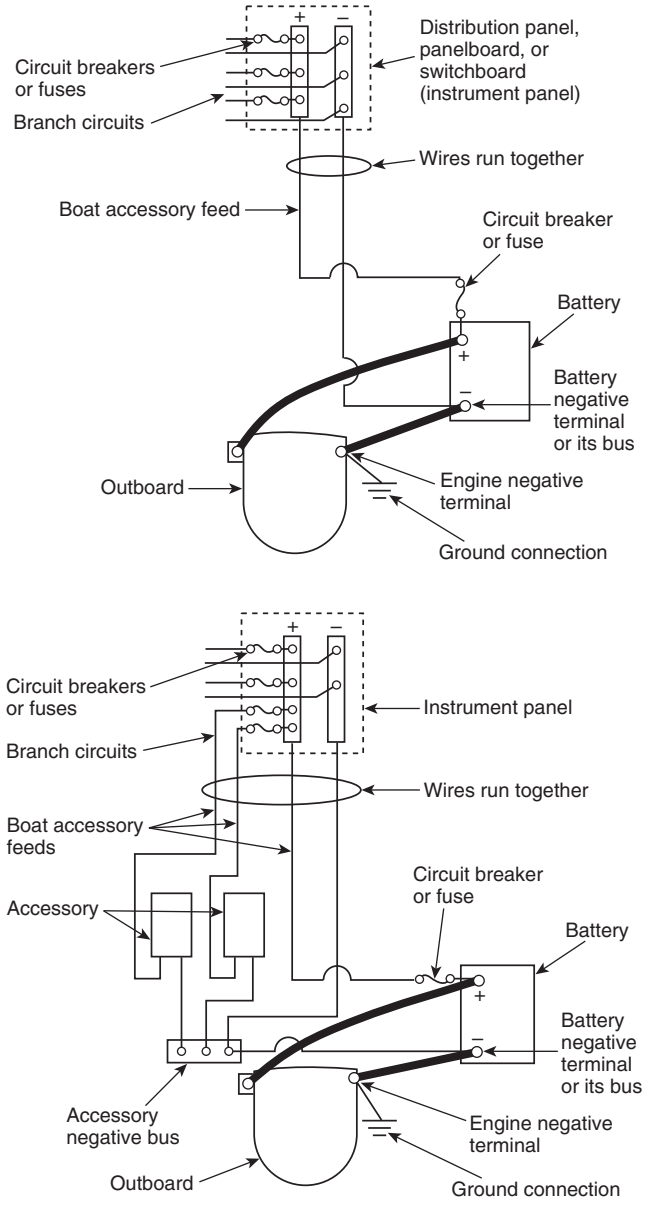

FIGURE A.9.2.2(b) Typical Outboard dc Grounding Systems.

A.9.3.3 These provisions also apply to installations of sealed batteries.

A.9.3.5 For information on securing batteries, see 33 CFR 183.

A.9.3.9 For information on shielding with dielectric material, see 33 CFR 183.

A.9.6.2 An engine is an example of electrical equipment that must be marked.

A.9.8.2 See Figure A.9.8.2(a) through Figure A.9.8.2(g).

A.9.9.2 See Figure A.9.9.2.

A.9.9.3.1 Sealed-valve regulator (SVR) batteries (also known as gel cells) require thermal-sensing, voltage-regulating charging devices. This applies to both electrically powered and engine-driven charging devices.

A.9.9.4.1 The requirement of 9.9.4.1 might necessitate the use of thermally responsive protection devices on the equipment or system if the motor is not capable of operating continuously at maximum possible loading.

A.9.9.4.2 If it is necessary to test as installed in order to ensure compliance with the locked rotor requirement, then voltage drop due to wire size and delay characteristics of the overcurrent protection device should be adjusted to protect the motor.

A.9.9.7 See Figure A.9.9.7.

A.9.9.8(4) For information on marine circuit breakers, see SAE J1428, *Recommended Practice for Marine Circuit Breakers*.

A.9.9.8(5) For information on external ignition protection of marine electrical devices, see SAE J1171, *Recommended Practice for External Ignition Protection of Marine Electrical Devices*.

A.9.9.9(3) For information on external ignition protection of marine electrical devices, see SAE J1171, *Recommended Practice for External Ignition Protection of Marine Electrical Devices*.

A.9.10.5 Consideration should be given to the selection of special switches for use with high-current inductive loads.

A.9.12.2 For information on marine engine wiring, see SAE J378, *Recommended Practice for Marine Engine Wiring*.

A.9.13.1 Current-carrying conductors should be routed as high as practicable above the bilge water level and other areas where water can accumulate.

A.9.13.2 Conductors should be routed as far away as practicable from exhaust pipes and other heat sources.

A.9.13.3.2 Battery cables should be routed to minimize contact with nonmetallic fuel system components.

A.9.14.7 If a connection is soldered, the flexibility of the wire is affected and can be subject to failure from movement. If a crimped connection is soldered, it can reduce the mechanical strength of the joint.

A.10.1 This standard recognizes that shore power voltage varies in different geographic areas. The selection of motor-operated equipment should consider this variation.

A.10.2.3.2 Examples of locations to which the neutral could be grounded are at the onboard generator, at an inverter, at the secondary of an isolation or polarization transformer, or through the shore power connection.

A.10.6.2 See A.9.8.2.

A.10.6.2(4) Seepage of not more than ¼ fl oz (7.4 ml) per hour is permitted below the water-resistant height. This includes bulkhead fastenings and space around hatches, doors, access panels, and items passing through the bulkhead.

Openings above the water-resistant height cannot have more than ¼ in. (6.4 mm) annular space around items passing through the openings.

A.10.7.1 Reverse-polarity indicating devices respond to the reversal of an ungrounded conductor and the grounded (white) conductor only when there is continuity of the grounding (green, or green with yellow stripe) conductor to shore.

Reverse-polarity indicating devices might not respond to reversals of an ungrounded conductor and the grounding (green, or green with yellow stripe) conductor, the grounded (white) conductor and the grounding (green, or green with yellow stripe) conductor, or three-phase conductors.

Copyright National Fire Protection Association
Provided by IHS under license with NFPA
No reproduction or networking permitted without license from IHS
Not for Resale

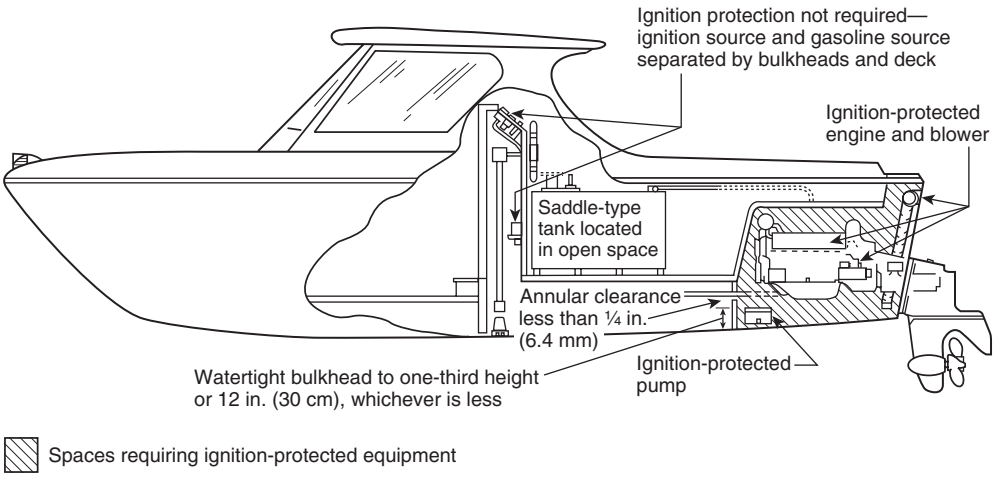

FIGURE A.9.8.2(a) Location of Ignition-Protected Equipment on Gasoline-Powered Inboard Engine Boats with Bulkhead and Deck Separations.

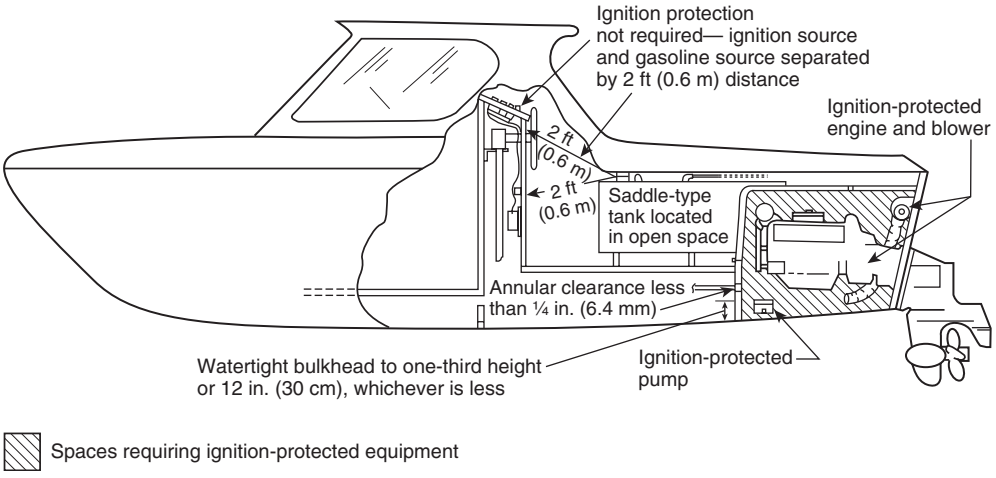

FIGURE A.9.8.2(b) Location of Ignition-Protected Equipment on Gasoline-Powered Inboard Engine Boats with Ignition Source and Gasoline Fuel Source Separated by 2 ft (0.6 m) Distance.

A.10.8.2(4) For information on marine circuit breakers, see SAE J1428, *Recommended Practice for Marine Circuit Breakers*.

A.10.8.2(5) For information on external ignition protection of marine electrical devices, see SAE J1171, *Recommended Practice for External Ignition Protection of Marine Electrical Devices*.

A.10.8.3(3) For information on external ignition protection of marine electrical devices, see SAE J1171, *Recommended Practice for External Ignition Protection of Marine Electrical Devices*.

A.10.9.2.1 Overcurrent protection should be located as close as practical to the source of power.

A.10.9.3 Overcurrent protection should be located as close as practical to the source of power.

A.10.11.4 This GFP breaker provides ground-fault protection for the primary winding of the transformer only.

A.10.14.4 If a connection is soldered, the flexibility of the wire is affected and can be subject to failure from movement. If a crimped connection is soldered, it can reduce the mechanical strength of the joint.

A.10.14.9 Current-carrying conductors should be routed as high as practical above the bilge water level and other areas where water can accumulate.

A.10.14.10 Conductors should be routed as far away as practicable from exhaust pipes and other heat sources.

A.10.15.7 See NFPA 70, *National Electrical Code*, E-8.12 of ABYC E-8, *Alternating Current (AC) Electrical Systems on Boats*, and applicable UL standards, for additional information.

A.12.1.1.2 Engine room calculations and concentrations can be used for other spaces.

Copyright National Fire Protection Association
Provided by IHS under license with NFPA
No reproduction or networking permitted without license from IHS
Not for Resale

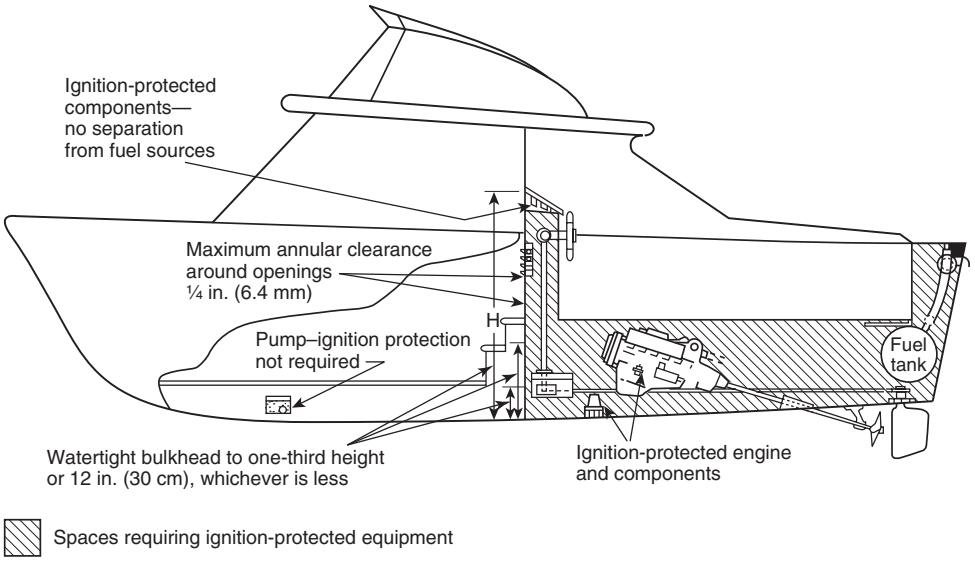

FIGURE A.9.8.2(c) Ignition Protection in Space Containing Gasoline Engine and Fuel Line Fittings.

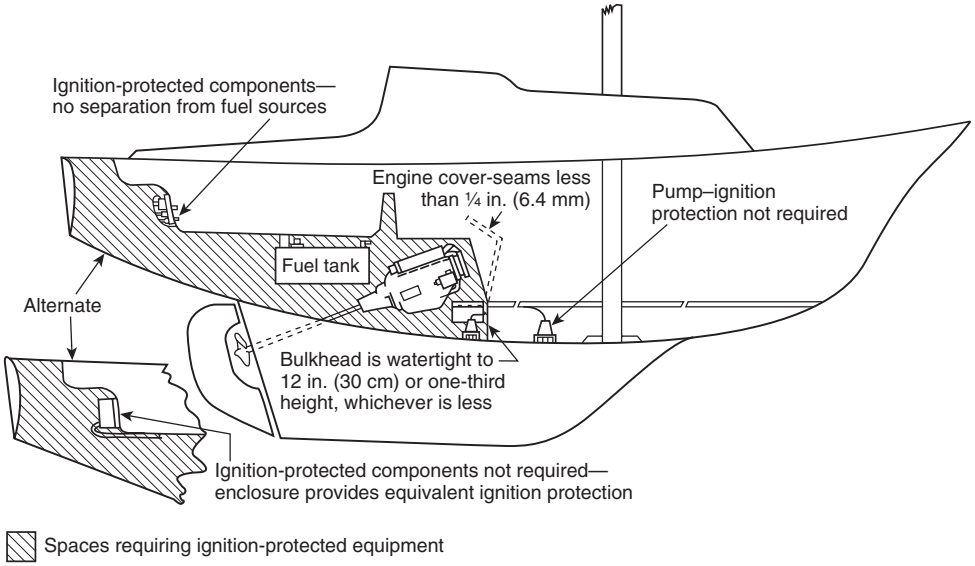

FIGURE A.9.8.2(d) Ignition Protection in Space Containing Gasoline Engine and Fuel Line Fittings on Sailboats.

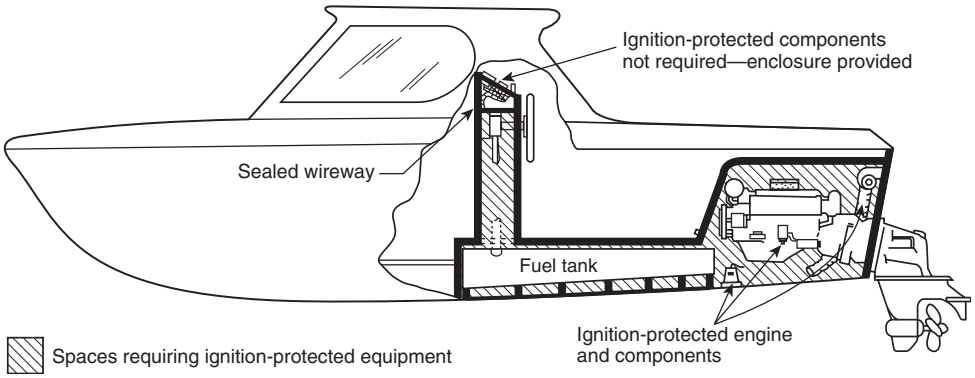

FIGURE A.9.8.2(e) Ignition Protection in Space Containing Gasoline Engine and Fuel Line Fittings.

--`,,,,`,,`-`-`,,`,,`,`,,`---
Copyright National Fire Protection Association
Provided by IHS under license with NFPA
No reproduction or networking permitted without license from IHS
Not for Resale

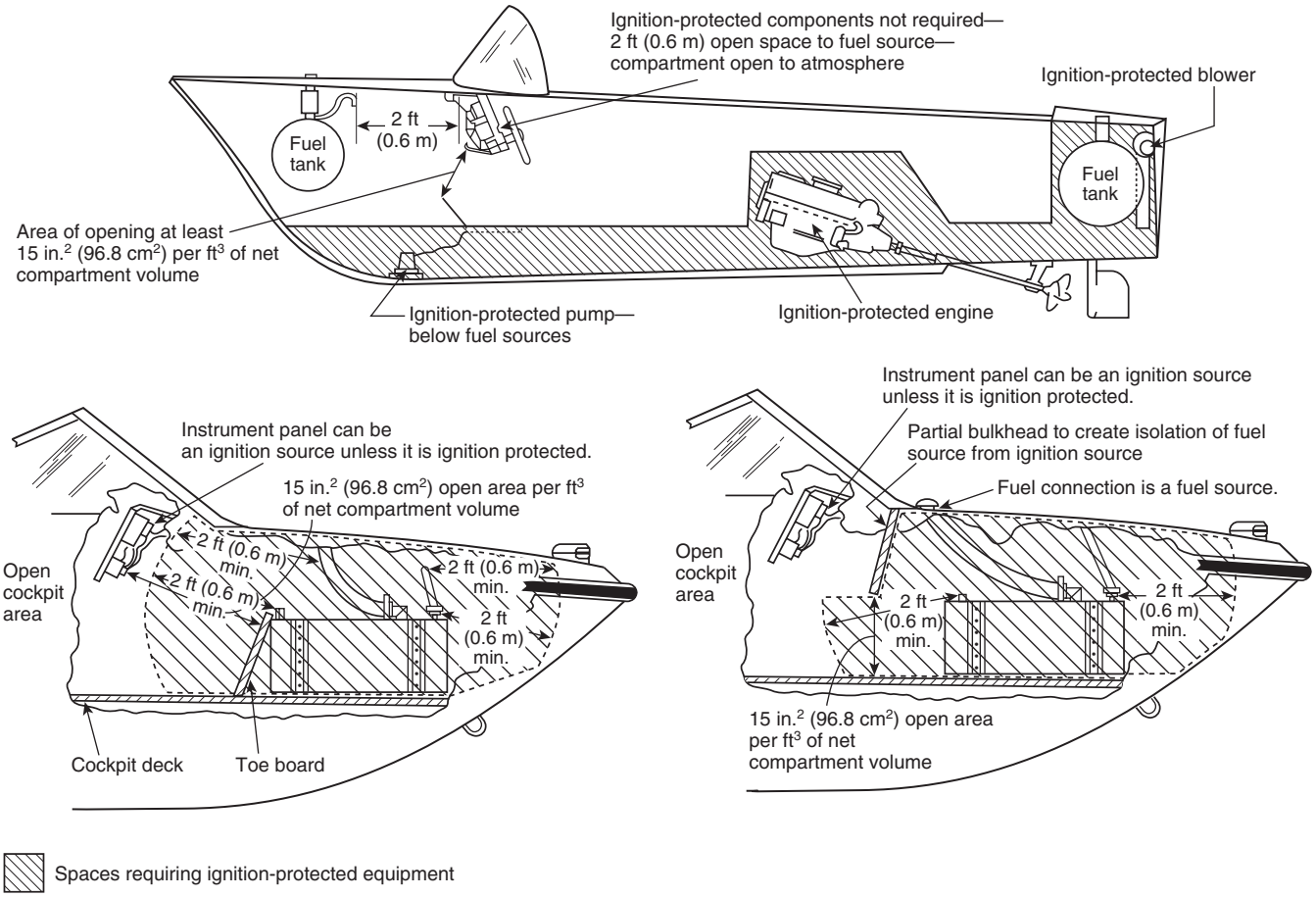

FIGURE A.9.8.2(f) Ignition Protection with No Bulkhead.

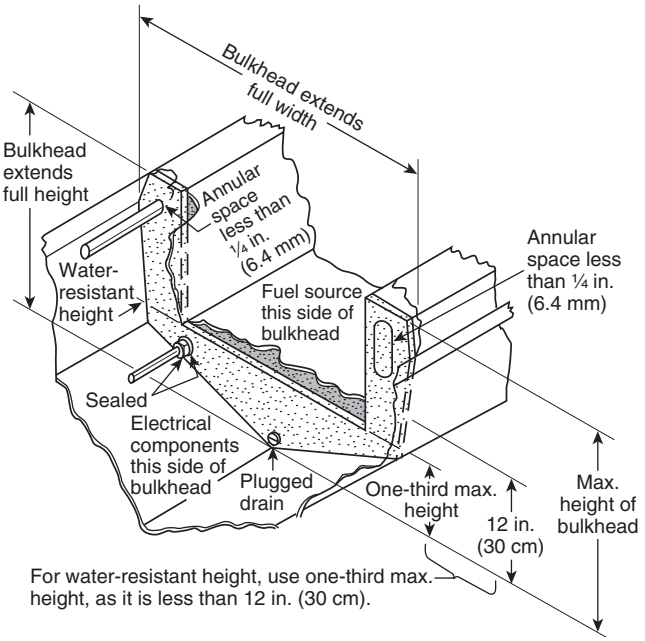

FIGURE A.9.8.2(g) Cutaway Illustration Showing Separation of Electrical Components from Gasoline Fuel Source.

A.12.1.1.4 The label should include the following statement, "Fixed fire extinguisher systems must be suitable for compartment volume of XXX ft^3. This volume is based on gross compartment volume less permanently installed tankage in this compartment determined using ABYC A-4." For boats built prior to the effective date of this standard, it might be necessary to obtain this information from the boat manufacturer or to calculate this volume accurately.

A.12.1.2.1 On boats without Class A combustibles or accommodation spaces, a USCG Type B-I extinguisher having only B:C capabilities should be used. For equivalent ratings, use Table A.12.1.2.1.

A.12.1.2.3 On boats without Class A combustibles or accommodation spaces, a USCG Type B-I extinguisher having only B:C capabilities should be used. For equivalent ratings, see Table A.12.1.2.1. *(See Annex B.)*

A.12.1.2.8 See A.12.1.1.2.

A.12.1.3 There are two basic types of clean agent fire extinguishing systems: engineered and pre-engineered.

Engineered fire-extinguishing systems consist of components designed or selected for a specific application to a specific vessel or model series. Pre-engineered fixed fire-extinguishing systems (packaged systems) consist of those designed to be installed according to pre-tested limitations.

Copyright National Fire Protection Association
Provided by IHS under license with NFPA
No reproduction or networking permitted without license from IHS
Not for Resale

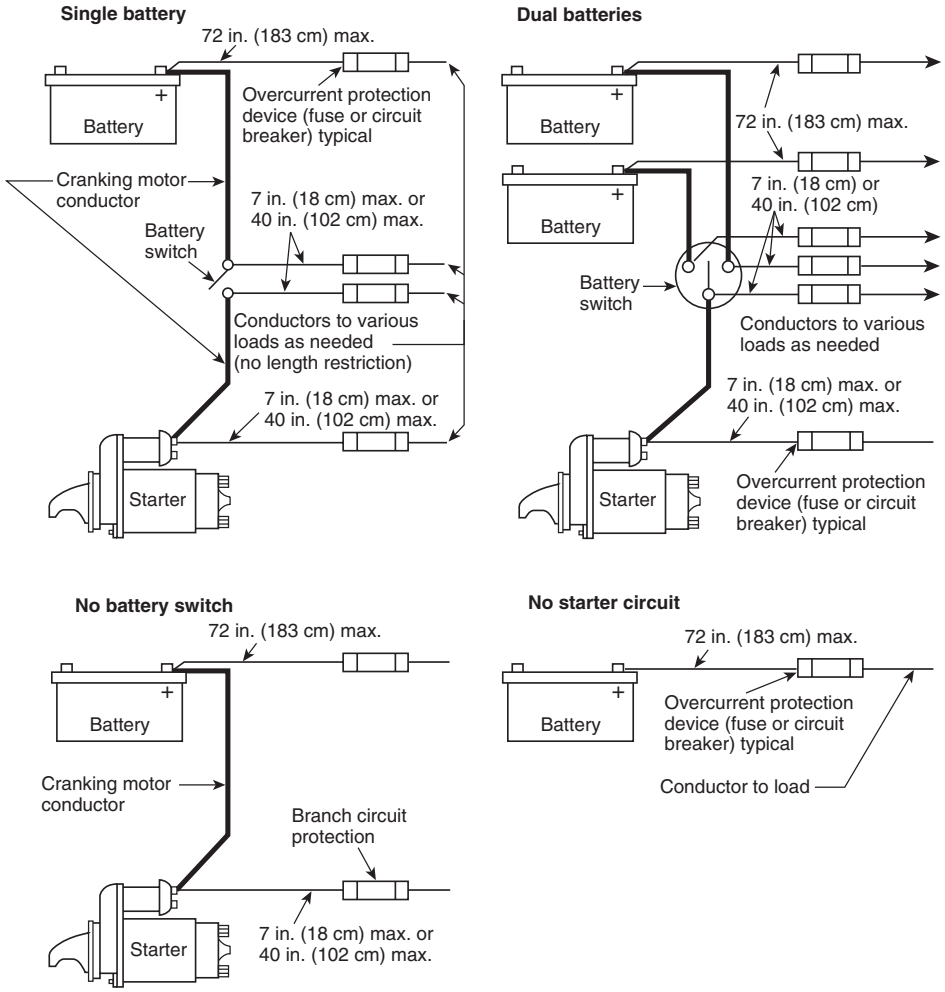

FIGURE A.9.9.2 Location of Overcurrent Protection for Conductors Served by Single or Dual Batteries or Without Battery Switch or Starter Circuit.

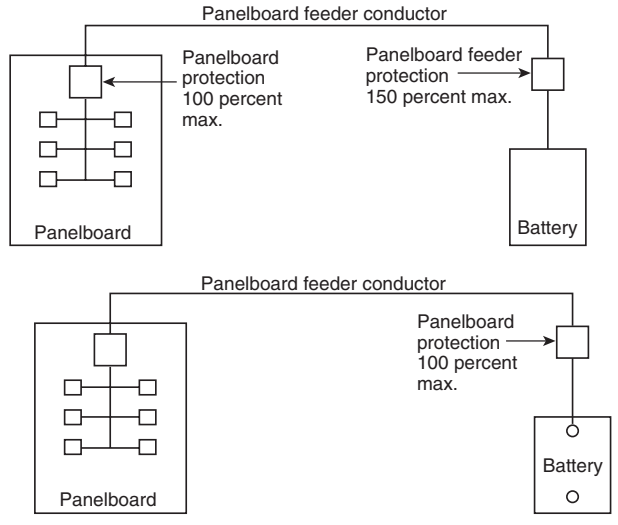

FIGURE A.9.9.7 Illustration of Overcurrent Protection for Panelboards and Panelboard Feeder Conductors.

In calculating the volumes of the space to be protected, all connecting compartments or spaces into which extinguishing vapor can migrate easily, such as bilges, tank compartments, and storage areas, should be included. For information on connecting compartments or spaces, see 4.2.1. All devices that consume air from the protected spaces should be shut down prior to or at the time of system actuation.

Engineered systems, when installed in accordance with the U.S. Coast Guard-approved installation manual, provide adequate protection for the volume specified in the approval documentation and the manual. A self-inspection form is available that should be completed by the installer or the owner and returned to the manufacturer. The manufacturer then provides a certificate, which is submitted to the authority having jurisdiction as evidence of an approved system.

Pre-engineered systems include an installation manual that also warns of their limitations. It is extremely important that these limitations, as outlined below, be observed:

(1) Independently activated multiple units should not be used to provide protection for a volume larger than the smallest unit installed. If multiple self-contained units are installed in a single compartment, it is extremely unlikely that they will function simultaneously.

--`,,,,`,-`-`,,`,,`,`,,`---
Copyright National Fire Protection Association
Provided by IHS under license with NFPA
No reproduction or networking permitted without license from IHS
Not for Resale

Table A.12.1.2.1 U.S. Coast Guard (USCG) Classification of Portable and Semiportable Fire Extinguishers

Classification		Halogenated Agent		Carbon Dioxide		Dry Chemical		HFC-227ea	
Type	Size	lb	kg	lb	kg	lb	kg	lb	kg
B	I	2.5	1.1	5	2.3	2	0.9	5.75	2.5
B	II	10	4.5	15	6.8	10	4.5	—	—
B	III	—	—	35	16	20	9.1	—	—

Table A.12.1.3.4 Recommended Weight of Carbon Dioxide and Clean Agents for Pre-Engineered Systems

Maximum Volume of Space (Net)		Carbon Dioxide[a]		Halon 1211[b]		Halon 1301[b]		HFC-227ea[c]		HCFC-124[d]	
ft^3	m^3	lb	kg	lb	kg	lb	kg	lb	kg	lb	kg
<90	<2.5	5	2.3	2.1	0.9	1.9	0.8	3.9	1.7	3.24	1.4
140	4	10	4.5	3.3	1.5	2.9	1.32	6.1	2.8	5	2.3
220	6.2	15	6.8	5.1	2.3	4.5	2	9.5	4.3	7.9	3.6
300	8.5	20	9.1	7	3.2	6.2	2.8	13	5.9	10.8	4.9
375	10.6	25	11.3	8.8	4	7.7	3.5	16.2	7.4	13.5	6.1
525	14.9	35	15.9	12.3	5.6	10.8	4.9	22.7	10.3	18.9	8.6
800	22.7	50	22.7	18.7	8.5	16.5	7.5	34.64	15.7	28.8	13.1
1200	34	75	34	28.1	12.7	24.7	11.2	52	23.6	43.2	19.6
1600	45.3	100	45.4	37.4	17	33	14.9	69.3	31.4	57.6	26.1

Warning: Discharge of these agents in a confined space can be hazardous to personnel. When the system discharges, the protected space should be evacuated immediately of all personnel.

Note: When computing the net cubic volume to be protected, see 12.1.1.3 and 12.1.1.4.

[a] From 1600 ft^3 to 4500 ft^3 (45 m^3 to 127 m^3), there should be 1 lb per 18 ft^3 (2.9 kg per m^3) of space, and above 4500 ft^3 (127 m^3) there should be 1 lb per 20 ft^3 (3.2 kg per m^3) of space.

[b] Volumes given in the table are based on a flooding factor of 5 percent at 70°F (21°C), which is 0.0234 lb/ft^3 (0.3748 kg/m^3) for Halon 1211 and 0.0206 lb/ft^3 (0.3300 kg/m^3) for Halon 1301.

[c] Volumes given in the table are based on a flooding factor of 8.7 percent at 70°F (21°C), which is 0.0433 lb/ft^3 (0.6936 kg/m^3).

[d] Volumes given in the table are based on a flooding factor of 9.0 percent at 70°F (21°C), which is 0.0360 lb/ft^3 (0.5767 kg/m^3).

(2) Units should be located with their sensor near the top of the protected space.

Toxic products are produced in a fire event, and necessary precautions — such as ventilating the space and/or the wearing of self-contained breathing apparatus — should be taken before entering the space.

A CO_2 fixed system consists of the storage container, actuation controls, pressure switch, and nozzles. All devices that consume air from the protected spaces should be shut down prior to or at the time of system actuation. Since this normally includes the main propulsion engine, it frequently is preferred that the system be actuated manually without automatic detection.

A.12.1.3.4 In the absence of a manufacturer's instruction manual, Table A.12.1.3.4 provides information that can be used to determine weight per maximum volume of space protected for carbon dioxide or clean agent. A new system should be installed and maintained in accordance with the manufacturer's instructions and should be U.S. Coast Guard-approved or listed to the applicable ANSI/UL marine standard.

A.12.1.3.6.2 Well-separated dual manual controls are recommended, whether the system is designed for manual or automatic operation.

Annex B Portable Fire Extinguishers and Fixed Systems

This annex is not a part of the requirements of this NFPA document but is included for informational purposes only.

B.1 Classification of Fires. For all practical purposes, there are four general classes of fire, as follows:

(1) Class A fires — fires in ordinary combustible materials, such as wood, cloth, paper, rubber, and many plastics
(2) Class B fires — fires in flammable liquids, oils, greases, tars, oil-base paints, lacquers, and flammable gases
(3) Class C fires — fires that involve energized electrical equipment where the electrical nonconductivity of the extinguishing media is of importance (When electrical equipment is de-energized, fire extinguishers for Class A or B fires can be used safely.)
(4) Class D fires — fires in combustible metals, such as magnesium, titanium, zirconium, sodium, lithium, and potassium

B.2 Classification of Fire Extinguishers. Based on the classification of fires described in Section B.1 and on fire extinguishing potential as determined by physical testing by organizations acceptable to the authority having jurisdiction,classifications have

--`,,,,`,-`-`,,`,,`,`,,`---

Copyright National Fire Protection Association
Provided by IHS under license with NFPA
No reproduction or networking permitted without license from IHS
Not for Resale

been established for portable fire extinguishers. The U.S. Coast Guard also classifies portable fire extinguishers based on the classification of fires found in Section B.1 but uses a different method of indicating extinguishment potential. *(See 46 CFR.)*

The relative extinguishment potential of various sizes and types of extinguishers as determined by Underwriters Laboratories Inc. is expressed by a numeral, and the class of fire for which the agent is suitable is represented by the letters in Section B.1. Size or weight alone does not necessarily indicate the effectiveness of the extinguisher, and this should be understood when choosing an extinguisher to ensure the best value and the maximum protection. Because of the regulatory responsibility of the U.S. Coast Guard in the field of boating safety, U.S. Coast Guard designations are followed in this standard. *(See Table B.2.)*

B.3 Fire Extinguisher Rating System. Although currently using a rating system based on the size and weight of the extinguishing agent, the U.S. Coast Guard also considers extinguisher performance on marine-type fires. Extinguishers not labeled with a U.S. Coast Guard approval classification should be listed and labeled by Underwriters Laboratories Inc., have a minimum rating of 5 B:C, and have a minimum capacity as specified in Table B.3. Those of inadequate performance are not classified as approved by the U.S. Coast Guard. Table B.3 provides the U.S. Coast Guard classification and relative unit size for the minimum size approved portable and semiportable fire extinguisher acceptable for use on flammable liquid fires.

B.4 Portable Fire Extinguishers and Fixed Systems — Maintenance.

B.4.1 See Annex E.

B.4.2 All fire extinguishers should be recharged after each use, even if only partly discharged.

Table B.3 U.S. Coast Guard (USCG) Classification of Fire Extinguishers

Classification		Halogenated Agent		Carbon Dioxide		Dry Chemical	
Type	Size	lb	kg	lb	kg	lb	kg
B	I	2½	1.1	5	2.3	2	0.9
B	II	10	4.5	15	6.8	10	4.5
B	III	—	—	35	16	20	9.1

B.4.3 Dry chemical fire extinguishers should be kept filled with the specified weight of chemical at all times. Cartridges, in cartridge-type extinguishers, should be reweighed annually and, if found to weigh less than the minimum weight stamped thereon, should be replaced with a full cartridge or recharged. The gauge on stored pressure units should be examined and the unit serviced if the pressure is outside the operating limits.

B.4.4 After discharge, and before recharging, the discharge hose should be cleaned of all chemicals.

B.4.5 Carbon dioxide fire extinguishers should be reweighed semiannually, and cylinders in fixed carbon dioxide systems should be reweighed at least annually but preferably every 6 months. If found to be lighter than the weight indicated on the nameplate, cylinders should be recharged.

B.4.5.1 Carbon dioxide fire extinguishers always should be recharged after each use, even if only partly discharged.

Table B.2 Fire Extinguishers

Type of Extinguisher	Fire Suitability A	B	C	Subject to Freezing	Annual Maintenance Required*	Operating Precautions
Carbon dioxide	No	Yes	Yes	No	Weigh and tag	Smothering in high concentrations. Avoid contact with discharge horn.
Dry chemical	No	Yes	Yes	No	Weigh to manufacturer's instructions; verify pressure if gauge is provided and seal integrity; tag	None
Multipurpose dry chemical A, B, C	Yes	Yes	Yes	No	Weigh to manufacturer's instructions; verify pressure if gauge is provided and seal integrity; tag	None
Halogenated agents †		Yes	Yes	No	Weigh to manufacturer's instructions; verify pressure if gauge is provided and seal integrity; tag	Avoid high concentrations

* In addition, inspect frequently to detect tampering, obstruction of discharge orifice, or other condition. *(See NFPA 10, Standard for Portable Fire Extinguishers.)*

† Certain extinguishers of this type are listed for Class A fires. Check label for suitability for Class A fires.

Copyright National Fire Protection Association
Provided by IHS under license with NFPA
No reproduction or networking permitted without license from IHS
Not for Resale

B.4.5.2 Carbon dioxide extinguishers and cylinders in fixed systems should be provided with tags indicating the date weighed, current weight, and weigher's signature.

B.4.6 Portable extinguishers should be hydrostatically tested in accordance with the requirements of NFPA 10, *Standard for Portable Fire Extinguishers*.

B.4.7 All fixed systems, if installed, should be maintained on at least an annual basis in accordance with the manufacturer's maintenance manual. It is recommended that a fixed system be maintained by a qualified fixed system service person.

B.5 Fire Extinguishers and Fixed Systems — Operations.

B.5.1 For Class A fires, such as those in bedding, cushions, acoustic materials, and wood, the extinguishing agent should be water, multipurpose dry chemical, or clean agent (if listed for Class A fires). Action should be taken to extinguish completely any burning or smoldering embers, or the smoldering material should be thrown overboard. Alcohol fuel galley fires also can be extinguished with water.

B.5.2 Carbon dioxide, clean agent, and dry chemical are the most effective means of extinguishment for Class B fires in flammable liquids such as gasoline, diesel fuel, or kerosene.

B.5.2.1 Dry chemical fire extinguishers are provided with a nozzle for distributing the dry chemical in a dense cloud from about 5 ft to 15 ft (1.5 m to 4.5 m), depending upon the capacity of the extinguisher. For open fires in flammable liquids, the discharge should be applied in a rapid, sweeping motion to the near edge of the flames at their base and continued toward the far edge. For fires caused by running or dripping fuel from leaks in fuel tanks or lines, extinguishment should begin at the lower part of the fire and work upward. Leaks should be stopped as quickly as possible. For use on obstructed fires, such as in engine rooms, the discharge should be applied near the base of the fire to be effective. Such applications are not always possible.

B.5.2.2 Carbon dioxide fire extinguishers are provided with a horn for applying the discharge close to the base of the flames. For open fires in flammable liquids, the discharge should be applied in a slow, sweeping motion to the near edge of the flames at their base and continued toward the far edge. For fires caused by running or dripping fuel from leaks in fuel tanks or lines, extinguishment should begin at the lower part of the fire and work upward. Leaks should be stopped as quickly as possible.

B.5.3 For Class C fires involving electrical equipment, circuits should be deenergized first by opening main switches, pulling shore line plugs, or other means. Dry chemical, carbon dioxide, or clean agent extinguishers should be used. Water or foam extinguishers should not be used due to the danger of electrical shock to the operator or shorting of the electrical circuits.

B.5.4 Fixed fire-extinguishing systems provide manual, automatic, or combined manual and automatic operation. The manual release should be used without waiting for the automatic release to operate if a fire occurs aboard an attended vessel. In accordance with the system safety operating instructions, personnel should be evacuated prior to discharge where using carbon dioxide, Halon 1211, or HCFC-124, as their effects are dangerous to life. All hatches, ports, doors, or other openings to areas covered by a fixed system should be closed prior to release, if possible.

Annex C Operation and Maintenance

This annex is not a part of the requirements of this NFPA document but is included for informational purposes only.

C.1 General. The fire and explosion hazards of inboard powered boats should be emphasized because of their basic design and construction. While ventilation for the removal ashore of heavier-than-air flammable vapors is provided at floor level, similar provisions are obviously impossible for boats. Accordingly, the operation and maintenance recommendations included in this annex are intended to supplement the standard.

C.2 Hull.

C.2.1 The entire boat should be kept clean and shipshape.

C.2.1.1 Frequent flushing and cleaning of bilges is recommended.

C.2.1.2 Clean waste and rags should be stowed in metal containers or in metal-lined lockers. Waste and rags coated with oil, paint, paint remover, or polish should be disposed of ashore immediately and should not be stored onboard.

C.2.1.3 Foul weather clothing should be hung loosely in well-ventilated lockers.

C.2.1.4 Paint and varnish removers and the materials they remove are generally highly flammable. Particular caution should be exercised during their use to ensure ample ventilation, to prohibit open lights, fires, and smoking, and to ensure that the removed material is disposed of ashore as quickly as possible.

C.2.1.5 Naked lights and open flames, however small, should not be carried into compartments where gasoline vapor might be present.

C.2.1.6 Gasoline or other flammable solvents should not be used for cleaning purposes.

C.2.2 The ventilation system should be maintained at top efficiency.

C.2.2.1 Ventilation ducts should never be blocked off, and any screening used in cowl or duct openings should be kept clear.

C.2.2.2 If hazardous vapors are present, the entire boat should be opened to free all vapors, and no equipment should be operated until the problem has been corrected.

C.2.3 Precautions During Lightning Conditions.

C.2.3.1 Since the basic purpose of protection against lightning is to ensure the safety of personnel, it is appropriate that the following precautions should be followed:

(1) Boat occupants should remain inside a closed boat to the degree practical during a lightning storm and should not dangle arms or legs in the water.
(2) To the extent consistent with safe handling and navigation of the boat during a lightning storm, contact with any items connected to a lightning protection system, especially in such a way as to create a bridge between the items, should be avoided. For example, an operator should not be permitted to be in contact with the reversing gear levers and the spotlight control handle at the same time.
(3) No occupant should be in the water during a lightning storm.

Copyright National Fire Protection Association
Provided by IHS under license with NFPA
No reproduction or networking permitted without license from IHS
Not for Resale

C.2.3.2 The following should be considered as maintenance suggestions for lightning protection systems:

(1) A whip-type radio antenna should not be tied down during a lightning storm if it has been designed as a part of the lightning protection system.
(2) If a boat has been struck by lightning, compasses and electrical gear should be checked to determine whether damage or change in calibration has occurred.

C.3 Engines.

C.3.1 Engines, including their fuel, electric, and cooling systems, always should be maintained in satisfactory operating condition in accordance with the manufacturer's instructions.

C.3.1.1 Before starting any engine, the following procedures should be performed:

(1) Ventilate the engine compartment.
(2) Open the hatches to any compartment into which vapors can flow, and make particular use of the senses of sight and smell to detect fuel leaks.
(3) Check that the lubrication oil reservoir is full.
(4) Check that the engine-cooling water intakes are open.

C.3.1.2 When engine starts, the following procedures should be performed:

(1) Check the oil pressure.
(2) Verify the cooling-water circulation (e.g., check exhaust discharge).

C.3.1.3 During operation, frequent observation checks should be made of oil pressure and cooling-water temperature.

C.4 Fuel Systems.

C.4.1 Gasoline vapors are heavier than air and cannot escape from low-lying pockets such as bilges unless drawn or forced out. An atmospheric concentration of gasoline vapor as low as 1.25 percent is sufficient to create a mixture that can explode by means of only a slight spark.

C.4.1.1 The entire fuel system, including tanks, piping (including tank vent line), and accessories, should be checked frequently for leaks or evidence of corrosion.

C.4.1.2 All connections should be maintained tight at all times.

C.4.1.3 Fuel carried onboard outside of a fixed fuel system should be stored in an approved container or in a portable tank such as is provided for outboard engines and should be stowed safely outside of engine or living compartments.

C.4.2 Utmost care should be exercised during fueling operations.

C.4.2.1 Fueling should never be done at night except under well-lighted conditions.

C.4.2.2 During fueling operations, smoking should be forbidden onboard or anywhere nearby.

C.4.2.3 Before opening tanks, the following procedures should be performed:

(1) Shut down engines, motors, and fans.
(2) Extinguish all open flames, including open pilot lights.
(3) Close all ports, windows, doors, and hatches.
(4) Determine the quantity of fuel to be taken aboard in advance of fueling operations.

C.4.2.4 The fuel delivery nozzle should be put in contact with the fill pipe before the flow of fuel is begun, and this contact should be maintained continuously until fuel flow has stopped. There is a serious hazard posed by static discharge unless this practice is observed.

C.4.2.5 Tanks should not be filled completely. Allow a minimum of 2 percent of tank space for expansion. The space allowance should be 6 percent if the temperature of the fuel taken aboard is 32°F (0°C) or lower.

C.4.2.6 The following should be performed after fuel flow has stopped:

(1) Secure the fill cap tightly.
(2) Wipe up any spillage completely and dispose of the rags or waste on shore.
(3) Ventilate all spaces, and check for gasoline vapors before starting any engines or operating any appliances.

C.5 Cooking, Heating, and Auxiliary Appliances.

C.5.1 All flame-operated equipment should be kept clean and maintained in accordance with the manufacturer's instructions.

C.5.1.1 Gasoline should not be used for priming alcohol or kerosene burners, nor should gasoline or other flammable liquids be used for lighting coal, charcoal, or wood stoves.

C.5.1.2 Alcohol, kerosene, and fuel-oil burner tips should be kept clean to avoid choking, extinguishment, and consequent flooding.

C.5.1.2.1 Burners should not be primed when hot.

C.5.1.2.2 Reserve fuel should be limited to minimum needs and should be carried only in approved containers stowed in a safe location outside the engine compartment.

C.5.2 Printed instructions and labeled diagrams for the operation and maintenance of propane systems should be available onboard for ready reference.

C.5.2.1 Only the specific gas for which the system is designed should be used.

C.5.2.2 Particular care should be taken to protect flames from being blown out by boilovers, gusts of wind, or other causes.

C.5.2.3 Containers should be changed in accordance with the instructions in C.5.2.3.1 through C.5.2.3.3 and under the supervision of licensed personnel, when such officers are onboard, or by other responsible persons when no such officers are onboard.

C.5.2.3.1 For single-container systems, the following procedures should be performed:

(1) Close stop valves on container and burn out gas content in the line by lighting burners.
(2) Important — when burners go out, shut them off.
(3) Disconnect empty container, leaving stop valve closed and plugged. Connect the full container.

C.5.2.3.2 For multicontainer systems, the following procedures should be performed:

(1) Close container stop valves.
(2) Burn out gas content in low-pressure lines and proceed with container change as described in C.5.2.3.1(3).

Copyright National Fire Protection Association
Provided by IHS under license with NFPA
No reproduction or networking permitted without license from IHS
Not for Resale

C.5.2.3.3 For both types of systems, the following procedures should be performed:

(1) After turning on the full container, light all burners and allow to burn for a sufficient length of time to ensure that there is no air in the lines to interrupt a continuous flow of gas.
(2) Shut off burners and container stop valves, and test for leaks with soapy water solution.

C.5.2.4 Frequent (at least twice per month) tests of the entire system, performed at service pressure, should be made by closing container valves and observing the gauge. If tight, there should be no noticeable drop in 10 minutes. A test for location of leaks should be made with soapy water solution — never with flame.

C.6 Electrical System. Frequent inspection should be made of all electrical equipment and wiring to ensure against deterioration and faulty conditions such as loose connections, insulation failure, burned switch contacts, fuse replacements, and bonding effectiveness. Battery terminals should be kept clean of corrosive deposits.

C.7 Emergency Equipment. Pyrotechnics should be stored in a dry place in a suitable waterproof container and should be inspected frequently for signs of deterioration. Any sign of deterioration should be cause for replacement.

Annex D Fire Warning Equipment

This annex is not a part of the requirements of this NFPA document but is included for informational purposes only.

D.1 General.

D.1.1 Smoke detection systems installed in conformance with *NFPA 72, National Fire Alarm Code*, and 46 CFR, Subchapter T, Subpart D, 181.400 and 181.450, can be considered acceptable.

D.1.2 An independent modular smoke detecting unit should contain an independent power source and alarm on low power.

D.2 Installation. Smoke alarms and smoke detectors should be installed in accordance with Section D.2 and with the manufacturers' listing and instructions.

D.2.1 Flat Overhead Mounting. Smoke alarms or smoke detectors mounted on an overhead surface should be located no less than 4 in. (102 mm) from the adjoining bulkhead surface.

D.2.2 Sloped Overhead. Smoke alarms or smoke detectors mounted on a sloped overhead should be located in accordance with the following:

(1) No more than 36 in. (914 mm) horizontally from the top of sloped surface
(2) No less than 4 in. (102 mm) vertically from the top of sloped surface

D.2.3 Bulkhead Mounting. Smoke alarms or smoke detectors mounted on bulkheads should be located in accordance with the following:

(1) No less than 4 in. (102 mm) from the adjoining overhead surface
(2) No more than 12 in. (305 mm) from the adjoining overhead surface

D.3 Location.

D.3.1 General Location. Single-station smoke alarms or smoke detectors should be installed in each overnight accommodation space.

D.3.2 Specific Location Recommendations. Smoke alarms or smoke detectors should be installed in accordance with the following criteria:

(1) Smoke alarms or smoke detectors should be located in areas where ambient conditions are within the limits specified by the manufacturer.
(2) Smoke alarms or smoke detectors installed within a 10 ft (6.1 m) horizontal path of a cooking appliance should be equipped with an alarm silencing means or should be of the photoelectric type.
(3) Smoke alarms or smoke detectors should not be installed within 36 in. (914 mm) of a door to a head with shower or tub or galley or the supply grille of a forced air heating or cooling system.
(4) A marine vessel designed for the future installation of a overhead-mounted evaporative cooler or other equipment discharging conditioned air through a ceiling grille into the living area should not have smoke alarms or smoke detectors installed within a 36 in. (914 mm) horizontal path of the future discharge opening.
(5) Where there are open stairs leading to other occupied levels, a smoke alarm or smoke detector should be located near the top of each stairway so that smoke rising in the stairway cannot be prevented from reaching the smoke alarm or smoke detector by an intervening door or obstruction.

D.4 Operational Check Warning Label. A permanent warning label should be affixed in a visible location on or within 24 in. (610 mm) of the smoke alarm.

D.4.1 The label should have the word "WARNING" with minimum ¼ in. (6 mm) high letters and body text with minimum ⅛ in. (3 mm) high letters on a contrasting background.

D.4.2 The label should read as follows:

WARNING: TEST SMOKE ALARM OPERATION AFTER VESSEL HAS BEEN IN STORAGE, BEFORE EACH TRIP, AND AT LEAST ONCE PER WEEK DURING USE. FAILURE TO COMPLY CAN RESULT IN SERIOUS INJURY.

D.5 Maintenance, Testing, and Information.

D.5.1 Following installation, smoke alarms should be functionally tested in accordance with the alarm manufacturers' instructions.

D.5.2 Fire warning equipment should be provided with a convenient means for testing its operation by the marine vessel owner.

D.5.3 Instructions.

D.5.3.1 Marine vessel manufacturers should provide specific instructions from the smoke alarm or smoke detector manufacturer regarding inspection and testing to the marine vessel installer, vessel owner, or other responsible party, during marine vessel installation.

D.5.3.2 Marine vessel manufacturers should provide specific instructions from the smoke alarm or smoke detector manufacturer to the vessel owner that contain the following:

(1) A description of the operation, maintenance, method of testing, and frequency of testing
(2) Instructions that smoke alarms be replaced when they fail to respond to tests, unless otherwise recommended by the manufacturer
(3) Instruction that smoke alarms not remain in service longer than 10 years from the date of installation

Copyright National Fire Protection Association
Provided by IHS under license with NFPA
No reproduction or networking permitted without license from IHS
Not for Resale

D.6 Visible Notification Appliances.

D.6.1 If provided, visible notification appliances installed for the hearing impaired should comply with at least one of the following criteria:

(1) Installed to produce at least 110 candela (cd) at the pillow in sleeping rooms and 15 candela (cd) in all other spaces
(2) Located on the ceiling over a bed and within 16 ft (4.88 m) of a sleeping occupant that produces a light output rating of at least 177 candela (cd)
(3) Located in a sleeping room, mounted more than 24 in. (610 m) below the ceiling, within 16 ft (4.88 m) of the pillow, and having a minimum rating of 110 candela (cd)

D.6.2 Visible notification appliances should not be required to operate from a secondary power source.

D.7 Interconnection. Smoke alarms can be interconnected such that the operation of any one smoke alarm causes the alarm to sound in all smoke alarms within the marine vessel.

D.8 Power Supplies.

D.8.1 Smoke alarms should receive their primary power from one of the following:

(1) A battery source capable of operating the device for at least 7 days in the normal condition, followed by 4 minutes of alarm
(2) A non-replaceable primary battery capable of operating the device for at least 10 years, followed by 4 minutes of alarm, followed by a trouble alarm for 7 days
(3) A hard-wired dc power source (e.g., the vessel's battery)

D.8.2 Smoke detectors can be connected to central controls for power, signal processing, and activation of notification appliances.

D.9 Labeling and Listing.

D.9.1 Smoke alarms should meet ANSI/UL 217, *Standard for Single and Multiple Station Smoke Alarms*, as it applies to "Smoke Alarms for Use in Recreation Vehicles," or be listed for marine applications.

D.9.2 Smoke detectors should meet ANSI/UL 268, *Smoke Detectors for Fire Protective Signaling Systems*, or be listed for applications.

D.9.3 Visible signaling appliances should meet ANSI/UL 1971, *Signaling Devices for Hearing Impaired*, or be listed.

Annex E Extinguisher Inspection and Maintenance Information from NFPA Standards

This annex is not a part of the requirements of this NFPA document but is included for informational purposes only.

E.1 Introduction. This annex is provided as an aid to the user of NFPA 302 by identifying those portions of NFPA standards that pertain to inspection and frequency of maintenance of fixed extinguishing systems and portable fire extinguishers. It is not intended that this annex provide complete information regarding all aspects of servicing fire protection equipment. It is important to note that this information was not copied using NFPA's extract policy and is not intended to be a part of the requirements of NFPA 302 unless specified in Chapter 1 through Chapter 12. While the 2002 edition of NFPA 10, the 2000 edition of NFPA 12, the 2001 edition of NFPA 12A, and the 2000 edition of NFPA 2001 were the most current at the time of the publication of the 2004 edition of NFPA 302, more recent editions might have been issued.

E.2 Definitions. See NFPA 10, *Standard for Portable Fire Extinguishers*, NFPA 12, *Standard on Carbon Dioxide Extinguishing Systems*, NFPA 12A, *Standard on Halon 1301 Fire Extinguishing Systems*, and NFPA 2001, *Standard on Clean Agent Fire Extinguishing Systems*, for definition of terms used in this annex.

E.3 Inspection, Maintenance, and Recharging Portable Fire Extinguishers.

E.3.1 General.

E.3.1.1 This section is concerned with the rules governing inspection, maintenance, and recharging of fire extinguishers. These factors are of prime importance in ensuring operation at the time of a fire. [**10:**6.1.1]

E.3.1.2 The procedure for inspection and maintenance of fire extinguishers varies considerably. Minimal knowledge is necessary to perform a monthly "quick check" or inspection in order to follow the inspection procedure as outlined in E.3.2. A trained person who has undergone the instructions necessary to reliably perform maintenance and has the manufacturer's service manual shall service the fire extinguishers not more than 1 year apart. [**10:**6.1.2]

E.3.1.3 The owner or designated agent or occupant of a property in which fire extinguishers are located shall be responsible for such inspection, maintenance, and recharging. *(See E.3.1.2 and E.3.1.4.)* [**10:**6.1.3]

E.3.1.4 Maintenance, servicing, and recharging shall be performed by trained persons having available the appropriate servicing manual(s), the proper types of tools, recharge materials, lubricants, and manufacturer's recommended replacement parts or parts specifically listed for use in the fire extinguisher. [**10:**6.1.4]

E.3.1.5 Tags or labels shall not be placed on the front of the fire extinguisher. [**10:**6.1.5]

E.3.1.6 Labels indicating fire extinguisher use or classification or both shall be permitted to be placed on the front of the fire extinguisher. [**10:**6.1.6]

E.3.2 Inspection.

E.3.2.1 Frequency. Fire extinguishers shall be inspected when initially placed in service and thereafter at approximately 30-day intervals. Fire extinguishers shall be inspected, manually or by electronic monitoring, at more frequent intervals when circumstances require. [**10:**6.2.1]

E.3.2.2 Procedures. Periodic inspection of fire extinguishers shall include a check of at least the following items:

(1) Location in designated place
(2) No obstruction to access or visibility
(3) Operating instructions on nameplate legible and facing outward
(4) Safety seals and tamper indicators not broken or missing
(5) Fullness determined by weighing or "hefting"
(6) Examination for obvious physical damage, corrosion, leakage, or clogged nozzle
(7) Pressure gauge reading or indicator in the operable range or position
(8) Condition of tires, wheels, carriage, hose, and nozzle checked (for wheeled units)
(9) HMIS label in place [**10:**6.2.2]

Copyright National Fire Protection Association
Provided by IHS under license with NFPA
No reproduction or networking permitted without license from IHS
Not for Resale

E.3.2.3 Corrective Action. When an inspection of any fire extinguisher reveals a deficiency in any of the conditions listed in E.3.2.2, immediate corrective action shall be taken. [**10:**6.2.3]

E.3.2.3.1 Rechargeable Fire Extinguishers. When an inspection of any rechargeable fire extinguisher reveals a deficiency in any of the conditions listed in E.3.2.2(3), E.3.2.2(4), E.3.2.2(5), E.3.2.2(6), E.3.2.2(7), and E.3.2.2(8), it shall be subjected to applicable maintenance procedures. [**10:**6.2.3.1]

E.3.2.3.2 Nonrechargeable Dry Chemical Fire Extinguisher. When an inspection of any nonrechargeable dry chemical fire extinguisher reveals a deficiency in any of the conditions listed in E.3.2.2(3), E.3.2.2(5), E.3.2.2(6), and E.3.2.2(7), it shall be removed from further use, discharged, and destroyed at the direction of the owner or returned to the manufacturer. [**10:**6.2.3.2]

E.3.2.3.3 Nonrechargeable Halon Agent Fire Extinguisher. When an inspection of any nonrechargeable fire extinguisher containing a halon agent reveals a deficiency in any of the conditions listed in E.3.2.2(3), E.3.2.2(5), E.3.2.2(6), and E.3.2.2(7), it shall be removed from service, not discharged, and returned to the manufacturer. If the fire extinguisher is not returned to the manufacturer, it shall be returned to a fire equipment dealer or distributor to permit recovery of the halon. [**10:**6.2.3.3]

E.3.2.4 Inspection Recordkeeping.

E.3.2.4.1 Personnel making inspections shall keep records of all fire extinguishers inspected, including those found to require corrective action. [**10:**6.2.4.1]

E.3.2.4.2 At least monthly, the date the inspection was performed and the initials of the person performing the inspection shall be recorded. [**10:**6.2.4.2]

E.3.2.4.3 Records shall be kept on a tag or label attached to the fire extinguisher, on an inspection checklist maintained on file or by an electronic method that provides a permanent record. [**10:**6.2.4.3]

E.4 Inspection and Maintenance of Fixed CO_2 Systems.

E.4.1 General.

E.4.1.1 Persons who inspect, test, maintain, or operate carbon dioxide fire-extinguishing systems shall be thoroughly trained in the functions they perform. [**12:**1-11.4]

E.4.1.2 Prior to testing or maintenance of a fixed carbon dioxide system, all personnel shall be evacuated from the protected space *(See Section 1.6 of NFPA 12).* [**12:**6-3.1]

E.4.2 Inspection.

E.4.2.1 At least every 30 days, an inspection shall be conducted to assess the system's operational condition. [**12:**1-11.1]

E.4.2.2 An inspection is a "quick check" to give reasonable assurance that the extinguishing system is fully charged and operable and is done by seeing that the system is in place, that it has not been activated or tampered with, and that there is no obvious physical damage or condition to prevent operation. As a minimum, the inspection should determine the following:

(1) High-pressure cylinders are in place and properly secured.
(2) For low-pressure storage unit, that pressure gauge shows normal pressure, that tank shutoff valve is open, and that pilot pressure supply valve is open. Liquid level gauge should be observed. If at any time a container shows a loss of more than 10 percent, it should be refilled, unless the minimum gas requirements are still provided.
(3) Carbon dioxide storage is connected to discharge piping and actuators.
(4) All manual actuators are in place and tamper seals are intact.
(5) Nozzles are connected, properly aligned, and free from obstructions and foreign matter.
(6) Detectors are in place and free from foreign matter and obstructions.
(7) System control panel is connected and showing "normal-ready" condition. [**12:** A-1-11.1]

E.4.2.3 All system hose including those used as flexible connectors shall be tested every 5 years in accordance with 1-11.2 of NFPA 12. [**12:**1-11.2.1]

E.4.3 Maintenance.

E.4.3.1 A manufacturer's test and maintenance procedure shall be provided to the owner for testing and maintenance of the system. This procedure shall provide for the initial testing of the equipment as well as for periodic test inspection and maintenance of the system. [**12:**1-11.3.1]

E.4.3.2 The following shall be verified by competent personnel at least annually using available documentation required in 1-7.2.6 of NFPA 12.

(1) Check and test the carbon dioxide system for proper operation.
(2) Check that there have been no changes to the size, type, and configuration of the hazard and system. [**12:**1-11.3.2]

E.4.3.2.1 The goal of this maintenance and testing shall be not only to ensure that the system is in full operating condition, but shall indicate the probable continuance of that condition until the next inspection. [**12:**1-11.3.2.1]

E.4.3.2.2 Suitable discharge tests shall be made when any maintenance indicates their advisability. Prior to testing, proper safety procedures shall be reviewed. *(See Section 1-6 and A-1-6 of NFPA 12.)* [**12:**1-11.3.2.2]

E.4.3.3 A maintenance report with recommendations shall be filed with the owner. [**12:**1-11.3.3]

E.4.3.4 Between the regular service contract maintenance or tests, the system shall be inspected visually or otherwise by approved or competent personnel who follow an approved schedule. [**12:**1-11.3.4]

E.4.3.5 At least semiannually, all high-pressure cylinders shall be weighed and the date of the last hydrostatic test noted *(see 1-9.5.1 of NFPA 12).* If, at any time, a container shows a loss in net content of more than 10 percent, it shall be refilled or replaced. [**12:**1-11.3.5]

E.4.3.6 At least weekly, the liquid level gauges of low-pressure containers shall be observed. If at any time a container shows a loss of more than 10 percent, it shall be refilled, unless the minimum gas requirements are still provided. [**12:**1-11.3.6]

E.4.3.7 Testing of heat, smoke, and flame detectors shall be in accordance with Chapter 7 of *NFPA 72.* [**12:**1-11.3.7]

E.4.3.8 These systems shall be kept in full operating condition at all times. Use, impairment, and restoration of this protection shall be reported promptly to the authority having jurisdiction. Any troubles or impairments shall be corrected at once by competent personnel. [**12:**1-11.3.8]

Copyright National Fire Protection Association
Provided by IHS under license with NFPA
No reproduction or networking permitted without license from IHS
Not for Resale

E.5 Inspection and Tests of Fixed Halogenated Agent Systems.

E.5.1 General.

E.5.1.1 All persons who could be expected to inspect, test, maintain, operate, or decommission and remove fire extinguishing systems shall be thoroughly trained and kept thoroughly trained in the functions they are expected to perform. [**12A:**4-6]

E.5.1.2 Personnel working in a halon-protected enclosure shall receive training regarding halon safety issues. [**12A:**4-6.1]

E.5.2 Inspection.

E.5.2.1 At least semiannually, all systems shall be thoroughly inspected, tested, and documented for proper operation by trained competent personnel. Tests shall be in accordance with the appropriate NFPA or Canadian standards. [**12A:**4-1.1]

E.5.2.2 Some protected area conditions could require inspections more frequent than semiannually. A service contract with an approved fire protection contractor is recommended. The inspection and test is to be conducted in accordance with the manufacturer's recommendations and procedures and appropriate NFPA standards and guides. Inspection criteria include but are not limited to the following:

(1) Detection. All detectors are to be checked for proper alarm, supervision, and trouble functions.
(2) Actuation.
    (a) Remove automatic actuation controls from agent containers. Test detection system to operate the necessary circuit(s) to simulate agent release.
    (b) Operate all manual devices to simulate agent release.
    (c) After testing, reset and reinstall all actuation controls.
(3) Containers.
    (a) Examine all containers for evidence of corrosion or mechanical damage.
    (b) Check container bracketing and supports to determine that their condition is satisfactory.
(4) Piping and Nozzles.
    (a) Examine piping for any evidence of corrosion.
    (b) Examine pipe hangers and straps to see that the piping is securely supported.
    (c) Check nozzles for proper position and alignment and determine that the orifices are clear and unobstructed.
    (d) Check nozzle seals, if applicable, for signs of deterioration and replace if necessary.
(5) Auxiliary Equipment.
    (a) Operate all auxiliary and supplementary components such as switches, door and window releases, interconnected valves, damper releases, air handling equipment shutdown, and supplementary alarms to ensure that they are in proper operating condition.
    (b) Return all devices to normal "operating" condition after testing. [**12A:** A-4-1]

E.5.2.3 The documented report with recommendations shall be filed with the owner. [**12A:** 4-1.2]

E.5.2.4 The agent quantity and pressure of refillable containers shall be checked. If a container shows a loss in net weight of more than 5 percent or a loss in pressure (adjusted for temperature) of more than 10 percent, it shall be refilled or replaced. When the amount of agent in the container is determined by special measuring devices in lieu of weighing, these devices shall be listed. [**12A:**4-1.3]

E.5.2.5 All halon removed from refillable containers during service or maintenance procedures shall be collected for recycling. [**12A:**4-1.4]

E.5.2.6 Factory-charged nonrefillable containers that do not have a means of pressure indication shall be weighed at least semiannually. If a container shows a loss in net weight of more than 5 percent, it shall be replaced. All factory-charged nonrefillable containers removed from useful service shall be returned for recycling of the agent. [**12A:** 4-1.5]

E.5.2.7 The weight and pressure of the container shall be recorded on a tag attached to the container. [**12A:**4-1.6]

E.5.3 Containers.

E.5.3.1 DOT, CTC, or similar design Halon 1301 cylinders shall not be recharged without a retest if more than 5 years have elapsed since the date of the last test and inspection. The retest shall be permitted to consist of a complete visual inspection as described in the *Code of Federal Regulations*, Title 49, "Transportation," Parts 170–190 and Subpart C, Section 173.34(e)(10), and Section 178.36 through 178.68. In Canada, the corresponding information is set forth in the Canadian Transport Commission's Regulations for the Transportation of Dangerous Commodities by Rail. [**12A:** 4-2.1]

E.5.3.2 Cylinders continuously in service without discharging shall be given a complete external visual inspection every 5 years, in accordance with Compressed Gas Association pamphlet C-6, Section 3, except that the cylinders need not be emptied or stamped while under pressure. [**12A:**4-2.2]

E.5.3.3 Where external visual inspection indicates that the container has been damaged, additional strength tests shall be required. CAUTION: If additional tests used include hydrostatic testing, containers should be thoroughly dried before refilling. [**12A:**4-2.3]

E.5.4 Hoses.

E.5.4.1 All system hoses shall be examined annually for damage. If visual examination shows any deficiency, the hose shall be immediately replaced or tested as specified in 4-3.1 of NFPA 12A. [**12A:**4-3]

E.5.4.2 All hoses shall be tested every 5 years in accordance with 4-3.1 of NFPA 12A. [**12A:**4-3.2]

E.5.5 Enclosure Inspection. At least every 6 months the halon-protected enclosure shall be thoroughly inspected to determine if penetrations or other changes have occurred that could adversely affect halon leakage.

Where the inspection indicates that conditions that could result in inability to maintain the halon concentration, they shall be corrected. If uncertainty still exists, the enclosures shall be retested for integrity. [**12A:**4-4]

E.5.6 Maintenance.

E.5.6.1 These systems shall be maintained in full operating condition at all times. Use, impairment, and restoration of this protection shall be reported promptly to the authority having jurisdiction. [**12A:**4-5.1]

E.5.6.2 Any troubles or impairments shall be corrected at once by competent personnel. [**12A:**4-5.2]

E.5.6.3 Any penetrations made through the halon-protected enclosure shall be sealed immediately. The method of sealing shall restore the original fire resistance rating and tightness of the enclosure. [**12A:**4-5.3]

Copyright National Fire Protection Association
Provided by IHS under license with NFPA
No reproduction or networking permitted without license from IHS
Not for Resale

E.6 Inspection and Tests of Clean Agent Systems.

E.6.1 Training.

E.6.1.1 All persons who could be expected to inspect, test, maintain, or operate fire extinguishing systems shall be thoroughly trained and kept thoroughly trained in the functions they are expected to perform. [**2001:**4-6.1]

E.6.1.2 Personnel working in an enclosure protected by a clean agent shall receive training regarding agent safety issues. [**2001:**4-6.2]

E.6.2 Safety. Safe procedures shall be observed during installation, servicing, maintenance, testing, handling, and recharging of clean agent systems and agent containers. [**2001:**4-8]

E.6.3 Inspection and Testing.

E.6.3.1 The installing contractor shall provide instructions for the operational features and inspection procedures specific to the clean agent system installed on the vessel. [**2001:**5-11.4]

E.6.3.2 At least annually, all systems shall be thoroughly inspected and tested for proper operation by competent personnel. Discharge tests are not required. [**2001:**5-11]

E.6.3.3 An inspection report with recommendations shall be filed with the vessel's master and the owner's agent. The report shall be available for inspection by the authority having jurisdiction. [**2001:**5-11.1]

E.6.3.4 At least annually, the agent quantity of refillable containers shall be checked by competent personnel. The container pressure shall be verified and logged at least monthly by the vessel's crew. [**2001:**5-11.2]

E.6.3.5 For halocarbon clean agents, if a container shows a loss in agent of more than 5 percent or a loss in pressure, adjusted for temperature, of more than 10 percent, it shall be refilled or replaced. [**2001:**5-11.3]

E.6.3.6 For inert gas clean agents that are not liquefied, pressure is an indication of agent quantity. If an inert gas clean agent container shows a loss in pressure, adjusted for temperature, of more than 5 percent, it shall be refilled or replaced. Where container pressure gauges are used for this purpose, they shall be compared to a separate calibrated device at least annually. [**2001:**5-11.3.1]

E.6.3.7 Where the amount of agent in the container is determined by special measuring devices, these devices shall be listed. [**2001:**4-1.3.3]

E.6.3.8 All halocarbon clean agent removed from refillable containers during service or maintenance procedures shall be collected and recycled or disposed of in an environmentally sound manner and in accordance with existing laws and regulations. [**2001:**4-1.4]

E.6.3.9 Factory-charged, nonrefillable containers that do not have a means of pressure indication shall have the agent quantity checked at least semiannually. If a container shows a loss in agent quantity of more than 5 percent, it shall be replaced. All factory-charged, nonrefillable containers removed from useful service shall be returned for recycling of the agent or disposed of in an environmentally sound manner and in accordance with existing laws and regulations. [**2001:**4-1.5]

E.6.3.10 For halocarbon clean agents, the date of inspection, gross weight of cylinder plus agent or net weight of agent, type of agent, person performing the inspection, and, where applicable, the pressure at a recorded temperature shall be recorded on a tag attached to the container. For inert gas clean agents, the date of inspection, type of agent, person performing the inspection, and the pressure at a recorded temperature shall be recorded on a tag attached to the container. [**2001:**4-1.6]

E.6.3.11 Containers.

E.6.3.11.1 U.S. Department of Transportation (DOT), Canadian Transport Commission (CTC), or similar design clean agent containers shall not be recharged without retesting if more than 5 years have elapsed since the date of the last test and inspection. For halocarbon agent storage containers, the retest shall be permitted to consist of a complete visual inspection as described in 49 CFR 173.34(e)(10).

Transporting charged containers that have not been tested within 5 years could be illegal. Federal and local regulations should be consulted. [**2001:**4-2.1]

E.6.3.11.2 Cylinders continuously in service without discharging shall be given a complete external visual inspection every 5 years or more frequently if required. The visual inspection shall be in accordance with Section 3 of CGA C-6, *Standard for Visual Inspection of Steel Compressed Gas Cylinders*, except that the cylinders need not be emptied or stamped while under pressure. Inspections shall be made only by competent personnel and the results recorded on both of the following:

(1) A record tag permanently attached to each cylinder
(2) A suitable inspection report

A completed copy of the inspection report shall be furnished to the owner of the system or an authorized representative. These records shall be retained by the owner for the life of the system. [**2001:**4-2.2]

E.6.3.11.3 Where external visual inspection indicates that the container has been damaged, additional strength tests shall be required. **[2001:**4-2.3]

E.6.3.12 Hoses.

E.6.3.12.1 All system hose shall be examined annually for damage. If visual examination shows any deficiency, the hose shall be immediately replaced or tested as specified in 4-3.2 of NFPA 2001. [**2001:**4-3.1]

E.6.3.12.2 All hose shall be tested every 5 years in accordance with 4-3.2.2 of NFPA 2001. [**2001:**4-3.2.1]

E.6.4 Enclosure Inspection. At least every 12 months, the enclosure protected by the clean agent shall be thoroughly inspected to determine if penetrations or other changes have occurred that could adversely affect agent leakage or change volume of hazard or both. Where the inspection indicates conditions that could result in inability to maintain the clean agent concentration, they shall be corrected. If uncertainty still exists, the enclosures shall be retested for integrity in accordance with 4-7.2.3 of NFPA 2001.

An enclosure inspection is not required every 12 months if a documented administrative control program exists that addresses barrier integrity. [**2001:**4-4]

E.6.5 Maintenance.

E.6.5.1 These systems shall be maintained in full operating condition at all times. Actuation, impairment, and restoration of this protection shall be reported promptly to the authority having jurisdiction. [**2001:**4-5.1]

--`,,,,`-`-`,,`,,`,`,,`---
Copyright National Fire Protection Association
Provided by IHS under license with NFPA
No reproduction or networking permitted without license from IHS
Not for Resale

E.6.5.2 Any troubles or impairments shall be corrected in a timely manner consistent with the hazard protected. [**2001:**4-5.2]

E.6.5.3 Any penetrations made through the enclosure protected by the clean agent shall be sealed immediately. The method of sealing shall restore the original fire resistance rating of the enclosure. [**2001:**4-5.3]

Annex F Informational References

F.1 Referenced Publications. The following documents or portions thereof are referenced within this standard for informational purposes only and are thus not part of the requirements of this document unless also listed in Chapter 2.

F.1.1 NFPA Publications. National Fire Protection Association, 1 Batterymarch Park, Quincy, MA 02169-7471.

NFPA 10, *Standard for Portable Fire Extinguishers*, 2002 edition.

NFPA 58, *Liquefied Petroleum Gas Code*, 2004 edition.

NFPA 70, *National Electrical Code®*, 2005 edition.

NFPA 72®, *National Fire Alarm Code®*, 2002 edition.

NFPA 2001, *Standard on Clean Agent Fire Extinguishing Systems*, 2004 edition.

F.1.2 Other Publications.

F.1.2.1 ABYC Publications. American Boat & Yacht Council, Inc., 3069 Solomon's Island Road, Edgewater, MD 21037-1416.

ABYC A-4, *Fire Fighting Equipment*, 2002.

ABYC E-8, *Alternating Current (AC) Electrical Systems on Boats*, 2003.

ABYC TH-22, *Educational Information about Carbon Monoxide*, 2002.

ABYC TH-23, *Design, Construction, and Testing of Boats in Consideration of Carbon Monoxide*, 2000.

F.1.2.2 ASTM Publication. American Society for Testing and Materials, 100 Barr Harbor Drive, West Conshohocken, PA 19428-2959.

ASTM SI 10, *Standard for Use of the International System of Units (SI): The Modern Metric System*, 1997 edition.

F.1.2.3 CGA Publication. Compressed Gas Association, 4221 Walney Road, 5th Floor, Chantilly, VA 20151-2923.

CGA C-6, *Standard for Visual Inspection of Steel Compressed Gas Cylinders*, 2001.

F.1.2.4 NEMA Publication. National Electrical Manufacturers Association, 1300 North 17th Street, Suite 1847, Rosslyn, VA 22209.

NEMA/ANSI P250, *Enclosures for Electrical Equipment (1000 Volts Maximum)*, 1991.

F.1.2.5 SAE Publications. Society of Automotive Engineers, 400 Commonwealth Drive, Warrendale, PA 15096.

SAE J378, *Recommended Practice for Marine Engine Wiring*, 1988.

SAE J1171, *Recommended Practice for External Ignition Protection of Marine Electrical Devices*, 1986.

SAE J1191, *Recommended Practice for High Tension Cable Assemblies—Marine*, 1986.

SAE J1223, *Recommended Practice for Marine Carburetors and Fuel Injection Throttle Bodies*, 1993.

SAE J1294, *Recommended Practice for Ignition Distributors —Marine*, 1998.

SAE J1428, *Recommended Practice for Marine Circuit Breakers*, 1985.

F.1.2.6 UL Publications. Underwriters Laboratories Inc., 333 Pfingsten Road, Northbrook, IL 60062-2096.

UL 217, *Standard for Single and Multiple Station Smoke Alarms*, 1997.

UL 268, *Smoke Detectors for Fire Protective Signaling Systems*, 1996.

UL 1971, *Signaling Devices for Hearing Impaired*, 2002.

F.1.2.7 U.S. Government Publications. U.S. Government Printing Office, Washington, DC 20402.

Title 33, Code of Federal Regulations, 183.

Title 46, Code of Federal Regulations, 110–113, 181.

Title 49, Code of Federal Regulations, 170–190.

F.2 Informational References. (Reserved)

F.3 References for Extracts. The following documents are listed here to provide reference information, including title and edition, for extracts given throughout the nonmandatory sections of this standard as indicated by a reference in brackets [ ] following a section or paragraph. These documents are not a part of the requirements of this document unless also listed in Chapter 2 for other reasons.

NFPA 10, *Standard for Portable Fire Extinguishers*, 2002 edition.

NFPA 12, *Standard on Carbon Dioxide Extinguishing Systems*, 2000 edition.

NFPA 12A, *Standard on Halon 1301 Fire Extinguishing Systems*, 1997 edition.

NFPA 2001, *Standard on Clean Agent Fire Extinguishing Systems*, 2000 edition.

Copyright National Fire Protection Association
Provided by IHS under license with NFPA
No reproduction or networking permitted without license from IHS
Not for Resale

Index

© 2004 National Fire Protection Association. All Rights Reserved.

The copyright in this index is separate and distinct from the copyright in the document that it indexes. The licensing provisions set forth for the document are not applicable to this index. This index may not be reproduced in whole or in part by any means without the express written permission of NFPA.

-A-

Accessible
Compartments 4.1.1
Definition 3.3.1
Readily ..... *see* Readily accessible
Accommodation spaces 8.5.1, 12.3
Bilges 4.1.4.1
As connecting compartments 4.4.3
Definition 3.3.2
Means of egress 4.1.1.1
Separation from machinery spaces 4.1.2, 4.1.3
Ventilation 8.1.3, A.8.1.3
Air-cooled engines 5.5
Alarms
Continuously energized 9.11.2.2
Excessive engine temperature 5.1.3
Shore power polarity devices 10.7.1, A.10.7.2
Smoke ..... Annex D
Alternating current (ac) electrical systems ..... Chap. 10
Ambient temperature 10.5
Appliances and equipment 10.12
Branch circuits 10.10
Conductors ..... *see* Conductors
Cords, flexible 10.13
Devices employing isolation transformers 10.20.3, 10.20.4
Generators 10.17
Ground-fault circuit interrupters ..... *see* Ground-fault circuit interrupters
Ignition source 10.6, A.10.6.2
Installation 10.14, A.10.14.4, A.10.14.9, A.10.14.10
Isolation of galvanic currents 10.18
Main panelboard 10.16
Main supply 10.9, A.10.9.2.1
Marking 10.3
Controls 10.3.2
Electrical equipment 10.3.3
Shore power inlet 10.3.1
Motors 10.10.6
Overcurrent protection ..... *see* Overcurrent protection
Receptacles 10.15, A.10.15.7
Requirements 10.2, A.10.2.3.2
Shore power ..... *see* Shore power
System voltage 10.4
Appliances ..... Chap. 8
Alternating current (ac) electrical systems 10.12
Coal, charcoal and wood-burning appliances 8.3
Compressed natural gas (CNG) 8.5, A.8.5
Cooking appliance installation 8.2
Direct current (dc) electrical systems 9.12
Electric stoves 8.8
Glow plugs and pilot lights 8.1.9
Heating equipment 8.6
Labels 8.1.7
Liquefied petroleum gas (LPG) 8.5, A.8.5
Liquid fuel 8.4, A.8.4.2.8, A.8.4.6
Fuel tanks 8.4.2, A.8.4.2.8
Sealed combustion chamber heaters 8.4.5
Operation and maintenance C.5
Application of standard 1.3
Approved (definition) 3.2.1, A.3.2.1
Atmosphere, open to the
Definition 3.3.30
Hull spaces 4.2
Authority having jurisdiction (definition) 3.2.2, A.3.2.2

-B-

Batteries 9.3, A.9.3
Cables, installation of 9.14.3, A.9.14.3.2
Chargers 10.10.7
Charging sources, overcurrent protection 9.9.3, A.9.9.3.1
Within charging source 9.9.3.3
Cold cranking rating (definition) 3.3.3
Reserve capacity (definition) 3.3.4
Switches 9.11, A.9.11.5
Trays 9.3.6
Bilges 4.1.4.1
Blowers 4.5.2, 4.5.3, A.4.5.2.2
Bonding conductor (definition) 3.3.5
Branch circuits
Alternating current (ac) systems 10.10
Direct current (dc) systems 9.9.6, 9.11.4
Bulkheads
Bilges, separation of 4.1.4.1, 4.1.4.2
To isolate electrical components ..... 9.8.2(4), 10.6.2(4), A.9.8.2, A.10.6.2(4)
Between machinery spaces and accommodation spaces 4.1.2, 4.1.3
Butane ..... *see* Liquefied petroleum gas (LPG)

-C-

Cable assemblies, high-tension 5.8, A.5.8
Candela (cd) (definition) 3.3.7
Carbon dioxide extinguishers and systems ..... 12.1.1.2, Table 12.1.2.8.3, A.12.1.3.4, Table A.12.1.3.4, Table B.2, Table B.3, B.4.5, B.5.2 to B.5.4, E.4
Carbon monoxide detection 12.2
Carburetors, marine 5.3, A.5.3
Charcoal appliances 8.3
Circuit breakers
Alternating current (ac) systems ..... 10.8.2, 10.9, 10.10.1.2, 10.10.2, A.10.8.2(5), A.10.9.2.1
Direct current (dc) systems ... 9.9.7.1, 9.9.8, A.9.9.8(4), A.9.9.8(5)
Trip-free ..... *see* Trip-free circuit breakers
Clean agent extinguishers and systems ..... 12.1.1.2, Table 12.1.2.8.3, A.12.1.1.2, A.12.1.3, Table A.12.1.3.4, B.5.1 to B.5.3, E.6
Definition 3.3.8, A.3.3.8
Coal appliances 8.3
Compartments
Accessibility 4.1.1
Engine ..... *see* Engine compartments
Natural ventilation system 4.3, 4.4, A.4.3
Open to atmosphere 4.2
Compressed natural gas (CNG)
Appliances 8.5, A.8.5
Definition 3.3.9, A.3.3.9
Conductors
Alternating current (ac) systems 10.13
Grounded ..... *see* Grounded conductors
Grounding ..... *see* Grounding conductors
Physical damage 10.14.11
Polarity, identification of 10.7.3

Copyright National Fire Protection Association
Provided by IHS under license with NFPA
No reproduction or networking permitted without license from IHS
Not for Resale

Receptacles 10.15.2, 10.15.4
Sizes 10.13.6, 10.13.7
Support 10.14.4, A.10.14.4
Bonding (definition) 3.3.5
Direct current (dc) 9.13, 9.14, A.9.13.2, A.9.14
Grounded (definition) 3.3.18.2
Grounding (definition) 3.3.21.2
Overcurrent protection 9.9.3.2, 9.9.3.3.1, 9.9.5, 9.9.6
Physical damage 9.14.4
Size ..... 9.13.5 to 9.13.7, 9.14.5
Support 9.14.6
Grounded ..... *see* Grounded conductors
Grounding ..... *see* Grounding conductors
Containers, LPG or CNG 8.5.9.3, 8.5.9.4, 8.5.10, 8.5.11, 8.5.15.1, 8.5.15.7, 8.5.15.8
Dedicated locker 8.5.15.2
Leakage testing 8.5.15.6.2, 8.5.15.6.3
Cooking appliances ..... *see* Appliances
Cords, flexible ..... 9.13.1, 9.13.4 to 9.13.6, 10.13
Corrosion resistance, fuel tanks 7.2.2
Cranking motor circuits 9.2.5.1, 9.2.6

-D-

Definitions ..... Chap. 3
Detectors, smoke ..... Annex D
Diaphragm-type gasoline pumps 5.2
Direct current (dc) electrical systems, under 50 volts ..... Chap. 9
Ambient temperature 9.7
Appliances and equipment 9.12
Batteries 9.3, A.9.3
Conductors ..... *see* Conductors
Continuously energized parts 9.5
Cords, flexible ..... 9.13.1, 9.13.4 to 9.13.6
Ignition source 9.8, A.9.8.2
Marking 9.6, A.9.6.2
Controls 9.6.1
Equipment 9.6.2
Rated current 9.6.3
Overcurrent protection ..... *see* Overcurrent protection
Plug connectors 9.17
Power distribution system negative connections 9.4
Receptacles 9.16
Requirements 9.2, A.9.2.2
Switches 9.11, A.9.11.5
Wiring ..... 9.13 to 9.15, A.9.13 to A.9.15
Distribution panels ..... *see* Panelboards
Distributors 5.9, A.5.9
Double insulation system (definition) 3.3.10
Dry chemical extinguishers and systems ..... Table B.2, Table B.3, B.4.3, B.4.4, B.5.1 to B.5.3, E.3.2.3.2
Ducts C.2.2.1
Engine-cooling air 5.5.3.2
Natural ventilation ..... 4.3.4 to 4.3.12, A.4.3.4, Table A.4.3.10
Power ventilation systems 4.5.3.5

-E-

Egress, means of 4.1.1
Electrical systems
Alternating current (ac) ..... *see* Alternating current (ac) electrical systems
Direct current (dc), under 50 volts ..... *see* Direct current (dc) electrical systems, under 50 volts
Engines 5.4
Operation and maintenance C.6
Electric stoves 8.8
Emergency equipment C.7
Enclosures 4.1.2, 4.1.3, 4.1.4.1, A.4.1.2
Air-cooled engines 5.5.3
Electrical equipment ..... 10.2.7.1 to 10.2.7.3
Engine ..... *see* Engine compartments
Halon-protected, inspection of E.5.5
Engine compartments 8.5.15.7, 8.5.15.8
Insulation 4.1.6
Natural ventilation system 4.3.1, 4.3.5, 4.4.1
Open to atmosphere 4.2.1
Painting A.4.1.2
Powered ventilation system 4.5, A.4.5.2.2
Engine exhaust systems ..... Chap. 6
Definition 3.3.11, A.3.3.11
Hose connections 6.3
Materials 6.2
Supports 6.1.3
Temperature protection 6.4
Engine negative terminal (definition) 3.3.12
Engines ..... Chap. 5; *see also* Motors
Air-cooled 5.5
Automatic shutdown 5.7
Carburetors 5.3
Cranking motor circuits 9.2.5.1, 9.2.6
Diaphragm-type gasoline pumps 5.2
Distributors 5.9, A.5.9
Electrical components 5.4
Exhaust system ..... *see* Engine exhaust systems
Exposed engine surface temperatures 5.1
High-tension cable assemblies 5.8
Multiple engine installation 9.2.5, 9.2.6
Operation and maintenance C.3
Portable 5.6
Equivalency to standard 1.5
Escape hatches 4.1.1
Exhaust systems ..... *see* Ducts; Engine exhaust systems; Ventilation
Extinguishers, portable fire ..... 12.1.1.2, 12.1.2, A.12.1.1.2, A.12.1.2.1, A.12.1.2.3, B.2 to B.5
Inspection and maintenance ..... Annex E
Installation 12.1.2.9

-F-

Fire protection equipment ..... Chap. 12, Annex B, Annex E
Fire retardant paints and varnishes A.4.1.2
Fires, classification of B.1
Fire warning equipment ..... Annex D
Fixed fire protection systems 12.1.1.2, 12.1.3, A.12.1.1.2, A.12.1.3, B.4, B.5
Connected spaces 12.1.3.3
Inspection and maintenance ..... Annex E
Installation 12.1.3.6, A.12.1.3.6.2
Flammable hydrocarbon mixture (definition) 3.3.13
Flammable vapors 4.6.3, A.4.3, A.4.6.3, C.2.2.2
Fuel lines, fittings, and related accessories 7.5, A.7.5
Anti-siphon protection ..... 7.5.3.5, A.7.5.3.5(5)
Systems without 7.5.3.6, A.7.5.3.6
Exposure fire protection 7.1.5.2, 7.1.5.3
Fill and vent pipes, installation of 7.5.2, A.7.5.2.4, A.7.5.2.10
Fuel feed lines and accessories, installation of 7.5.3, A.7.5.3
Hose clamps 7.5.2.9
Manually operated valves 7.5.1.13
Outlets 7.5.1.12
Plastic components 7.5.1.7, A.7.5.1.7
Fuel pumps 5.2
Fuel systems ..... Chap. 7; *see also* Fuel lines, fittings, and related accessories; Fuel tanks
Exposure fire protection 7.1.5
Ground 7.1.6
Operation and maintenance C.4
Fuel tanks ..... *see also* Fuel tank spaces
Corrosion resistance 7.2.2
Design and construction 7.3
Diesel
Hull integration 7.2.1.2
Stainless steel 7.2.2.5
Exposure fire protection 7.1.5.3

Copyright National Fire Protection Association
Provided by IHS under license with NFPA
No reproduction or networking permitted without license from IHS
Not for Resale

Gasoline
Anti-siphon protection ..... 7.5.3.5, A.7.5.3.5(5)
Hull integration 7.2.1.1
Portable, stowage of 5.6
Ground 7.1.6
Hull integration 7.2.1
Ignition sources 9.8, A.9.8.2
Installation 7.4
Liquid fuel appliances, fuel for 8.4.2, A.8.4.2.8
Gravity tanks 8.4.2.3
Pressurized tanks 8.4.2.2
Materials 7.2, A.7.2.2.5.3
Stowage of portable tanks 5.6
Fuel tank spaces 5.6
Ignition sources 9.8, A.9.8.2
Natural ventilation system 4.3.1, 4.4.1
Painting A.4.1.2
Ventilation 4.2.1
Fuel vapors ..... *see* Flammable vapors
Fuses
Alternating current (ac) ..... 10.8.3, 10.8.4, 10.9.2, 10.10.1.2, 10.10.3, A.10.8.3(3), A.10.9.2.1
Direct current (dc) ..... 9.9.7.1, 9.9.9, 9.9.10.1, A.9.9.9(3)

-G-

Galleys 10.15.6, 10.15.7, A.4.1.2, A.10.15.7
Galvanically compatible metals (definition) 3.3.15, A.3.3.15
Galvanic isolators 10.18
Definition 3.3.14
Generators, alternating current (ac) 10.17
Gross ton (definition) 3.3.16
Ground
Definition 3.3.17
Fuel systems 7.1.6
Grounded conductors
Alternating current (ac) .... 10.2.3, 10.2.8, Figs. 10.7.3(b) and (c), 10.10.2, 10.15.4(1), 10.20.1, 10.20.2, 10.20.5, 10.20.6, A.10.2.3.2
Definition 3.3.18.1
Direct current (dc) (definition) 3.3.18.2
Grounded liquid level gauge transmitters 9.12.2
Grounded systems, dc 9.2.4
Ground-fault circuit interrupters (GFCI) ..... Figs. 10.7.3(g), (h), 10.11, 10.15.8, 10.20.6, 10.20.7, A.10.11.4
Definition 3.3.19
Ground-fault protector (GFP) 10.11.4, A.10.11.4
Definition 3.3.20
Grounding conductors
Alternating current (ac) ..... 10.2.5, Figs. 10.7.3(b), (c), (l), 10.15.2, 10.20.1, 10.20.2, 10.20.8
Definition 3.3.21.1
Direct current (dc) (definition) 3.3.21.2
Grounding systems, dc ..... Figs. A.9.2.2(a), (b)

-H-

Halocarbon agents (definition) 3.3.22, A.3.3.22
Halogenated agent extinguishers and systems ..... Table 12.1.2.8.3, Table B.2, Table B.3, B.5.4, E.3.2.3.3, E.5
Definition 3.3.23, A.3.3.23
Heating equipment 8.6
LPG or CNG 8.5.14.3
Operation and maintenance C.5
Sealed combustion chamber heaters 8.4.5
High-tension cable assemblies 5.8, A.5.8
Hull ..... Chap. 4
Arrangement 4.1.1
Fuel tanks, integration of 7.2.1
Natural ventilation system 4.3, 4.4, A.4.3
Operation and maintenance C.2
Powered ventilation system 4.5, A.4.5.2.2
Spaces open to the atmosphere 4.2
Ventilation openings 4.6, A.4.6.3

-I-

Ignition distributors 5.9, A.5.9
Ignition protection ..... 8.5.6, 9.9.8(5), 9.9.9(3), 10.8.2(5), 10.8.3(3), A.8.5.6, A.9.8.2, A.9.9.8(5), A.9.9.9(3), A.10.8.2(5), A.10.8.3(3)
Definition 3.3.24, A.3.3.24
Ignition sources
Alternating current (ac) electrical systems 10.6, A.10.6.2
Definition 3.3.25
Direct current (dc) electrical systems 9.8, A.9.8.2
Inboard engines ..... *see also* Engines
Definition 3.3.26
Direct current (dc) grounding systems ..... Fig. 9.2.2(a)
Multiple engine installation 9.2.5, 9.2.6
Inspections, fire extinguishers and extinguishing systems ..... Annex E
Insulation 4.1.6
Double insulation system (definition) 3.3.10
Inverters 9.12.5
Isolation transformers ..... *see* Transformers

-L-

Labels/labeled ..... *see also* Warning signs
Alternating current (ac) systems 10.3, 10.7.3, 10.13.8
Appliances 8.1.7
Fuel tank fill openings 8.4.2.8, A.8.4.2.8
Compartments, fire protection information ... 12.1.1.4, A.12.1.1.4
Definition 3.2.3
Direct current (dc) electrical systems 9.6, A.9.6.2
Fuel storage ..... 4.3.2, 7.4.5(3), A.4.3.2
Powered ventilation 4.5.3.7
Lamps 8.7
Lightning protection ..... Chap. 11, C.2.3
Liquefied petroleum gas (LPG)
Appliances 8.5, A.8.5
Definition 3.3.27, A.3.3.27
Liquid fuel appliances 8.4, A.8.4.2.8, A.8.4.6
Listed (definition) 3.2.4, A.3.2.4

-M-

Machinery spaces ..... 10.11.1, 10.15.7, 12.1.2.8, A.10.15.7; *see also* Engine compartments
Accessibility 4.1.5
Definition 3.3.28
Fire extinguishment 1.1.2, 12.1.1.2, A.12.1.1.2
Separation from accommodation spaces 4.1.2, 4.1.3
Maintenance ..... Annex C, Annex E
Marine carburetors 5.3, A.5.3
Marking ..... *see* Labels/labeled; Warning signs
Means of egress 4.1.1
Measurement, units of 1.6, A.1.6
Motor craft (definition) 3.3.29
Motors ..... *see also* Engines
Alternating current (ac) 10.10.6
Direct current (dc) 9.9.4, A.9.9.4.1, A.9.9.4.2

-N-

Natural ventilation system 4.3, 4.4, A.4.3

-O-

Open to the atmosphere
Definition 3.3.30
Hull spaces 4.2
Operations ..... Annex C
Overcurrent protection
Alternating current (ac) systems .... 10.8, A.10.8.2(5), A.10.8.3(3)
Branch circuits 10.10.1.1, 10.10.6, 10.10.7.1
Generators 10.17.2.2, 10.17.2.3
Main supply 10.9.3, A.10.9.3

Copyright National Fire Protection Association
Provided by IHS under license with NFPA
No reproduction or networking permitted without license from IHS
Not for Resale

Devices 9.9.5, 9.9.10, 10.8.1
Definition 3.3.31
Direct current (dc) 9.9, A.9.9
Branch circuit 9.9.6
Charging sources 9.9.3, A.9.9.3.1
Conductors 9.9.3.2
Circuit breakers ..... 9.9.8, A.9.9.8(4), A.9.9.8(5)
Distribution panels, panelboards, and switchboards 9.9.7, A.9.9.7
Fuses ..... 9.9.9, A.9.9.9(3)
Integral overcurrent protection devices 9.9.10
Location ..... 9.9.2, Fig. A.9.9.2
Motors and motor-operated equipment 9.9.4, A.9.9.4.1, A.9.9.4.2
Protection device rating 9.9.5

-P-

Paints and varnishes A.4.1.2, C.2.1.4
Panelboards
Definition 3.3.32, A.3.3.32
Main 10.16
Overcurrent protection 9.9.7, A.9.9.7
Permanently installed (definition) 3.3.33, A.3.3.33
Personal watercraft 1.3.2
Definition 3.3.34
Pigtails 9.9.1.2, 9.12.3
Definition 3.3.35
Plug connectors 9.17
Polarization transformers ..... *see* Transformers
Polarized systems (ac)
Definition 3.3.36, A.3.3.36
Shore power polarity devices 10.7, A.10.7.1
Transformers ..... *see* Transformers
Polarized systems (dc) 9.2.4
Definition 3.3.37
Portable engines 5.6
Portable fuel tanks ..... *see* Fuel tanks
Propane ..... *see* Liquefied petroleum gas (LPG)
Purpose of standard 1.2

-R-

Readily accessible
Anti-siphon protection, shutoff valve ..... A.7.5.3.5(5), A.7.5.3.6
Definition 3.3.39
Escape hatches 4.1.1
Machinery spaces 4.1.5
Main panelboard ..... 10.16.1(1)
Shutoff, fuel tank ..... 7.5.3.5(5) and (6), 7.5.3.6.1
Receptacles
Alternating current (ac) systems 10.15, A.10.15.7
Direct current (dc) systems 9.16
Reducing regulators, LPG/CNG systems 8.5.12, A.8.5.12.4
References ..... Chap. 2, Annex F
Retroactivity of standard 1.4

-S-

Safety relief devices, container 8.5.11
Scope of standard 1.1
Self-limiting
Definition 3.3.40
Generators 10.9.4
Overcurrent protection for devices 9.9.3.3.2
Separation
Accommodation spaces from machinery space 4.1.2, 4.1.3
Bilges 4.1.4.1
Shall (definition) 3.2.5
Sheath (definition) 3.3.41, A.3.3.41
Shore power 10.19
Cable 10.19.2
Circuits, application of types of 10.20
Inlet 10.19.1
Definition 3.3.42
Warning 10.3.1
Polarity devices 10.7, A.10.7.1
Should (definition) 3.2.6
Smoke alarms and detectors ..... 12.3, Annex D
Spaces ..... *see also* Accommodation spaces; Fuel tank spaces; Machinery spaces
Open to atmosphere 4.2
Standard (definition) 3.2.7
Supply openings 4.4.2
Switches 9.11, 10.10.2, A.9.11.5

-T-

Tanks fuel ..... *see* Fuel tanks
Tests, fire extinguishers and extinguishing systems ..... Annex E
Transformers
Isolation ..... 10.2.4.1, Figs. 10.7.3(d), (e), (h), (j), (k), 10.10.2, 10.11.4, 10.19.1.2(4), 10.20.3, 10.20.4, 10.20.7, A.10.11.4
Definition 3.3.43.1
Polarization ..... 10.2.4.1, Figs. 10.7.3(f), (i), (m), 10.10.2, 10.20.5, 10.20.6, 10.20.8
Definition 3.3.43.2
Transmitters, grounded liquid level gauge 9.12.2
Trip-free circuit breakers ..... 9.9.7.1, 9.9.8(2), 9.9.10.1
Definition 3.3.44

-U-

Units of measurement 1.6, A.1.6

-V-

Valves
Container 8.5.11
Manually operated, fuel tank lines 7.5.1.13
Shutoff, fuel tank 7.5.3.5, 7.5.3.6, A.7.5.3.6
Vapors, flammable ..... *see* Flammable vapors
Ventilation C.2.2
Appliances 8.1.3, A.8.1.3
Definition 3.3.45, A.3.3.45
Hull
Arrangement of openings 4.6, A.4.6.3
Fuel vapors, preventing entry of 4.6.3, A.4.6.3
Natural system 4.3, 4.4, A.4.3
Powered system 4.5, A.4.5.2.2
Spaces open to the atmosphere 4.2
Voltmeters 10.16.7

-W-

Warning signs
Appliances 8.4.2.11, 8.4.2.12, 8.4.8
LPG or CNG system 8.5.9, 8.5.14.7
Fuel storage ..... 4.3.2, 7.4.5(3), A.4.3.2
Gasoline engines 8.5.9.5
Powered ventilation 4.5.3.7
Shore power inlet ..... 10.3.1, 10.19.1.2(3)
Water heaters ..... *see* Heating equipment
Watertight
Definition 3.3.46
Plug connections ..... 9.17(3)
Receptacle ..... 9.16.1(2), 10.15.1(2)
Weatherproof
Definition 3.3.47, A.3.3.47
Panelboard ..... 10.16.1(2)
Plug connection ..... 9.17(2)
Receptacles ..... 9.16.1(1), 10.15.1(1)
Wood-burning appliances 8.3

--`,,,`,-`-`,,`,,`,`,,`---

Copyright National Fire Protection Association
Provided by IHS under license with NFPA
No reproduction or networking permitted without license from IHS
Not for Resale

Sequence of Events Leading to Publication of an NFPA Committee Document

Call goes out for proposals to amend existing document or for recommendations on new document.

▼

Committee meets to act on proposals, to develop its own proposals, and to prepare its report.

▼

Committee votes on proposals by letter ballot. If two-thirds approve, report goes forward. Lacking two-thirds approval, report returns to committee.

▼

Report — *Report on Proposals* (ROP) — is published for public review and comment.

▼

Committee meets to act on each public comment received.

▼

Committee votes on comments by letter ballot. If two-thirds approve, supplementary report goes forward. Lacking two-thirds approval, supplementary report returns to committee.

▼

Supplementary report — *Report on Comments* (ROC) — is published for public review.

▼

NFPA membership meets (Annual or Fall Meeting) and acts on committee report (ROP or ROC).

▼

Committee votes on any amendments to report approved at NFPA Annual or Fall Meeting.

▼

Appeals to Standards Council on Association action must be filed within 20 days of the NFPA Annual or Fall Meeting.

▼

Standards Council decides, based on all evidence, whether or not to issue standard or to take other action, including upholding any appeals.

Committee Membership Classifications

The following classifications apply to Technical Committee members and represent their principal interest in the activity of the committee.

M *Manufacturer:* A representative of a maker or marketer of a product, assembly, or system, or portion thereof, that is affected by the standard.

U *User:* A representative of an entity that is subject to the provisions of the standard or that voluntarily uses the standard.

I/M *Installer/Maintainer:* A representative of an entity that is in the business of installing or maintaining a product, assembly, or system affected by the standard.

L *Labor:* A labor representative or employee concerned with safety in the workplace.

R/T *Applied Research/Testing Laboratory:* A representative of an independent testing laboratory or independent applied research organization that promulgates and/or enforces standards.

E *Enforcing Authority:* A representative of an agency or an organization that promulgates and/or enforces standards.

I *Insurance:* A representative of an insurance company, broker, agent, bureau, or inspection agency.

C *Consumer:* A person who is, or represents, the ultimate purchaser of a product, system, or service affected by the standard, but who is not included in the *User* classification.

SE *Special Expert:* A person not representing any of the previous classifications, but who has a special expertise in the scope of the standard or portion thereof.

NOTES:

1. "Standard" connotes code, standard, recommended practice, or guide.
2. A representative includes an employee.
3. While these classifications will be used by the Standards Council to achieve a balance for Technical Committees, the Standards Council may determine that new classifications of members or unique interests need representation in order to foster the best possible committee deliberations on any project. In this connection, the Standards Council may make such appointments as it seems appropriate in the public interest, such as the classification of "Utilities" in the National Electrical Code Committee.
4. Representatives of subsidiaries of any group are generally considered to have the same classification as the parent organization.

--`,,,,`-`-`,,`,,`,`,,`---

Copyright National Fire Protection Association
Provided by IHS under license with NFPA
No reproduction or networking permitted without license from IHS

Not for Resale

NFPA Technical Committee Document Proposal Form

Note: All proposals must be received by 5:00 p.m. EST/EDST on the published proposal closing date.

For further information on the standards-making process, please contact Codes and Standards Administration at 617-984-7249. For technical assistance, please call NFPA at 617-770-3000.

FOR OFFICE USE ONLY
Log #: _____
Date Rec'd: _____

Please indicate in which format you wish to receive your ROP/ROC: ☐ **CD ROM** ☐ **paper** ☐ **download**
(Note: In choosing the download option you intend to view the ROP/ROC from our Website. No copy will be sent to you.)

Date 12/18/02 **Name** John B. Smith **Telephone** 617-555-1212
Company _____
Address 9 Seattle St. **City** Seattle **State** WA **Zip** 02255
Please indicate organization represented (if any) Fire Marshals Assn. of North America

1. **a) NFPA Document Title** National Fire Alarm Code
   b) NFPA No. & Edition NFPA 72, 2002 ed. **c) Section/Paragraph** 4.4.7.1.1

2. **Proposal Recommends:** *(check one)* ☐ **new text** ☐ **revised text** ☒ **deleted text**

3. **Proposal.** *(Include proposed new or revised wording, or identification of wording to be deleted.)* Note: Proposed text should be in legislative format, that is, use underscore to denote wording to be inserted (inserted wording) and strike-through to denote wording to be deleted (~~deleted wording~~). Delete exception.

4. **Statement of Problem and Substantiation for Proposal.** Note: State the problem that will be resolved by your recommendation. Give the specific reason for your proposal including copies of tests, research papers, fire experience, etc. If more than 200 words, it may be abstracted for publication. A properly installed and maintained system should be free of ground faults. The occurrence of one or more ground faults should be required to cause a "trouble" signal because it indicates a condition that could contribute to future malfunction of the system. Ground fault protection has been widely available on these systems for years and its cost is negligible. Requiring it on all systems will promote better installations, maintenance and reliability.

5. ☒ **This Proposal is Original Material.** Note: Original material is considered to be the submitter's own idea based on or as a result of his/her own experience, thought, or research and, to the best of his/her knowledge, is not copied from another source.

   ☐ **This Proposal is Not Original Material; Its Source** ***(if known)*** **is as Follows:** _____

Sample

I hereby grant the NFPA all and full rights in copyright to this proposal, and I understand that I acquire no rights in any publication of NFPA in which this proposal in this or another similar or analogous form is used.

Signature ***(Required)*** John B. Smith

PLEASE USE SEPARATE FORM FOR EACH PROPOSAL • NFPA FAX (617) 770-3500

Mail to: Secretary, Standards Council • NFPA • 1 Batterymarch Park • PO Box 9101 • Quincy, MA 02269-9101

Copyright National Fire Protection Association
Provided by IHS under license with NFPA
No reproduction or networking permitted without license from IHS
Not for Resale

NFPA Technical Committee Document Proposal Form

Note: All proposals must be received by 5:00 p.m. EST/EDST on the published proposal closing date.

For further information on the standards-making process, please contact Codes and Standards Administration at 617-984-7249. For technical assistance, please call NFPA at 617-770-3000.

FOR OFFICE USE ONLY
Log #: _____
Date Rec'd: _____

Please indicate in which format you wish to receive your ROP/ROC: ☐ **CD ROM** ☐ **paper** ☐ **download**
(Note: In choosing the download option you intend to view the ROP/ROC from our Website. No copy will be sent to you.)

Date _____ **Name** _____ **Telephone** _____
Company _____
Address _____ **City** _____ **State** _____ **Zip** _____
Please indicate organization represented (if any) _____

1. **a) NFPA Document Title** _____
   b) NFPA No. & Edition _____ **c) Section/Paragraph** _____

2. **Proposal Recommends:** *(check one)* ☐ **new text** ☐ **revised text** ☐ **deleted text**

3. **Proposal.** *(Include proposed new or revised wording, or identification of wording to be deleted.)* Note: Proposed text should be in legislative format, that is, use underscore to denote wording to be inserted (inserted wording) and strike-through to denote wording to be deleted (~~deleted wording~~). _____

4. **Statement of Problem and Substantiation for Proposal.** Note: State the problem that will be resolved by your recommendation. Give the specific reason for your proposal including copies of tests, research papers, fire experience, etc. If more than 200 words, it may be abstracted for publication. _____

5. ☐ **This Proposal is Original Material.** Note: Original material is considered to be the submitter's own idea based on or as a result of his/her own experience, thought, or research and, to the best of his/her knowledge, is not copied from another source.

   ☐ **This Proposal is Not Original Material; Its Source *(if known)* is as Follows:** _____

I hereby grant the NFPA all and full rights in copyright to this proposal, and I understand that I acquire no rights in any publication of NFPA in which this proposal in this or another similar or analogous form is used.

Signature *(Required)* _____

PLEASE USE SEPARATE FORM FOR EACH PROPOSAL • NFPA FAX (617) 770-3500

Mail to: Secretary, Standards Council • NFPA • 1 Batterymarch Park • PO Box 9101 • Quincy, MA 02269-9101

Copyright National Fire Protection Association
Provided by IHS under license with NFPA
No reproduction or networking permitted without license from IHS
Not for Resale