NFPA 288

Standard Methods of Fire Tests of Floor Fire Door Assemblies Installed Horizontally in Fire Resistance–Rated Floor Systems

2007 Edition

NFPA, 1 Batterymarch Park, Quincy, MA 02169-7471
An International Codes and Standards Organization

Copyright National Fire Protection Association
Provided by IHS under license with NFPA
No reproduction or networking permitted without license from IHS
Not for Resale

IMPORTANT NOTICES AND DISCLAIMERS CONCERNING NFPA DOCUMENTS

NOTICE AND DISCLAIMER OF LIABILITY CONCERNING THE USE OF NFPA DOCUMENTS

NFPA codes, standards, recommended practices, and guides, of which the document contained herein is one, are developed through a consensus standards development process approved by the American National Standards Institute. This process brings together volunteers representing varied viewpoints and interests to achieve consensus on fire and other safety issues. While the NFPA administers the process and establishes rules to promote fairness in the development of consensus, it does not independently test, evaluate, or verify the accuracy of any information or the soundness of any judgments contained in its codes and standards.

The NFPA disclaims liability for any personal injury, property or other damages of any nature whatsoever, whether special, indirect, consequential or compensatory, directly or indirectly resulting from the publication, use of, or reliance on this document. The NFPA also makes no guaranty or warranty as to the accuracy or completeness of any information published herein.

In issuing and making this document available, the NFPA is not undertaking to render professional or other services for or on behalf of any person or entity. Nor is the NFPA undertaking to perform any duty owed by any person or entity to someone else. Anyone using this document should rely on his or her own independent judgment or, as appropriate, seek the advice of a competent professional in determining the exercise of reasonable care in any given circumstances.

The NFPA has no power, nor does it undertake, to police or enforce compliance with the contents of this document. Nor does the NFPA list, certify, test or inspect products, designs, or installations for compliance with this document. Any certification or other statement of compliance with the requirements of this document shall not be attributable to the NFPA and is solely the responsibility of the certifier or maker of the statement.

Copyright National Fire Protection Association
Provided by IHS under license with NFPA
No reproduction or networking permitted without license from IHS
Not for Resale

ADDITIONAL NOTICES AND DISCLAIMERS

Updating of NFPA Documents

Users of NFPA codes, standards, recommended practices, and guides should be aware that these documents may be superseded at any time by the issuance of new editions or may be amended from time to time through the issuance of Tentative Interim Amendments. An official NFPA document at any point in time consists of the current edition of the document together with any Tentative Interim Amendments and any Errata then in effect. In order to determine whether a given document is the current edition and whether it has been amended through the issuance of Tentative Interim Amendments or corrected through the issuance of Errata, consult appropriate NFPA publications such as the National Fire Codes® Subscription Service, visit the NFPA website at www.nfpa.org, or contact the NFPA at the address listed below.

Interpretations of NFPA Documents

A statement, written or oral, that is not processed in accordance with Section 6 of the Regulations Governing Committee Projects shall not be considered the official position of NFPA or any of its Committees and shall not be considered to be, nor be relied upon as, a Formal Interpretation.

Patents

The NFPA does not take any position with respect to the validity of any patent rights asserted in connection with any items which are mentioned in or are the subject of NFPA codes, standards, recommended practices, and guides, and the NFPA disclaims liability for the infringement of any patent resulting from the use of or reliance on these documents. Users of these documents are expressly advised that determination of the validity of any such patent rights, and the risk of infringement of such rights, is entirely their own responsibility.

NFPA adheres to applicable policies of the American National Standards Institute with respect to patents. For further information contact the NFPA at the address listed below.

Law and Regulations

Users of these documents should consult applicable federal, state, and local laws and regulations. NFPA does not, by the publication of its codes, standards, recommended practices, and guides, intend to urge action that is not in compliance with applicable laws, and these documents may not be construed as doing so.

Copyrights

This document is copyrighted by the NFPA. It is made available for a wide variety of both public and private uses. These include both use, by reference, in laws and regulations, and use in private self-regulation, standardization, and the promotion of safe practices and methods. By making this document available for use and adoption by public authorities and private users, the NFPA does not waive any rights in copyright to this document.

Use of NFPA documents for regulatory purposes should be accomplished through adoption by reference. The term "adoption by reference" means the citing of title, edition, and publishing information only. Any deletions, additions, and changes desired by the adopting authority should be noted separately in the adopting instrument. In order to assist NFPA in following the uses made of its documents, adopting authorities are requested to notify the NFPA (Attention: Secretary, Standards Council) in writing of such use. For technical assistance and questions concerning adoption of NFPA documents, contact NFPA at the address below.

For Further Information

All questions or other communications relating to NFPA codes, standards, recommended practices, and guides and all requests for information on NFPA procedures governing its codes and standards development process, including information on the procedures for requesting Formal Interpretations, for proposing Tentative Interim Amendments, and for proposing revisions to NFPA documents during regular revision cycles, should be sent to NFPA headquarters, addressed to the attention of the Secretary, Standards Council, NFPA, 1 Batterymarch Park, P.O. Box 9101, Quincy, MA 02269-9101.

For more information about NFPA, visit the NFPA website at www.nfpa.org.

Copyright National Fire Protection Association
Provided by IHS under license with NFPA
No reproduction or networking permitted without license from IHS
Not for Resale

Copyright © 2006 National Fire Protection Association. All Rights Reserved.

NFPA 288

Standard Methods of

Fire Tests of Floor Fire Door Assemblies Installed Horizontally in Fire Resistance–Rated Floor Systems

2007 Edition

This edition of NFPA 288, *Standard Methods of Fire Tests of Floor Fire Door Assemblies Installed Horizontally in Fire Resistance–Rated Floor Systems*, was prepared by the Technical Committee on Fire Tests. It was issued by the Standards Council on July 28, 2006, with an effective date of August 17, 2006, and supersedes all previous editions.

This edition of NFPA 288 was approved as an American National Standard on August 17, 2006.

Origin and Development of NFPA 288

This test procedure was developed in response to inquiries from outside sources to investigate and establish a testing procedure for floor fire doors. NFPA 80, *Standard for Fire Doors and Fire Windows*, had a reference for horizontal access doors. It required these assemblies to be tested in a horizontal position in accordance with the procedure described in NFPA 251, *Standard Methods of Tests of Fire Endurance of Building Construction and Materials* (now entitled *Standard Methods of Tests of Fire Resistance of Building Construction and Materials*).

NFPA 251 noted that the test standard did not provide for the effect on fire endurance of conventional openings in the assembly unless specifically provided for in the construction tested. This provision limited the testing of the floor fire door to the particular floor/ceiling or roof assembly used. Prior to this test method being developed, some testing laboratories provided testing and labeling of these products. There were many test protocols that had to be assumed, which created inconsistency in the testing procedures and listing requirements.

This test procedure provides for consistency in the testing and listing of floor fire doors. The test procedure has incorporated provisions from NFPA 251 and NFPA 252, *Standard Methods of Fire Tests of Door Assemblies*, where appropriate.

The 2007 edition of NFPA 288 is a reconfirmation of the 2001 edition.

Copyright National Fire Protection Association
Provided by IHS under license with NFPA
No reproduction or networking permitted without license from IHS
Not for Resale

Technical Committee on Fire Tests

William E. Fitch, *Chair*
Omega Point Laboratories Incorporated, TX [RT]

Jesse J. Beitel, Hughes Associates, Incorporated, MD [SE]
April L. Berkol, Starwood Hotels & Resorts Worldwide, Incorporated, NY [U]
Rep. American Hotel & Lodging Association
Robert G. Bill, Jr., FM Global, MA [I]
John A. Blair, The DuPont Company, DE [M]
Rep. Society of the Plastics Industry, Incorporated
Gordon H. Damant, Inter-City Testing & Consulting Corporation of California, CA [SE]
Thomas W. Fritz, Armstrong World Industries, Incorporated, PA [M]
Pravinray D. Gandhi, Underwriters Laboratories Incorporated, IL [RT]
James R. Griffith, Southwest Research Institute, TX [RT]
Gordon E. Hartzell, Hartzell Consulting, Incorporated, TX [SE]
Marcelo M. Hirschler, GBH International, CA [SE]
Alfred J. Hogan, Reedy Creek Improvement District, FL [E]
Rep. International Fire Marshals Association
William E. Koffel, Koffel Associates, Incorporated, MD [SE]
James R. Lawson, U.S. National Institute of Standards and Technology, MD [RT]
Rodney A. McPhee, Canadian Wood Council, Canada [M]
Frederick W. Mowrer, University of Maryland, MD [SE]
David T. Sheppard, U.S. Department of Justice, MD [RT]
Kuma Sumathipala, American Forest & Paper Association, DC [M]
T. Hugh Talley, Hugh Talley Company, TN [M]
Rep. Upholstered Furniture Action Council
Rick Thornberry, The Code Consortium, Incorporated, CA [SE]
William A. Webb, Schirmer Engineering Corporation, IL [I]
Robert A. Wessel, Gypsum Association, DC [M]
Robert J. Wills, American Iron and Steel Institute, AL [M]
Peter J. Willse, GE Global Asset Protection Services, CT [I]

Alternates

Robert M. Berhinig, Underwriters Laboratories Incorporated, IL [RT]
(Alt. to P. D. Gandhi)
Delbert F. Boring, Jr., American Iron and Steel Institute, OH [M]
(Alt. to R. J. Wills)
Richard J. Davis, FM Global, MA [I]
(Alt. to R. G. Bill, Jr.)
Sam W. Francis, American Forest & Paper Association, PA [M]
(Alt. to K. Sumathipala)
Richard G. Gann, U.S. National Institute of Standards and Technology, MD [RT]
(Alt. to J. R. Lawson)
Paul A. Hough, Armstrong World Industries, Incorporated, PA [M]
(Alt. to T. W. Fritz)
Marc L. Janssens, Southwest Research Institute, TX [RT]
(Alt. to J. R. Griffith)
James K. Lathrop, Koffel Associates, Incorporated, CT [SE]
(Alt. to W. E. Koffel)
James A. Milke, University of Maryland, MD [SE]
(Alt. to F. W. Mowrer)
Arthur J. Parker, Hughes Associates, Incorporated, MD [SE]
(Alt. to J. J. Beitel)
Ronald A. Schulz, GE Global Asset Protection Services, MI [I]
(Alt. to P. J. Willse)
Ineke Van Zeeland, Canadian Wood Council, Canada [M]
(Alt. to R. A. McPhee)
Joe Ziolkowski, American Furniture Manufacturers Association, NC [M]
(Alt. to T. H. Talley)

Nonvoting

Robert H. Barker, American Fiber Manufacturers Association, VA [M]
(Alt. to T. L. Jilg)
Tod L. Jilg, Hoechst Celanese Corporation, NC [M]
Rep. American Fiber Manufacturers Association
Rohit Khanna, U.S. Consumer Product Safety Commission, MD [C]

Milosh Puchovsky, NFPA Staff Liaison

This list represents the membership at the time the Committee was balloted on the final text of this edition. Since that time, changes in the membership may have occurred. A key to classifications is found at the back of the document.

NOTE: Membership on a committee shall not in and of itself constitute an endorsement of the Association or any document developed by the committee on which the member serves.

Committee Scope: This Committee shall have primary responsibility for documents on fire testing procedures, for reviewing existing fire test standards and recommending appropriate action to NFPA, for recommending the application of and advising on the interpretation of acceptable test standards for fire problems of concern to NFPA technical committees and members, and for acting in a liaison capacity between NFPA and the committees of other organizations writing fire test standards. This Committee does not cover fire tests that are used to evaluate extinguishing agents, devices, or systems.

Copyright National Fire Protection Association
Provided by IHS under license with NFPA
No reproduction or networking permitted without license from IHS
Not for Resale

Contents

Chapter 1 Administration **288–** 4
1.1 Scope **288–** 4
1.2 Purpose **288–** 4
1.3 Application **288–** 4

Chapter 2 Referenced Publications **288–** 4
2.1 General **288–** 4
2.2 NFPA Publications. (Reserved) **288–** 4
2.3 Other Publications **288–** 4
2.4 References for Extracts in Mandatory Sections. (Reserved) **288–** 4

Chapter 3 Definitions **288–** 4
3.1 General **288–** 4
3.2 NFPA Official Definitions **288–** 4
3.3 General Definition **288–** 4

Chapter 4 Control of Fire Test **288–** 4
4.1 Time–Temperature Curve **288–** 4
4.2 Furnace Temperature Measurements **288–** 5
4.3 Temperatures of Unexposed Surfaces **288–** 5
4.4 Furnace Pressure **288–** 7

Chapter 5 Test Specimen **288–** 7
5.1 Construction and Size **288–** 7
5.2 Mounting **288–** 7
5.3 Clearances **288–** 7
5.4 Protection and Conditioning **288–** 7

Chapter 6 Implementation of Fire Test **288–** 8
6.1 Fire Test **288–** 8
6.2 Furnace Pressure **288–** 8
6.3 Loading **288–** 8

Chapter 7 Reporting Results **288–** 8
7.1 Results **288–** 8

Chapter 8 Conditions of Acceptance **288–** 9
8.1 General **288–** 9

Annex A Explanatory Material **288–** 9

Annex B Recommendations for Thermocouple Pads **288–** 9

Annex C Informational References **288–**10

Index **288–**11

Copyright National Fire Protection Association
Provided by IHS under license with NFPA
No reproduction or networking permitted without license from IHS
Not for Resale

NFPA 288

Standard Methods of

Fire Tests of Floor Fire Door Assemblies Installed Horizontally in Fire Resistance–Rated Floor Systems

2007 Edition

IMPORTANT NOTE: This NFPA document is made available for use subject to important notices and legal disclaimers. These notices and disclaimers appear in all publications containing this document and may be found under the heading "Important Notices and Disclaimers Concerning NFPA Documents." They can also be obtained on request from NFPA or viewed at www.nfpa.org/disclaimers.

NOTICE: An asterisk (*) following the number or letter designating a paragraph indicates that explanatory material on the paragraph can be found in Annex A.

Information on referenced publications can be found in Chapter 2 and Annex C.

Chapter 1 Administration

1.1 Scope.

1.1.1 This standard shall apply to floor fire door assemblies of various materials and types of construction that are installed horizontally in openings of fire resistance–rated floor systems to retard the passage of fire.

1.1.2 Tests made in conformity with this test method demonstrate the performance of floor fire door assemblies during the test exposure. However, such tests shall not be construed as determining the suitability of floor fire door assemblies for use after their exposure to fire.

1.2 Purpose. This test method develops data used to determine the ability of a floor fire door assembly to protect openings in fire resistance–rated floors.

1.3 Application.

1.3.1 This test method evaluates the performance of a floor fire door assembly as follows:

(1) By measuring the ability of the floor fire door to remain in an opening and resist the passage of flame and heat during a predetermined test exposure
(2) By measuring the load-carrying ability of the test specimen during the fire test

1.3.2 This test method shall expose a specimen to a standard fire that is controlled to achieve specified temperatures throughout a specified time period. However, the exposure is not representative of all fire conditions, as fire conditions can vary with changes in the amount, nature, and distribution of fire loading; ventilation; compartment size and configuration; and the thermal-physical properties of the compartment wall, ceiling, and floors. The exposure shall provide a relative measure of the fire performance of floor fire door assemblies under the specified fire exposure conditions.

1.3.3 This test method does not provide the following:

(1) Information on the performance of floor fire door assemblies in floors that are constructed of materials other than those tested
(2) An evaluation of the degree to which a floor fire door assembly contributes to the fire hazard through the generation of smoke, toxic gases, or other products of combustion
(3) A measurement of the degree of control or limitation of the passage of smoke or products of combustion through the floor fire door assembly
(4) Measurement of flame spread over the surface of the floor fire door assembly

Chapter 2 Referenced Publications

2.1 General. The documents or portions thereof listed in this chapter are referenced within this standard and shall be considered part of the requirements of this document.

2.2 NFPA Publications. (Reserved)

2.3 Other Publications.

Merriam-Webster's Collegiate Dictionary, 11th edition. Merriam-Webster, Inc., Springfield, MA, 2003.

2.4 References for Extracts in Mandatory Sections. (Reserved)

Chapter 3 Definitions

3.1 General. The definitions contained in this chapter shall apply to the terms used in this standard. Where terms are not defined in this chapter or within another chapter, they shall be defined using their ordinarily accepted meanings within the context in which they are used. *Merriam-Webster's Collegiate Dictionary*, 11th edition, shall be the source for the ordinarily accepted meaning.

3.2 NFPA Official Definitions.

3.2.1 Shall. Indicates a mandatory requirement.

3.2.2 Should. Indicates a recommendation or that which is advised but not required.

3.2.3 Standard. A document, the main text of which contains only mandatory provisions using the word "shall" to indicate requirements and which is in a form generally suitable for mandatory reference by another standard or code or for adoption into law. Nonmandatory provisions shall be located in an appendix or annex, footnote, or fine-print note and are not to be considered a part of the requirements of a standard.

3.3 General Definition.

3.3.1 Floor Fire Door Assembly. A combination of a fire door, a frame, hardware, and other accessories installed in a horizontal plane, which together provide a specific degree of fire protection to a through-opening in a fire resistance–rated floor.

Chapter 4 Control of Fire Test

4.1 Time–Temperature Curve.

4.1.1 The fire exposure of floor fire door assemblies shall be controlled to conform to the applicable portion of the standard time–temperature curve shown in Figure 4.1.1.

Copyright National Fire Protection Association
Provided by IHS under license with NFPA
No reproduction or networking permitted without license from IHS
Not for Resale

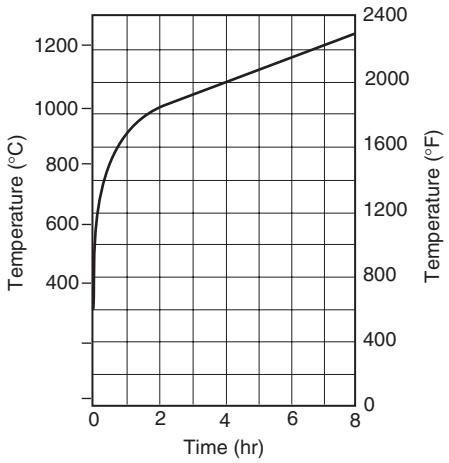

Note: The following are the points that determine the curve:

538°C (1000°F) ..... at 5 minutes
704°C (1300°F) ..... at 10 minutes
843°C (1550°F) ..... at 30 minutes
927°C (1700°F) ..... at 1 hour
1010°C (1850°F) ..... at 2 hours
1093°C (2000°F) ..... at 4 hours
1260°C (2300°F) ..... at 8 hours or over

FIGURE 4.1.1 Standard Time–Temperature Curve.

4.1.2 The standard time–temperature curve shall be defined by the points specified in Table 4.1.2.

4.1.3 The temperature inside the furnace at the start of the test shall be ambient.

4.2 Furnace Temperature Measurements.

4.2.1 The temperature fixed as specified in Section 4.1 shall be the average temperature that is obtained from the readings of not less than nine thermocouples, which are symmetrically disposed and distributed to show the temperature near all parts of the sample. The thermocouples shall be enclosed in protection tubes of such materials and dimensions that the time constant of the protected thermocouple assembly lies within the range of 5 minutes to 7.2 minutes. The exposed length of the pyrometer tube and thermocouple in the furnace chamber shall be not less than 305 mm (12 in.). Other types of protecting tubes or pyrometers shall be permitted to be used that, under test conditions, provide the same time range specified above within the accuracy requirement that applies for the measurement of furnace temperature. The junction of the thermocouples shall be placed 305 mm (12 in.) away from the exposed face of the specimen at the beginning of the test and, during the test, shall not touch the sample as a result of the sample's deflection.

4.2.2 The temperatures shall be measured at intervals not exceeding 1 minute during the test period.

4.2.3 The accuracy of the furnace control shall be such that the area under the time–temperature curve, obtained by averaging the results from the thermocouple readings, is within 10 percent of the corresponding area as specified in Table 4.1.2 for fire tests of 1 hour or less duration, within 7.5 percent for those tests lasting more than 1 hour and not more than 2 hours, and within 5 percent for tests exceeding 2 hours' duration.

4.3 Temperatures of Unexposed Surfaces.

4.3.1* Measurements. Temperatures of unexposed surfaces shall be measured with thermocouples or with thermometers placed under thermocouple pads.

4.3.1.1 Thermocouple pads shall meet the following requirements or shall be otherwise demonstrated to be equivalent by comparative tests:

(1) Length and width — 152 mm ± 3.2 mm (6 in. ± ⅛ in.)
(2) Thickness — 10.2 mm ± 1.3 mm (0.40 in. ± 0.05 in.)
(3) Thermal conductivity [at 65°C (150°F)] — 0.55 ± 0.039 W/m·K (0.38 ± 0.027 Btu·in./hr·ft^2·°F)

4.3.1.2 The wire leads of the thermocouple or the stem of the thermometer shall have an immersion under the pad and shall be in contact with the unexposed surface for not less than 90 mm (3½ in.). The hot junction of the thermocouple, or the bulb of the thermometer, shall be placed under the approximate center of the pad. The outside diameter of protecting or insulating tubes and of thermometer stems shall not exceed 8 mm (5/16 in.). The pad shall be held firmly against the surface and shall fit closely about the thermocouples or thermometer stems. Thermometers shall be of the partial-immersion type, with a length of stem, between the end of the bulb and the immersion mark, of 76 mm (3 in.). The wires for the thermocouple in the length covered by the pad shall be not heavier than No. 18 B & S gauge [1.02 mm (0.04 in.)] and shall be electrically insulated with heat-resistant and moisture-resistant coatings.

4.3.2 Location. Temperature measurements shall be obtained from at least nine points on the surface, as detailed in 4.3.2.1 through 4.3.2.4.

4.3.2.1 Five thermocouples shall be symmetrically disposed, of which one shall be located approximately at the center of the floor fire door assembly and four shall be located approximately at the center of each quadrant. The other four of the nine thermocouples shall be located at the discretion of the testing agency to obtain representative information on the performance of the assembly under test.

4.3.2.2 All of the thermocouples shall be located at a minimum distance of 1½ times the thickness of the construction or 305 mm (12 in.) from the edges of the test specimen.

4.3.2.3 The thermocouples shall be located opposite or on top of structural members if temperatures at such points will be lower than at more representative locations.

4.3.2.4 The thermocouples shall be located over fasteners such as screws, nails, or staples that will be higher or lower in temperature than at a more representative location, where if the aggregate area of any part of such fasteners on the unexposed surface is less than 1 percent of the area within any 152 mm (6 in.) diameter circle, unless the fasteners extend through the assembly.

4.3.3 The temperature shall be measured at intervals not exceeding 1 minute during the test period.

4.3.4 The temperature end point of the fire exposure period shall be determined by the average of the measurements taken at individual points.

Copyright National Fire Protection Association
Provided by IHS under license with NFPA
No reproduction or networking permitted without license from IHS
Not for Resale

Table 4.1.2 Standard Time–Temperature Curve for Control of Fire Tests

		Area Above 20°C Base			Area Above 68°F Base	
Time (hr:min)	Temperature (°C)	°C-min	°C-hr	Temperature (°F)	°F-min	°F-hr
0:00	20	0	0	68	0	0
0:05	538	1,290	22	1,000	2,330	39
0:10	704	4,300	72	1,300	7,740	129
0:15	760	7,860	131	1,399	14,150	236
0:20	795	11,650	194	1,462	20,970	350
0:25	821	15,590	260	1,510	28,050	468
0:30	843	19,650	328	1,550	35,360	589
0:35	862	23,810	397	1,584	42,860	714
0:40	878	28,060	468	1,613	50,510	842
0:45	892	32,390	540	1,638	58,300	971
0:50	905	36,780	613	1,661	66,200	1,103
0:55	916	41,230	687	1,681	74,220	1,237
1:00	927	45,740	762	1,700	82,330	1,372
1:05	937	50,300	838	1,718	90,540	1,509
1:10	946	54,910	915	1,735	98,830	1,647
1:15	955	59,560	993	1,750	107,200	1,787
1:20	963	64,250	1,071	1,765	115,650	1,928
1:25	971	68,990	1,150	1,779	124,180	2,070
1:30	978	73,760	1,229	1,792	132,760	2,213
1:35	985	78,560	1,309	1,804	141,420	2,357
1:40	991	83,400	1,390	1,815	150,120	2,502
1:45	996	88,280	1,471	1,826	158,890	2,648
1:50	1,001	93,170	1,553	1,835	167,700	2,795
1:55	1,006	98,080	1,635	1,843	176,550	2,942
2:00	1,010	103,020	1,717	1,850	185,440	3,091
2:10	1,017	112,960	1,882	1,862	203,330	3,389
2:20	1,024	122,960	2,049	1,875	221,330	3,689
2:30	1,031	133,040	2,217	1,888	239,470	3,991
2:40	1,038	143,180	2,386	1,900	257,720	4,295
2:50	1,045	153,390	2,556	1,912	276,110	4,602
3:00	1,052	163,670	2,728	1,925	294,610	4,910
3:10	1,059	174,030	2,900	1,938	313,250	5,221
3:20	1,066	184,450	3,074	1,950	332,000	5,533
3:30	1,072	194,940	3,249	1,962	350,890	5,848
3:40	1,079	205,500	3,425	1,975	369,890	6,165
3:50	1,086	216,130	3,602	1,988	389,030	6,484
4:00	1,093	226,820	3,780	2,000	408,280	6,805
4:10	1,100	237,590	3,960	2,012	427,670	7,128
4:20	1,107	248,430	4,140	2,025	447,180	7,453
4:30	1,114	259,340	4,322	2,038	466,810	7,780
4:40	1,121	270,310	4,505	2,050	486,560	8,110
4:50	1,128	281,360	4,689	2,062	506,450	8,441
5:00	1,135	292,470	4,874	2,075	526,450	8,774
5:10	1,142	303,660	5,061	2,088	546,580	9,110
5:20	1,149	314,910	5,248	2,100	566,840	9,447
5:30	1,156	326,240	5,437	2,112	587,220	9,787
5:40	1,163	337,630	5,627	2,125	607,730	10,129
5:50	1,170	349,090	5,818	2,138	628,360	10,473
6:00	1,177	360,620	6,010	2,150	649,120	10,819
6:10	1,184	372,230	6,204	2,162	670,000	11,167
6:20	1,191	383,900	6,398	2,175	691,010	11,517
6:30	1,198	395,640	6,594	2,188	712,140	11,869
6:40	1,204	407,450	6,791	2,200	733,400	12,223
6:50	1,211	419,330	6,989	2,212	754,780	12,580
7:00	1,218	431,270	7,188	2,225	776,290	12,938
7:10	1,225	443,290	7,388	2,238	797,920	13,299
7:20	1,232	455,380	7,590	2,250	819,680	13,661
7:30	1,239	467,540	7,792	2,262	841,560	14,026
7:40	1,246	479,760	7,996	2,275	863,570	14,393
7:50	1,253	492,060	8,201	2,288	885,700	14,762
8:00	1,260	504,420	8,407	2,300	907,960	15,133

Copyright National Fire Protection Association
Provided by IHS under license with NFPA
No reproduction or networking permitted without license from IHS
Not for Resale

4.3.5 Where a temperature rise of 181°C (325°F) occurs at any one of these points, the fire exposure period shall be judged as determined in accordance with 7.1.1.

4.4 Furnace Pressure.

4.4.1 The furnace pressure-sensing probes shall be as shown in Figure 4.4.1(a) or Figure 4.4.1(b).

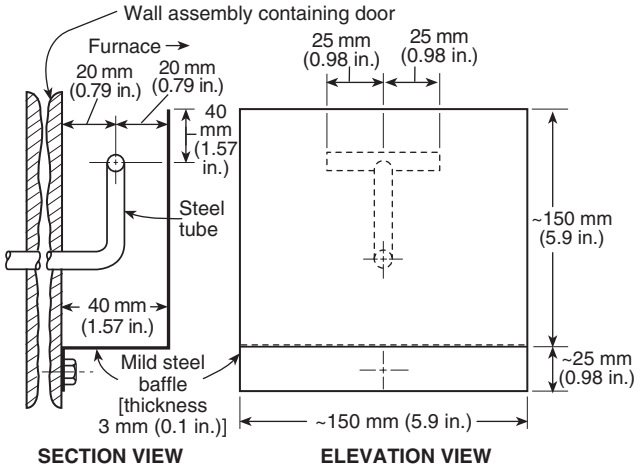

FIGURE 4.4.1(a) Static Pressure-Measuring Device Dimensions.

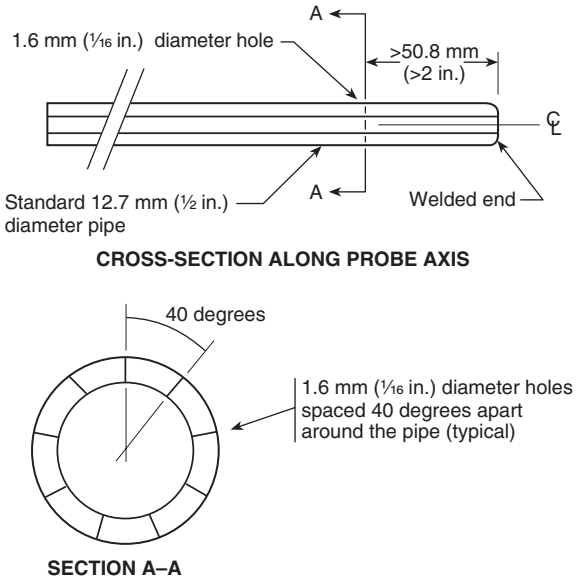

FIGURE 4.4.1(b) Pressure-Sensing Probe.

4.4.2 The pressure shall be measured using a differential pressure instrument capable of reading in increments no coarser than 2.5 Pa (0.01 in. wg) with a precision of ±1.25 Pa (±0.005 in. wg). The differential pressure measurement instrument(s) shall be located to minimize "stack" effects caused by vertical runs of pressure tubing between the furnace probe(s) and instrument locations.

4.4.3 The furnace pressure(s) shall be measured and recorded at intervals not exceeding 1 minute during the test period.

4.4.4 Control of the furnace pressure shall be established no later than 10 minutes after the start of the test and shall be maintained throughout the remainder of the test. The pressure shall be measured at two locations along the centerline of the specimen and 305 mm (12 in.) below the specimen. The pressure — the average of the two readings during the test — shall be reported.

Chapter 5 Test Specimen

5.1 Construction and Size.

5.1.1 The construction and size of a test floor fire door assembly, which can include single doors or doors in pairs, shall be representative of the type of assembly for which the classification or rating is desired. A floor fire door assembly shall be tested in the largest size for which a classification is desired.

5.1.2 This test procedure shall apply to floor assemblies with or without attached, furred, or suspended ceilings and requires application of fire exposure to the underside of the specimen being tested.

5.1.3 The floor in which the floor fire door assembly is tested shall be adequate to retain the assembly throughout the fire test.

5.1.4 Door frame anchors, where used, shall be suitable for the floor construction.

5.2 Mounting.

5.2.1 Floor fire doors shall be mounted either to open downward into the furnace chamber or upward away from the furnace, according to the individual design. However, floor fire doors shall be mounted on the furnace chamber in the same manner as they are to be installed in buildings.

5.2.2 Floor fire door frames shall be evaluated when mounted to verify that the doors open either away from or into the furnace to obtain representative information on the performance of the floor fire door assembly being tested.

5.2.3 The mountings of all floor fire doors shall not prevent free and easy operation of the test door.

5.3 Clearances.

5.3.1 Floor fire doors shall be installed with the maximum clearance between the door and the frame as specified by the manufacturer.

5.3.2 There shall be no openings through the floor fire door assembly when viewed perpendicular to the face of the door.

5.4 Protection and Conditioning.

5.4.1 The floor fire door assembly and test specimen shall be protected during and after fabrication to ensure their quality and condition when tested.

5.4.2 For test assemblies employing concrete, the test shall not be conducted until the floor system is close to its full strength, and, if it contains moisture, until the test assembly achieves an air-dry condition in accordance with the requirements of 5.4.2.1 and 5.4.2.2.

Copyright National Fire Protection Association
Provided by IHS under license with NFPA
No reproduction or networking permitted without license from IHS
Not for Resale

5.4.2.1* Prior to the fire test, the test specimen construction shall be conditioned to provide a moisture condition that is representative of that which is likely to exist in similar construction in buildings. For purposes of standardization, the moisture condition shall be considered to be that which would exist at equilibrium as a result of drying the specimen in an ambient atmosphere of 50 percent relative humidity at 23°C (73°F). Specimens shall be permitted to be tested when a portion of the structure that is 152 mm (6 in.) below the surface has achieved a moisture content that corresponds to drying to equilibrium with air that is in the range of 50 percent to 75 percent relative humidity at 23°C ± 3°C (73°F ± 5°F).

5.4.2.1.1 When the laboratory finds that specimens dried in a heated building fail to meet the requirements of 5.4.2.1 after a 12-month conditioning period, these requirements shall be permitted to be waived.

5.4.2.1.2 In the event that the nature of the construction is such that drying of the specimen interior is prevented by hermetic sealing, the requirements of 5.4.2.1 shall be permitted to be waived.

5.4.2.2* Within 72 hours prior to the fire test, information on the actual moisture content and distribution within the floor system and test specimen shall be obtained. The information shall be included in the test report.

5.4.3 The testing equipment and test specimen undergoing the fire test shall be protected from any condition of wind or weather that might lead to abnormal results.

5.4.3.1 The ambient air temperature at the beginning of the test shall be 10°C to 32°C (50°F to 90°F).

5.4.3.2 The velocity of air across the unexposed surface of the test specimen, measured immediately before the test begins, shall not exceed 1.3 m/sec (4.4 ft/sec) as determined by an anemometer placed at a right angle to the unexposed surface.

5.4.3.3 If mechanical ventilation is used during the test, an airstream shall not be directed across the surface of the specimen.

Chapter 6 Implementation of Fire Test

6.1 Fire Test. The fire test shall be continued until the exposure period of the desired classification or rating is reached, unless the conditions of acceptance that are required in Chapter 8 are exceeded in a shorter period.

6.2 Furnace Pressure. Except for the first 10 minutes of the fire test, the furnace pressure shall be at least 2.5 Pa (0.01 in. wg) greater than the pressure on the unexposed side of the assembly.

6.3 Loading. Throughout the fire test, a superimposed load shall be applied to the specimen to simulate the maximum load condition.

6.3.1 The maximum load condition shall be, as nearly as practicable, the maximum load allowed by the limiting condition of the design under nationally recognized structural design criteria for the floor in which the door is installed.

6.3.2 A fire test shall be permitted to be conducted by applying a restricted load condition to the specimen that shall be identified for a specific load condition other than the maximum permitted load condition.

Chapter 7 Reporting Results

7.1 Results. Results shall be reported based on performance in the tests specified in this standard. The report shall include the information specified in 7.1.1 through 7.1.11.

7.1.1 The performance of the floor fire door assembly shall be reported for one of the following desired exposure periods:

(1) 30 minutes
(2) ¾ hour
(3) 1 hour
(4) 1½ hours
(5) 2 hours
(6) 3 hours and over (in hourly increments)

7.1.2 The temperature measurements of the furnace shall be reported.

7.1.3 The temperature measurements of the unexposed surface shall be reported.

7.1.4 The pressure measurements made inside the furnace shall be reported.

7.1.5 All observations that have a bearing on the performance of the test assembly shall be reported.

7.1.6 Flaming, if any, on the unexposed surface of the door leaf shall be reported.

7.1.7 The amount of movement of any portion of the edges of the door adjacent to the door frame from the original position shall be reported as referenced in Chapter 8.

7.1.8 The materials and the construction of the floor fire door, frame, and floor assembly in which it was installed and the details of the installation, hardware, door frame, and anchors, hangers, guides, trim, finish, and clearance or lap shall be recorded or appropriately referenced to ensure positive identification or duplication in all respects.

7.1.9 Reports of tests in which loading is used shall describe the following:

(1) How the applied load was calculated
(2) The design standard used
(3) The details of the system used to apply the load
(4) The time of load application relative to the start and finish of the test

7.1.10 Reports for tests in which other than maximum load conditions as referenced in Section 6.3 are imposed shall define the conditions of loading used in the test and shall designate "restricted load condition" in the title of the test report.

7.1.11* Where the indicated resistance period is ½ hour or more, as determined by the average or maximum temperature rise on the unexposed surface or within the test specimen, or by failure under load as referenced in Section 6.3, an adjustment shall be made for variation of the furnace exposure from that prescribed, in those cases where the fire test exposure affects the classification, by multiplying the indicated resistance period by two-thirds of the difference in the area between the curve of the average furnace temperature and the standard curve for the first three-fourths of the period and then dividing the product by the area between the standard curve and a baseline of 20°C (68°F) for the same portion of the indicated period. The latter area shall be increased by 30°C-hr or 54°F-hr (1800°C-min or 3240°F-min) to compensate for the thermal lag of the furnace thermocouples during

Copyright National Fire Protection Association
Provided by IHS under license with NFPA
No reproduction or networking permitted without license from IHS
Not for Resale

the first part of the test. For fire exposure that occurs during the test that is higher or lower than standard, the indicated resistance period shall be increased or decreased by the amount of the correction above or below, respectively, for fire exposure that differs from the standard.

Chapter 8 Conditions of Acceptance

8.1 General. A floor fire door assembly shall be considered as meeting the requirements for acceptable performance when it remains in the opening during the fire tests and complies with the following conditions.

8.1.1 The test assembly shall withstand the fire test without developing any openings through the assembly that can be seen from the unexposed side when observing the location of the suspected opening when viewed perpendicular to the plane of the assembly.

8.1.2 The specimen shall sustain the applied load during the classification period without developing unexposed surface conditions that ignite cotton waste.

8.1.3 The transmission of heat through the specimen during the classification period shall not raise the average temperature on its unexposed surface more than 139°C (250°F) above its initial temperature. Additionally, a temperature rise of 181°C (325°F) shall not be exceeded at any one point.

8.1.4 Hardware shall secure the floor fire door in the closed position in accordance with the conditions of acceptance. In addition, the latch bolt shall remain projected and shall be intact after the test. The hardware shall not be required to be operable following the test.

8.1.5 The movement of floor fire doors shall not result in any portion of the edges that are adjacent to the door frame moving in a direction that is perpendicular to the plane of the floor fire door for a distance from its original position that is greater than the thickness of the door during the fire tests.

8.1.6 The movement of floor fire doors mounted in pairs shall not result in any portion of the meeting edges moving from its original position a distance that is greater than the thickness of the door away from the adjacent door edge in a direction that is perpendicular to the plane of the doors during the fire tests.

8.1.7 Door frames to be evaluated with doors shall remain securely fastened to the floor on all sides and shall not permit through-openings between the frame and the doors or between the frame and the adjacent floor.

Annex A Explanatory Material

Annex A is not a part of the requirements of this NFPA document but is included for informational purposes only. This annex contains explanatory material, numbered to correspond with the applicable text paragraphs.

A.4.3.1 Under certain conditions, it is unsafe or impracticable to use thermometers.

The unexposed surface is the surface that is exposed to ambient air.

Additional information on refractory pads can be found in Annex B.

A.5.4.2.1 If, during the conditioning of the specimen, it appears desirable or is necessary to use accelerated drying techniques, the laboratory conducting the test is responsible for avoiding procedures that significantly alter the structural or fire endurance characteristics of the floor system, test specimen, or both, from those produced as the result of drying in accordance with the procedures required in 5.4.2.1.

See Appendix I of *A Method for Determining the Moisture Condition of Hardened Concrete in Terms of Relative Humidity* for a recommended method for determining the relative humidity within a hardened concrete specimen with electric sensing elements. A similar procedure with electric sensing elements can be used to determine the relative humidity within fire test specimens made with other materials.

With wood constructions, the moisture meter based on the electrical resistance method can be used, where appropriate, as an alternative to the relative humidity method to indicate when wood has attained the proper moisture control. Electrical methods are described on pages 320 and 321 of the 1955 edition of the *Wood Handbook of the Forest Products Laboratory*, U.S. Department of Agriculture. The relationships between relative humidity and moisture content are illustrated by the graphs in Figure 23 on page 327 of this publication. They indicate that wood has a moisture content of 13 percent at a relative humidity of 70 percent for a temperature of 21°C to 27°C (70°F to 80°F).

A.5.4.2.2 If the moisture condition of the fire test assembly is likely to change drastically from the sample taken 72 hours prior to the test, the sample should be taken not later than 24 hours prior to the test.

A.7.1.11 The following formula illustrates how to correct for the variation of furnace exposure:

$$C = \frac{2I(A - A_s)}{3(A_s + L)}$$

where:

C = correction in the same units as I
I = indicated fire resistance period
A = area under the curve of the indicated average furnace temperature for the first three-fourths of the indicated period
A_s = area under the standard furnace curve for the same part of the indicated period
L = lag correction in the same units as A and A_s [30°C-hr or 54°F-hr (1800°C-min or 3240°F-min)]

Annex B Recommendations for Thermocouple Pads

This annex is not a part of the requirements of this NFPA document but is included for informational purposes only.

B.1 Refractory Fiber Pads. Specific product information is being provided for informational purposes only. This product information has not been independently verified, certified, or endorsed by NFPA or any of its Technical Committees.

B.2 Ceraform 126®. Ceraform 126® is a registered trade name of Manville Specialty Products Group, P.O. Box 5108, Denver, CO 80217.

Comparative fire tests have demonstrated that a refractory fiber material, designated Ceraform 126®, placed with the

Copyright National Fire Protection Association
Provided by IHS under license with NFPA
No reproduction or networking permitted without license from IHS
Not for Resale

softer surfaces in contact with the thermocouple, can be substituted for the previously specified asbestos pad where the distortion of the unexposed face of the specimen is minimal. The pads are relatively rigid and should not be used on surfaces that are subject to sharp distortions or discontinuities during the test.

The properties of Ceraform 126® material are as follows:

(1) Length and width — 152 mm ± 3 mm (6 in. ± ⅛ in.).
(2) Thickness — 9.5 mm ± 1.6 mm (0.375 in. ± 0.063 in.). The thickness measurement is made under the light load of a 13 mm (½ in.) diameter pad of a dial micrometer gauge.
(3) Dry weight — 67 g ± 24 g (0.147 lb ± 0.053 lb).
(4) Thermal conductivity [at 65°C (150°F)] — 0.053 W/m ·K ± 0.004 W/m·K (0.37 Btu·in./hr·ft^2·°F ± 0.03 Btu·in./hr·ft^2·°F).
(5) Hardness indentation on soft face should be 1.9 mm ± 0.6 mm (0.075 in. ± 0.025 in.). Indentation is determined in accordance with ASTM C 569, *Test for Indentation Hardness of Preformed Thermal Insulations*. Modified Brinell values of hardness are obtained from the following equation:

$$\text{Hardness} = \frac{2.24}{y}$$

where:
y = measured indentation in inches

(6) The pads are shaped by wetting, forming, and then drying to constant weight to provide complete contact on sharply contoured surfaces.

Supporting data are available from ASTM International, 100 Barr Harbor Drive, P.O. Box C700, West Conshohocken, PA 19428-2959. Request RR:E05-1004.

Annex C Informational References

C.1 Referenced Publications. The documents or portions thereof listed in this annex are referenced within the informational sections of this standard and are not part of the requirements of this document unless also listed in Chapter 2 for other reasons.

C.1.1 NFPA Publications. (Reserved)

C.1.2 Other Publications.

C.1.2.1 ASTM Publications. ASTM International, 100 Barr Harbor Drive, P.O. Box C700, West Conshohocken, PA 19428-2959.

ASTM C 569, *Test for Indentation Hardness of Preformed Thermal Insulations*, 1989 (discontinued).

Menzel, Carl A., *A Method for Determining the Moisture Condition of Hardened Concrete in Terms of Relative Humidity*, Proceedings, American Society for Testing and Materials, Vol. 55, Appendix I, 1955.

C.1.2.2 U.S. Government Publications. U.S. Government Printing Office, Washington, DC 20402.

Wood Handbook of the Forest Products Laboratory, U.S. Department of Agriculture, pp. 320–321, 1955 edition.

C.2 Informational References. (Reserved)

C.3 References for Extracts in Informational Sections. (Reserved)

--`,,```,,,,````-`-`,,`,,`,`,,`---
Copyright National Fire Protection Association
Provided by IHS under license with NFPA
No reproduction or networking permitted without license from IHS
Not for Resale

Index

Copyright © 2006 National Fire Protection Association. All Rights Reserved.

The copyright in this index is separate and distinct from the copyright in the document that it indexes. The licensing provisions set forth for the document are not applicable to this index. This index may not be reproduced in whole or in part by any means without the express written permission of NFPA.

-A-

Air velocity ..... 5.4.3.2 to 5.4.3.3
Ambient temperature 4.1.3, 5.4.3.1
Application of standard 1.3

-C-

Ceilings 5.1.2
Clearances, floor fire door assemblies 5.3
Combustion, passage of products of ..... 1.3.3(3)
Concrete in test assemblies ..... 5.4.2, A.5.4.2.1 to A.5.4.2.2
Conditions of acceptance ..... Chap. 8
Control of fire test ..... Chap. 4
Furnace pressure 4.4
Furnace temperature measurements 4.2, 7.1.2
Time–temperature curve 4.1
Unexposed surfaces, temperatures of 4.3, A.4.3.1

-D-

Definitions ..... Chap. 3
Door frames 7.1.8
Anchors 5.1.4, 7.1.8
Conditions of acceptance 8.1.7
Duration of test ..... 6.1, 7.1.1, 7.1.9(4), 7.1.11, A.7.1.11

-F-

Fire conditions, variations in 1.3.2
Fire exposure, use of floor fire door assemblies 1.1.2
Fire hazard, contribution of fire door assembly to ..... 1.3.3(2)
Flame resistance, measurement of ..... 1.3.1(1), 7.1.11, A.7.1.11
Flame spread over surface of fire door assembly ..... 1.3.3(4)
Flaming on unexposed surface, reporting of 7.1.6
Floor fire door assembly (definition) 3.3.1
Floors 5.1.3
Furnace pressure 4.4, 6.2, 7.1.4
Furnace temperature measurements 4.2, 7.1.2

-H-

Hardware 7.1.8, 8.1.4
Heat resistance, measurement of ..... 1.3.1(1), 7.1.11, A.7.1.11
Heat transmission through specimen 8.1.3

-I-

Implementation of fire test ..... Chap. 6
Duration of test ..... 6.1, 7.1.1, 7.1.9(4), 7.1.11, A.7.1.11
Furnace pressure 6.2
Loading 6.3

-L-

Limitations of test ..... 1.3.2 to 1.3.3
Load-carrying ability, measurement of ..... 1.3.1(2)
Conditions of acceptance 8.1.2
Maximum load 6.3
Reports of tests ..... 7.1.9 to 7.1.10
Restricted load condition 6.3.2, 7.1.10

-M-

Movement of floor fire door assemblies ..... 7.1.7, 8.1.5 to 8.1.6

-O-

Openings, assembly
Conditions of acceptance 8.1.1, 8.1.7
Direction of ..... 5.2.1 to 5.2.2

-P-

Purpose of standard 1.2

-R-

Referenced publications ..... Chap. 2, Annex C
Reporting results ..... Chap. 7, A.7.1.11

-S-

Scope of standard 1.1
Shall (definition) 3.2.1
Should (definition) 3.2.2
Smoke control ..... 1.3.3(3)
Specimen, test ..... Chap. 5, A.5.4.2.1 to A.5.4.2.2
Clearances 5.3
Concrete ..... 5.4.2, A.5.4.2.1 to A.5.4.2.2
Construction and size 5.1
Moisture content ..... 5.4.2, A.5.4.2.1 to A.5.4.2.2
Mounting 5.2
Protection and conditioning ..... 5.4, A.5.4.2.1 to A.5.4.2.2
Wood A.5.4.2.1
Standard (definition) 3.2.3

-T-

Temperature
Furnace temperature measurements 4.2, 7.1.2
Time–temperature curve 4.1, 4.2.3, 7.1.11, A.7.1.11
Unexposed surfaces, temperatures of 4.3, 7.1.3, A.4.3.1
Test specimen ..... *see* Specimen, test
Thermocouple pads ..... 4.3.1, Annex B
Ceraform 126® B.2
Refractory fiber pads A.4.3.1, B.1
Thermocouples ..... 4.2.1, 4.2.3, 4.3.1, 4.3.2.1 to 4.3.2.4, 7.1.11
Time–temperature curve 4.1, 4.2.3, 7.1.11, A.7.1.11

-U-

Unexposed surfaces, temperatures of 4.3, 7.1.3, A.4.3.1

-V-

Ventilation 5.4.3.3

-W-

Weather/wind conditions 5.4.3

Copyright National Fire Protection Association
Provided by IHS under license with NFPA
No reproduction or networking permitted without license from IHS
Not for Resale

Sequence of Events Leading to Issuance of an NFPA Committee Document

Step 1: Call for Proposals

- Proposed new Document or new edition of an existing Document is entered into one of two yearly revision cycles, and a Call for Proposals is published.

Step 2: Report on Proposals (ROP)

- Committee meets to act on Proposals, to develop its own Proposals, and to prepare its Report.
- Committee votes by written ballot on Proposals. If two-thirds approve, Report goes forward. Lacking two-thirds approval, Report returns to Committee.
- Report on Proposals (ROP) is published for public review and comment.

Step 3: Report on Comments (ROC)

- Committee meets to act on Public Comments to develop its own Comments, and to prepare its report.
- Committee votes by written ballot on Comments. If two-thirds approve, Report goes forward. Lacking two-thirds approval, Report returns to Committee.
- Report on Comments (ROC) is published for public review.

Step 4: Technical Report Session

- "*Notices of intent to make a motion"* are filed, are reviewed, and valid motions are certified for presentation at the Technical Report Session. ("Consent Documents" that have no certified motions bypass the Technical Report Session and proceed to the Standards Council for issuance.)
- NFPA membership meets each June at the Annual Meeting Technical Report Session and acts on Technical Committee Reports (ROP and ROC) for Documents with "certified amending motions."
- Committee(s) vote on any amendments to Report approved at NFPA Annual Membership Meeting.

Step 5: Standards Council Issuance

- Notification of intent to file an appeal to the Standards Council on Association action must be filed within 20 days of the NFPA Annual Membership Meeting.
- Standards Council decides, based on all evidence, whether or not to issue Document or to take other action, including hearing any appeals.

Committee Membership Classifications

The following classifications apply to Technical Committee members and represent their principal interest in the activity of the committee.

M *Manufacturer:* A representative of a maker or marketer of a product, assembly, or system, or portion thereof, that is affected by the standard.

U *User:* A representative of an entity that is subject to the provisions of the standard or that voluntarily uses the standard.

I/M *Installer/Maintainer:* A representative of an entity that is in the business of installing or maintaining a product, assembly, or system affected by the standard.

L *Labor:* A labor representative or employee concerned with safety in the workplace.

R/T *Applied Research/Testing Laboratory:* A representative of an independent testing laboratory or independent applied research organization that promulgates and/or enforces standards.

E *Enforcing Authority:* A representative of an agency or an organization that promulgates and/or enforces standards.

I *Insurance:* A representative of an insurance company, broker, agent, bureau, or inspection agency.

C *Consumer:* A person who is, or represents, the ultimate purchaser of a product, system, or service affected by the standard, but who is not included in the *User* classification.

SE *Special Expert:* A person not representing any of the previous classifications, but who has a special expertise in the scope of the standard or portion thereof.

NOTES;
1. "Standard" connotes code, standard, recommended practice, or guide.
2. A representative includes an employee.
3. While these classifications will be used by the Standards Council to achieve a balance for Technical Committees, the Standards Council may determine that new classifications of members or unique interests need representation in order to foster the best possible committee deliberations on any project. In this connection, the Standards Council may make appointments as it deems appropriate in the public interest, such as the classification of "Utilities" in the National Electrical Code Committee.
4. Representatives of subsidiaries of any group are generally considered to have the same classification as the parent organization.

--`,,```,,,,````-`-`,,`,,`,`,,`---

Copyright National Fire Protection Association
Provided by IHS under license with NFPA
No reproduction or networking permitted without license from IHS
Not for Resale

NFPA Technical Committee Document Proposal Form

NOTE: All Proposals must be received by 5:00 p.m. EST/EDST on the published Proposal Closing Date.

For further information on the standards-making process, please contact the Codes and Standards Administration at 617-984-7249.

For technical assistance, please call NFPA at 617-770-3000.

FOR OFFICE USE ONLY

Log #:

Date Rec'd:

Please indicate in which format you wish to receive your ROP/ROC ☐ **electronic** ☐ **paper** ☒ **download**
(Note: If choosing the download option, you must view the ROP/ROC from our website; no copy will be sent to you.)

Date April 1, 200X **Name** John J. Doe **Tel. No.** 716-555-1234

Company Air Canada Pilot's Association

Street Address 123 Summer Street Lane **City** Lewiston **State** NY **Zip** 14092

Please indicate organization represented (if any)

1. (a) NFPA Document Title National Fuel Gas Code **NFPA No. & Year** 54, 200X Edition

(**b) Section/Paragraph** 3.3

2. Proposal Recommends (check one): ☐ new text ☒ revised text ☐ deleted text

3. Proposal (include proposed new or revised wording, or identification of wording to be deleted): [Note: Proposed text should be in legislative format, i.e., use underscore to denote wording to be inserted (inserted wording) and strike-through to denote wording to be deleted (~~deleted wording~~).]

Revise definition of effective ground-fault current path to read:

3.3.78 Effective Ground-Fault Current Path. An intentionally constructed, permanent, low impedance electrically conductive path designed and intended to carry ~~underground~~ electric fault current ~~conditions~~ from the point of a ground fault on a wiring system to the electrical supply source.

4. Statement of Problem and Substantiation for Proposal: (Note: State the problem that would be resolved by your recommendation; give the specific reason for your Proposal, including copies of tests, research papers, fire experience, etc. If more than 200 words, it may be abstracted for publication.)

Change uses proper electrical terms.

5. Copyright Assignment

(a) ☐ **I am the author of the text or other material (such as illustrations, graphs) proposed in this Proposal.**

(b) ☒ **Some or all of the text or other material proposed in this Proposal was not authored by me. Its source is as follows** (please identify which material and provide complete information on its source)**:**

ABC Co.

I hereby grant and assign to NFPA all and full rights in copyright in this Proposal and understand that I acquire no rights in any publication of NFPA in which this Proposal in this or another similar or analogous form is used. Except to the extent that I do not have authority to make an assignment in materials that I have identified in (b) above, I hereby warrant that I am the author of this Proposal and that I have full power and authority to enter into this assignment.

Signature (Required)

PLEASE USE SEPARATE FORM FOR EACH PROPOSAL • NFPA Fax: (617) 770-3500
Mail to: Secretary, Standards Council, National Fire Protection Association, 1 Batterymarch Park, Quincy, MA 02169-7471

8/29/2006

SAMPLE

--`,,```,,,,````-`-`,,`,,`,`,,`---

Copyright National Fire Protection Association
Provided by IHS under license with NFPA
No reproduction or networking permitted without license from IHS

Not for Resale

NFPA Technical Committee Document Proposal Form

NOTE: All Proposals must be received by 5:00 p.m. EST/EDST on the published Proposal Closing Date.

For further information on the standards-making process, please contact the Codes and Standards Administration at 617-984-7249.

For technical assistance, please call NFPA at 617-770-3000.

FOR OFFICE USE ONLY

Log #: _____

Date Rec'd: _____

Please indicate in which format you wish to receive your ROP/ROC ☐ electronic ☐ paper ☐ download
(Note: If choosing the download option, you must view the ROP/ROC from our website; no copy will be sent to you.)

Date _____ **Name** _____ **Tel. No.** _____

Company _____

Street Address _____ **City** _____ **State** _____ **Zip** _____

Please indicate organization represented (if any) _____

1. (a) NFPA Document Title _____ **NFPA No. & Year** _____

(**b) Section/Paragraph** _____

2. Proposal Recommends (check one): ☐ new text ☐ revised text ☐ deleted text

3. Proposal (include proposed new or revised wording, or identification of wording to be deleted): [Note: Proposed text should be in legislative format, i.e., use underscore to denote wording to be inserted (inserted wording) and strike-through to denote wording to be deleted (~~deleted wording~~).]

4. Statement of Problem and Substantiation for Proposal: (Note: State the problem that would be resolved by your recommendation; give the specific reason for your Proposal, including copies of tests, research papers, fire experience, etc. If more than 200 words, it may be abstracted for publication.)

5. Copyright Assignment

(a) ☐ I am the author of the text or other material (such as illustrations, graphs) proposed in this Proposal.

(b) ☐ Some or all of the text or other material proposed in this Proposal was not authored by me. Its source is as follows (please identify which material and provide complete information on its source)**:**

_____

I hereby grant and assign to NFPA all and full rights in copyright in this Proposal and understand that I acquire no rights in any publication of NFPA in which this Proposal in this or another similar or analogous form is used. Except to the extent that I do not have authority to make an assignment in materials that I have identified in (b) above, I hereby warrant that I am the author of this Proposal and that I have full power and authority to enter into this assignment.

Signature (Required) _____

PLEASE USE SEPARATE FORM FOR EACH PROPOSAL • NFPA Fax: (617) 770-3500

Mail to: Secretary, Standards Council, National Fire Protection Association, 1 Batterymarch Park, Quincy, MA 02169-7471

8/29/2006

Copyright National Fire Protection Association
Provided by IHS under license with NFPA
No reproduction or networking permitted without license from IHS
Not for Resale