NFPA 287

Standard Test Methods for Measurement of Flammability of Materials in Cleanrooms Using a Fire Propagation Apparatus (FPA)

2007 Edition

NFPA, 1 Batterymarch Park, Quincy, MA 02169-7471
An International Codes and Standards Organization

--`,,```,,,,````-`-`,,`,,`,`,,`---

Copyright National Fire Protection Association
Provided by IHS under license with NFPA
No reproduction or networking permitted without license from IHS

Not for Resale

IMPORTANT NOTICES AND DISCLAIMERS CONCERNING NFPA DOCUMENTS

NOTICE AND DISCLAIMER OF LIABILITY CONCERNING THE USE OF NFPA DOCUMENTS

NFPA codes, standards, recommended practices, and guides, of which the document contained herein is one, are developed through a consensus standards development process approved by the American National Standards Institute. This process brings together volunteers representing varied viewpoints and interests to achieve consensus on fire and other safety issues. While the NFPA administers the process and establishes rules to promote fairness in the development of consensus, it does not independently test, evaluate, or verify the accuracy of any information or the soundness of any judgments contained in its codes and standards.

The NFPA disclaims liability for any personal injury, property or other damages of any nature whatsoever, whether special, indirect, consequential or compensatory, directly or indirectly resulting from the publication, use of, or reliance on this document. The NFPA also makes no guaranty or warranty as to the accuracy or completeness of any information published herein.

In issuing and making this document available, the NFPA is not undertaking to render professional or other services for or on behalf of any person or entity. Nor is the NFPA undertaking to perform any duty owed by any person or entity to someone else. Anyone using this document should rely on his or her own independent judgment or, as appropriate, seek the advice of a competent professional in determining the exercise of reasonable care in any given circumstances.

The NFPA has no power, nor does it undertake, to police or enforce compliance with the contents of this document. Nor does the NFPA list, certify, test or inspect products, designs, or installations for compliance with this document. Any certification or other statement of compliance with the requirements of this document shall not be attributable to the NFPA and is solely the responsibility of the certifier or maker of the statement.

Copyright National Fire Protection Association
Provided by IHS under license with NFPA
No reproduction or networking permitted without license from IHS
Not for Resale

ADDITIONAL NOTICES AND DISCLAIMERS

Updating of NFPA Documents

Users of NFPA codes, standards, recommended practices, and guides should be aware that these documents may be superseded at any time by the issuance of new editions or may be amended from time to time through the issuance of Tentative Interim Amendments. An official NFPA document at any point in time consists of the current edition of the document together with any Tentative Interim Amendments and any Errata then in effect. In order to determine whether a given document is the current edition and whether it has been amended through the issuance of Tentative Interim Amendments or corrected through the issuance of Errata, consult appropriate NFPA publications such as the National Fire Codes® Subscription Service, visit the NFPA website at www.nfpa.org, or contact the NFPA at the address listed below.

Interpretations of NFPA Documents

A statement, written or oral, that is not processed in accordance with Section 6 of the Regulations Governing Committee Projects shall not be considered the official position of NFPA or any of its Committees and shall not be considered to be, nor be relied upon as, a Formal Interpretation.

Patents

The NFPA does not take any position with respect to the validity of any patent rights asserted in connection with any items which are mentioned in or are the subject of NFPA codes, standards, recommended practices, and guides, and the NFPA disclaims liability for the infringement of any patent resulting from the use of or reliance on these documents. Users of these documents are expressly advised that determination of the validity of any such patent rights, and the risk of infringement of such rights, is entirely their own responsibility.

NFPA adheres to applicable policies of the American National Standards Institute with respect to patents. For further information contact the NFPA at the address listed below.

Law and Regulations

Users of these documents should consult applicable federal, state, and local laws and regulations. NFPA does not, by the publication of its codes, standards, recommended practices, and guides, intend to urge action that is not in compliance with applicable laws, and these documents may not be construed as doing so.

Copyrights

This document is copyrighted by the NFPA. It is made available for a wide variety of both public and private uses. These include both use, by reference, in laws and regulations, and use in private self-regulation, standardization, and the promotion of safe practices and methods. By making this document available for use and adoption by public authorities and private users, the NFPA does not waive any rights in copyright to this document.

Use of NFPA documents for regulatory purposes should be accomplished through adoption by reference. The term "adoption by reference" means the citing of title, edition, and publishing information only. Any deletions, additions, and changes desired by the adopting authority should be noted separately in the adopting instrument. In order to assist NFPA in following the uses made of its documents, adopting authorities are requested to notify the NFPA (Attention: Secretary, Standards Council) in writing of such use. For technical assistance and questions concerning adoption of NFPA documents, contact NFPA at the address below.

For Further Information

All questions or other communications relating to NFPA codes, standards, recommended practices, and guides and all requests for information on NFPA procedures governing its codes and standards development process, including information on the procedures for requesting Formal Interpretations, for proposing Tentative Interim Amendments, and for proposing revisions to NFPA documents during regular revision cycles, should be sent to NFPA headquarters, addressed to the attention of the Secretary, Standards Council, NFPA, 1 Batterymarch Park, P.O. Box 9101, Quincy, MA 02269-9101.

For more information about NFPA, visit the NFPA website at www.nfpa.org.

--`,,```,,,,````-`-`,,`,,`,`,,`---

Copyright National Fire Protection Association
Provided by IHS under license with NFPA
No reproduction or networking permitted without license from IHS

Not for Resale

Copyright © 2006 National Fire Protection Association. All Rights Reserved.

NFPA 287

Standard Test Methods for

Measurement of Flammability of Materials in Cleanrooms Using a Fire Propagation Apparatus (FPA)

2007 Edition

This edition of NFPA 287, *Standard Test Methods for Measurement of Flammability of Materials in Cleanrooms Using a Fire Propagation Apparatus (FPA)*, was prepared by the Technical Committee on Fire Tests. It was issued by the Standards Council on July 28, 2006, with an effective date of August 17, 2006, and supersedes all previous editions.

This edition of NFPA 287 was approved as an American National Standard on August 17, 2006.

Origin and Development of NFPA 287

This standard is based on an apparatus developed by Factory Mutual Research Corporation (now FM Global Research) in the mid-1970s. Since then, several organizations have constructed the apparatus from the original FM Global design. It is currently in active use at Underwriters Laboratories in the United States; Gilbert International Ltd, Manchester, UK; INERIS, Verneuil en Halatte, France; and Rhone-Poulenc Research Center, Decines, France. The apparatus-associated test methods are distinct from other fire standards because of the focus on characterizing hazards associated with large-scale, self-sustained, upward, or flow-aided fire propagation on materials and products, not just the response of materials to an imposed, external heat flux.

This standard was developed to address concerns of the Technical Committee for Cleanrooms.

The 2007 edition is a complete revision for compliance with the *Manual of Style for NFPA Technical Committee Documents*. It also contains a new option for an alternative exhaust system (4.9.2 and Annex C) based on testing conducted by FM Global Research.

Copyright National Fire Protection Association
Provided by IHS under license with NFPA
No reproduction or networking permitted without license from IHS
Not for Resale

Technical Committee on Fire Tests

William E. Fitch, *Chair*
Phyrefish Enterprises, Incorporated, FL [SE]

Barry L. Badders, Jr., Southwest Research Institute, TX [RT]
Jesse J. Beitel, Hughes Associates, Incorporated, MD [SE]
April L. Berkol, Starwood Hotels & Resorts Worldwide, Incorporated, NY [U]
Rep. American Hotel & Lodging Association
Robert G. Bill, Jr., FM Global, MA [I]
John A. Blair, The DuPont Company, DE [M]
Rep. Society of the Plastics Industry, Incorporated
Gordon H. Damant, Inter-City Testing & Consulting Corporation of California, CA [SE]
Thomas W. Fritz, Armstrong World Industries, Incorporated, PA [M]
Pravinray D. Gandhi, Underwriters Laboratories Incorporated, IL [RT]
Gordon E. Hartzell, Hartzell Consulting, Incorporated, TX [SE]
Marcelo M. Hirschler, GBH International, CA [SE]
Alfred J. Hogan, Reedy Creek Improvement District, FL [E]
Rep. International Fire Marshals Association
William E. Koffel, Koffel Associates, Incorporated, MD [SE]
James R. Lawson, U.S. National Institute of Standards and Technology, MD [RT]
Rodney A. McPhee, Canadian Wood Council, Canada [M]
Frederick W. Mowrer, University of Maryland, MD [SE]
David T. Sheppard, U.S. Department of Justice, MD [RT]
Kuma Sumathipala, American Forest & Paper Association, DC [M]
T. Hugh Talley, Hugh Talley Company, TN [M]
Rep. Upholstered Furniture Action Council
Rick Thornberry, The Code Consortium, Incorporated, CA [SE]
William A. Webb, Schirmer Engineering Corporation, IL [I]
Robert A. Wessel, Gypsum Association, DC [M]
Robert J. Wills, American Iron and Steel Institute, AL [M]

Alternates

Robert M. Berhinig, Underwriters Laboratories Incorporated, IL [RT]
(Alt. to P. D. Gandhi)
Delbert F. Boring, Jr., American Iron and Steel Institute, OH [M]
(Alt. to R. J. Wills)
Richard J. Davis, FM Global, MA [I]
(Alt. to R. G. Bill, Jr.)
Sam W. Francis, American Forest & Paper Association, PA [M]
(Alt. to K. Sumathipala)
Richard G. Gann, U.S. National Institute of Standards and Technology, MD [RT]
(Alt. to J. R. Lawson)
Paul A. Hough, Armstrong World Industries, Incorporated, PA [M]
(Alt. to T. W. Fritz)
Marc L. Janssens, Southwest Research Institute, TX [RT]
(Alt. to B. L. Badders, Jr.)
James K. Lathrop, Koffel Associates, Incorporated, CT [SE]
(Alt. to W. E. Koffel)
James A. Milke, University of Maryland, MD [SE]
(Alt. to F. W. Mowrer)
Arthur J. Parker, Hughes Associates, Incorporated, MD [SE]
(Alt. to J. J. Beitel)
Ineke Van Zeeland, Canadian Wood Council, Canada [M]
(Alt. to R. A. McPhee)
Joe Ziolkowski, American Furniture Manufacturers Association, NC [M]
(Alt. to T. H. Talley)

Nonvoting

Robert H. Barker, American Fiber Manufacturers Association, VA [M]
Rep. American Fiber Manufacturers Association
Rohit Khanna, U.S. Consumer Product Safety Commission, MD [C]

Milosh T. Puchovsky, NFPA Staff Liaison

This list represents the membership at the time the Committee was balloted on the final text of this edition. Since that time, changes in the membership may have occurred. A key to classifications is found at the back of the document.

NOTE: Membership on a committee shall not in and of itself constitute an endorsement of the Association or any document developed by the committee on which the member serves.

Committee Scope: This Committee shall have primary responsibility for documents on fire testing procedures, for reviewing existing fire test standards and recommending appropriate action to NFPA, for recommending the application of and advising on the interpretation of acceptable test standards for fire problems of concern to NFPA technical committees and members, and for acting in a liaison capacity between NFPA and the committees of other organizations writing fire test standards. This Committee does not cover fire tests that are used to evaluate extinguishing agents, devices, or systems.

Copyright National Fire Protection Association
Provided by IHS under license with NFPA
No reproduction or networking permitted without license from IHS
Not for Resale

Contents

Chapter 1 Administration **287–** 4
1.1 Scope **287–** 4
1.2 Purpose **287–** 4
1.3 Symbols **287–** 5
1.4 Units **287–** 5

Chapter 2 Referenced Publications **287–** 5
2.1 General **287–** 5
2.2 NFPA Publications. (Reserved) **287–** 5
2.3 Other Publications **287–** 5
2.4 References for Extracts in Mandatory Sections **287–** 5

Chapter 3 Definitions **287–** 6
3.1 General **287–** 6
3.2 NFPA Official Definitions **287–** 6
3.3 General Definitions **287–** 6

Chapter 4 Test Apparatus **287–** 6
4.1 General **287–** 6
4.2 Infrared Heating System **287–** 6
4.3 Load Cell System **287–** 6
4.4 Ignition Pilot Flame **287–** 6
4.5 Ignition Timer **287–** 6
4.6 Gas Analysis System **287–** 8
4.7 Combustion Air Distribution System **287–** 9
4.8 Water-Cooled Shield **287–**11
4.9 Exhaust System **287–**11
4.10 Test Section Instruments **287–**12
4.11 Heat Flux Gauge **287–**13
4.12 Digital Data Collection **287–**14

Chapter 5 Calibration of Equipment **287–**17
5.1 Radiant Flux Heater **287–**17
5.2 Gas Analysis Equipment **287–**17
5.3 Load Cell **287–**17
5.4 Heat Release Calibration **287–**17

Chapter 6 Test Specimens **287–**18
6.1 Specimen Holders **287–**18
6.2 Conditioning **287–**18
6.3 Specimen Size and Preparation **287–**19
6.4 Mounting Methods **287–**20

Chapter 7 Test Procedure **287–**20
7.1 Procedure 1: Ignition Test **287–**20
7.2 Procedure 2: Combustion Test **287–**20
7.3 Procedure 3: Fire Propagation Test **287–**21
7.4 Safety Precautions **287–**21

Chapter 8 Calculations **287–**22
8.1 Critical Heat Flux (CHF) **287–**22
8.2 Thermal Response Parameter (TRP) **287–**22
8.3 Fire Propagation Index (FPI) **287–**22
8.4 Effective Heat of Combustion (EHC) **287–**22
8.5 Smoke Calculations **287–**22
8.6 Convective Heat Release Rate **287–**23

Chapter 9 Report **287–**23
9.1 General Test Description and Ignition Test **287–**23
9.2 Combustion Test **287–**23
9.3 Fire Propagation Test **287–**23

Annex A Explanatory Material **287–**23

Annex B Background Material **287–**24

Annex C Background Information on Exhaust System Option 2 ..... **287–**27

Annex D Informational References **287–**28

Index **287–**30

Copyright National Fire Protection Association
Provided by IHS under license with NFPA
No reproduction or networking permitted without license from IHS
Not for Resale

NFPA 287

Standard Test Methods for

Measurement of Flammability of Materials in Cleanrooms Using a Fire Propagation Apparatus (FPA)

2007 Edition

IMPORTANT NOTE: This NFPA document is made available for use subject to important notices and legal disclaimers. These notices and disclaimers appear in all publications containing this document and may be found under the heading "Important Notices and Disclaimers Concerning NFPA Documents." They can also be obtained on request from NFPA or viewed at www.nfpa.org/disclaimers.

NOTICE: An asterisk (*) following the number or letter designating a paragraph indicates that explanatory material on the paragraph can be found in Annex A.

A reference in brackets [ ] following a section or paragraph indicates material that has been extracted from another NFPA document. As an aid to the user, the complete title and edition of the source documents for extracts in mandatory sections of the document are given in Chapter 2 and those for extracts in informational sections are given in Annex D. Editorial changes to extracted material consist of revising references to an appropriate division in this document or the inclusion of the document number with the division number when the reference is to the original document. Requests for interpretations or revisions of extracted text shall be sent to the technical committee responsible for the source document.

Information on referenced publications can be found in Chapter 2 and Annex D.

Chapter 1 Administration

1.1 Scope.

1.1.1 This standard shall determine and quantify the flammability characteristics of materials containing polymers that are used in cleanroom applications.

1.1.1.1 The propensity of these materials to support fire propagation, as well as other flammability characteristics, are quantified by means of a fire propagation apparatus.

1.1.1.2 Measurements obtained include time to ignition (t_{ign}), chemical $\left(\dot{Q}_{chem}\right)$, and convective $\left(\dot{Q}_c\right)$ heat release rates, mass loss rates $\left(\dot{m}\right)$, and smoke extinction coefficient (D).

1.1.2 This standard includes the following separate test methods:

(1) The ignition test, which shall be used for the determination of t_{ign}
(2) The combustion test, which shall be used for the determination of $\dot{Q}_{chem}$, $\dot{Q}_c$, $\dot{m}$, and D
(3) The fire propagation test, which shall be used for the determination of $\dot{Q}_{chem}$ from burning of a vertical specimen

1.2 Purpose.

1.2.1* The test methods described herein evaluate the suitability of materials and products containing polymers for use in cleanrooms.

1.2.1.1 These test methods also provide the transient response of such materials and products to prescribed heat fluxes in specified inert or oxidizing environments, for use in mathematical modeling.

1.2.1.2 The fire propagation apparatus is also designed to obtain laboratory measurements of generation rates of fire products (CO_2, CO, and, if desired, gaseous hydrocarbons).

1.2.2 Distinguishing features of the fire propagation apparatus include the following:

(1) Tungsten–quartz external (isolated) heaters to provide a radiant flux of up to 65 kW/m^2 to the test specimen, this flux remaining constant whether the surface regresses or expands
(2) Provision for combustion or upward fire propagation in prescribed flows of normal or either oxygen-enriched or oxygen-vitiated air
(3) The capability of measuring heat release rates and exhaust product flows generated during self-sustained, upward fire propagation on a vertical test specimen 0.305 m high
(4) The capability for characterization of the smoke yield from a specimen

1.2.3* The test methods are part of a quantitative methodology for assessing the propensity of materials and products used in cleanrooms to support upward fire propagation and to generate effluent, such as smoke.

1.2.3.1 This methodology consists of the correlation of flammability indices resulting from the test methods with corresponding characteristics measured during real-scale fire propagation experiments.

1.2.3.2 Indices resulting from the test methods include critical heat flux (CHF), thermal response parameter (TRP), fire propagation index (FPI), effective heat of combustion (EHC), and smoke yield (y_s).

1.2.3.3 The TRP and CHF indices are obtained from the ignition test, the EHC and y_s indices are obtained from the combustion test, and the FPI is derived from a fire propagation test in air containing 40 percent oxygen.

1.2.4 This standard is composed of three separate test methods that shall be used in conjunction with a fire propagation apparatus as follows:

(1) The ignition and combustion test methods shall involve the use of horizontal specimens, in normal air, subjected to a controlled external radiant heat flux that shall be set from 0 up to 65 kW/m^2.
(2) The ignition test method shall be conducted under ambient conditions, whereas the combustion and fire propagation test methods shall be conducted with a prescribed airflow within a quartz pipe.
(3) The fire propagation test method shall involve the use of vertical specimens, in air having a 40 percent (by volume) oxygen concentration, subjected to ignition near the base of the specimen from an external radiant heat flux of 50 kW/m^2 and a pilot flame.

1.2.4.1* The ignition test method shall be used to determine the TRP and CHF of horizontal specimens.

Copyright National Fire Protection Association
Provided by IHS under license with NFPA
No reproduction or networking permitted without license from IHS
Not for Resale

1.2.4.1.1 The TRP shall be determined from changes in the time required for sustained ignition by a pilot flame as a function of the magnitude of a constant, externally applied radiant heat flux.

1.2.4.1.2 The CHF shall be determined from the magnitude of externally applied radiant heat flux below which there is no sustained ignition.

1.2.4.1.3 Measurements also shall be made of the time to initial fuel vaporization.

1.2.4.1.4 The surface of the specimens shall be coated with a thin layer of black paint.

1.2.4.2 The combustion test method shall be used to determine the EHC and y_s, as well as the chemical and convective heat release rates when the horizontal test specimen is exposed to an external radiant heat flux of 50 kW/m^2 in the apparatus.

1.2.4.3* The fire propagation test method shall be used to determine the FPI of vertical specimens. A 40 percent oxygen concentration in the inflow shall be used to simulate the radiant heat flux from real-scale flames.

1.2.5 The fire propagation test of vertical specimens shall not be used for materials that melt and form a liquid pool while burning.

1.2.6 This standard does not purport to address all safety problems associated with its use. It shall be the responsibility of the user of this standard to establish appropriate safety and health practices.

1.3 Symbols. The following symbols are used in this document.

A_d = cross-sectional area of test section duct (m^2)
CHF = critical heat flux (kW/m^2)
c_p = specific heat of air at constant pressure (kJ/kg K)
D = extinction coefficient obtained from test section duct laser smoke measuring system (m^{-1})
EHC = effective heat of combustion (kJ/kg)
FPI = fire propagation index (m$^{5/3}$/kW$^{2/3}$sec$^{1/2}$)
$\dot{G}_{CO}$ = mass flow rate of CO in test section duct (kg/sec)
$\dot{G}_{CO_2}$ = mass flow rate of CO_2 in test section duct (kg/sec)
I/I_a = ratio of light intensity measured by laser smoke measuring system to the average value before ignition (–)
K = flow coefficient of averaging pitot tube [duct gas velocity/$(2\Delta p_m/\rho)^{1/2}$] (–)
L = light beam path length for laser smoke measuring system in test section duct (m)
M_{loss} = ultimate change in specimen mass resulting from a combustion test (kg)
$\dot{m}$ = mass loss rate of specimen resulting from combustion (kg/sec)
$\dot{m}_d$ = mass flow rate of gases in the test section duct (kg/sec)
P_{atm} = atmospheric pressure (Pa)
p_m = pressure differential across averaging pitot tube in test section duct (Pa)
$\dot{Q}_{chem}$ = chemical heat release rate (kW)
$\dot{Q}_c$ = convective heat release rate (kW)
T_a = average gas temperature in test section duct before ignition (K)
T_d = gas temperature in test section duct (K)
TRP = thermal response parameter (kW · sec$^{1/2}$/m^2)
t = time (sec)
Δt = time between data scans (sec)
$\dot{v}$ = total volumetric flow rate in test section duct (m^3/sec)
W = horizontal width of a flat specimen or the circumference of a cable specimen (m)
X_{CO_2} = measured carbon dioxide analyzer reading or mole fraction of carbon dioxide (–)
X_{CO} = measured carbon monoxide analyzer reading or mole fraction of CO (–)
y_s = mass of smoke particulates generated per unit mass of fuel vaporized (–)

Superscripts

$\cdot$ = per unit time (sec^{-1})
0 = average value before ignition of the specimen

Subscripts

d = test section duct

1.4 Units. The values stated in SI units shall be regarded as the standard.

Chapter 2 Referenced Publications

2.1 General. The documents or portions thereof listed in this chapter are referenced within this standard and shall be considered part of the requirements of this document.

2.2 NFPA Publications. (Reserved)

2.3 Other Publications.

2.3.1 ASTM Publications. ASTM International, 100 Barr Harbor Drive, P.O. Box C700, West Conshohocken, PA 19428-2959.

ASTM E 1354, *Standard Test Method for Heat and Visible Smoke Release Rates for Materials and Products Using an Oxygen Consumption Calorimeter*, 2004.

2.3.2 Other Publications.

Merriam-Webster's Collegiate Dictionary, 11th edition, Merriam-Webster, Inc., Springfield, MA, 2003.

Newman, J. S. and J. Steciak. 1987. "Characterization of Particulates from Diffusion Flames." *Combustion and Flame*, 67: 55.

2.4 References for Extracts in Mandatory Sections.

NFPA 318, *Standard for the Protection of Semiconductor Fabrication Facilities*, 2006 edition.

--`,,```,,,,````-`-`,,`,,`,`,,`---
Copyright National Fire Protection Association
Provided by IHS under license with NFPA
No reproduction or networking permitted without license from IHS
Not for Resale

Chapter 3 Definitions

3.1 General. The definitions contained in this chapter shall apply to the terms used in this standard. Where terms are not defined in this chapter or within another chapter, they shall be defined using their ordinarily accepted meanings within the context in which they are used. *Merriam-Webster's Collegiate Dictionary,* 11th edition, shall be the source for the ordinarily accepted meaning.

3.2 NFPA Official Definitions.

3.2.1 Shall. Indicates a mandatory requirement.

3.2.2 Standard. A document, the main text of which contains only mandatory provisions using the word "shall" to indicate requirements and which is in a form generally suitable for mandatory reference by another standard or code or for adoption into law. Nonmandatory provisions shall be located in an appendix or annex, footnote, or fine-print note and are not to be considered a part of the requirements of a standard.

3.3 General Definitions.

3.3.1 Cleanroom. A room in which the concentration of airborne particles is controlled to specified limits, including areas below the raised floor and above the ceiling grid if these areas are part of the air path and within the rated construction. [**318,** 2006]

3.3.2 Critical Heat Flux (CHF). The minimum heat flux at or below which there is no ignition.

3.3.3 Effective Heat of Combustion (EHC). The energy generated by chemical reactions per unit mass of fuel vaporized.

3.3.4 Fire Propagation Index (FPI). The propensity of a material to support fire propagation beyond the ignition zone in terms of the chemical heat release rate during upward fire propagation and TRP.

3.3.5 Smoke Yield (y_s). The mass of smoke particulates generated per unit mass of fuel vaporized.

3.3.6 Thermal Response Parameter (TRP). A material characteristic that gives resistance to ignition upon exposure to a prescribed heat flux.

Chapter 4 Test Apparatus

4.1 General.

4.1.1 Dimensions.

4.1.1.1 When dimensions are stated in the text or in figures, they shall be considered mandatory and shall be followed within a tolerance of 0.5 percent.

4.1.1.2 In addition to this tolerance, cylindrical components meant to fit together shall have a total clearance between the two components of 0.1 percent of the clearance diameter, 0.025 mm.

4.1.2 The apparatus shall consist of the following components, shown in Figure 4.1.2: an infrared heating system, a load cell system, an ignition pilot flame and timer, a product gas analysis system, a combustion air distribution system, a water-cooled shield, an exhaust system, test section instruments, calibration instruments, and a digital data acquisition system.

4.2 Infrared Heating System.

4.2.1* Each of four 241 mm long infrared heaters shall contain six tungsten-filament tubular quartz lamps in a compact reflector body that, for a 120-volt input, shall produce 190 kW/m^2 of radiant flux in front of the quartz window that covers the lamps.

4.2.1.1 The emitter of each lamp shall be a 127 mm long tungsten filament in an argon atmosphere enclosed in a 9.5 mm outer-diameter clear quartz tube.

4.2.1.2 The emitter shall operate at a minimum of 2475 K for a 120-volt input, to produce a spectral energy peak at 1.15 microns.

4.2.2 Power Controller.

4.2.2.1 The power controller shall maintain the output voltage required by the heater array despite variations in the line voltage and load impedance, through the use of phase angle power control to match the hot/cold resistance characteristics of the tungsten-quartz lamps.

4.2.2.2 The controller also shall incorporate average voltage feedback to linearize the relationship between the voltage set by the operator and the output voltage to the lamps.

4.3 Load Cell System.

4.3.1 The load cell system, shown in Figure 4.3.1(a) and Figure 4.3.1(b), shall consist of a load cell, which shall have an accuracy of 0.1 g and a measuring range of 0 g to 1000 g; a 6.35 mm diameter stainless steel shaft at least 330 mm long resting on the load cell support point; a 100 mm diameter, 1.5 mm thick aluminum load platform connected to the upper end of the stainless steel shaft by a collar; and two low-friction, ball-bushing bearings that guide the shaft as it passes through the top and bottom, respectively, of the air distribution chamber.

4.3.2* The stainless steel shaft shall incorporate, at the lower end, a threaded adjustment rod.

4.4 Ignition Pilot Flame. The ignition pilot shall consist of an ethylene–air (60–40 by volume) flame adjusted for a 10 mm length and anchored at the horizontal end of a 50 mm long, 6.35 mm outer diameter (O.D.), 4.70 mm inner diameter (I.D.), stainless steel tube.

4.4.1 The horizontal section of the tube shall contain a four-hole ceramic insert to produce a stable flame and prevent flashback.

4.4.2 The pilot flame tube shall be able to be rotated and elevated to position the horizontal flame at specified locations near the specimen, as shown in Figure 4.3.1(a) and Figure 4.3.1(b).

4.5 Ignition Timer. The ignition timer for measuring time to sustained flaming shall be capable of recording elapsed time to the nearest tenth of 1 second and have an accuracy of better than 1 second in 1 hour.

Copyright National Fire Protection Association
Provided by IHS under license with NFPA
No reproduction or networking permitted without license from IHS
Not for Resale

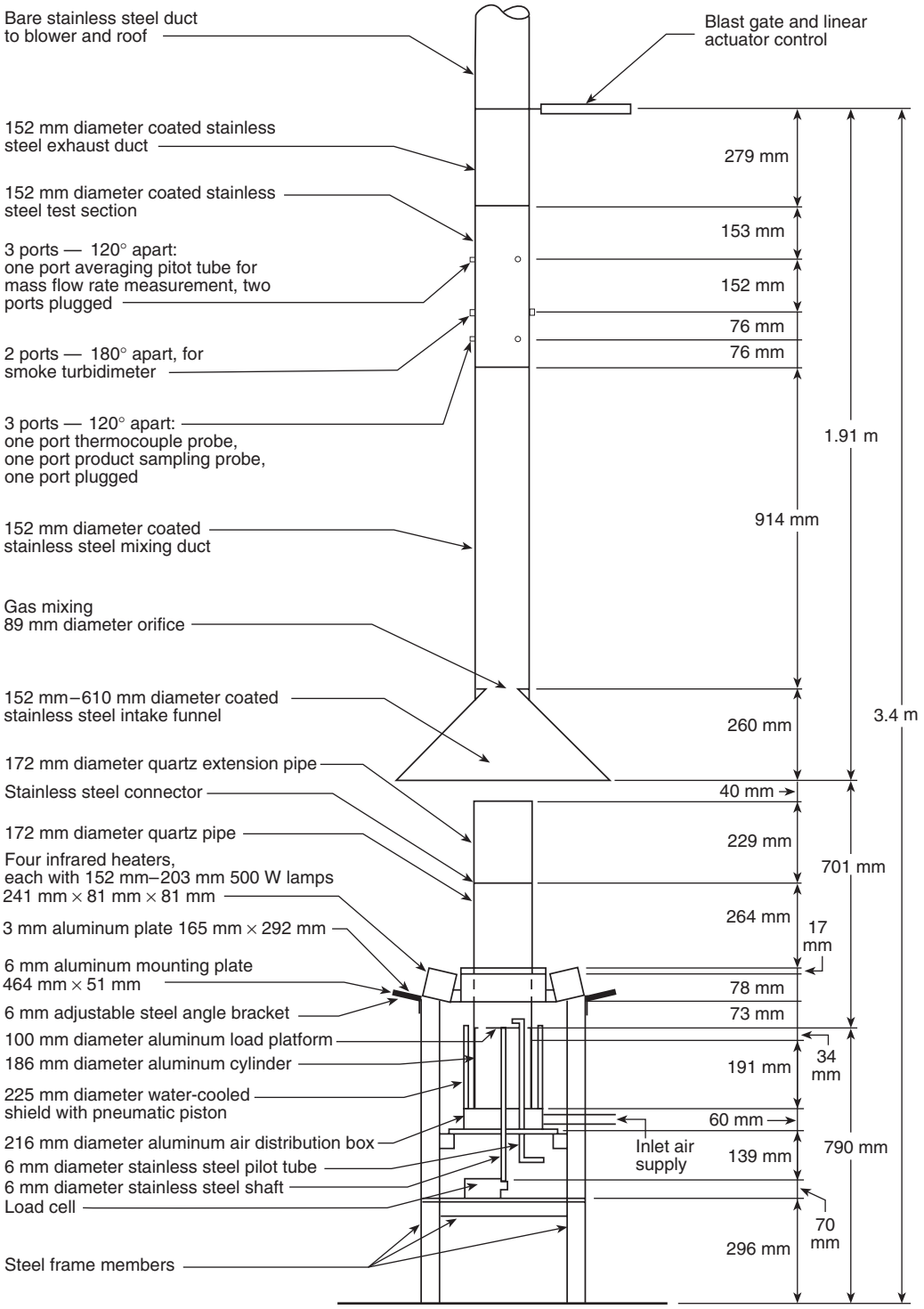

FIGURE 4.1.2 Main View of Apparatus.

Copyright National Fire Protection Association
Provided by IHS under license with NFPA
No reproduction or networking permitted without license from IHS
Not for Resale

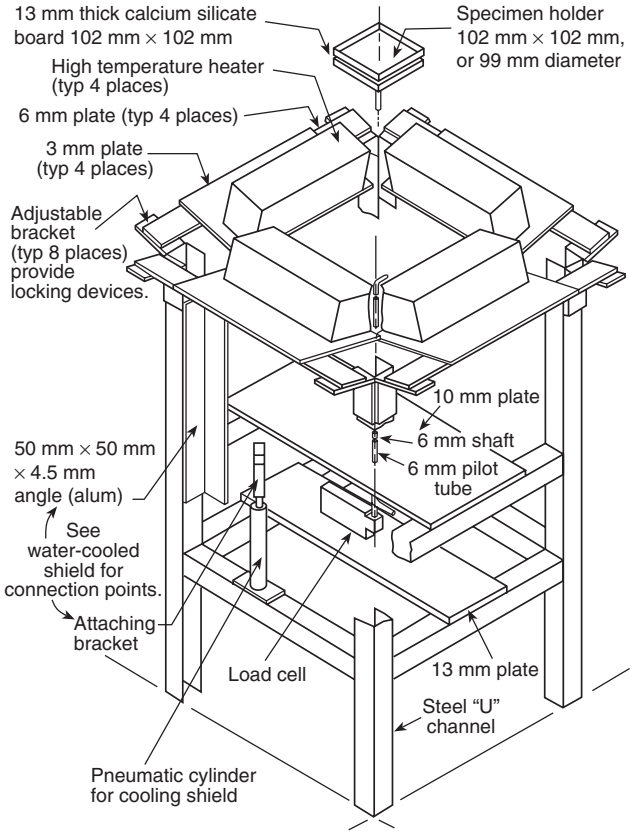

FIGURE 4.3.1(a) Exploded View of Specimen Mounting.

4.6 Gas Analysis System.

4.6.1 The gas-sampling arrangement, as shown in Figure 4.6.1, shall consist of a sampling probe in the test section duct, a plastic filter with a pore size of 5 microns to 6 microns to prevent entry of soot, a condenser operating at temperatures in the range of 5°C to 0°C to remove liquids, a tube containing an indicating desiccant 10–20 mesh in size to remove moisture, a cartridge filter, a sampling pump that transports the flow through the sampling line, and a system flowmeter and manifolds to direct the flow to individual CO, CO_2, O_2, and hydrocarbon gas analyzers.

4.6.1.1 The sampling probe, made of 6.35 mm (0.25 in.) O.D. stainless steel tubing inserted through a test section port, shall be positioned so that the open end of the tube is at the center of the test section.

4.6.1.2 The sampling probe shall be connected to a tee fitting that allows either sample or calibration gas to flow to the analyzer and the excess to waste.

4.6.2 The carbon dioxide analyzer shall permit measurements from 0 ppm to 15,000 ppm, and the carbon monoxide analyzer shall permit measurements from 0 ppm to 500 ppm concentration levels.

4.6.2.1 Drift shall be not more than ± 1 percent of full scale over a 24-hour period.

4.6.2.2 Precision shall be 1 percent of full scale, and the 10 percent to 90 percent of full-scale response time shall be 1 second or less.

4.6.3 The inlet-air oxygen analyzer shall have a 10 percent to 90 percent of full-scale response time of 1 second or less, an accuracy of 1 percent of full scale, a drift of not more than ± 50 ppm O_2 over one-half hour, and a range of 0 percent to 50 percent.

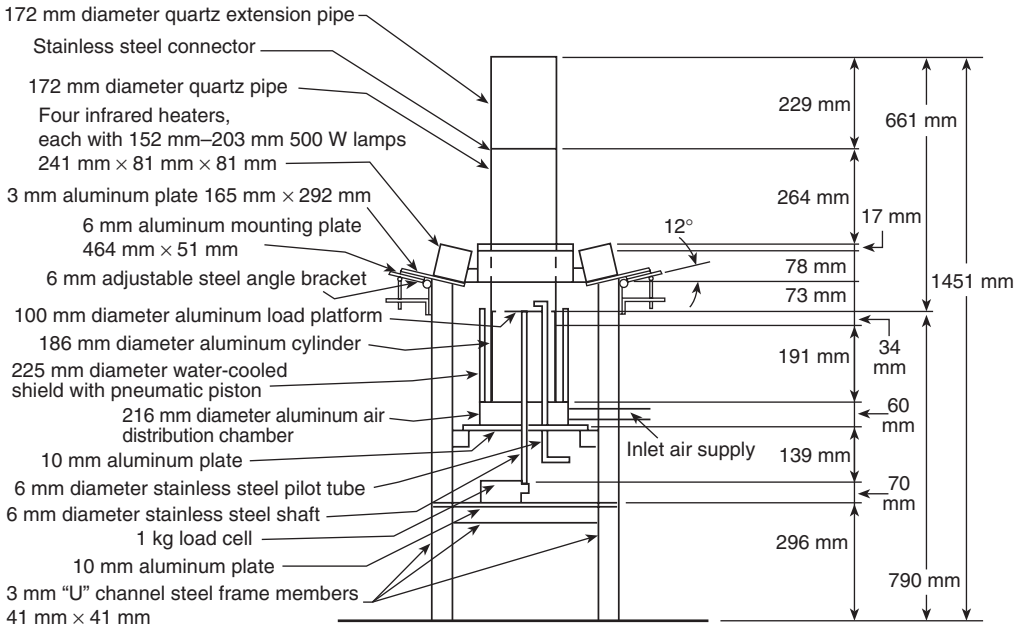

FIGURE 4.3.1(b) Main View of Specimen Mounting.

Copyright National Fire Protection Association
Provided by IHS under license with NFPA
No reproduction or networking permitted without license from IHS
Not for Resale

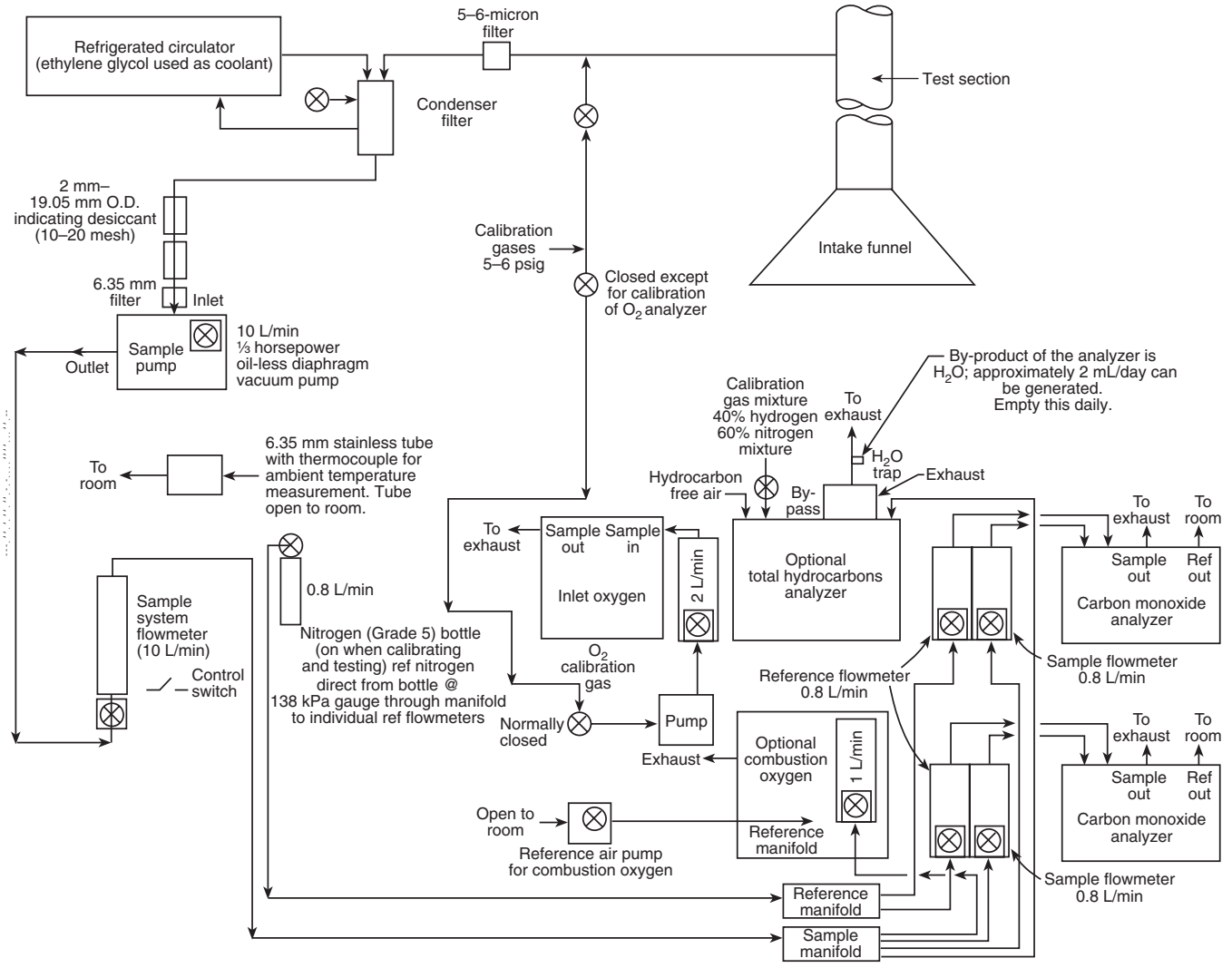

FIGURE 4.6.1 Flow Diagram of Gas-Sampling System.

4.6.4 An additional oxygen analyzer shall be permitted to measure the depletion of oxygen in the combustion products.

4.6.4.1 This analyzer shall have the same specifications as the inlet-air analyzer but shall have a concentration range of 19 percent to 21 percent.

4.6.4.2 A hydrocarbon gas analyzer shall be permitted to determine the total gaseous hydrocarbon concentration in the combustion products.

4.6.4.3 This analyzer shall employ the flame ionization method of detection, have a 10 percent to 90 percent of full-scale response time of 1 second or less, and have multiple ranges to permit measurements from a full scale of 10 ppm methane equivalent to 10,000 ppm.

4.7 Combustion Air Distribution System.

4.7.1* The aluminum air distribution chamber, shown in Figure 4.7.1, shall contain eight discharge tubes arranged in a circle of 165 mm I.D.

4.7.1.1 Each tube shall be aluminum and built to distribute inlet gases to three sets of screens, consisting of stainless steel woven wire cloth of 10, 20, and 30 mesh from bottom to top, respectively, for producing a uniform airflow.

4.7.2 The air supply pipes, shown in Figure 4.7.2, shall consist of an aluminum cylinder extending from the air distribution chamber up to the load platform.

4.7.2.1 This cylinder shall contain a step to support a quartz pipe.

4.7.2.2 Above the load platform elevation, the quartz pipe shall supply oxidant to the specimen flame while allowing radiant energy from the infrared heating system to reach the specimen surface.

4.7.2.3 The aluminum support cylinder shall be rigidly attached to the distribution chamber, with the quartz pipe removable.

Copyright National Fire Protection Association
Provided by IHS under license with NFPA
No reproduction or networking permitted without license from IHS
Not for Resale

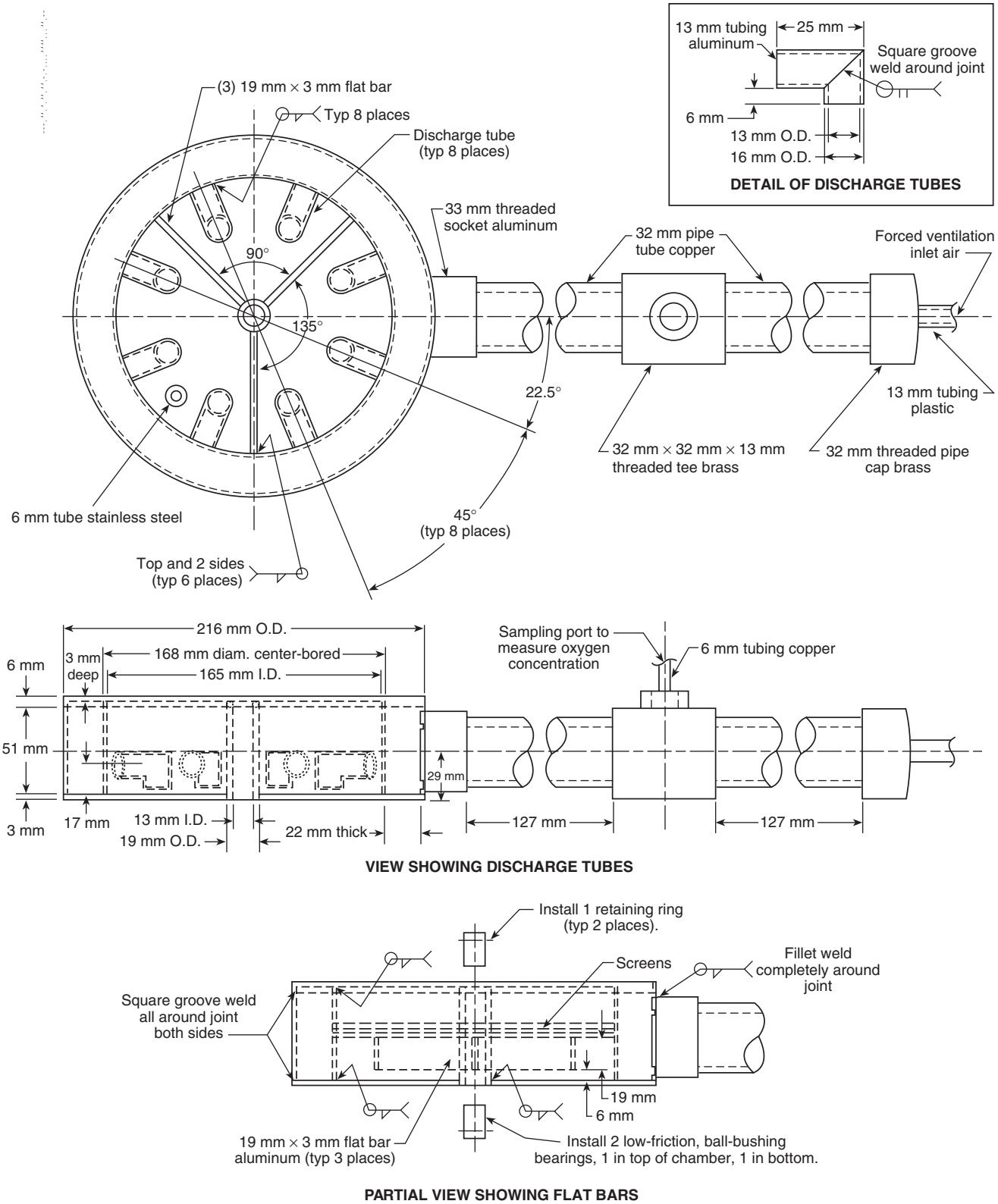

FIGURE 4.7.1 Air Distribution Chamber.

Copyright National Fire Protection Association
Provided by IHS under license with NFPA
No reproduction or networking permitted without license from IHS
Not for Resale

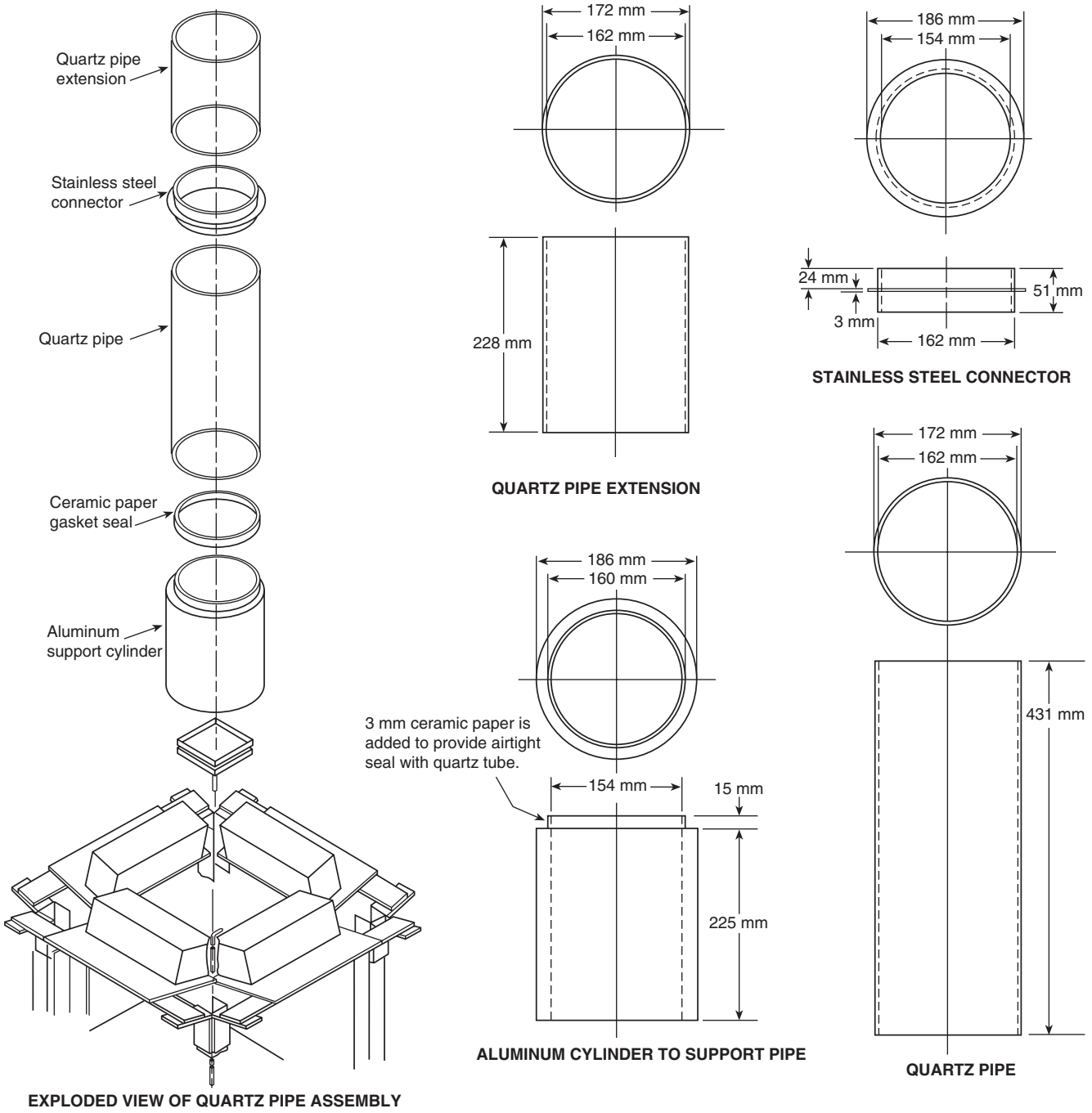

FIGURE 4.7.2 Quartz Pipe Assembly.

4.8 Water-Cooled Shield. The water-cooled shield, shown in Figure 4.8, shall prevent the specimen from being exposed to the infrared heaters during the 1-minute heater stabilization period.

4.8.1 The shield shall consist of two aluminum cylinders welded together with an inlet and outlet for water circulation.

4.8.2 An electrically actuated pneumatic piston shall raise the shield to cover the specimen during test preparation and shall lower the shield within 1 second to expose the specimen at the start of a test.

4.9 Exhaust System. An exhaust system shall be provided in accordance with 4.9.1 or 4.9.2.

Copyright National Fire Protection Association
Provided by IHS under license with NFPA
No reproduction or networking permitted without license from IHS
Not for Resale

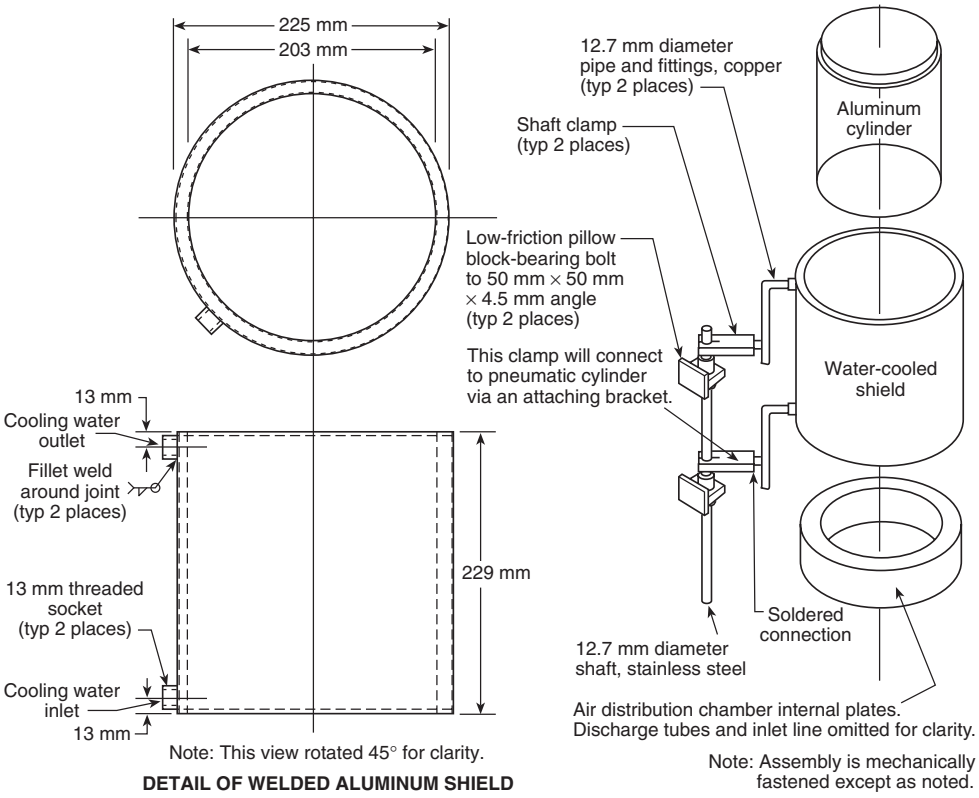

FIGURE 4.8 Water-Cooled Shield.

4.9.1 Option 1.

4.9.1.1 The exhaust system shall consist of the following main components: an intake funnel, as shown in Figure 4.9.1.1(a) and Figure 4.9.1.1(b); a mixing duct, as shown in Figure 4.9.1.1(c) and Figure 4.9.1.1(d); a test section, as shown in Figure 4.9.1.1(e); an exhaust duct, as shown in Figure 4.1.2; and a high-temperature blower to draw gases through the intake funnel, mixing duct, test section, and exhaust duct at flow rates from 0.1 m^3/sec to 0.3 m^3/sec.

4.9.1.2 The intake funnel, mixing duct, test section, and exhaust duct shall be coated internally with a fluorinated polyethylene-polypropylene (FEP) resin enamel and finish layers over a compatible primer, to form a three-layer coating that can withstand temperatures of at least 200°C.

4.9.2* Option 2.

4.9.2.1 The design for the alternative exhaust system shall be as shown in Figure 4.9.2.1.

4.9.2.2 The alternative exhaust system shall have the same type components as those specified in 4.9.1.1 except that the blower shall have a flow capability of 0.1 m^3/sec to 0.2 m^3/sec (212 cfm to 424 cfm), and the mixing orifice shall be 1.6 mm thick and 91.5 mm in diameter instead of that shown in Figure 4.9.1.1(c).

4.9.2.3 The alternative exhaust system shall be operated at a flow rate of 0.15 ± 0.015 m^3/sec (318 ± 32 cfm).

4.10 Test Section Instruments.

4.10.1 Thermocouple Probe.

4.10.1.1 The thermocouple probe shall be inserted through a test section port and positioned so that the exposed, type K measurement bead is at the center of the test section, at the axial position of the gas-sampling port.

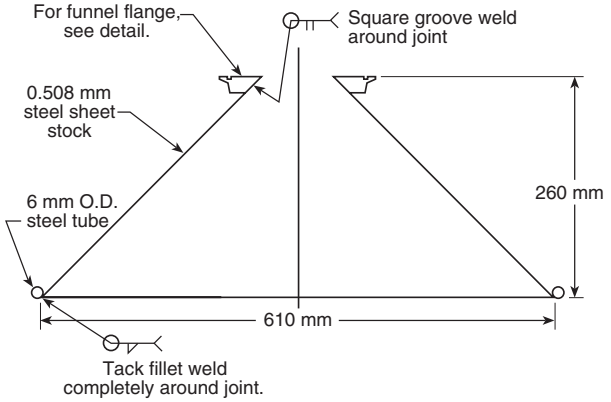

Notes:
(1) Inside of funnel is to be coated with FEP after welding.
(2) Coat thickness is 0.5 mm.

FIGURE 4.9.1.1(a) Intake Funnel.

Copyright National Fire Protection Association
Provided by IHS under license with NFPA
No reproduction or networking permitted without license from IHS
Not for Resale

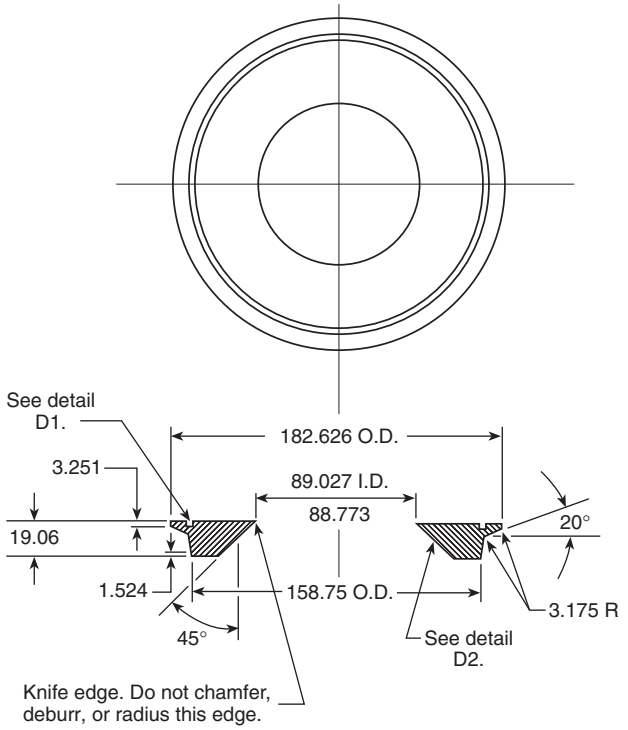

Note: All dimensions in mm unless noted

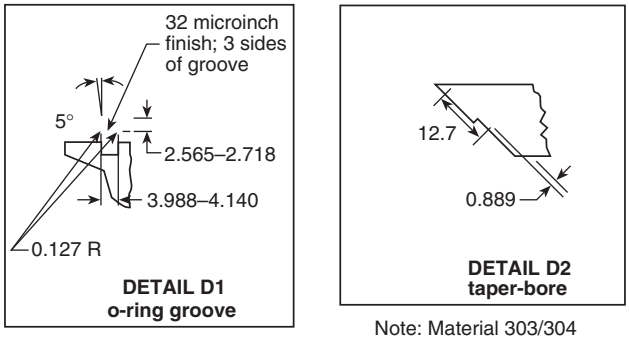

Note: Material 303/304 stainless steel

FIGURE 4.9.1.1(b) Funnel Flange.

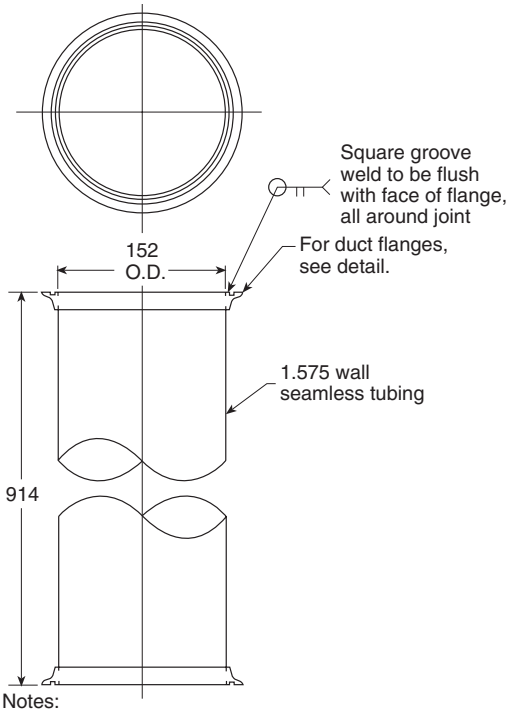

Notes:
(1) All dimensions in mm unless noted
(2) Flanges to be square with tube
(3) Inside of duct to be coated with FEP after welding
(4) Material 304 stainless steel

FIGURE 4.9.1.1(c) Mixing Duct.

4.10.1.2 The thermocouple probe shall be fabricated of wire no larger than 0.254 mm in diameter for measurement of gas temperature, with a time response in the specified exhaust flow of no more than 1 second and an accuracy of 1°C.

4.10.2* Averaging Pitot Probe and Pressure Transducer. The averaging pitot probe shall be inserted through a test section port 220 mm to 230 mm downstream of the thermocouple port and shall measure the mass flow rate of the gas stream by using at least four sets of flow-sensing openings.

4.10.2.1 One set of openings shall face upstream, and the second set shall face downstream and be designed for compatibility with the test section diameter.

4.10.2.2 The differential pressure generated by the probe shall be measured with an electronic pressure transducer (electronic manometer).

4.10.3* Smoke-Measuring Unit.

4.10.3.1 A laser smoke-measuring system, as shown in Figure 4.10.3.1, shall be used to measure the smoke extinction coefficient; Figure 4.10.3.1 identifies the laser smoke-measuring system and illustrates a cross-section of the test section duct with an optical path length of 0.152 m.

4.10.3.2 The smoke-measuring system shall be installed in the test section duct 230 mm downstream of the gas-sampling port.

4.10.3.3 The smoke-measuring system shall contain the following:

(1) A 0.5 mW nominal power helium–neon laser that emits light energy at the red wavelength of 0.6328 μm
(2) Two photodiodes as main and compensating detectors
(3) Associated electronics including amplifier and power supply

4.10.3.4 The laser smoke-measuring system shall be fitted to a rigid cradle that serves as an optical bench.

4.10.3.5 The laser system shall be aligned so that the light falls on the photodetector system, which has two signal outputs typically in the range of 0 volts to 2 volts.

4.11 Heat Flux Gauge. The infrared heating system shall be calibrated by using a Gardon-type total heat flux gauge having a nominal range of 0 kW/m^2 to 100 kW/m^2 and a flat, 6 mm to 8 mm diameter sensing surface coated with a durable, flat-black finish.

Copyright National Fire Protection Association
Provided by IHS under license with NFPA
No reproduction or networking permitted without license from IHS
Not for Resale

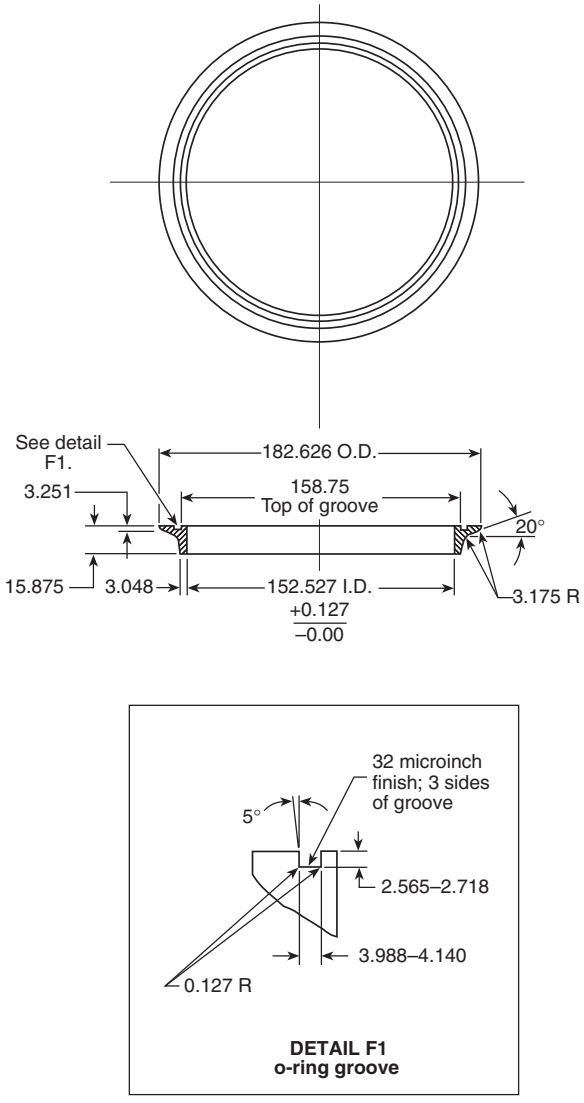

Notes:
(1) All dimensions are in mm unless noted.
(2) Material 304 is stainless steel.
(3) A matching pair consists of 1 flange with o-ring groove and 1 flange without.

FIGURE 4.9.1.1(d) Duct Flanges.

4.11.1 The body of the gauge shall be cooled by water above the dew point of the gauge environment.

4.11.2 The gauge shall be rugged and maintain an accuracy of ±3 percent and a repeatability within 0.5 percent between calibrations.

4.11.3 Whenever the infrared heaters are calibrated, the calibration of the heat flux gauge shall be checked through the use of a black-body oven-calibration facility that compares the gauge response to that of an optical pyrometer with a NIST-traceable calibration, or through the use of a facility that compares the gauge output to that of a reference standard.

4.12 Digital Data Collection. The digital data collection system shall be capable of recording the output from the CO, CO_2, hydrocarbon gas, O_2 combustion, and O_2 inlet air analyzers, the load cell, the test section instruments, and the electronic pressure transducer at 1-second intervals.

4.12.1 The data for gas concentrations shall be time-shifted to account for delays within the gas-sampling lines and respective instrument response times.

4.12.2 The data collection system shall have an accuracy corresponding to at least ± 1°C for temperature measurement and ± 0.01 percent of full-scale instrument output for all other channels.

4.12.3 The system shall be capable of recording data for at least 1 hour at 1-second intervals.

Copyright National Fire Protection Association
Provided by IHS under license with NFPA
No reproduction or networking permitted without license from IHS
Not for Resale

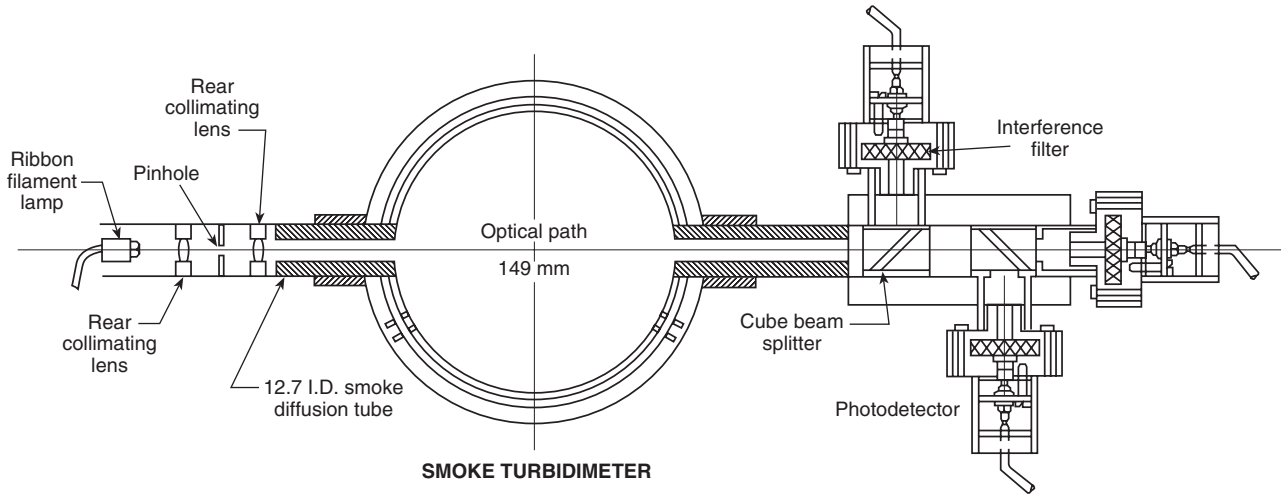

SMOKE TURBIDIMETER

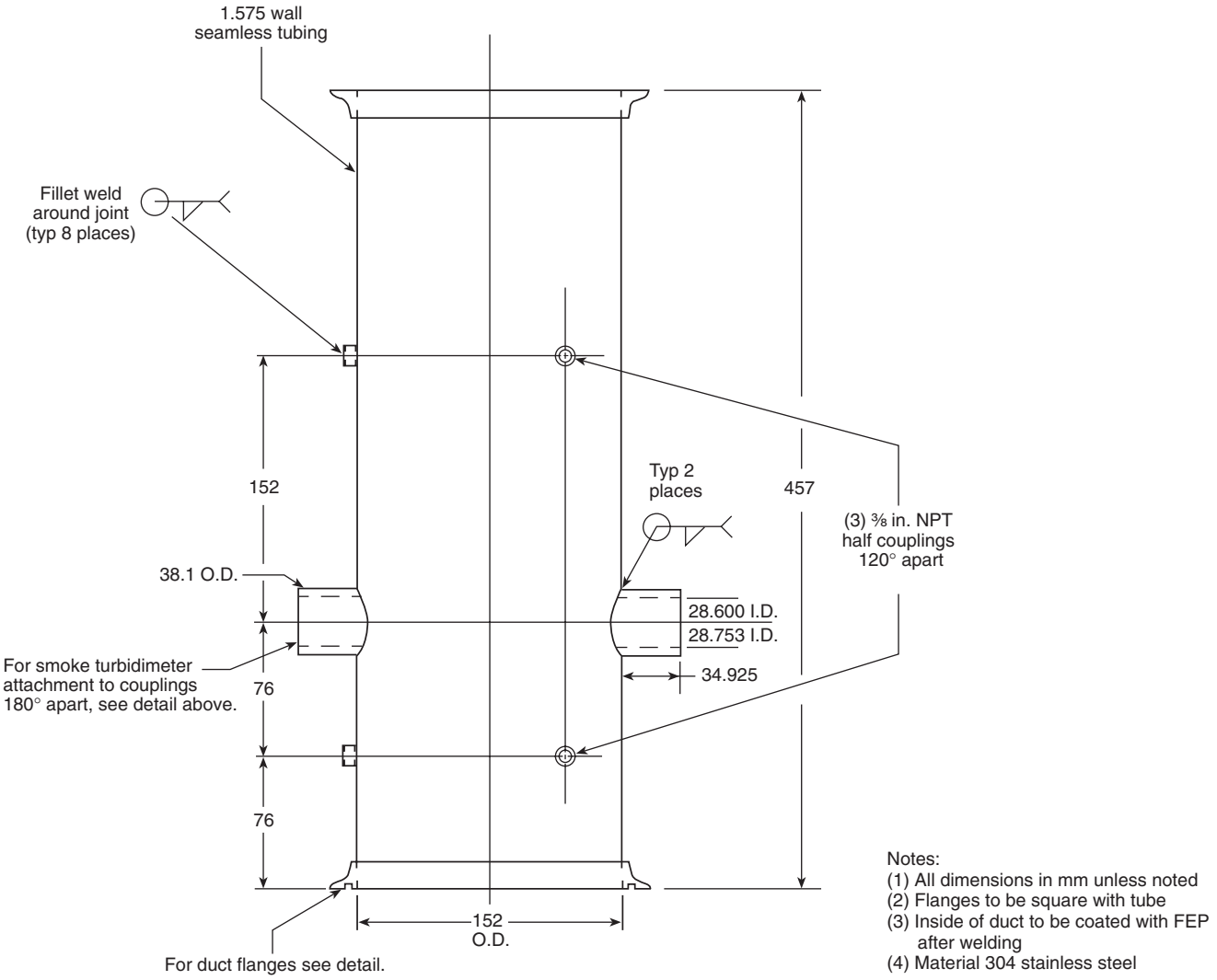

FIGURE 4.9.1.1(e) Test Section.

Copyright National Fire Protection Association
Provided by IHS under license with NFPA
No reproduction or networking permitted without license from IHS
Not for Resale

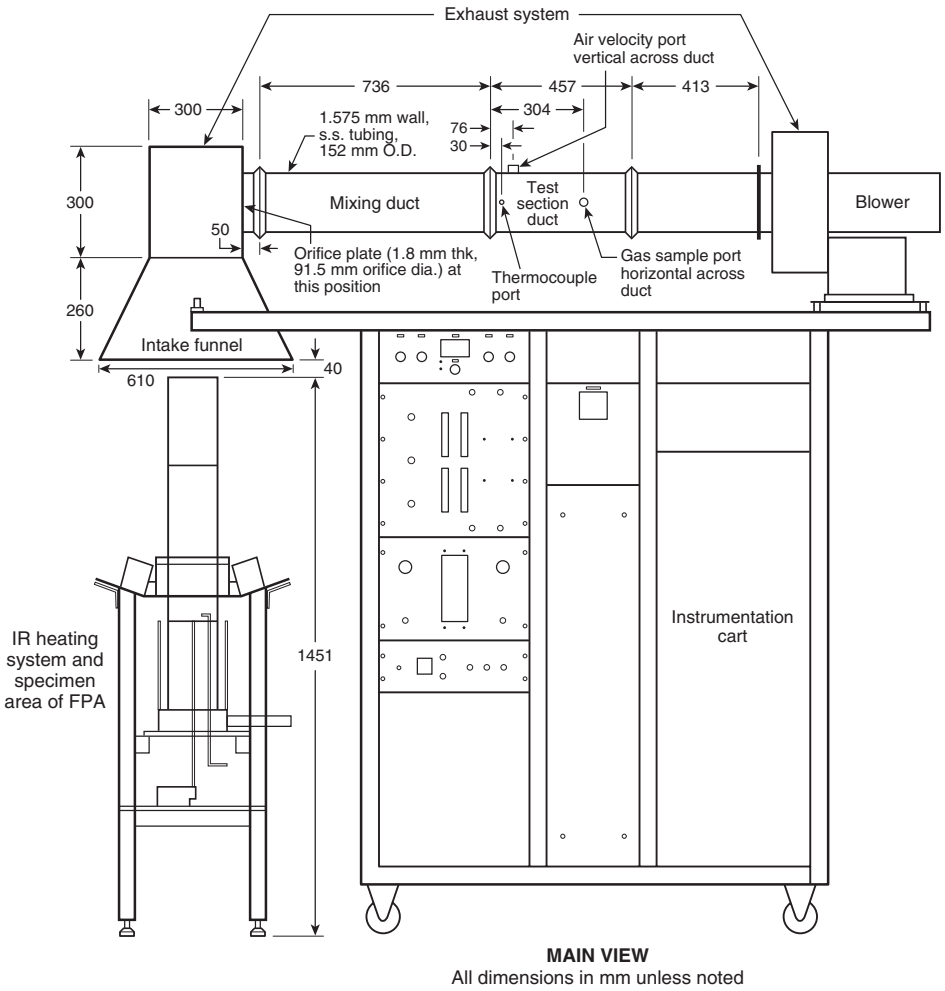

FIGURE 4.9.2.1 FPA with Horizontal Exhaust Configuration.

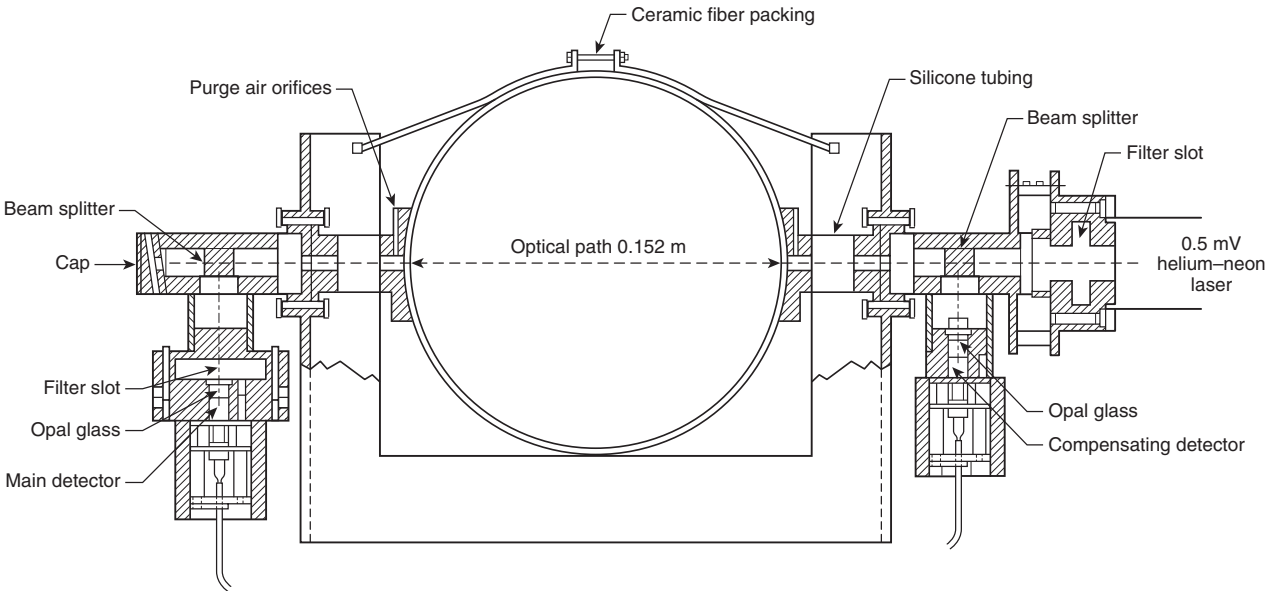

FIGURE 4.10.3.1 Laser Smoke-Measuring Unit.

Copyright National Fire Protection Association
Provided by IHS under license with NFPA
No reproduction or networking permitted without license from IHS
Not for Resale

Chapter 5 Calibration of Equipment

5.1 Radiant Flux Heater.

5.1.1 Infrared heaters shall be calibrated at the start of the test day.

5.1.1.1 The quartz windows, lamps, and back reflective surfaces of the heaters shall be cleaned of any impurity buildup or scratches.

5.1.1.2 The sensing surface of the heat flux gauge shall be positioned to be horizontal, at a location equivalent to the center of the top surface of a horizontal specimen.

5.1.1.3 Calibrations shall be performed, both with and without the quartz pipe in position, by recording infrared heater voltage settings and corresponding heat flux gauge outputs that cover the entire range of flux levels for planned tests.

5.1.2 At least annually, the position of the infrared heaters shall be checked by setting the heater voltage at 90 percent of the maximum value, positioning the heat flux gauge sensing surface to be horizontal, and measuring the heat flux at each of five locations, corresponding to each corner and the center of a square, horizontal specimen, at an elevation equivalent to that of the specimen top surface.

5.1.2.1 The position of each infrared heater shall be adjusted symmetrically, and the heat flux measurements repeated until there is at most a 5 percent mean deviation of the five readings from the average value.

5.1.2.2 Then, the heat flux gauge shall be positioned, with the sensing surface horizontal, to locations equivalent to the vertical axis at the center of a square, horizontal specimen, and the heat flux measured at elevations of 10 mm and 20 mm above and below that equivalent to the specimen top surface.

5.1.2.3 The heat flux at these four elevations shall be checked to ensure that it is within 5 percent of the value at the elevation of the specimen top surface.

5.2 Gas Analysis Equipment.

5.2.1 The gas analysis equipment shall be calibrated before the first combustion or fire propagation test of the day.

5.2.2 Carbon dioxide and carbon monoxide analyzers shall be calibrated for measurement of the combustion gases by establishing a downscale/zero calibration point and an upscale/span calibration point.

5.2.2.1 The upscale calibration shall be performed with a "span gas" at the upper end of the range that will be used during actual sample analysis and with a "zero gas" for the downscale calibration point at the lower end of the analyzer range.

5.2.2.2 Nitrogen shall be used as the "zero gas" reference source by turning on a cylinder of Grade 5 nitrogen.

5.2.3 The oxygen analyzer for the measurement of inlet oxygen concentration and the optional oxygen analyzer for the measurement of combustion gases shall be calibrated by establishing a downscale/zero calibration point and an upscale/span calibration point.

5.2.3.1 The upscale calibration shall be performed with a "span gas" at the upper end of the range that will be used during actual sample analysis and with a "zero gas" for the downscale calibration point at the lower end of the analyzer range.

5.2.3.2 Grade 5 nitrogen shall be used as the "zero gas" reference source.

5.2.3.3 The optional combustion gas oxygen analyzer shall be checked to ensure that the span (upper range) setting does not change by more than 0.1 percent after the first zero gas (downscale) setting is performed.

5.2.3.4 If the setting does change by more than this amount, then the calibration procedure shall be repeated.

5.2.4 Optional Hydrocarbon Gas Analyzer.

5.2.4.1 The optional hydrocarbon gas analyzer shall be calibrated at the downscale point by using Grade 5 nitrogen as the "zero gas."

5.2.4.2 Methane at a concentration that matches the operating range of the analyzer shall be used as the "span gas" for the upscale calibration.

5.3 Load Cell. The load cell shall be calibrated each time it is used.

5.3.1 The output voltage shall be set to zero by adjusting the tare, with the appropriate empty specimen holder in position.

5.3.2 A NIST-traceable weight corresponding to the weight of the specimen to be tested shall then be placed on the empty holder, and the output voltage shall be measured.

5.3.3 Linearity shall be checked by repeating this procedure with three other NIST-traceable weights so as to cover the entire specimen weight range.

5.4 Heat Release Calibration.

5.4.1 Measurement Process.

5.4.1.1 The heat release rate measurement process shall be calibrated at least monthly to ensure the proper functioning of the fire propagation apparatus.

5.4.1.2* The measured effective heat of combustion of acetone shall be checked to ensure that it is within 5 percent of the reference value of 27,900 kJ/kg and that the measured total delay (or lag) time of the gas analyzers is less than 15 seconds.

5.4.2 The infrared heaters or the pilot shall not be used.

5.4.3 All other required calibration procedures described in Section 5.4 shall be performed.

5.4.4 Inlet airflow shall be checked to ensure that it is set at 200 ± 20 L/min.

5.4.5 The data acquisition program shall be started.

5.4.6 Acetone in the amount of 100 mL shall be placed in a 97 mm diameter heat-resistant glass specimen dish on the load cell.

5.4.7 The acetone shall be ignited using a match 30 seconds after the start of data acquisition.

5.4.8 Data acquisition shall be ended 2 minutes after the end of visible flaming.

5.4.9 The effective heat of combustion shall be determined in accordance with the calculation procedure in Section 8.4.

Copyright National Fire Protection Association
Provided by IHS under license with NFPA
No reproduction or networking permitted without license from IHS
Not for Resale

5.4.10 The delay time for the gas analyzers shall be determined by computing the difference between the time when the test section duct gas temperature reaches 50 percent of its steady-state value and the time when the reading of each analyzer reaches 50 percent of its steady-state value.

Chapter 6 Test Specimens

6.1 Specimen Holders. Four types of specimen holders shall be permitted: horizontal square; horizontal circular, as shown in Figure 6.1(a); vertical, as shown in Figure 6.1(b); and vertical cable, as shown in Figure 6.1(c).

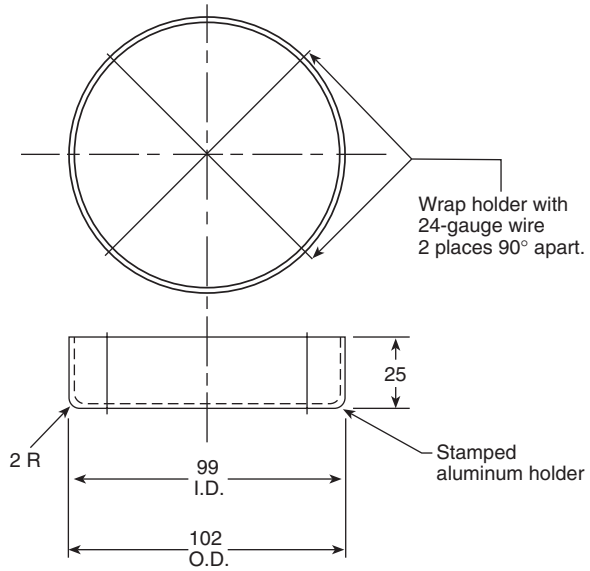

FIGURE 6.1(a) Horizontal Circular Specimen Holder.

6.1.1 The horizontal square holder shall consist of two layers of "2 mil" (0.05 mm thickness) aluminum foil molded to the sides and bottom of a square specimen.

6.1.2 The horizontal circular holder shall be a 99 mm diameter aluminum dish.

6.1.3 The vertical specimen holder shall be a 485 mm high × 133 mm wide ladder rack.

6.1.4 The vertical cable holder shall be 825 mm high, for supporting a cable specimen 810 mm long and up to 51 mm in diameter.

6.2 Conditioning. Specimens shall be conditioned, before surface preparation or testing, to moisture equilibrium at a temperature of 23 ± 3°C and a relative humidity of 50 ± 5 percent for 24 hours.

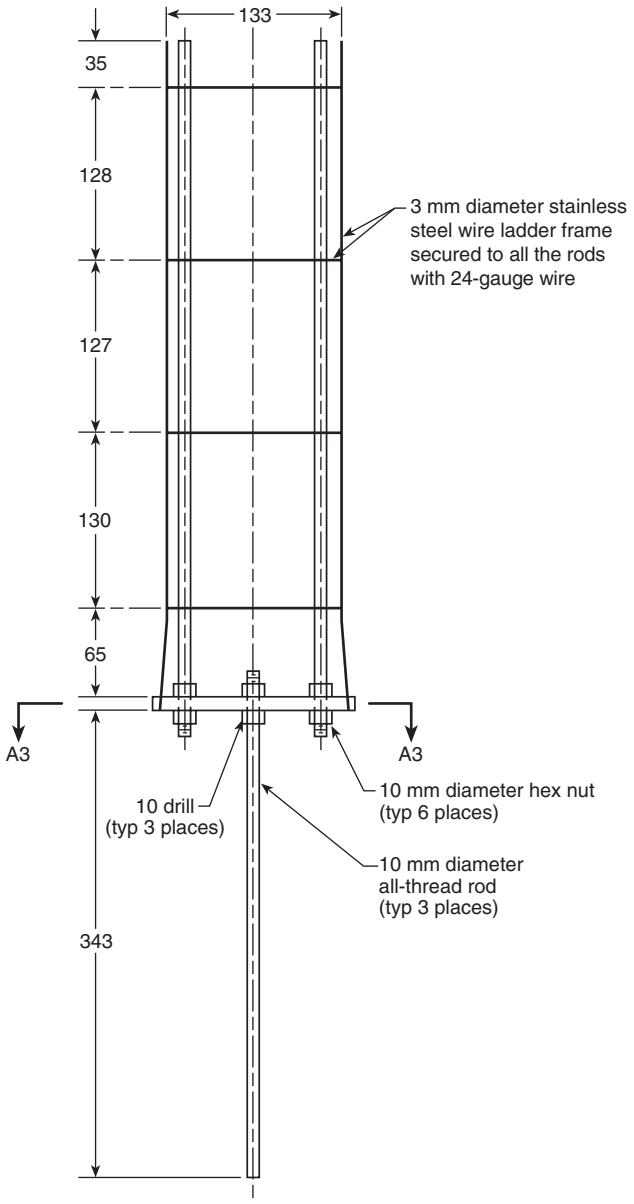

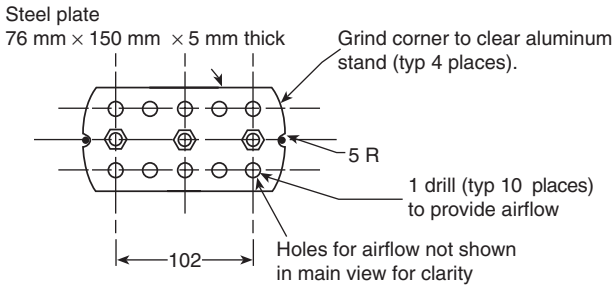

SECTION A3–A3

Notes:
(1) All dimensions are in mm unless noted.
(2) Flat specimen is secured to the ladder frame using 24-gauge wire.

FIGURE 6.1(b) Vertical Specimen Holder.

Copyright National Fire Protection Association
Provided by IHS under license with NFPA
No reproduction or networking permitted without license from IHS
Not for Resale

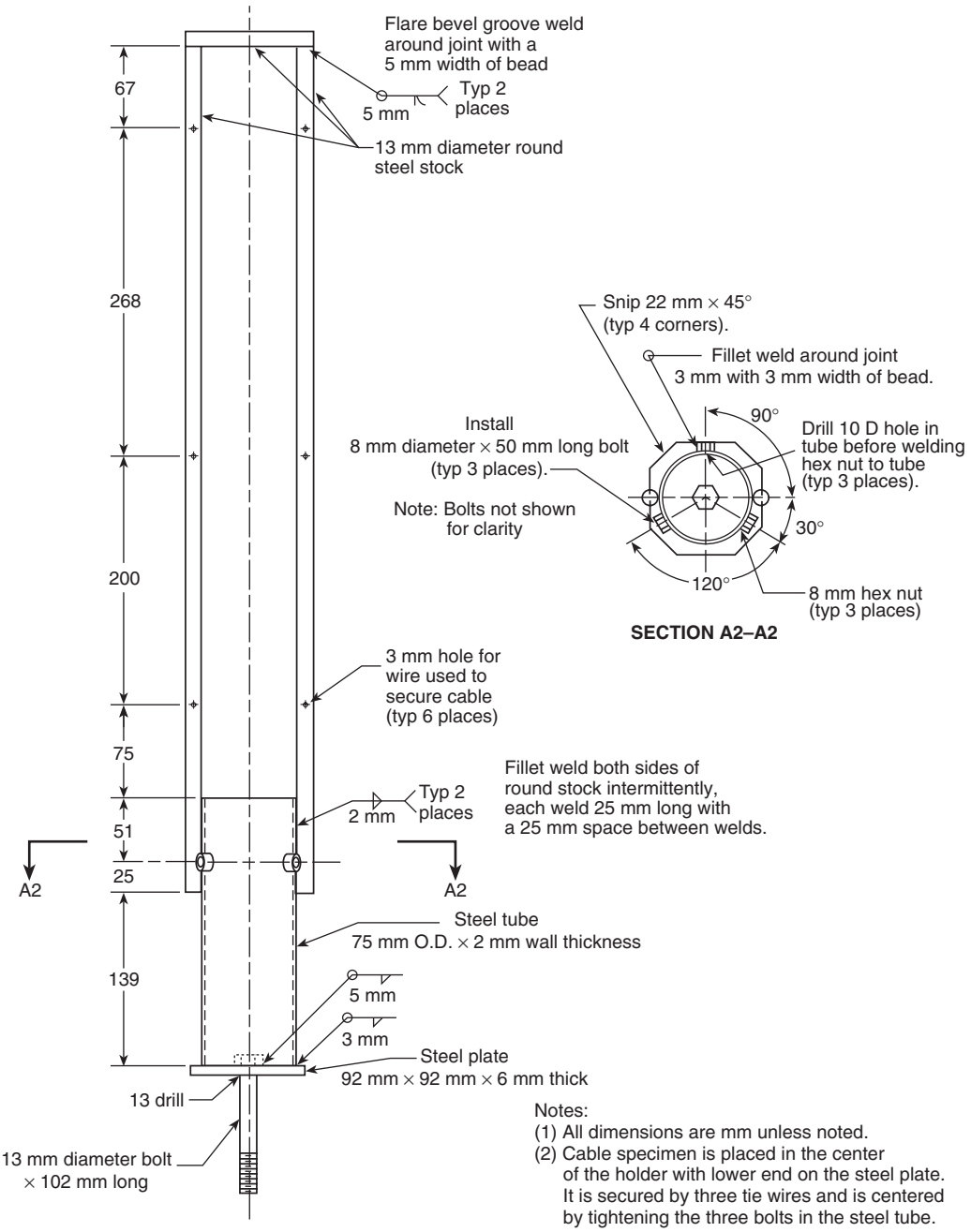

FIGURE 6.1(c) Cable Specimen Holder.

6.3 Specimen Size and Preparation.

6.3.1* Ignition and Combustion Tests of Horizontal Specimens. Specimens for the horizontal square holder shall be cut from planar materials or products to be 101.6 mm × 101.6 mm in area.

6.3.1.1 Square specimens shall have a thickness of no less than 3 mm and no more than 25.4 mm.

6.3.1.2 For materials and products having a thickness greater than 25.4 mm, the unexposed surface shall be cut to reduce the thickness to 25.4 mm.

6.3.1.3 When the ignition test is paired with a fire propagation test, the specimen thickness shall be identical in both tests.

6.3.1.4 Square specimens shall be used with the horizontal square holder.

6.3.1.5 Granular specimens shall be used with the horizontal circular holder by filling the aluminum dish.

6.3.1.6 Cable specimens shall be used with the horizontal circular holder by cutting them to cover the center and at least 20 mm on each side of the center of the aluminum dish.

Copyright National Fire Protection Association
Provided by IHS under license with NFPA
No reproduction or networking permitted without license from IHS
Not for Resale

6.3.1.7 The exposed top surface of square, granular, and cable specimens shall be sprayed with a single coat of flat black paint that is designed to withstand temperatures up to 540 ± 10°C.

6.3.1.8 The paint coating shall be cured by conditioning the specimen at a temperature of 23 ± 3°C and a relative humidity of 50 ± 5 percent for 48 hours.

6.3.1.9 Before testing, the holder containing the specimen shall be placed on a 13 mm thick calcium silicate board having a density of 700 kg/m^3 to 750 kg/m^3, a thermal conductivity of 0.11 W/mK to 0.13 W/mK, and the same dimensions as the holder, as shown in Figure 6.1(a).

6.3.2 Fire Propagation Test of Vertical Specimens. Vertical specimens shall be cut from planar materials or products to be 101.6 mm in width and 305 mm in height.

6.3.2.1 Vertical specimens shall have a thickness of no less than 3 mm and no more than 13 mm.

6.3.2.2 For materials and products having a thickness greater than 13 mm, the unexposed surface shall be cut to reduce the thickness to 13 mm.

6.3.2.3 When the fire propagation test is paired with an ignition test, the specimen thickness shall be identical in both tests.

6.3.2.4 Ceramic paper having a density 190 kg/m^3 to 200 kg/m^3 and a thickness of 3.2 mm shall be placed to cover the sides and back surface of the vertical specimen.

6.3.2.5 Two layers of "2 mil" (0.05 mm) thickness aluminum foil shall then be molded to the ceramic paper on the sides and back surface of the vertical specimen, thereby leaving the front surface of the specimen exposed for testing.

6.3.2.6 Following this preparation, the bottom of the vertical specimen shall be placed on the metal baseplate of the vertical holder shown in Figure 6.1(b), with the covered (back) surface of the specimen against the ladder rack.

6.3.2.7 To secure the specimen to the vertical specimen holder, 24 gauge nickel–chromium wire shall be wrapped three turns around the vertical specimen, the ladder rack, and the threaded rods, at distances of 100 mm and 200 mm from the bottom of the specimen.

6.3.2.8 Cable specimens shall be mounted as shown in Figure 6.1(c).

6.4 Mounting Methods. The exact mounting and retaining methods used shall be specified in the test report if different from the techniques in Section 6.3.

Chapter 7 Test Procedure

7.1 Procedure 1: Ignition Test. The ignition test shall be performed to determine the TRP, and the CHF of a material, through measurement of the ignition time over a range of external heat fluxes.

7.1.1 Nitrogen for extinguishing flames shall be ready to flow at 100 ± 10 L/min, and cylinders of compressed ethylene and air shall be available to give the specified pilot flame when needed.

7.1.2 The 13 mm thick calcium silicate board supporting the appropriate horizontal specimen holder shall be centered on the aluminum load platform with no quartz pipe in place, to ensure natural airflow.

7.1.3 The exhaust blower shall be turned on.

7.1.4 The pilot flame shall be ignited and adjusted for a 10 mm flame length.

7.1.5 The lighted pilot flame shall be moved to a position 10 mm above the specimen surface and 10 mm radially in from the perimeter of the specimen.

7.1.6 The air and water supplies shall be turned on to cool the infrared heaters.

7.1.7 The water-cooled shield surrounding the specimen holder shall be raised to prevent specimen exposure to external heat flux.

7.1.8 The infrared heater voltage shall be set to produce a 30 kW/m^2 exposure on the specimen surface, and the infrared heater shall be allowed to stabilize for 1 minute.

7.1.9 The water-cooled shield shall be lowered to expose the sample to the external heat flux, and the ignition timer shall be started.

7.1.10 The time at the first appearance of vapors from the specimen shall be recorded, and the time to ignition shall be recorded as the time from exposure to the external heat flux until a sustained flame is established for at least a 4-second duration.

7.1.11 Nitrogen shall be introduced to extinguish flames.

7.1.12* The specimen shall be removed to a ventilated environment.

7.1.13 The procedures of 7.1.1 through 7.1.12 shall be repeated for infrared heater settings of 35 kW/m^2, 40 kW/m^2, 45 kW/m^2, 50 kW/m^2, 55 kW/m^2, and 60 kW/m^2.

7.1.14 If the specimen ignites at 30 kW/m^2 within 15 minutes, the same procedure shall be repeated at 25 kW/m^2, 20 kW/m^2, 15 kW/m^2, and 10 kW/m^2, in that order, until there is no ignition for 15 minutes.

7.2 Procedure 2: Combustion Test. The combustion test shall be conducted to determine the EHC and the y_s, and to measure the chemical and convective heat release rates $\dot{Q}_{chem}$ and $\dot{Q}_c$.

7.2.1 Gas-Sampling System.

7.2.1.1 The gas-sampling system shall be removing all water vapor and other condensable combustion products.

7.2.1.2 If the sampling system flowmeter indicates a flow of less than 10 L/min, then the sampling system filter elements shall be replaced.

7.2.2 Fresh indicating desiccant and a soot filter shall be installed in the gas-sampling line.

7.2.3 The flame in the hydrocarbon gas analyzer shall be ignited, and the flameout indicator on the front panel shall be checked to ensure that there is flame ignition.

7.2.4 Nitrogen for extinguishing flames shall be ready to flow at 100 ± 10 L/min, and cylinders of compressed ethylene and air shall be available to produce the specified pilot flame when needed.

7.2.5 Power.

7.2.5.1 The gas-sampling pump to oxygen, carbon monoxide, carbon dioxide, and hydrocarbon gas analyzers shall be turned on, and correct flow rates shall be set for each instrument.

Copyright National Fire Protection Association
Provided by IHS under license with NFPA
No reproduction or networking permitted without license from IHS
Not for Resale

7.2.5.2 Gas analyzers shall be powered on at all times to maintain constant internal temperatures.

7.2.6 The required calibration procedures shall be performed, as specified in Chapter 5.

7.2.7 The exhaust and air supply blowers servicing the apparatus shall be turned on.

7.2.8 The 13 mm thick calcium silicate board supporting the appropriate horizontal specimen holder shall be centered on the aluminum load platform.

7.2.9 The pilot flame shall be ignited and adjusted for a 10 mm flame length.

7.2.10 The lighted pilot flame shall be moved to a position 10 mm above the specimen surface and 10 mm radially in from the perimeter of the specimen.

7.2.11 The air and water supplies shall be turned on to cool the infrared heaters.

7.2.12 The quartz pipe shall be installed on the mounting step in the aluminum oxidant supply pipe.

7.2.13 The water-cooled shield surrounding the specimen holder shall be raised to prevent exposing the specimen to the external heat flux.

7.2.14 The inlet airflow shall be set at 200 ± 20 L/min and the exhaust flow rate set at 0.25 ± 0.025 m^3/sec.

7.2.15 The infrared heater voltage shall be set to expose the specimen surface to 50 kW/m^2 and shall be allowed to stabilize for 1 minute.

7.2.16 The data acquisition system shall be started.

7.2.17 Thirty to thirty-five seconds after the start of data acquisition, the water-cooled shield shall be lowered to expose the specimen to the infrared heaters.

7.2.18 The following shall be recorded:

(1) Time at the first appearance of vapors from the specimen
(2) Time at ignition
(3) Flame height
(4) Flame color and smokiness
(5) Any unusual flame behavior
(6) Time at flame extinction

7.2.19 If flames reach 35 ± 10 mm above the rim of the collection funnel for more than 30 seconds, they shall be extinguished by introducing nitrogen.

7.2.20 Data acquisition shall be continued for a period of 2 minutes after specimen flaming has ceased.

7.2.21 The specimen shall be removed from the specimen holder and weighed, and the residue mass shall be recorded when the specimen has cooled.

7.2.22 The procedures of 7.2.1 through 7.2.21 shall be repeated to give at least three determinations of the heat release rate, mass loss rate, and smoke yield.

7.3 Procedure 3: Fire Propagation Test. The fire propagation test shall be performed to determine the FPI of a material, through measurement of the chemical heat release rate of a vertical specimen during and after upward fire propagation.

7.3.1 The procedures of 7.2.1 through 7.2.7 for measurement of heat release rate, with the exception of the load cell calibration, shall be repeated.

7.3.2 The stainless steel load cell shaft and the ball-bushing bearings in the air distribution chamber shall be removed and replaced with the appropriate vertical specimen holder, and the specimen shall be installed, so that the bottom edge of the vertical specimen that is to be exposed to external heat flux is at an elevation equivalent to that of the top surface of a horizontal specimen.

7.3.3 The pilot flame shall be ignited and adjusted for a 10 mm flame length.

7.3.4 The exhaust and air supply blowers servicing the apparatus shall be turned on, and a cylinder of Grade 2.6 oxygen shall be connected to the inlet air supply line.

7.3.5 The air and water supplies shall be turned on to cool the infrared heaters.

7.3.6 The quartz pipe shall be installed on the mounting step in the aluminum oxidant supply pipe.

7.3.7 The water-cooled shield surrounding the specimen holder shall be raised to prevent exposing the specimen to the external heat flux.

7.3.8 The pilot flame shall be moved to a position 75 mm above the bottom of the specimen and 10 mm away from the specimen surface.

7.3.9 The inlet air/oxygen flow shall be set at 200 ± 20 L/min, the inlet oxygen concentration at 40 percent, and the exhaust flow rate at 0.25 ± 0.025 m^3/sec.

7.3.10 The infrared heater voltage shall be set to produce 50 kW/m^2 and allowed to stabilize for 1 minute.

7.3.11 The data acquisition program shall be started.

7.3.12 Thirty to thirty-five seconds after the start of data acquisition, the water-cooled shield shall be lowered to expose the lower portion of the vertical specimen to the infrared heaters, and the ignition timer shall be started.

7.3.13 The base area of the specimen shall be preheated for 1 minute.

7.3.13.1 If ignition and fire propagation have not already occurred, the pilot flame shall be moved into contact with the specimen surface 75 mm above the bottom of the specimen to initiate fire propagation.

7.3.13.2 The pilot flame shall then be moved away from the specimen.

7.3.14 The chemical heat release rate shall be measured as a function of time during and after fire propagation, using the combustion test procedures.

7.3.15 The following shall be recorded: the time at the first appearance of vapors from the specimen, the time at ignition, the flame height at 1-minute intervals, the flame color and smokiness, any unusual flame behavior, and the time at flame extinction.

7.3.16 The test shall be terminated 2 minutes after the end of visible flaming or if flames reach 35 ± 10 mm above the rim of the collection funnel for more than 30 seconds or if the specimen undergoes noticeable structural deformation.

7.3.17 The procedures of 7.3.1 through 7.3.16 shall be repeated to give at least three heat release rate determinations.

7.4 Safety Precautions. All normal laboratory safety precautions shall be followed.

--`,,```,,,,````-`-`,,`,,`,`,,`---

Copyright National Fire Protection Association
Provided by IHS under license with NFPA
No reproduction or networking permitted without license from IHS
Not for Resale

7.4.1* During the test, the operator shall use hearing protection and at least shade 5 welding goggles or glasses.

7.4.1.1 The operator shall use protective gloves to insert and remove test specimens.

7.4.1.2 The specimen residue shall be transferred to a fume hood.

7.4.1.3 Neither the infrared heaters nor the associated fixtures shall be touched while they are hot except with protective gloves.

7.4.2 Exhaust System.

7.4.2.1 The exhaust shall be checked for proper operation before testing and shall be discharged away from intakes for the building ventilation system.

7.4.2.2 Provision shall be made for collecting and venting any combustion products that fail, for whatever reason, to be collected by the normal exhaust system of the apparatus.

Chapter 8 Calculations

8.1 Critical Heat Flux (CHF). The CHF shall be the intercept with the ordinate of a straight-line regression fit to data on external heat flux (from the infrared heaters) versus the inverse of time to ignition.

8.1.1 Data shall be from the four lowest values for heat flux (e.g., 30 kW/m^2, 25 kW/m^2, 20 kW/m^2, and 15 kW/m^2) in the ignition test.

8.1.2 The standard deviation (or standard error) of the intercept due to data scatter shall be within 10 percent of the regression fit intercept.

8.1.3 Additional data shall be obtained if the standard deviation exceeds this limit.

8.2 Thermal Response Parameter (TRP). The TRP shall be the slope of a straight-line regression fit to data on external heat flux (from the infrared heaters) versus the inverse of the square root of the time to ignition.

8.2.1 Data shall be from the four highest values for external heat flux (e.g., 45 kW/m^2, 50 kW/m^2, 55 kW/m^2, and 60 kW/m^2) in the ignition test.

8.2.2 The standard deviation (or standard error) of the slope due to data scatter shall be within 10 percent of the regression fit slope.

8.2.3 Additional data shall be obtained if the standard deviation exceeds this limit.

8.3 Fire Propagation Index (FPI).

8.3.1 The FPI shall be determined from the fire propagation and ignition tests by using the following equation:

$$\text{FPI} = \frac{1000\left(\frac{0.42\dot{Q}_{chem}}{W}\right)^{1/3}}{\text{TRP}}$$

where $\dot{Q}_{chem}$ shall be obtained from the fire propagation test and TRP from the ignition test.

8.3.2 The chemical heat release rate shall be determined from the following equation:

$$\dot{Q}_{chem} = 13{,}300\left(\dot{G}_{CO_2} - \dot{G}^0_{CO_2}\right) + 11{,}100\left(\dot{G}_{CO} - \dot{G}^0_{CO}\right)$$

8.3.3 The mass flow rates of CO_2 and CO shall be determined from the following equations:

$$\dot{G}_{CO_2} = A_d K\left(\frac{P_{atm}}{101{,}000}\right)^{1/2}\left[2\left(\frac{353\Delta p_m}{T_d}\right)\right]^{1/2}\left(0.152X_{CO_2}\right)$$

$$\dot{G}_{CO} = A_d K\left(\frac{P_{atm}}{101{,}000}\right)^{1/2}\left[2\left(\frac{353\Delta p_m}{T_d}\right)\right]^{1/2}\left(0.966X_{CO}\right)$$

where 353 (kg · K/m^3) is the product of air density and temperature at normal atmospheric pressure.

8.4 Effective Heat of Combustion (EHC). The EHC shall be determined from the following equation:

$$\text{EHC} = \frac{\Sigma \dot{Q}_{chem}\Delta t_i}{M_{loss}}$$

where the summation shall be taken over all combustion test data scans and $\dot{Q}_{chem}$ shall be obtained from 8.3.2 and 8.3.3.

8.5 Smoke Calculations.

8.5.1 The optical density in the test section duct shall be determined from the following equation:

$$D = \ln\frac{\left(\frac{I_0}{I}\right)}{L}$$

where:
D = optical density (m^{-1}) at laser wavelength of 0.6328 μm
I_0/I = fraction of light transmitted through smoke
L = optical path length (m)

8.5.2 The volume fraction of smoke f_v shall be obtained from the following expression (Newman and Steciak, 1987):

$$f_v = \frac{D\lambda\times10^{-6}}{c}$$

where:
λ = wavelength of the light source (μm)
c = coefficient of smoke extinction taken as 7

8.5.3 The mass generation rate (kg/m^{2}sec) of smoke shall be given by the following:

$$\dot{G}''_s\frac{f_v\dot{v}\rho_s}{A} = \left(\frac{D\lambda}{7}\right)\left(\frac{\rho_s\dot{v}\times10^{-6}}{A}\right)$$

where:
$\dot{v}$ = volumetric flow rate in the test section duct (m^3/sec)
A = burning sample surface area (m^2)
ρ_s = value of smoke density taken as 1.1×10^3 kg/m^3 with a laser wavelength of 0.6328 μm

Copyright National Fire Protection Association
Provided by IHS under license with NFPA
No reproduction or networking permitted without license from IHS
Not for Resale

Substituting these values provides a mass generating rate of smoke, as follows:

$$\dot{G}_s'' = 0.0994\times10^{-3}\left(\frac{D\dot{v}}{A}\right)$$

8.5.4 The total smoke generated, W_s (kg), shall be obtained by the summation of the generation rate from ignition to flameout times as follows:

$$W_s = A\sum G_s''(t_n)\Delta t_n$$

8.5.4.1 The total mass loss, W_m (kg), shall be calculated by the summation of the mass loss rate, $\dot{m}''\left(\text{kg/m}^3\ \text{sec}\right)$ from ignition to flameout times, as follows:

$$W_m = A\sum_{n=t_{ig}}^{n=t_{fx}} \dot{m}''(t_n)\Delta t_n$$

8.5.5 The average value of smoke yield, $\bar{Y}_s$, shall be determined as follows:

$$\bar{Y}_s = \frac{W_s}{W_m}$$

8.5.6 The average value of smoke yield, $\bar{Y}_s$, shall also be permitted to be obtained from the average specific extinction area, $\bar{\tau}\left(m^2/kg\right)$ at the same laser wavelength of 0.6328 μm (ASTM E 1354). The average specific extinction area can be determined as follows:

$$\bar{\tau} = \frac{\sum \dot{v}_l D_l \Delta t_l}{W_m}$$

8.5.6.1 Using the expression for average specific extinction area, the average smoke yield shall be calculated as follows:

$$\bar{Y}_s = 0.0994\times10^{-3}\bar{\tau}$$

8.6 Convective Heat Release Rate.

8.6.1 The convective heat release rate shall be determined from the following equation:

$$\dot{Q}_c = m_d c_p (T_d - T_a)$$

$$= A_d K\left(\frac{P_{atm}}{101{,}000}\right)^{1/2}\left[2\left(\frac{353\,p_m}{T_d}\right)\right]^{1/2} c_p (T_d - T_a)$$

where all terms in this equation shall be evaluated from combustion test data scans.

8.6.2 The gas specific heat shall be corrected for temperature by the following equation:

$$c_p = 1.00 + 1.34\left(10^{-4}T_d - \frac{2590}{T_d^2}\right)$$

Chapter 9 Report

9.1 General Test Description and Ignition Test. The following information shall be provided in a test report:

(1) Specimen identification code or number
(2) Manufacturer or name of organization submitting specimen
(3) Date of test
(4) Operator of apparatus
(5) Composition or generic identification of specimen
(6) Specimen thickness and dimensions of specimen surface exposed to infrared heaters (mm)
(7) Specimen mass (kg)
(8) Specimen orientation, specimen holder, and description of special mounting procedures
(9) Room temperature (°C) and relative humidity (percent)
(10) Radiant flux from infrared heating system applied to test specimen (kW/m^2)
(11) Time when vapors are first observed coming from the test specimen (sec)
(12) Time at which there is sustained flaming (sec)
(13) Thermal response parameter ($kW\cdot sec^{-1/2}/m^2$)
(14) Critical heat flux (kW/m^2)
(15) Additional observations (including times of transitory flaming, flashing, or melting)

9.2 Combustion Test. In addition to the information in Section 9.1(1) through 9.1(15), the report shall include the following information:

(1) Chemical and convective heat release rates per unit exposed area of specimen (kW/m^2)
(2) Generation rates of carbon monoxide and carbon dioxide (kg/sec)
(3) Effective heat of combustion (kJ/kg)
(4) Smoke yield values corresponding to wavelength of 632.8 nm
(5) Specimen mass remaining after test (kg)
(6) Specimen mass loss rate (kg/sec)
(7) Number of replicate specimens tested under the same conditions

9.3 Fire Propagation Test. In addition to the information in Sections 9.1 and 9.2, the report shall include the following information:

(1) Chemical heat release rate (kW)
(2) Chemical heat release rate per exposed width or circumference of specimen (kW/m)
(3) Flame height (m)
(4) Thermal response parameter for the specimen, if previously obtained from the ignition test method ($kW\cdot sec^{1/2}/m^2$)
(5) Fire propagation index, calculated using the value in Section 9.3(2) ($m^{5/3}/kW^{2/3}sec^{1/2}$)
(6) Number of replicate specimens tested under the same conditions

Annex A Explanatory Material

Annex A is not a part of the requirements of this NFPA document but is included for informational purposes only. This annex contains explanatory material, numbered to correspond with the applicable text paragraphs.

A.1.2.1 The test methods described within this document are part of an existing procedure detailed in *Approval Standard for Clean Room Materials*, Class Number 4910, from FM Global Research.

This standard is different from other fire test standards because it measures the chemical heat release rate during and after the actual process of self-sustained, upward fire propagation on a small-scale, vertical test specimen. Such measurement is made possible by the use of inlet air having a 40 percent oxygen concentration (Tewarson et al. 1981) to differentiate among the

Copyright National Fire Protection Association
Provided by IHS under license with NFPA
No reproduction or networking permitted without license from IHS
Not for Resale

flame heat transfer characteristics of burning materials, in the absence of any imposed, high-intensity radiant flux. On the other hand, existing standard test methods — for example, ASTM E 906, *Standard Test Method for Heat and Visible Smoke Release Rates for Materials and Products*, and NFPA 271, *Standard Method of Test for Heat and Visible Smoke Release Rates for Materials and Products Using an Oxygen Consumption Calorimeter* (equivalent to ASTM E 1354, *Standard Test Method for Heat and Visible Smoke Release Rates for Materials and Products Using an Oxygen Consumption Calorimeter*) — measure the rate of heat release from burning materials entirely exposed to an external radiant flux.

A.1.2.3 Examples of the use of this methodology for specific polymer materials are described in Annex B. Cleanroom materials and products containing a wide range of polymer composition and internal structure have undergone the ignition, combustion, and/or fire propagation test methods and are also described in Annex B.

A.1.2.4.1 Specimens are coated with black paint for the ignition and combustion test to ensure complete absorption of the radiant heat flux from the infrared heating system (note that the coating does not itself undergo sustained flaming).

A.1.2.4.3 The FPI is based on the theory that fire propagation is related both to the heat flux from the flame of a burning material and to the resistance of a material to ignite (expressed by the TRP) (Tewarson and Khan 1988, Tewarson 2002, and FMGR Class Number 4910, *Approval Standard for Clean Room Materials*). The flame heat flux is inferred from the chemical heat release rate per unit width of a vertical specimen during upward fire propagation in air having a 40 percent oxygen concentration. The chemical heat release rate is derived from the release rates of carbon dioxide and carbon monoxide (Tewarson 2002).

The 40 percent oxygen concentration is needed to simulate the radiant heat flux from real-scale flames, as demonstrated in the discussion on "Flame Heat Flux" and Table 3.4.8 in *The SFPE Handbook of Fire Protection Engineering*.

A.4.2.1 The following is being provided for informational purposes only and has not been independently verified, certified, or endorsed by NFPA or any of its technical committees.

A suitable infrared heating system, consisting of four Model 5208-05 high-density infrared heaters, Model 500T3/CL/HT lamps, and Model 664 SCR power controller, is available from Research, Inc., 7128 Shady Oak Rd., Minneapolis, MN 55344.

The reflector body of each infrared heater is water cooled, and the lamp chamber, between the front quartz window and reflector, is air cooled, to prolong the life of the heaters. All wavelengths greater than 2 microns emitted by the tungsten filaments in the heater lamps are absorbed by the quartz bulb envelope and heater front window, both of which are air cooled.

A.4.3.2 The incorporation of the threaded adjustment rod at the lower end of the stainless steel shaft is to compensate for horizontal test specimens of different thicknesses.

A.4.7.1 The air distribution chamber is designed so that inlet air flows downward through the eight discharge tubes, disperses on the bottom plate, then rises through the mesh screens toward the aluminum support cylinder.

A.4.9.2 See Annex C for background information on Exhaust System Option 2.

A.4.10.2 The measured differential pressure is proportional to the square of the flow rate. Experience has shown that the averaging pitot probe in this application is reliable (not susceptible to plugging), while minimizing pressure losses in the exhaust system.

A.4.10.3 The power of the laser smoke-measuring unit should be turned on at least one hour before calibration is conducted. Two neutral density glass filters of optical density of 0.3 and 0.8 values accurately calibrated at the laser wavelength of 0.6328 μm are required. The smoke system is initially calibrated to read accurately for two different values neutral density filters, and also at 100 percent transmission. Once this calibration is done, only the zero value of extinction coefficient (100 percent transmission) is normally required to be verified prior to each test. See Chapter 8 for smoke calculations.

A.5.4.1.2 The reference value of 27,900 kJ/kg is from "Generation of Heat and Chemical Compounds in Fires," Section 3, Chapter 4, of *The SFPE Handbook of Fire Protection Engineering*.

A.6.3.1 The following is being provided for informational purposes only and has not been independently verified, certified, or endorsed by NFPA or any of its technical committees.

A suitable flat, black spray paint is Thurmalox® Solar Collector Coating, No. 250 Selective Black, available from the Dampney Company, 85 Paris St., Everett, MA 02149.

The paint coating is applied to specimens to ensure surface absorption of the imposed radiant heat flux.

A.7.1.12 Heat-resistant gloves should be used when handling hot samples.

A.7.4.1 The test procedures involve high temperatures and combustion reactions. Therefore, hazards can occur such as burns, ignition of extraneous objects or clothing, and inhalation of combustion products.

Annex B Background Material

This annex is not a part of the requirements of this NFPA document but is included for informational purposes only.

B.1 Fire Propagation Apparatus. The fire propagation apparatus was first developed and used by Factory Mutual Research Corporation (now FM Global Research) in the mid-1970s. The apparatus collects the flow of combustion gases from a test specimen and then conditions the flow to uniform velocity, temperature, and species concentration within the test section duct, where the measurements are made. This uniformity is achieved by passing the flow through an orifice at the entry to a mixing duct located six duct diameters upstream of the test section (Ackeret 1967).

B.2 Comparing Fire Propagation Propensity Results with Full-Scale Fire Behavior.

B.2.1 Fire propagation propensity, characterized by the FPI, has been compared (Tewarson et al. 1998) with fire propagation behavior during full-scale tests involving vertical parallel arrays containing electrical cables insulated with polymeric material (Tewarson et al. 1998 and FMGR Class Number 3972, *Cable Fire Propagation Specification Test Standard*) or solid panels of polymeric material (Wu 1999 and FMGR Class Number 4910, *Approval Standard for Clean Room Materials*). The full-scale tests involved fires initiated by a 60 kW propane sand-burner located between the 2.44 m high parallel arrays below their base (Ackeret 1967). In addition, fire propagation propensity, characterized by the FPI, has been compared with the fire propagation behavior of conveyor belts in a U.S. Bureau of Mines large-scale fire test gallery (Tewarson et al. 1998). A

Copyright National Fire Protection Association
Provided by IHS under license with NFPA
No reproduction or networking permitted without license from IHS
Not for Resale

flammable liquid pool fire initiated these conveyor belt fires (Lazzara and Perzak 1989).

B.2.2 Table B.2.2, extracted from Table 1 in "Flammability of Clean Room Materials" (Tewarson et al. 1998), illustrates how the fire propagation index is related to full-scale fire propagation behavior.

Table B.2.2 shows that an FPI equal to or less than a value of 6 $m^{5/3}/kW^{2/3}sec^{1/2}$ correlates very well with full-scale fire behavior in which propagation is limited to the ignition zone.

Table B.2.2 Comparison of FPI Value with Full-Scale Fire Propagation Behavior

Material Composition and Arrangement*	FPI from Fire Propagation Test Method ($m^{5/3}/kW^{2/3}sec^{1/2}$)	Fire Propagation Beyond the Ignition Zone at Full Scale†
Gray PVC panel	4	None
PVDF panel	5	None
White PVC panel	6	None
Rigid, Type I PVC panel	8	Limited
Modified FRPP panel	9	Yes
ETFE panel	9	Limited
FRPP panel	>10	Yes
PMMA panel	>10	Yes
XLPE/neoprene cable	9	Limited
PVC/PVDF cable	7	Limited
XLPO cable	9	Limited
XLPE/EVA cable	7	Limited
PE/PVC cable	20	Yes
CR or PVC conveyor belts	<6	None
CR or SBR conveyor belts	7–8	Limited
PVC or SBR conveyor belts	>8	Yes

*Polymer abbreviations:
(1) PVC — polyvinylchloride
(2) PVDF — polyvinylidene fluoride
(3) FRPP — fire retarded polypropylene
(4) ETFE — ethylenetetrafluoroethylene
(5) PMMA — polymethylmethacrylate
(6) XLPE — crosslinked polyethylene
(7) XLPO — crosslinked polyolefin
(8) EVA — ethylvinyl acetate
(9) PE — polyethylene
(10) CR — chloroprene rubber
(11) SBR — styrene-butadiene rubber

†Propagation behavior:
(1) Yes — fire propagates beyond the ignition zone to the boundary of the exposed material surface
(2) Limited — fire propagates beyond the ignition zone, but propagation stops well before the boundary of the exposed material surface
(3) None — fire does not propagate beyond the ignition zone, defined as the area of flame coverage by the initiating fire source

Source: Tewarson et al. 1998.

B.3 Examples of Materials Previously Tested in the FPA. A wide range of polymeric materials and products has been tested in the fire propagation apparatus, in addition to the polymers noted in Table B.2.2. Tables 3-4.2, 3-4.3, and 3-4.11 in *The SFPE Handbook of Fire Protection Engineering* illustrate the different polymer groups that have undergone the ignition, combustion, or fire propagation tests.

B.4 Optional Measurement of the Corrosion Potential of Fire Effluent.

B.4.1 Definitions.

B.4.1.1 Average Corrosion Index (ACI). Indicator of corrosion damage caused by the fire effluent from a burning material.

B.4.1.2 C_{loss}. Measured metal loss from the corrosion probe due to a 500-minute combined exposure and monitoring time during and after a combustion test, respectively.

B.4.2 Corrosion Measurement System. The optional corrosion measurement system in the fire propagation apparatus is used to measure metal loss (C_{loss}) due to corrosion from combustion products, as shown in Figure B.4.2.

The following is being provided for informational purposes only and has not been independently verified, certified, or endorsed by NFPA or any of its technical committees.

A suitable corrosion measurement system is the Model P/N 657501-X1 corrosion probe with the Model RCS-8 Corrosometer, available from Rohrback Cosasco Systems, Inc., 11841 East Smith Ave., Santa Fe Springs, CA 90670.

Because of the relatively short duration of the flow of fire effluent from a burning test specimen, monitoring of the corrosion of the probe sensor element, initially exposed in the test section duct, continues for a specified time period in a prescribed, quiescent environment to obtain a meaningful value of ACI.

B.4.2.1 The corrosion probe is a corrosion-measuring device specially adapted from that described in "The Influence of Oxygen Concentration on Fuel Parameters for Fire Modeling" (Tewarson et al. 1981) for use in the fire environment of the exhaust duct. It consists of two copper elements, each 48 mm × 5 mm, embedded parallel to each other in a 152 mm × 26 mm epoxy-fiberglass plate. One copper element should be coated, to act as a reference for the other, uncoated copper element/sensor. The sensor element should have a thickness that allows corrosion measurement (span thickness) of 0.2600 micron, ± 10 percent.

B.4.2.2 The corrosometer assesses corrosion by the electrical resistance method. It measures the change in resistance of the sensor element of the corrosion probe as compared with the resistance of the protected reference element of the corrosion probe. The system has a linear response in terms of the change in electrical resistance with sensor-element metal loss, a drift of no more than ± 0.1 percent of span thickness over a period of 24 hours, and a resolution of 0.1 percent of span thickness. The operating temperature is between 0°C and 50°C.

B.4.3 Calibration of Corrosion Measurement System.

B.4.3.1 Ensure that the repeatability of the corrosion measurement is within ± 20 percent by conducting a combustion test with 30 g of pure, low-density polyvinylchloride powder in the circular specimen holder.

Copyright National Fire Protection Association
Provided by IHS under license with NFPA
No reproduction or networking permitted without license from IHS
Not for Resale

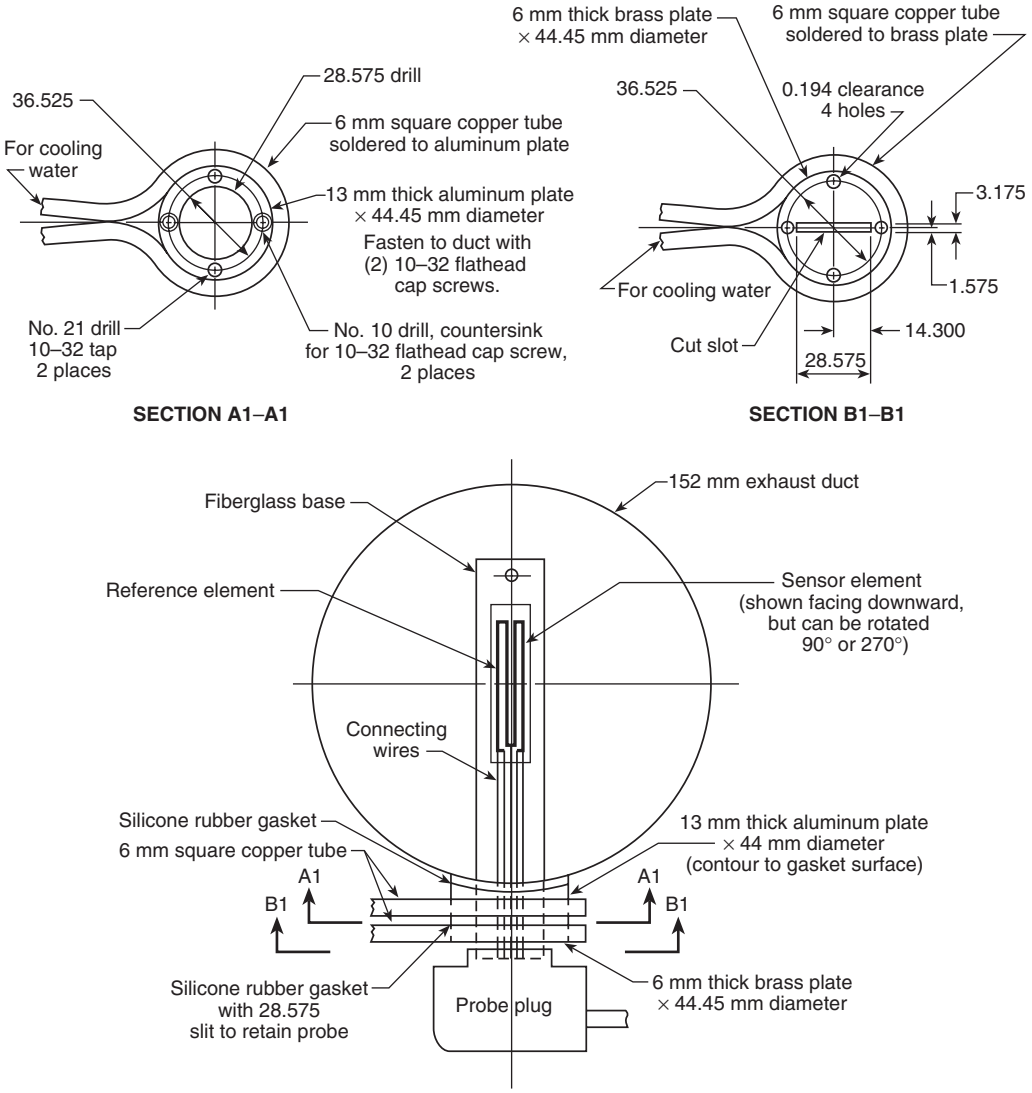

Note: All dimensions are mm unless noted.

FIGURE B.4.2 Corrosion Probe in Exhaust Duct, 300 mm from End of Test Section.

B.4.3.2 Ensure that the minimum corrosometer output is zero (within the resolution of the instrument) by conducting a combustion test with 30 g of pure polypropylene beads in the circular specimen holder, using an infrared heater flux of 30 kW/m^2.

B.4.4 Corrosion Measurement Procedure. This procedure should be performed after the normal calibration procedures for the combustion test specified in 7.2.6 and after the calibration of the corrosion measurement system specified in B.4.3.

B.4.4.1 Inspect the corrosion probe for spot or discoloration defects in the copper strips, and clean the probe with a zero-residue organic solvent (that does not react with copper) using cotton swabs. The probe surface should not be contaminated after cleaning.

B.4.4.2 Turn on power to the corrosometer and prepare for corrosion data recording.

B.4.4.3 Initialize the corrosion probe by monitoring probe status on the corrosometer, and then record corrosion data from the probe every 5 minutes until the start of the combustion test.

B.4.4.4 Insert the cleaned, initialized probe into the test section duct horizontally with the measuring and reference elements facing downward, toward the upstream fire products, and the center of the probe elements at the center of the duct, as shown in Figure B.4.2. This step is performed after the exhaust and air supply blowers have been operating for 30 minutes *(see 7.2.7)*.

B.4.4.5 Monitor corrosion data every minute during the combustion test.

B.4.4.6 Remove the corrosion probe from the test section duct 30 minutes after the end of the combustion test, and place the probe inside an environmentally controlled

Copyright National Fire Protection Association
Provided by IHS under license with NFPA
No reproduction or networking permitted without license from IHS
Not for Resale

chamber maintained at an ambient temperature of 23 ± 3°C and a relative humidity of 60 ± 5 percent. Monitor corrosion data from the probe in the chamber every 5 minutes for at least 16 hours.

B.4.5 Optional Calculation of Average Corrosion Index. The average corrosion index is determined from the measured metal loss due to a combined 500-minute exposure time during the combustion test and monitoring time in the environmental chamber after the combustion test, using the following equation:

$$ACI = \frac{\frac{C_{loss}}{500}}{\frac{0.95 M_{loss}}{\sum_{i=t_0}^{i=t_f} \dot{v}_i \Delta t_i}}$$

where ACI is the ratio of an average corrosion rate to an average combustion product concentration in the test section duct, with the concentration averaged from the time, t_0, when there is detectable specimen mass loss, until the time, t_f, when 95 percent of the ultimate mass loss has occurred.

B.4.6 Average Corrosion Index. Report the average corrosion index (angstrom $m^3/kg \cdot min$), along with other combustion test parameters if corrosion measurements are obtained.

Annex C Background Information on Exhaust System Option 2

This annex is not a part of the requirements of this NFPA document but is included for informational purposes only.

C.1 Introduction. An alternative version of Fire Propagation Apparatus (FPA) has been developed using a horizontal exhaust configuration. This alternative configuration has undergone extensive testing at FM Global Research in Norwood, MA, to ensure compatibility of results with the original, vertical exhaust duct FPA. As part of the testing procedure, the uniformity of the flow in the measuring section of the horizontal exhaust duct was checked using probe traverses. It was determined that uniformity (in terms of flat velocity, temperature, and concentration profiles) could be achieved with a 1.6 mm thick orifice plate having a mixing orifice diameter of 91.5 mm at an exhaust flow rate of 0.15 ± 0.015 m^3/sec.

C.2 Test Conditions. To compare results from the horizontal exhaust configuration with those from the vertical configuration, ignition, combustion, and propagation test methods were performed following Sections 7.1, 7.2, and 7.3, respectively, with acetone liquid, 9.5 mm thick clear PMMA, 9.5 mm thick rigid PVC, 12.7 mm thick rigid CPVC, or combination thereof. Acetone was tested without any external heat flux, respectively, in normal air. The CPVC specimens were tested in a gaseous mixture having a 40 percent oxygen concentration, by volume, generated by adding oxygen to ambient air.

C.3 Test Results for Effective Heat of Combustion. Table C.3 summarizes test results calculated following Section 8.4.

C.4 Test Results for Time Ignition. Table C.4(a) and Table C.4(b) present the measured time to ignition as a function of incident heat flux for PMMA and rigid PVC specimens respectively.

C.5 Test Results for Heat Release Rate in the Combustion Test Method. The chemical heat release rates for horizontal PMMA and rigid PVC are shown in Figure C.5 as a function of time. The chemical heat release rate profiles are very similar for the two exhaust duct orientations.

C.6 Test Results for Heat Release Rate in the Propagation Test Method. Table C.6 gives peak heat release rate values from running 15-second averages during the fire propagation test method, as determined with both exhaust duct orientations. An air inflow with a 40 percent oxygen concentration is used for three repeat tests with vertical CPVC specimens.

Table C.3 Effective Heat of Combustion

Specimen Composition	Effective Heat of Combustion — Vertical Exhaust Configuration (kJ/g)	Effective Heat of Combustion — Horizontal Exhaust Configuration (kJ/g)	Relative Difference from the Mean Value (%)
Acetone	27.1	26.1	0.7
PMMA	23.2	24.4	2.5
Rigid PVC	6.86	6.4	3.5

Table C.4(a) Ignition Test Results for PMMA

Incident Heat Flux (kW/m^2)	Ignition Time — Vertical Exhaust Configuration (sec)	Ignition Time — Horizontal Exhaust Configuration (sec)	Relative Difference from the Mean Value (%)
30	347.4	38.7	1.7
40	22.4	24	3.4
50	14.4	15.4	3.4
60	10.1	10.9	3.8

Copyright National Fire Protection Association
Provided by IHS under license with NFPA
No reproduction or networking permitted without license from IHS
Not for Resale

Table C.4(b) Ignition Test Results for Rigid PVC

Incident Heat Flux (kW/m^2)	Ignition Time — Vertical Exhaust Configuration (sec)	Ignition Time — Horizontal Exhaust Configuration (sec)	Relative Difference from the Mean Value (%)
30	117	114	1.3
40	72.1	75.8	2.5
50	47.3	49.2	2
60	34.6	34.9	0.4

Note: Samples were restrained with 24-gauge nickel–chromium wire.

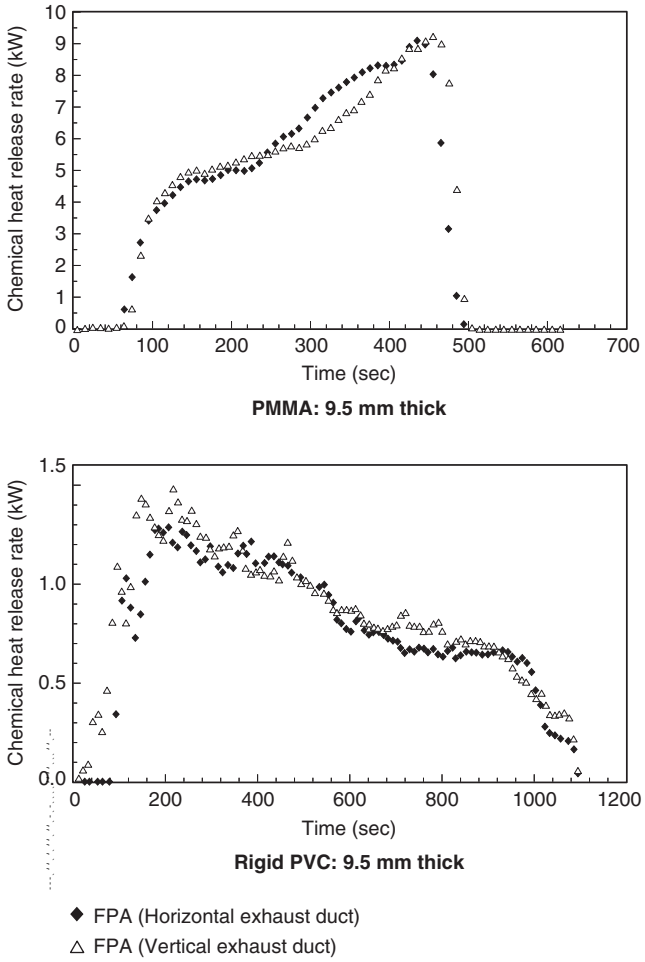

FIGURE C.5 Heat Release Rate Time History for PMMA and Rigid PVC.

C.7 Discussion of Test Results. Based on the measurements and results in Sections C.3 through C.6, the FPA incorporating a horizontal duct provides comparable results to those measured using the comparable results to those measured using the original FPA with a vertical exhaust duct. Additional measurement and results indicate that the performance in horizontal duct is equivalent to the original vertical exhaust duct (Khan and Bill 2003).

Table C.6 Heat Release Rate of Vertical CPVC Specimens During Propagation Test

FPA with Vertical Exhaust (kW)	FPA with Horizontal Exhaust (kW)	Relative Difference from the Mean Value (%)
3.84	3.84	0
3.53	3.70	2.4
3.60	3.92	4.3

Source: Khan and Bill, 2003.

Annex D Informational References

D.1 Referenced Publications. The documents or portions thereof listed in this annex are referenced within the informational sections of this standard and are not part of the requirements of this document unless also listed in Chapter 2 for other reasons.

D.1.1 NFPA Publications. National Fire Protection Association, 1 Batterymarch Park, Quincy, MA 02169-7471.

NFPA 271, *Standard Method of Test for Heat and Visible Smoke Release Rates for Materials and Products Using an Oxygen Consumption Calorimeter*, 2004 edition.

Tewarson, A. 2002. "Generation of Heat and Chemical Compounds in Fires." In *The SFPE Handbook of Fire Protection Engineering*, 3rd ed., National Fire Protection Association, Quincy, MA, pp. 3-82 through 3-161.

D.1.2 Other Publications.

D.1.2.1 ASTM Publications. ASTM International, 100 Barr Harbor Drive, P.O. Box C700, West Conshohocken, PA 19428-2959.

ASTM E 906, *Standard Test Method for Heat and Visible Smoke Release Rates for Materials and Products*, 1997.

ASTM E 1354, *Standard Test Method for Heat and Visible Smoke Release Rates for Materials and Products Using an Oxygen Consumption Calorimeter*, 2004.

D.1.2.2 FMGR Publications. FM Global Research, FM Global, 1301 Atwood Avenue, P.O. Box 7500, Johnston, RI 02919.

Class Number 3972, *Cable Fire Propagation Specification Test Standard*, March 1994.

Class Number 4910, *Approval Standard for Clean Room Materials*, September 1997.

Tewarson, A., R. G. Bill, Jr., A. Braga, V. DeGiorgio, and G. Smith. 1998. "Flammability of Clean Room Materials." In *White Paper*, FMRC J.I. 0B0J8.RC.

Copyright National Fire Protection Association
Provided by IHS under license with NFPA
No reproduction or networking permitted without license from IHS
Not for Resale

D.1.2.3 Other Publications.

Ackeret, J. 1967. "Aspects of Internal Flow." In *Fluid Mechanics of Internal Flow* (G. Sovran, ed.), Elsevier, New York, p. 1.

Khan, M. M. and R. G. Bill Jr. 2003. "Comparison of Flammability Measurements in Vertical and Horizontal Exhaust Duct in the ASTM E 2058 Fire Propagation Apparatus." *Fire Mater.* 27: 253–266.

Lazzara, C. P. and F. J., Perzak. 1989. "*Conveyor Belt Flammability Test: Comparison of Large-Scale Gallery and Laboratory-Scale Tunnel Results."* In Proceedings of 23rd International Conference of Safety in Mines, Mines Research Institute, Washington, DC, Sept. 11–15, pp. 138–150.

Tewarson, A. and M. M. Khan. 1988. "Flame Propagation for Polymers in Cylindrical Configuration and Vertical Orientation." In Twenty-Second Symposium (International) on Combustion. The Combustion Institute, Pittsburgh, PA, pp. 1231–1240.

Tewarson, A., J. L. Lee, and R. F. Pion. 1981. "The Influence of Oxygen Concentration on Fuel Parameters for Fire Modeling." In Eighteenth Symposium (International) on Combustion. The Combustion Institute, Pittsburgh, PA, pp. 563–570.

Wu, P. K. 1999. "Parallel Panel Fire Tests for Flammability Assessment." In Proceedings of the 8th International Fire Science and Engineering Conference (Interflam '99). Interscience Communications, London, pp. 605–614.

D.2 Informational References. (Reserved)

D.3 References for Extracts in Informational Sections. (Reserved)

Copyright National Fire Protection Association
Provided by IHS under license with NFPA
No reproduction or networking permitted without license from IHS
Not for Resale

Index

Copyright © 2006 National Fire Protection Association. All Rights Reserved.

The copyright in this index is separate and distinct from the copyright in the document that it indexes. The licensing provisions set forth for the document are not applicable to this index. This index may not be reproduced in whole or in part by any means without the express written permission of NFPA.

-A-

Average corrosion index (ACI) B.4.5
Definition B.4.1.1
Averaging pitot probe 4.10.2, A.4.10.2

-B-

Background material ..... Annex B, Annex C

-C-

Calculations ..... Chap. 8
Average corrosion index (ACI) B.4.5
Convective heat release rate 8.6
Critical heat flux (CHF) 8.1
Effective heat of combustion (EHC) 8.4
Fire propagation index (FPI) 8.3
Smoke calculations 8.5
Thermal response parameter (TRP) 8.2
Calibration of equipment ..... Chap. 5
Carbon dioxide analyzer 4.6.1, 4.6.2, 5.2.2, 7.2.5
Carbon dioxide generation 1.2.1.2, 9.2, A.1.2.4.3
Carbon dioxide mass flow rate 8.3.3
Carbon monoxide analyzer 4.6.1, 4.6.2, 5.2.2, 7.2.5
Carbon monoxide generation 1.2.1.2, 9.2, A.1.2.4.3
Carbon monoxide mass flow rate 8.3.3
Cleanroom (definition) 3.3.1
C_{loss} (definition) B.4.1.2
Combustion air distribution system ... 4.1.2, 4.7, 7.2.7, 7.3.4, A.4.7.1
Combustion test method ..... 1.2.4(2), 1.2.4.2, A.1.1.2, A.1.2.3, B.3
Heat release rate C.5
Horizontal specimens 6.3.1, A.6.3.1
Optional product analyzers for 4.6.4
Procedure 7.2
Report 9.2
Conditioning, of test specimens 6.2
Convective heat release rate, calculations 8.6
Corrosion measurement system .....*see also* Average corrosion index (ACI)
Calibration of B.4.3
Definition B.4.2
Procedure B.4.4
Critical heat flux (CHF) 1.2.3.2, 1.2.3.3, 1.2.4.1, 7.1, A.7.1.12
Calculations 8.1
Definition 3.3.2
Test report 9.1

-D-

Definitions ..... Chap. 3, B.4.1
Digital data collection 4.1.2, 4.12
Combustion test ..... 7.2.16 to 7.2.21
Fire propagation test 7.3.11, 7.3.15
Heat release calibration 5.4.5, 5.4.8
Dimensions 4.1.1

-E-

Effective heat of combustion (EHC) 1.2.3.2, 1.2.3.3, 1.2.4.2, 7.2, C.3
Calculations 8.4
Definition 3.3.3
Measurement process, calibration of 5.4.1.2, 5.4.9, A.5.4.1.2
Test report 9.2
Equipment, calibration of ..... Chap. 5
Exhaust system ..... 1.2.2(3), 4.1.2, 4.9
Background information ..... Annex C
Combustion test 7.2.7
Fire propagation test 7.3.4
Ignition test 7.1.3
Safety precautions 7.4.2

-F-

Fire effluent, corrosion potential of B.4
Fire propagation apparatus (FPA) 1.1.1.1, 1.2.1.2, 1.2.2, B.1
Alternative version of C.1, C.2
Calibration of 5.4.1.1
Examples of materials tested in B.3
Fire propagation index (FPI) 1.2.3.2, 1.2.3.3, B.2
Calculations 8.3
Definition 3.3.4
Fire propagation test to determine 1.2.4.3, 1.2.5, 7.3, 8.3.1, A.1.2.4.3
Ignition test to determine 8.3.1
Test report 9.3
Fire propagation test method ..... 1.1.2, 1.2.2(3), 1.2.3, 1.2.4(3), 1.2.4.3, 1.2.4.5, A.1.1.2, A.1.2.1, A.1.2.3, A.1.2.4.3, B.1 to B.3, C.6
Full-scale fire behavior compared B.2
Ignition test and 6.3.1.3, 6.3.2.3
Procedure 7.3
Report 9.3
Specimen size and preparation 6.3.2

-G-

Gas analysis system 4.1.2, 4.6
Calibration of equipment 5.2
Combustion test ..... 7.2.1 to 5
Delay time, determining 5.4.10

-H-

Heat flux ..... 1.2.1.1, A.1.2.1, A.1.2.4.3; *see also* Critical heat flux (CHF); Infrared heating system
External 1.2.4, 1.2.4.1.1, 1.2.4.1.2, 1.2.4.2, 7.1, 8.1, 8.2, A.1.2.1, A.1.2.4.1, A.7.1.12
Incident C.4
Heat flux gauge 4.11, 5.1.1.2, 5.1.1.3, 5.1.2.2
Heat of combustion .....*see* Effective heat of combustion (EHC)
Heat release rates ..... 1.2.2(3), A.1.1.1.2
Combustion test 1.1.2, 1.2.4.2, 7.2, C.5
Fire propagation test 1.1.2, 7.3, 8.3.2, A.1.2.4.3, C.6
Measurement process, calibration of 5.4, A.5.4.1.2
Test report 9.2, 9.3
Horizontal specimens, ignition and combustion tests of .....*see* Test specimens
Hydrocarbon analyzer 4.6.1, 4.6.4.2, 4.6.4.3, 5.2.4, 7.2.3, 7.2.5
Hydrocarbon generation 1.2.1.2

-I-

Ignition pilot flame ..... 1.2.4.1.1, 1.2.4(3), 4.1.2, 4.4
Combustion test 7.2.4, 7.2.9, 7.2.10
Fire propagation test 7.3.3, 7.3.8, 7.3.13.2
Heat release calibration and 5.4.2
Ignition test 7.1.4, 7.1.5

Copyright National Fire Protection Association
Provided by IHS under license with NFPA
No reproduction or networking permitted without license from IHS
Not for Resale

Ignition test method ..... 1.2.4(1), 1.2.4(2), 1.2.4.1, A.1.1.2, A.1.2.3, A.1.2.4.1, B.3
Horizontal specimens 6.3.1, A.6.3.1
Procedure 7.1, A.7.1.12
Report 9.1
Ignition time 7.1, 7.1.10, 8.1, 8.2, A.1.1.1.2, A.1.1.2, A.7.1.12, C.4
Ignition timer 4.1.2, 4.5, 7.3.12
Infrared heating system ..... 1.2.2(1), 1.2.4.1.1, 1.2.4.1.2, 1.2.4.2, 1.2.4.3, 4.1.2, 4.2, A.1.2.4.1, A.4.2.1; *see also* Heat flux
Calibration of 5.1
Combustion test 7.2.11, 7.2.15
Fire propagation test 7.3.5, 7.3.10, 7.3.12
Heat release calibration and 5.4.2
Ignition test 7.1.6, 7.1.8, 7.1.13
Safety precautions 7.4.1.3
Test report 9.1

-L-

Load cell system 4.1.2, 4.3, 5.3, 7.3.2, A.4.3

-M-

Mass loss rates 1.1.2, 7.2.22, 8.5.4.1, 9.2, A.1.1.1.2
Measurement
Dimensions 4.1.1
Units of 1.4
Mounting of test specimens 6.4

-O-

Optional product analyzers for combustion test 4.6.4
Oxygen analyzer 4.6.1, 4.6.3, 4.6.4, 5.2.3, 7.2.5

-P-

Polymers, used in cleanroom applications ..... 1.1.1, 1.2.1, A.1.2.1, A.1.2.3, Annex B
Power controller 4.2.2
Pressure transducer 4.10.2, A.4.10.2
Purpose of standard ..... 1.2, A.1.2.1 to A.1.2.4.3

-R-

Radiant heat flux .....*see* Heat flux; Infrared heating system
References ..... Chap. 2, Annex D
Report, test ..... Chap. 9

-S-

Safety precautions 1.2.6, 7.4, A.7.4.1
Scope of standard 1.1
Shall (definition) 3.2.1
SI units 1.5
Smoke calculations 1.2.3, 8.5
Smoke extinction coefficient A.1.1.1.2, A.1.1.2
Smoke-measuring unit 4.10.3, A.4.10.3
Smoke yield ..... 1.2.2(4), 1.2.3.2, 1.2.3.3, 1.2.4.2, 7.2.22, 8.5.5, 8.5.6
Definition 3.3.5
Test report 9.2
Specimen holders 6.1
Specimen size and preparation 6.3, A.6.3.1
Standard (definition) 3.2.2
Symbols 1.3

-T-

Test apparatus ..... Chap. 4
Test methods
Combustion 1.2.4.2
Fire propagation 1.2.4.3, A.1.2.4.3
Ignition 1.2.4.1
Test procedure ..... Chap. 7
Combustion test 7.2
Fire propagation test 7.3
Ignition test 7.1, A.7.1.12
Procedure 7.1, A.7.1.12
Safety precautions 7.4, A.7.4.1
Test report ..... Chap. 9
Test section instruments 4.1.2, 4.10, A.4.10.2
Test specimens ..... Chap. 6
Conditioning 6.2
Horizontal, ignition and combustion tests of ..... 1.2.4.1, 1.2.4.2, 6.1, Fig. 6.1(a), 6.3.1, A.6.3.1
Mounting methods 6.4
Specimen holders 6.1
Specimen size and preparation 6.3, A.6.3.1
Types of 6.1
Vertical, fire propagation test of ..... 1.1.2, 1.2.4.3, 1.2.4(3), 1.2.5, 6.1, Fig. 6.1(b), 6.3.2, 7.3, A.1.2.1
Thermal response parameter (TRP) 1.2.3.2, 1.2.3.3, 1.2.4.1, 7.1, A.7.1.12
Calculations 8.2
Definition 3.3.6
Test report 9.3
Thermocouple probe 4.10.1
Time to ignition .....*see* Ignition time

-U-

Units of measurements 1.5

-V-

Vertical specimens, fire propagation test of .....*see* Test specimens

-W-

Water-cooled shield 4.1.2, 4.8
Combustion test 7.2.13, 7.2.17
Fire propagation test 7.3.7, 7.3.12
Ignition test 7.1.7, 7.1.9

Copyright National Fire Protection Association
Provided by IHS under license with NFPA
No reproduction or networking permitted without license from IHS
Not for Resale

Sequence of Events Leading to Issuance of an NFPA Committee Document

Step 1: Call for Proposals

- Proposed new Document or new edition of an existing Document is entered into one of two yearly revision cycles, and a Call for Proposals is published.

Step 2: Report on Proposals (ROP)

- Committee meets to act on Proposals, to develop its own Proposals, and to prepare its Report.
- Committee votes by written ballot on Proposals. If two-thirds approve, Report goes forward. Lacking two-thirds approval, Report returns to Committee.
- Report on Proposals (ROP) is published for public review and comment.

Step 3: Report on Comments (ROC)

- Committee meets to act on Public Comments to develop its own Comments, and to prepare its report.
- Committee votes by written ballot on Comments. If two-thirds approve, Report goes forward. Lacking two-thirds approval, Report returns to Committee.
- Report on Comments (ROC) is published for public review.

Step 4: Technical Report Session

- "*Notices of intent to make a motion"* are filed, are reviewed, and valid motions are certified for presentation at the Technical Report Session. ("Consent Documents" that have no certified motions bypass the Technical Report Session and proceed to the Standards Council for issuance.)
- NFPA membership meets each June at the Annual Meeting Technical Report Session and acts on Technical Committee Reports (ROP and ROC) for Documents with "certified amending motions."
- Committee(s) vote on any amendments to Report approved at NFPA Annual Membership Meeting.

Step 5: Standards Council Issuance

- Notification of intent to file an appeal to the Standards Council on Association action must be filed within 20 days of the NFPA Annual Membership Meeting.
- Standards Council decides, based on all evidence, whether or not to issue Document or to take other action, including hearing any appeals.

Committee Membership Classifications

The following classifications apply to Technical Committee members and represent their principal interest in the activity of the committee.

M *Manufacturer:* A representative of a maker or marketer of a product, assembly, or system, or portion thereof, that is affected by the standard.

U *User:* A representative of an entity that is subject to the provisions of the standard or that voluntarily uses the standard.

I/M *Installer/Maintainer:* A representative of an entity that is in the business of installing or maintaining a product, assembly, or system affected by the standard.

L *Labor:* A labor representative or employee concerned with safety in the workplace.

R/T *Applied Research/Testing Laboratory:* A representative of an independent testing laboratory or independent applied research organization that promulgates and/or enforces standards.

E *Enforcing Authority:* A representative of an agency or an organization that promulgates and/or enforces standards.

I *Insurance:* A representative of an insurance company, broker, agent, bureau, or inspection agency.

C *Consumer:* A person who is, or represents, the ultimate purchaser of a product, system, or service affected by the standard, but who is not included in the *User* classification.

SE *Special Expert:* A person not representing any of the previous classifications, but who has a special expertise in the scope of the standard or portion thereof.

NOTES;
1. "Standard" connotes code, standard, recommended practice, or guide.
2. A representative includes an employee.
3. While these classifications will be used by the Standards Council to achieve a balance for Technical Committees, the Standards Council may determine that new classifications of members or unique interests need representation in order to foster the best possible committee deliberations on any project. In this connection, the Standards Council may make appointments as it deems appropriate in the public interest, such as the classification of "Utilities" in the National Electrical Code Committee.
4. Representatives of subsidiaries of any group are generally considered to have the same classification as the parent organization.

Copyright National Fire Protection Association
Provided by IHS under license with NFPA
No reproduction or networking permitted without license from IHS
Not for Resale

NFPA Technical Committee Document Proposal Form

NOTE: All Proposals must be received by 5:00 p.m. EST/EDST on the published Proposal Closing Date.

For further information on the standards-making process, please contact the Codes and Standards Administration at 617-984-7249.

For technical assistance, please call NFPA at 617-770-3000.

FOR OFFICE USE ONLY

Log #:

Date Rec'd:

Please indicate in which format you wish to receive your ROP/ROC ☐ **electronic** ☐ **paper** ☒ **download**
(Note: If choosing the download option, you must view the ROP/ROC from our website; no copy will be sent to you.)

Date April 1, 200X **Name** John J. Doe **Tel. No.** 716-555-1234

Company Air Canada Pilot's Association

Street Address 123 Summer Street Lane **City** Lewiston **State** NY **Zip** 14092

Please indicate organization represented (if any)

1. (a) NFPA Document Title National Fuel Gas Code **NFPA No. & Year** 54, 200X Edition

(**b) Section/Paragraph** 3.3

2. Proposal Recommends (check one): ☐ new text ☒ revised text ☐ deleted text

3. Proposal (include proposed new or revised wording, or identification of wording to be deleted): [Note: Proposed text should be in legislative format, i.e., use underscore to denote wording to be inserted (inserted wording) and strike-through to denote wording to be deleted (~~deleted wording~~).]

Revise definition of effective ground-fault current path to read:

3.3.78 Effective Ground-Fault Current Path. An intentionally constructed, permanent, low impedance electrically conductive path designed and intended to carry ~~underground~~ electric fault current ~~conditions~~ from the point of a ground fault on a wiring system to the electrical supply source.

4. Statement of Problem and Substantiation for Proposal: (Note: State the problem that would be resolved by your recommendation; give the specific reason for your Proposal, including copies of tests, research papers, fire experience, etc. If more than 200 words, it may be abstracted for publication.)

Change uses proper electrical terms.

5. Copyright Assignment

(a) ☐ **I am the author of the text or other material (such as illustrations, graphs) proposed in this Proposal.**

(b) ☒ **Some or all of the text or other material proposed in this Proposal was not authored by me. Its source is as follows** (please identify which material and provide complete information on its source)**:**

ABC Co.

I hereby grant and assign to NFPA all and full rights in copyright in this Proposal and understand that I acquire no rights in any publication of NFPA in which this Proposal in this or another similar or analogous form is used. Except to the extent that I do not have authority to make an assignment in materials that I have identified in (b) above, I hereby warrant that I am the author of this Proposal and that I have full power and authority to enter into this assignment.

Signature (Required)

PLEASE USE SEPARATE FORM FOR EACH PROPOSAL • NFPA Fax: (617) 770-3500
Mail to: Secretary, Standards Council, National Fire Protection Association, 1 Batterymarch Park, Quincy, MA 02169-7471

8/29/2006

SAMPLE

Copyright National Fire Protection Association
Provided by IHS under license with NFPA
No reproduction or networking permitted without license from IHS
Not for Resale

NFPA Technical Committee Document Proposal Form

NOTE: All Proposals must be received by 5:00 p.m. EST/EDST on the published Proposal Closing Date.

For further information on the standards-making process, please contact the Codes and Standards Administration at 617-984-7249.

For technical assistance, please call NFPA at 617-770-3000.

FOR OFFICE USE ONLY

Log #: _____

Date Rec'd: _____

Please indicate in which format you wish to receive your ROP/ROC ☐ electronic ☐ paper ☐ download
(Note: If choosing the download option, you must view the ROP/ROC from our website; no copy will be sent to you.)

Date _____ **Name** _____ **Tel. No.** _____

Company _____

Street Address _____ **City** _____ **State** _____ **Zip** _____

Please indicate organization represented (if any) _____

1. (a) NFPA Document Title _____ **NFPA No. & Year** _____

(b) Section/Paragraph _____

2. Proposal Recommends (check one): ☐ new text ☐ revised text ☐ deleted text

3. Proposal (include proposed new or revised wording, or identification of wording to be deleted): [Note: Proposed text should be in legislative format, i.e., use underscore to denote wording to be inserted (inserted wording) and strike-through to denote wording to be deleted (~~deleted wording~~).]

4. Statement of Problem and Substantiation for Proposal: (Note: State the problem that would be resolved by your recommendation; give the specific reason for your Proposal, including copies of tests, research papers, fire experience, etc. If more than 200 words, it may be abstracted for publication.)

5. Copyright Assignment

(a) ☐ I am the author of the text or other material (such as illustrations, graphs) proposed in this Proposal.

(b) ☐ Some or all of the text or other material proposed in this Proposal was not authored by me. Its source is as follows (please identify which material and provide complete information on its source)**:**

_____

I hereby grant and assign to NFPA all and full rights in copyright in this Proposal and understand that I acquire no rights in any publication of NFPA in which this Proposal in this or another similar or analogous form is used. Except to the extent that I do not have authority to make an assignment in materials that I have identified in (b) above, I hereby warrant that I am the author of this Proposal and that I have full power and authority to enter into this assignment.

Signature (Required) _____

PLEASE USE SEPARATE FORM FOR EACH PROPOSAL • NFPA Fax: (617) 770-3500

Mail to: Secretary, Standards Council, National Fire Protection Association, 1 Batterymarch Park, Quincy, MA 02169-7471

8/29/2006

Copyright National Fire Protection Association
Provided by IHS under license with NFPA
No reproduction or networking permitted without license from IHS
Not for Resale