NFPA 286

Standard Methods of Fire Tests for Evaluating Contribution of Wall and Ceiling Interior Finish to Room Fire Growth

2006 Edition

NFPA, 1 Batterymarch Park, Quincy, MA 02169-7471
An International Codes and Standards Organization

Copyright National Fire Protection Association
Provided by IHS under license with NFPA
No reproduction or networking permitted without license from IHS

Not for Resale

IMPORTANT NOTICES AND DISCLAIMERS CONCERNING NFPA DOCUMENTS

NOTICE AND DISCLAIMER OF LIABILITY CONCERNING THE USE OF NFPA DOCUMENTS

NFPA codes, standards, recommended practices, and guides, of which the document contained herein is one, are developed through a consensus standards development process approved by the American National Standards Institute. This process brings together volunteers representing varied viewpoints and interests to achieve consensus on fire and other safety issues. While the NFPA administers the process and establishes rules to promote fairness in the development of consensus, it does not independently test, evaluate, or verify the accuracy of any information or the soundness of any judgments contained in its codes and standards.

The NFPA disclaims liability for any personal injury, property or other damages of any nature whatsoever, whether special, indirect, consequential or compensatory, directly or indirectly resulting from the publication, use of, or reliance on this document. The NFPA also makes no guaranty or warranty as to the accuracy or completeness of any information published herein.

In issuing and making this document available, the NFPA is not undertaking to render professional or other services for or on behalf of any person or entity. Nor is the NFPA undertaking to perform any duty owed by any person or entity to someone else. Anyone using this document should rely on his or her own independent judgment or, as appropriate, seek the advice of a competent professional in determining the exercise of reasonable care in any given circumstances.

The NFPA has no power, nor does it undertake, to police or enforce compliance with the contents of this document. Nor does the NFPA list, certify, test or inspect products, designs, or installations for compliance with this document. Any certification or other statement of compliance with the requirements of this document shall not be attributable to the NFPA and is solely the responsibility of the certifier or maker of the statement.

Copyright National Fire Protection Association
Provided by IHS under license with NFPA
No reproduction or networking permitted without license from IHS
Not for Resale

ADDITIONAL NOTICES AND DISCLAIMERS

Updating of NFPA Documents

Users of NFPA codes, standards, recommended practices, and guides should be aware that these documents may be superseded at any time by the issuance of new editions or may be amended from time to time through the issuance of Tentative Interim Amendments. An official NFPA document at any point in time consists of the current edition of the document together with any Tentative Interim Amendments and any Errata then in effect. In order to determine whether a given document is the current edition and whether it has been amended through the issuance of Tentative Interim Amendments or corrected through the issuance of Errata, consult appropriate NFPA publications such as the National Fire Codes® Subscription Service, visit the NFPA website at www.nfpa.org, or contact the NFPA at the address listed below.

Interpretations of NFPA Documents

A statement, written or oral, that is not processed in accordance with Section 6 of the Regulations Governing Committee Projects shall not be considered the official position of NFPA or any of its Committees and shall not be considered to be, nor be relied upon as, a Formal Interpretation.

Patents

The NFPA does not take any position with respect to the validity of any patent rights asserted in connection with any items which are mentioned in or are the subject of NFPA codes, standards, recommended practices, and guides, and the NFPA disclaims liability for the infringement of any patent resulting from the use of or reliance on these documents. Users of these documents are expressly advised that determination of the validity of any such patent rights, and the risk of infringement of such rights, is entirely their own responsibility.

NFPA adheres to applicable policies of the American National Standards Institute with respect to patents. For further information contact the NFPA at the address listed below.

Law and Regulations

Users of these documents should consult applicable federal, state, and local laws and regulations. NFPA does not, by the publication of its codes, standards, recommended practices, and guides, intend to urge action that is not in compliance with applicable laws, and these documents may not be construed as doing so.

Copyrights

This document is copyrighted by the NFPA. It is made available for a wide variety of both public and private uses. These include both use, by reference, in laws and regulations, and use in private self-regulation, standardization, and the promotion of safe practices and methods. By making this document available for use and adoption by public authorities and private users, the NFPA does not waive any rights in copyright to this document.

Use of NFPA documents for regulatory purposes should be accomplished through adoption by reference. The term "adoption by reference" means the citing of title, edition, and publishing information only. Any deletions, additions, and changes desired by the adopting authority should be noted separately in the adopting instrument. In order to assist NFPA in following the uses made of its documents, adopting authorities are requested to notify the NFPA (Attention: Secretary, Standards Council) in writing of such use. For technical assistance and questions concerning adoption of NFPA documents, contact NFPA at the address below.

For Further Information

All questions or other communications relating to NFPA codes, standards, recommended practices, and guides and all requests for information on NFPA procedures governing its codes and standards development process, including information on the procedures for requesting Formal Interpretations, for proposing Tentative Interim Amendments, and for proposing revisions to NFPA documents during regular revision cycles, should be sent to NFPA headquarters, addressed to the attention of the Secretary, Standards Council, NFPA, 1 Batterymarch Park, P.O. Box 9101, Quincy, MA 02269-9101.

For more information about NFPA, visit the NFPA website at www.nfpa.org.

--`,,```,,-`-`,,`,,`,`,,`---

Copyright National Fire Protection Association
Provided by IHS under license with NFPA
No reproduction or networking permitted without license from IHS

Not for Resale

Copyright © 2005, National Fire Protection Association, All Rights Reserved

NFPA 286

Standard Methods of

Fire Tests for Evaluating Contribution of Wall and Ceiling Interior Finish to Room Fire Growth

2006 Edition

This edition of NFPA 286, *Standard Methods of Fire Tests for Evaluating Contribution of Wall and Ceiling Interior Finish to Room Fire Growth*, was prepared by the Technical Committee on Fire Tests and acted on by NFPA at its June Association Technical Meeting held June 6–10, 2005, in Las Vegas, NV. It was issued by the Standards Council on July 29, 2005, with an effective date of August 18, 2005, and supersedes all previous editions.

This edition of NFPA 286 was approved as an American National Standard on August 18, 2005.

Origin and Development of NFPA 286

The 2000 edition was the first edition of this standard. This document was developed in response to activities associated with the regulation of interior finishes in NFPA *101*®, *Life Safety Code*®. The Fire Safety Technical Committee on Furnishings and Contents had proposed modifications to NFPA 265, *Standard Methods of Fire Tests for Evaluating Room Fire Growth Contribution of Textile Wall Coverings*, for the 1997 edition of NFPA *101*. These modifications would have established a test protocol that was not appropriate to the scope of NFPA 265. The NFPA 286 standard addresses those concerns associated with interior finishes that do not remain in place during testing to NFPA 255 test protocols.

The 2006 edition includes a complete editorial rewrite for compliance with the *Manual of Style for NFPA Technical Committee Documents*. Further organizational and editorial changes have been made to improve the application of the test method, particularly with regard to the test procedure. The purpose of the document has been revised to clarify the document's intent. Technical changes address recording and documentation of the fire test.

Copyright National Fire Protection Association
Provided by IHS under license with NFPA
No reproduction or networking permitted without license from IHS
Not for Resale

Technical Committee on Fire Tests

William E. Fitch, *Chair*
Omega Point Laboratories Inc., TX [RT]

Jesse J. Beitel, Hughes Associates, Inc., MD [SE]
April L. Berkol, Starwood Hotels and Resorts Worldwide, Inc., NY [U]
Rep. American Hotel and Lodging Association
Robert G. Bill, Jr., FM Global, MA [I]
John A. Blair, The DuPont Company, DE [M]
Rep. Society of the Plastics Industry, Inc.
Gordon H. Damant, Inter-City Testing and Consulting Corp. of California, CA [SE]
Thomas W. Fritz, Armstrong World Industries, Inc., PA [M]
Pravinray D. Gandhi, Underwriters Laboratories Inc., IL [RT]
James R. Griffith, Southwest Research Institute, TX [RT]
Gordon E. Hartzell, Hartzell Consulting, Inc., TX [SE]
Marcelo M. Hirschler, GBH International, CA [SE]
Alfred J. Hogan, Reedy Creek Improvement District, FL [E]
Rep. International Fire Marshals Association
William E. Koffel, Koffel Associates, Inc., MD [SE]
James R. Lawson, U.S. National Institute of Standards and Technology, MD [RT]
Rodney A. McPhee, Canadian Wood Council, Canada [M]
Frederick W. Mowrer, University of Maryland, MD [SE]
David T. Sheppard, U.S. Department of Justice, MD [RT]
Kuma Sumathipala, American Forest and Paper Association, DC [M]
T. Hugh Talley, Hugh Talley Company, TN [M]
Rep. Upholstered Furniture Action Council
Rick Thornberry, The Code Consortium, Inc., CA [SE]
William A. Webb, Schirmer Engineering Corporation, IL [I]
Robert A. Wessel, Gypsum Association, DC [M]
Robert J. Wills, American Iron and Steel Institute, AL [M]
Peter J. Willse, GE Global Asset Protection Services, CT [I]

Alternates

Robert M. Berhinig, Underwriters Laboratories Inc., IL [RT]
(Alt. to P. D. Gandhi)
Delbert F. Boring, Jr., American Iron and Steel Institute, OH [M]
(Alt. to R. J. Wills)
Richard J. Davis, FM Global, MA [I]
(Alt. to R. G. Bill)
Sam W. Francis, American Forest and Paper Association, PA [M]
(Alt. to K. Sumathipala)
Richard G. Gann, U.S. National Institute of Standards and Technology, MD [RT]
(Alt. to J. R. Lawson)
Paul A. Hough, Armstrong World Industries, Inc., PA [M]
(Alt. to T. W. Fritz)
Marc L. Janssens, Southwest Research Institute, TX [RT]
(Alt. to J. R. Griffith)
James K. Lathrop, Koffel Associates, Inc., CT [SE]
(Alt. to W. E. Koffel)
James A. Milke, University of Maryland, MD [SE]
(Alt. to F. W. Mowrer)
Arthur J. Parker, Hughes Associates, Inc., MD [SE]
(Alt. to J. J. Beitel)
Ronald A. Schulz, GE Global Asset Protection Services, MI [I]
(Alt. to P. J. Willse)
Ineke Van Zeeland, Canadian Wood Council, Canada [M]
(Alt. to R. A. McPhee)
Joe Ziolkowski, American Furniture Manufacturers Association, NC [M]
(Alt. to T. H. Talley)

Nonvoting

Robert H. Barker, American Fiber Manufacturers Association, VA [M]
(Alt. to Nonvoting Principal)
Tod L. Jilg, Hoechst Celanese Corporation, NC [M]
Rep. American Fiber Manufacturers Association
Rohit Khanna, U.S. Consumer Product Safety Commission, MD [C]

Milosh T. Puchovsky, NFPA Staff Liaison

This list represents the membership at the time the Committee was balloted on the final text of this edition. Since that time, changes in the membership may have occurred. A key to classifications is found at the back of the document.

NOTE: Membership on a committee shall not in and of itself constitute an endorsement of the Association or any document developed by the committee on which the member serves.

Committee Scope: This Committee shall have primary responsibility for documents on fire testing procedures, for reviewing existing fire test standards and recommending appropriate action to NFPA, for recommending the application of and advising on the interpretation of acceptable test standards for fire problems of concern to NFPA technical committees and members, and for acting in a liaison capacity between NFPA and the committees of other organizations writing fire test standards. This Committee does not cover fire tests that are used to evaluate extinguishing agents, devices, or systems.

Copyright National Fire Protection Association
Provided by IHS under license with NFPA
No reproduction or networking permitted without license from IHS
Not for Resale

Contents

Chapter 1 Administration **286–** 4
1.1 Scope **286–** 4
1.2 Purpose **286–** 4
1.3 Application **286–** 4

Chapter 2 Referenced Publications **286–** 5
2.1 General **286–** 5
2.2 NFPA Publications. (Reserved) **286–** 5
2.3 Other Publications **286–** 5
2.4 References for Extracts in Mandatory Sections **286–** 5

Chapter 3 Definitions **286–** 5
3.1 General **286–** 5
3.2 NFPA Official Definitions **286–** 5
3.3 General Definitions **286–** 5

Chapter 4 Test Equipment **286–** 5
4.1 Ignition Source **286–** 5
4.2 Geometry and Construction of the Fire Test Room **286–** 6

Chapter 5 Specimen Mounting **286–** 6
5.1 Specimen Mounting **286–** 6
5.2 Materials Using Substrates **286–** 7
5.3 Backing Materials **286–** 7
5.4 Acoustical Materials and Other Board Materials **286–** 8
5.5 Batt- or Blanket-Type Insulating and Other Flexible Materials **286–** 8
5.6 Building Units **286–** 8
5.7 Wall Covering Materials **286–** 8
5.8 Ceiling Lining Materials **286–** 8
5.9 Specimen Installation **286–** 8
5.10 Conditioning **286–** 9

Chapter 6 Environmental Conditions **286–** 9
6.1 Fire Test Room Environment **286–** 9

Chapter 7 Instrumentation **286–** 9
7.1 Fire Test Room Instrumentation **286–** 9
7.2 Canopy Hood and Exhaust Duct **286–**10
7.3 Instrumentation in Exhaust Duct **286–**11

Chapter 8 Calibration **286–**14
8.1 Calibration and Documentation of Ignition Source and Test Equipment **286–**14
8.2 Calibration Procedure **286–**14
8.3 Smoke Measurement Calibration **286–**15
8.4 Gas Analyzers Calibration **286–**15

Chapter 9 Test Procedure **286–**15
9.1 Procedure **286–**15

Chapter 10 Calculation Methods **286–**15
10.1 Mass Flow Rate **286–**15
10.2 Smoke Measurement Equations **286–**15
10.3 Release Rate of Combustion Gases **286–**15
10.4 Symbols **286–**16

Chapter 11 Report **286–**16
11.1 Report **286–**16
11.2 Discussion of Performance **286–**17

Annex A Explanatory Material **286–**17

Annex B Method of Determining Suitability of Oxygen Analyzers for Making Heat Release Measurements **286–**19

Annex C Informational References **286–**20

Index **286–**21

Copyright National Fire Protection Association
Provided by IHS under license with NFPA
No reproduction or networking permitted without license from IHS
Not for Resale

NFPA 286

Standard Methods of

Fire Tests for Evaluating Contribution of Wall and Ceiling Interior Finish to Room Fire Growth

2006 Edition

IMPORTANT NOTE: This NFPA document is made available for use subject to important notices and legal disclaimers. These notices and disclaimers appear in all publications containing this document and may be found under the heading "Important Notices and Disclaimers Concerning NFPA Documents." They can also be obtained on request from NFPA or viewed at www.nfpa.org/disclaimers.

NOTICE: An asterisk (*) following the number or letter designating a paragraph indicates that explanatory material on the paragraph can be found in Annex A.

A reference in brackets [ ] following a section or paragraph indicates material that has been extracted from another NFPA document. As an aid to the user, the complete title and edition of the source documents for extracts in mandatory sections of the document are given in Chapter 2 and those for extracts in informational sections are given in Annex C. Editorial changes to extracted material consist of revising references to an appropriate division in this document or the inclusion of the document number with the division number when the reference is to the original document. Requests for interpretations or revisions of extracted text shall be sent to the technical committee responsible for the source document.

Information on referenced publications can be found in Chapter 2 and Annex C.

Chapter 1 Administration

1.1* Scope. This standard describes a method for determining the contribution of interior finish materials to room fire growth during specified fire exposure conditions.

1.1.1 This method is intended for the evaluation of the flammability characteristics of wall and ceiling interior finish, other than textile wall coverings, where such materials constitute the exposed interior surfaces of buildings.

1.1.2 This fire test method is not intended for the evaluation of fire endurance of assemblies, nor is it intended for the evaluation of the effect of fires that originate within a wall assembly.

1.1.3 This standard specifies three types of specimen mounting, depending on the application of the interior finish material, as follows:

(1) Three walls (for interior finish to be used on walls only)
(2) Three walls and the ceiling (for interior finish to be used on walls and ceilings)
(3) The ceiling alone (for interior finish to be used on ceilings only)

1.2 Purpose.

1.2.1 This method of test measures certain fire performance characteristics of interior finish materials in an enclosure under specified fire exposure conditions.

1.2.2 This method of test determines the potential extent to which the interior finish materials contribute to fire growth in a room, including the heat and smoke released, the combustion products released, and the potential for fire spread beyond the room, under the particular conditions simulated.

1.2.3 The method of test provides the following:

(1) Extent of fire growth in the fire test room
(2) Rate of heat release by the specimen
(3) Total heat released by the specimen
(4) Time to flashover in the fire test room if flashover occurs
(5) Time to flame extension beyond the doorway of the fire test room if flame extension occurs
(6) Total heat flux incident to the floor of the fire test room
(7) Upper level gas temperature in the fire test room
(8) Smoke obscuration, as determined in the exhaust duct
(9) Production of carbon monoxide, as determined in the exhaust duct
(10) Emissions of other combustion gases, as determined in the exhaust duct

1.2.4 This method does not provide data that can be generalized to apply to rooms or spaces of different shapes, sizes, and ventilation.

1.2.5 The performance observed in the test is based on the test conditions.

1.2.6 If a test specimen is exposed to a different environment, as in an actual fire, the performance of the specimen can be different.

1.2.7 The method of test does not provide the following:

(1) Full information concerning toxicity of combustion gases
(2) Fire resistance of wall–ceiling systems

1.3 Application.

1.3.1 The specimen is tested by using the ignition source described in 1.3.10.

1.3.2 Ceiling finish materials are tested mounted on the ceiling only.

1.3.3 For materials intended for use only as interior wall finish, the specimen is mounted on three walls of the fire test room.

1.3.4 For materials intended for use as interior wall and ceiling finish, the specimen is mounted on three walls and on the ceiling of the fire test room.

1.3.5 These methods use a gas burner to produce a diffusion flame to expose the walls in the corner of a fire test room 2.44 m × 3.66 m × 2.44 m (8 ft × 12 ft × 8 ft).

1.3.6 The burner produces a prescribed rate of heat output, as described in 1.3.10.

1.3.7 The contribution of the interior finish material to fire growth is measured by constant monitoring of the following:

(1) Incident heat flux on the center of the floor
(2) Temperature of the gases in the upper part of the fire test room
(3) Rate of heat release
(4) Smoke release
(5) Time to flashover

1.3.8 The test is conducted with natural ventilation to the fire test room provided through a single doorway that is 0.78 m × 2.02 m (30.75 in. × 79.50 in.).

Copyright National Fire Protection Association
Provided by IHS under license with NFPA
No reproduction or networking permitted without license from IHS
Not for Resale

1.3.9 The combustion products are collected in a hood that feeds into a plenum connected to an exhaust duct in which measurements of the gas velocity, temperature, smoke obscuration, and concentrations of selected gases are made.

1.3.10* The ignition source is a gas burner that is capable of supplying a net rate of heat output of 40 kW for 5 minutes followed by 160 kW for 10 minutes, for a total exposure period of 15 minutes.

1.3.11 Flashover is considered to have occurred when any two of the following conditions have been attained:

(1) Heat release rate exceeds 1 MW
(2) Heat flux at the floor exceeds 20 kW/m^2
(3) Average upper layer temperature exceeds 600°C (1112°F)
(4) Flames exit doorway
(5) Autoignition of a paper target on the floor occurs

Chapter 2 Referenced Publications

2.1 General. The documents or portions thereof listed in this chapter are referenced within this standard and shall be considered part of the requirements of this document.

2.2 NFPA Publications. (Reserved)

2.3 Other Publications.

2.3.1 ASTM Publication. American Society for Testing and Materials, 100 Barr Harbor Drive, West Conshohocken, PA 19428-2959.

ASTM C 36, *Standard Specification for Gypsum Wallboard*, 1995.

2.3.2 Other Publication.

Merriam-Webster's Collegiate Dictionary, 11th edition, Merriam-Webster, Inc., Springfield, MA, 2003.

2.4 References for Extracts in Mandatory Sections.

NFPA 265, *Standard Methods of Fire Tests for Evaluating Room Fire Growth Contribution of Textile Coverings on Full Height Panels and Walls,* 2002 edition.

Chapter 3 Definitions

3.1 General. The definitions contained in this chapter shall apply to the terms used in this standard. Where terms are not defined in this chapter or within another chapter, they shall be defined using their ordinarily accepted meanings within the context in which they are used. *Merriam-Webster's Collegiate Dictionary,* 11th edition, shall be the source for the ordinarily accepted meaning.

3.2 NFPA Official Definitions.

3.2.1 Shall. Indicates a mandatory requirement.

3.2.2 Should. Indicates a recommendation or that which is advised but not required.

3.2.3 Standard. A document, the main text of which contains only mandatory provisions using the word "shall" to indicate requirements and which is in a form generally suitable for mandatory reference by another standard or code or for adoption into law. Nonmandatory provisions shall be located in an appendix or annex, footnote, or fine-print note and are not to be considered a part of the requirements of a standard.

3.3 General Definitions.

3.3.1 Average Upper Gas Layer Temperature. Temperature based on the average of the four ceiling quadrant thermocouples and the center of the room ceiling thermocouple. [**265,** 2002]

Chapter 4 Test Equipment

4.1 Ignition Source.

4.1.1* The ignition source for the test shall be a gas burner with a nominal 305 mm × 305 mm (nominal 12 in. × 12 in.) porous top surface consisting of a refractory material, as shown in Figure 4.1.1.

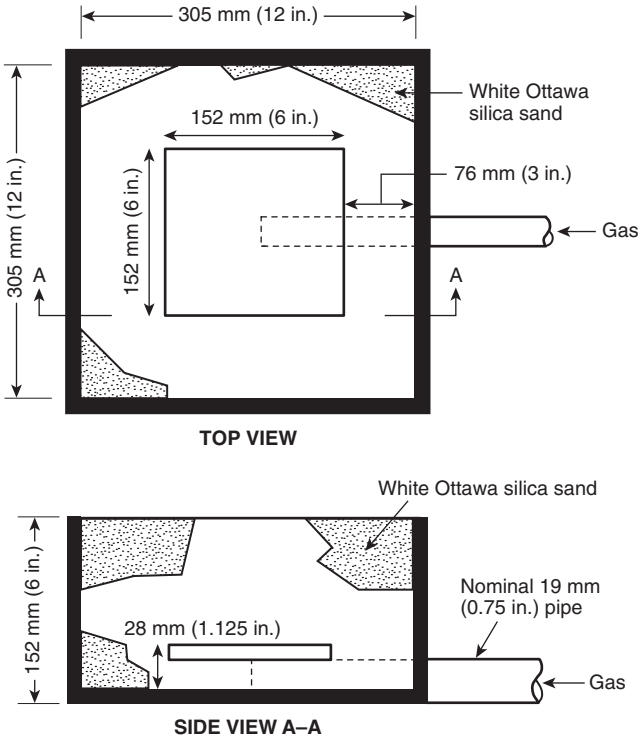

FIGURE 4.1.1 Gas Burner.

4.1.1.1 The refractory material specified in 4.1.1, through which the gas is supplied, shall be either of the following:

(1) A nominal 25 mm (nominal 1 in.) thick porous ceramic fiberboard over a 152 mm ± 5 mm (6 in. ± 0.2 in.) plenum
(2) A minimum 102 mm (4 in.) layer of Ottawa sand used to provide the horizontal surface through which the gas is supplied

4.1.1.2 A burner using a layer of sand as specified in 4.1.1.1(2) shall be used for test specimens with a potential for dripping.

4.1.2 The top surface of the burner through which the gas is applied shall be located horizontally 300 mm ± 50 mm (12 in. ± 2 in.) above the floor.

4.1.2.1 The burner enclosure shall be in contact with both walls in a corner of the fire test room, opposite from the door.

Copyright National Fire Protection Association
Provided by IHS under license with NFPA
No reproduction or networking permitted without license from IHS
Not for Resale

4.1.2.2 The edge of the diffusion surface shall be located 25 mm ± 0.3 mm (1 in. ± 0.1 in.) from the wall.

4.1.3 The gas supply to the burner shall be of C.P. grade propane (99 percent purity).

4.1.3.1 Flow rates of gas shall be calculated using a net heat of combustion of propane of 85 MJ/m^3 (2280 Btu/ft^3) at standard conditions of 101 kPa (absolute pressure of 14.7 psi) pressure and 20°C (68°F) temperature.

4.1.3.2 The gas flow rate shall be metered throughout the test, with an accuracy of at least ±3 percent.

4.1.3.3 The heat output to the burner shall be controlled within ±5 percent of the prescribed value.

4.1.4* The gas supply to the burner shall produce a net heat output of 40 kW ± 1 kW for the first 5 minutes, followed by a net heat output of 160 kW ± 5 kW for the next 10 minutes.

4.1.5 The burner design shall allow switching from the first fixed net heat output of 40 kW to the second fixed net heat output of 160 kW within 10 seconds.

4.1.6 Burner controls shall be provided for automatic shutoff of the gas supply if flameout occurs.

4.1.7 The burner shall be ignited by a pilot burner or a remotely controlled spark igniter.

4.2 Geometry and Construction of the Fire Test Room.

4.2.1* The interior dimensions of the floor of the fire test room, when the specimens are in place, shall be as shown in Figure 4.2.1 and shall measure 2.44 m ± 0.05 m × 3.66 m ± 0.05 m (8 ft ± 2 in. × 12 ft ± 2 in.).

4.2.1.1 The finished ceiling shall be 2.44 m ± 0.05 m (8 ft ± 2 in.) above the floor.

4.2.1.2 There shall be four walls at right angles defining the fire test room as shown in Figure 4.2.1.

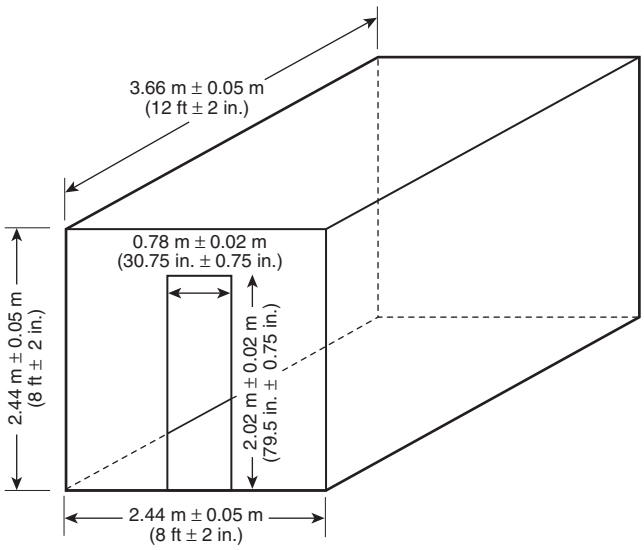

FIGURE 4.2.1 Interior Fire Test Room Dimensions and Interior Doorway Dimensions.

4.2.2* The fire test room shall be placed indoors in a draft-free, heated space that is large enough to ensure that the surroundings do not influence the test fire.

4.2.3 There shall be a 0.78 m ± 0.02 m × 2.02 m ± 0.02 m (30.75 in. ± 0.75 in. × 79.50 in. ± 0.75 in.) doorway in the center of one of the 2.44 m × 2.44 m (8 ft × 8 ft) walls, and there shall be no other wall, floor, or ceiling openings that allow ventilation.

4.2.4* The fire test room shall meet the following criteria:

(1) The room shall be a framed (with wood or metal studs) or concrete block structure.
(2) The inside surface of the walls, ceiling, and floor shall be of calcium silicate board of 500 kg/m^3 to 800 kg/m^3 (31 lb/ft^3 to 50 lb/ft^3) density and shall be a minimum of 12 mm (0.5 in.) in nominal thickness or shall be of fire-rated (Type X) gypsum wallboard that is at least 12 mm (0.5 in.) in nominal thickness.

4.2.5 The door frame shall be constructed such that it remains unchanged during the test period to a tolerance of ±1 percent in height and width.

Chapter 5 Specimen Mounting

5.1 Specimen Mounting.

5.1.1* Test specimens shall be mounted on a framing or support system that is comparable to that intended for their actual field use, using substrates, backing materials, insulation, or air gaps as appropriate to the intended application, and representing a typical value of thermal resistance for the wall system.

5.1.2 If a manufacturer specifies the use of an adhesive, then specimens shall be mounted using the adhesive and the application rate specified by the manufacturer and shall be comparable to actual field installations.

5.1.3* Mounting methods shall be grouped according to materials to be tested, which are categorized either by their usage or by the form of the material.

5.1.3.1 The mountings shall be described for test method uniformity and for good laboratory practice.

5.1.3.2 The mountings shall not imply restriction in the specific details of field installation.

5.1.3.3 The mountings shall be used for general material testing for which the specific details of the field installation either have not been established or are so broad that any single installation method is not representative of the full range of installation possibilities.

5.1.4 Where an interior finish material exhibits a distinct direction, the sample shall be mounted such that the distinct direction is vertical, unless the manufacturer indicates that a different method of mounting will be used in actual installations.

5.1.5 If the product to be tested is in panel form, the standard dimensions (width, length, and thickness) of the panels shall be used.

Copyright National Fire Protection Association
Provided by IHS under license with NFPA
No reproduction or networking permitted without license from IHS
Not for Resale

5.1.6 If panels are tested in other than panel form, the rationale for the change shall be stated in the report.

5.1.7 A detailed description of the mounting method used shall be given in the test report.

5.1.8 If a special mounting technique is used in order to improve the physical behavior of the specimen during the test, it shall be clearly stated in the report.

5.2 Materials Using Substrates.

5.2.1 Thin surface materials, thermoplastic products that melt, paints, and varnishes shall be applied, depending on their end use, to one of the substrates identified in 5.2.1.2 through 5.2.1.4.

5.2.1.1 When mounted on substrates described in 5.2.1.2 and 5.2.1.4, materials that use studs for support in an actual installation shall not be required to incorporate studs and the associated airspace in the test specimen.

5.2.1.2 The following substrates shall be acceptable:

(1) Noncombustible fiber-reinforced silicate board with a dry density of 680 kg/m^3 ± 50 kg/m^3 (42 lb/ft^3 ± 3 lb/ft^3), at a thickness of 9 mm to 13 mm (⅜ in. to ½ in.)
(2) Noncombustible board with a dry density of 1650 kg/m^3 ± 150 kg/m^3 (103 lb/ft^3 ± 9 lb/ft^3), at a thickness of 9 mm to 13 mm (⅜ in. to ½ in.)
(3) Ordinary particleboard with a density of 680 kg/m^3 ± 50 kg/m^3 (42 lb/ft^3 ± 3 lb/ft^3) at normal conditioning atmosphere of 50 ± 5 percent relative humidity and 23°C ± 2°C (73°F ± 4°F) temperature, at a thickness of 9 mm to 13 mm (⅜ in. to ½ in.)
(4)*Gypsum wallboard, complying with ASTM C 36, *Standard Specification for Gypsum Wallboard*, at a thickness of 12.7 mm to 15.9 mm (½ in. to ⅝ in.)

5.2.1.3* Other substrates shall be acceptable if the end use of the product requires them.

5.2.1.4 The use of alternative substrates as permitted by 5.2.1.3 shall be justified in the report.

5.2.2 Paints and varnishes shall be applied to the substrate with the application rate specified by the sponsor.

5.2.3 Coating materials, such as cementitious mixtures, mastic coatings, sprayed fibers, or similar materials, shall be mixed and applied to the substrate board as specified in the manufacturer's instructions at the thickness, coverage rate, or density recommended by the manufacturer.

5.2.4 Coating intended for application to a wood surface shall be applied to a substrate as specified in 5.2.1.2(2).

5.2.5 Coating materials intended for application to specific combustible surfaces other than wood shall meet the following criteria:

(1) They shall be applied to the specific surface for which they are intended.
(2) The coating material and combustible material shall be attached to the substrate board as specified in 5.2.1.

5.2.6 Coating materials intended for application only to noncombustible surfaces shall be applied to a substrate as specified in 5.2.1.2(1) or 5.2.1.2(2).

5.3 Backing Materials.

5.3.1 Whenever calcium silicate board or gypsum wallboard is specified as a backing substrate in this standard, the material shall be as described in 5.2.1.

5.3.2 All backing materials, when used, shall be supported on a framed support system as shown in Figure 5.3.2.

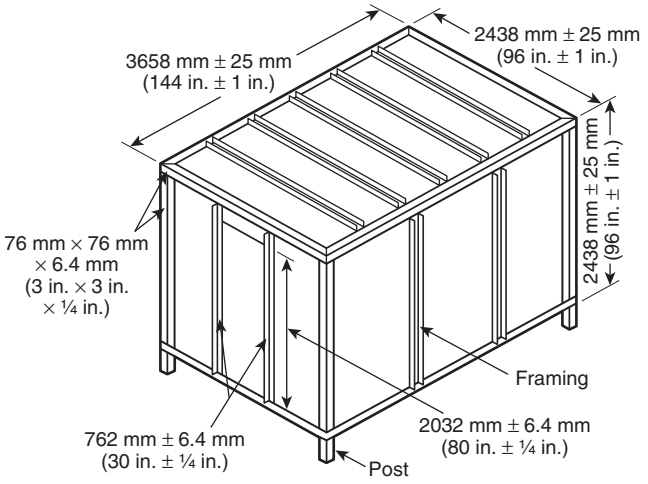

FIGURE 5.3.2 Steel Frame Support System.

5.3.3 When metal screws in combination with washers and wing nuts are specified for fastening, they shall be one of the following:

(1) Standard 6.35 mm (¼ in.) by 0.8 threads per mm [20 threads per in. (TPI)]
(2) Round-head steel machine screws, 6.35 mm (¼ in.) by 0.8 threads per mm (20 TPI) steel wing nuts
(3) 51 mm (2 in.) outside diameter by 1 mm (0.044 in.) thick flat steel washers with a 7 mm (9⁄32 in.) inside diameter hole

5.3.4 Fastening screws shall be installed as shown in Figure 5.3.4.

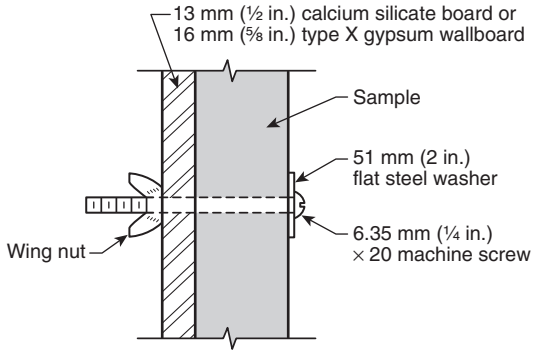

FIGURE 5.3.4 Material Fastening Technique.

Copyright National Fire Protection Association
Provided by IHS under license with NFPA
No reproduction or networking permitted without license from IHS
Not for Resale

5.3.5 The fastening pattern shall be as shown in Figure 5.3.5(a) for rigid wall materials, and in Figure 5.3.5(b) for flexible wall materials.

5.3.6 The fastening pattern for all ceiling materials shall be as shown in Figure 5.3.6.

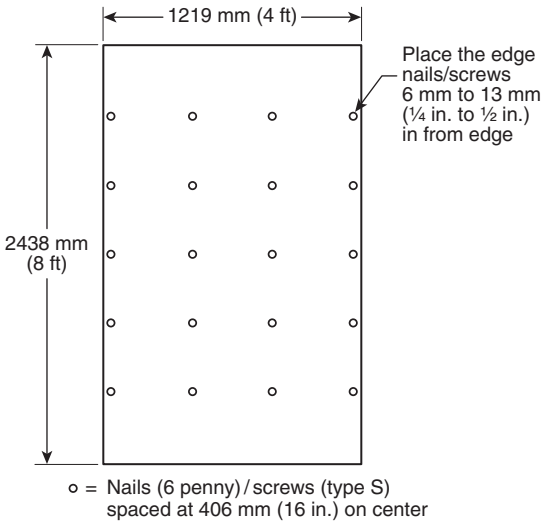

FIGURE 5.3.5(a) Attachment Details for Rigid Wall Materials.

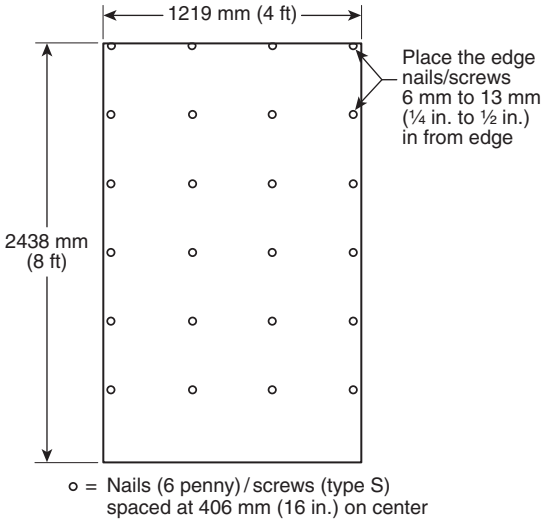

FIGURE 5.3.5(b) Attachment Details for Flexible Wall Materials.

5.4 Acoustical Materials and Other Board Materials.

5.4.1 Depending on the type of field mounting required by the acoustical product, either wood furring strips or metal runners shall be used to support acoustical material.

5.4.2 Metal runners for mounting shall be attached to the substrate to replicate the field suspension systems application.

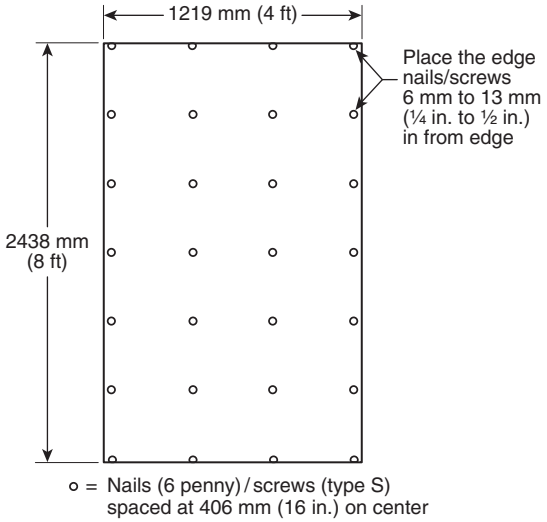

FIGURE 5.3.6 Attachment Details for Ceiling Materials.

5.4.3 Wood furring strips for mounting acoustical materials and other board materials shall be nominal 25 mm × 50 mm (nominal 1 in. × 2 in.) wood furring strips and attached to a substrate to replicate the field installation.

5.5 Batt- or Blanket-Type Insulating and Other Flexible Materials. Batt- or blanket-type and other flexible materials that do not have sufficient rigidity or strength to support themselves shall be supported by round-head machine screws in combination with wing nuts and flat washers, as specified in 5.3.2, which are inserted through the material in such a way as to fasten the material to a substrate board.

5.6* Building Units.

5.6.1 If building units have sufficient structural integrity to support themselves, no additional mounting to a substrate board support shall be required.

5.6.2 If the building units are of such construction that they require individual components that are not self-supporting, the component shall be fastened to the substrate board as specified in 5.3.2.

5.7 Wall Covering Materials.

5.7.1 Wall coverings, such as vinyl coatings and wallpaper, shall be mounted using one of the following methods:

(1) On gypsum wallboard, as specified in 5.2.1.2(4)
(2) On the actual substrate to which they are to be applied for actual use according to the adhesive and application technique specified by the manufacturer

5.7.2 Where a wall covering has a distinct directionality, the sample shall be mounted such that the machine direction is vertical, unless the manufacturer indicates that a different method of mounting will be used in actual installations.

5.8 Ceiling Lining Materials. Materials intended only for lining ceilings shall be mounted only on the ceiling.

5.9 Specimen Installation.

5.9.1 For materials intended for use only as interior wall finish, the specimen shall be mounted as follows:

Copyright National Fire Protection Association
Provided by IHS under license with NFPA
No reproduction or networking permitted without license from IHS
Not for Resale

(1) The specimen shall be mounted to cover three walls completely but shall not be mounted on the wall containing the door.
(2) The specimen shall be mounted to cover fully both 2.44 m × 3.66 m (8 ft × 12 ft) walls and the 2.44 m × 2.44 m (8 ft × 8 ft) wall that does not contain the door.

5.9.2 For materials intended for use as interior wall and ceiling finish, the specimen shall be mounted on all three walls, as stated in 5.9.1, and it shall also be mounted to cover the entire ceiling.

5.9.3 For materials intended for use only as an interior ceiling finish and not to be installed on any of the walls of the fire test room, the specimen shall be mounted to cover the entire ceiling.

5.10* Conditioning. Prior to testing, the mounted specimen shall be conditioned to equilibrium in an atmosphere at a temperature of 21°C ± 3°C (70°F ± 5°F) and a relative humidity of 50 percent ± 5 percent.

5.10.1 Equilibrium shall be considered to be reached when a representative piece of the specimen has achieved constant mass.

5.10.2 Constant mass shall be considered to be reached when two successive weighing operations, carried out at an interval of 24 hours, do not differ by more than 0.1 percent of the mass of the test piece or by more than 0.1 g, whichever is greater.

5.10.3 Specimens shall be tested as soon as possible after removal from such conditions if test room conditions differ from those required in Section 5.10 through 5.10.2 *(see 6.1.3)*.

5.10.4 The time between removal from the conditioning room and start of testing shall be reported.

Chapter 6 Environmental Conditions

6.1 Fire Test Room Environment.

6.1.1 The test building in which the fire test room is located shall have vents for the discharge of combustion products and shall have provisions for fresh air intake so that no oxygen-deficient air is introduced into the fire room during the test.

6.1.1.1 Prior to the start of the test, the ambient air at the mid-height entrance to the fire test room shall have a velocity of less than 0.5 m/sec (100 ft/min) in any direction, as measured at a horizontal distance of 1 m ± 0.1 m (3.3 ft ± 0.3 ft) from the center of the doorway.

6.1.1.2 The building shall be of a size adequate to prevent smoke accumulation in the building below the level of the top of the fire test room.

6.1.2 The ambient temperature in the test building at locations around the fire test room shall be in the range of 20°C ± 10°C (68°F ± 18°F), and the relative humidity shall be less than 75 percent for the duration of the test.

6.1.3 If test specimens are installed within the fire test room for 2 hours or more prior to test, the following ambient conditions shall be maintained:

(1) The ambient temperature in the fire test room, measured by one of the thermocouples in 7.1.2.4, shall be in the range of 18°C to 24°C (64°F to 75°F).
(2) The ambient relative humidity in the fire test room shall be 50 percent ± 5 percent.

Chapter 7 Instrumentation

7.1 Fire Test Room Instrumentation. The instrumentation described in 7.1.1 through 7.1.4 shall be provided for this test.

7.1.1* Heat Flux. A total heat flux gauge (calorimeter) shall be mounted at a height of 26 mm ± 25 mm (1.1 in. ± 0.9 in.) above the floor surface, facing upward, in the geometric center of the fire test room, as shown in Figure 7.1.1.

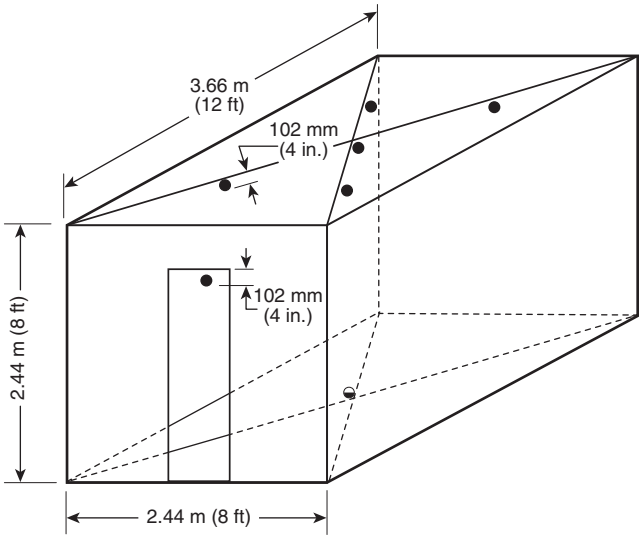

FIGURE 7.1.1 Thermocouple and Calorimeter Placement.

7.1.1.1* The heat flux gauge shall be of the Schmidt–Boelter (thermopile) type, with a full-scale design range of 50 kW/m^2.

7.1.1.1.1 The gauge target shall be a circular flat surface that is not more than 15 mm (0.6 in.) in diameter and is coated with a durable matte black finish, having a view angle of 180 degrees.

7.1.1.1.2 The target shall be contained within a water-cooled body in which the front face is of highly polished metal, flat, coinciding with the plane of the target, and circular, with a diameter of not more than 50 mm ± 2 mm (2 in. ± 0.1 in.).

7.1.1.1.3 The heat flux gauge shall have an accuracy of at least ±3 percent and a repeatability within 0.5 percent.

7.1.1.1.4 In operation, the heat flux gauge shall be maintained at a constant temperature, within 3°C (5°F) above the dew point, by water supplied at a temperature of 50°C to 65°C (122°F to 149°F).

7.1.1.2 The heat flux gauge shall be calibrated whenever required with two similar instruments held as reference standards that are not used for any other purpose.

7.1.1.3 One of the instruments specified in 7.1.1.2 shall be fully calibrated at yearly intervals.

7.1.2* Thermocouples. Bare Type K Chromel–Alumel thermocouples, 0.50 mm ± 0.05 mm (20 mil ± 2 mil) in diameter, shall be used at each required location.

Copyright National Fire Protection Association
Provided by IHS under license with NFPA
No reproduction or networking permitted without license from IHS
Not for Resale

7.1.2.1 The thermocouple wire, within 13 mm (0.5 in.) of the bead, shall be run along expected isotherms to minimize conduction errors.

7.1.2.2 The insulation between the Chromel–Alumel wires shall be stable to at least 1100°C (2000°F), or the wires shall be separated.

7.1.2.3 A thermocouple shall be located in the interior plane of the door opening on the door centerline, 10 mm ± 2 mm (4 in. ± 0.8 in.) below the top of the door opening, as shown in Figure 7.1.1.

7.1.2.4 Thermocouples shall be located at the following six positions 10 mm ± 2 mm (4 in. ± 0.8 in.) below the ceiling:

(1) At the center of the ceiling
(2) At the center of each of the four ceiling quadrants
(3) Directly over the center of the ignition burner

7.1.2.5 The thermocouples shall be mounted on supports or shall penetrate through the ceiling with their junctions 10 mm ± 2 mm (4 in. ± 0.8 in.) away from a solid surface as shown in Figure 7.1.1.

7.1.2.6 There shall be no attachments to the test specimens.

7.1.2.7 Any ceiling penetration shall be just large enough to allow passage of the thermocouples.

7.1.2.8 Spackling compound or ceramic fiber insulation shall be used to backfill the holes around the thermocouple wire.

7.1.3 Target Flashover Indicators.

7.1.3.1 Two paper target flashover indicators shall be placed on the floor of the test room, as shown in Figure 7.1.3.1.

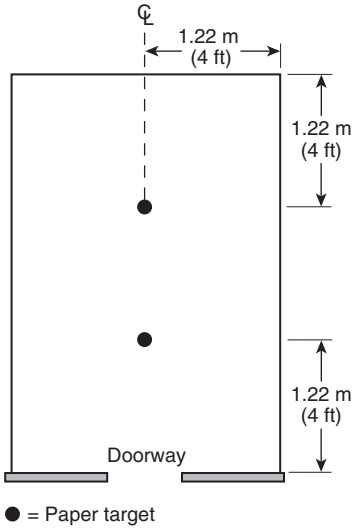

FIGURE 7.1.3.1 View of Paper Target Arrangement.

7.1.3.2 The targets shall consist of a single piece of newsprint crumpled into a ball approximately 150 mm (6 in.) in diameter.

7.1.4 Photographic Equipment. Video and photographic equipment shall be used to record the spread of fire and generation of smoke in the fire test room and the fire projection from the door of the fire test room.

7.1.4.1 Location and Level of Lighting in Test Room. A nominal 300-watt flood-type, quartz halogen lamp shall be positioned in the corner diametrically opposite the burner, near the floor level. The lamp shall be aimed at the wall corner/ceiling intersection above the burner.

7.1.4.2 Wall Markings. The interior wall surfaces of the fire test room adjacent to the corner in which the burner is located shall be marked with a 0.3 m (12 in.) grid.

7.1.4.3 Ceiling Material Above a Burner. For each test, when the test is for wall systems only, a new section of uncoated and unpainted nominal 16 mm (⅝ in.) gypsum wallboard, 610 mm ± 10 mm × 610 mm ± 10 mm (2 ft × 2 ft), shall be installed in the ceiling at the wall corner intersection directly above the burner.

7.1.4.4 Video Recording. A video camera with a manually adjustable iris, adjusted to prevent automatic closing of this iris opening due to brightness of the fire (at least 50 percent open), shall be used.

7.1.4.4.1 A video monitor shall be used to determine when adjustments and compensation for the brightness of the ignition flames are needed.

7.1.4.4.2 The camera mount shall be adjusted so that the camera lens is approximately 900 mm (3 ft) from the floor.

7.1.4.4.3 The camera angle and magnification shall be adjusted until the top of the doorway and the top of the burner are visible and the ceiling area directly above the fire is in full view.

7.1.4.4.4 A timer depicting "elapsed time" shall be included in all videos. The timer shall be permitted to be integral to the video camera. The timer shall be clearly viewed throughout the test period.

7.1.4.4.5 Prior to ignition of the burner, the date and laboratory test report identification number shall be filmed. The video shall be started at least 30 seconds prior to ignition of the burner, and the video recording shall be continuous for the duration of the test period.

7.1.4.5 Photographic Documentation. A photographic record (still pictures) of the test shall be made.

7.1.4.5.1 A timer depicting "elapsed time" shall be included in all photographs. The timer shall be permitted to be integral to the camera. The timer shall be clearly viewed throughout the test period.

7.1.4.5.2 Prior to ignition of the burner, the date and laboratory test report identification number shall be filmed. Color slides, photographs, or digital images shall be taken at intervals not exceeding 15 seconds for the first 3 minutes of the test and at intervals not exceeding 30 seconds thereafter for the duration of the test.

7.2 Canopy Hood and Exhaust Duct.

7.2.1 A hood shall be installed immediately adjacent to the door of the fire test room, as shown in Figure 7.2.1.

7.2.1.1 The bottom of the hood shall be level with the top surface of the fire test room.

7.2.1.2 The face dimensions of the hood shall be at least 2.44 m × 2.44 m (8 ft × 8 ft), and the depth shall be 1.1 m ± 0.1 m (3.5 ft ± 4 in.).

Copyright National Fire Protection Association
Provided by IHS under license with NFPA
No reproduction or networking permitted without license from IHS
Not for Resale

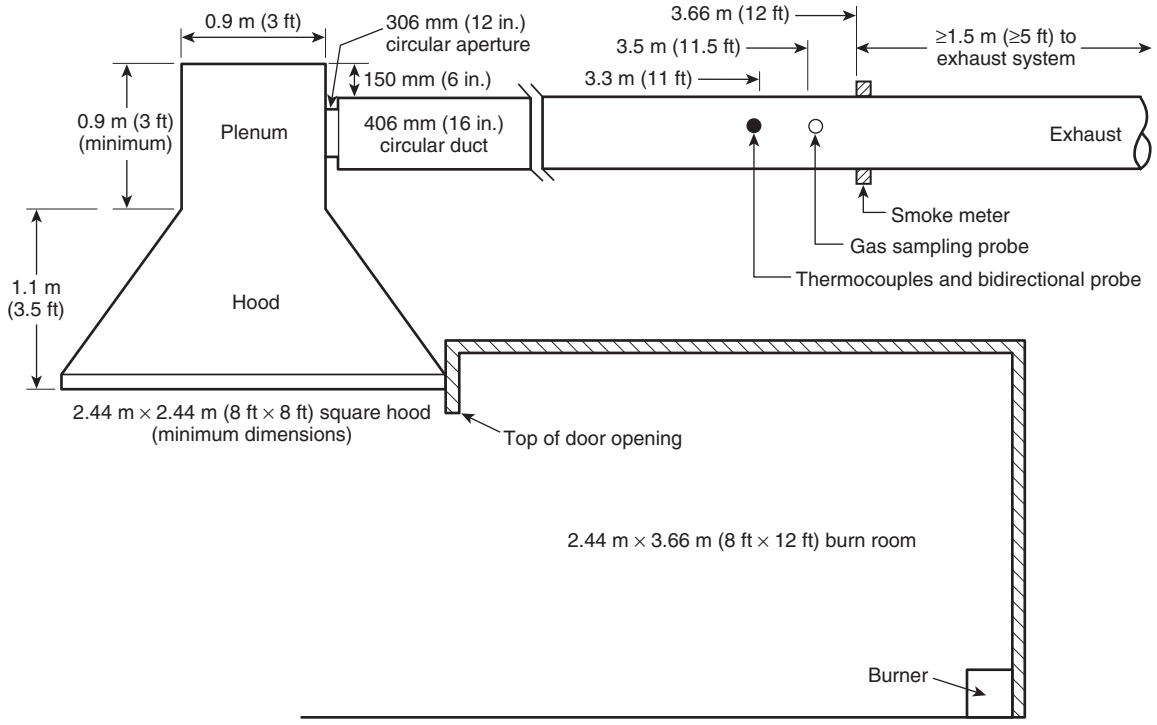

FIGURE 7.2.1 Canopy Hood and Exhaust Duct.

7.2.1.3 The hood shall feed into a plenum that has a 0.92 m ± 0.10 m × 0.92 m ± 0.1 m (3 ft ± 4 in. × 3 ft ± 4 in.) cross section, as shown in Figure 7.2.1.3.

7.2.1.4 The plenum shall have a minimum height of 0.92 m (3 ft).

7.2.1.5 The plenum height shall be permitted to be increased to a maximum of 1.8 m (5 ft 11 in.) to satisfy building constraints.

7.2.1.6 The exhaust duct connected to the plenum shall be horizontal and at least 406 mm (16 in.) in diameter, and it shall be permitted to have a circular aperture of at least 306 mm (12 in.) at its entrance or at mixing vanes in the duct.

7.2.2* The hood shall have the capability to collect all the combustion products leaving the fire test room.

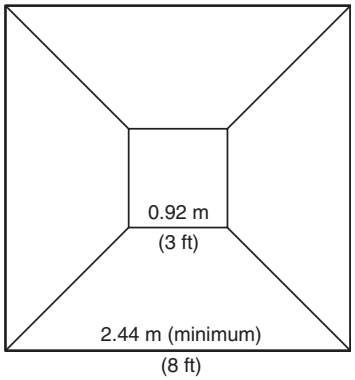

FIGURE 7.2.1.3 Plan View of Canopy Hood.

7.2.3* An alternative exhaust system design shall be permitted to be used if it has been shown to produce equivalent results by meeting the calibration requirements outlined in Chapter 8.

7.3 Instrumentation in Exhaust Duct.

7.3.1 Exhaust Collection System. The exhaust collection system shall be constructed with at least the following items:

(1) Blower
(2) Steel hood
(3) Duct
(4) Bidirectional probe
(5) Thermocouple(s)
(6) Oxygen measurement system
(7) Smoke obscuration measurement system (white light photocell lamp/detector or laser)
(8) Combustion gas sampling and analysis system

7.3.2* Bidirectional Probe. A bidirectional probe, as shown in Figure 7.3.2, or an equivalent measuring system shall be used to measure gas velocity in the duct.

7.3.2.1 The probe shall consist of a short, stainless steel cylinder that is 44 mm ± 1 mm long and of 22 mm ± 1 mm inside diameter (1.75 in. ± 0.0625 in. long and of 0.875 in. ± 0.0625 in. inside diameter) with a solid diaphragm in the center.

7.3.2.2 The pressure taps on either side of the diaphragm shall support the probe.

7.3.2.3 The axis of the probe shall run along the centerline of the duct 3.35 m ± 0.1 m (11 ft ± 4 in.), downstream from the entrance.

7.3.2.4* The pressure taps specified in 7.3.2.2 shall be connected to a pressure transducer that is able to resolve pressure differences of 0.25 Pa (0.001 psi water column).

Copyright National Fire Protection Association
Provided by IHS under license with NFPA
No reproduction or networking permitted without license from IHS
Not for Resale

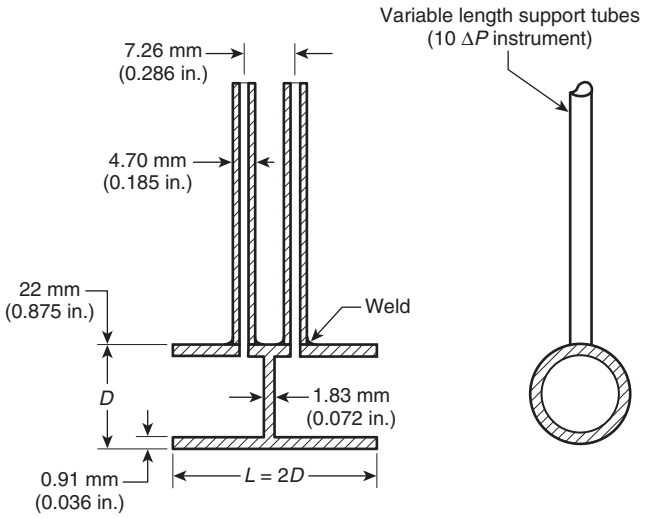

FIGURE 7.3.2 Bidirectional Probe.

7.3.2.5 The response time to a stepwise change of the duct flow rate shall not exceed 5 seconds to reach 90 percent of the final value.

7.3.3 Thermocouples.

7.3.3.1 One pair of thermocouples shall be placed 3.40 m ± 0.1 m (11 ft 2 in. ± 4 in.) downstream of the entrance to the horizontal duct and 50 mm ± 5 mm (2 in. ± 0.2 in.) downstream from the axis of the probe.

7.3.3.2 The pair of thermocouples specified in 7.3.3 shall straddle the center of the duct and be separated by 50 mm ± 5 mm (2 in. ± 0.2 in.) from each other *(see Figure 7.2.1.)*

7.3.4* Sampling Line.

7.3.4.1 The sampling line tubes shall be constructed of a material not influencing the concentration of the combustion gas species to be analyzed.

7.3.4.2 The sequence of the gas train, as shown in Figure 7.3.4.2, shall be as follows:

(1) Sampling probe
(2) Soot filter
(3) Cold trap
(4) Gas path pump
(5) Vent valve
(6) Plastic drying column and carbon dioxide removal columns (if used)
(7) Flow controller
(8) Oxygen analyzer

7.3.4.3 The gas train shall also include appropriate spanning and zeroing facilities.

7.3.4.4* The cold trap, or cooling column, in the gas train shall be used to remove water from the combustion gases.

7.3.4.5* For each gas analyzer used, the system delay time (or time shift) for the analyzer to reach a 90 percent response to a step change in the gas concentration shall be determined before testing.

7.3.5 Oxygen Concentration. A gas sampling tube shall be located 3.5 m ± 0.1 m (11.5 ft ± 3 in.) downstream from the entrance to the duct at the geometric center of the duct [to within 10 mm (0.4 in.) of the center] and 150 mm ± 5 mm (6 in. ± 0.2 in.) downstream from the axis of the probe.

7.3.5.1 The gas sampling tube specified in 7.3.5 shall be used to obtain a continuously flowing sample for determining the oxygen concentration of the exhaust gas as a function of time.

7.3.5.2 A suitable filter and cold trap shall be placed in the line ahead of the analyzer to remove particulates and water.

7.3.5.3 The oxygen analyzer shall be of the paramagnetic or polarographic type and shall be capable of measuring oxygen concentration in a range of 21 percent to 15 percent, with a relative accuracy of 100 ppm in this concentration range.

7.3.5.4 The signal from the oxygen analyzer shall be within 5 percent of its final value and occur within 30 seconds of introducing a step change in composition of the gas stream flowing past the inlet to the sampling tube.

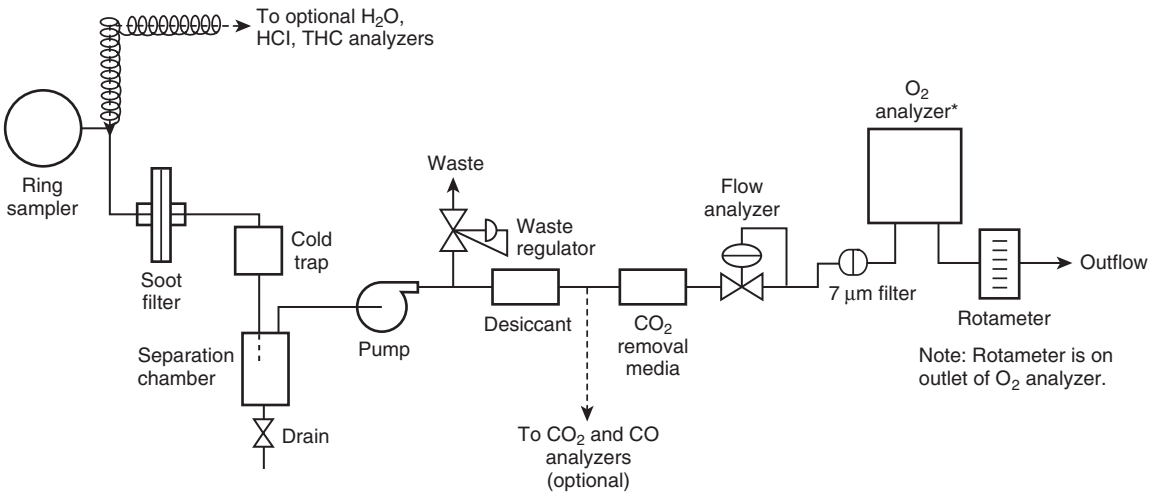

* To include absolute pressure transducer

FIGURE 7.3.4.2 Schematic of Gas Train.

Copyright National Fire Protection Association
Provided by IHS under license with NFPA
No reproduction or networking permitted without license from IHS
Not for Resale

7.3.5.5 The oxygen analyzer shall include an absolute pressure transducer for gas pressure variations.

7.3.5.6 A rotameter shall be located on the outlet of the oxygen analyzer.

7.3.6 Carbon Dioxide Concentration.

7.3.6.1 The gas sampling tube described in 7.3.4 or an alternative tube at the same location shall be used to provide a continuous sample for measuring the carbon dioxide concentration, using an analyzer with a range of 0 to 10 percent and a maximum relative error of 2 percent of full scale.

7.3.6.2 The total system response time between the sampling inlet and the meter shall be no longer than 30 seconds to reach a value within 5 percent of the final value after introducing a step change in composition of the gas stream flowing past the inlet to the sampling tube.

7.3.7 Carbon Monoxide Concentration.

7.3.7.1 The gas sampling tube described in 7.3.4 or an alternative tube at the same location shall be used to provide a continuous sample for measuring the carbon monoxide concentration, using an analyzer with a range of 0 to 1 percent and a maximum relative error of 2 percent of full scale.

7.3.7.2 The total system response time between the sampling inlet and the meter shall be no longer than 30 seconds to reach a value within 5 percent of the final value after introducing a step change in composition of the gas stream flowing past the inlet to the sampling tube.

7.3.8 Smoke Obscuration Measurement.

7.3.8.1* An optical system shall be installed for measuring light obscuration across the centerline of the exhaust duct.

7.3.8.2 The optical density of the smoke shall be determined by measuring the light transmitted with a photometer system consisting of a white light source and a photocell/detector or a laser system.

7.3.8.3 The light beam used to measure smoke obscuration shall be horizontal.

7.3.8.4* A white light photometer system shall consist of a lamp, lenses, an aperture, and a photocell, as shown in Figure 7.3.8.4.

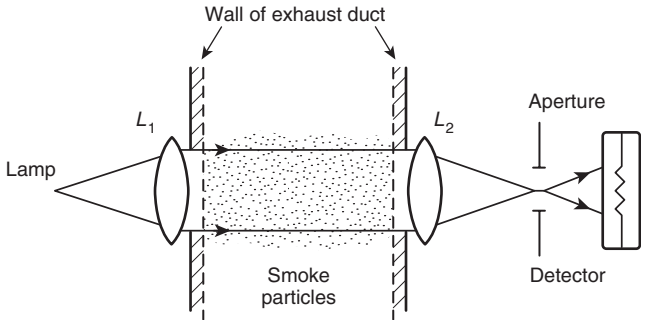

FIGURE 7.3.8.4 Optical System, Using a White Light.

7.3.8.5 The white light system shall be constructed so that soot deposits on the optics during a test do not reduce the light transmission by more than 5 percent.

7.3.8.6* A helium–neon laser system, as shown in Figure 7.3.8.6, shall consist of the following:

(1) Silicon photodiodes as main beam and reference detectors
(2) Electronics to derive an extinction and to set a zero reading

7.3.8.7 The helium–neon laser system shall be designed for split yoke mounting in two pieces that are rigidly coupled together but resiliently attached to the exhaust duct by means of refractory gasketing.

7.3.8.8 A 0.5 mW to 2 mW helium–neon laser beam shall be projected horizontally across the exhaust duct, as illustrated in Figure 7.3.8.8.

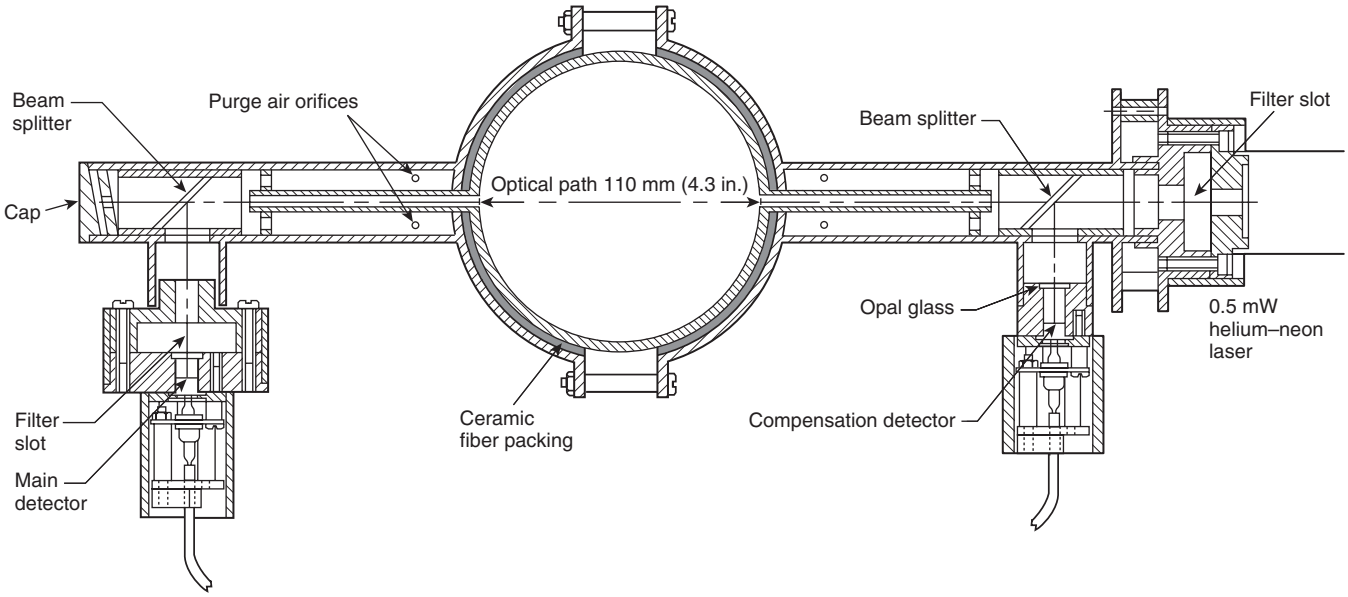

FIGURE 7.3.8.6 Laser Extinction Beam.

Copyright National Fire Protection Association
Provided by IHS under license with NFPA
No reproduction or networking permitted without license from IHS
Not for Resale

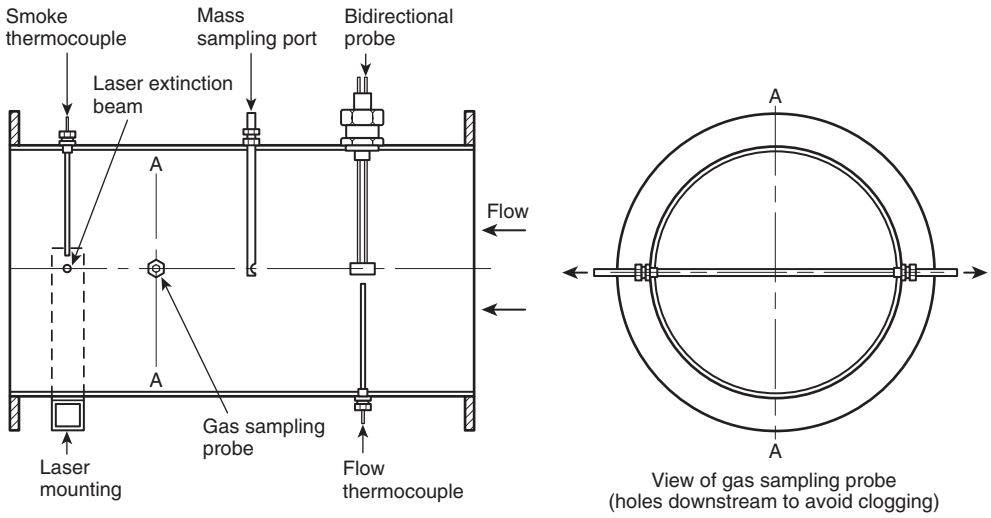

FIGURE 7.3.8.8 Laser Beam and Other Instrumentation Mounting in Exhaust Duct.

Chapter 8 Calibration

8.1 Calibration and Documentation of Ignition Source and Test Equipment.

8.1.1 The following instruments shall be calibrated with standard sources after initial installation:

(1) Smoke meters
(2) Flow or velocity transducers
(3) Gas analyzers

8.1.2 A calibration test shall be performed prior to any fire test using the standard ignition source used for this test method, centered under the exhaust hood.

8.1.2.1 The calibration test required by 8.1.2 shall be performed no more than 30 days prior to any fire test.

8.1.2.2 If modifications are made to the system, a recalibration test shall be performed before any fire test.

8.1.3* The data resulting from a calibration test shall provide the following, and the results of 8.1.3(3) and 8.1.3(4) shall be used to determine the calibration factor (C), in 10.1.1:

(1) Output as a function of time, after the burner is activated, of all instruments normally used for the standard fire test
(2) Maximum extension of the burner flame, as recorded by still photographs taken at 30-second intervals or by continuous video recording
(3) Temperature and velocity profiles across the duct cross section at the location of the bidirectional probe
(4) Differential pressure across the bidirectional probe

8.2* Calibration Procedure. The calibration procedure for heat release measurements shall be conducted as specified in 8.2.1 through 8.2.5.

8.2.1 An approximate value (C_{est}) of the calibration factor (C) shall be estimated by multiplying square meters of the cross section of the duct (in meters squared) by 22.1.

8.2.2* Propane shall be burned, as described in 4.1.3.1 through 4.1.3.3, for 15 minutes at a heat release rate of 160 kW, and the following criteria shall be met:

(1) Measurements shall be taken at least once every 6 seconds.
(2) The response of the system to a stepwise change of the heat output from the burner shall be a maximum of 12 seconds to 90 percent of final value.
(3) The following values for the combustion expansion factor (α) energy (E), and effective heat of combustion (Ht_{comb}) shall be used:
   (a) $\alpha = 1.084$
   (b) $E = 12.8$ MJ/kg
   (c) $Ht_{comb} = 46.5$ MJ/kg
(4) Section 10.4 shall be used.

8.2.3 The total heat released and the corrected calibration factor (C_{cor}) shall be calculated so that the total heat released, as determined by the oxygen consumption calculation shown in Chapter 10, agrees with the theoretical value, obtained from measurement of the volumetric flow rate and weight loss of the fuel, to within ±5 percent, by using the following equation:

$$C_{cor} = \frac{(Ht_{comb} \times F_{mb})}{\int \dot{q}(MW)\,dt} \times C_{est}$$

where:
C_{cor} = corrected calibration factor
Ht_{comb} = heat of combustion of used fuel (MJ/kg)
F_{mb} = mass fuel burned (kg)
$\dot{q}$ = seal release safe (kW)
MW = fuel mass loss
dt = time (sec)

8.2.4 The corrected value of calibration factor shall be used for all tests.

8.2.5 If the calibration factor does not agree within ±5 percent with the value determined during the previous calibration, the following procedure shall be performed:

(1) Check the system for leaks or other problems before proceeding with the test.
(2) Where a problem is found, correct the problem and perform a new calibration in accordance with this chapter.

Copyright National Fire Protection Association
Provided by IHS under license with NFPA
No reproduction or networking permitted without license from IHS
Not for Resale

8.3 Smoke Measurement Calibration. The smoke measuring system shall be calibrated initially by using two neutral density filters of significantly different values and one at 100 percent transmission.

8.3.1 Once the calibration required by Section 8.3 is set, at least the zero value of extinction coefficient (100 percent transmission) shall be verified each day prior to testing.

8.3.2 If departure from the zero line is found at the end of a calibration test, the problem shall be corrected, and a new calibration shall be performed in accordance with this chapter.

8.4* Gas Analyzers Calibration. Gas analyzers shall be calibrated daily, prior to testing, using the manufacturer's instructions.

Chapter 9 Test Procedure

9.1 Procedure. The test procedure shall be as follows:

(1) Establish an initial volumetric flow rate of at least 0.47 m^3/sec (1000 ft^3/min) through the duct, and increase the volume flow rate as required to keep the oxygen content above 14 percent and to capture all effluents from the burn room.
(2) Turn on all sampling and recording devices, establish steady-state baseline readings for at least 2 minutes.
(3) Ignite the gas burner.
(4) Start the timer once burner ignition has been observed.
(5) Increase the gas flow rate to provide a heat release of 40 kW ± 1 kW from the burner.
(6) Continue the exposure at 40 kW ± 1 kW for 5 minutes ± 10 seconds.
(7) Within 10 seconds after the 5-minute initial exposure, increase the gas flow rate to provide a rate of heat release of 160 kW ± 5 kW from the burner.
(8) Continue the exposure of 160 kW ± 5 kW for 10 minutes ± 10 seconds.
(9) Provide visual documentation in accordance with 7.1.4.
(10) Provide a voice or written record of the fire that will provide the times of all significant events, such as, but not limited to the following:
    (a) Times of ignition
    (b) Escape of flames through the doorway
    (c) Flashover
(11) Shut off the ignition burner 15 minutes after start of the test, and terminate the test at that time, unless safety considerations dictate an earlier termination.
(12) Document damage after the test, using words, pictures, and drawings.

Chapter 10 Calculation Methods

10.1* Mass Flow Rate.

10.1.1 The mass flow rate through the exhaust duct shall be obtained from the velocity measured with a bidirectional probe *(see 7.3.2)* at one point in the duct.

10.1.2 The mass flow rate shall be calculated using the results found in Section 8.2 and the equation in 10.1.3.

10.1.3 The mass flow rate shall be monitored by using the following equation (see description of variables in Section 10.4):

$$\dot{m}_e = C\sqrt{\frac{\Delta P}{T_e}}$$

10.1.4* Concentration measurements of O_2, CO_2, and CO shall be used, and the oxygen depletion factor shall be calculated according to the following equation:

$$\phi = \frac{X_{O_2}^0(1 - X_{CO_2} - X_{CO}) - X_{O_2}(1 - X_{CO_2}^0)}{X_{O_2}^0\left(1 - X_{O_2} - X_{CO_2} - X_{CO}\right)}$$

10.1.5 The rate of heat release shall be calculated according to the following equation:

$$\dot{q} = \left[E\phi - (E_{CO} - E)\frac{1-\phi}{2}\left(\frac{X_{CO}}{X_{O_2}}\right)\right]\frac{M_{O_2}}{M_e}\left(\frac{\dot{m}}{1+\phi(\alpha-1)}\right)\left(X_{O_2}^0\right)$$

10.1.6 The total heat released shall be calculated according to the following equation:

$$THR = \int \dot{q}dt$$

10.2 Smoke Measurement Equations.

10.2.1 The extinction coefficient, k, shall be calculated from the following equation:

$$k = \frac{1}{L_p}\ln\left(\frac{I_0}{I}\right)$$

10.2.2 The optical density per unit light path length shall be calculated according to the following equation:

$$OD = \frac{1}{L_p}\log\left(\frac{I_0}{I}\right)$$

10.2.3 The volumetric flow rate at the smoke meter shall then be calculated as the product of the mass flow rate and the temperature at the measurement point (bidirectional probe), corrected by the density of air at the standard temperature 273.15 K and by the temperature, in Kelvin, as calculated in the following equation:

$$\dot{V}_s = m_e\left(\frac{T_e}{\rho_0 273.15}\right) = \frac{\dot{m}_e T_e}{353}$$

10.2.4 The rate of smoke release shall be defined by the following equation:

$$RSR = V_s k$$

10.2.5 Total smoke released shall be defined by the following equation:

$$TSR = \int RSR\ dt$$

10.3 Release Rate of Combustion Gases.

10.3.1 The release rate of carbon monoxide shall be calculated from the following equation:

$$\dot{m}_{CO} = \frac{X_{CO}\left(1 - X_{O_2}^0 - X_{CO_2}^0\right)}{1 - X_{O_2} - X_{CO_2} - X_{CO}}\left(\frac{M_{CO}}{M_a}\right)\frac{\dot{m}_e}{1+\phi(\alpha-1)}$$

Copyright National Fire Protection Association
Provided by IHS under license with NFPA
No reproduction or networking permitted without license from IHS
Not for Resale

10.3.2 For other combustion gases, the release rate shall be a function of the following:

(1) Sum of the concentrations of that gas at each scan in the exhaust (that is, the products of the mole fraction of the combustion gas, overall mass flow rate for that scan, and scan period)
(2) Molecular weight
(3) Total test period, as shown in the following equation:

$$\dot{m}_x = \frac{\sum \left(X_{xi} \dot{m}_{ei} \Delta t_i \right) \left(\frac{M_x}{M_a} \right)}{\text{test period}}$$

10.4 Symbols. The following symbols shall be used in this standard.

C = calibration factor for orifice plate or bidirectional probe ($kg^{1/2}$, $m^{1/2}$, or $k^{1/2}$)
E = net heat released per unit mass of oxygen consumed (13.1 MJ/kg)
E_{CO} = net heat released per unit mass of oxygen consumed, for carbon monoxide (17.6 MJ/kg)
Ht_{comb} = heat of combustion of the fuel used (46.5 MJ/kg for propane and 50.0 MJ/kg for methane)
I_0 = light intensity for a beam of parallel light rays, measured in a smoke-free environment, with a detector having the same spectral sensitivity as the human eye and reaching the photodetector
I = light intensity for a parallel light beam having traversed a certain length of smoky environment and reaching a photodetector
k = extinction coefficient (1/m)
L_p = light path length of beam through smoky environment, which is equal to the duct diameter (m)
$\dot{m}_e$ = mass flow rate in exhaust duct (kg/sec)
$\dot{m}_{CO}$ = release rate of carbon monoxide (kg/sec)
$\dot{m}_x$ = release rate of combustion product x (kg/ sec)
M_a = molecular weight of incoming and exhaust air (29 kg/kmol)
M_{CO} = molecular weight of carbon monoxide (28 kg/kmol)
M_{O_2} = molecular weight of oxygen (32 kg/kmol)
OD = optical density per unit light path length (L/m)
ΔP = pressure drop across the orifice plate or bidirectional probe (Pa)
$\dot{q}$ = rate of heat release (kW)
RSR = rate of smoke release (m^2/sec)
Δt = scan period (sec)
T_e = gas temperature at the orifice plate or bidirectional probe (K)
test period = duration of test period (sec)
THR = total heat released (MJ)
TSR = total smoke released (m^2)
$\dot{V}_s$ = volumetric flow rate at location of smoke meter (value adjusted for smoke measurement calculations) (m^3/sec)
X_{CO} = measured mole fraction of CO in exhaust flow (nondimensional)
X_{CO_2} = measured mole fraction of CO_2 in exhaust flow (nondimensional)
$X^0_{CO_2}$ = measured mole fraction of CO_2 in incoming air (nondimensional)
X_{O_2} = measured mole fraction of O_2 in exhaust flow (nondimensional)
$X^0_{O_2}$ = measured mole fraction of O_2 in incoming air (nondimensional)
X_x = measured mole fraction of combustion gas x in exhaust flow (nondimensional)
α = combustion expansion factor (nondimensional) (Use a value of 1.105, unless the value for the test specimen, and not the ignition gas, is known.)
μ = combustion expansion factor (nondimensional; use a value of 1.105, unless the value for the test specimen and not the ignition gas is known)
ϕ = oxygen depletion factor (nondimensional)
ρ_0 = density of air at 273.15 K: 1.293 (kg/m^3)

Chapter 11 Report

11.1 Report. The report shall include the data and information specified in 11.1.1 through 11.1.8.

11.1.1 Materials. Materials shall include the following:

(1) Name, thickness, density, and size of the test material, along with other identifying characteristics or labels
(2) Mounting and conditioning of materials, including detailed description of mounting procedure and justification for any variations from end-use installation
(3) Layout of specimens and attachments, including applicable drawings, in fire test room
(4) Relative humidity and temperature of the fire test room and the test building prior to and during the test

11.1.2 Burner Gas Flow. The burner gas flow shall be the fuel gas flow to the ignition burner and its calculated rate of heat output.

11.1.3 Time History of the Total Heat Flux to Floor. The time history of the total heat flux to floor shall be the total incident heat flux at the center of the floor for the heat flux gauge as a function of time starting 3 minutes prior to the test.

11.1.4 Time History of the Gas Temperature. The time history of the gas temperature shall be the temperature of gases in the fire test room, in the doorway, and in the exhaust duct for each thermocouple as a function of time starting 3 minutes prior to the test.

11.1.5 Time History of the Rate of Heat Release of the Fire. The rate of heat release shall be calculated from the measured oxygen, carbon monoxide, and carbon dioxide concentrations and the temperature and volumetric flow rate of the gas in the duct.

11.1.5.1 The time history of the rate of heat release as well as the maximum and average values shall be reported.

11.1.5.2 The time history of total heat released as well as the final value and the values shall be reported every 5 minutes.

11.1.5.3 The measurement method used shall be reported.

--`,,```,,-`-`,,`,,`,`,,`---

Copyright National Fire Protection Association
Provided by IHS under license with NFPA
No reproduction or networking permitted without license from IHS
Not for Resale

11.1.6 Time History of the Fire Growth. The time history of the fire growth shall be a transcription of the visual, photographic, audio, and written records of the fire test.

11.1.6.1 The records shall indicate the following:

(1) Time of ignition of the wall finish and the ceiling finish where present
(2) Approximate location of the flame front most distant from the ignition source at intervals not exceeding 15 seconds during the fire test
(3) Time of flashover
(4) Time at which flames extend outside the doorway

11.1.6.2 Still photographs taken at intervals not exceeding 30 seconds or continuous video recording shall be supplied.

11.1.6.3 Drawings and photographs or video recording showing the extent of the damage of the materials after the test shall be supplied.

11.1.7 Time History of Smoke Obscuration.

11.1.7.1 The smoke obscuration shall be described by means of the optical density, rate of smoke release, and total smoke released measured with the instrumentation in the exhaust duct.

11.1.7.2 The following shall be reported:

(1) Time histories of smoke release rate, optical density, and volumetric duct flow rate, as well as the maximum and average values
(2) Total smoke release time history, as well as the final value and the values every 5 minutes
(3) Details of the smoke obscuration measurement equipment used, including the orientation of the light beam

11.1.8 Damage during test shall be documented after the test using text, pictures, and drawings.

11.2* Discussion of Performance. A complete discussion of sample performances shall be provided and shall include the following:

(1) Flame spread to ceiling during initial exposure
(2) Burning to outer extremities of walls or ceilings
(3) Presence of burning droplets on the floor that persist in burning for 30 seconds or more
(4) Visibility information in the fire test room
(5) Other pertinent details with respect to fire growth
(6) Melting or dripping of materials

Annex A Explanatory Material

Annex A is not a part of the requirements of this NFPA document but is included for informational purposes only. This annex contains explanatory material, numbered to correspond with the applicable text paragraphs.

A.1.1 The fire performance of textile wall coverings is addressed specifically in NFPA 265, *Standard Methods of Fire Tests for Evaluating Room Fire Growth Contribution of Textile Coverings on Full Height Panels and Walls*. Further information on testing of textile wall coverings can be found in Fisher et al., *Room Fire Tests of Textile Wall Coverings*. The fire performance of other wall covering systems is addressed in this standard. Some interior finish materials, such as expanded vinyl wall coverings, are required to be tested in the same manner as textile wall coverings (e.g., in NFPA *101, Life Safety Code*).

A.1.3.10 One important difference between the ignition source used in this test method and that used in NFPA 265, *Standard Methods of Fire Tests for Evaluating Room Fire Growth Contribution of Textile Coverings on Full Height Panels and Walls*, is that the flame in the NFPA 265 ignition source does not reach the ceiling. Thus, the NFPA 265 ignition source should not be used for testing materials that are to be installed on the ceiling.

There are significant differences between the ignition source used in this test method and that source used in the NFPA 265 test method. Although both test methods use the same burner equipment, there are differences in burner placement and fuel flow. The burner arrangement (spacing, gas flows, and so on) used in this test method provides a sustained flame impingement on the ceiling of the test room, whereas the burner arrangement in NFPA 265 does not. The spacing of the burner, moreover, can change the heat flux to which the test wall materials are exposed.

A.4.1.1 The ignition source described in 4.1.1 has been referred to as the "proposed ASTM room-corner test" ignition source. See further information in "Interlaboratory Test Program on Proposed ASTM Standard Method for Room Fire Test of Wall and Ceiling Materials and Assemblies."

A.4.1.4 The heat of combustion corresponds to a propane gas flow rate of 26.9 L/min at 40 kW and 107.5 L/min at 160 kW for propane with a net heat of combustion of 46.5 MJ/kg, under standard conditions of 101 kPa pressure (absolute pressure of 14.7 psi) and 20°C (68°F). Figure A.4.1.4 is a schematic of two typical gas flow regulation systems.

A.4.2.1 A study by R. D. Peacock and J. N. Breese (NBSIR 82-2516, *Computer Fire Modeling for the Prediction of Flashover*) examined the effect of geometric room changes on the minimum energy required to cause flashover. It showed that increased room height beyond 2.4 m (8 ft) changed the minimum needed flashover energy (expressed as percent) as follows, where ΔH is the increase in room height expressed in meters:

$$\text{percent } 100 + 5.3\Delta H$$

Thus, for instance, if the height were changed by 0.2 m, the energy scaling would be changed by 1.06 percent. This difference is completely insignificant, since few fire measurements can be made to a repeatability or reproducibility of better than 10 percent. The effects of changing floor areas were similarly modest. Fire test room dimensions having a tolerance of ±0.1 m should be entirely adequate for reproducibility.

A.4.2.2 To facilitate the mounting of the instruments and of the ignition source, it is convenient to place the fire test room so that the floor can be reached from its underside.

A.4.2.4 If self-supporting panels are tested, a separate exterior frame or block compartment is not required.

A.5.1.1 It has been shown that the specific adhesive used to secure a specimen can significantly affect the fire performance of a wall covering system. Therefore, the adhesive used should be the same as that intended for actual use.

A.5.1.3 For some building materials, none of the methods described are applicable. In such cases, other means of attachment should be devised. Whenever possible, these specimens should be mounted using the same method of attachment as is intended in the actual use installation.

A.5.2.1.2(4) It is not the intent to require each sample to be tested over various thicknesses or types of gypsum wallboard.

Copyright National Fire Protection Association
Provided by IHS under license with NFPA
No reproduction or networking permitted without license from IHS
Not for Resale

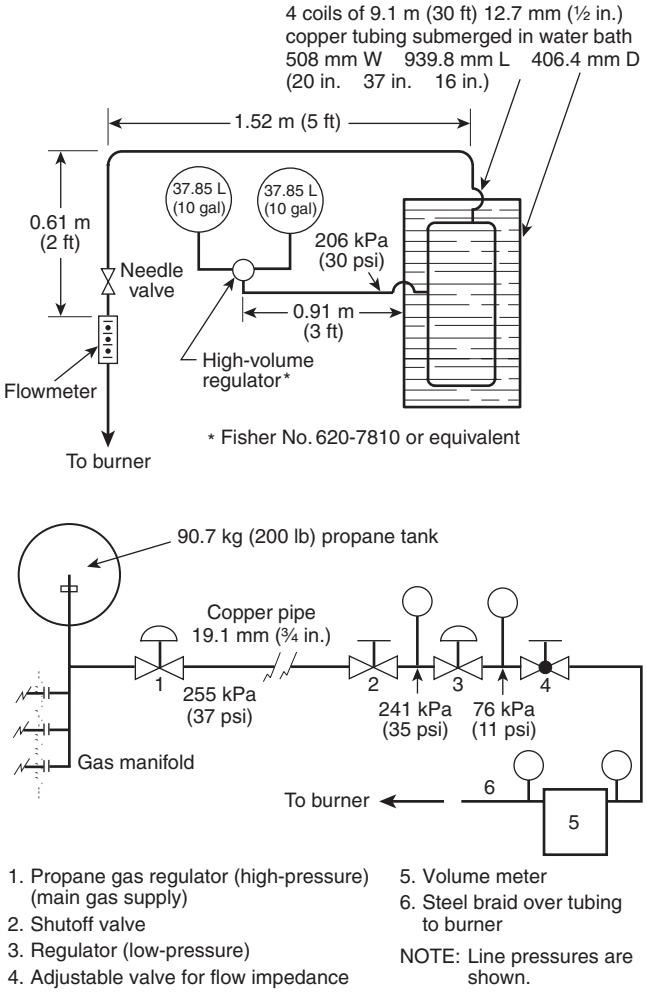

FIGURE A.4.1.4 Two Typical Gas Flow Regulation Systems.

A.5.2.1.3 Steel and mineral wool are examples of acceptable alternative substrates based on the end use.

A.5.6 Materials falling within this category include organic or inorganic materials, or both, formed or laminated into blocks, boards, planks, slabs, or sheets of various sizes, thicknesses, or shapes.

A.5.10 For products in which vaporization of solvents occurs, such as those using adhesives, or products containing wood, a conditioning time of 4 weeks is not uncommon.

A.7.1.1 It is preferable to mount the total heat flux gauge at a height of 5 mm to 30 mm (approximately 0.2 in. to 1.2 in.) above the floor surface.

A.7.1.1.1 The gauge target receives radiation and possibly, to a small extent, convection. Further information on instrumentation for heat flux measurements can be found in "An Instrument for the Direct Measurement of Intense Thermal Radiation" by R. Gardon. Two types of heat flux measuring gauges are commonly used. The sensing techniques between the two gauges are different. The Schmidt–Boelter gauge uses a thermopile, whereas the Gardon gauge uses foil.

Due to the difference in sensing techniques, one manufacturer recommends Schmidt–Boelter gauges for measuring heat fluxes in the range of 5 kW/m^2 to 25 kW/m^2, whereas Gardon gauges are more appropriate for heat flux values greater than 50 kW/m^2.

The difference in the sensing techniques can affect the precision of the heat flux measurements, depending on the application and the amount of the incident flux. The manufacturer also reports that, in general, the Schmidt–Boelter gauges tend to be more robust, especially during cleaning. For these reasons, this test method requires the use of the Schmidt–Boelter gauges.

One method of maintaining the heat flux gauge temperature is by water supplied at a temperature of 50°C to 65°C (122°F to 149°F). A flow rate of at least 0.38 L/min (0.1 gal/min) is recommended to maintain the gauge temperature. Other methods or flow rates are acceptable.

A.7.1.2 Metal-clad thermocouples with ceramic powder filling have been found to be satisfactory for this purpose, but silicone-impregnated glass insulated thermocouples are likely to break at temperatures above 800°C (1472°F).

A.7.2.2 Experience suggests that a draft capable of moving up to 2.5 m^3/sec (5150 standard ft^3/min), which is equivalent to 5.7 m^3/sec (11,800 ft^3/min) at 400°C (752°F), during the test is sufficient for fires up to flashover.

A.7.2.3 Some performance requirements are detailed in A.7.2.2.

A.7.3.2 A bidirectional probe is preferable to a pitot-static tube for measuring velocity in the exhaust duct because it minimizes problems of clogging with soot.

A.7.3.2.4 Capacitance transducers have been found to be most stable for this application.

A.7.3.4 Stainless steel sampling lines have been shown to be satisfactory.

A.7.3.4.4 The recommended approach to designing a cooling (and drying) column (to remove water from the combustion gases) is to use a refrigerated column and separation chamber fitted with a drain plug from which the collected water is removed from time to time. Alternative approaches or devices that are shown to give equivalent results are also acceptable. It is very important to remove water from the combustion stream before it reaches the oxygen, carbon monoxide, and carbon dioxide analyzers.

A.7.3.4.5 Combustion gas concentration measurements require the use of appropriate time shifts in order to account for the time required for gas analyzer response and for combustion gas transit time within the sampling system. *(See Annex B.)*

A.7.3.8.1 White light and laser systems have been shown to give similar results. See the following publications for more information:

(1) "Comparison of Smoke Release from Building Products" by B. Ostman
(2) "Rate of Heat Release Testing for Vinyl Wire and Cable Materials with Reduced Flammability and Smoke: Small Scale and Full Scale Tests" by A. W. Coaker, M. M. Hirschler, and C. L. Shoemaker (research showing differences between white light and laser measurements in one application)
(3) "Optical Measurement of Smoke" by W. K. Chow and K. F. Lai

Copyright National Fire Protection Association
Provided by IHS under license with NFPA
No reproduction or networking permitted without license from IHS
Not for Resale

A.7.3.8.4 The following information is being provided for informational purposes only and has not been independently verified, certified, or endorsed by the NFPA or any of its technical committees. The following describes an example of a white light measuring system that has been found to be satisfactory:

(1) Lenses — Plano convex: diameter 40 mm, focal length 50 mm
(2) Lamp — Osram Halo Stars: 64410: 6 V, 10 W or equivalent
(3) Photocell — United Detector Technology: PIN 10 AP or equivalent
(4) Power supply — Gresham Lion Ltd: Model G x012 or equivalent

A.7.3.8.6 The following information is being provided for informational purposes only and has not been independently verified, certified, or endorsed by the NFPA or any of its technical committees. The following describes an example of a laser measuring system that has been found to be satisfactory:

(1) Helium–neon laser — Aerotech OEM-05P or equivalent
(2) Laser power supply — Aerotech LSS-05 or equivalent
(3) Photocells — Hammamatsu S1336-44BK or equivalent

A.8.1.3 Measurement of the temperature and velocity profiles across the duct cross section at the location of the bidirectional probe and of the differential pressure across the bidirectional probe is not needed when the calibration factor, *C*, is used, as described in Section 8.2.

A.8.2 The estimated calibration factor is likely to be within 20 percent of the correct value.

A.8.2.2 Effective heat of combustion from propane is 44.2 MJ/kg, which is calculated at a combustion efficiency of 95 percent for propane, which is 46.5 MJ/kg.

A.8.4 ASTM E 800, *Standard Guide for Measurement of Gases Present or Generated During Fires*, gives guidance on the calibration of gas analyzers.

A.10.1 Further information can also be found in "Measuring Rate of Heat Release by Oxygen Consumption" by M. L. Janssens and in "Oxygen Consumption Calorimetry" by M. L. Janssens and W. J. Parker.

The mass flow rate is usually placed along the centerline of the duct. The velocity profile is obtained by measuring velocity at a sufficient number of representative points over the diameter or cross section of the duct prior to any fire tests. Detailed procedures for obtaining this profile are described in *The Measurement of Air Flow* by E. Ower and R. Pankhurst. Usually, conditions in full-scale fire tests are such that the flow in the duct is turbulent, resulting in a shape factor, k_c (ratio of the average velocity to the velocity along the centerline), that is close to 1.

Due to considerable soot production in many fires, pitot-static tubes are generally not useful because of the potential for clogging of the holes. In response to this problem, B. J. McCaffrey and G. Heskestad ("A Robust Bidirectional Low-Velocity Probe for Flame and Fire Application") designed the bidirectional probe described in 7.3.2. This system involves measuring the differential pressure across the probe and the centerline velocity.

A.10.1.4 Water vapor must be removed before the sample air is introduced into the oxygen analyzer. A water trap and desiccant can be used to remove water.

A.11.2 Tests with ceiling finish materials that are not self-supporting and fall to the floor of the test room during the test should be deemed invalid.

Annex B Method of Determining Suitability of Oxygen Analyzers for Making Heat Release Measurements

This annex is not a part of the requirements of this NFPA document but is included for informational purposes only.

B.1 General. The paramagnetic type of oxygen analyzer is best suited for fire gas analysis. Electrochemical analyzers or analyzers using zirconia sensors have generally been found not to have adequate sensitivity or suitability for this type of work. The normal range of the instrument to be used is 0 percent to 25 percent volume oxygen. The linearity of paramagnetic analyzers is usually better than can be checked by a user laboratory, thus verifying that their linearity is not necessary. It is important, however, to confirm the noise and short-term drift of the instrument used.

B.2 Procedure.

B.2.1 The analyzer suitability is checked by the following steps:

(1) Connect two different gas bottles that are approximately 2 percentage points apart (for example, 15 percent volume and 17 percent volume) to a selector valve at the inlet of the analyzer.
(2) Connect the electrical power, and let the analyzer warm up for 24 hours, with one of the test gases from B.2.1(1) flowing through it.
(3) Connect a data acquisition system to the output of the analyzer and perform the following procedure:
    (a) Quickly switch from the first gas bottle to the second bottle, and immediately start collecting data, taking one data point per second.
    (b) Collect data for 20 minutes.
(4) Determine the drift by using a least-squares analysis fitting procedure to pass a straight line through the last 19 minutes of data as follows:
    (a) Extrapolate the line back through the first minute of data.
    (b) Determine the short-term drift as the difference between the readings at 0 minutes and at 20 minutes on the fitted straight line.
    (c) Record the drift in units of parts per million of oxygen.
(5) Calculate the noise, which is represented by the root-mean-square deviation around the fitted straight line, and record it in units of parts per million of oxygen.

B.2.2 The analyzer is suitable for use in heat release measurements if the sum of the drift plus the noise terms is 250 ppm oxygen. It is important to note that both terms must be expressed as positive numbers.

B.3 Additional Precautions. A paramagnetic oxygen analyzer is directly sensitive to barometric pressure changes at its outlet port and to flow rate fluctuations in the sample supply stream. It is essential that the flow rate be regulated. Either a flow rate regulator of the mechanical diaphragm type or an electronic mass flow rate controller should be used. To protect against errors due to changes in barometric pressure, one of the following procedures should be used:

(1) Control the back pressure to the analyzer with a back pressure regulator of the absolute-pressure type.
(2) Electrically measure the actual pressure at the detector element, and provide a signal correction for the analyzer output.

See NFPA 271, *Standard Method of Test for Heat and Visible Smoke Release Rates for Materials and Products Using an Oxygen Consumption Calorimeter.*

Copyright National Fire Protection Association
Provided by IHS under license with NFPA
No reproduction or networking permitted without license from IHS
Not for Resale

Annex C Informational References

C.1 Referenced Publications. The documents or portions thereof listed in this annex are referenced within the informational sections of this standard and are not part of the requirements of this document unless also listed in Chapter 2 for other reasons.

C.1.1 NFPA Publications. National Fire Protection Association, 1 Batterymarch Park, Quincy, MA 02169-7471.

NFPA *101®*, *Life Safety Code®*, 2006 edition.

NFPA 265, *Standard Methods of Fire Tests for Evaluating Room Fire Growth Contribution of Textile Coverings on Full Height Panels and Walls*, 2002 edition.

NFPA 271, *Standard Method of Test for Heat and Visible Smoke Release Rates for Materials and Products Using an Oxygen Consumption Calorimeter*, 2004 edition.

C.1.2 Other Publications.

C.1.2.1 ASTM Publications. American Society for Testing and Materials, 100 Barr Harbor Drive, West Conshohocken, PA, 19428-2959.

ASTM E 800, *Standard Guide for Measurement of Gases Present or Generated During Fires* (Annual Book of ASTM Standards, Vol. 4.07), 2001.

ASTM Institute for Standards Research, "Interlaboratory Test Program on Proposed ASTM Standard Method for Room Fire Test of Wall and Ceiling Materials and Assemblies," International Fire Standards Project Report, PCN: 33-000012-31, October 1994.

C.1.2.2 NIST Publication. National Institute of Standards and Technology, U.S. Department of Commerce, Fire Research Information Service, Building and Fire Research Laboratory, 100 Bureau Drive, Gaithersburg, MD 20899.

R. D. Peacock and J. N. Breese, NBSIR 82-2516, *Computer Fire Modeling for the Prediction of Flashover*, 1982.

C.1.2.3 Other Publications. Chow, W. K., and K. F. Lai, "Optical Measurement of Smoke," *Fire and Materials*, vol. 16, 135–139, 1992.

Coaker, A. W., M. M. Hirschler, and C. L. Shoemaker, "Rate of Heat Release Testing for Vinyl Wire and Cable Materials with Reduced Flammability and Smoke: Small Scale and Full Scale Tests," in *Proc. 15th. Int. Conf. on Fire Safety, Product Safety Corp.*, San Francisco, C. J. Hilado, ed. January 8–12, pp. 220–256, 1990.

Fisher, F. L., B. MacCracken, and R. B. Williamson, *Room Fire Tests of Textile Wall Coverings*, ES-7853, Service to Industry Report No. 85-4, Fire Research Laboratory, University of California, Berkeley, CA, April 1986.

Gardon, R., "An Instrument for the Direct Measurement of Intense Thermal Radiation," *Review of Scientific Instruments*, vol. 24, no. 5, pp. 366–370, May 1953.

Janssens, M. L., "Measuring Rate of Heat Release by Oxygen Consumption," *Fire Technology*, pp. 234–249, August 1991.

Janssens, M. L., and W. J. Parker, "Oxygen Consumption Calorimetry," in *Heat Release in Fires*, V. Babrauskas and S. J. Grayson, eds. Elsevier, London, Chapter 3, pp. 31–59, 1992.

McCaffrey, B. J., and G. Heskestad, "A Robust Bidirectional Low-Velocity Probe for Flame and Fire Application," *Combustion and Flame*, vol. 26, no. 1, pp. 125–127, February 1976.

Ostman, B., "Comparison of Smoke Release from Building Products," *Int. Conf. FIRE. Control the Heat…Reduce the Hazard*, London, Oct. 24–25, 1988, Fire Research Station, UK, paper 8.

Ower, E., and R. Pankhurst, *The Measurement of Air Flow*, Pergamon Press, 5th ed., pp. 112–147, 1977.

C.2 Informational References. (Reserved)

C.3 References for Extracts in Informational Sections. (Reserved)

Copyright National Fire Protection Association
Provided by IHS under license with NFPA
No reproduction or networking permitted without license from IHS
Not for Resale

Index

© 2005 National Fire Protection Association. All Rights Reserved.

The copyright in this index is separate and distinct from the copyright in the document that it indexes. The licensing provisions set forth for the document are not applicable to this index. This index may not be reproduced in whole or in part by any means without the express written permission of NFPA.

-A-

Acoustical materials, mounting of 5.4
Application of standard 1.3
Application of test method A.1.3.10
Average upper gas layer temperature (definition) 3.3.1

-B-

Backing materials, mounting of 5.3
Batt- or blanket-type insulating materials, mounting of 5.5
Bidirectional probe 7.3.2, A.7.3.2
Board materials, mounting of 5.4
Building units, mounting of 5.6, A.5.6

-C-

Calculation methods ..... Chap. 10
Combustion gases, release rate of 10.3
Mass flow rate 10.1, A.10.1
Smoke measurement equations 10.2
Calibration ..... Chap. 8
Canopy hood 7.2
Carbon dioxide
Concentration 7.3.6, 10.1.4, 11.1.5, A.10.1.4
Release rate 10.3.2
Carbon monoxide
Concentration 7.3.7, 10.1.4, 11.1.5, A.10.1.4
Release rate 10.3.1
Ceiling lining materials, mounting of 5.8, 5.9.2, 5.9.3
Combustion gases ..... *See also* Carbon dioxide; Carbon monoxide; Gas analyzers; Oxygen
Gas temperature, time history of 11.1.4
Release rate of 10.3
Conditioning, test specimen 5.10, A.5.10

-D-

Definitions ..... Chap. 3
Documentation
Ignition source and test equipment 8.1, A.8.1.3
Test procedure 9.1
Visual documentation ..... 7.1.4, 9.1(9), 9.1(12), 11.1.6.2

-E-

Environmental conditions ..... Chap. 6
Exhaust collection system 7.3.1
Exhaust duct 7.2, 7.3

-F-

Fire growth, time history of 11.1.6
Fire test room
Environment 6.1
Geometry and construction of ..... 4.2, A.4.2.1 to A.4.2.4
Instrumentation 7.1, A.7.1.1, A.7.1.2
Flashover
Occurrence of 1.3.11
Target flashover indicators 7.1.3

-G-

Gas analyzers ..... 7.3.4.5, 8.1.1, 8.4, A.7.3.4.5, A.8.4, Annex B
Gas temperature, time history of 11.1.4
Gas train ..... 7.3.4.2 to 7.3.4.4, A.7.3.4.5

-H-

Heat flux gauge 7.1.1, A.7.1.1
Heat flux to floor, time history of total 11.1.3
Heat release measurements
Calibration procedure for 8.2, A.8.2
Oxygen analyzers, method of determining suitability of ..... Annex B
Symbols 10.4
Time history, rate of heat release of fire 11.1.5
Hood, canopy 7.2, A.7.2.2, A.7.2.3

-I-

Ignition source 1.3.10, 4.1, A.4.1.1
Burner gas flow, report on 11.1.2
Calibration and documentation of 8.1, A.8.1.3
Instrumentation ..... Chap. 7
Calibration of 8.1.1
Canopy hood 7.2, A.7.2.2, A.7.2.3
Exhaust duct ..... 7.2, 7.3, A.7.2.2, A.7.2.3, A.7.3.2 to A.7.3.8.6
Fire test room 7.1, A.7.1.1, A.7.1.2
Insulating and other flexible material, mounting of 5.5

-M-

Mass flow rate 10.1, A.10.1

-O-

Oxygen
Analyzers, method of determining suitability of ..... Annex B
Concentration 7.3.5, 10.1.4, 11.1.5, A.10.1.4
Release rate 10.3.2

-P-

Performance, discussion of 11.2, A.11.2
Photographs 7.1.4, 11.1.6.2
Purpose of standard 1.2

-R-

References ..... Chap. 2, Annex C
Report ..... Chap. 11

-S-

Sampling lines 7.3.4, A.7.3.4
Scope of standard 1.1, A.1.1
Shall (definition) 3.2.1
Should (definition) 3.2.2
Smoke measurement ..... 7.3.8, 8.1.1, 8.3, A.7.3.8.1 to A.7.3.8.6
Equations 10.2
Time history of smoke obscuration 11.1.7
Specimen mounting ..... Chap. 5
Acoustical and other board materials 5.4
Backing materials 5.3
Batt- or blanket-type insulating and other flexible materials ... 5.5
Building units 5.6, A.5.6
Ceiling lining 5.8, 5.9.2, 5.9.3
Conditioning of mounted specimen 5.10, A.5.10

Copyright National Fire Protection Association
Provided by IHS under license with NFPA
No reproduction or networking permitted without license from IHS
Not for Resale

Substrates ..... 5.2, A.5.2.1.2(4), A.5.2.1.3
Wall covering materials 5.7, 5.9.1, 5.9.2
Standard (definition) 3.2.3
Substrates, mounting of materials using .... 5.2, A.5.2.1.2(4), A.5.2.1.3
Symbols 10.4

-T-

Target flashover indicators 7.1.3
Test equipment ..... Chap. 4
Calibration and documentation of 8.1, A.8.1.3
Test materials, report on 11.1.1
Test procedure ..... Chap. 9
Thermocouples 7.1.2, 7.3.3, A.7.1.2
Transducers, flow or velocity 8.1.1

-V-

Video recording 7.1.4, 11.1.6.2

-W-

Wall covering materials, mounting of 5.7, 5.9.1, 5.9.2

Copyright National Fire Protection Association
Provided by IHS under license with NFPA
No reproduction or networking permitted without license from IHS
Not for Resale

Sequence of Events Leading to Publication of an NFPA Committee Document

Call goes out for proposals to amend existing document or for recommendations on new document.

▼

Committee meets to act on proposals, to develop its own proposals, and to prepare its report.

▼

Committee votes on proposals by letter ballot. If two-thirds approve, report goes forward. Lacking two-thirds approval, report returns to committee.

▼

Report — *Report on Proposals* (ROP) — is published for public review and comment.

▼

Committee meets to act on each public comment received.

▼

Committee votes on comments by letter ballot. If two-thirds approve, supplementary report goes forward. Lacking two-thirds approval, supplementary report returns to committee.

▼

Supplementary report — *Report on Comments* (ROC) — is published for public review.

▼

NFPA membership meets (Annual or Fall Meeting) and acts on committee report (ROP or ROC).

▼

Committee votes on any amendments to report approved at NFPA Annual or Fall Meeting.

▼

Appeals to Standards Council on Association action must be filed within 20 days of the NFPA Annual or Fall Meeting.

▼

Standards Council decides, based on all evidence, whether or not to issue standard or to take other action, including upholding any appeals.

Committee Membership Classifications

The following classifications apply to Technical Committee members and represent their principal interest in the activity of the committee.

M *Manufacturer:* A representative of a maker or marketer of a product, assembly, or system, or portion thereof, that is affected by the standard.

U *User:* A representative of an entity that is subject to the provisions of the standard or that voluntarily uses the standard.

I/M *Installer/Maintainer:* A representative of an entity that is in the business of installing or maintaining a product, assembly, or system affected by the standard.

L *Labor:* A labor representative or employee concerned with safety in the workplace.

R/T *Applied Research/Testing Laboratory:* A representative of an independent testing laboratory or independent applied research organization that promulgates and/or enforces standards.

E *Enforcing Authority:* A representative of an agency or an organization that promulgates and/or enforces standards.

I *Insurance:* A representative of an insurance company, broker, agent, bureau, or inspection agency.

C *Consumer:* A person who is, or represents, the ultimate purchaser of a product, system, or service affected by the standard, but who is not included in the *User* classification.

SE *Special Expert:* A person not representing any of the previous classifications, but who has a special expertise in the scope of the standard or portion thereof.

NOTES:

1. "Standard" connotes code, standard, recommended practice, or guide.
2. A representative includes an employee.
3. While these classifications will be used by the Standards Council to achieve a balance for Technical Committees, the Standards Council may determine that new classifications of members or unique interests need representation in order to foster the best possible committee deliberations on any project. In this connection, the Standards Council may make such appointments as it seems appropriate in the public interest, such as the classification of "Utilities" in the National Electrical Code Committee.
4. Representatives of subsidiaries of any group are generally considered to have the same classification as the parent organization.

--`,,```,,,-`-`,,`,,`,`,,`---

Copyright National Fire Protection Association
Provided by IHS under license with NFPA
No reproduction or networking permitted without license from IHS

Not for Resale

NFPA Technical Committee Document Proposal Form

Note: All proposals must be received by 5:00 p.m. EST/EDST on the published proposal closing date.

For further information on the standards-making process, please contact Codes and Standards Administration at 617-984-7249. For technical assistance, please call NFPA at 617-770-3000.

FOR OFFICE USE ONLY
Log #: _____
Date Rec'd: _____

Please indicate in which format you wish to receive your ROP/ROC: ☐ **CD ROM** ☐ **paper** ☐ **download**
(Note: In choosing the download option you intend to view the ROP/ROC from our Website. No copy will be sent to you.)

Date 12/18/02 **Name** John B. Smith **Telephone** 617-555-1212
Company _____
Address 9 Seattle St. **City** Seattle **State** WA **Zip** 02255
Please indicate organization represented (if any) Fire Marshals Assn. of North America

1. **a) NFPA Document Title** National Fire Alarm Code
   b) NFPA No. & Edition NFPA 72, 2002 ed. **c) Section/Paragraph** 4.4.7.1.1

2. **Proposal Recommends:** *(check one)* ☐ **new text** ☐ **revised text** ☒ **deleted text**

3. **Proposal.** *(Include proposed new or revised wording, or identification of wording to be deleted.)* Note: Proposed text should be in legislative format, that is, use underscore to denote wording to be inserted (inserted wording) and strike-through to denote wording to be deleted (~~deleted wording~~). Delete exception.

4. **Statement of Problem and Substantiation for Proposal.** Note: State the problem that will be resolved by your recommendation. Give the specific reason for your proposal including copies of tests, research papers, fire experience, etc. If more than 200 words, it may be abstracted for publication. A properly installed and maintained system should be free of ground faults. The occurrence of one or more ground faults should be required to cause a "trouble" signal because it indicates a condition that could contribute to future malfunction of the system. Ground fault protection has been widely available on these systems for years and its cost is negligible. Requiring it on all systems will promote better installations, maintenance and reliability.

5. ☒ **This Proposal is Original Material.** Note: Original material is considered to be the submitter's own idea based on or as a result of his/her own experience, thought, or research and, to the best of his/her knowledge, is not copied from another source.

   ☐ **This Proposal is Not Original Material; Its Source** ***(if known)*** **is as Follows:** _____

Sample

I hereby grant the NFPA all and full rights in copyright to this proposal, and I understand that I acquire no rights in any publication of NFPA in which this proposal in this or another similar or analogous form is used.

Signature ***(Required)*** John B. Smith

PLEASE USE SEPARATE FORM FOR EACH PROPOSAL • NFPA FAX (617) 770-3500

Mail to: Secretary, Standards Council • NFPA • 1 Batterymarch Park • PO Box 9101 • Quincy, MA 02269-9101

--`,,```,,-`-`,,`,,`,`,,`---

Copyright National Fire Protection Association
Provided by IHS under license with NFPA
No reproduction or networking permitted without license from IHS

Not for Resale

NFPA Technical Committee Document Proposal Form

Note: All proposals must be received by 5:00 p.m. EST/EDST on the published proposal closing date.

For further information on the standards-making process, please contact Codes and Standards Administration at 617-984-7249. For technical assistance, please call NFPA at 617-770-3000.

FOR OFFICE USE ONLY
Log #: _____
Date Rec'd: _____

Please indicate in which format you wish to receive your ROP/ROC: ☐ **CD ROM** ☐ **paper** ☐ **download**
(Note: In choosing the download option you intend to view the ROP/ROC from our Website. No copy will be sent to you.)

Date _____ **Name** _____ **Telephone** _____
Company _____
Address _____ **City** _____ **State** _____ **Zip** _____
Please indicate organization represented (if any) _____

1. **a) NFPA Document Title** _____
   b) NFPA No. & Edition _____ **c) Section/Paragraph** _____

2. **Proposal Recommends:** *(check one)* ☐ **new text** ☐ **revised text** ☐ **deleted text**

3. **Proposal.** *(Include proposed new or revised wording, or identification of wording to be deleted.)* Note: Proposed text should be in legislative format, that is, use underscore to denote wording to be inserted (inserted wording) and strike-through to denote wording to be deleted (~~deleted wording~~). _____

4. **Statement of Problem and Substantiation for Proposal.** Note: State the problem that will be resolved by your recommendation. Give the specific reason for your proposal including copies of tests, research papers, fire experience, etc. If more than 200 words, it may be abstracted for publication. _____

5. ☐ **This Proposal is Original Material.** Note: Original material is considered to be the submitter's own idea based on or as a result of his/her own experience, thought, or research and, to the best of his/her knowledge, is not copied from another source.

   ☐ **This Proposal is Not Original Material; Its Source *(if known)* is as Follows:** _____

I hereby grant the NFPA all and full rights in copyright to this proposal, and I understand that I acquire no rights in any publication of NFPA in which this proposal in this or another similar or analogous form is used.

Signature *(Required)* _____

PLEASE USE SEPARATE FORM FOR EACH PROPOSAL • NFPA FAX (617) 770-3500

Mail to: Secretary, Standards Council • NFPA • 1 Batterymarch Park • PO Box 9101 • Quincy, MA 02269-9101

--`,,```,-`-`,,`,,`,`,,`---

Copyright National Fire Protection Association
Provided by IHS under license with NFPA
No reproduction or networking permitted without license from IHS

Not for Resale