# NFPA 285

# Standard Fire Test Method for Evaluation of Fire Propagation Characteristics of Exterior Non-Load-Bearing Wall Assemblies Containing Combustible Components

## 2006 Edition

NFPA, 1 Batterymarch Park, Quincy, MA 02169-7471
An International Codes and Standards Organization

--`,,```,,-`-`,,`,,`,`,,`---

Copyright National Fire Protection Association
Provided by IHS under license with NFPA
No reproduction or networking permitted without license from IHS

Not for Resale

## IMPORTANT NOTICES AND DISCLAIMERS CONCERNING NFPA DOCUMENTS

### NOTICE AND DISCLAIMER OF LIABILITY CONCERNING THE USE OF NFPA DOCUMENTS

NFPA codes, standards, recommended practices, and guides, of which the document contained herein is one, are developed through a consensus standards development process approved by the American National Standards Institute. This process brings together volunteers representing varied viewpoints and interests to achieve consensus on fire and other safety issues. While the NFPA administers the process and establishes rules to promote fairness in the development of consensus, it does not independently test, evaluate, or verify the accuracy of any information or the soundness of any judgments contained in its codes and standards.

The NFPA disclaims liability for any personal injury, property or other damages of any nature whatsoever, whether special, indirect, consequential or compensatory, directly or indirectly resulting from the publication, use of, or reliance on this document. The NFPA also makes no guaranty or warranty as to the accuracy or completeness of any information published herein.

In issuing and making this document available, the NFPA is not undertaking to render professional or other services for or on behalf of any person or entity. Nor is the NFPA undertaking to perform any duty owed by any person or entity to someone else. Anyone using this document should rely on his or her own independent judgment or, as appropriate, seek the advice of a competent professional in determining the exercise of reasonable care in any given circumstances.

The NFPA has no power, nor does it undertake, to police or enforce compliance with the contents of this document. Nor does the NFPA list, certify, test or inspect products, designs, or installations for compliance with this document. Any certification or other statement of compliance with the requirements of this document shall not be attributable to the NFPA and is solely the responsibility of the certifier or maker of the statement.

Copyright National Fire Protection Association
Provided by IHS under license with NFPA
No reproduction or networking permitted without license from IHS
Not for Resale

## ADDITIONAL NOTICES AND DISCLAIMERS

### Updating of NFPA Documents

Users of NFPA codes, standards, recommended practices, and guides should be aware that these documents may be superseded at any time by the issuance of new editions or may be amended from time to time through the issuance of Tentative Interim Amendments. An official NFPA document at any point in time consists of the current edition of the document together with any Tentative Interim Amendments and any Errata then in effect. In order to determine whether a given document is the current edition and whether it has been amended through the issuance of Tentative Interim Amendments or corrected through the issuance of Errata, consult appropriate NFPA publications such as the National Fire Codes® Subscription Service, visit the NFPA website at www.nfpa.org, or contact the NFPA at the address listed below.

### Interpretations of NFPA Documents

A statement, written or oral, that is not processed in accordance with Section 6 of the Regulations Governing Committee Projects shall not be considered the official position of NFPA or any of its Committees and shall not be considered to be, nor be relied upon as, a Formal Interpretation.

### Patents

The NFPA does not take any position with respect to the validity of any patent rights asserted in connection with any items which are mentioned in or are the subject of NFPA codes, standards, recommended practices, and guides, and the NFPA disclaims liability for the infringement of any patent resulting from the use of or reliance on these documents. Users of these documents are expressly advised that determination of the validity of any such patent rights, and the risk of infringement of such rights, is entirely their own responsibility.

NFPA adheres to applicable policies of the American National Standards Institute with respect to patents. For further information contact the NFPA at the address listed below.

### Law and Regulations

Users of these documents should consult applicable federal, state, and local laws and regulations. NFPA does not, by the publication of its codes, standards, recommended practices, and guides, intend to urge action that is not in compliance with applicable laws, and these documents may not be construed as doing so.

### Copyrights

This document is copyrighted by the NFPA. It is made available for a wide variety of both public and private uses. These include both use, by reference, in laws and regulations, and use in private self-regulation, standardization, and the promotion of safe practices and methods. By making this document available for use and adoption by public authorities and private users, the NFPA does not waive any rights in copyright to this document.

Use of NFPA documents for regulatory purposes should be accomplished through adoption by reference. The term "adoption by reference" means the citing of title, edition, and publishing information only. Any deletions, additions, and changes desired by the adopting authority should be noted separately in the adopting instrument. In order to assist NFPA in following the uses made of its documents, adopting authorities are requested to notify the NFPA (Attention: Secretary, Standards Council) in writing of such use. For technical assistance and questions concerning adoption of NFPA documents, contact NFPA at the address below.

### For Further Information

All questions or other communications relating to NFPA codes, standards, recommended practices, and guides and all requests for information on NFPA procedures governing its codes and standards development process, including information on the procedures for requesting Formal Interpretations, for proposing Tentative Interim Amendments, and for proposing revisions to NFPA documents during regular revision cycles, should be sent to NFPA headquarters, addressed to the attention of the Secretary, Standards Council, NFPA, 1 Batterymarch Park, P.O. Box 9101, Quincy, MA 02269-9101.

For more information about NFPA, visit the NFPA website at www.nfpa.org.

--`,,```,,-`-`,,`,,`,`,,`---

Copyright National Fire Protection Association
Provided by IHS under license with NFPA
No reproduction or networking permitted without license from IHS
Not for Resale

Copyright © 2005, National Fire Protection Association, All Rights Reserved

**NFPA 285**

# Standard Fire Test Method for Evaluation of Fire Propagation Characteristics of Exterior Non-Load-Bearing Wall Assemblies Containing Combustible Components

## 2006 Edition

This edition of NFPA 285, *Standard Fire Test Method for Evaluation of Fire Propagation Characteristics of Exterior Non-Load-Bearing Wall Assemblies Containing Combustible Components*, was prepared by the Technical Committee on Fire Tests and acted on by NFPA at its June Association Technical Meeting held June 6–10, 2005, in Las Vegas, NV. It was issued by the Standards Council on July 29, 2005, with an effective date of August 18, 2005, and supersedes all previous editions.

This edition of NFPA 285 was approved as an American National Standard on August 18, 2005.

## Origin and Development of NFPA 285

The 1998 edition was the first for this standard. It established a test method, developed through a consensus process, for determining the flammability characteristics of exterior non-load-bearing wall assemblies or panels. The Committee's intention was to establish a standard that could be adopted or referenced by other applicable documents, such as the model building codes. The standard was introduced to regulate and address the introduction of combustible materials into exterior walls of all construction types.

The 2006 edition includes a complete editorial rewrite for compliance with the *Manual of Style for NFPA Technical Committee Documents*. Further organizational and editorial changes were made to improve the application of the test method, and the scope and purpose of the document were revised to clarify the document's intent. Technical changes address details about the test specimen, documentation of the fire test, and testing instrumentation. Historical information describing the development of NFPA 285 also has been added as annex material.

Copyright National Fire Protection Association
Provided by IHS under license with NFPA
No reproduction or networking permitted without license from IHS
Not for Resale

## Technical Committee on Fire Tests

**William E. Fitch,** *Chair*
Omega Point Laboratories Inc., TX [RT]

**Jesse J. Beitel,** Hughes Associates, Inc., MD [SE]
**April L. Berkol,** Starwood Hotels and Resorts Worldwide, Inc., NY [U]
Rep. American Hotel and Lodging Association
**Robert G. Bill, Jr.,** FM Global, MA [I]
**John A. Blair,** The DuPont Company, DE [M]
Rep. Society of the Plastics Industry, Inc.
**Gordon H. Damant,** Inter-City Testing and Consulting Corp. of California, CA [SE]
**Thomas W. Fritz,** Armstrong World Industries, Inc., PA [M]
**Pravinray D. Gandhi,** Underwriters Laboratories Inc., IL [RT]
**James R. Griffith,** Southwest Research Institute, TX [RT]
**Gordon E. Hartzell,** Hartzell Consulting, Inc., TX [SE]
**Marcelo M. Hirschler,** GBH International, CA [SE]
**Alfred J. Hogan,** Reedy Creek Improvement District, FL [E]
Rep. International Fire Marshals Association
**William E. Koffel,** Koffel Associates, Inc., MD [SE]
**James R. Lawson,** U.S. National Institute of Standards and Technology, MD [RT]
**Rodney A. McPhee,** Canadian Wood Council, Canada [M]
**Frederick W. Mowrer,** University of Maryland, MD [SE]
**David T. Sheppard,** U.S. Department of Justice, MD [RT]
**Kuma Sumathipala,** American Forest and Paper Association, DC [M]
**T. Hugh Talley,** Hugh Talley Company, TN [M]
Rep. Upholstered Furniture Action Council
**Rick Thornberry,** The Code Consortium, Inc., CA [SE]
**William A. Webb,** Schirmer Engineering Corporation, IL [I]
**Robert A. Wessel,** Gypsum Association, DC [M]
**Robert J. Wills,** American Iron and Steel Institute, AL [M]
**Peter J. Willse,** GE Global Asset Protection Services, CT [I]

### Alternates

**Robert M. Berhinig,** Underwriters Laboratories Inc., IL [RT]
(Alt. to P. D. Gandhi)
**Delbert F. Boring, Jr.,** American Iron and Steel Institute, OH [M]
(Alt. to R. J. Wills)
**Richard J. Davis,** FM Global, MA [I]
(Alt. to R. G. Bill)
**Sam W. Francis,** American Forest and Paper Association, PA [M]
(Alt. to K. Sumathipala)
**Richard G. Gann,** U.S. National Institute of Standards and Technology, MD [RT]
(Alt. to J. R. Lawson)
**Paul A. Hough,** Armstrong World Industries, Inc., PA [M]
(Alt. to T. W. Fritz)
**Marc L. Janssens,** Southwest Research Institute, TX [RT]
(Alt. to J. R. Griffith)
**James K. Lathrop,** Koffel Associates, Inc., CT [SE]
(Alt. to W. E. Koffel)
**James A. Milke,** University of Maryland, MD [SE]
(Alt. to F. W. Mowrer)
**Arthur J. Parker,** Hughes Associates, Inc., MD [SE]
(Alt. to J. J. Beitel)
**Ronald A. Schulz,** GE Global Asset Protection Services, MI [I]
(Alt. to P. J. Willse)
**Ineke Van Zeeland,** Canadian Wood Council, Canada [M]
(Alt. to R. A. McPhee)
**Joe Ziolkowski,** American Furniture Manufacturers Association, NC [M]
(Alt. to T. H. Talley)

### Nonvoting

**Robert H. Barker,** American Fiber Manufacturers Association, VA [M]
(Alt. to Nonvoting Principal)
**Tod L. Jilg,** Hoechst Celanese Corporation, NC [M]
Rep. American Fiber Manufacturers Association
**Rohit Khanna,** U.S. Consumer Product Safety Commission, MD [C]

**Milosh T. Puchovsky,** NFPA Staff Liaison

*This list represents the membership at the time the Committee was balloted on the final text of this edition. Since that time, changes in the membership may have occurred. A key to classifications is found at the back of the document.*

NOTE: Membership on a committee shall not in and of itself constitute an endorsement of the Association or any document developed by the committee on which the member serves.

**Committee Scope:** This Committee shall have primary responsibility for documents on fire testing procedures, for reviewing existing fire test standards and recommending appropriate action to NFPA, for recommending the application of and advising on the interpretation of acceptable test standards for fire problems of concern to NFPA technical committees and members, and for acting in a liaison capacity between NFPA and the committees of other organizations writing fire test standards. This Committee does not cover fire tests that are used to evaluate extinguishing agents, devices, or systems.


--`,,```,-`-`,,`,,`,`,,`---

Copyright National Fire Protection Association
Provided by IHS under license with NFPA
No reproduction or networking permitted without license from IHS
Not for Resale

## Contents


**Chapter 1 Administration** ..... **285–** 4
1.1 Scope ..... **285–** 4
1.2 Purpose ..... **285–** 4
1.3 Application ..... **285–** 4

**Chapter 2 Referenced Publications** ..... **285–** 4
2.1 General ..... **285–** 4
2.2 NFPA Publications. (Reserved) ..... **285–** 4
2.3 Other Publications ..... **285–** 4
2.4 References for Extracts in Mandatory Sections ..... **285–** 4

**Chapter 3 Definitions** ..... **285–** 4
3.1 General ..... **285–** 4
3.2 NFPA Official Definitions ..... **285–** 4
3.3 General Definitions ..... **285–** 5

**Chapter 4 Test Facility and Apparatus** ..... **285–** 5
4.1 Test Facility ..... **285–** 5
4.2 Test Apparatus ..... **285–** 5
4.3 Movable Test Frame ..... **285–** 6
4.4 Burners ..... **285–** 6

**Chapter 5 Test Specimens** ..... **285–** 7
5.1 Location of Test Specimens ..... **285–** 7
5.2 Specimen Mounting ..... **285–** 7
5.3 Size of Test Specimen ..... **285–** 7
5.4 Position of Test Specimen ..... **285–** 7
5.5 Window Opening ..... **285–** 7
5.6 Securing Test Specimen to Test Apparatus ..... **285–** 7
5.7 Construction Details of Test Specimen ..... **285–** 9
5.8 Curing Period ..... **285–** 9

**Chapter 6 Instrumentation** ..... **285–** 9
6.1 Temperature Measurements ..... **285–** 9
6.2 Gas Flow Meters ..... **285–** 9
6.3 Thermocouples ..... **285–** 9

**Chapter 7 Calibration Procedure** ..... **285–**11
7.1 Calibration Test Procedure ..... **285–**11
7.2 Frequency of Calibration ..... **285–**11

**Chapter 8 Fire Test Procedure** ..... **285–**13
8.1 Test Procedure ..... **285–**13

**Chapter 9 Data Collection and Observation** ..... **285–**14
9.1 Duration ..... **285–**14
9.2 Data Recording ..... **285–**14
9.3 Visual Observations ..... **285–**14
9.4 Determination of Height and Depth of Damage ..... **285–**14

**Chapter 10 Conditions of Acceptance** ..... **285–**14
10.1 Test Specimen ..... **285–**14
10.2 Performance Criteria ..... **285–**14

**Chapter 11 Report** ..... **285–**15
11.1 Fire Test Report ..... **285–**15

**Annex A Explanatory Material** ..... **285–**16

**Annex B Informational References** ..... **285–**18

**Index** ..... **285–**19




Copyright National Fire Protection Association
Provided by IHS under license with NFPA
No reproduction or networking permitted without license from IHS
Not for Resale

**NFPA 285**

# Standard Fire Test Method for Evaluation of Fire Propagation Characteristics of Exterior Non-Load-Bearing Wall Assemblies Containing Combustible Components

**2006 Edition**

***IMPORTANT NOTE: This NFPA document is made available for use subject to important notices and legal disclaimers. These notices and disclaimers appear in all publications containing this document and may be found under the heading "Important Notices and Disclaimers Concerning NFPA Documents." They can also be obtained on request from NFPA or viewed at www.nfpa.org/disclaimers.***

NOTICE: An asterisk (*) following the number or letter designating a paragraph indicates that explanatory material on the paragraph can be found in Annex A.

A reference in brackets [ ] following a section or paragraph indicates material that has been extracted from another NFPA document. As an aid to the user, the complete title and edition of the source documents for extracts in mandatory sections of the document are given in Chapter 2 and those for extracts in informational sections are given in Annex B. Editorial changes to extracted material consist of revising references to an appropriate division in this document or the inclusion of the document number with the division number when the reference is to the original document. Requests for interpretations or revisions of extracted text shall be sent to the technical committee responsible for the source document.

Information on referenced publications can be found in Chapter 2 and Annex B.

## Chapter 1 Administration

**1.1* Scope.**

**1.1.1*** This standard provides a test method for determining the fire propagation characteristics of exterior non-load-bearing wall assemblies and panels used as components of curtain wall assemblies, constructed using combustible materials or that incorporate combustible components, that are intended to be installed on buildings required to have exterior walls of noncombustible construction.

**1.1.2*** The fire propagation characteristics are determined for post-flashover fires of interior origin.

**1.2 Purpose.** The purpose of this standard is to provide a standardized fire test procedure for evaluating the suitability of exterior non-load-bearing wall assemblies and panels used as components of curtain wall assemblies, constructed using combustible materials or that incorporate combustible components, for installation on buildings where the exterior walls are required to be noncombustible.

**1.3 Application.**

**1.3.1** This standard shall be used to evaluate the fire propagation characteristics of exterior non-load-bearing wall assemblies and panels used as components of curtain wall assemblies that are constructed using combustible materials or that incorporate combustible components within the wall assemblies as specified in the following:

(1) The ability of the wall assembly to resist flame propagation over the exterior face of the wall assembly
(2) The ability of the wall assembly to resist vertical flame propagation within the combustible core or within other combustible components from one story to the next
(3) The ability of the wall assembly to resist vertical flame propagation over the interior surface of the wall assembly from one story to the next
(4) The ability of the wall assembly to resist lateral flame propagation from the compartment of fire origin to adjacent compartments or spaces

**1.3.2** The application of this standard to actual field installations of exterior non-load-bearing wall assemblies and panels used as components of curtain wall assemblies shall not limit the use of the methods and materials employed to seal the gap between the edge of the second floor slab and the interior surface of the test specimen during the test, provided approved sealing methods and materials are used in the field.

**1.3.3** This standard requires both visual observations made by laboratory personnel conducting the test and temperature data recorded during the test.

## Chapter 2 Referenced Publications

**2.1 General.** The documents or portions thereof listed in this chapter are referenced within this standard and shall be considered part of the requirements of this document.

**2.2 NFPA Publications. (Reserved)**

**2.3 Other Publications.**

**2.3.1 ASTM Publication.** American Society for Testing and Materials, 100 Barr Harbor Drive, West Conshohocken, PA 19428-2959.

ASTM C 36, *Standard Specification for Gypsum Wallboard*, 1995.

ASTM E 136, *Standard Test Method for Behavior of Materials in a Vertical Tube Furnace at 750°C*, 2004.

**2.3.2 Other Publication.** *Merriam-Webster's Collegiate Dictionary*, 11th edition, Merriam-Webster, Inc., Springfield, MA, 2003.

**2.4 References for Extracts in Mandatory Sections.**

*NFPA 5000®, Building Construction and Safety Code®,* 2006 edition.

## Chapter 3 Definitions

**3.1 General.** The definitions contained in this chapter shall apply to the terms used in this standard. Where terms are not defined in this chapter or within another chapter, they shall be defined using their ordinarily accepted meanings within the context in which they are used. *Merriam-Webster's Collegiate Dictionary,* 11th edition, shall be the source for the ordinarily accepted meaning.

**3.2 NFPA Official Definitions.**

**3.2.1* Approved.** Acceptable to the authority having jurisdiction.

**3.2.2* Authority Having Jurisdiction (AHJ).** An organization, office, or individual responsible for enforcing the requirements



Copyright National Fire Protection Association
Provided by IHS under license with NFPA
No reproduction or networking permitted without license from IHS
Not for Resale

of a code or standard, or for approving equipment, materials, an installation, or a procedure.

**3.2.3 Labeled.** Equipment or materials to which has been attached a label, symbol, or other identifying mark of an organization that is acceptable to the authority having jurisdiction and concerned with product evaluation, that maintains periodic inspection of production of labeled equipment or materials, and by whose labeling the manufacturer indicates compliance with appropriate standards or performance in a specified manner.

**3.2.4 Shall.** Indicates a mandatory requirement.

**3.2.5 Should.** Indicates a recommendation or that which is advised but not required.

**3.2.6 Standard.** A document, the main text of which contains only mandatory provisions using the word "shall" to indicate requirements and which is in a form generally suitable for mandatory reference by another standard or code or for adoption into law. Nonmandatory provisions shall be located in an appendix or annex, footnote, or fine-print note and are not to be considered a part of the requirements of a standard.

**3.3 General Definitions.**

**3.3.1 Combustible (Material).** A material that, in the form in which it is used and under the conditions anticipated, will ignite and burn; a material that does not meet the definition of noncombustible or limited-combustible. [**5000,** 2006]

**3.3.2 Noncombustible Material.** A material that, in the form in which it is used and under the conditions anticipated, will not ignite, burn, support combustion, or release flammable vapors, when subjected to fire or heat. Materials that are reported as passing ASTM E 136, *Standard Test Method for Behavior of Materials in a Vertical Tube Furnace at 750°C*, shall be considered noncombustible materials. [**5000,** 2006]

**3.3.3 Test Specimen.** The exterior non-load-bearing wall assembly to be tested in accordance with this fire test method.

## Chapter 4 Test Facility and Apparatus

**4.1 Test Facility.**

**4.1.1** The test apparatus described in Section 4.2 shall be located inside a test facility.

**4.1.2** The test facility shall have minimum dimensions of 30 ft wide × 30 ft deep × 23 ft high (9.1 m × 9.1 m × 7.0 m).

**4.1.3** The test facility shall have provisions for supplying combustion makeup air taken from the outside during the test.

**4.1.4** The test facility shall be constructed to allow for the exhaust of the combustion by-products during the test while not inducing an airflow on the exterior face of the test specimen.

**4.1.5** The test facility shall protect the test apparatus and test specimen from exposure to wind and precipitation.

**4.2 Test Apparatus.**

**4.2.1** The test apparatus shall consist of a two-story structure having a height of 15 ft 8 in. ± 1 in. (4.8 m ± 25 mm) with a test room on each story.

**4.2.2** Each test room shall have unfinished inside dimensions of 10 ft ± 0.5 in. wide × 10 ft ± 0.5 in. deep (3.05 m ± 13 mm × 3.05 m ± 13 mm) with an unfinished floor-to-ceiling height of 7 ft ± 0.5 in. (2.13 m ± 13 mm).

**4.2.3*** The test apparatus shall be constructed in accordance with Figure 4.2.3.

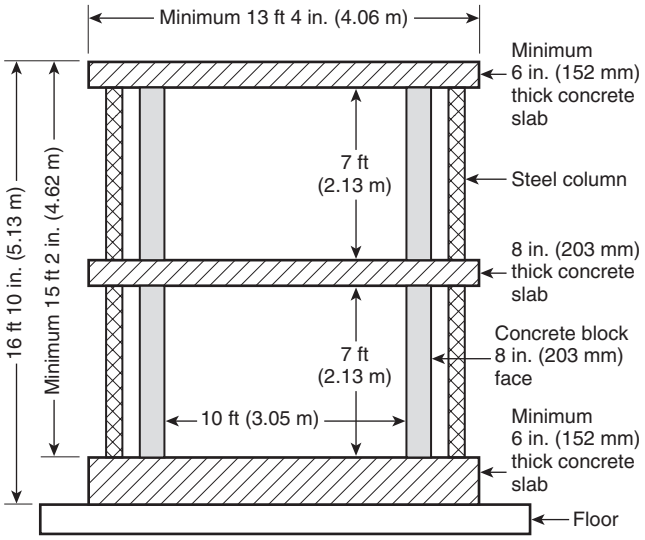


**FIGURE 4.2.3 Front View of Test Apparatus Structure (not to scale).**

**4.2.4** The slabs shall be constructed of reinforced concrete.

**4.2.5** The upper two slabs shall be supported by steel columns designed to support the loads, and the columns shall not be located inside the test rooms.

**4.2.6** The thickness of the concrete slabs shall be as follows:

(1) The first-story slab shall be not less than 6 in. (152 mm) thick.
(2) The second-story slab shall be not less than 8 in. ± 0.5 in. (203 mm ± 13 mm) thick.
(3) The top slab shall be not less than 6 in. ± 0.5 in. (152 mm ± 13 mm) thick.

**4.2.7** The three permanent walls (one rear wall and two side walls) that form each test room shall be constructed of 8 in. ± 0.05 in. (203 mm ± 13 mm) concrete block or equivalent construction.

**4.2.8** The interior surfaces of the first-story test room shall be protected as follows:

(1) Walls and ceiling shall be covered with one layer of nominal ⅝ in. (16 mm) thick Type X gypsum wallboard conforming to ASTM C 36, *Standard Specification for Gypsum Wallboard*, and one layer of nominal 1.5 in. (38 mm) thick nominal 8 lb/ft$^3$ (128 kg/m$^3$) density ceramic fiber insulation on the interior face.
(2) The total thickness of the protection shall not exceed 2.5 in. (64 mm).
(3) The slab shall be covered with two layers of nominal ⅝ in. (16 mm) thick gypsum wallboard.

**4.2.9** Insulation shall not be required in the second-story test room.



--`,,```,-`-`,,`,,`,`,,`---
Copyright National Fire Protection Association
Provided by IHS under license with NFPA
No reproduction or networking permitted without license from IHS
Not for Resale

**4.2.10** Each story shall have one access opening approximately 3.5 ft wide × 6.75 ft high (1.1 m × 2.1 m).

**4.2.11** The first-story access opening shall be located in one of the side walls, and the second-story access opening shall be located in the rear wall of the test room.

**4.2.12** The access door opening for the first-story test room shall be capable of being closed during the fire test.

**4.2.13** Additional access openings shall be permitted in the second-story test room walls for instrumentation and video.

**4.2.14** Wall assemblies shall be constructed directly onto the exterior face of the test apparatus or onto a movable test frame that can be fastened to the exterior face of the test apparatus.

**4.3 Movable Test Frame.**

**4.3.1** The movable test frame shall comply with 4.3.1.1 through 4.3.1.3.

**4.3.1.1** The frame shall be designed such that the nominal 4 in. × 4 in. × 3⁄16 in. (102 mm × 102 mm × 5 mm) angles meet at the top of the respective floor lines on the test apparatus.

**4.3.1.2** The frame shall be constructed to prevent racking or movement of the wall assembly during movement of the frame and fastening of the frame to the test apparatus.

**4.3.1.3** The frame shown in Figure 4.3.1.3 shall be used to determine the minimum size of the wall assembly.

**4.4 Burners.**

**4.4.1** The burner arrangement shall consist of two gas-fired burners.

**4.4.2** One burner shall be placed inside the first-story test room, and the other burner shall be placed inside the first-story window opening of the wall assembly.

**4.4.3** The test room burner shall be constructed of nominal 2 in. (51 mm) outside diameter steel pipe with nominal 1⁄8 in. (3 mm) diameter holes spaced a nominal 1 in. (25 mm) on center.

**4.4.4** The burner holes shall be located along the top surface of the pipe.

**4.4.5** The first hole shall be located 3.5 ft (1.06 m) from the rear wall on both sides of the gas supply pipes and continue across the front gas supply pipe.

**4.4.6** The gas supply pipe located within the test room shall be wrapped with a single layer of nominal 1 in. (25 mm) thick nominal 8 lb/ft$^3$ (128 kg/m$^3$) density ceramic fiber blanket.

**4.4.7** The burner shall be positioned with its centerline 2.5 ft ± 1 in. (0.8 m ± 25 mm) above the floor.

**4.4.8*** Figure 4.4.8 shall be used to determine the design of the first-story test room burner.

**4.4.9** The window gas burner shall consist of a 60 in. ± 0.5 in. (1520 mm ± 13 mm) length of nominal 2 in. (51 mm) outside diameter pipe having a 0.5 in. ± 0.06 in. (13 mm ± 1.5 mm) wide × 44 in. ± 0.5 in. (1118 mm ± 13 mm) long slot.

**4.4.10** The burner shall be supplied with gas at both ends through nominal 1 in. (25 mm) outside diameter pipe.

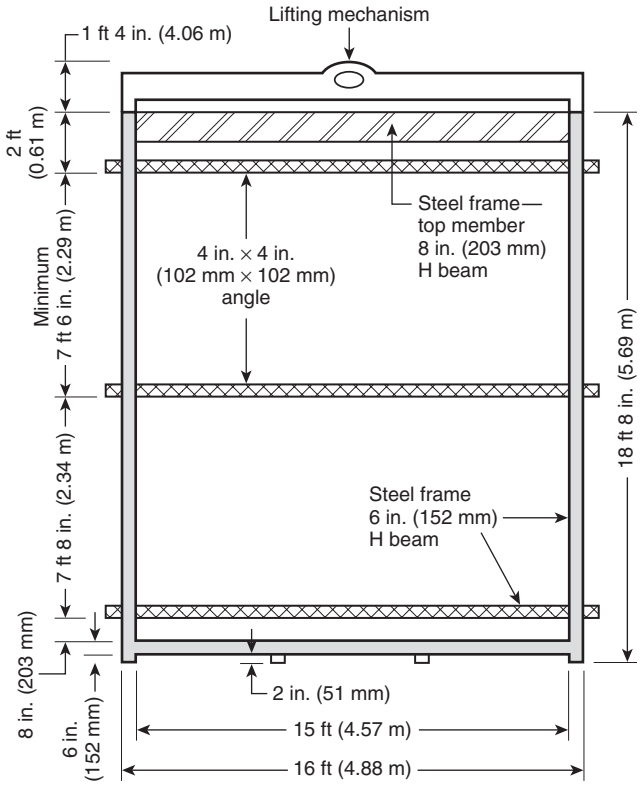


**FIGURE 4.3.1.3 Front View of Movable Wall Frame (not to scale).**

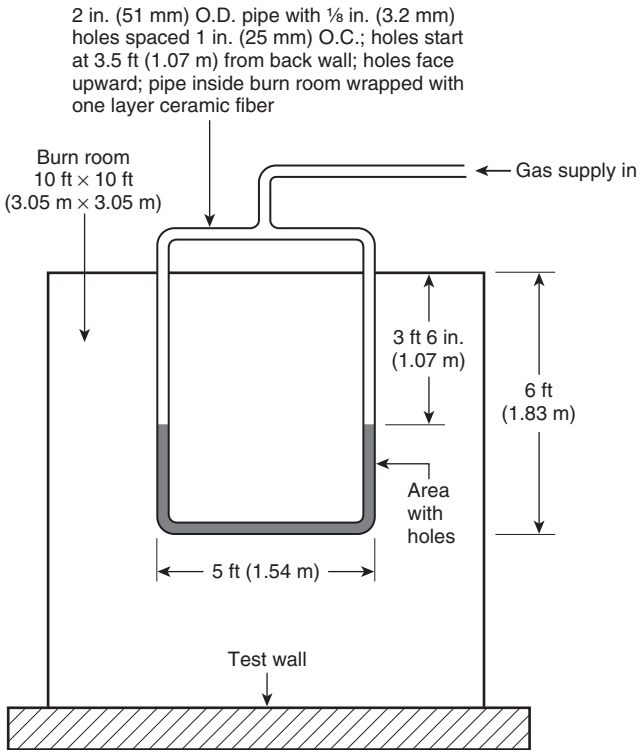


**FIGURE 4.4.8 Burn Room Burner — Plan View (not to scale).**



--`,,```,,-`-`,,`,,`,`,,`---
Copyright National Fire Protection Association
Provided by IHS under license with NFPA
No reproduction or networking permitted without license from IHS
Not for Resale

**4.4.11** Figure 4.4.11 shall be used to determine the design of the window burner.

**4.4.12** The window burner shall be wrapped with a layer of nominal 1 in. (25 mm) thick nominal 8 lb/ft$^3$ (128 kg/m$^3$) density ceramic fiber blanket.

**4.4.13** The burner shall be permitted to be mounted on a movable trolley.

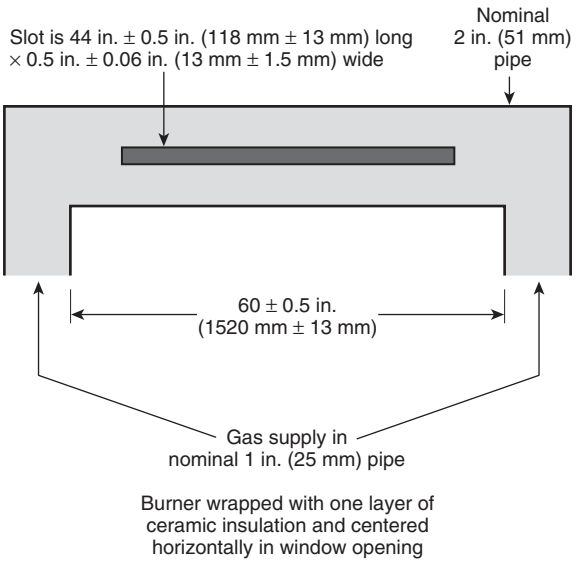


**FIGURE 4.4.11 Plan View of Window Burner (not to scale).**

**4.4.14** During the fire test, the burner shall be positioned so the slot is located on the top surface of the pipe and centered horizontally in the first-story test room window opening.

**4.4.15** The horizontal centerline of the burner shall be positioned 9 in. ± 0.5 in (230 mm ± 13 mm) below the bottom surface of the window header.

**4.4.16** The vertical centerline of the burner shall be positioned between 0 in. and 5 in. (0 mm and 130 mm) from the exterior face of the wall assembly.

**4.4.17** The final position of the window burner from the exterior face of the wall assembly shall be determined from the calibration procedure.

**4.4.18*** The burners shall be fired during the fire test according to the calibration gas flow rates shown in Table 4.4.18.

**4.4.19** Each burner shall attain its assigned gas flow rate within 15 seconds of each specified change in the gas flow rate.

**4.4.20** During the calibration procedure, if it is demonstrated that the burners must follow different gas flow rates to attain the prescribed test room and exterior face temperatures and heat fluxes, then the gas flows determined from the calibration tests shall be used.

## Chapter 5 Test Specimens

**5.1 Location of Test Specimens.** The test specimens shall be constructed on the front face of the test apparatus or on the movable test frame specified in 4.3.1.

**5.2 Specimen Mounting.** Figure 5.2(a) through Figure 5.2(c) shall be used to determine the test specimen mounting on the front face of the test apparatus.

**5.3 Size of Test Specimen.** The test specimen shall be not less than 17.5 ft high × 13.3 ft wide (5.3 m × 4.1 m).

**5.4 Position of Test Specimen.**

**5.4.1** The edges of the test specimen shall be positioned as follows:

(1) Below the top of the first floor slab not less than 2 in. (51 mm)
(2) Above the top of the test apparatus not less than 2 ft (0.6 m)
(3) Beyond the outside edges of the side walls not less than 1 ft (0.305 m)

**5.4.2** The test specimen shall completely cover the front face of the test apparatus except for a window opening located in the test specimen at the first story.

**5.5 Window Opening.**

**5.5.1** The window opening shall be 30 in. ± 0.5 in. high × 78 in. ± 0.5 in. wide (760 mm ± 13 mm high × 1980 mm ± 13 mm wide) with a sill height of 30 in. ± 0.5 in. (760 mm ± 13 mm).

**5.5.2** The window opening shall be centered horizontally with respect to the test room.

**5.6 Securing Test Specimen to Test Apparatus.**

**5.6.1** The test specimen shall be secured to the test apparatus using a girt system of replaceable nominal 4 in. × 4 in. × 3⁄16 in. (102 mm × 102 mm × 5 mm) steel angles.

**5.6.2** A removable spandrel beam shall be mounted on the underside of the second-story floor slab where required for the attachment of the test specimen to the test apparatus.

**Table 4.4.18 Calibration Flow Rates (Based on Natural Gas)**

| Time Interval | Room Burner | | Room Burner | | Window Burner | | Window Burner | |
|---|---|---|---|---|---|---|---|---|
| | SCFM | m$^3$/min | kW | Btu/min | SCFM | m$^3$/min | kW | Btu/min |
| 0:00–5:00 | 38.0 | 1.08 | 687 | 39,064 | 0.0 | 0.00 | 0 | 0 |
| 5:00–10:00 | 38.0 | 1.08 | 687 | 39,064 | 9.0 | 0.25 | 163 | 9,252 |
| 10:00–15:00 | 43.0 | 1.22 | 777 | 44,204 | 12.0 | 0.34 | 217 | 12,336 |
| 15:00–20:00 | 46.0 | 1.30 | 831 | 47,288 | 16.0 | 0.45 | 289 | 16,448 |
| 20:00–25:00 | 46.0 | 1.30 | 831 | 47,288 | 19.0 | 0.54 | 343 | 19,532 |
| 25:00–30:00 | 50.0 | 1.42 | 904 | 51,400 | 22.0 | 0.62 | 398 | 22,616 |



Copyright National Fire Protection Association
Provided by IHS under license with NFPA
No reproduction or networking permitted without license from IHS
Not for Resale

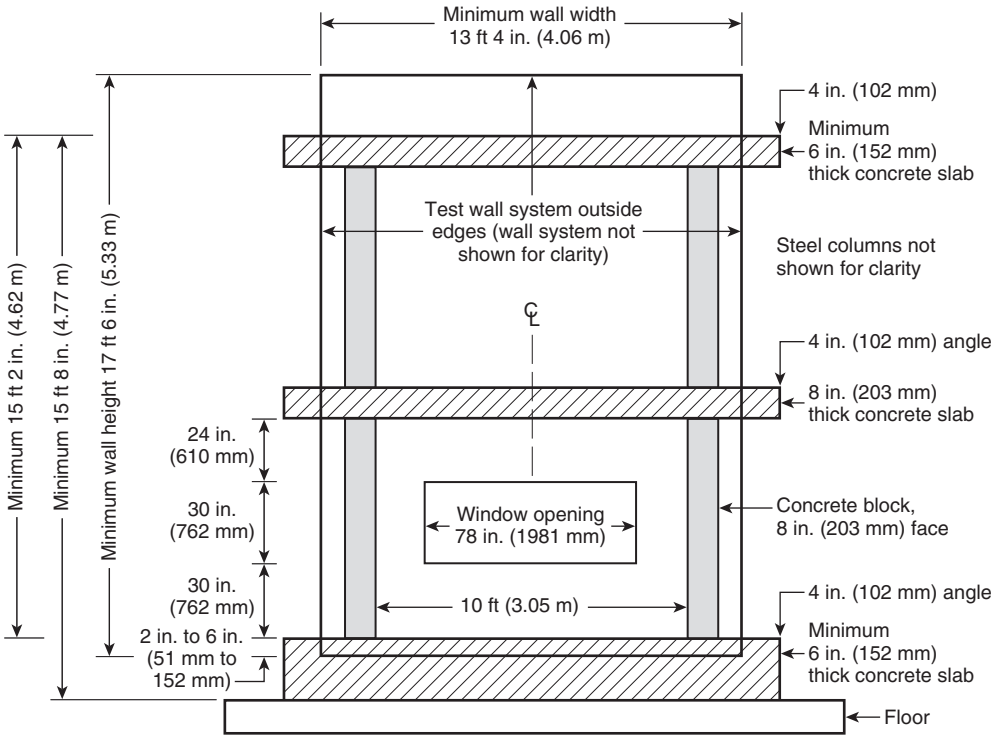


**FIGURE 5.2(a) Front View of Test Specimen Built in Place on Test Apparatus (not to scale).**

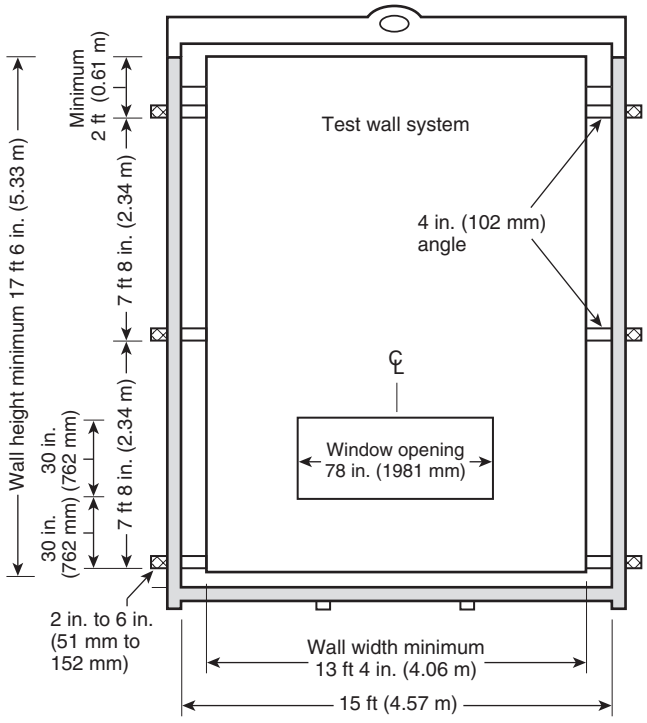


**FIGURE 5.2(b) Front View of Test Specimen in Movable Test Frame (not to scale).**

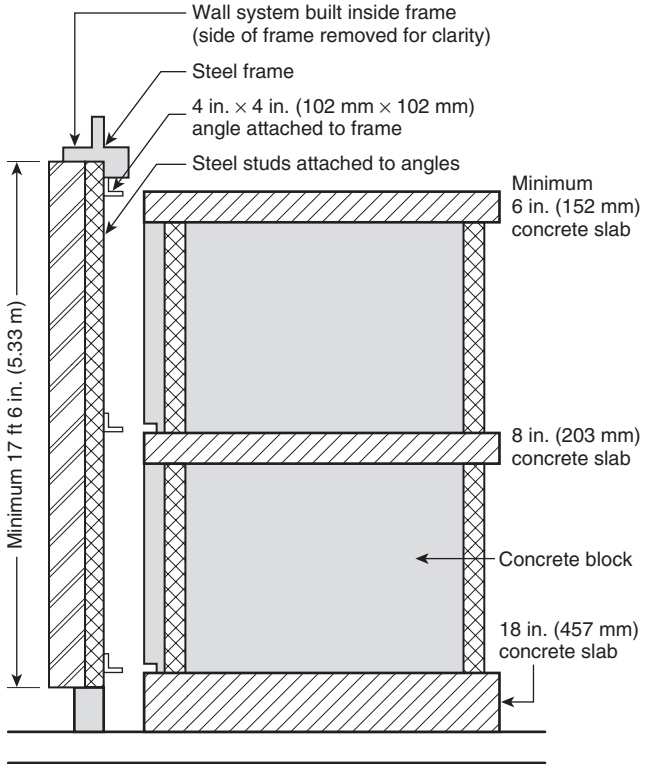


**FIGURE 5.2(c) Side View of Test Specimen in Movable Test Frame (not to scale).**



Copyright National Fire Protection Association
Provided by IHS under license with NFPA
No reproduction or networking permitted without license from IHS
Not for Resale

**5.6.2.1*** Where used, the spandrel beam shall be a W8×21 (W200×31) wide flange steel beam.

**5.6.2.2** Where used, the spandrel beam shall extend completely across the burn room compartment between the interior wall surfaces of the two side walls of the first-story test room.

**5.6.2.3** Where used, the spandrel beam shall be either protected or unprotected at the discretion of the test laboratory or the client.

**5.6.2.4** Where the spandrel beam is used and is determined to be protected, one layer of nominal 1 in. (25 mm) thick nominal 6 lb/ft$^3$ (96 kg/m$^3$) ceramic fiber blanket shall be used to protect the beam.

**5.6.2.5** Outriggers and other connections provided to the spandrel beam shall not be protected.

**5.7 Construction Details of Test Specimen.**

**5.7.1** The test specimen shall be constructed and secured to the test apparatus using fastening and construction details representative of actual field installations as specified by the manufacturer.

**5.7.2*** Details of the construction of the test specimen shall be in accordance with the manufacturer's instructions.

**5.7.3*** Where the test specimen contains vertical or horizontal joints or seams, joints or seams representative of standard construction practices shall be incorporated into the test specimen.

**5.8 Curing Period.** Prior to the fire test, the test specimen shall be cured as required by the manufacturer.

**5.8.1** In the case of cementitious coatings or materials, not less than 28 days shall elapse from completion of construction of the test specimen to fire testing the test specimen.

**5.8.2** During the curing period, the wall assemblies shall be protected from exposure to the weather.

## Chapter 6 Instrumentation

**6.1 Temperature Measurements.** Temperature measurements shall be taken at the following locations:

(1) Exterior face of the test specimen, as shown in Figure 6.1(a)
(2) Core of the test specimen as shown in Figure 6.1(a) and Figure 6.1(b)
(3) Interior surface of the test specimen as shown in Figure 6.1(c)
(4) First-story test room ceiling area as shown in Figure 6.1(d)

**6.2 Gas Flow Meters.** Each burner shall have gas flow metering equipment to measure the expected flow rates for each burner to within 5 percent.

**6.3 Thermocouples.** Temperature measurements shall be made using 20-gauge Type K thermocouples, except that those used to measure the temperatures shown in Figure 6.1(d) shall be 18-gauge Type K thermocouples.

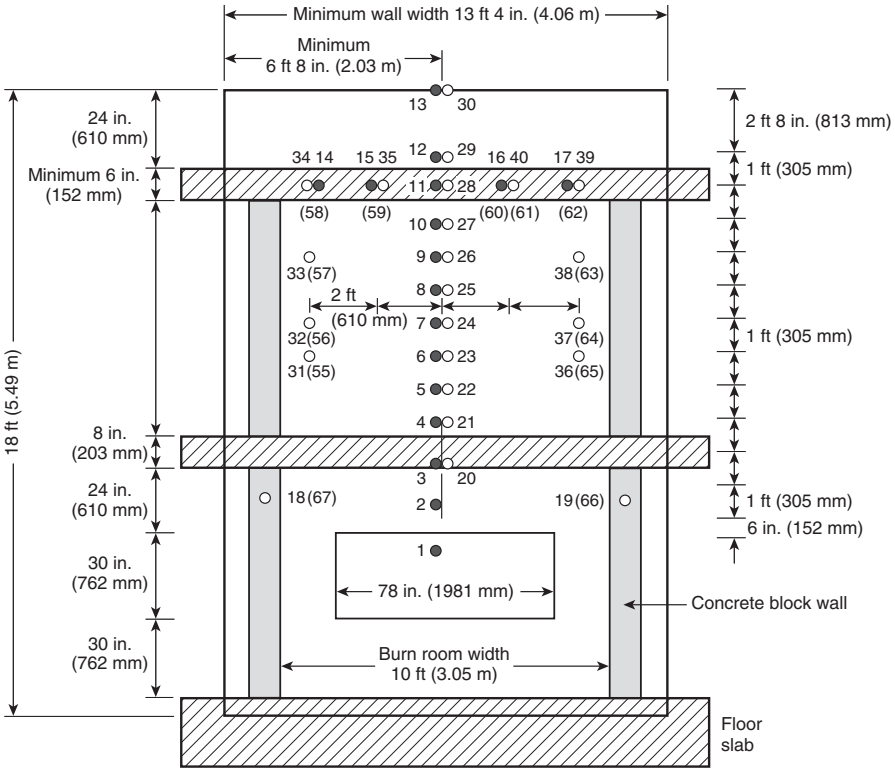


● Thermocouples — 1 in. (25 mm) from exterior wall surface
○ Thermocouples — In core/air space [see Figure 6.1(b)]
(Thermocouples) — Additional thermocouples [see Figure 6.1(b), Part C]

**FIGURE 6.1(a) Exterior Face of the Test Specimen. Instrumentation arrangement.**



Copyright National Fire Protection Association
Provided by IHS under license with NFPA
No reproduction or networking permitted without license from IHS
Not for Resale

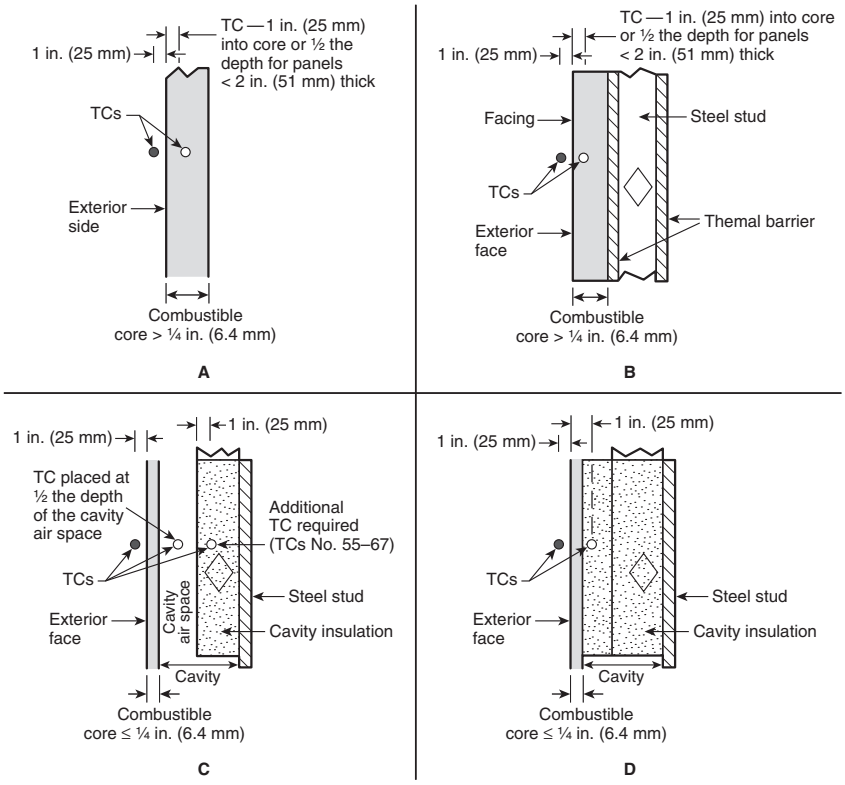


Note: TCs = thermocouples

**FIGURE 6.1(b) Instrumentation Arrangement.**

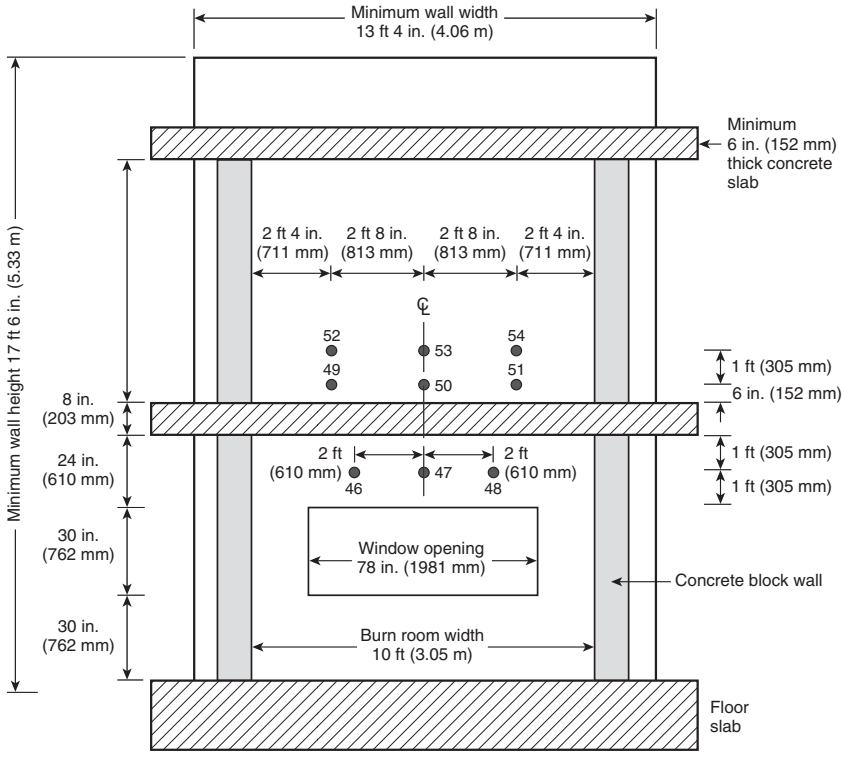


**FIGURE 6.1(c) Interior View of the Test Specimen. Instrumentation arrangement.**



Copyright National Fire Protection Association
Provided by IHS under license with NFPA
No reproduction or networking permitted without license from IHS
Not for Resale

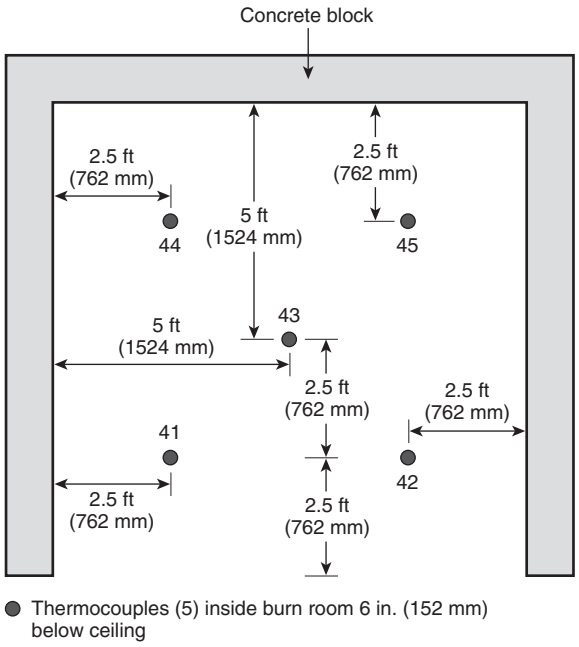


**FIGURE 6.1(d) Plan View — First-Story Test Room. Instrumentation arrangement.**

## Chapter 7 Calibration Procedure

**7.1 Calibration Test Procedure.** A calibration test shall be performed to determine the gas flow rates of the gas burners to be used in the fire test procedure prescribed in Chapter 8.

**7.1.1*** The test specimen for the calibration test shall be constructed of two layers of nominal ⅝ in. (16 mm) thick Type X gypsum wallboard applied to both sides of nominal 18-gauge steel studs spaced 24 in. (610 mm) on center.

**7.1.2** Joints shall be taped or caulked.

**7.1.3** The test specimen shall have a height not less than 18 ft (5.5 m) above the floor level of the first story of the test facility and shall have a width not less than 14 ft (4.3 m).

**7.1.4** The perimeter of the window opening shall be completely covered with a layer of nominal ⅝ in. (16 mm) thick Type X gypsum wallboard.

**7.1.5** A spandrel beam shall not be used.

**7.1.6** Calibration instrumentation shall consist of not less than the following:

(1) Temperature measurements taken at the locations shown in Figure 7.1.6(a) and Figure 7.1.6(b) using nominal 20-gauge, Type K thermocouples, and those used to measure the temperatures at the locations shown in Figure 7.1.6(c) must be nominal 18-gauge, Type K thermocouples
(2) No fewer than three 0–5 W/cm$^2$ circular foil total heat flux gauges located as shown in Figure 7.1.6(a)
(3) Gas flow rate measurement equipment for each of the burners

**7.1.7** Prior to the conduct of the calibration test, the paper facing of the gypsum wallboard on the exterior face of the calibration wall assembly shall be burned away by igniting both the room burner and the window burner and immediately adjusting the burners to their maximum flow rates as prescribed in Table 4.4.18 for not less than 5 minutes at these gas flow rates.

**7.1.8** The calibration test shall be conducted with the gas burners supplied during the test according to the calibration gas flow rates prescribed in Table 4.4.18.

**7.1.9** Each burner shall be flowing gas at its prescribed gas flow rate within 15 seconds of each prescribed change in the gas flow rate.

**7.1.10** The initial calibration test shall be conducted with the window burner positioned such that the vertical centerline of the burner is flush with the exterior face of the wall assembly.

**7.1.11*** At the conclusion of the test, the data obtained shall be compared to the values specified in Table 8.1.6.

**7.1.12** To prevent burner changes from affecting the data, the average values for each time period shall be determined using data from 15 seconds into the period through 15 seconds short of the end of the period.

**7.1.13** The allowable tolerances for the comparison of determined average values to the specified average values shall be 10 percent for temperatures and as shown in Table 8.1.6 for the heat flux measurements.

**7.1.14** All of the determined average values for the locations shown in Table 8.1.6 shall fall within the tolerances of those specified in Table 8.1.6.

**7.1.15** The values for Thermocouple Nos. 1 and 8 through 14, as shown in Figure 7.1.6(a), shall be reported, but they shall not be used in the calibration determination.

**7.1.16** If the actual test values are not within the allowable tolerances, then the calibration shall be repeated and the gas flows or window burner position adjusted until the determined values are within the allowable tolerances.

**7.1.17** If it is demonstrated that the burners must follow different flow rates in order to attain the prescribed burn room and/or exterior temperatures and heat fluxes, then the flows derived from the calibration test shall be used.

**7.1.18** If it is demonstrated that the window burner must be repositioned within 5 in. (127 mm) of the exterior face of the calibration wall to attain the prescribed exterior temperatures and heat fluxes, then the position derived from the calibration shall be used in all subsequent testing.

**7.2 Frequency of Calibration.** Calibration shall be performed in the following circumstances:

(1) Initially, prior to the first wall assembly test
(2) When significant changes (e.g., flowmeters are new) to the gas flow systems are made
(3) Within one year prior to the test of an actual product wall assembly
(4) Whenever ceramic blanket covering more than 50 percent of the wall or ceiling surface in the burn room is replaced



Copyright National Fire Protection Association
Provided by IHS under license with NFPA
No reproduction or networking permitted without license from IHS
Not for Resale

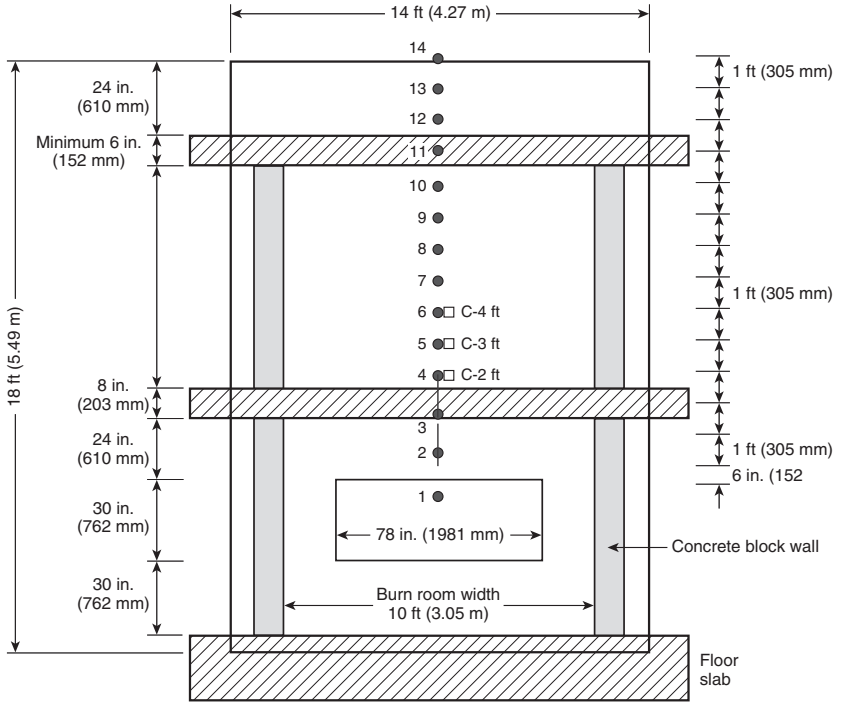


● Thermocouples — 1 in. (25 mm) from exterior wall surface
□ Calorimeters (C) in wall — flush with exterior wall surface

**FIGURE 7.1.6(a) Exterior View of the Wall Assembly. Calibration instrumentation (not to scale).**

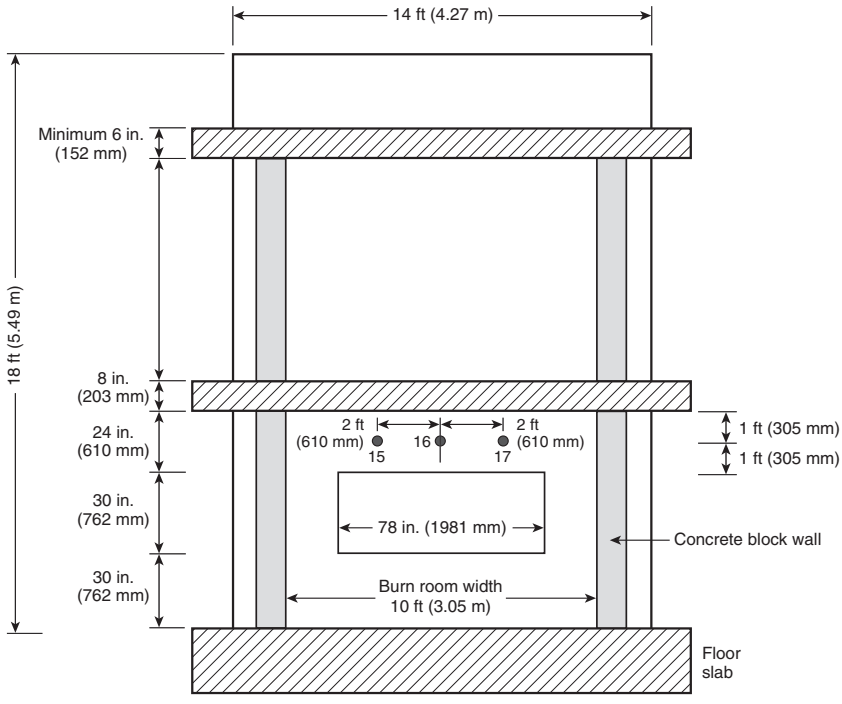


● Thermocouples — 1 in. (25 mm) from interior wall surface

**FIGURE 7.1.6(b) Interior View of the Wall Assembly. Calibration instrumentation (not to scale).**



Copyright National Fire Protection Association
Provided by IHS under license with NFPA
No reproduction or networking permitted without license from IHS
Not for Resale

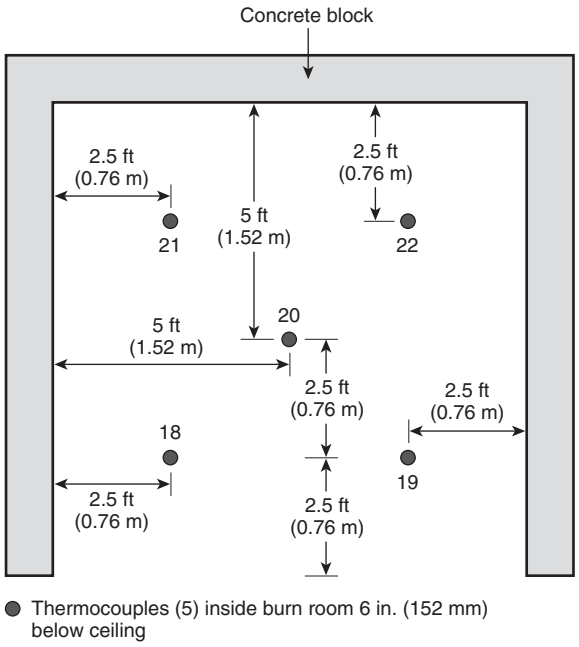


**FIGURE 7.1.6(c) Plan View — First-Story Test Room. Calibration instrumentation (not to scale).**

## Chapter 8 Fire Test Procedure

**8.1 Test Procedure.**

**8.1.1** The test procedure specified in 8.1.2 through 8.1.12 shall be used.

**8.1.2** Instrumentation on the completed test specimen shall be verified for operation.

**8.1.3** The placement of the window burner shall be verified to be in accordance with 4.4.13 through 4.4.16.

**8.1.4** Ambient conditions at the start of the fire test shall be as follows:

(1) The temperature of the air in the test facility shall be between 50°F and 90°F (10°C and 32°C).
(2) The relative humidity of the air in the test facility shall be between 20 percent and 80 percent.
(3) Airflow across the exterior face of the test specimen shall be less than 4.4 ft/sec (1.3 m/sec) as determined by an anemometer placed at a right angle to the exterior face and located within 3 ft (1 m) of the exterior face. The anemometer shall be of the hot wire or vane type and shall have an accuracy of 1 fpm.

**8.1.5** The test room burner shall be ignited.

**8.1.6** The gas flow rates established in accordance with 4.4.18 through 4.4.20 shall be followed for both burners to achieve the temperatures and heat fluxes as shown in Table 8.1.6.

**Table 8.1.6 Calibration Average Values for Time Periods Indicated**

| | 0–5 min | | 5–10 min | | 10–15 min | | 15–20 min | | 20–25 min | | 25–30 min | |
|---|---|---|---|---|---|---|---|---|---|---|---|---|
| **Location** | **°F** | **°C** | **°F** | **°C** | **°F** | **°C** | **°F** | **°C** | **°F** | **°C** | **°F** | **°C** |
| Burn room temperature | 1151 | 622 | 1346 | 730 | 1482 | 806 | 1600 | 871 | 1597 | 869 | 1648 | 898 |
| Interior wall surface of Thermocouple No. 3 | 1065 | 574 | 1298 | 703 | 1433 | 778 | 1578 | 859 | 1576 | 858 | 1655 | 902 |
| 1 ft (305 mm) above window | 602 | 317 | 870 | 466 | 952 | 511 | 992 | 533 | 1046 | 563 | 1078 | 581 |
| 2 ft (610 mm) above window | 679 | 359 | 1015 | 546 | 1121 | 605 | 1183 | 639 | 1245 | 674 | 1296 | 702 |
| 3 ft (914 mm) above window | 646 | 341 | 971 | 521 | 1096 | 591 | 1174 | 634 | 1245 | 674 | 1314 | 712 |
| 4 ft (1219 mm) above window | 577 | 302 | 858 | 459 | 982 | 528 | 1063 | 573 | 1135 | 613 | 1224 | 662 |
| 5 ft (1524 mm) above window | 521 | 272 | 765 | 407 | 875 | 469 | 949 | 509 | 1007 | 542 | 1106 | 597 |
| 6 ft (1829 mm) above window | 472 | 244 | 690 | 366 | 787 | 419 | 856 | 458 | 913 | 489 | 1010 | 543 |

| | $W/cm^2$ | | | | | |
|---|---|---|---|---|---|---|
| | **0–5 min** | **5–10 min** | **10–15 min** | **15–20 min** | **20–25 min** | **25–30 min** |
| Calorimeter 2 ft (610 mm) above window | 0.9 ± 0.2 | 1.9 ± 0.4 | 2.5 ± 0.5 | 2.9 ± 0.6 | 3.4 ± 0.7 | 3.8 ± 0.8 |
| Calorimeter 3 ft (914 mm) above window | 1.0 ± 0.2 | 2.0 ± 0.4 | 2.6 ± 0.5 | 3.2 ± 0.6 | 3.7 ± 0.7 | 4.0 ± 0.8 |
| Calorimeter 4 ft (1219 mm) above window | 0.8 ± 0.2 | 1.5 ± 0.3 | 2.0 ± 0.4 | 2.5 ± 0.5 | 3.0 ± 0.6 | 3.4 ± 0.7 |



Copyright National Fire Protection Association
Provided by IHS under license with NFPA
No reproduction or networking permitted without license from IHS
Not for Resale

**8.1.7** At 5 minutes ± 5 seconds after ignition of the test room burner, the window burner shall be ignited.

**8.1.8** At 30 minutes ± 5 seconds after ignition of the test room burner, the gas supply to both burners shall be shut off.

**8.1.9** Any residual burning on the test specimen shall not be extinguished until not less than 10 minutes has elapsed after the gas flow was shut off, unless the test laboratory determines that extinguishment is required to maintain safe conditions in the test facility.

**8.1.10** The access opening for the second-story test room shall remain open during the fire tests.

**8.1.11** Any additional access openings in the second-story test room shall be closed during the fire test.

**8.1.12** The window opening shall be the only opening permitted to be open in the first-story test room during the fire test.

## Chapter 9 Data Collection and Observation

**9.1 Duration.**

**9.1.1** Video recording and data collection shall be started not less than 1 minute prior to ignition of the test room burner.

**9.1.2** Data collection shall be continued until residual burning has stopped or not less than 10 minutes has elapsed after the gas flow was shut off.

**9.2 Data Recording.** Measurements of the temperatures and gas flows specified in Chapter 4 shall be recorded at intervals not to exceed 15 seconds.

**9.3 Visual Observations.**

**9.3.1** Visual observation of the performance of the test specimen during the test period shall be recorded and documented in accordance with the following:

(1) Color photographs or digital images of the exterior face, taken during construction of the test specimen, during the fire test at the rate of not less than once every minute, at the end of the fire test, and after the fire test to include dissection of the test specimen
(2) Color videotape of the exterior face of the test specimen taken prior to, during, and after the fire test, showing the laboratory test report identification number and the test date
(3)*Color videotape taken of the test specimen/floor intersection in the second-story test room during the fire test
(4) The interior and exterior faces of the test specimen shall be photographed and visual observations recorded.

**9.3.2** The color videos shall include a clock or a timer depicting real time.

**9.3.3** The timer in 9.3.2 shall be integral to the video camera unless a clock or timer that is clearly viewed throughout the fire test is used.

**9.4 Determination of Height and Depth of Damage.** The test specimen shall be dismantled and dissected to determine the height and depth of damage within the combustible components and the condition of the test specimen facings.

## Chapter 10 Conditions of Acceptance

**10.1 Test Specimen.** The performance of the test specimen shall be determined on the basis of visual observations both during and after the test in conjunction with the temperature data obtained during the fire test.

**10.2 Performance Criteria.** Exterior non-load-bearing wall assemblies and panels used as components of curtain wall assemblies shall be considered as passing the fire test when the performance criteria specified in 10.2.1 through 10.2.5 are met during the conduct of the fire test.

**10.2.1 Flame Propagation, Exterior Face of Wall Assembly.**

**10.2.1.1** Flame propagation on the exterior face of the wall assembly shall not occur either vertically or horizontally beyond the area of flame plume impingement by the window burner flames.

**10.2.1.2** Flame propagation shall be determined to occur if any one of the following conditions is recorded or observed:

(1) A temperature of 1000°F (538°C) is recorded at any one of Thermocouple Nos. 11 and 14 through 17. *[See Figure 6.1(a).]*
(2) Flames emitting from the surface of the exterior face of the wall assembly reach a height of 10 ft (3.05 m) or greater above the top of the window opening, as shown in Figure 10.2.1.2.
(3) Flames emitting from the surface of the exterior face of the wall assembly reach a horizontal distance of 5 ft (1.52 m) or greater from the vertical centerline of the window opening. *(See Figure 10.2.1.2.)*

**10.2.2 Flame Propagation, Core Components.** Flame propagation shall not occur either vertically or horizontally through the core components of the test specimen as determined in accordance with the following:

(1) For wall assemblies constructed of exterior wall panels greater than ¼ in. (6.4 mm) thick containing combustible components *[see Figure 6.1(a) and Figure 6.1(b), Details A and B]*, temperatures in the combustible components shall not exceed 750°F (417°C) above their temperature as measured immediately after the start of the test by Thermocouple Nos. 28 and 31 through 40.
(2) For wall assemblies constructed of exterior wall panels that are ¼ in. (6.4 mm) thick or less containing combustible components and having a wall cavity with an air space *[see Figure 6.1(a) and Figure 6.1(b), Detail C]*, the following conditions shall be met:
    (a) Temperatures in the air cavity shall not exceed 1000°F (538°C) as measured by Thermocouple Nos. 28 and 31 through 40.
    (b) Temperatures in the wall cavity insulation shall not exceed 750°F (417°C) above their temperature as measured immediately after the start of the fire test by Thermocouple Nos. 55 through 65.
(3) For wall assemblies constructed of exterior wall panels that are ¼ in. (6.4 mm) thick or less containing combustible components and having a wall cavity without an air space *[see Figure 6.1(a) and Figure 6.1(b), Detail D]*, temperatures in the wall cavity insulation shall not exceed 750°F (417°C) above their temperature as measured immediately after the start of the fire test by Thermocouple Nos. 28 and 31 through 40.



Copyright National Fire Protection Association
Provided by IHS under license with NFPA
No reproduction or networking permitted without license from IHS
Not for Resale

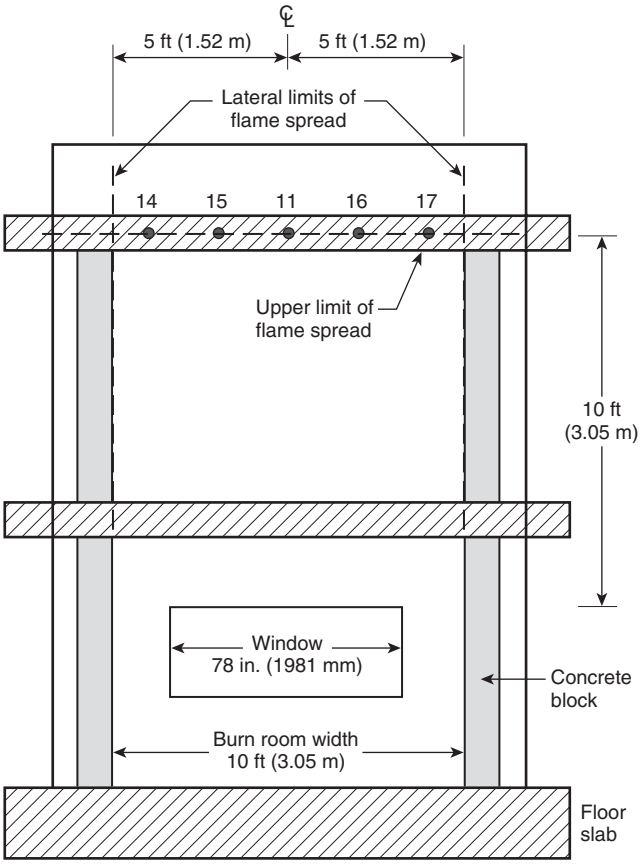


**FIGURE 10.2.1.2 Limits of Flame Propagation (not to scale).**

**10.2.3 Flame Propagation, Beyond First-Story Test Room.**

**10.2.3.1** Flame propagation shall not occur horizontally beyond the limits of the first-story test room.

**10.2.3.2** Flame propagation shall be determined to occur if any one of the following conditions is recorded or observed:

(1) Flames occur over the surface of the exterior face of the wall assembly beyond the side walls of the test apparatus.
(2) Flames occur beyond the intersection of the wall assembly and the side walls of the test apparatus.
(3) Flame propagation occurs horizontally through the core components in the wall assembly covering the first-story test room as determined by the following:
   (a) For wall assemblies constructed of exterior wall panels greater than ¼ in. (6.4 mm) thick containing combustible components *[see Figure 6.1(a) and Figure 6.1(b), Details A and B]*, temperatures in the combustible components shall not exceed 750°F (417°C) above their temperature measured immediately after the start of the fire test by Thermocouple Nos. 18 and 19.
   (b) For wall assemblies constructed of exterior wall panels that are ¼ in. (6.4 mm) thick or less containing combustible components and having a wall cavity with an air space *[see Figure 6.1(a) and Figure 6.1(b), Detail C]*, the following conditions shall be met:
      i. Temperatures in the air cavity shall not exceed 1000°F (538°C) as measured by Thermocouple Nos. 18 and 19.
      ii. Temperatures in the wall cavity insulation shall not exceed 750°F (417°C) above their temperature as measured immediately after the start of the fire test by Thermocouple Nos. 66 and 67.
   (c) For wall assemblies constructed of exterior wall panels that are ¼ in. (6.4 mm) thick or less containing combustible components and having a wall cavity without an air space *[see Figure 6.1(a) and Figure 6.1(b), Detail D]*, temperatures in the wall cavity insulation shall not exceed 750°F (417°C) above their temperature as measured immediately after the start of the test by Thermocouple Nos. 18 and 19.

**10.2.4 Temperatures in Second-Story Test Room.** Temperatures measured 1 in. (25 mm) from the interior surface of the wall assembly within the second-story test room shall not exceed 500°F (278°C) above the ambient air temperature of the test facility at the start of the fire test as measured by Thermocouple Nos. 49 through 54. *[See Figure 6.1(c).]*

**10.2.5 Flames in Second-Story Test Room.** Flames shall not occur in the second-story test room.

## Chapter 11 Report

**11.1 Fire Test Report.** A fire test report shall be prepared to document the fire test and shall contain not less than the following:

(1) *Description of the wall assembly, including the following:
   (a) Drawings showing the structural design in plan and elevation, principal cross-section and other sections as needed for clarity, and joint locations and details
   (b) Details of the attachment of the wall assembly to the test apparatus
(2) Location of thermocouples
(3) Ambient conditions at the start of the fire test
(4) Temperatures
(5) Burner gas flow data obtained during the fire test, including type of gas used and total gas flow of both burners for the duration of fire test
(6) Comparison of burner gas flow data obtained during the fire test to the burner gas flow data obtained during the latest calibration test
(7) Position of the vertical centerline of the window burner with respect to the exterior face of the wall assembly for the fire test and the latest calibration test
(8) Visual observations made during the fire test
(9) Photographs of the following:
   (a) Wall assembly — prior to fire test, exterior face
   (b) Wall assembly — fire test in progress, exterior face
   (c) Wall assembly — post-fire test, exterior face
   (d) Wall assembly — post-fire test, interior face, both stories
   (e) Wall cavity insulation in wall assembly — post-fire test
(10) Damage sketch(es) of the wall assembly
(11) Extent of residual burning that continues after the gas flow to the gas burners has been shut off
(12) Visual observations of smoke accumulation inside the second-story test room
(13) Performance of the wall assembly with respect to each of the appropriate conditions of acceptance *(See Chapter 10)*



Copyright National Fire Protection Association
Provided by IHS under license with NFPA
No reproduction or networking permitted without license from IHS
Not for Resale

## Annex A Explanatory Material

*Annex A is not a part of the requirements of this NFPA document but is included for informational purposes only. This annex contains explanatory material, numbered to correspond with the applicable text paragraphs.*

**A.1.1** In the late 1970s, the use of foam plastic insulation and other combustible materials in exterior, non-load-bearing walls on noncombustible construction (typically Types I, II, III, and IV) was proposed. At that time, questions were raised concerning the vertical and horizontal spread of fire over the combustible faces or through the combustible cores of these types of exterior walls. In order to address these concerns, a full-scale fire test program was sponsored by the Society of Plastics Industry (SPI). The testing was conducted in 1980 at Southwest Research Institute. This program consisted of a series of full-scale fire tests that utilized an outdoor 26 ft tall two-story building. The test wall systems were erected on two adjoining sides of the building and in one wall; a window opening was placed in the lower floor wall area. A 1285 lb wood crib was placed in the lower floor, and when ignited this fire source produced an NFPA 251 time/temperature fire exposure on the interior of the wall system. At approximately 5 minutes into the test, flames exited the window opening and simultaneously exposed the exterior face of the wall assembly. Temperature measurements and visual observations were made during the 30-minute test and after the test to evaluate the extent of flame propagation. The test series showed that for wall panel systems evaluated, the extent of flame propagation both vertically and horizontally was limited (Beitel and Evans).

When the Uniform Building Code (UBC) was modified to recognize this application, the full-scale fire test was also codified and was published in the 1988 edition of the UBC as Test Standard 17-6. In the 1994 edition of the UBC, the Code was reorganized and the test became UBC Test Standard 26-4.

In the early 1990s, SPI sponsored a test program that developed a reduced-scale version of the UBC 26-4 test. This test used an indoor, intermediate-scale, multi-story test apparatus, a single wall with a window opening, and two gas-fired burners to produce the same exposure conditions as the UBC 26-4. A combination of temperature measurements and visual observations were used to determine the extent of vertical and horizontal flame propagation over the face of the wall systems or through the combustible core material. After development of the test apparatus, a series of tests were conducted that showed correlation between the new intermediate-scale test and the full-scale UBC 26-4. Testing was done with wall systems that both passed and failed in the UBC 26-4, with similar results being attained in the intermediate-scale test method (Beitel and Griffith).

This test was recognized by the UBC as an alternate to the UBC 26-4 and was published as UBC Test Standard 26-9 in the 1997 edition of the UBC.

In 1998, NFPA adopted NFPA 285, which used as its basis the UBC 26-9 test. NFPA 285 is technically the same as the UBC 26-9, with the only differences between the test methods being formatting and editorial issues.

**A.1.1.1** The fire test method described is intended to evaluate the inclusion of combustible components within wall assemblies/panels of buildings that are required to have exterior walls of noncombustible construction.

The test apparatus described in this standard is commonly referred to as the intermediate-scale multi-story test apparatus (ISMA).

**A.1.1.2** NFPA 285 addresses fire exposures from interior fires that reach flashover, break exterior windows, and expose the building facade. It is not intended to address fire exposures that originate from the building's exterior.

**A.3.2.1 Approved.** The National Fire Protection Association does not approve, inspect, or certify any installations, procedures, equipment, or materials; nor does it approve or evaluate testing laboratories. In determining the acceptability of installations, procedures, equipment, or materials, the authority having jurisdiction may base acceptance on compliance with NFPA or other appropriate standards. In the absence of such standards, said authority may require evidence of proper installation, procedure, or use. The authority having jurisdiction may also refer to the listings or labeling practices of an organization that is concerned with product evaluations and is thus in a position to determine compliance with appropriate standards for the current production of listed items.

**A.3.2.2 Authority Having Jurisdiction (AHJ).** The phrase "authority having jurisdiction," or its acronym AHJ, is used in NFPA documents in a broad manner, since jurisdictions and approval agencies vary, as do their responsibilities. Where public safety is primary, the authority having jurisdiction may be a federal, state, local, or other regional department or individual such as a fire chief; fire marshal; chief of a fire prevention bureau, labor department, or health department; building official; electrical inspector; or others having statutory authority. For insurance purposes, an insurance inspection department, rating bureau, or other insurance company representative may be the authority having jurisdiction. In many circumstances, the property owner or his or her designated agent assumes the role of the authority having jurisdiction; at government installations, the commanding officer or departmental official may be the authority having jurisdiction.

**A.4.2.3** Figure A.4.2.3(a) through Figure A.4.2.3(c) show additional diagrams of the test structure.

**A.4.4.8** In relation to Figure 4.4.8, Figure A.4.4.8 illustrates a side view of burner placement. The window burner is similar to the burner used in Section 9.3 of NFPA 256, *Standard Methods of Fire Tests of Roof Coverings.*

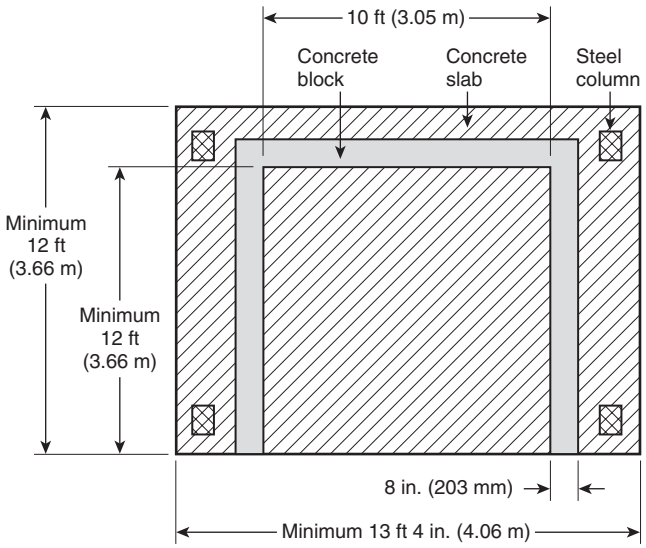


**FIGURE A.4.2.3(a) Front View of Test Apparatus (not to scale).**



Copyright National Fire Protection Association
Provided by IHS under license with NFPA
No reproduction or networking permitted without license from IHS
Not for Resale

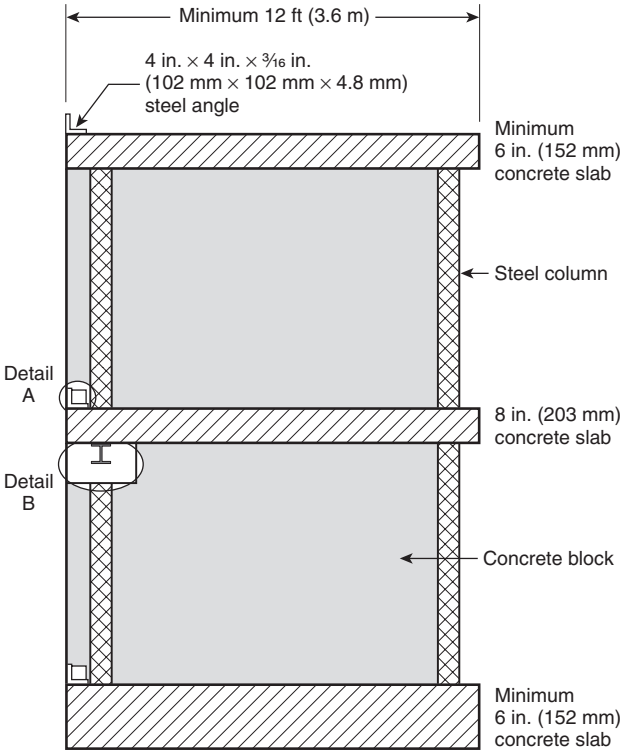


**FIGURE A.4.2.3(b) Plan View of Test Apparatus — Both Floors (not to scale).**

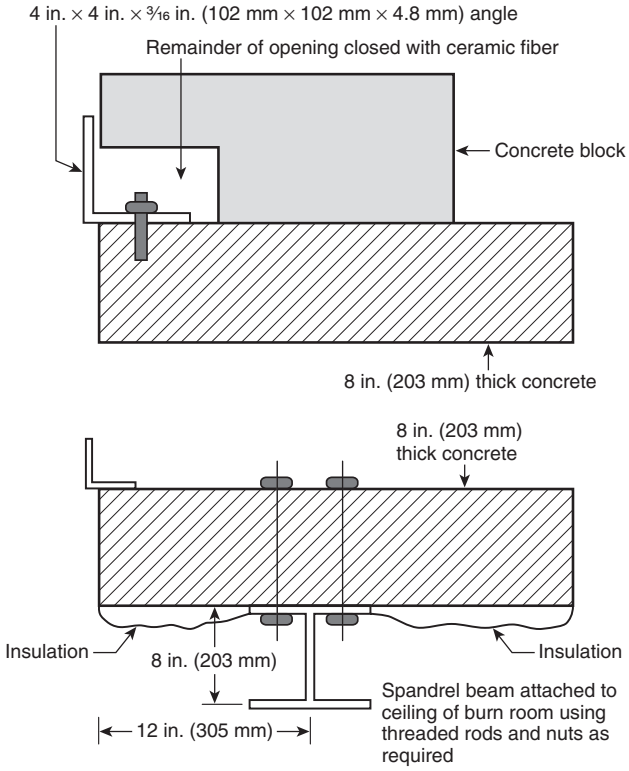


**FIGURE A.4.2.3(c) Side View of Burner Placement in First-Story Test Room (not to scale).**

**A.4.4.18** The calibration flow rates shown in Table 4.4.18 are designed to achieve the temperatures shown in Table 8.1.6.

**A.5.6.2.1** Figure A.4.2.3(b) and Figure A.4.2.3(c) provide an illustration of the spandrel beam.

**A.5.7.2** The construction of the wall assembly should be typical of actual product use.

**A.5.7.3** Joints and seams should be caulked, backed, or otherwise installed as appropriate to replicate typical field installations.

**A.7.1.1** Figure A.7.1.1 illustrates a typical calibration wall assembly.

**A.7.1.11** For example, if the average for the 5-minute to 10-minute time interval is being processed, use the data from the actual test times of 5:15 through 9:45 for the average. This procedure will allow for data to be evaluated during steady burning conditions.

**A.9.3.1(3)** This video camera is used to assist in the determination of flame penetration and smoke accumulation in the second-story test room.

**A.11.1(1)** Additional information concerning the wall assembly components might be required by the authority having jurisdiction. These items can include the following:

(1) Flame spread index and smoke developed index values per NFPA 255, *Standard Method of Test of Surface Burning Characteristics of Building Materials*, as required
(2) Self-ignition temperature of plastic materials per ASTM D 1929, *Test Method for Ignition Properties of Plastics*
(3) Potential heat value of combustible materials per NFPA 259, *Standard Test Method for Potential Heat of Building Materials*, converted to Btu/ft$^2$ (MJ/m$^2$) for the combustible components in the assembly tested

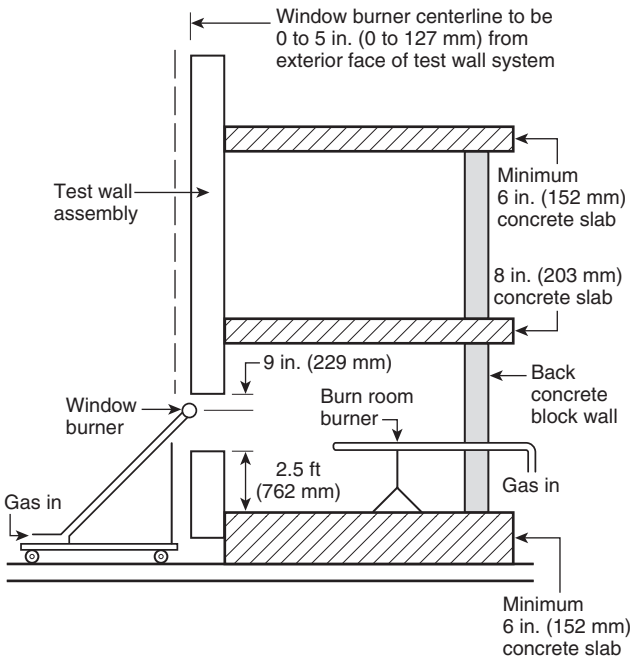


**FIGURE A.4.4.8 Side View of Burner Placement in First-Story Test Room (not to scale).**



Copyright National Fire Protection Association
Provided by IHS under license with NFPA
No reproduction or networking permitted without license from IHS
Not for Resale

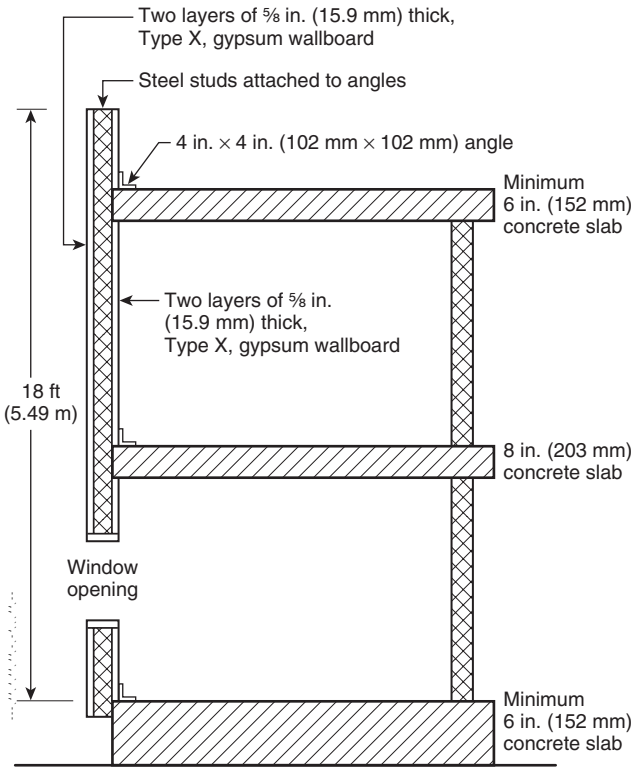


**FIGURE A.7.1.1 Side View of Calibration Wall Assembly (not to scale).**

## Annex B Informational References

**B.1 Referenced Publications.** The documents or portions thereof listed in this annex are referenced within the informational sections of this standard and are not part of the requirements of this document unless also listed in Chapter 2 for other reasons.

**B.1.1 NFPA Publications.** National Fire Protection Association, 1 Batterymarch Park, Quincy, MA 02169-7471.

NFPA 255, *Standard Method of Test of Surface Burning Characteristics of Building Materials*, 2006 edition.

NFPA 256, *Standard Methods of Fire Tests of Roof Coverings*, 2003 edition.

NFPA 259, *Standard Test Method for Potential Heat of Building Materials*, 2003 edition.

**B.1.2 Other Publications.**

**B.1.2.1 ASTM Publication.** American Society for Testing and Materials, 100 Barr Harbor Drive, West Conshohocken, PA 19428-2959.

ASTM D 1929, *Test Method for Ignition Properties of Plastics*, 1996 (2001) edition.

**B.1.2.2 ICC Publication.** International Code Council, 5203 Leesburg Pike, Suite 600, Falls Church, VA 22041.

*Uniform Building Code*, 1997.

**B.1.2.3 Other Publications.**

Beitel, J. J., and Evans, W. R., "Multi-story Fire Evaluation Program, Final Report," SWRI Project 01-6112, prepared for Society of the Plastics Industry, Southwest Research Institute, San Antonio, TX, November 1980.

Beitel, J. J., and Griffith, J. R., Jr., "Development of an Intermediate-Scale Fire Test for the Evaluation of Flammability Characteristics of Exterior, Non-Loadbearing Wall Panel Assemblies Using Foam Plastic Insulation, Phase," Phase II, Revised Final Report, 1 Society of the Plastics Industry, In., New York, NY, May 1994.

**B.2 Informational References. (Reserved)**

**B.3 References for Extracts in Informational Sections. (Reserved)**



Copyright National Fire Protection Association
Provided by IHS under license with NFPA
No reproduction or networking permitted without license from IHS
Not for Resale

# Index

© 2005 National Fire Protection Association. All Rights Reserved.

The copyright in this index is separate and distinct from the copyright in the document that it indexes. The licensing provisions set forth for the document are not applicable to this index. This index may not be reproduced in whole or in part by any means without the express written permission of NFPA.

**-A-**

**Acceptance, conditions of** ..... Chap. 10, 11.1(13)
Performance criteria ..... 10.2
Visual observations ..... 10.1
**Access openings, test apparatus** ..... 4.2.10 to 4.2.13, 8.1.10, 8.1.11
**Ambient conditions** ..... 8.1.4, 11.1(3)
**Application of standard** ..... 1.3
**Approved (definition)** ..... 3.2.1, A.3.2.1
**Authority having jurisdiction (definition)** ..... 3.2.2, A.3.2.2

**-B-**

**Burners** ..... *see* Gas burners

**-C-**

**Calibration procedure** ..... Chap. 7
Average values for time period ..... 7.1.12 to 7.1.14
Frequency of calibration ..... 7.2
Test procedure .... 4.4.18 to 4.4.20, 7.1, A.4.4.18, A.7.1.1, A.7.1.11
**Ceiling** ..... 4.2.8; *see also* Slabs, floor
**Cementitious coatings/materials, curing of** ..... 5.8.1
**Combustible material** ..... 1.1.1, A.1.1
Definition ..... 3.3.1

**-D-**

**Damage sketches** ..... 11.1(10)
**Data collection and observation** ..... 8.3.1(4), Chap. 9
**Definitions** ..... Chap. 3

**-F-**

**Flame propagation** ..... 1.3.1(1) to (4), 10.2.1 to 10.2.3, 10.2.5
Core components ..... 10.2.2
Exterior face of wall assembly ..... 10.2.1
First-story test room ..... 10.2.3
Second-story test room ..... 10.2.5
**Floor** ..... *see* Slabs, floor
**Flow rate** ..... *see* Gas flow
**Foam plastic insulation** ..... A.1.1

**-G-**

**Gas burners** ..... 4.4, A.4.4.8, A.4.4.18; *see also* Gas flow; Window burner
Ignition ..... 8.1.5, 8.1.7
Shut off ..... 8.1.8, 8.1.9
**Gas flow** ..... 8.1.6
Calibration ..... *see* Calibration procedure
Data recording ..... 9.2
Meters for measurement of ..... 6.2
Report of ..... 11.1(5), 11.1(6)
Shut off ..... 9.1.2, 11.1(11)

**-H-**

**Heat flux gauges** ..... 7.1.6(2)
**Horizontal flame propagation** ..... 1.3.1(4), 10.2.1.1, 10.2.2, 10.2.3.1

**-I-**

**Instrumentation** ..... Chap. 6, 8.1.2
**Insulation**
Foam plastic ..... A.1.1
Test apparatus ..... 4.2.9

**-L-**

**Labeled (definition)** ..... 3.2.3

**-M-**

**Movable test frame** ..... 4.2.14, 4.3, 5.1, Figs. 5.2(b) and (c)

**-N-**

**Noncombustible material** ..... 1.1.1, A.1.1
Definition ..... 3.3.2

**-P-**

**Performance criteria** ..... 10.2
**Photographs** ..... 9.3.1(1), 11.1(9)
**Purpose of standard** ..... 1.2

**-R-**

**References** ..... Chap. 2, Annex B
**Report** ..... Chap. 11

**-S-**

**Scope of standard** ..... 1.1, A.1.1
**Shall (definition)** ..... 3.2.4
**Should (definition)** ..... 3.2.5
**Slabs, floor**
Mounting of test specimen ..... 5.6.2, A.5.6.2.1
Positioning of test specimen ..... 5.4.1
Sealing gaps at ..... 1.3.2
Test apparatus ..... 4.2.4 to 4.2.6, 4.2.8(3), A.4.2.3
**Spandrel beam** ..... 5.6.2, 7.1.5, A.5.6.2.1
**Standard (definition)** ..... 3.2.6

**-T-**

**Temperature measurements** ..... 1.3.3; *see also* Thermocouples
Data recording ..... 9.2
Locations for ..... 6.1, 7.1.6(1)
Performance criteria ..... 10.2.1.2, 10.2.2, 10.2.3.2, 10.2.4
Report of ..... 11.1(4)
**Test apparatus** ..... 4.2, A.4.2.3; *see also* Test specimen
**Test facility** ..... 4.1
**Test procedure** ..... Chap. 8
**Test report** ..... 11.1, A.11.1(1)
**Test specimen** ..... Chap. 5
Acceptance, conditions of ..... *see* Acceptance, conditions of
For calibration test ..... 7.1.1 to 7.1.5, A.7.1.1
Construction details ..... 5.7, A.5.7.2, A.5.7.3
Curing period ..... 5.8
Definition ..... 3.3.3
Height and depth of damage, determining ..... 9.4
Location ..... 5.1
Mounting ..... 5.2
Position ..... 5.4
Securing to test apparatus, method of ..... 5.6, A.5.6.2.1
Size ..... 5.3
Test report description ..... 11.1(1), A.11.1(1)
Visual observations of ..... A.9.3.1(3) *see* Visual observations
Window opening ..... *see* Window opening



Copyright National Fire Protection Association
Provided by IHS under license with NFPA
No reproduction or networking permitted without license from IHS
Not for Resale

**Thermocouples** … 6.3, 7.1.15, 10.2.1.2, 10.2.2, 10.2.3.2, 10.2.4, 11.1(2)
**Total heat flux gauges** ..... 7.1.6(2)

**-V-**

**Vertical flame propagation** ..... 1.3.1(2), 1.3.1(3), 10.2.1.1, 10.2.2
**Video recording** ..... 9.1.1, 9.3, A.9.3.1(3)
**Visual observations** ..... 1.3.3, 8.1(4), 9.1.1, 9.3, 10.1, 11.1(8), 11.1(12), A.9.3.1(3)

**-W-**

**Walls, test apparatus** ..... 4.2.7 to 4.2.14; *see also* Test specimen; Window opening
**Window burner** ..... 4.4.2, 4.4.9 to 4.4.17, 7.1.7 to 7.1.10, 7.1.16 to 7.1.18, 8.1.3, 8.1.7, 8.1.8
Position, report of ..... 11.1(7)
**Window opening** ..... 4.4.2, 5.4.2, 5.5, 7.1.4, 8.1.12



Copyright National Fire Protection Association
Provided by IHS under license with NFPA
No reproduction or networking permitted without license from IHS
Not for Resale

## *Sequence of Events Leading to Publication of an NFPA Committee Document*

Call goes out for proposals to amend existing document or for recommendations on new document.

▼

Committee meets to act on proposals, to develop its own proposals, and to prepare its report.

▼

Committee votes on proposals by letter ballot. If two-thirds approve, report goes forward. Lacking two-thirds approval, report returns to committee.

▼

Report — *Report on Proposals* (ROP) — is published for public review and comment.

▼

Committee meets to act on each public comment received.

▼

Committee votes on comments by letter ballot. If two-thirds approve, supplementary report goes forward. Lacking two-thirds approval, supplementary report returns to committee.

▼

Supplementary report — *Report on Comments* (ROC) — is published for public review.

▼

NFPA membership meets (Annual or Fall Meeting) and acts on committee report (ROP or ROC).

▼

Committee votes on any amendments to report approved at NFPA Annual or Fall Meeting.

▼

Appeals to Standards Council on Association action must be filed within 20 days of the NFPA Annual or Fall Meeting.

▼

Standards Council decides, based on all evidence, whether or not to issue standard or to take other action, including upholding any appeals.

## *Committee Membership Classifications*

The following classifications apply to Technical Committee members and represent their principal interest in the activity of the committee.

M *Manufacturer:* A representative of a maker or marketer of a product, assembly, or system, or portion thereof, that is affected by the standard.

U *User:* A representative of an entity that is subject to the provisions of the standard or that voluntarily uses the standard.

I/M *Installer/Maintainer:* A representative of an entity that is in the business of installing or maintaining a product, assembly, or system affected by the standard.

L *Labor:* A labor representative or employee concerned with safety in the workplace.

R/T *Applied Research/Testing Laboratory:* A representative of an independent testing laboratory or independent applied research organization that promulgates and/or enforces standards.

E *Enforcing Authority:* A representative of an agency or an organization that promulgates and/or enforces standards.

I *Insurance:* A representative of an insurance company, broker, agent, bureau, or inspection agency.

C *Consumer:* A person who is, or represents, the ultimate purchaser of a product, system, or service affected by the standard, but who is not included in the *User* classification.

SE *Special Expert:* A person not representing any of the previous classifications, but who has a special expertise in the scope of the standard or portion thereof.

NOTES:

1. "Standard" connotes code, standard, recommended practice, or guide.
2. A representative includes an employee.
3. While these classifications will be used by the Standards Council to achieve a balance for Technical Committees, the Standards Council may determine that new classifications of members or unique interests need representation in order to foster the best possible committee deliberations on any project. In this connection, the Standards Council may make such appointments as it seems appropriate in the public interest, such as the classification of "Utilities" in the National Electrical Code Committee.
4. Representatives of subsidiaries of any group are generally considered to have the same classification as the parent organization.

Copyright National Fire Protection Association
Provided by IHS under license with NFPA
No reproduction or networking permitted without license from IHS
Not for Resale

# NFPA Technical Committee Document Proposal Form

**Note: All proposals must be received by 5:00 p.m. EST/EDST on the published proposal closing date.**

**For further information on the standards-making process, please contact Codes and Standards Administration at 617-984-7249. For technical assistance, please call NFPA at 617-770-3000.**

FOR OFFICE USE ONLY
Log #: _____
Date Rec'd: _____

**Please indicate in which format you wish to receive your ROP/ROC:** ☐ **CD ROM** ☐ **paper** ☐ **download**
**(Note: In choosing the download option you intend to view the ROP/ROC from our Website. No copy will be sent to you.)**

**Date** 12/18/02 **Name** John B. Smith **Telephone** 617-555-1212
**Company** _____
**Address** 9 Seattle St. **City** Seattle **State** WA **Zip** 02255
**Please indicate organization represented (if any)** Fire Marshals Assn. of North America

1. **a) NFPA Document Title** National Fire Alarm Code
   **b) NFPA No. & Edition** NFPA 72, 2002 ed. **c) Section/Paragraph** 4.4.7.1.1

2. **Proposal Recommends:** *(check one)* ☐ **new text** ☐ **revised text** ☒ **deleted text**

3. **Proposal.** *(Include proposed new or revised wording, or identification of wording to be deleted.)* Note: Proposed text should be in legislative format, that is, use underscore to denote wording to be inserted (inserted wording) and strike-through to denote wording to be deleted (~~deleted wording~~). Delete exception.

4. **Statement of Problem and Substantiation for Proposal.** Note: State the problem that will be resolved by your recommendation. Give the specific reason for your proposal including copies of tests, research papers, fire experience, etc. If more than 200 words, it may be abstracted for publication. A properly installed and maintained system should be free of ground faults. The occurrence of one or more ground faults should be required to cause a "trouble" signal because it indicates a condition that could contribute to future malfunction of the system. Ground fault protection has been widely available on these systems for years and its cost is negligible. Requiring it on all systems will promote better installations, maintenance and reliability.

5. ☒ **This Proposal is Original Material.** Note: Original material is considered to be the submitter's own idea based on or as a result of his/her own experience, thought, or research and, to the best of his/her knowledge, is not copied from another source.

   ☐ **This Proposal is Not Original Material; Its Source** ***(if known)*** **is as Follows:** _____

Sample

*I hereby grant the NFPA all and full rights in copyright to this proposal, and I understand that I acquire no rights in any publication of NFPA in which this proposal in this or another similar or analogous form is used.*

**Signature** ***(Required)*** John B. Smith

**PLEASE USE SEPARATE FORM FOR EACH PROPOSAL • NFPA FAX (617) 770-3500**

**Mail to: Secretary, Standards Council • NFPA • 1 Batterymarch Park • PO Box 9101 • Quincy, MA 02269-9101**

--`,,```,-`-`,,`,,`,`,,`---

Copyright National Fire Protection Association
Provided by IHS under license with NFPA
No reproduction or networking permitted without license from IHS

Not for Resale

# NFPA Technical Committee Document Proposal Form

**Note: All proposals must be received by 5:00 p.m. EST/EDST on the published proposal closing date.**

**For further information on the standards-making process, please contact Codes and Standards Administration at 617-984-7249. For technical assistance, please call NFPA at 617-770-3000.**

FOR OFFICE USE ONLY
Log #: _____
Date Rec'd: _____

**Please indicate in which format you wish to receive your ROP/ROC:** ☐ **CD ROM** ☐ **paper** ☐ **download**
**(Note: In choosing the download option you intend to view the ROP/ROC from our Website. No copy will be sent to you.)**

**Date** _____ **Name** _____ **Telephone** _____
**Company** _____
**Address** _____ **City** _____ **State** _____ **Zip** _____
**Please indicate organization represented (if any)** _____

1. **a) NFPA Document Title** _____
   **b) NFPA No. & Edition** _____ **c) Section/Paragraph** _____

2. **Proposal Recommends:** *(check one)* ☐ **new text** ☐ **revised text** ☐ **deleted text**

3. **Proposal.** *(Include proposed new or revised wording, or identification of wording to be deleted.)* Note: Proposed text should be in legislative format, that is, use underscore to denote wording to be inserted (inserted wording) and strike-through to denote wording to be deleted (~~deleted wording~~). _____

4. **Statement of Problem and Substantiation for Proposal.** Note: State the problem that will be resolved by your recommendation. Give the specific reason for your proposal including copies of tests, research papers, fire experience, etc. If more than 200 words, it may be abstracted for publication. _____

5. ☐ **This Proposal is Original Material.** Note: Original material is considered to be the submitter's own idea based on or as a result of his/her own experience, thought, or research and, to the best of his/her knowledge, is not copied from another source.

   ☐ **This Proposal is Not Original Material; Its Source *(if known)* is as Follows:** _____

*I hereby grant the NFPA all and full rights in copyright to this proposal, and I understand that I acquire no rights in any publication of NFPA in which this proposal in this or another similar or analogous form is used.*

**Signature *(Required)*** _____

**PLEASE USE SEPARATE FORM FOR EACH PROPOSAL • NFPA FAX (617) 770-3500**

**Mail to: Secretary, Standards Council • NFPA • 1 Batterymarch Park • PO Box 9101 • Quincy, MA 02269-9101**

--`,,```,,-`-`,,`,,`,`,,`---

Copyright National Fire Protection Association
Provided by IHS under license with NFPA
No reproduction or networking permitted without license from IHS

Not for Resale