NFPA® 275

Standard Method of Fire Tests for the Evaluation of Thermal Barriers Used over Foam Plastic Insulation

2009 Edition

NFPA, 1 Batterymarch Park, Quincy, MA 02169-7471
An International Codes and Standards Organization

Copyright National Fire Protection Association
Provided by IHS under license with NFPA
No reproduction or networking permitted without license from IHS
Not for Resale

IMPORTANT NOTICES AND DISCLAIMERS CONCERNING NFPA DOCUMENTS

NOTICE AND DISCLAIMER OF LIABILITY CONCERNING THE USE OF NFPA DOCUMENTS

NFPA codes, standards, recommended practices, and guides, of which the document contained herein is one, are developed through a consensus standards development process approved by the American National Standards Institute. This process brings together volunteers representing varied viewpoints and interests to achieve consensus on fire and other safety issues. While the NFPA administers the process and establishes rules to promote fairness in the development of consensus, it does not independently test, evaluate, or verify the accuracy of any information or the soundness of any judgments contained in its codes and standards.

The NFPA disclaims liability for any personal injury, property or other damages of any nature whatsoever, whether special, indirect, consequential or compensatory, directly or indirectly resulting from the publication, use of, or reliance on this document. The NFPA also makes no guaranty or warranty as to the accuracy or completeness of any information published herein.

In issuing and making this document available, the NFPA is not undertaking to render professional or other services for or on behalf of any person or entity. Nor is the NFPA undertaking to perform any duty owed by any person or entity to someone else. Anyone using this document should rely on his or her own independent judgment or, as appropriate, seek the advice of a competent professional in determining the exercise of reasonable care in any given circumstances.

The NFPA has no power, nor does it undertake, to police or enforce compliance with the contents of this document. Nor does the NFPA list, certify, test or inspect products, designs, or installations for compliance with this document. Any certification or other statement of compliance with the requirements of this document shall not be attributable to the NFPA and is solely the responsibility of the certifier or maker of the statement.

Copyright National Fire Protection Association
Provided by IHS under license with NFPA
No reproduction or networking permitted without license from IHS
Not for Resale

ADDITIONAL NOTICES AND DISCLAIMERS

Updating of NFPA Documents

Users of NFPA codes, standards, recommended practices, and guides should be aware that these documents may be superseded at any time by the issuance of new editions or may be amended from time to time through the issuance of Tentative Interim Amendments. An official NFPA document at any point in time consists of the current edition of the document together with any Tentative Interim Amendments and any Errata then in effect. In order to determine whether a given document is the current edition and whether it has been amended through the issuance of Tentative Interim Amendments or corrected through the issuance of Errata, consult appropriate NFPA publications such as the National Fire Codes® Subscription Service, visit the NFPA website at www.nfpa.org, or contact the NFPA at the address listed below.

Interpretations of NFPA Documents

A statement, written or oral, that is not processed in accordance with Section 6 of the Regulations Governing Committee Projects shall not be considered the official position of NFPA or any of its Committees and shall not be considered to be, nor be relied upon as, a Formal Interpretation.

Patents

The NFPA does not take any position with respect to the validity of any patent rights asserted in connection with any items which are mentioned in or are the subject of NFPA codes, standards, recommended practices, and guides, and the NFPA disclaims liability for the infringement of any patent resulting from the use of or reliance on these documents. Users of these documents are expressly advised that determination of the validity of any such patent rights, and the risk of infringement of such rights, is entirely their own responsibility.

NFPA adheres to applicable policies of the American National Standards Institute with respect to patents. For further information contact the NFPA at the address listed below.

Law and Regulations

Users of these documents should consult applicable federal, state, and local laws and regulations. NFPA does not, by the publication of its codes, standards, recommended practices, and guides, intend to urge action that is not in compliance with applicable laws, and these documents may not be construed as doing so.

Copyrights

This document is copyrighted by the NFPA. It is made available for a wide variety of both public and private uses. These include both use, by reference, in laws and regulations, and use in private self-regulation, standardization, and the promotion of safe practices and methods. By making this document available for use and adoption by public authorities and private users, the NFPA does not waive any rights in copyright to this document.

Use of NFPA documents for regulatory purposes should be accomplished through adoption by reference. The term "adoption by reference" means the citing of title, edition, and publishing information only. Any deletions, additions, and changes desired by the adopting authority should be noted separately in the adopting instrument. In order to assist NFPA in following the uses made of its documents, adopting authorities are requested to notify the NFPA (Attention: Secretary, Standards Council) in writing of such use. For technical assistance and questions concerning adoption of NFPA documents, contact NFPA at the address below.

For Further Information

All questions or other communications relating to NFPA codes, standards, recommended practices, and guides and all requests for information on NFPA procedures governing its codes and standards development process, including information on the procedures for requesting Formal Interpretations, for proposing Tentative Interim Amendments, and for proposing revisions to NFPA documents during regular revision cycles, should be sent to NFPA headquarters, addressed to the attention of the Secretary, Standards Council, NFPA, 1 Batterymarch Park, P.O. Box 9101, Quincy, MA 02269-9101.

For more information about NFPA, visit the NFPA website at www.nfpa.org.

Copyright National Fire Protection Association
Provided by IHS under license with NFPA
No reproduction or networking permitted without license from IHS
Not for Resale

Copyright © 2008 National Fire Protection Association®. All Rights Reserved.

NFPA® 275

Standard

Method of Fire Tests for the Evaluation of Thermal Barriers Used Over Foam Plastic Insulation

2009 Edition

This edition of NFPA 275, *Standard Method of Fire Tests for the Evaluation of Thermal Barriers Used Over Foam Plastic Insulation*, was prepared by the Technical Committee on Fire Tests and acted on by NFPA at its June Association Technical Meeting held June 2–5, 2008, in Las Vegas, NV. It was issued by the Standards Council on July 24, 2008, with an effective date of September 5, 2008.

This edition of NFPA 275 was approved as an American National Standard on September 5, 2008.

Origin and Development of NFPA 275

The 2009 edition is the first of NFPA 275, *Standard Method of Fire Tests for the Evaluation of Thermal Barriers Used Over Foam Plastic Insulation*. Several NFPA codes and standards, as well as other model codes, include provisions that require portions of buildings to be separated by 15-minute thermal barriers. Building and fire regulations have traditionally addressed thermal barriers in vague and imprecise terms. Provisions of other codes and standards indicate that thermal barriers are intended to limit thermal transmission based on fire resistance testing and must remain in place based on a full-scale test. The new NFPA 275 fire test methods identify specific sample construction, fire exposures, and acceptance criteria to qualify a material or product for use as a thermal barrier. It is anticipated that this test method will be referenced by other model building and fire codes and standards.

NFPA and National Fire Protection Association are registered trademarks of the National Fire Protection Association, Quincy, Massachusetts, 02169.

Copyright National Fire Protection Association
Provided by IHS under license with NFPA
No reproduction or networking permitted without license from IHS

Not for Resale

Technical Committee on Fire Tests

William E. Fitch, *Chair*
Phyrefish Enterprises, Inc., FL [SE]

Farid Alfawakhiri, American Iron and Steel Institute, IL [M]
Barry L. Badders, Jr., Southwest Research Institute, TX [RT]
Jesse J. Beitel, Hughes Associates, Inc., MD [SE]
April L. Berkol, Starwood Hotels & Resorts Worldwide, Inc., NY [U]
Rep. American Hotel & Lodging Association
Robert G. Bill, Jr., FM Global, MA [I]
John A. Blair, The DuPont Company, DE [M]
Rep. Society of the Plastics Industry, Inc.
Gordon H. Damant, Inter-City Testing & Consulting Corp. of California, CA [SE]
Thomas W. Fritz, Armstrong World Industries, Inc., PA [M]
Gordon E. Hartzell, Hartzell Consulting, Inc., TX [SE]
Marcelo M. Hirschler, GBH International, CA [SE]
Alfred J. Hogan, Winter Haven, FL [E]
Rep. International Fire Marshals Association
William E. Koffel, Koffel Associates, Inc., MD [SE]
James R. Lawson, U.S. National Institute of Standards and Technology, MD [RT]
Rodney A. McPhee, Canadian Wood Council, Canada [M]
Frederick W. Mowrer, University of Maryland, MD [SE]
Deggary N. Priest, Intertek Testing Services NA, Inc., TX [RT]
David T. Sheppard, U.S. Bureau of Alcohol, Tobacco, Firearms and Explosives, MD [RT]
Dwayne E. Sloan, Underwriters Laboratories Inc., NC [RT]
Kuma Sumathipala, American Forest & Paper Association, DC [M]
T. Hugh Talley, Hugh Talley Company, TN [M]
Rep. Upholstered Furniture Action Council
Rick Thornberry, The Code Consortium, Inc., CA [SE]
William A. Webb, Schirmer Engineering Corporation, IL [I]
Robert A. Wessel, Gypsum Association, DC [M]

Alternates

Scott W. Adams, Park City Fire Service District, UT [E]
(Voting Alt. to IFMA Rep.)
Robert M. Berhinig, Underwriters Laboratories Inc., IL [RT]
(Alt. to D. E. Sloan)
Richard J. Davis, FM Global, MA [I]
(Alt. to R. G. Bill, Jr.)
Sam W. Francis, American Forest & Paper Association, PA [M]
(Alt. to K. Sumathipala)
Richard G. Gann, Ph.D., U.S. National Institute of Standards and Technology, MD [RT]
(Alt. to J. R. Lawson)
Paul A. Hough, Armstrong World Industries, Inc., PA [M]
(Alt. to T. W. Fritz)
Marc L. Janssens, Southwest Research Institute, TX [RT]
(Alt. to B. L. Badders, Jr.)
James K. Lathrop, Koffel Associates, Inc., CT [SE]
(Alt. to W. E. Koffel)
James A. Milke, University of Maryland, MD [SE]
(Alt. to F. W. Mowrer)
Arthur J. Parker, Hughes Associates, Inc., MD [SE]
(Alt. to J. J. Beitel)
Ineke Van Zeeland, Canadian Wood Council, Canada [M]
(Alt. to R. A. McPhee)
Robert J. Wills, American Iron and Steel Institute, AL [M]
(Alt. to F. Alfawakhiri)
Joe Ziolkowski, American Furniture Manufacturers Association, NC [M]
(Alt. to T. H. Talley)

Nonvoting

Robert H. Barker, American Fiber Manufacturers Association, VA [M]
Rohit Khanna, U.S. Consumer Product Safety Commission, MD [C]

Gregory E. Harrington, NFPA Staff Liaison

This list represents the membership at the time the Committee was balloted on the final text of this edition. Since that time, changes in the membership may have occurred. A key to classifications is found at the back of the document.

NOTE: Membership on a committee shall not in and of itself constitute an endorsement of the Association or any document developed by the committee on which the member serves.

Committee Scope: This Committee shall have primary responsibility for documents on fire testing procedures, for reviewing existing fire test standards and recommending appropriate action to NFPA, for recommending the application of and advising on the interpretation of acceptable test standards for fire problems of concern to NFPA technical committees and members, and for acting in a liaison capacity between NFPA and the committees of other organizations writing fire test standards. This Committee does not cover fire tests that are used to evaluate extinguishing agents, devices, or systems.

Copyright National Fire Protection Association
Provided by IHS under license with NFPA
No reproduction or networking permitted without license from IHS
Not for Resale

Contents

Chapter 1 Administration **275–** 4
1.1 Scope **275–** 4
1.2 Purpose **275–** 4
1.3 Application **275–** 4

Chapter 2 Referenced Publications **275–** 4
2.1 General **275–** 4
2.2 NFPA Publications **275–** 4
2.3 Other Publications **275–** 4
2.4 References for Extracts in Mandatory Sections **275–** 4

Chapter 3 Definitions **275–** 5
3.1 General **275–** 5
3.2 NFPA Official Definitions **275–** 5
3.3 General Definitions **275–** 5

Chapter 4 Temperature Transmission Fire Test (Part I) **275–** 5
4.1 Thermal Barrier Supporting Structure **275–** 5
4.2 Thermal Barrier Test Specimen **275–** 5
4.3 Test Specimen Instrumentation **275–** 6
4.4 Test Specimen Conditioning **275–** 6
4.5 Test Furnace **275–** 6
4.6 Control of Fire Test **275–** 6
4.7 Duration of Fire Test **275–** 7
4.8 Conditions of Acceptance **275–** 7

Chapter 5 Integrity Fire Test (Part II) **275–** 7
5.1 Test Method **275–** 7
5.2 Conditions of Acceptance **275–** 7

Chapter 6 Test Report **275–** 7
6.1 Test Report **275–** 7

Annex A Explanatory Material **275–** 8

Annex B Informational References **275–** 8

Index **275–** 9

Copyright National Fire Protection Association
Provided by IHS under license with NFPA
No reproduction or networking permitted without license from IHS
Not for Resale

NFPA 275

Standard

Method of Fire Tests for the Evaluation of Thermal Barriers Used Over Foam Plastic Insulation

2009 Edition

IMPORTANT NOTE: This NFPA document is made available for use subject to important notices and legal disclaimers. These notices and disclaimers appear in all publications containing this document and may be found under the heading "Important Notices and Disclaimers Concerning NFPA Documents." They can also be obtained on request from NFPA or viewed at www.nfpa.org/disclaimers.

NOTICE: An asterisk (*) following the number or letter designating a paragraph indicates that explanatory material on the paragraph can be found in Annex A.

A reference in brackets [ ] following a section or paragraph indicates material that has been extracted from another NFPA document. As an aid to the user, the complete title and edition of the source documents for extracts in mandatory sections of the document are given in Chapter 2 and those for extracts in informational sections are given in Annex B. Extracted text may be edited for consistency and style and may include the revision of internal paragraph references and other references as appropriate. Requests for interpretations or revisions of extracted text shall be sent to the technical committee responsible for the source document.

Information on referenced publications can be found in Chapter 2 and Annex B.

Chapter 1 Administration

1.1 Scope.

1.1.1* This method of fire tests for a thermal barrier for foam plastic insulation (herein referred to as *thermal barrier*) is applicable to building construction materials, products, or assemblies intended to be used to protect foam plastic insulation from direct fire exposure.

1.1.2 The performance of the thermal barrier is evaluated by its ability to limit the temperature rise on its unexposed surface and by the ability of the thermal barrier to remain intact in order to provide protection from ignition of the foam plastic insulation during a standard fire exposure.

1.2 Purpose. Two fire tests are conducted to determine the fire performance of the thermal barrier: Part I, Temperature Transmission Fire Test, and Part II, Integrity Fire Test.

1.2.1 Part I measures the temperature rise on the unexposed face of the thermal barrier when it is subjected to a standard fire exposure specified in NFPA 251, ASTM E 119, or UL 263.

1.2.2 Part II evaluates the ability of the thermal barrier to remain intact in order to provide protection from ignition of the foam plastic insulation by conducting a test of the thermal barrier and foam plastic insulation assembly in accordance with a standard room/corner fire test method.

1.3 Application.

1.3.1 This method of fire tests evaluates the ability of the thermal barrier to prevent ignition of foam plastic insulation from a standard fire exposure for a period of 15 minutes.

1.3.2 This method of fire tests also evaluates the ability of the thermal barrier to remain in place and prevent ignition of foam plastic insulation for a period of 15 minutes during a standard room/corner fire exposure.

1.3.3 This method of fire tests does not evaluate thermal barriers used in or on upholstered furniture or mattresses.

1.3.4 This standard does not purport to address all safety problems or considerations associated with its use.

Chapter 2 Referenced Publications

2.1 General. The documents or portions thereof listed in this chapter are referenced within this standard and shall be considered part of the requirements of this document.

2.2 NFPA Publications. National Fire Protection Association, 1 Batterymarch Park, Quincy, MA 02169-7471.

NFPA 251, *Standard Methods of Tests of Fire Resistance of Building Construction and Materials,* 2006 edition.

NFPA 286, *Standard Methods of Fire Tests for Evaluating Contribution of Wall and Ceiling Interior Finish to Room Fire Growth,* 2006 edition.

2.3 Other Publications.

2.3.1 ASTM Publications. ASTM International, 100 Barr Harbor Drive, West Conshohocken, PA 19428-2959.

ASTM E 119, *Standard Test Methods for Fire Tests of Building Construction and Materials*, 2000.

2.3.2 FMGR Publications. FM Global, 1301 Atwood Avenue, P.O. Box 7500, Johnston, RI 02919.

FM 4880, *Approval Standard for Class I Insulated Wall or Wall and Roof/Ceiling Panels; Plastic Interior Finish Materials; Plastic Exterior Building Panels; Wall/Ceiling Coating Systems; Interior or Exterior Finish Systems*, 1994.

2.3.3 UL Publications. Underwriters Laboratories Inc., 333 Pfingsten Road, Northbrook, IL 60062-2096.

UL 263, *Standard for Fire Tests of Building Construction and Materials*, 2003.

UL 1040, *Standard for Fire Test of Insulated Wall Construction*, 1996.

UL 1715, *Standard for Fire Test of Interior Finish Material*, 1997.

2.3.4 Other Publications.

Merriam-Webster's Collegiate Dictionary, 11th edition, Merriam-Webster, Inc., Springfield, MA, 2003.

2.4 References for Extracts in Mandatory Sections.

NFPA 5000®, Building Construction and Safety Code®, 2009 edition.

Copyright National Fire Protection Association
Provided by IHS under license with NFPA
No reproduction or networking permitted without license from IHS
Not for Resale

Chapter 3 Definitions

3.1 General. The definitions contained in this chapter shall apply to the terms used in this standard. Where terms are not defined in this chapter or within another chapter, they shall be defined using their ordinarily accepted meanings within the context in which they are used. *Merriam-Webster's Collegiate Dictionary,* 11th edition, shall be the source for the ordinarily accepted meaning.

3.2 NFPA Official Definitions.

3.2.1 Shall. Indicates a mandatory requirement.

3.2.2 Should. Indicates a recommendation or that which is advised but not required.

3.2.3 Standard. A document, the main text of which contains only mandatory provisions using the word "shall" to indicate requirements and which is in a form generally suitable for mandatory reference by another standard or code or for adoption into law. Nonmandatory provisions shall be located in an appendix or annex, footnote, or fine-print note and are not to be considered a part of the requirements of a standard.

3.3 General Definitions.

3.3.1 Foam Plastic Insulation. A cellular plastic, used for thermal insulating or acoustical applications, having a density of 20 lb/ft^3 (320 kg/m^3) or less, containing open or closed cells, and formed by a foaming agent. [***5000***, 2009]

3.3.2 Metal Composite Material (MCM). A factory-manufactured panel consisting of metal skins bonded to both faces of a core made of any plastic other than foam plastic insulation.

3.3.3 Thermal Barrier for Foam Plastic Insulation (Thermal Barrier). A material, product, or assembly that prevents or delays ignition of foam plastic insulation by limiting the temperature rise on the surface of the foam plastic insulation and by acting as a flame exposure barrier to the foam plastic insulation for a 15-minute time period.

Chapter 4 Temperature Transmission Fire Test (Part I)

4.1 Thermal Barrier Supporting Structure. The thermal barrier supporting structure shall be constructed as a wood stud frame and calcium-silicate board sandwich having minimum dimensions of 36 in. × 36 in. (915 mm × 915 mm).

4.1.1 The supporting structure shall be framed by nominal 2 in. × 4 in. (38 mm × 89 mm) wood studs.

4.1.1.1 The wood studs shall be oriented with the nominal 4 in. (89 mm) side vertical.

4.1.1.2 One additional wood stud shall be positioned in the center of the wood stud framing, parallel to two opposite sides.

4.1.1.3 Each wood stud connection point shall be secured using two evenly spaced 10d nails driven into the ends of the studs.

4.1.2 A single layer of nominal ½ in. (13 mm) thick nominal 46 lb/ft^3 (736 kg/m^3) density calcium-silicate board shall be installed on both faces of the supporting structure.

4.1.3 Each calcium-silicate board shall be secured to each wood stud of the supporting structure using nominal 1¼ in. (32 mm) long drywall screws, spaced a maximum of 9 in. (229 mm) on center around the perimeter and in the field of the board.

4.1.4 The wood stud and calcium-silicate board test specimen supporting structure shall be constructed as shown in Figure 4.1.4.

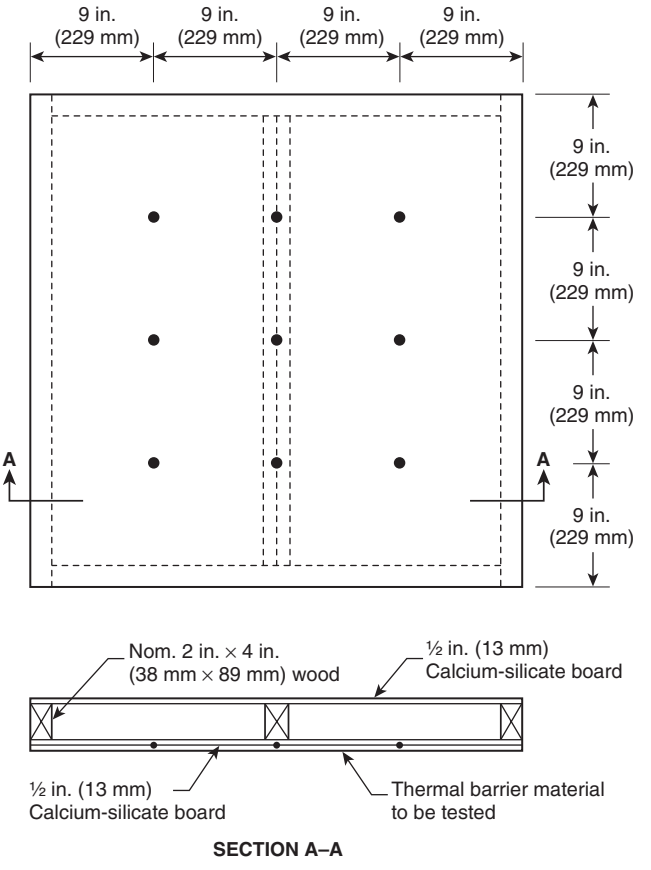

FIGURE 4.1.4 Thermal Barrier Supporting Structure.

4.2 Thermal Barrier Test Specimen. The thermal barrier test specimen shall consist of the thermal barrier supporting structure with the thermal barrier installed on one side.

4.2.1 The side of the test specimen with the installed thermal barrier shall be designated as the exposed face.

4.2.2 The thermal barrier and the method of securing the thermal barrier shall be representative of the construction for which the thermal barrier is being evaluated.

4.2.3 If joints are a component of the thermal barrier installation in actual use, a minimum of one representative joint shall be incorporated into the thermal barrier.

4.2.4 The joint described in 4.2.3 shall be located in the centerline of the test specimen.

Copyright National Fire Protection Association
Provided by IHS under license with NFPA
No reproduction or networking permitted without license from IHS
Not for Resale

4.3 Test Specimen Instrumentation.

4.3.1 The temperature at the interface of the thermal barrier and the calcium-silicate board shall be measured by a minimum of nine thermocouples.

4.3.2 The thermocouples shall be symmetrically distributed across the surface of the exposed face of the calcium-silicate board as shown in Figure 4.1.4.

4.3.3 The wire leads of each thermocouple shall be in the plane of the interface of the thermal barrier and the exposed face of the calcium-silicate board for a length of not less than 1.5 in. (38 mm).

4.3.4 The thermocouples shall be Type K, with wire leads not greater than 20 AWG [0.032 in. (0.81 mm)] in diameter.

4.3.5 The temperatures measured by the thermocouples shall be measured and recorded at intervals not exceeding 15 seconds.

4.4 Test Specimen Conditioning.

4.4.1 Before the fire test is conducted, the test specimen shall be conditioned to a constant weight at a temperature of 70°F ±5°F (21°C ±3°C) and at a relative humidity of 50 percent ±5 percent.

4.4.2 Constant weight as specified in 4.4.1 shall be considered to have been reached when two successive weighing operations, carried out at an interval of 24 hours, differ by not more than 1 percent.

4.4.3 The test shall be started within 30 minutes of removal of the test specimen from the conditioning area.

4.5 Test Furnace.

4.5.1 The test furnace shall be constructed so as to expose the test specimen in a horizontal configuration mounted on top of the furnace.

4.5.2 The side of the test specimen with the thermal barrier installed shall be exposed to the fire.

4.5.3 The test furnace shall be gas fired and shall be capable of generating and containing a fire exposure controlled to the time–temperature curve as specified in NFPA 251, ASTM E 119, or UL 263 for a period of 15 minutes.

4.5.4 The furnace shall be designed to expose a minimum of a 31.5 in. × 31.5 in. (800 mm × 800 mm) portion of the test specimen.

4.6 Control of Fire Test.

4.6.1 Time–Temperature Curve.

4.6.1.1 The conduct of the fire test shall be controlled by the standard time–temperature curve in accordance with Table 4.6.1.1 for a period of 15 minutes.

4.6.1.2 The temperature inside the furnace shall be within the range of 50°F to 90°F (10°C to 32°C) at the start of the fire test.

4.6.2 Furnace Temperatures. The temperatures in the furnace as determined by the time–temperature curve shall be the average temperature measured by not fewer than three furnace thermocouples.

4.6.2.1 The furnace thermocouples shall be uniformly distributed in a horizontal plane located 12 in. ±½ in. (305 mm ±13 mm) below the test specimen's exposed face.

Table 4.6.1.1 Time–Temperature Curve

Time (minutes)	Temperature °F	Temperature °C
0	68	20
5	1000	538
10	1300	704
15	1399	760

4.6.2.2 The furnace thermocouples shall be as described in NFPA 251, ASTM E 119, or UL 263.

4.6.2.3 The minimum length of the thermocouple wire lead exposed within the furnace shall be not less than 12 in. (305 mm).

4.6.3 Accuracy of Furnace Control. The area under the time–temperature curve, obtained by averaging the results from the thermocouple readings, shall be within 10 percent of the corresponding area under the standard time–temperature curve specified in 4.6.1.1.

4.6.4 Furnace Pressure. The pressure differential between the exposed face of the test specimen and the laboratory test area shall be measured and controlled in accordance with 4.6.4.1 through 4.6.4.9.

4.6.4.1 The pressure-sensing probes shall be as shown in Figure 4.6.4.1.

4.6.4.2 The pressure shall be measured by not fewer than two pressure-sensing probes using a differential pressure instrument capable of being read in graduated increments no greater than 0.01 in. wg (2.5 Pa) with a precision of not more than ±0.005 in. wg (±1.25 Pa).

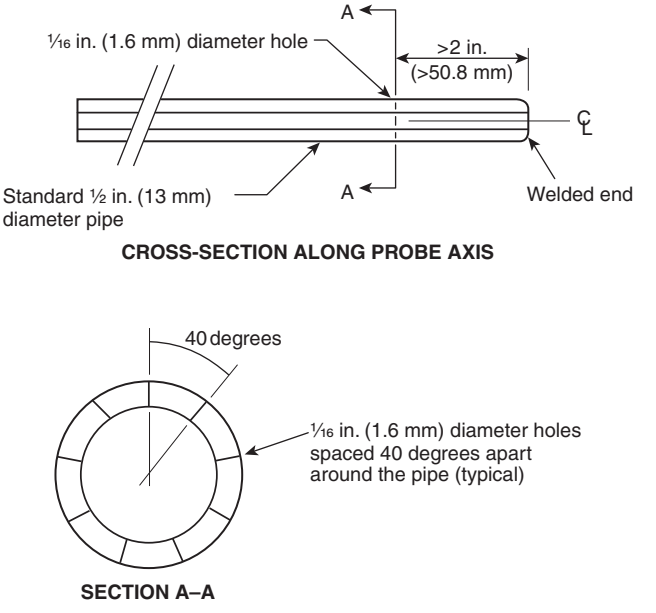

FIGURE 4.6.4.1 Furnace Pressure-Sensing Probe.

Copyright National Fire Protection Association
Provided by IHS under license with NFPA
No reproduction or networking permitted without license from IHS
Not for Resale

4.6.4.3 The differential pressure measurement instruments shall be located to minimize stack effects caused by vertical runs of pressure tubing between the pressure-sensing probes and the differential pressure measurement instrument locations.

4.6.4.4 Control of the furnace pressure shall be established beginning no later than 5 minutes after the start of the test and shall be maintained throughout the remainder of the fire test period.

4.6.4.5 The furnace pressure shall be measured and recorded throughout the fire test at intervals not exceeding 1 minute.

4.6.4.6* The pressure shall be reported as the average of each consecutive 3-minute period at 1-minute intervals starting at 3 minutes after the start of the fire test.

4.6.4.7 The pressure-sensing probes shall be located along the longitudinal centerline of the furnace and shall be 12 in. ±½ in. (305 mm ±13 mm) below the exposed surface of the test specimen.

4.6.4.8 The tips of the probes shall protrude into the furnace a minimum of 3 in. (76 mm) from the interior surface of a furnace wall.

4.6.4.9 During the fire test, the neutral pressure plane in the furnace shall be established below the exposed face of the test specimen such that a positive pressure exists over the entire exposed face of the test specimen after the first 5 minutes of the fire test.

4.7 Duration of Fire Test. The fire test shall be conducted for a period of 15 minutes or until the thermal barrier falls away from the thermal barrier supporting structure or disintegrates, whichever occurs first.

4.8 Conditions of Acceptance.

4.8.1 During the 15-minute test period, the average measured temperature rise above the average temperature at the start of the fire test for the thermocouples described in Section 4.3 shall not exceed 250°F (139°C), and the measured temperature rise of any such single thermocouple shall not exceed 325°F (181°C).

4.8.2 If the average temperature rise or the temperature rise of a single thermocouple exceeds the limits specified in 4.8.1 during the test period, the time of occurrence shall be reported.

Chapter 5 Integrity Fire Test (Part II)

5.1 Test Method. The thermal barrier and foam plastic insulation shall be tested in accordance with NFPA 286, FM 4880, UL 1040, or UL 1715.

5.1.1 The specific type of foam plastic insulation to be protected by the thermal barrier shall be installed on a substrate and shall form the interior surface of the test walls and ceiling.

5.1.2 The thermal barrier shall be installed over the interior face of the foam plastic insulation in the manner for which recognition is desired, except as indicated in 5.1.3.

5.1.3 If the thermal barrier is intended to be used over metal composite materials (MCM), the MCM shall be tested at the maximum thickness intended for use.

5.1.4 The assemblage of foam plastic insulation and applied thermal barrier described in 5.1.2 or 5.1.3, as applicable, shall be considered the test assembly.

5.2 Conditions of Acceptance.

5.2.1 The conditions of acceptance for fire tests conducted in accordance with FM 4880, UL 1040, or UL 1715 shall be as specified in the fire test standard used.

5.2.2 For fire tests conducted using NFPA 286, the conditions of acceptance shall be as specified in 5.2.2.1 through 5.2.2.2.4.

5.2.2.1 During the 40 kW fire exposure portion of the test, flames shall not spread to the ceiling.

5.2.2.2 During the 160 kW fire exposure portion of the test, the test assembly shall comply with 5.2.2.2.1 through 5.2.2.2.4.

5.2.2.2.1 Flames shall not spread to the outer extremity of the test assembly on any wall or ceiling.

5.2.2.2.2 Flashover, as defined by NFPA 286, shall not occur.

5.2.2.2.3 The peak rate of heat release throughout the NFPA 286 test shall not exceed 800 kW.

5.2.2.2.4 The total smoke released throughout the NFPA 286 test shall not exceed 1000 m^2.

Chapter 6 Test Report

6.1 Test Report. A test report shall include the following information at a minimum:

(1) Name of the testing laboratory and the test date
(2) Names of the sponsor or customer, the manufacturer, and the material, product, or assembly tested
(3) Documentation of how and when the test specimen and test assembly were prepared and details of the application of the thermal barrier for both fire test methods (Parts I and II)
(4) Temperature readings of the furnace thermocouples and a comparison to the standard time–temperature curve in NFPA 251
(5) Temperature readings of the thermocouples described in Section 4.3
(6) Pressure measurements in the furnace during the Part I test
(7) Statement as to whether the thermal barrier met the Conditions of Acceptance in the Part I test
(8) Density, thickness, and type of foam plastic used in the Part II test
(9) The information required to be reported as specified in the fire test used in the Part II test
(10) Statement as to whether the thermal barrier met the Conditions of Acceptance in the Part II test
(11) Observations made during both fire tests (Parts I and II) by the laboratory personnel conducting the tests and the times at which such observations were made
(12) Statement as to whether the proposed thermal barrier material, product, or assembly met the Conditions of Acceptance in both the Part I and Part II tests

Copyright National Fire Protection Association
Provided by IHS under license with NFPA
No reproduction or networking permitted without license from IHS
Not for Resale

Annex A Explanatory Material

Annex A is not a part of the requirements of this NFPA document but is included for informational purposes only. This annex contains explanatory material, numbered to correspond with the applicable text paragraphs.

A.1.1.1 Model building codes require foam plastic insulation to be covered by a thermal barrier to reduce the possibility of ignition or delay its occurrence. The typical time specified is 15 minutes based on a fire exposure similar to that in NFPA 251, ASTM E 119, or UL 263. The fire exposure conditions in these test methods are similar.

A.4.6.4.6 This is equivalent to a 3-minute running average.

Annex B Informational References

B.1 Referenced Publications. The documents or portions thereof listed in this annex are referenced within the informational sections of this standard and are not part of the requirements of this document unless also listed in Chapter 2 for other reasons.

B.1.1 NFPA Publications. National Fire Protection Association, 1 Batterymarch Park, Quincy, MA 02169-7471.

NFPA 251, *Standard Methods of Tests of Fire Resistance of Building Construction and Materials*, 2006 edition.

B.1.2 Other Publications.

B.1.2.1 ASTM Publications. ASTM International, 100 Barr Harbor Drive, P.O. Box C700, West Conshohocken, PA 10016-5990.

ASTM E 119, *Standard Test Methods for Fire Tests of Building Construction and Materials*, 2000.

B.1.2.2 UL Publications. Underwriters Laboratories Inc., 333 Pfingsten Road, Northbrook, IL 60062-2096.

UL 263, *Standard for Fire Tests of Building Construction and Materials*, 2003.

B.2 Informational References. (Reserved)

B.3 References for Extracts in Informational Sections. (Reserved)

Copyright National Fire Protection Association
Provided by IHS under license with NFPA
No reproduction or networking permitted without license from IHS
Not for Resale

Index

Copyright © 2008 National Fire Protection Association. All Rights Reserved.

The copyright in this index is separate and distinct from the copyright in the document that it indexes. The licensing provisions set forth for the document are not applicable to this index. This index may not be reproduced in whole or in part by any means without the express written permission of NFPA.

-A-

Application of standard 1.3

-C-

Conditions of acceptance
Integrity fire test (Part II) ..... 5.2, 6.1(10), 6.1(12)
Temperature transmission fire test (Part I) .... 4.8, 6.1(7), 6.1(12)

-D-

Definitions ..... Chap. 3

-F-

Flame spread 5.2.2.1, 5.2.2.2.1
Flashover 5.2.2.2.2
Foam plastic insulation (definition) 3.3.1
Furnace, test .....*see* Temperature transmission fire test (Part I)

-I-

Integrity fire test (Part II) ..... Chap. 5
Conditions of acceptance ..... 5.2, 6.1(10), 6.1(12)
Test method ..... 5.1, 6.1(3)
Test report ..... Chap. 6

-M-

Metal composite material (MCM) 5.1.3
Definition 3.3.2

-P-

Pressure, furnace ..... 4.6.4, 6.1(6), A.4.6.4.6
Differential pressure instruments 4.6.4.2, 4.6.4.3
Pressure-sensing probes ..... 4.6.4.1 to 4.6.4.3, 4.6.4.7, 4.6.4.8
Purpose of standard 1.2

-R-

References ..... Chap. 2, Annex B

-S-

Scope of standard 1.1, A.1.1.1
Shall (definition) 3.2.1
Should (definition) 3.2.2
Smoke release, total 5.2.2.2.4
Standard (definition) 3.2.3

-T-

Temperature transmission fire test (Part I) ..... Chap. 4
Conditions of acceptance ..... 4.8, 6.1(7), 6.1(12)
Control of test 4.6, A.4.6.4.6
Accuracy of furnace control 4.6.3
Furnace pressure ..... 4.6.4, 6.1(6), A.4.6.4.6
Furnace temperature 4.6.1.2, 4.6.2
Time–temperature curve ..... 4.5.3, 4.6.1 to 4.6.3, 6.1(4)
Duration of fire test 4.7
Furnace, test 4.5
Control, accuracy of 4.6.3
Pressure ..... 4.6.4, 6.1(6), A.4.6.4.6
Temperature 4.6.1.2, 4.6.2
Supporting structure for thermal barrier 4.1
Test report ..... Chap. 6
Test specimen ..... 4.2, 6.1(3)
Conditioning 4.4
Instrumentation 4.3
Mounting in furnace 4.5.1, 4.5.2, 4.5.4
Pressure differential, measurement of ... 4.6.4, 6.1(6), A.4.6.4.6
Test assembly, integrity fire test ..... 5.1.2 to 5.1.4, 6.1(3)
Test report ..... Chap. 6
Test specimen, temperature transmission fire test ...*see* Temperature transmission fire test (Part I)
Thermal barrier for foam plastic insulation (thermal barrier) (definition) 3.3.3
Thermocouples ..... 4.3.2, 4.6.2, 4.6.3, 4.8, 6.1(4), 6.1(5)

Copyright National Fire Protection Association
Provided by IHS under license with NFPA
No reproduction or networking permitted without license from IHS
Not for Resale

Sequence of Events Leading to Issuance of an NFPA Committee Document

Step 1: Call for Proposals

- Proposed new Document or new edition of an existing Document is entered into one of two yearly revision cycles, and a Call for Proposals is published.

Step 2: Report on Proposals (ROP)

- Committee meets to act on Proposals, to develop its own Proposals, and to prepare its Report.
- Committee votes by written ballot on Proposals. If two-thirds approve, Report goes forward. Lacking two-thirds approval, Report returns to Committee.
- Report on Proposals (ROP) is published for public review and comment.

Step 3: Report on Comments (ROC)

- Committee meets to act on Public Comments to develop its own Comments, and to prepare its report.
- Committee votes by written ballot on Comments. If two-thirds approve, Report goes forward. Lacking two-thirds approval, Report returns to Committee.
- Report on Comments (ROC) is published for public review.

Step 4: Technical Report Session

- "*Notices of intent to make a motion"* are filed, are reviewed, and valid motions are certified for presentation at the Technical Report Session. ("Consent Documents" that have no certified motions bypass the Technical Report Session and proceed to the Standards Council for issuance.)
- NFPA membership meets each June at the Annual Meeting Technical Report Session and acts on Technical Committee Reports (ROP and ROC) for Documents with "certified amending motions."
- Committee(s) vote on any amendments to Report approved at NFPA Annual Membership Meeting.

Step 5: Standards Council Issuance

- Notification of intent to file an appeal to the Standards Council on Association action must be filed within 20 days of the NFPA Annual Membership Meeting.
- Standards Council decides, based on all evidence, whether or not to issue Document or to take other action, including hearing any appeals.

Committee Membership Classifications

The following classifications apply to Technical Committee members and represent their principal interest in the activity of the committee.

M *Manufacturer:* A representative of a maker or marketer of a product, assembly, or system, or portion thereof, that is affected by the standard.

U *User:* A representative of an entity that is subject to the provisions of the standard or that voluntarily uses the standard.

I/M *Installer/Maintainer:* A representative of an entity that is in the business of installing or maintaining a product, assembly, or system affected by the standard.

L *Labor:* A labor representative or employee concerned with safety in the workplace.

R/T *Applied Research/Testing Laboratory:* A representative of an independent testing laboratory or independent applied research organization that promulgates and/or enforces standards.

E *Enforcing Authority:* A representative of an agency or an organization that promulgates and/or enforces standards.

I *Insurance:* A representative of an insurance company, broker, agent, bureau, or inspection agency.

C *Consumer:* A person who is, or represents, the ultimate purchaser of a product, system, or service affected by the standard, but who is not included in the *User* classification.

SE *Special Expert:* A person not representing any of the previous classifications, but who has a special expertise in the scope of the standard or portion thereof.

NOTES;
1. "Standard" connotes code, standard, recommended practice, or guide.
2. A representative includes an employee.
3. While these classifications will be used by the Standards Council to achieve a balance for Technical Committees, the Standards Council may determine that new classifications of members or unique interests need representation in order to foster the best possible committee deliberations on any project. In this connection, the Standards Council may make appointments as it deems appropriate in the public interest, such as the classification of "Utilities" in the National Electrical Code Committee.
4. Representatives of subsidiaries of any group are generally considered to have the same classification as the parent organization.

--`,,```,,,,````-`-`,,`,,`,`,,`---
Copyright National Fire Protection Association
Provided by IHS under license with NFPA
No reproduction or networking permitted without license from IHS
Not for Resale

NFPA Technical Committee Document Proposal Form

NOTE: All Proposals must be received by 5:00 pm EST/EDST on the published Proposal Closing Date.

For further information on the standards-making process, please contact the Codes and Standards Administration at 617-984-7249 or visit www.nfpa.org/codes.

For technical assistance, please call NFPA at 1-800-344-3555.

FOR OFFICE USE ONLY

Log #:

Date Rec'd:

Please indicate in which format you wish to receive your ROP/ROC ☐ **electronic** ☐ **paper** ☒ **download**
(Note: If choosing the download option, you must view the ROP/ROC from our website; no copy will be sent to you.)

Date April 1, 200X **Name** John J. Doe **Tel. No.** 716-555-1234

Company Air Canada Pilot's Association **Email**

Street Address 123 Summer Street Lane **City** Lewiston **State** NY **Zip** 14092

******If you wish to receive a hard copy, a street address MUST be provided. Deliveries cannot be made to PO boxes.***

Please indicate organization represented (if any)

1. (a) NFPA Document Title National Fuel Gas Code **NFPA No. & Year** 54, 200X Edition

(b) Section/Paragraph 3.3

2. Proposal Recommends (check one): ☐ new text ☒ revised text ☐ deleted text

3. Proposal (include proposed new or revised wording, or identification of wording to be deleted): [Note: Proposed text should be in legislative format; i.e., use underscore to denote wording to be inserted (inserted wording) and strike-through to denote wording to be deleted (~~deleted wording~~).]

Revise definition of effective ground-fault current path to read:

3.3.78 Effective Ground-Fault Current Path. An intentionally constructed, permanent, low impedance electrically conductive path designed and intended to carry ~~underground~~ electric fault current ~~conditions~~ from the point of a ground fault on a wiring system to the electrical supply source.

4. Statement of Problem and Substantiation for Proposal: (Note: State the problem that would be resolved by your recommendation; give the specific reason for your Proposal, including copies of tests, research papers, fire experience, etc. If more than 200 words, it may be abstracted for publication.)

Change uses proper electrical terms.

5. Copyright Assignment

(a) ☐ **I am the author of the text or other material (such as illustrations, graphs) proposed in this Proposal.**

(b) ☒ **Some or all of the text or other material proposed in this Proposal was not authored by me. Its source is as follows** (please identify which material and provide complete information on its source)**:**

ABC Co.

I agree that any material that I author, either individually or with others, in connection with work performed by an NFPA Technical Committee shall be considered to be works made for hire for the NFPA. To the extent that I retain any rights in copyright as to such material, or as to any other material authored by me that I submit for the use of an NFPA Technical Committee in the drafting of an NFPA code, standard, or other NFPA document, I hereby grant and assign all and full rights in copyright to the NFPA. I further agree and acknowledge that I acquire no rights in any publication of the NFPA and that copyright and all rights in materials produced by NFPA Technical Committees are owned by the NFPA and that the NFPA may register copyright in its own name.

Signature (Required)

PLEASE USE SEPARATE FORM FOR EACH PROPOSAL • email: proposals_comments@nfpa.org • NFPA Fax: (617) 770-3500
Mail to: Secretary, Standards Council, National Fire Protection Association, 1 Batterymarch Park, Quincy, MA 02169-7471

6/11/2008

SAMPLE

Copyright National Fire Protection Association
Provided by IHS under license with NFPA
No reproduction or networking permitted without license from IHS
Not for Resale

NFPA Technical Committee Document Proposal Form

NOTE: All Proposals must be received by 5:00 pm EST/EDST on the published Proposal Closing Date.

For further information on the standards-making process, please contact the Codes and Standards Administration at 617-984-7249 or visit www.nfpa.org/codes.

For technical assistance, please call NFPA at 1-800-344-3555.

FOR OFFICE USE ONLY

Log #: _____

Date Rec'd: _____

Please indicate in which format you wish to receive your ROP/ROC ☐ electronic ☐ paper ☐ download
(Note: If choosing the download option, you must view the ROP/ROC from our website; no copy will be sent to you.)

Date _____ **Name** _____ **Tel. No.** _____

Company _____ **Email** _____

Street Address _____ **City** _____ **State** _____ **Zip** _____

******If you wish to receive a hard copy, a street address MUST be provided. Deliveries cannot be made to PO boxes.*** _____

Please indicate organization represented (if any) _____

1. (a) NFPA Document Title _____ **NFPA No. & Year** _____

(b) Section/Paragraph _____

2. Proposal Recommends (check one): ☐ new text ☐ revised text ☐ deleted text

3. Proposal (include proposed new or revised wording, or identification of wording to be deleted): [Note: Proposed text should be in legislative format; i.e., use underscore to denote wording to be inserted (inserted wording) and strike-through to denote wording to be deleted (~~deleted wording~~).]

4. Statement of Problem and Substantiation for Proposal: (Note: State the problem that would be resolved by your recommendation; give the specific reason for your Proposal, including copies of tests, research papers, fire experience, etc. If more than 200 words, it may be abstracted for publication.)

5. Copyright Assignment

(a) ☐ I am the author of the text or other material (such as illustrations, graphs) proposed in this Proposal.

(b) ☐ Some or all of the text or other material proposed in this Proposal was not authored by me. Its source is as follows (please identify which material and provide complete information on its source)**:**

_____

I agree that any material that I author, either individually or with others, in connection with work performed by an NFPA Technical Committee shall be considered to be works made for hire for the NFPA. To the extent that I retain any rights in copyright as to such material, or as to any other material authored by me that I submit for the use of an NFPA Technical Committee in the drafting of an NFPA code, standard, or other NFPA document, I hereby grant and assign all and full rights in copyright to the NFPA. I further agree and acknowledge that I acquire no rights in any publication of the NFPA and that copyright and all rights in materials produced by NFPA Technical Committees are owned by the NFPA and that the NFPA may register copyright in its own name.

Signature (Required) _____

PLEASE USE SEPARATE FORM FOR EACH PROPOSAL • email: proposals_comments@nfpa.org • NFPA Fax: (617) 770-3500
Mail to: Secretary, Standards Council, National Fire Protection Association, 1 Batterymarch Park, Quincy, MA 02169-7471

6/11/2008

Copyright National Fire Protection Association
Provided by IHS under license with NFPA
No reproduction or networking permitted without license from IHS
Not for Resale