NFPA 274

Standard Test Method to Evaluate Fire Performance Characteristics of Pipe Insulation

2003 Edition

NFPA, 1 Batterymarch Park, PO Box 9101, Quincy, MA 02269-9101
An International Codes and Standards Organization

NFPA License Agreement

This document is copyrighted by the National Fire Protection Association (NFPA), 1 Batterymarch Park, Quincy, MA 02269-9101 USA.
All rights reserved.

NFPA grants you a license as follows: The right to download an electronic file of this NFPA document for temporary storage on one computer for purposes of viewing and/or printing one copy of the NFPA document for individual use. Neither the electronic file nor the hard copy print may be reproduced in any way. In addition, the electronic file may not be distributed elsewhere over computer networks or otherwise. The hard copy print may only be used personally or distributed to other employees for their internal use within your organization.

Copyright National Fire Protection Association
Provided by IHS under license with NFPA
No reproduction or networking permitted without license from IHS

Not for Resale

IMPORTANT NOTICES AND DISCLAIMERS CONCERNING NFPA DOCUMENTS

NOTICE AND DISCLAIMER OF LIABILITY CONCERNING THE USE OF NFPA DOCUMENTS

NFPA codes, standards, recommended practices, and guides, of which the document contained herein is one, are developed through a consensus standards development process approved by the American National Standards Institute. This process brings together volunteers representing varied viewpoints and interests to achieve consensus on fire and other safety issues. While the NFPA administers the process and establishes rules to promote fairness in the development of consensus, it does not independently test, evaluate, or verify the accuracy of any information or the soundness of any judgments contained in its codes and standards.

The NFPA disclaims liability for any personal injury, property or other damages of any nature whatsoever, whether special, indirect, consequential or compensatory, directly or indirectly resulting from the publication, use of, or reliance on this document. The NFPA also makes no guaranty or warranty as to the accuracy or completeness of any information published herein.

In issuing and making this document available, the NFPA is not undertaking to render professional or other services for or on behalf of any person or entity. Nor is the NFPA undertaking to perform any duty owed by any person or entity to someone else. Anyone using this document should rely on his or her own independent judgment or, as appropriate, seek the advice of a competent professional in determining the exercise of reasonable care in any given circumstances.

The NFPA has no power, nor does it undertake, to police or enforce compliance with the contents of this document. Nor does the NFPA list, certify, test or inspect products, designs, or installations for compliance with this document. Any certification or other statement of compliance with the requirements of this document shall not be attributable to the NFPA and is solely the responsibility of the certifier or maker of the statement.

Copyright National Fire Protection Association
Provided by IHS under license with NFPA
No reproduction or networking permitted without license from IHS
Not for Resale

ADDITIONAL NOTICES AND DISCLAIMERS

Updating of NFPA Documents

Users of NFPA codes, standards, recommended practices, and guides should be aware that these documents may be superseded at any time by the issuance of new editions or may be amended from time to time through the issuance of Tentative Interim Amendments. An official NFPA document at any point in time consists of the current edition of the document together with any Tentative Interim Amendments and any Errata then in effect. In order to determine whether a given document is the current edition and whether it has been amended through the issuance of Tentative Interim Amendments or corrected through the issuance of Errata, consult appropriate NFPA publications such as the National Fire Codes® Subscription Service, visit the NFPA website at www.nfpa.org, or contact the NFPA at the address listed below.

Interpretations of NFPA Documents

A statement, written or oral, that is not processed in accordance with Section 6 of the Regulations Governing Committee Projects shall not be considered the official position of NFPA or any of its Committees and shall not be considered to be, nor be relied upon as, a Formal Interpretation.

Patents

The NFPA does not take any position with respect to the validity of any patent rights asserted in connection with any items which are mentioned in or are the subject of NFPA codes, standards, recommended practices, and guides, and the NFPA disclaims liability for the infringement of any patent resulting from the use of or reliance on these documents. Users of these documents are expressly advised that determination of the validity of any such patent rights, and the risk of infringement of such rights, is entirely their own responsibility.

NFPA adheres to applicable policies of the American National Standards Institute with respect to patents. For further information contact the NFPA at the address listed below.

Law and Regulations

Users of these documents should consult applicable federal, state, and local laws and regulations. NFPA does not, by the publication of its codes, standards, recommended practices, and guides, intend to urge action that is not in compliance with applicable laws, and these documents may not be construed as doing so.

Copyrights

This document is copyrighted by the NFPA. It is made available for a wide variety of both public and private uses. These include both use, by reference, in laws and regulations, and use in private self-regulation, standardization, and the promotion of safe practices and methods. By making this document available for use and adoption by public authorities and private users, the NFPA does not waive any rights in copyright to this document.

Use of NFPA documents for regulatory purposes should be accomplished through adoption by reference. The term “adoption by reference” means the citing of title, edition, and publishing information only. Any deletions, additions, and changes desired by the adopting authority should be noted separately in the adopting instrument. In order to assist NFPA in following the uses made of its documents, adopting authorities are requested to notify the NFPA (Attention: Secretary, Standards Council) in writing of such use. For technical assistance and questions concerning adoption of NFPA documents, contact NFPA at the address below.

For Further Information

All questions or other communications relating to NFPA codes, standards, recommended practices, and guides and all requests for information on NFPA procedures governing its codes and standards development process, including information on the procedures for requesting Formal Interpretations, for proposing Tentative Interim Amendments, and for proposing revisions to NFPA documents during regular revision cycles, should be sent to NFPA headquarters, addressed to the attention of the Secretary, Standards Council, NFPA, 1 Batterymarch Park, P.O. Box 9101, Quincy, MA 02269-9101.

For more information about NFPA, visit the NFPA website at www.nfpa.org.

Copyright National Fire Protection Association
Provided by IHS under license with NFPA
No reproduction or networking permitted without license from IHS
Not for Resale

Copyright © 2003, National Fire Protection Association, All Rights Reserved

NFPA 274

Standard

Test Method to Evaluate Fire Performance Characteristics of Pipe Insulation

2003 Edition

This edition of NFPA 274, *Standard Test Method to Evaluate Fire Performance Characteristics of Pipe Insulation*, was prepared by the Technical Committee on Fire Tests and acted on by NFPA at its May Association Technical Meeting held May 18–21, 2003, in Dallas, TX. It was issued by the Standards Council on July 18, 2003, with an effective date of August 7, 2003.

This edition of NFPA 274 was approved as an American National Standard on July 18, 2003.

Origin and Development of NFPA 274

NFPA 274 was developed by the Technical Committee on Fire Tests to fill the need for a standard method of determining the fire performance of pipe insulation materials. Other codes and standards such as NFPA 90A, *Standard for the Installation of Air-Conditioning and Ventilating Systems*, have identified the issue of the installation of such materials in air-handling plenums. Although NFPA 274 does not prescribe pass or fail criteria, suggested acceptance criteria are provided in Annex B for consideration by the other referencing codes and standards.

Copyright National Fire Protection Association
Provided by IHS under license with NFPA
No reproduction or networking permitted without license from IHS
Not for Resale

Technical Committee on Fire Tests

William E. Fitch, *Chair*
Omega Point Laboratories Inc., TX [RT]

Patty K. Adair, American Textile Manufacturers Institute Inc., DC [M]
Jesse J. Beitel, Hughes Associates, Inc., MD [SE]
April L. Berkol, Starwood Hotels & Resorts Worldwide, Inc., NY [U]
Rep. American Hotel & Lodging Association
Robert G. Bill, Jr., FM Global, MA [I]
John A. Blair, The Dupont Company, DE [M]
Rep. Society of the Plastics Industry Inc.
Gordon H. Damant, Inter-City Testing & Consulting Corp. of California, CA [SE]
Thomas W. Fritz, Armstrong World Industries Inc., PA [M]
Pravinray D. Gandhi, Underwriters Laboratories Inc., IL [RT]
James R. Griffith, Southwest Research Institute, TX [RT]
Gordon E. Hartzell, Hartzell Consulting, Inc., TX [SE]
Marcelo M. Hirschler, GBH International, CA [SE]
Alfred J. Hogan, Reedy Creek Improvement District, FL [E]
Rep. International Fire Marshals Association
William E. Koffel, Koffel Associates, Inc., MD [SE]
James R. Lawson, U.S. National Institute of Standards & Technology, MD [RT]
Rodney A. McPhee, Canadian Wood Council, Canada, [M]
Frederick W. Mowrer, University of Maryland, MD [SE]
David T. Sheppard, U.S. Bureau of Alcohol, Tobacco & Firearms, MD [RT]
Kuma Sumathipala, American Forest & Paper Association, DC [M]
T. Hugh Talley, Hugh Talley Company, TN [M]
Rep. Upholstered Furniture Action Council
Rick Thornberry, The Code Consortium, Inc., CA [SE]
William A. Webb, Performance Technology Consulting, Ltd., IL [SE]
Robert A. Wessel, Gypsum Association, DC [M]
Robert J. Wills, American Iron and Steel Institute, AL [M]
Peter J. Willse, GE Global Asset Protection Services, CT [I]

Alternates

Robert M. Berhinig, Underwriters Laboratories Inc., IL [RT]
(Alt. to P. D. Gandhi)
Delbert F. Boring, Jr., American Iron and Steel Institute, OH [M]
(Alt. to R. J. Wills)
Sam W. Francis, American Forest & Paper Association, PA [M]
(Alt. to K. Sumathipala)
Richard G. Gann, Ph.D., U.S. National Institute of Standards & Technology, MD [RT]
(Alt. to J. R. Lawson)
Peter L. Hunsberger, Armstrong World Industries, Inc., PA [M]
(Alt. to T. W. Fritz)
James K. Lathrop, Koffel Associates, Inc., CT [SE]
(Alt. to W. E. Koffel)
James A. Milke, University of Maryland, MD [SE]
(Alt. to F. W. Mowrer)
Arthur J. Parker, Hughes Associates, Inc., MD [SE]
(Alt. to J. J. Beitel)
David K. Tanaka, FM Global, MA [I]
(Alt. to R. G. Bill)
Ineke Van Zeeland, Canadian Wood Council, Canada [M]
(Alt. to R. A. McPhee)
Joe Ziolkowski, American Furniture Manufacturers Association, NC [M]
(Alt. to T. H. Talley)

Nonvoting

Robert H. Barker, American Fiber Manufacturers Association, DC [M]
(Alt. to T. L. Jilg)
Tod L. Jilg, Hoechst Celanese Corporation, NC [M]
Rep. American Fiber Manufacturers Association
Rohit Khanna, U.S. Consumer Product Safety Commission, MD [C]
Herman H. Spaeth, Novato, CA
(Member Emeritus)

NFPA Staff Liaison (Vacant)

This list represents the membership at the time the Committee was balloted on the final text of this edition. Since that time, changes in the membership may have occurred. A key to classifications is found at the back of the document.

NOTE: Membership on a committee shall not in and of itself constitute an endorsement of the Association or any document developed by the committee on which the member serves.

Committee Scope: This Committee shall have primary responsibility for documents on fire testing procedures, for reviewing existing fire test standards and recommending appropriate action to NFPA, for recommending the application of and advising on the interpretation of acceptable test standards for fire problems of concern to NFPA technical committees and members, and for acting in a liaison capacity between NFPA and the committees of other organizations writing fire test standards. This Committee does not cover fire tests that are used to evaluate extinguishing agents, devices, or systems.

Copyright National Fire Protection Association
Provided by IHS under license with NFPA
No reproduction or networking permitted without license from IHS
Not for Resale

Contents

Chapter 1 Administration **274–** 4
1.1 Scope **274–** 4
1.2 Purpose **274–** 4
1.3 Application **274–** 4
1.4 Units and Formulas **274–** 4

Chapter 2 Referenced Publications (Reserved) **274–** 4

Chapter 3 Definitions **274–** 4
3.1 General **274–** 4
3.2 NFPA Official Definitions **274–** 4
3.3 General Definitions. (Reserved) **274–** 4

Chapter 4 Test Specimens **274–** 4
4.1 Size and Preparation **274–** 4
4.2 Conditioning **274–** 5

Chapter 5 Test Equipment and Instrumentation ... **274–** 5
5.1 Pipe Chase **274–** 5
5.2 Ignition Source **274–** 5
5.3 Canopy Hood and Exhaust Duct **274–** 6
5.4 Instrumentation in Exhaust Duct **274–** 6
5.5 Sampling Line **274–** 7
5.6 Gas Sampling and Analysis Equipment **274–** 7
5.7 Smoke Density Measuring Instruments **274–** 8
5.8 Data Acquisition **274–** 8
5.9 Photographic Equipment **274–** 8

Chapter 6 Calibration **274–** 8
6.1 Calibration of Equipment **274–** 8
6.2 Daily Calibration **274–** 8

Chapter 7 Test Procedure **274–** 9
7.1 Testing Procedure **274–** 9

Chapter 8 Calculations **274–** 9
8.1 Method of Calculation **274–** 9
8.2 Symbols **274–** 9
8.3 Calibration Constant Using Propane **274–** 9
8.4 Heat Release for Test Specimens **274–** 9
8.5 Smoke Obscuration **274–**10

Chapter 9 Report of Results **274–**10
9.1 Documentation **274–**10

Annex A Explanatory Material **274–**10

Annex B Commentary **274–**10

Annex C Heat Release Calculations Using Additional Gas Analysis **274–**11

Annex D Informational References (Reserved) ... **274–**12

Index **274–**13

Copyright National Fire Protection Association
Provided by IHS under license with NFPA
No reproduction or networking permitted without license from IHS
Not for Resale

NFPA 274

Standard

Test Method to Evaluate Fire Performance Characteristics of Pipe Insulation

2003 Edition

IMPORTANT NOTE: This NFPA document is made available for use subject to important notices and legal disclaimers. These notices and disclaimers appear in all publications containing this document and may be found under the heading "Important Notices and Disclaimers Concerning NFPA Documents." They can also be obtained on request from NFPA or viewed at www.nfpa.org/disclaimers.

NOTICE: An asterisk (*) following the number or letter designating a paragraph indicates that explanatory material on the paragraph can be found in Annex A.

Chapter 1 Administration

1.1* Scope. This standard describes a method for determining the heat release and the smoke generation of pipe insulation assemblies mounted on steel pipes in a full-scale pipe chase.

1.2 Purpose.

1.2.1 This is a test method for an examination of the complete insulation assembly, including elbows, in an actual configuration that is found in the end use application. This test method shall be used to ascertain the resulting fire performance characteristics of the insulation assembly when exposed to a standard flaming ignition source in a standard pipe chase.

1.2.2* The results from this procedure provide information that shall be permitted to be used as an aid in the selection of pipe insulation assemblies that provide less contribution of heat, flame, and smoke to fire scenarios. The configuration and flame exposure that the specimens incur during the test produce results that clearly differentiate between products.

1.3 Application.

1.3.1* This test procedure shall be used to determine performance of pipe insulation assemblies exposed to a flaming ignition source.

1.3.2 The specimens shall include any jackets, elbows, tapes, sealants, coatings, adhesives, or other accessories used with the insulation in practice.

1.3.3* The test shall determine the potential extent to which the pipe insulation assemblies contribute to fire growth and the potential for fire spread under the particular conditions simulated.

1.3.4 Full-size specimens of pipe insulation assemblies shall be enclosed in a pipe chase and exposed to a gas burner ignition source.

1.3.5 During the test, the gas burner shall be set at an output level of 20 kW for the first 3 minutes and subsequently 70 kW for an additional 7 minutes.

1.3.6* Measurements shall be made of heat release and smoke density.

1.3.7 The total heat released, peak rate of heat release, and the total smoke released shall be determined from the heat release and smoke density measurements respectively.

1.3.8 Observations shall be taken during the test of flame spread out the top of the chase and other visual events.

1.3.9 Posttest observations of the condition of the specimens shall be recorded.

1.4 Units and Formulas.

1.4.1 SI Units. Metric units of measurement in this standard are in accordance with the modernized metric system known as the International System of Units (SI).

1.4.2 Primary Values. The SI value for a measurement and the equivalent inch-pound value given in parentheses shall each be acceptable for use as primary units for satisfying the requirements of this standard.

Chapter 2 Referenced Publications (Reserved)

Chapter 3 Definitions

3.1 General. The definitions contained in this chapter shall apply to the terms used in this standard. Where terms are not included, common usage of the terms shall apply.

3.2 NFPA Official Definitions.

3.2.1 Shall. Indicates a mandatory requirement.

3.2.2 Should. Indicates a recommendation or that which is advised but not required.

3.2.3 Standard. A document, the main text of which contains only mandatory provisions using the word "shall" to indicate requirements and which is in a form generally suitable for mandatory reference by another standard or code or for adoption into law. Nonmandatory provisions shall be located in an appendix or annex, footnote, or fine-print note and are not to be considered a part of the requirements of a standard.

3.3 General Definitions. (Reserved)

Chapter 4 Test Specimens

4.1 Size and Preparation.

4.1.1 The test specimen shall consist of the actual pipe insulation assemblies, including elbows, jackets, lagging, tapes, sealants, coatings, and adhesives, mounted on three DN 60 metric size or 2 in. nominal pipe size steel pipes.

4.1.2 The three steel pipes shall be L shaped, each with a vertical and horizontal section joined (by welding) with a short radius welded elbow of the same diameter.

4.1.2.1 The horizontal section of the welded pipe, including the elbow, shall be 1120 mm ± 13 mm (44 in. ± ½ in.) long and the vertical section including the elbow shall be 1650 mm ± 13 mm (65 in. ± ½ in.).

4.1.2.2 Each pipe shall have a cap screwed to its upper end with a hole through which a threaded eyebolt has been fastened.

Copyright National Fire Protection Association
Provided by IHS under license with NFPA
No reproduction or networking permitted without license from IHS
Not for Resale

4.1.2.3 The eyebolt shall be opened to form a hook so that the pipe can be hung on the rod across the top of the chase.

4.1.3 The L-shaped steel pipes shall be covered with insulation assemblies.

4.1.3.1 The vertical section of the insulation assembly shall be a minimum of 1520 mm (60 in.) from its top to the top of the horizontal section of the assembly.

4.1.3.2 The horizontal section shall be a minimum of 760 mm (30 in.) from the front of the chase to the vertical section.

4.1.3.3 As an alternative to 4.1.3.1 and 4.1.3.2, the vertical section of the insulation assembly shall be a minimum of 1525 mm (60 in.), and the horizontal section shall be a minimum of 760 mm (30 in.) in addition to the elbow or miter at the elbow.

4.1.4 The pipes shall be positioned in the chase with the middle pipe centered in the width of the chase and the three pipes 165 mm ± 3 mm (6½ in. ± ⅛ in.) apart, measured centerline to centerline.

4.1.4.1 The pipes shall be centered front to back in the vertical portion of the chase and their horizontal centerline 150 mm ± 13 mm (6 in. ± ½ in.) below the top of the horizontal portion of the interior of the chase.

4.2 Conditioning.

4.2.1 The test specimen shall be conditioned for at least 48 hours prior to testing at 23°C ± 3°C (73°F ± 5°F) and at relative humidity of 50 percent ± 5 percent.

4.2.2 Test specimens shall be tested within 20 minutes of removal from such conditions if the test conditions differ from those specified in this section.

Chapter 5 Test Equipment and Instrumentation

5.1 Pipe Chase.

5.1.1 The chase shall be made of 1.37 mm [0.054 in. (16 gauge)] steel lined with nominal 13 mm (0.5 in.) thick calcium silicate board and stiffened with angle or bar stock.

5.1.2 The overall height inside the chase shall be 2030 mm ± 13 mm (80 in. ± ½ in.), and the width shall be 610 mm ± 13 mm (24 in. ± ½ in.).

5.1.3 The vertical section shall be 460 mm ± 13 mm (18 in. ± ½ in.) deep, while the horizontal section shall be 460 mm ± 13 mm (18 in. ± ½ in.) high and 1220 mm ± 13 mm (48 in. ± ½ in.) deep, as shown in Figure 5.1.3.

5.1.4 Specimens mounted on steel pipes shall be hung from a 27 mm (1 1/16 in.) diameter steel rod centered across the top of the vertical chase.

5.1.5 A pan to capture any dripping and falling materials shall be made to fit in the bottom of the chase.

5.1.6 The pan shall be made of tinned steel flashing material 710 mm (28 in.) wide and 1220 mm (48 in.) long.

5.1.7 Approximately 2 in. of either side of the 1220-mm (48-in.) length and one end shall be bent 90 degrees to form the sides of the pan that will fit into the bottom of the chase.

5.1.8 The open side of the pan shall face outward.

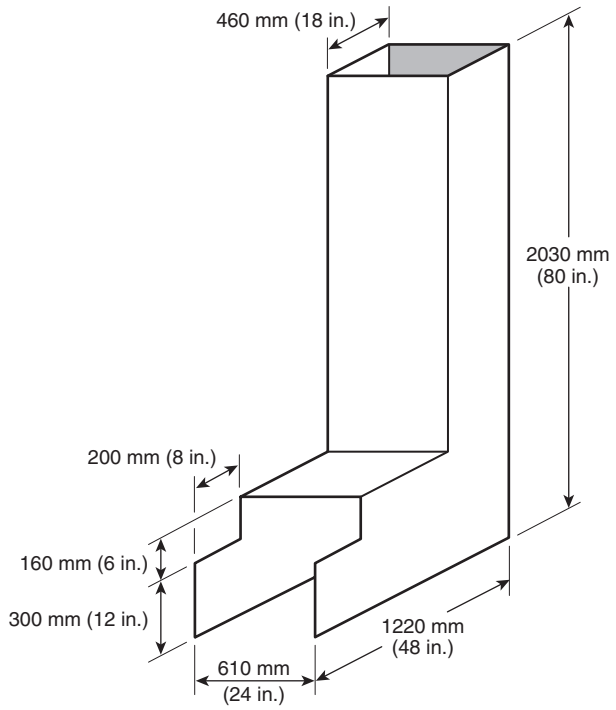

FIGURE 5.1.3 Pipe Chase Interior Dimensions.

5.1.9 Heavy metal tape shall be used to cover any gaps between the pan and the walls of the chase.

5.1.10 The pan shall be replaced following any test after which material adheres to the pan.

5.2 Ignition Source.

5.2.1 The ignition source for the test shall be a gas burner with nominal dimensions of 305 mm × 305 mm × 152 mm (12 in. × 12 in. × 6 in.), as shown in Figure 5.2.1.

5.2.2 A minimum 102 mm (4 in.) layer of sand shall be used to provide a horizontal surface through which the gas is supplied.

5.2.3 The top surface of the burner shall be located 50 mm (2 in.) below the specimens.

5.2.4 The burner enclosure shall be located such that the edge of the diffusion surface is equidistant from both walls of the lower chase and 380 mm (15 in.) from the front of the pipe chase, as shown in Figure 5.2.4.

5.2.5 The gas supply to the burner shall be of chemically pure (C.P.) grade propane (99 percent purity or better).

5.2.6 The burner shall be capable of producing a net heat output of 20 kW ± 1 kW for 3 minutes followed by a net heat output of 70 kW ± 4 kW for 7 minutes.

5.2.7 Flow rates shall be calculated using the net heat of combustion for propane of 85 MJ/m^3 at standard conditions of 20°C (68°F) temperature and 100 kPa (14.70 psia) pressure.

5.2.8 The gas flow rate shall be metered throughout the test, with an accuracy of within ±3 percent.

5.2.9 The heat output from the burner shall be controlled to within ±5 percent.

Copyright National Fire Protection Association
Provided by IHS under license with NFPA
No reproduction or networking permitted without license from IHS
Not for Resale

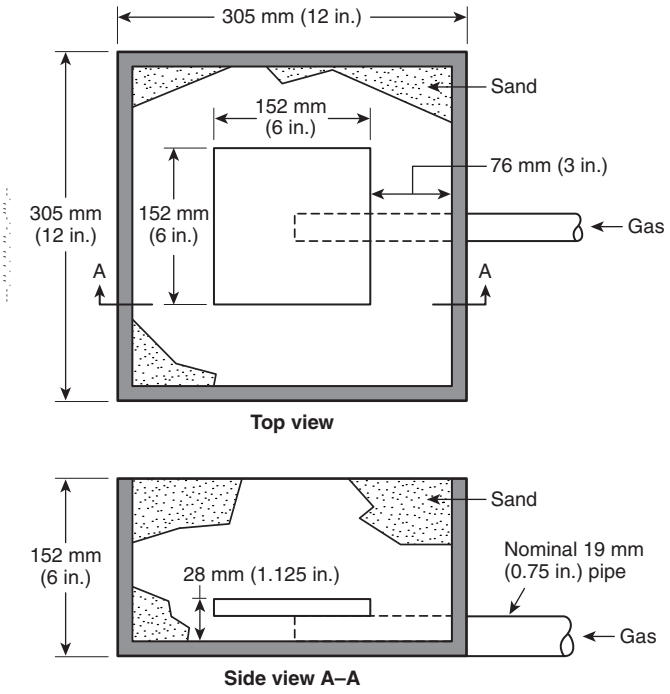

FIGURE 5.2.1 Gas Burner.

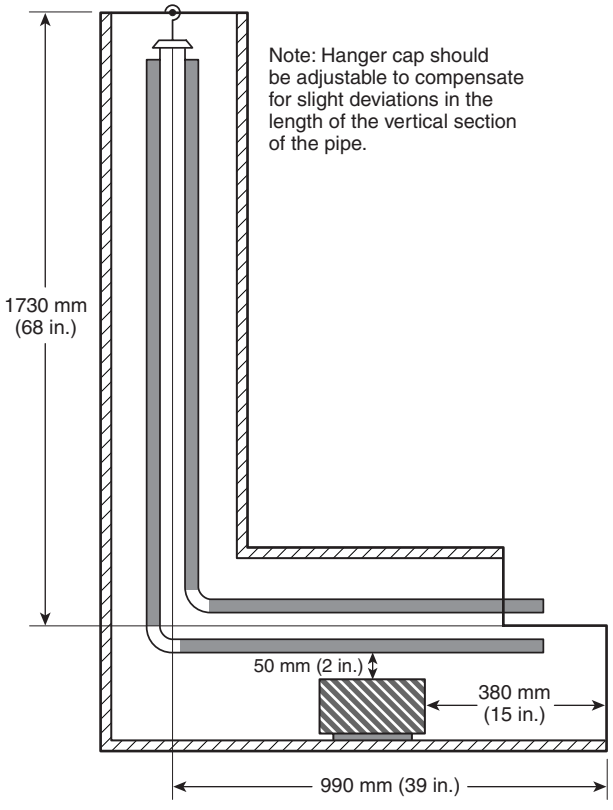

FIGURE 5.2.4 Cross Section of Chase with Pipe Insulation Assembly Installed.

5.2.10 The burner design shall allow switching from 20 kW to 70 kW within 10 seconds.

5.2.11 A pilot burner or a remotely controlled spark igniter shall ignite the burner.

5.2.12 Burner controls shall be provided for automatic gas supply shutoff if flameout occurs.

5.3 Canopy Hood and Exhaust Duct.

5.3.1 A hood shall be installed above the pipe chase, as shown in Figure 5.3.1.

5.3.1.1 The face dimensions of the hood shall be at least 2.44 m × 2.44 m (8 ft × 8 ft), and the depth shall be 1.1 m (3.6 ft).

5.3.1.2 The hood shall feed into a plenum having a 0.91 m × 0.91 m (3 ft × 3 ft) cross section.

5.3.1.3 The plenum shall be a minimum height of 0.91 m (3 ft).

5.3.1.4 The height given in 5.3.1.3 shall be permitted to be increased to a maximum of 1.8 m (6 ft) to satisfy building constraints.

5.3.1.5 The exhaust duct connected to the plenum shall be as follows:

(1) A diameter of 406 mm (16 in.)
(2) Horizontal
(3) Permitted to have a circular aperture of 305 mm (12 in.) at its entrance or mixing vanes in the duct

5.3.2 The hood shall have sufficient draft to collect all of the combustion products leaving the chase.

5.3.3 During the test, this draft shall be capable of moving up to 3.4 m^3/sec (7000 ft^3/min) equivalent to 7.6 m^3/sec (16,100 ft^3/min) at 399°C (750°F).

5.3.4 Provision shall be made so that the draft can operate at 0.47 to 3.4 m^3/sec (1000 to 7000 ft^3/min).

5.3.5 Mixing vanes shall be required in the duct if concentration gradients are found to exist.

5.3.6 An alternative exhaust system design shall be permitted to be used if it can be calibrated as required in Section 6.1 and Section 6.2 and it meets the performance requirements in 5.3.2.

5.4 Instrumentation in Exhaust Duct.

5.4.1 The exhaust collection system shall be constructed with the following requirements:

(1) A blower
(2) A steel hood
(3) A duct
(4) A bidirectional probe
(5) A thermocouple(s)
(6) An oxygen measurement system
(7) A smoke obscuration measurement system (white light photocell lamp/detector or laser)
(8) A combustion gas sampling and analysis system

5.4.2 A bidirectional probe or an equivalent measuring system shall be used to measure gas velocity in the duct.

5.4.3 A typical probe, shown in Figure 5.4.3, shall consist of a short, stainless steel cylinder that is 44 mm (1.75 in.) long and has a 22 mm (0.875 in.) inside diameter with a solid diaphragm in the center.

Copyright National Fire Protection Association
Provided by IHS under license with NFPA
No reproduction or networking permitted without license from IHS
Not for Resale

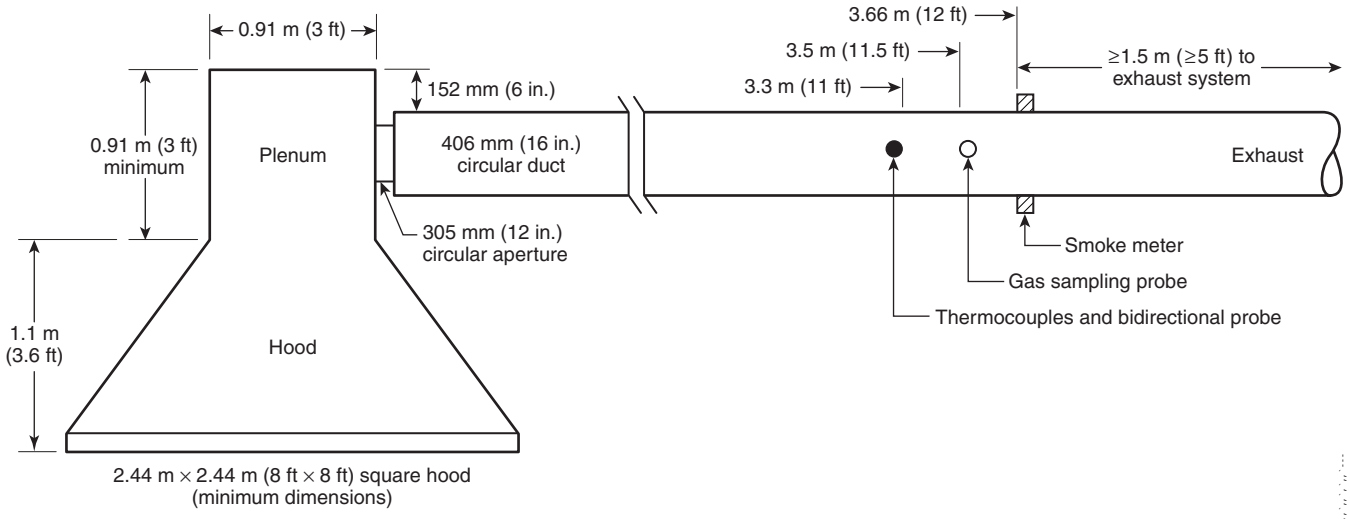

FIGURE 5.3.1 Canopy Hood and Exhaust Duct.

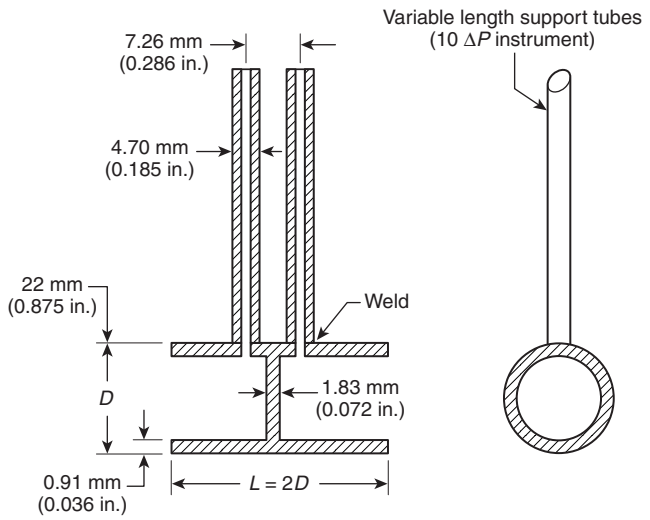

FIGURE 5.4.3 Bidirectional Probe.

5.4.4 The pressure taps on either side of the diaphragm shall support the probe.

5.4.5 The axis of the probe shall run along the centerline of the duct, 3.35 m (11 ft) downstream from the entrance.

5.4.6 The taps shall be connected to a pressure transducer that shall be able to resolve pressure differences of 0.25 Pa (0.001 in. H_2O).

5.4.7 One pair of thermocouples shall be placed 3.4 m (11 ft) downstream of the entrance to the horizontal duct.

5.4.8 The pair of thermocouples shall straddle the center of the duct.

5.4.9 The pair of thermocouples shall be separated 51 mm (2 in.) from each other.

5.5 Sampling Line.

5.5.1 The gas sampling tubes shall be constructed of a material that will not affect the concentration of the combustion gas species to be analyzed.

5.5.2 The following sequence of the gas train shall be used:

(1) Sampling probe
(2) Soot filter
(3) Cold trap
(4) Gas path pump
(5) Vent valve
(6) Drying column
(7) Flow controller
(8) Oxygen analyzer

5.5.3 The gas train shall also include spanning and zeroing facilities.

5.6 Gas Sampling and Analysis Equipment.

5.6.1 A stainless steel gas sampling tube shall be located at least 10 diameters downstream from the last turn in the duct to obtain a continuously flowing sample for determining the oxygen concentration of the exhaust gas as a function of time.

5.6.2 A filter and cold trap shall be placed in line ahead of the analyzer to remove particulates and water.

5.6.3 The oxygen analyzer shall be capable of measuring the oxygen concentration in a range of from 0 percent to 21 percent with an accuracy of ±0.2 percent of full-scale setting.

5.6.3.1 The signal from the oxygen analyzer shall attain 90 percent of the calibration value within 30 seconds after introducing a step change in composition of the gas stream flowing past the inlet to the sampling tube.

5.6.4 The carbon monoxide analyzer shall have a range of from 0 percent to 1.0 percent with an accuracy of ±0.02 percent of full scale.

5.6.4.1 The signal from the carbon monoxide analyzer shall attain 90 percent of the calibration value within 30 seconds of a step change in CO composition of the gas stream flowing past the inlet to the sampling tube.

Copyright National Fire Protection Association
Provided by IHS under license with NFPA
No reproduction or networking permitted without license from IHS
Not for Resale

5.6.5 The carbon dioxide analyzer shall have a range of from 0 percent to 10 percent with an accuracy of ±0.2 percent of full-scale setting.

5.6.5.1 The signal from the carbon dioxide analyzer shall attain 90 percent of the value within 30 seconds of a step change in CO_2 composition of the gas stream flowing past the inlet to the sampling tube.

5.7 Smoke Density Measuring Instruments.

5.7.1 The smoke density measuring system shall be a white light system or alternative system.

5.7.2 The lamp shall be of the incandescent filament type and shall operate at a color temperature of 2900 K ± 100 K.

5.7.2.1 The lamp shall be supplied with stabilized direct current, stable within ±0.2 percent, including temperature and short-term and long-term stability.

5.7.3 The lens system shall be selected such that the lens shall have a diameter, *d*, chosen with regard to the focal length, *f*, so that $d/f \leq 0.04$.

5.7.4 The aperture shall be placed in the focus of the lens.

5.7.5 The detector shall have a spectrally distributed response according to the CIE photopic curve.

5.7.5.1 The detector shall be linear within 5 percent over an output range of at least 3.5 decades.

5.7.5.2 The linearity of the detector shall be checked periodically with calibrated optical filters and shall cover the entire range of the instrument.

5.7.6 The system shall be mounted on the duct at a point where it will be preceded by a straight run of duct at least 12 diameters or 5.2 m (17 ft).

5.7.6.1 A photoelectric cell, whose output is directly proportional to the amount of light received, shall be mounted over the light source and connected to a recording device.

5.7.6.2 The recording device shall have an accuracy within ±1 percent of full scale for indicating changes in the attenuation of incident light resulting from the passage of smoke, particulate, and other effluents.

5.7.6.3 The distance between the light source lens and the photocell lens shall be 914 mm ± 102 mm (35.6 in. ± 3.9 in.).

5.7.6.4 The cylindrical light beam shall pass through 76 mm ± 3 mm (2.9 in. ± 0.12 in.) diameter openings at the top and bottom of the duct, with the resultant light beam centered on the photocell.

5.7.7 An alternate smoke density measuring system shall be permitted to be used if it has been shown to produce equivalent results.

5.8 Data Acquisition.

5.8.1 A digital data acquisition system shall be used to collect and record the following:

(1) Oxygen, carbon monoxide, and carbon dioxide analyzer measurements
(2) Pressure gauge measurements
(3) Temperatures
(4) Smoke measurements

5.8.2 The speed and capacity of the data system shall be sufficient to collect the data at a minimum of every 3 seconds.

5.9 Photographic Equipment. A pretest and posttest photographic record of the test specimen shall be made.

Chapter 6 Calibration

6.1 Calibration of Equipment.

6.1.1 The equipment and instrumentation shall be calibrated.

6.1.2 The heat release instrumentation shall be calibrated by burning propane.

6.1.3 The test burner described in Section 5.2 shall be used for calibration.

6.1.4 The gas supply to the burner shall be shall be of C.P. grade propane (99 percent purity or better.)

6.1.5 The flow rate of propane shall be metered and kept constant throughout the calibration test.

6.1.6 A heat release level of 300 kW shall be used for calibration.

6.1.7 The calibration burn shall be conducted for a period of 10 minutes.

6.1.8 A calibration constant, *C*, shall be obtained as described in Chapter 8.

6.1.8.1 A value for *C* differing more than 10 percent from the theoretical value shall not be permitted, and the equipment shall be checked.

6.1.8.2 For the exhaust duct configuration described in Section 5.3 and the velocity probe described in 5.4.2, *C* shall have a theoretical value of 2.8.

6.2 Daily Calibration.

6.2.1 Prior to the start of each day of testing, the equipment calibrations described in 6.2.2 through 6.2.6 shall be performed.

6.2.2 The oxygen analyzer shall be zeroed and spanned.

6.2.2.1 The analyzer shall be zeroed by introducing 100 percent nitrogen gas to the instrument at the same pressure and flow rate as set for the test specimen combustion gases.

6.2.2.2 The analyzer shall be spanned by introducing ambient duct air via the sample probe and adjusting the span to 20.95 percent oxygen.

6.2.2.3 The spanning and zeroing process shall continue until adjustment-free accuracy is obtained.

6.2.3 Following zeroing and spanning, linearity of the oxygen analyzer response curve shall be verified by introducing bottled gas of a known oxygen concentration to the analyzer.

6.2.3.1 The delay time of the analyzer shall be checked by introducing ambient duct air to the analyzer and noting the time at which the analyzer readings reach 90 percent of the final reading.

6.2.4 The CO analyzer and CO_2 analyzer shall be zeroed and spanned in the same manner as the oxygen analyzer.

6.2.4.1 The analyzers shall be zeroed by introducing 100 percent nitrogen gas to the instrument at the same pressure and flow rate as set for the test specimen combustion gases.

Copyright National Fire Protection Association
Provided by IHS under license with NFPA
No reproduction or networking permitted without license from IHS
Not for Resale

6.2.4.2 The analyzers shall be spanned by feeding each analyzer with bottled gas containing the selected concentration of span gas and adjusting for the response range of each analyzer.

6.2.5 The delay time of each analyzer shall be determined.

6.2.5.1 The delay time shall be measured by introducing either a calibration span gas (for CO and CO_2) or a zero gas (for O_2) at the sample line just outside the duct and noting the time at which the analyzer readings reach 90 percent of the final reading.

6.2.6 Linearity of the smoke density measuring system shall be verified by interrupting the light beam with multiple calibrated neutral density filters to cover the range of the recording instrument.

6.2.7 Transmittance values measured by the photometer, using neutral density filters, shall be within ±3 percent of the calibrated value for each filter.

Chapter 7 Test Procedure

7.1 Testing Procedure.

7.1.1 The test specimens shall be installed at equal intervals across the chase.

7.1.2 The initial exhaust hood flow rate shall be set at a rate determined to produce accurate measurements during calibration of the exhaust system and shall be adequate for the expected fire size.

7.1.3 The burner shall be positioned 380 mm ± 5 mm (15 in. ± 0.20 in.) from the front of the chase and centered side to side in the horizontal section of the pipe chase.

7.1.4 The data acquisition shall begin in order to record test instrumentation signals.

7.1.5 The burner shall be ignited and the flow rate shall be adjusted to provide a burner output of 20 kW ± 1 kW.

7.1.6 The 20 kW flow shall continue for 3 minutes.

7.1.7 Within 10 seconds following the 3-minute exposure, the gas flow shall be increased in order to provide a 70 kW exposure for an additional 7 minutes.

7.1.8 After 10 minutes, the burner shall be turned off.

7.1.9 The posttest condition of the insulation system shall be recorded photographically and with written observations.

Chapter 8 Calculations

8.1 Method of Calculation.

8.1.1 The symbols used in this chapter shall be defined as in Section 8.2 and Annex C.

8.1.2 The equations in this chapter shall use oxygen measurement only.

8.1.3 Equations that use O_2, CO_2, CO, and water vapor shall be provided in Annex C.

8.1.4 If a CO_2 analyzer is used and CO_2 is not removed from the oxygen sampling lines, then the appropriate equations in Annex C shall be used.

8.2 Symbols. The following symbols shall be used in this chapter:

C = calibration constant using propane ($m^{1/2}kg^{1/2}K^{1/2}$)
$\Delta H_c/r_0$ = net heat released per kg of O_2 consumed (kJ/kg), where ΔH_c equals net heat of combustion (kJ/kg) and r_0 equals stoichiometeric oxygen/fuel mass ratio
I = light intensity
I_0 = light intensity with no smoke
k = extinction coefficient (m^{-1})
l = path length (m)
ΔP = bidirectional probe pressure differential (Pa)
$\dot{q}$ = heat release rate (kW)
t = time (sec)
t_d = oxygen analyzer delay time (sec)
T_g = absolute temperature of gas at the orifice meter (K)
SRR = smoke release rate (m^2/sec)
THR = total heat released during the test
TSR = total smoke released (m^2)
v = volume flow rate (m^3/sec)
$\dot{X}_{O_2}$ = oxygen analyzer reading, mole fraction O_2
$\dot{X}^0_{O_2}$ = initial value of oxygen analyzer reading
$\dot{X}^1_{O_2}$ = oxygen analyzer reading, before delay time correction

8.3 Calibration Constant Using Propane.

8.3.1 The calibration constant shall be obtained from the following equation:

$$C = \left[\frac{170}{1.10\left(12.77\times10^3\right)}\right]\left(\sqrt{\frac{T_e}{\Delta P}}\right)\left(\frac{1.084-1.4\dot{X}_{O_2}}{\dot{X}^0_{O_2}-\dot{X}_{O_2}}\right)$$

8.3.2 In the equation given in 8.3.1, 170 shall correspond to 170 kW propane supplied, 12.77×10^3 shall equal $\Delta H_c/r_0$ for propane, and 1.10 shall be the ratio of oxygen to air molecular weight.

8.4 Heat Release for Test Specimens.

8.4.1 Prior to performing additional calculations, the oxygen analyzer time shift shall be determined by the following equation:

$$\dot{X}_{O_2}(t) = \dot{X}^1_{O_2}(t - t_d)$$

8.4.2 The heat release rate then shall be determined by the following equation:

$$\dot{q}(t) = \left(\frac{\Delta H_c}{r_0}\right)1.10C\left(\sqrt{\frac{\Delta P}{T_g}}\right)\left(\frac{\dot{X}^0_{O_2}-\dot{X}_{O_2}(t)}{1.084-1.4\dot{X}_{O_2}(t)}\right)$$

Copyright National Fire Protection Association
Provided by IHS under license with NFPA
No reproduction or networking permitted without license from IHS
Not for Resale

8.4.3 The value of $(\Delta H_c/r_0)$ for the test specimen shall be set to equal 13.1×10^3 kJ/kg unless a more accurate value is known for the test specimen.

8.4.4 The total heat released during the 10-minute (600-second) test shall be determined by the following equation:

$$\text{THR} = \sum_{i=0}^{600} \dot{q}_i(t)\Delta t$$

8.5 Smoke Obscuration.

8.5.1 The extinction coefficient *(k)* of smoke shall be determined by the following equation:

$$k = \frac{1}{L}\ln\left(\frac{I_0}{I}\right)$$

8.5.2 The smoke release rate (SRR) shall be calculated using the optical density per linear path length and the volumetric flow rate in the duct.

8.5.2.1 The SRR shall be determined by the following equation:

$$\text{SRR} = kv$$

8.5.2.2 In this equation, SRR shall equal the smoke release rate in m^2/sec, k shall equal the extinction coefficient, and v shall equal the volumetric flow rate in m^3/sec referred to 298 K.

8.5.3 Total smoke released shall be defined by the following equation:

$$\text{TSR} = \int \text{SRR}\ dt$$

Chapter 9 Report of Results

9.1 Documentation. The following shall be reported for each test specimen:

(1) Test specimen identification or number
(2) Manufacturer or submitter
(3) Date of test
(4) Operator
(5) Composition or generic identification of all components of the insulation assembly
(6) Details of preparation including the location and treatment of each component in the assembly
(7) Measured outside diameter and inside diameter of the pipe insulation
(8) Number of replicate test specimens tested
(9) Peak rate of heat release (kW)
(10) Time to peak rate of heat release (seconds)
(11) Total heat released during the 10-minute test (THR)
(12) Plot of the heat release over time
(13) Total smoke released during the 10-minute test (TSR)
(14) Plot of the smoke generation over time
(15) Pretest photographic record of test specimen
(16) Written record of any flameout at the top of the chase
(17) Written record of dripping or other visual observations
(18) Posttest photographic record of test specimen

Annex A Explanatory Material

Annex A is not a part of the requirements of this NFPA document but is included for informational purposes only. This annex contains explanatory material, numbered to correspond with the applicable text paragraphs.

A.1.1 The results of the test are intended to be applicable in determining the acceptability of pipe insulation systems. Heat release rate is indicated by measurement of oxygen depletion, and smoke generation is determined by smoke density measurement.

A.1.2.2 Heat and smoke release rate measurements are sources of useful information for the regulation of materials in buildings and product development. They provide a quantitative measure of specific changes in fire performance caused by product modifications.

A.1.3.1 The purpose of this test is to examine insulation products as complete systems and to differentiate between products with a flame spread and fire scenario to which other test methods are not always sensitive. This test ignites materials that might otherwise melt away from the ignition source. In the vertical over horizontal chase configuration used by this test, ignition can occur in the horizontal section before the material in the vertical section melts from the pipes, and if there is sufficient heat from the horizontal section the vertical material will also burn.

A.1.3.3 Insulation systems producing fires of a few kilowatts to greater than 1 megawatt have been measured in this apparatus. It is believed that because the vertical section is on top of the horizontal section this apparatus is well ventilated. The buoyant heated gases move through the vertical section more readily than a configuration with a long horizontal section on top of a shorter vertical section.

A.1.3.6 An ignition source that will ignite a variety of insulation materials and allow differentiation of the fire performance of these materials was sought for this test. Experiments utilizing equipment similar to the pipe chase in this method were performed using a 1.81 kg (4 lb) crib made of nominal 25 mm (1 in.) thick pine lumber. The 20 kW to 70 kW gas burner roughly approximates the heat release from the 1.81 kg (4 lb) wood crib. This size ignition source was large enough to ignite all the insulation materials examined without completely consuming every type of material.

Annex B Commentary

This annex is not a part of the requirements of this NFPA document but is included for informational purposes only.

B.1 Measurement Section Instrumentation.

B.1.1 The locations for velocity, temperature, gas analysis, and smoke photometer should be chosen to ensure that the products of combustion are well mixed and not stratified at the sampling location. The general rule should be for the duct to run a sufficient length (10 diameters) downstream from the last turn in the duct prior to location of instrumentation in order to provide for a fully developed gas flow. Mixing vanes should be used in the duct if concentration gradients are found to exist.

B.1.2 A laser beam system can be permitted to be used as an alternate system for measuring smoke obscuration.

Copyright National Fire Protection Association
Provided by IHS under license with NFPA
No reproduction or networking permitted without license from IHS
Not for Resale

B.2 Mounting.

B.2.1 Three pipes are used to provide a configuration where radiation and reradiation can occur between burning specimens, the center specimen potentially receiving energy on two sides. The recommended spacing between the installed insulation assemblies of 50 mm ± 13 mm (2 in. ± ½ in.) is a distance believed to produce significant radiation between the pipes and yet allow enough space for easy installation.

B.2.2 Specimens of alternative size could be tested with this method on different diameter pipes if it is not possible to manufacture material in the standard size required. The spacing between the insulation assemblies should remain 50 mm ± 13 mm (2 in. ± ½ in.). Any deviation from the standard should be noted in the report.

B.3 Conditions of Acceptance.

B.3.1 The performance of the pipe insulation assembly should be judged on the basis of data obtained during the test.

B.3.2 The acceptance should be valid for the pipe insulation assembly tested including the actual thickness and all accessories used in the assembly.

B.3.3 Assemblies should be considered to have acceptable performance if B.3.4 through B.3.7 are all met during the 10-minute test.

B.3.4 Peak rate of heat release should be 300 kW or less.

B.3.5 Total heat released at 10 min (THR_{600}) should be 50 MJ or less.

B.3.6 Total smoke release (TSR_{600}) should be 500 m^2 or less.

B.3.7 Flames should not extend 0.3 m (1 ft) or more above the top of the vertical portion of the apparatus at any time during the test.

Annex C Heat Release Calculations Using Additional Gas Analysis

This annex is not a part of the requirements of this NFPA document but is included for informational purposes only.

C.1 Calculation of Heat Release with Additional Gas Analysis.

C.1.1 The equations used to calculate heat release rate in Chapter 8 assume that CO_2 is removed from the gas sample in a chemical scrubber before oxygen is measured. Some laboratories are equipped to measure CO_2; in such a case, it is not necessary to remove the CO_2 from the oxygen line. The advantage is that the chemical scrubbing agent, which is costly and needs careful handling, can be avoided.

C.1.2 In this annex, equations are provided that should be used when CO_2 is measured but not scrubbed out of the sampling lines. Two cases are considered. In the first case, part of the dried and filtered sample stream is diverted into infrared CO_2 and CO analyzers. In the second case, a water-vapor analyzer is also added. To avoid condensation, when measuring water-vapor concentration in the flow of combustion products, a separate sampling system with heated filters, heated sampling lines, and a heated analyzer is needed.

C.2 Symbols. The following symbols are used in this annex (in addition to those in Section 8.2):

$\Delta H_c / r_0$ = net heat released per kg of O_2 consumed kJ/kg, where ΔH_c equals net heat of combustion kJ/kg and r_0 equals stoichiometric oxygen/fuel mass ratio
M_a = molecular weight of air (kg/kmol)
M_e = molecular weight of the combustion products (kg/kmol)
$\dot{m}_e$ = exhaust duct mass flow rate (kg/sec)
t_d^1 = time delay of the CO_2 analyzer (seconds)
t_d^2 = time delay of the CO analyzer (seconds)
t_d^3 = time delay of the water vapor analyzer (seconds)
$\dot{X}^0_{CO_2}$ = initial CO_2 reading, mole fraction
$\dot{X}^0_{CO}$ = initial CO reading, mole fraction
$\dot{X}^0_{H_2O}$ = initial water-vapor reading, mole fraction
$\dot{X}^a_{O_2}$ = ambient oxygen mole fraction (mol/mol)
$\dot{X}^1_{CO_2}$ = CO_2 reading before delay time correction, mole fraction
$\dot{X}^1_{CO}$ = CO reading before delay time correction, mole fraction
$\dot{X}^1_{H_2O}$ = water vapor reading before delay time correction, mole fraction
$\dot{X}_{CO_2}$ = CO_2 reading after delay time correction, mole fraction
$\dot{X}_{CO}$ = CO reading after delay time correction, mole fraction
$\dot{X}_{H_2O}$ = water reading after delay time correction, mole fraction
ϕ = oxygen depletion factor

C.3 Where CO_2 and CO Are Measured.

C.3.1 As in the case of the oxygen analyzer, measurements of CO_2 and CO should be time-shifted to take transport time in the sampling lines into account as follows:

$$\dot{X}_{O_2}(t) = \dot{X}^1_{O_2}\left(t + t_d\right)$$
$$\dot{X}_{CO_2}(t) = \dot{X}^1_{CO_2}\left(t + t^1_d\right)$$
$$\dot{X}_{CO}(t) = \dot{X}^1_{CO}\left(t + t^2_d\right)$$

The delay times for the CO_2 and CO analyzers are usually different (smaller) than the delay time for the oxygen (O_2) analyzer.

C.3.2 The exhaust duct flow is determined as follows:

$$\dot{m}_e = C\sqrt{\frac{\Delta P}{T_e}}$$

C.3.3 The rate of heat release now can be determined as follows:

$$\dot{q} = 1.10\left(\frac{\Delta H_c}{r_0}\right)\dot{X}^a_{O_2}\left[\frac{\phi - 0.172(1-\phi)\dfrac{\dot{X}_{CO}}{\dot{X}_{O_2}}}{(1-\phi)+1.084\phi}\right]\dot{m}_e$$

--`,,,-`-`,,`,,`,`,,`---
Copyright National Fire Protection Association
Provided by IHS under license with NFPA
No reproduction or networking permitted without license from IHS
Not for Resale

C.3.4 The oxygen depletion factor is calculated as follows:

$$\phi = \frac{\dot{X}^0_{O_2}\left(1-\dot{X}_{CO_2}-\dot{X}_{CO}\right)-\dot{X}_{O_2}\left(1-\dot{X}^0_{CO_2}\right)}{\dot{X}^0_{O_2}\left(1-\dot{X}_{CO_2}-\dot{X}_{CO}-\dot{X}_{O_2}\right)}$$

C.3.5 The ambient mole fraction of oxygen (O_2) is determined as follows:

$$\dot{X}^a_{O_2} = \left(1-\dot{X}^0_{H_2O}\right)\left(\dot{X}^0_{O_2}\right)$$

C.3.6 The second value in the numerator of the factor in brackets in the equation in C.3.3 is a correction factor for incomplete combustion of some carbon to CO instead of CO_2. In fact, $\dot{X}_{CO}$ is usually very small, so that it can be disregarded in the equations in C.3.3 and C.3.4. The practical implication of this value is that a CO analyzer will generally not result in a noticeable increase in accuracy of heat release rate measurements. Consequently, the equations in C.3.3 and C.3.4 can be permitted to be used even if no CO analyzer is present by using the setting $\dot{X}_{CO} = 0$.

C.4 Where Water Vapor Is Also Measured.

C.4.1 In an open combustion system, such as that used in this test method, the flow rate of air entering the system cannot be measured directly but is inferred from the flow rate measured in the exhaust duct. An assumption regarding the expansion due to combustion of the fraction of the air that is fully depleted of its oxygen is necessary. This expansion depends on the composition of the fuel and the actual stoichiometry of the combustion. A suitable average value for the volumetric expansion factor is 1.084, which is the factor for propane.

C.4.2 This expansion factor value is already incorporated within the equation in 8.4.2 and the equation in C.3.3. It can be assumed that the exhaust gases consist primarily of nitrogen, oxygen, CO_2, water vapor, and CO; thus, measurements of these gases can be used to determine the actual expansion. (It is assumed that the measurements of oxygen, CO_2, and CO refer to a dry gas stream, while the water vapor measurement corresponds to total stream flow.) The mass flow rate in the exhaust duct is then more accurately determined by the following equation:

$$\dot{m}_e = C\sqrt{\frac{\Delta P}{T_e}\sqrt{\frac{M_e}{M_a}}}$$

C.4.2.1 The molecular weight, M_e, of the exhaust gases is determined as follows:

$$M_e = \left[4.5+\left(1-\dot{X}_{H_2O}\right)\left(2.5+\dot{X}_{O_2}+4\dot{X}_{CO_2}\right)\right]4$$

C.4.2.2 Using 28.97 as the value for M_a, the heat release rate is determined as follows:

$$\dot{q}(t) = 1.10\left(\frac{\Delta H_c}{r_0}\right)\left(1-\dot{X}_{H_2O}\right)\left[\frac{\dot{X}^0_{O_2}\left(1-\dot{X}_{O_2}-\dot{X}_{CO_2}\right)}{1-\dot{X}^0_{O_2}-\dot{X}^0_{CO_2}}-X_{O_2}\right]\dot{m}_e$$

C.4.3 The water vapor readings used in the equation in C.4.2.2 are time-shifted in a similar way to those in the equations in C.3.1 for the other types of analyzers as follows:

$$\dot{X}^0_{H_2O}(t) = \dot{X}^1_{H_2O}\left(t-t^3_d\right)$$

Annex D Informational References (Reserved)

Copyright National Fire Protection Association
Provided by IHS under license with NFPA
No reproduction or networking permitted without license from IHS
Not for Resale

Index

© 2003 National Fire Protection Association. All Rights Reserved.

The copyright in this index is separate and distinct from the copyright in the document that it indexes. The licensing provisions set forth for the document are not applicable to this index. This index may not be reproduced in whole or in part by any means without the express written permission of NFPA.

-A-

Acceptance, conditions of B.3
Application of standard 1.3, A.1.3

-B-

Bidirectional probe ..... 5.4.1(5), 5.4.2, Fig. 5.4.3

-C-

Calculations ..... Chap. 8
Calibration constant using propane 8.3
Heat release calculations using additional gas analysis ... Annex C
Heat release for test specimens 8.4
Method of 8.1
Smoke obscuration 8.5
Symbols 8.2, C.2
Calibration ..... Chap. 6
Constant using propane ..... 6.1.2 to 6.1.8, 8.3
Daily calibration 6.2
Of equipment 6.1
Canopy hood ..... 5.3, Fig. 5.3.1, 5.4.1(2), 7.1.2
Carbon dioxide, measurement of ..... 5.6.5, 6.2.4, 6.2.5, 8.1.4, Annex C
Carbon monoxide, measurement of ..... 5.6.4, 6.2.4, 6.2.5, Annex C

-D-

Data acquisition 5.8, 7.1.4
Definitions ..... Chap. 3
Documentation 9.1

-E-

Exhaust duct ..... 5.3.1.5, Fig. 5.3.1, 5.3.5, 5.3.6, 5.4, 6.1.8.2, B.1.1

-G-

Gas sampling and analysis equipment ..... 5.4.1(8), 5.6, B.1.1; *see also* Oxygen, measurement of
Calibration ..... 6.2.2 to 6.2.5
Heat release calculations using additional gas analysis ... Annex C
Sampling line 5.5
Gas train 5.5.3

-H-

Heat release
Calculations using additional gas analysis ..... Annex C
For test specimens ..... 8.4, 9.1(9) to 9.1(12), B.3.4, B.3.5

-I-

Ignition source 5.2

-M-

Measurement, units of 1.4

-O-

Oxygen, measurement of ..... 5.4.1(6), 5.5.2(8), 5.6.3, 6.2.2, 6.2.3, 6.2.5, Chap. 8, Annex C

-P-

Photographic equipment 5.9
Pipe chase 5.1
Purpose of standard 1.2, A.1.2.2

-R-

References ..... Chap. 2, Annex D
Report of results ..... Chap. 9

-S-

Scope of standard 1.1, A.1.1
Shall (definition) 3.2.1
Should (definition) 3.2.2
SI units 1.4
Smoke density measuring instruments 5.7, 6.2.6, 6.2.7, B.1.1
Smoke obscuration ..... 5.4.1(7), 8.5, 9.1(13), 9.1(14), B.1.2
Smoke release rate (SRR) ..... 8.5.2, 8.5.3, 9.1(13), B.3.6
Standard (definition) 3.2.3

-T-

Test equipment and instrumentation ..... Chap. 5, B.1
Calibration ..... *see* Calibration
Canopy hood and exhaust duct 5.3, 5.4, B.1.1
Data acquisition 5.8
Gas sampling and analysis equipment 5.5, 5.6, B.1.1
Ignition source 5.2
Photographic equipment 5.9
Pipe chase 5.1
Sampling line 5.5
Smoke density measuring instruments 5.7, B.1.1, B.1.2
Test procedure ..... Chap. 7
Test specimens ..... Chap. 4
Conditioning 4.2
Heat release for 8.4, B.3.4, B.3.5
Mounting 4.1.1, 5.1.4, B.2
Size and preparation 4.1
Smoke release, total B.3.6

-U-

Units of measurement 1.4

-W-

Water vapor, measurement of C.4

Copyright National Fire Protection Association
Provided by IHS under license with NFPA
No reproduction or networking permitted without license from IHS
Not for Resale

Sequence of Events Leading to Publication of an NFPA Committee Document

Call goes out for proposals to amend existing document or for recommendations on new document.

▼

Committee meets to act on proposals, to develop its own proposals, and to prepare its report.

▼

Committee votes on proposals by letter ballot. If two-thirds approve, report goes forward. Lacking two-thirds approval, report returns to committee.

▼

Report — *Report on Proposals* (ROP) — is published for public review and comment.

▼

Committee meets to act on each public comment received.

▼

Committee votes on comments by letter ballot. If two-thirds approve, supplementary report goes forward. Lacking two-thirds approval, supplementary report returns to committee.

▼

Supplementary report — *Report on Comments* (ROC) — is published for public review.

▼

NFPA membership meets (Annual or Fall Meeting) and acts on committee report (ROP or ROC).

▼

Committee votes on any amendments to report approved at NFPA Annual or Fall Meeting.

▼

Appeals to Standards Council on Association action must be filed within 20 days of the NFPA Annual or Fall Meeting.

▼

Standards Council decides, based on all evidence, whether or not to issue standard or to take other action, including upholding any appeals.

Committee Membership Classifications

The following classifications apply to Technical Committee members and represent their principal interest in the activity of the committee.

M *Manufacturer:* A representative of a maker or marketer of a product, assembly, or system, or portion thereof, that is affected by the standard.

U *User:* A representative of an entity that is subject to the provisions of the standard or that voluntarily uses the standard.

I/M *Installer/Maintainer:* A representative of an entity that is in the business of installing or maintaining a product, assembly, or system affected by the standard.

L *Labor:* A labor representative or employee concerned with safety in the workplace.

R/T *Applied Research/Testing Laboratory:* A representative of an independent testing laboratory or independent applied research organization that promulgates and/or enforces standards.

E *Enforcing Authority:* A representative of an agency or an organization that promulgates and/or enforces standards.

I *Insurance:* A representative of an insurance company, broker, agent, bureau, or inspection agency.

C *Consumer:* A person who is, or represents, the ultimate purchaser of a product, system, or service affected by the standard, but who is not included in the *User* classification.

SE *Special Expert:* A person not representing any of the previous classifications, but who has a special expertise in the scope of the standard or portion thereof.

NOTES:

1. "Standard" connotes code, standard, recommended practice, or guide.
2. A representative includes an employee.
3. While these classifications will be used by the Standards Council to achieve a balance for Technical Committees, the Standards Council may determine that new classifications of members or unique interests need representation in order to foster the best possible committee deliberations on any project. In this connection, the Standards Council may make such appointments as it seems appropriate in the public interest, such as the classification of "Utilities" in the National Electrical Code Committee.
4. Representatives of subsidiaries of any group are generally considered to have the same classification as the parent organization.

Copyright National Fire Protection Association
Provided by IHS under license with NFPA
No reproduction or networking permitted without license from IHS
Not for Resale

NFPA Technical Committee Document Proposal Form

Note: All proposals must be received by 5:00 p.m. EST/EDST on the published proposal closing date.

For further information on the standards-making process, please contact Codes and Standards Administration at 617-984-7249. For technical assistance, please call NFPA at 617-770-3000.

FOR OFFICE USE ONLY
Log #: _____
Date Rec'd: _____

Please indicate in which format you wish to receive your ROP/ROC: ☐ **CD ROM** ☐ **paper** ☐ **download**
(Note: In choosing the download option you intend to view the ROP/ROC from our Website. No copy will be sent to you.)

Date 12/18/02 **Name** John B. Smith **Telephone** 617-555-1212
Company _____
Address 9 Seattle St. **City** Seattle **State** WA **Zip** 02255
Please indicate organization represented (if any) Fire Marshals Assn. of North America

1. **a) NFPA Document Title** National Fire Alarm Code
   b) NFPA No. & Edition NFPA 72, 2002 ed. **c) Section/Paragraph** 4.4.7.1.1

2. **Proposal Recommends:** *(check one)* ☐ **new text** ☐ **revised text** ☒ **deleted text**

3. **Proposal.** *(Include proposed new or revised wording, or identification of wording to be deleted.)* Note: Proposed text should be in legislative format, that is, use underscore to denote wording to be inserted (inserted wording) and strike-through to denote wording to be deleted (~~deleted wording~~). Delete exception.

4. **Statement of Problem and Substantiation for Proposal.** Note: State the problem that will be resolved by your recommendation. Give the specific reason for your proposal including copies of tests, research papers, fire experience, etc. If more than 200 words, it may be abstracted for publication. A properly installed and maintained system should be free of ground faults. The occurrence of one or more ground faults should be required to cause a "trouble" signal because it indicates a condition that could contribute to future malfunction of the system. Ground fault protection has been widely available on these systems for years and its cost is negligible. Requiring it on all systems will promote better installations, maintenance and reliability.

5. ☒ **This Proposal is Original Material.** Note: Original material is considered to be the submitter's own idea based on or as a result of his/her own experience, thought, or research and, to the best of his/her knowledge, is not copied from another source.

   ☐ **This Proposal is Not Original Material; Its Source** ***(if known)*** **is as Follows:** _____

Sample

I hereby grant the NFPA all and full rights in copyright to this proposal, and I understand that I acquire no rights in any publication of NFPA in which this proposal in this or another similar or analogous form is used.

Signature ***(Required)*** John B. Smith

PLEASE USE SEPARATE FORM FOR EACH PROPOSAL • NFPA FAX (617) 770-3500

Mail to: Secretary, Standards Council • NFPA • 1 Batterymarch Park • PO Box 9101 • Quincy, MA 02269-9101

Copyright National Fire Protection Association
Provided by IHS under license with NFPA
No reproduction or networking permitted without license from IHS
Not for Resale

NFPA Technical Committee Document Proposal Form

Note: All proposals must be received by 5:00 p.m. EST/EDST on the published proposal closing date.

For further information on the standards-making process, please contact Codes and Standards Administration at 617-984-7249. For technical assistance, please call NFPA at 617-770-3000.

FOR OFFICE USE ONLY
Log #: _____
Date Rec'd: _____

Please indicate in which format you wish to receive your ROP/ROC: ☐ **CD ROM** ☐ **paper** ☐ **download**
(Note: In choosing the download option you intend to view the ROP/ROC from our Website. No copy will be sent to you.)

Date _____ **Name** _____ **Telephone** _____
Company _____
Address _____ **City** _____ **State** _____ **Zip** _____
Please indicate organization represented (if any) _____

1. **a) NFPA Document Title** _____
   b) NFPA No. & Edition _____ **c) Section/Paragraph** _____

2. **Proposal Recommends:** *(check one)* ☐ **new text** ☐ **revised text** ☐ **deleted text**

3. **Proposal.** *(Include proposed new or revised wording, or identification of wording to be deleted.)* Note: Proposed text should be in legislative format, that is, use underscore to denote wording to be inserted (inserted wording) and strike-through to denote wording to be deleted (~~deleted wording~~). _____

4. **Statement of Problem and Substantiation for Proposal.** Note: State the problem that will be resolved by your recommendation. Give the specific reason for your proposal including copies of tests, research papers, fire experience, etc. If more than 200 words, it may be abstracted for publication. _____

5. ☐ **This Proposal is Original Material.** Note: Original material is considered to be the submitter's own idea based on or as a result of his/her own experience, thought, or research and, to the best of his/her knowledge, is not copied from another source.

   ☐ **This Proposal is Not Original Material; Its Source *(if known)* is as Follows:** _____

I hereby grant the NFPA all and full rights in copyright to this proposal, and I understand that I acquire no rights in any publication of NFPA in which this proposal in this or another similar or analogous form is used.

Signature *(Required)* _____

PLEASE USE SEPARATE FORM FOR EACH PROPOSAL • NFPA FAX (617) 770-3500

Mail to: Secretary, Standards Council • NFPA • 1 Batterymarch Park • PO Box 9101 • Quincy, MA 02269-9101

Copyright National Fire Protection Association
Provided by IHS under license with NFPA
No reproduction or networking permitted without license from IHS
Not for Resale