NFPA 271

Standard Method of Test for Heat and Visible Smoke Release Rates for Materials and Products Using an Oxygen Consumption Calorimeter

2004 Edition

NFPA, 1 Batterymarch Park, Quincy, MA 02169-7471
An International Codes and Standards Organization

--`,,,,,,-`-`,,`,,`,`,,`---

Copyright National Fire Protection Association
Provided by IHS under license with NFPA
No reproduction or networking permitted without license from IHS

Not for Resale

IMPORTANT NOTICES AND DISCLAIMERS CONCERNING NFPA DOCUMENTS

NOTICE AND DISCLAIMER OF LIABILITY CONCERNING THE USE OF NFPA DOCUMENTS

NFPA codes, standards, recommended practices, and guides, of which the document contained herein is one, are developed through a consensus standards development process approved by the American National Standards Institute. This process brings together volunteers representing varied viewpoints and interests to achieve consensus on fire and other safety issues. While the NFPA administers the process and establishes rules to promote fairness in the development of consensus, it does not independently test, evaluate, or verify the accuracy of any information or the soundness of any judgments contained in its codes and standards.

The NFPA disclaims liability for any personal injury, property or other damages of any nature whatsoever, whether special, indirect, consequential or compensatory, directly or indirectly resulting from the publication, use of, or reliance on this document. The NFPA also makes no guaranty or warranty as to the accuracy or completeness of any information published herein.

In issuing and making this document available, the NFPA is not undertaking to render professional or other services for or on behalf of any person or entity. Nor is the NFPA undertaking to perform any duty owed by any person or entity to someone else. Anyone using this document should rely on his or her own independent judgment or, as appropriate, seek the advice of a competent professional in determining the exercise of reasonable care in any given circumstances.

The NFPA has no power, nor does it undertake, to police or enforce compliance with the contents of this document. Nor does the NFPA list, certify, test or inspect products, designs, or installations for compliance with this document. Any certification or other statement of compliance with the requirements of this document shall not be attributable to the NFPA and is solely the responsibility of the certifier or maker of the statement.

Copyright National Fire Protection Association
Provided by IHS under license with NFPA
No reproduction or networking permitted without license from IHS
Not for Resale

ADDITIONAL NOTICES AND DISCLAIMERS

Updating of NFPA Documents

Users of NFPA codes, standards, recommended practices, and guides should be aware that these documents may be superseded at any time by the issuance of new editions or may be amended from time to time through the issuance of Tentative Interim Amendments. An official NFPA document at any point in time consists of the current edition of the document together with any Tentative Interim Amendments and any Errata then in effect. In order to determine whether a given document is the current edition and whether it has been amended through the issuance of Tentative Interim Amendments or corrected through the issuance of Errata, consult appropriate NFPA publications such as the National Fire Codes® Subscription Service, visit the NFPA website at www.nfpa.org, or contact the NFPA at the address listed below.

Interpretations of NFPA Documents

A statement, written or oral, that is not processed in accordance with Section 6 of the Regulations Governing Committee Projects shall not be considered the official position of NFPA or any of its Committees and shall not be considered to be, nor be relied upon as, a Formal Interpretation.

Patents

The NFPA does not take any position with respect to the validity of any patent rights asserted in connection with any items which are mentioned in or are the subject of NFPA codes, standards, recommended practices, and guides, and the NFPA disclaims liability for the infringement of any patent resulting from the use of or reliance on these documents. Users of these documents are expressly advised that determination of the validity of any such patent rights, and the risk of infringement of such rights, is entirely their own responsibility.

NFPA adheres to applicable policies of the American National Standards Institute with respect to patents. For further information contact the NFPA at the address listed below.

Law and Regulations

Users of these documents should consult applicable federal, state, and local laws and regulations. NFPA does not, by the publication of its codes, standards, recommended practices, and guides, intend to urge action that is not in compliance with applicable laws, and these documents may not be construed as doing so.

Copyrights

This document is copyrighted by the NFPA. It is made available for a wide variety of both public and private uses. These include both use, by reference, in laws and regulations, and use in private self-regulation, standardization, and the promotion of safe practices and methods. By making this document available for use and adoption by public authorities and private users, the NFPA does not waive any rights in copyright to this document.

Use of NFPA documents for regulatory purposes should be accomplished through adoption by reference. The term "adoption by reference" means the citing of title, edition, and publishing information only. Any deletions, additions, and changes desired by the adopting authority should be noted separately in the adopting instrument. In order to assist NFPA in following the uses made of its documents, adopting authorities are requested to notify the NFPA (Attention: Secretary, Standards Council) in writing of such use. For technical assistance and questions concerning adoption of NFPA documents, contact NFPA at the address below.

For Further Information

All questions or other communications relating to NFPA codes, standards, recommended practices, and guides and all requests for information on NFPA procedures governing its codes and standards development process, including information on the procedures for requesting Formal Interpretations, for proposing Tentative Interim Amendments, and for proposing revisions to NFPA documents during regular revision cycles, should be sent to NFPA headquarters, addressed to the attention of the Secretary, Standards Council, NFPA, 1 Batterymarch Park, P.O. Box 9101, Quincy, MA 02269-9101.

For more information about NFPA, visit the NFPA website at www.nfpa.org.

Copyright National Fire Protection Association
Provided by IHS under license with NFPA
No reproduction or networking permitted without license from IHS
Not for Resale

Copyright © 2004, National Fire Protection Association, All Rights Reserved

NFPA 271

Standard Method of Test for

Heat and Visible Smoke Release Rates for Materials and Products Using an Oxygen Consumption Calorimeter

2004 Edition

This edition of NFPA 271, *Standard Method of Test for Heat and Visible Smoke Release Rates for Materials and Products Using an Oxygen Consumption Calorimeter,* was prepared by the Technical Committee on Fire Tests and acted on by NFPA at its May Association Technical Meeting held May 23–16, 2004, in Salt Lake City, UT. It was issued by the Standards Council on July 16, 2004, with an effective date of August 5, 2004, and supersedes all previous editions.

This edition of NFPA 271 was approved as an American National Standard on August 5, 2004.

Origin and Development of NFPA 271

NFPA 271 was originally numbered NFPA 264 and was first published in 1992. NFPA 264 was closely related to and derived from NFPA 264A, *Standard Method of Test for Heat Release Rates for Upholstered Furniture Components or Composites and Mattresses Using an Oxygen Consumption Calorimeter.* NFPA 264 was based on the methods of measuring rates of heat release using an oxygen consumption calorimeter developed at the National Institute of Standards and Technology by Dr. Vytenis Babrauskas, et al. The document provided a general methodology for measuring the heat release rates of a variety of materials in a variety of end uses. It was intended that this approach be adopted and customized for the testing of specific products and materials. Such a bench-scale approach provides a mechanism for deriving information that can be used for product and material evaluation, mathematical modeling, and design purposes, as well as for research and development purposes.

The 1995 edition of NFPA 264 reflected changes that were both editorial and technical in nature. The technical revisions included standardization of the horizontal position as the orientation for testing of specimens. The horizontal orientation provides greater repeatable and reproducible results. The vertical orientation details, located in Annex D, were intended to be used more for research purposes. The definition of sustained flaming was revised from existence of flame for 10 seconds to existence of flame for 4 seconds, in order, to coordinate with other documents.

The 1998 edition of NFPA 264 was renumbered as NFPA 271. The designation was changed for coordination purposes and placed the document in rotation with other documents that use the oxygen consumption calorimeter. The changes to the 1998 edition were only minor in nature. They included updating the document to the latest terminology used in the industry and the current laboratory processes and some editorial clarification. A new section pertaining to the radiation shield was added.

The 2001 edition was a complete revision that incorporated the layout and provisions of the NFPA *Manual of Style,* 2000 edition. Minor revisions included updating ignition circuit applications in Chapter 2 and Annex D, identifying the type of radiation shield not permitted, and correcting the heat release calibration in Chapter 5.

The 2004 edition includes editorial changes to be in further compliance with NFPA's *Manual of Style.* Technical changes include revision to the term *sustained flaming* and new requirements concerning the test environment and the conditioning of text specimens. Advisory information has been added to the annex regarding testing of nonplanar surfaces and the testing of assemblies and materials not specified in the body of the standard. References to test methods similar to that of NFPA 271 are also provided.

--`,,,,,,-`-`,,`,,`,`,,`---

Copyright National Fire Protection Association
Provided by IHS under license with NFPA
No reproduction or networking permitted without license from IHS

Not for Resale

Technical Committee on Fire Tests

William E. Fitch, *Chair*
Omega Point Laboratories Inc., TX [SE]

Jesse J. Beitel, Hughes Associates, Inc., MD [SE]
April L. Berkol, Starwood Hotels & Resorts Worldwide, Inc., NY [U]
Rep. American Hotel & Lodging Association
Robert G. Bill, Jr., FM Global, MA [I]
Rep. FM Global/FM Research
John A. Blair, The DuPont Company, DE [M]
Rep. Society of the Plastics Industry Inc.
Gordon H. Damant, Inter-City Testing & Consulting Corporation of California, CA [SE]
Thomas W. Fritz, Armstrong World Industries, Inc., PA [M]
Pravinray D. Gandhi, Underwriters Laboratories Inc., IL [RT]
James R. Griffith, Southwest Research Institute, TX [RT]
Gordon E. Hartzell, Hartzell Consulting, Inc., TX [SE]
Marcelo M. Hirschler, GBH International, CA [SE]
Alfred J. Hogan, Reedy Creek Improvement District, FL [E]
Rep. International Fire Marshals Association
William E. Koffel, Koffel Associates, Inc., MD [SE]
James R. Lawson, U.S. National Institute of Standards & Technology, MD [RT]
Rodney A. McPhee, Canadian Wood Council, Canada [M]
Frederick W. Mowrer, University of Maryland, MD [SE]
David T. Sheppard, U.S. Department of Justice, MD [RT]
Kuma Sumathipala, American Forest & Paper Association, DC [M]
Rep. American Forest & Paper Association
T. Hugh Talley, Hugh Talley Company, TN [M]
Rep. Upholstered Furniture Action Council
Rick Thornberry, The Code Consortium, Inc., CA [SE]
William A. Webb, Performance Technology Consulting, Ltd., IL [SE]
Robert A. Wessel, Gypsum Association, DC [M]
Robert J. Wills, American Iron and Steel Institute, AL [M]
Rep. American Iron and Steel Institute
Peter J. Willse, GE Global Asset Protection Services, CT [I]
Rep. GE Global Asset Protection Services

Alternates

Robert M. Berhinig, Underwriters Laboratories Inc., IL [RT]
(Alt. to P. D. Gandhi)
Delbert F. Boring, Jr., American Iron and Steel Institute, OH [M]
(Alt. to R. J. Wills)
Richard J. Davis, FM Global, MA [I]
(Alt. to R. G. Bill)
Sam W. Francis, American Forest & Paper Association, PA [M]
(Alt. to K. Sumathipala)
Richard G. Gann, Ph.D., U.S. National Institute of Standards & Technology, MD [RT]
(Alt. to J. R. Lawson)
Paul A. Hough, Armstrong World Industries, Inc., PA [M]
(Alt. to T. W. Fritz)
James K. Lathrop, Koffel Associates, Inc., CT [SE]
(Alt. to W. E. Koffel)
James A. Milke, University of Maryland, MD [SE]
(Alt. to F. W. Mowrer)
Arthur J. Parker, Hughes Associates, Inc., MD [SE]
(Alt. to J. J. Beitel)
Ronald A. Schulz, GE Global Asset Protection Services, MI [I]
(Alt. to P. J. Willse)
Ineke Van Zeeland, Canadian Wood Council, Canada [M]
(Alt. to R. A. McPhee)
Joe Ziolkowski, American Furniture Manufacturers Association, NC [M]
(Alt. to T. H. Talley)

Nonvoting

Robert H. Barker, American Fiber Manufacturers Association, VA [M]
Rep. American Fiber Manufacturers Association
Tod L. Jilg, Hoechst Celanese Corporation, NC [M]
Rep. American Fiber Manufacturers Association
Rohit Khanna, U.S. Consumer Product Safety Commission, MD [C]
[Alt. to NV Principal]

Milosh T. Puchovsky, NFPA Staff Liaison

This list represents the membership at the time the Committee was balloted on the final text of this edition. Since that time, changes in the membership may have occurred. A key to classifications is found at the back of the document.

NOTE: Membership on a committee shall not in and of itself constitute an endorsement of the Association or any document developed by the committee on which the member serves.

Committee Scope: This Committee shall have primary responsibility for documents on fire testing procedures, for reviewing existing fire test standards and recommending appropriate action to NFPA, for recommending the application of and advising on the interpretation of acceptable test standards for fire problems of concern to NFPA technical committees and members, and for acting in a liaison capacity between NFPA and the committees of other organizations writing fire test standards. This Committee does not cover fire tests that are used to evaluate extinguishing agents, devices, or systems.

Copyright National Fire Protection Association
Provided by IHS under license with NFPA
No reproduction or networking permitted without license from IHS
Not for Resale

Contents

Chapter 1 Administration **271**– 4
1.1 Scope **271**– 4
1.2 Purpose **271**– 4
1.3 Application **271**– 4
1.4 Units **271**– 5
1.5 Symbols **271**– 5

Chapter 2 Referenced Publications (Reserved) **271**– 5

Chapter 3 Definitions **271**– 5
3.1 General **271**– 5
3.2 NFPA Official Definitions **271**– 5
3.3 General Definitions **271**– 5

Chapter 4 Test Apparatus **271**– 6
4.1 General **271**– 6
4.2 Conical Heater **271**– 6
4.3 Temperature Controller **271**– 7
4.4 Exhaust System **271**– 7
4.5 Load Cell **271**– 7
4.6 Specimen Mounting **271**– 7
4.7 Ignition Circuit **271**– 9
4.8 Ignition Timer **271**– 9
4.9 Gas Sampling **271**– 9
4.10 Oxygen Analyzer **271**– 9
4.11 Smoke Obscuration–Measuring System **271**–10
4.12 Heat Flux Meter **271**–10
4.13 Calibration Burner **271**–10
4.14 Optical Calibration Filters **271**–10
4.15 Digital Data Collection **271**–10
4.16 Test Environment **271**–10

Chapter 5 Calibration of Equipment **271**–11
5.1 Heater Flux Calibration **271**–11
5.2 Oxygen Analyzer Calibration **271**–11
5.3 Heat Release Calibration **271**–12
5.4 Load Cell Calibration **271**–12
5.5 Smoke Meter Calibration **271**–12

Chapter 6 Test Specimens **271**–12
6.1 Specimen Size **271**–12
6.2 Specimen Testing **271**–12
6.3 Conditioning **271**–12

Chapter 7 Test Procedure **271**–12
7.1 Preparation **271**–12
7.2 Procedure **271**–12
7.3 Safety Precautions **271**–13

Chapter 8 Calculations **271**–13
8.1 General **271**–13
8.2 Calibration Constant Using Methane **271**–13
8.3 Calculations for Test Specimen **271**–13

Chapter 9 Report **271**–14
9.1 Required Information **271**–14

Annex A Explanatory Material **271**–14

Annex B Precision and Bias **271**–16

Annex C Calculation of Heat Release with Additional Gas Analysis **271**–16

Annex D Testing of Specimens in the Vertical Orientation **271**–18

Annex E Commentary **271**–19

Annex F Method of Determining Suitability of Oxygen Analyzers for Making Heat Release Measurements **271**–21

Annex G Informational References **271**–22

Index **271**–23

Copyright National Fire Protection Association
Provided by IHS under license with NFPA
No reproduction or networking permitted without license from IHS
Not for Resale

NFPA 271

Standard Method of Test for

Heat and Visible Smoke Release Rates for Materials and Products Using an Oxygen Consumption Calorimeter

2004 Edition

IMPORTANT NOTE: This NFPA document is made available for use subject to important notices and legal disclaimers. These notices and disclaimers appear in all publications containing this document and may be found under the heading "Important Notices and Disclaimers Concerning NFPA Documents." They can also be obtained on request from NFPA or viewed at www.nfpa.org/disclaimers.

NOTICE: An asterisk (*) following the number or letter designating a paragraph indicates that explanatory material on the paragraph can be found in Annex A.

Changes other than editorial are indicated by a vertical rule beside the paragraph, table, or figure in which the change occurred. These rules are included as an aid to the user in identifying changes from the previous edition. Where one or more complete paragraphs have been deleted, the deletion is indicated by a bullet (•) between the paragraphs that remain.

Information on referenced publications can be found in Chapter 2 and Annex G.

Chapter 1 Administration

1.1 Scope.

1.1.1* This test method measures the response of materials exposed to controlled levels of radiant heating, with or without an external igniter.

1.1.2 This test method determines the ignitibility, heat release rate, mass loss rates, effective heat of combustion, and visible smoke development of materials and products.

1.1.3* This test method tests the specimen in the horizontal orientation.

1.2 Purpose.

1.2.1* This test method provides measurements of the behavior of material and product specimens under a specified radiant heat exposure in terms of the rate of heat release, effective heat of combustion, mass loss rate, time to ignition, and smoke production.

1.2.2 The data obtained for a specific test describe the rate of heat and smoke release of the specimen when exposed to the specific conditions and procedures used in performance of that test.

1.2.3 Release rate measurements provide a quantitative measure of specific changes in performance caused by product modification.

1.3 Application.

1.3.1 Significance.

1.3.1.1 This test method is useful for the following:

(1) Evaluations of materials or products
(2) Mathematical modeling
(3) Design of new materials or products
(4) Research and development

1.3.1.2 Types of materials suitable for testing with this method include specimens from an end-use product and the various components used in the end-use product.

1.3.1.3 Release rates for a given material depend on how the material is used, its thickness, and the method of mounting.

1.3.1.4 Other factors, some of which cannot be controlled, that can affect the heat release rate for a given material include the orientation of the material (vertical, horizontal, or otherwise), the types of joints or other methods used for installation, the way the material reacts to fire (melts and drips, recedes, chars, pyrolyzes, intumesces, or flames), and the use of fire retardants.

1.3.1.5 This standard does not purport to address all safety problems associated with its use. The user of this standard shall be responsible for establishing appropriate safety and health practices and for determining the applicability of regulatory limitations prior to use.

1.3.2* Test Limitations.

1.3.2.1* This test method shall not apply to end-use products that do not have planar external surfaces.

1.3.2.2 The test data shall be invalid if any of the following occurs:

(1) The specimen undergoes explosive spalling.
(2) The specimen swells to the point where it touches the spark plug prior to ignition.
(3) The specimen swells to the point where it touches the heater base plate during combustion.

1.3.2.3 If delamination of the specimen occurs, the test results shall be considered suspect, and this shall be described in the test report.

1.3.2.4* This test method shall be performed in a controlled environment under controlled laboratory conditions in order to obtain material properties data for use in evaluating the fire hazard of materials.

1.3.2.4.1 These data alone do not describe the fire hazard of a material's specific end use or predict its response to real fires.

1.3.2.4.2 The data obtained by this test method have not yet been correlated with the real-world fire performance for most materials.

1.3.2.4.3 Thus, caution shall be used in the utilization of such data to evaluate the full-scale fire performance of the end use of materials tested in accordance with this method.

1.3.3 Summary of Test Method.

1.3.3.1 This test method is based on the observation that the net heat of combustion is directly related to the amount of oxygen necessary for combustion: Approximately 13.1×10^3 kJ of heat are released per 1 kg of oxygen consumed.

1.3.3.2 Specimens in the test shall be combusted in ambient air conditions while being subjected to a predetermined external radiant heat flux, which ranges from 0 kW/m^2 to 100 kW/m^2. Combustion shall be initiated with or without a spark ignition.

1.3.3.3 The primary measurements, as a function of time, shall be oxygen concentration and exhaust gas flow rate (for assessing heat release rate).

Copyright National Fire Protection Association
Provided by IHS under license with NFPA
No reproduction or networking permitted without license from IHS
Not for Resale

1.3.3.3.1 Additional measurements shall include specimen mass, for assessing mass loss rate and smoke obscuration, both of them as a function of time, and time to sustained flaming, which is a measure of ignitibility.

1.3.3.3.2 The test method is also suitable for other measurements.

1.3.3.4* This test method shall be intended to determine the heat released by a product or material when exposed to an external radiant heat source.

1.3.3.4.1 It also determines the effective heat of combustion, mass loss rate, time to sustained flaming, and smoke production.

1.3.3.4.2 These properties shall be determined on small-size specimens that are representative of the intended end-use materials.

1.3.3.5 The rate of heat release shall be determined by measurement of the oxygen consumption, which is determined by the oxygen concentration and the flow rate in the exhaust product stream.

1.3.3.5.1 The effective heat of combustion shall be determined from a concomitant measurement of specimen mass loss rate in combination with the heat release rate.

1.3.3.5.2 Smoke development shall be determined from the obscuration of light by the combustion product stream.

1.3.3.6 This test method shall be applicable to various categories of products and shall not be limited to a single fire scenario.

1.3.3.7* Specimens shall be exposed to heating fluxes in the range of 0 kW/m^2 to 100 kW/m^2 in a horizontal orientation.

1.3.3.7.1 External ignition, where used, shall be by electric spark.

1.3.3.7.2 The value of the heating flux and the use of external ignition shall be specified by the relevant material or performance standard or by the test sponsor for research and development purposes.

1.3.3.8 Ignitibility shall be determined as a measurement of time from initial exposure to time of sustained flaming.

1.4 Units.

1.4.1 The values stated in SI units shall be regarded as the standard.

1.4.2 Unless otherwise stated, all dimensions included in the test and figures shall be mandatory and shall be followed within nominal tolerances of 1 mm. Dimensions in figures that are not followed by an asterisk (*) shall be considered nonmandatory.

1.5 Symbols. The following symbols are used in this standard:

A_s	=	nominal specimen exposed surface area ($0.01\ m^2$)
C	=	calibration constant for oxygen consumption analysis ($m^{1/2}\ kg^{1/2}K^{1/2}$)
$-dm/dt$	=	required mass loss rate
$\Delta H_c/r_0$	=	net heat of combustion (kJ/kg)
$\Delta H_{c,eff}$	=	effective heat of combustion (kJ/kg)
I	=	actual beam intensity
I_0	=	beam intensity with no smoke
k	=	smoke extinction coefficient (m^{-1})
L	=	extinction beam path length (m)
m	=	specimen mass (kg)
m_f	=	final specimen mass (kg)
m_i	=	initial specimen mass (kg)
$\dot{m}$	=	specimen mass loss rate (kg/sec)
ΔP	=	orifice meter pressure differential (Pa)
q''	=	total heat release (kJ/m^2)
$\dot{q}$	=	heat release rate (kW)
$\dot{q}''$	=	heat release rate per unit area (kW/m^2)
t_0	=	stoichiometric oxygen/fuel mass ratio
t	=	time (sec)
t_d	=	oxygen analyzer delay time (sec)
Δt	=	sampling time interval (sec)
T_e	=	absolute temperature of gas at the orifice meter (K)
$\dot{v}$	=	volume exhaust flow rate measured at the location of the laser photometer (m^3/sec)
X_{O_2}	=	oxygen analyzer reading, mole fraction of O_2
$X^0_{O_2}$	=	initial value of oxygen analyzer reading
$X^1_{O_2}$	=	oxygen analyzer reading before delay time correction
s_f	=	specific extinction area for smoke (m^2/kg)

Chapter 2 Referenced Publications (Reserved)

Chapter 3 Definitions

3.1 General. The definitions contained in this chapter shall apply to the terms used in this standard. Where terms are not included, common usage of the terms shall apply.

3.2 NFPA Official Definitions.

3.2.1 Shall. Indicates a mandatory requirement.

3.2.2 Should. Indicates a recommendation or that which is advised but not required.

3.2.3 Standard. A document, the main text of which contains only mandatory provisions using the word "shall" to indicate requirements and which is in a form generally suitable for mandatory reference by another standard or code or for adoption into law. Nonmandatory provisions shall be located in an annex, footnote, or fine-print note and are not to be considered a part of the requirements of a standard.

3.3 General Definitions.

3.3.1 Heat of Combustion.

3.3.1.1 ***Effective Heat of Combustion.*** The measured heat release divided by the mass loss for a specified time period.

3.3.1.2* ***Net Heat of Combustion.*** The oxygen bomb calorimeter value for the heat of combustion, corrected for the gaseous state of product water.

3.3.2 Heat Release Rate. The heat evolved from the specimen, per unit of time.

3.3.3 Heating Flux. The incident radiant heat flux imposed externally from the heater on the specimen at the initiation of the test.

3.3.4 Ignitibility. The propensity for ignition, as measured by the time to sustained flaming, in seconds, at a specified heating flux.

Copyright National Fire Protection Association
Provided by IHS under license with NFPA
No reproduction or networking permitted without license from IHS
Not for Resale

3.3.5 Orientation. The plane in which the exposed face of the specimen is located during testing (i.e., horizontally facing the heater).

3.3.6 Oxygen Consumption Principle. The expression of the relationship between the mass of oxygen consumed during combustion and the heat released.

3.3.7 Smoke Obscuration. The reduction of light transmission by smoke, as measured by light attenuation.

3.3.8 Sustained Flaming. The existence of flame for a period of at least 4 seconds.

3.3.9 Visible Smoke. The obscuration of transmitted light caused by combustion products released during the test.

Chapter 4 Test Apparatus

4.1 General. The test apparatus shall consist of the following components:

(1) A conical-shaped radiant electric heater
(2) Specimen holders
(3) An exhaust gas system with oxygen-monitoring and flow-measuring instrumentation
(4) An electric ignition spark plug
(5) A data collection and analysis system
(6) A load cell for measuring specimen mass loss

4.1.1 A general view of the apparatus shall be as shown in Figure 4.1.1.

4.1.2 A cross-sectional view of the heater shall be as shown in Figure 4.1.2.

4.1.3 An exploded view of the horizontal orientation shall be as shown in Figure 4.1.3.

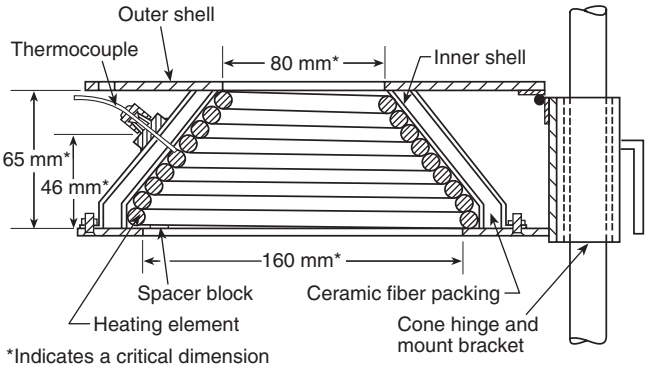

FIGURE 4.1.2 Cross-Sectional View of Heater.

4.2 Conical Heater.

4.2.1 The active element of the heater shall consist of an electrical heater rod, rated at 5000 W at 240 V and tightly wound into the shape of a truncated cone, as shown in Figure 4.1.2.

4.2.2 The heater shall be encased on the outside with a double-wall stainless steel cone packed with a refractory fiber material of approximately 100 kg/m^3 density.

4.2.3* The heater shall be mounted in a horizontal orientation.

4.2.4 The heater shall be capable of producing irradiances on the surface of the specimen of up to 100 kW/m^2.

4.2.5 The irradiance shall be uniform within the central 50 mm × 50 mm area of the specimen to within 10 percent.

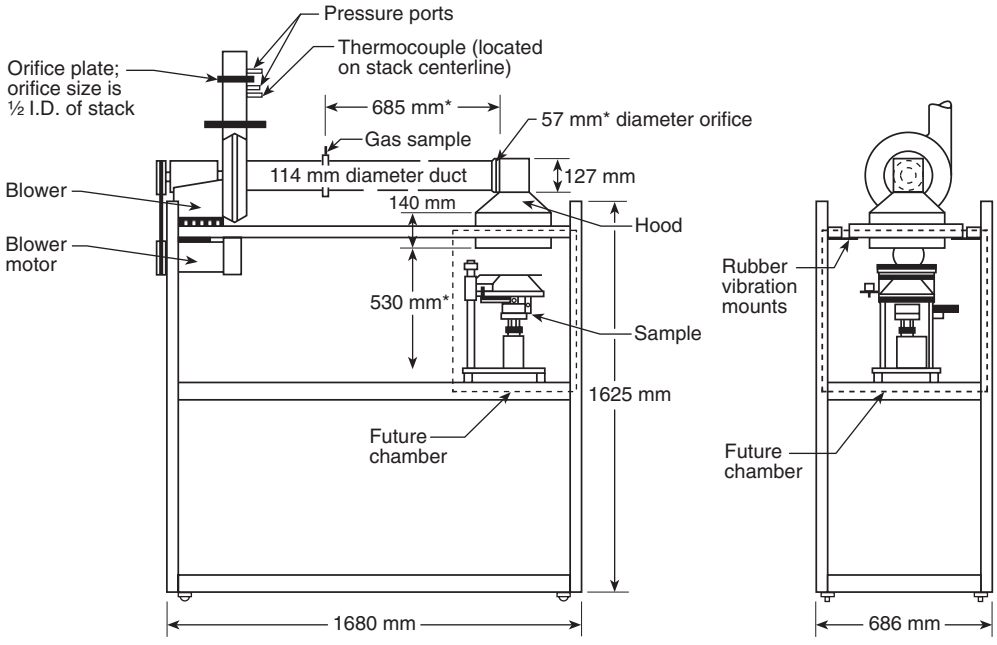

*Indicates a critical dimension

FIGURE 4.1.1 Overall View of Apparatus.

Copyright National Fire Protection Association
Provided by IHS under license with NFPA
No reproduction or networking permitted without license from IHS
Not for Resale

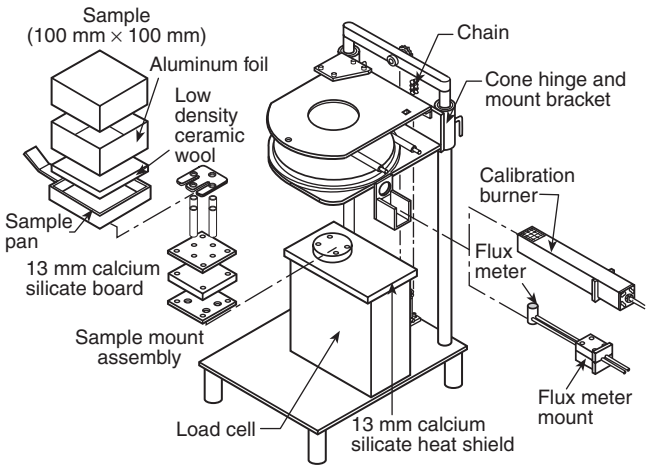

FIGURE 4.1.3 Exploded View, Horizontal Orientation, of Apparatus.

4.2.6 The irradiance from the heater shall be capable of being held at a preset level by means of a temperature controller and three Type K stainless steel–sheathed thermocouples, symmetrically dispersed and in contact with, but not welded to, the heater element, as shown in Figure 4.1.2.

4.2.7 The thermocouples shall be of equal length and wired in parallel to the temperature controller.

4.2.8 The standard thermocouples shall be sheathed, 1.5 mm to 1.6 mm O.D., with an unexposed hot junction. Alternatively, either 3 mm O.D. sheathed thermocouples with an exposed hot junction or 1 mm O.D. sheathed thermocouples with unexposed hot junction shall be suitable for use.

4.2.9 Radiation Shield.

4.2.9.1 The cone heater shall be provided with a removable radiation shield to protect the specimen from the heat flux prior to the start of the test.

4.2.9.2 The shield shall be made of noncombustible material, with a total thickness not to exceed 12 mm.

4.2.9.3 The shield shall be one of the following:

(1) Water-cooled and coated with a durable matte black finish of surface emissivity, $e = 0.95 \pm 0.05$
(2) Not water-cooled, with a metallic reflective top surface
(3) Not water-cooled, with a ceramic, nonmetallic surface that minimizes radiation transfer to the specimen surface

4.2.9.4 The shield shall be equipped with a handle or other suitable means for insertion and removal in accordance with 7.2.2 and 7.2.3.

4.2.9.5 The cone heater base plate shall be equipped with the means for holding the shield in position and allowing its insertion and removal in accordance with 7.2.2 and 7.2.3.

4.3 Temperature Controller.

4.3.1 The temperature controller for the heater shall be capable of holding the element temperature steady to within 2°C.

4.3.2 An acceptable system shall be a three-term controller (proportional, integral, and derivative) and a thyristor unit capable of switching currents up to 25 A at 250 V.

4.3.3 The controller shall have a temperature input range of 0°C to 1000°C, a set scale capable of being read to 2°C or better, and automatic cold junction compensation.

4.3.4 The controller shall be equipped with a safety feature that, in the event of an open circuit in the thermocouple line, causes the temperature to fall to near the bottom of its range.

4.3.5 The thyristor unit shall be of the zero crossing type and not of the phase angle type.

4.3.6 The heater temperature shall be monitored by a meter capable of being read to 2°C or better.

4.4 Exhaust System.

4.4.1 The exhaust gas system shall consist of a high-temperature centrifugal exhaust fan, a hood, intake and exhaust ducts for the fan, and an orifice plate flowmeter as shown in Figure 4.4.1.

4.4.2 The exhaust system shall be capable of developing flows from 0.012 m^3/sec to 0.035 m^3/sec.

4.4.3 A restrictive orifice (57 mm I.D.) shall be located between the hood and the duct to promote mixing.

4.4.4 A ring sampler for gas sampling shall be located in the fan intake duct 685 mm from the hood, as shown in Figure 4.4.1.

4.4.5 The ring sampler shall contain 12 holes to average the stream composition, with the holes facing away from the flow to avoid soot clogging.

4.4.6 The temperature of the gas stream shall be measured using a 1.0 mm to 1.6 mm O.D. sheathed-junction thermocouple or a 3 mm O.D. exposed-junction thermocouple positioned in the exhaust stack on the centerline and 100 mm upstream from the measuring orifice plate.

4.4.7 The flow rate shall be determined by measuring the differential pressure across a sharp-edged orifice (57 mm I.D.) in the exhaust stack at a location at least 350 mm downstream from the fan.

4.4.8 For other features, the geometry of the exhaust system shall not be considered critical. The undisturbed inflow distances to the gas-sampling probe and the measuring orifice shall be sufficient for the flow to be uniformly mixed.

4.5 Load Cell.

4.5.1 The arrangement of the specimen holders on the load cell shall be as indicated in Figure 4.1.3.

4.5.2 The load cell shall have an accuracy of 0.1 g and a measuring range of 500 g.

4.6 Specimen Mounting.

4.6.1 The horizontal specimen holder shall be as shown in Figure 4.6.1.

4.6.2* The bottom of the horizontal specimen holder shall be lined with a layer of low-density (nominal density 65 kg/m^3) refractory fiber blanket with a thickness of at least 13 mm.

4.6.3 The distance between the bottom surface of the cone heater and the top of the specimen shall be adjusted to 25 mm.

4.6.4 A retainer frame and a wire grid, as shown in Figure 4.6.4(a) and Figure 4.6.4(b), respectively, shall be used in the testing of intumescing specimens to reduce unrepresentative edge-burning of composite specimens and for retaining specimens prone to delamination. Other techniques shall be permitted to be utilized if documented in the test report.

--`,,,,,,-`-`,,`,,`,`,,`---

Copyright National Fire Protection Association
Provided by IHS under license with NFPA
No reproduction or networking permitted without license from IHS
Not for Resale

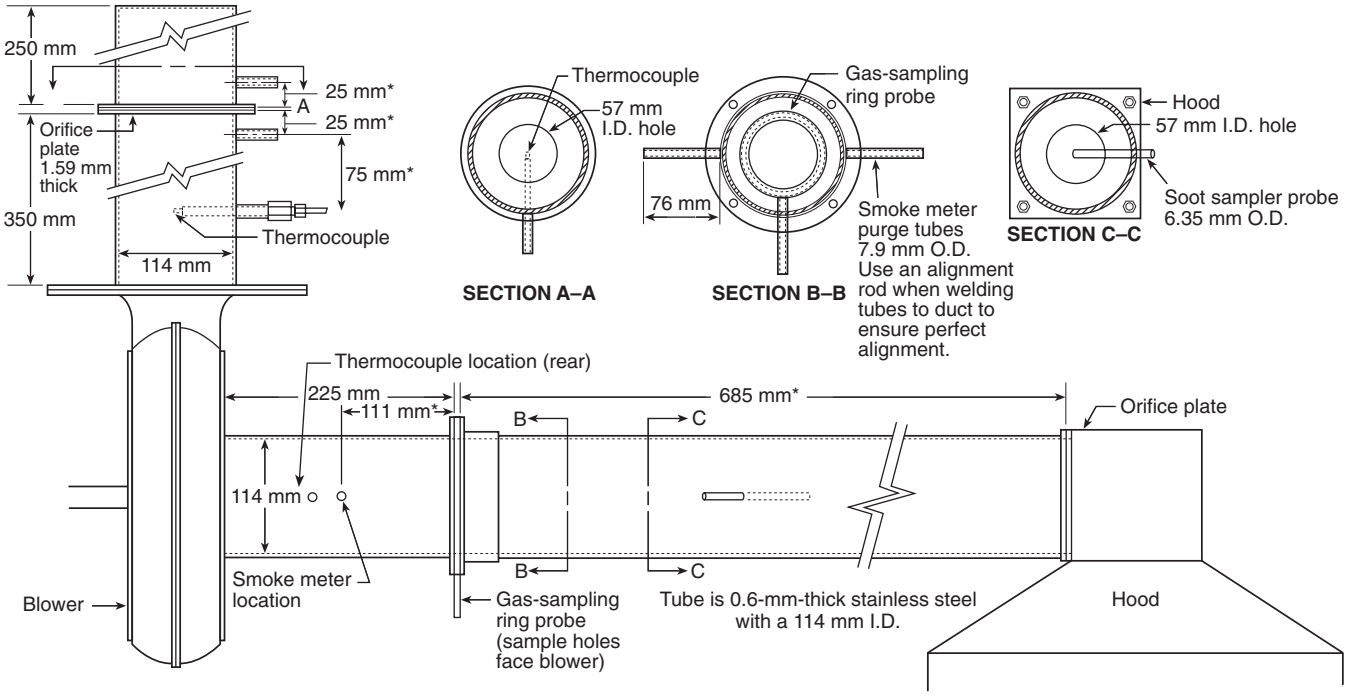

Note: Drawing not to scale
*Indicates a critical dimension

FIGURE 4.4.1 Exhaust System.

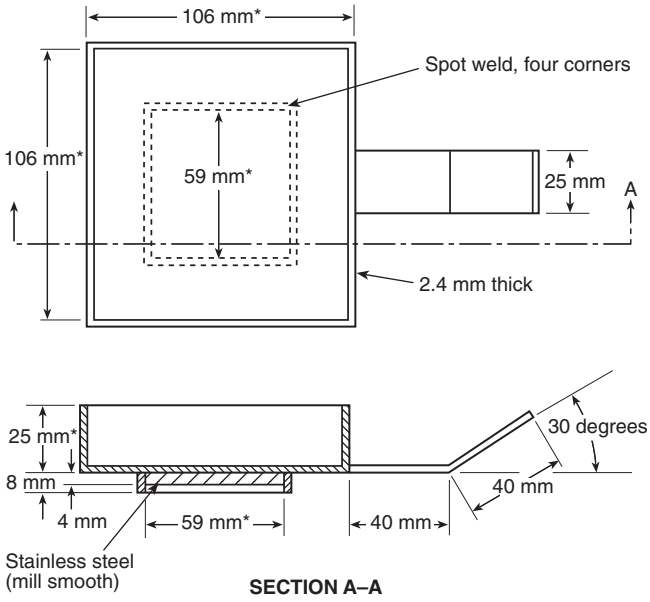

*Indicates a critical dimension

FIGURE 4.6.1 Horizontal Specimen Holder.

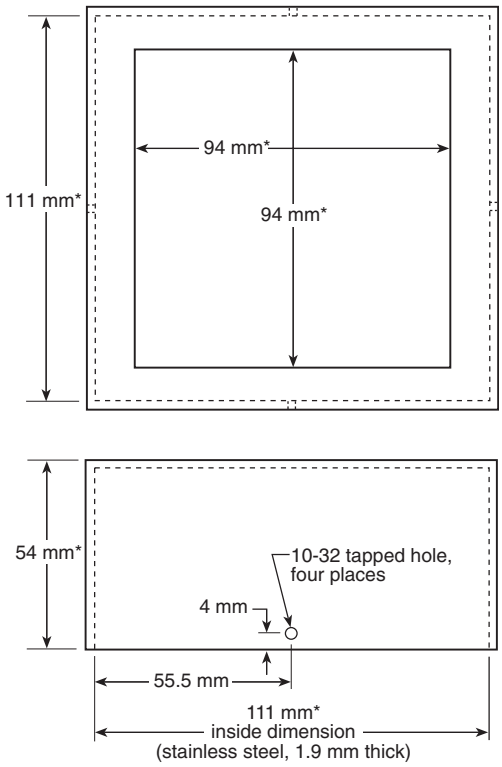

*Indicates a critical dimension

FIGURE 4.6.4(a) Optional Retainer Frame.

Copyright National Fire Protection Association
Provided by IHS under license with NFPA
No reproduction or networking permitted without license from IHS
Not for Resale

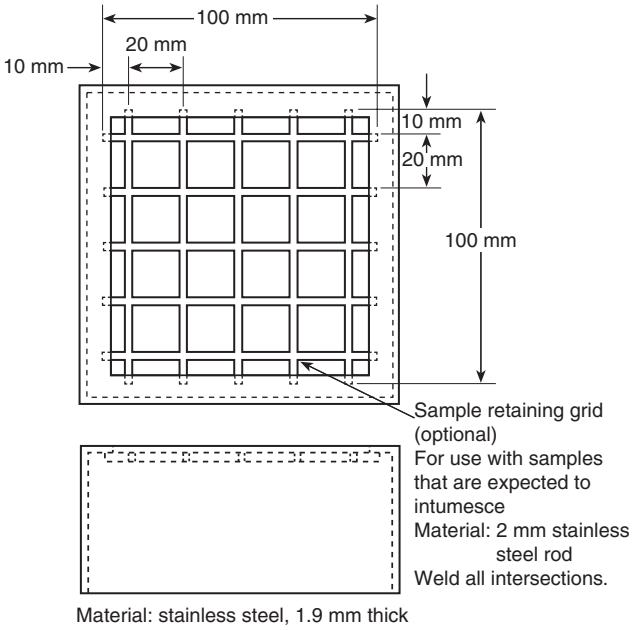

FIGURE 4.6.4(b) Optional Wire Grid.

4.7 Ignition Circuit.

4.7.1 External ignition shall be accomplished by a spark plug powered from a 10 kV transformer or by a 10 kV spark generator.

4.7.2 The length and location of the spark plug or spark generator electrode shall be such that the spark shall have a gap of 3 mm.

4.7.3 The spark gap shall be located 13 mm above the center of the specimen in the horizontal orientation.

4.7.4 If a spark plug and transformer are used, the transformer shall be of a type specifically designed for spark ignition use. The transformer shall have an isolated (ungrounded) secondary to minimize interference with the data transmission lines.

4.7.5 The igniter shall be removed when sustained flaming is achieved for a period of 4 seconds.

4.8 Ignition Timer. The timing device for measuring time to sustained flaming shall be capable of recording elapsed time to the nearest second and shall be accurate to within 1 second in 1 hour.

4.9* Gas Sampling. Gas-sampling arrangements such that as shown in Figure 4.9 shall incorporate a pump, a filter to prevent entry of soot, a cold trap to remove most of the moisture, a bypass system set to divert all flow except that required for the oxygen analyzer, a further moisture trap, and a trap for CO_2 removal where CO_2 is not measured. If CO_2 is removed, an additional moisture trap is required downstream from the CO_2 trap.

4.10 Oxygen Analyzer.

4.10.1 The analyzer shall be of the paramagnetic type with a range of 0 percent to 25 percent O_2.

4.10.2 The analyzer shall exhibit a linear response and drift of not more than 50 ppm O_2 (root-mean-square value) over a period of ½ hour.

4.10.3 The stream pressure shall be regulated upstream of the analyzer to allow for flow fluctuations, and the readings from the analyzer shall be compensated with an absolute pressure regulator to allow for atmospheric pressure variations.

4.10.4 The analyzer and the absolute pressure regulator shall be located in a constant-temperature environment.

4.10.5 The oxygen analyzer shall have a 10 percent to 90 percent response time of less than 12 seconds.

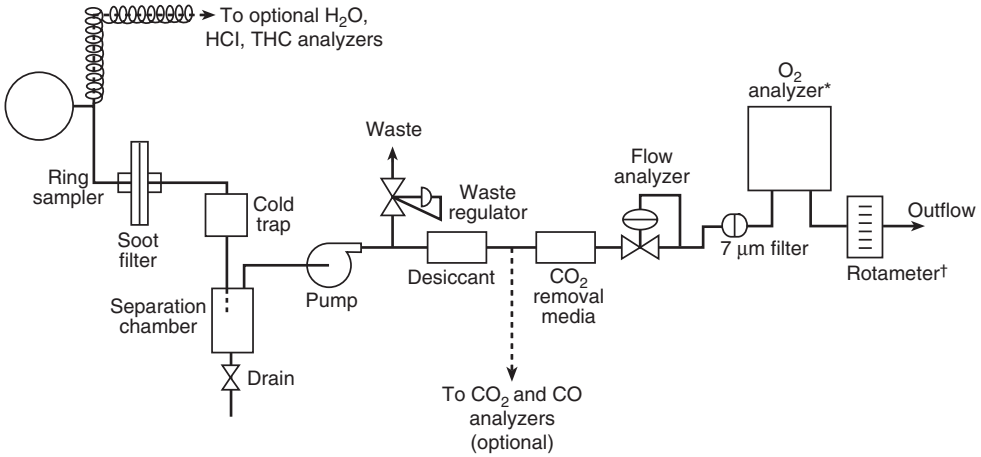

*To include absolute pressure transducer
†On outlet of O_2 analyzer.

FIGURE 4.9 Gas Analyzer Instrumentation.

Copyright National Fire Protection Association
Provided by IHS under license with NFPA
No reproduction or networking permitted without license from IHS
Not for Resale

4.11 Smoke Obscuration–Measuring System.

4.11.1 The smoke-measuring system, as shown in Figure 4.11.1, shall consist of a helium–neon laser, silicon photodiodes as main beam and reference detectors, and appropriate electronics to derive the extinction coefficient and to set the zero reading.

4.11.2 The system shall be designed to be resiliently attached to the exhaust duct by means of refractory gasketing at the location shown in Figure 4.4.1. This can be achieved either by using an optical bench or by split toke mounting in two pieces that are rigidly fastened together.

4.11.3 The meter shall be located in place by means of two small-diameter tubes welded onto each side of the exhaust duct. These tubes shall serve as part of the light baffling for the air purging and shall also allow for any smoke that enters despite the purge flow to be deposited on tube walls before reaching the optical elements.

4.12 Heat Flux Meter.

4.12.1 The total heat flux meter shall be of the Gardon (foil) or Schmidt–Boetler (thermopile) type, with a design range of 100 kW/m^2.

4.12.1.1 The target receiving radiation shall be flat, circular, approximately 12.5 mm in diameter, and coated with a durable, matte black finish.

4.12.1.2 The target shall be water-cooled.

4.12.1.3 Radiation shall not pass through any window before reaching the target.

4.12.1.4 The instrument shall be robust, simple to set up and use, and stable in calibration.

4.12.1.5 The instrument shall have an accuracy within 3 percent and a repeatability within 0.5 percent.

4.12.2 The calibration of the heat flux meter shall be checked whenever the apparatus is recalibrated by comparison with an instrument (of the same type as the working heat flux meter and of similar range) used only as a reference standard. The reference standard shall be fully calibrated at a standardizing laboratory at yearly intervals.

4.12.3 The heat flux meter shall be used to calibrate the heater temperature controller as shown in Figure 4.1.3. The meter shall be positioned at a location equivalent to the center of the specimen face during the calibration.

4.13 Calibration Burner.

4.13.1 A calibration burner shall be used to calibrate the rate of heat release apparatus as shown in Figure 4.1.3. The burner shall be constructed from a square-sectional brass tube with a square orifice covered with wire gauze through which the gas diffuses, as shown in Figure 4.13.1.

4.13.2 The tube shall be packed with ceramic fiber to improve uniformity of flow.

4.13.3 The calibration burner shall be connected to a metered supply of methane with a purity of at least 99.5 percent.

4.14 Optical Calibration Filters. Glass neutral density filters of at least two different values and accurately calibrated at the laser wavelength of 0.6328 microns shall be provided.

4.15 Digital Data Collection.

4.15.1 The data collection system used shall have facilities for the recording of the output from the O_2 analyzer, the orifice meter, the thermocouples, the load cell, and the smoke-measuring system.

4.15.2 The data collection system shall have an accuracy corresponding to at least 50 ppm O_2 for the oxygen channel, 0.5°C for the temperature-measuring channels, and 0.01 percent of full-scale instrument output for all other instrument channels.

4.15.3 The system shall be capable of recording data for at least 1 hour at intervals not exceeding 2 seconds.

4.16 Test Environment. The apparatus shall be located in an atmosphere of relative humidity of between 40 percent and 60 percent and a temperature of between 16°C and 26°C.

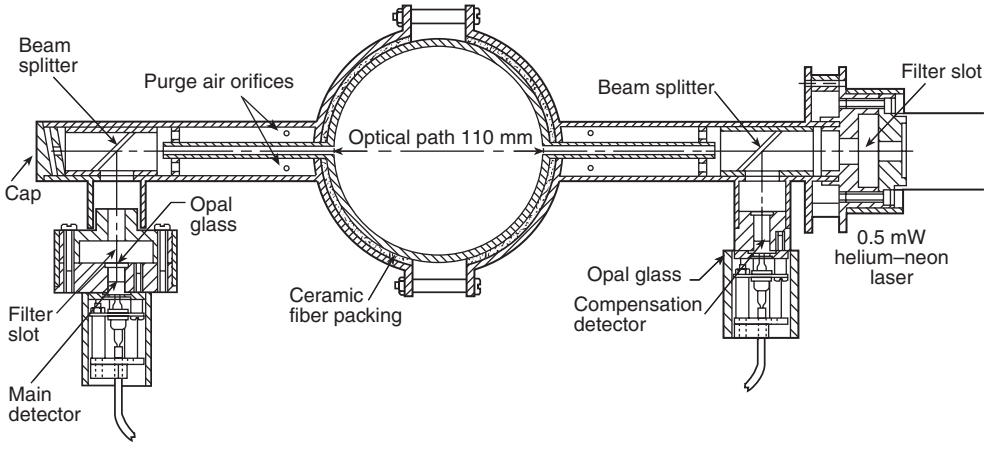

FIGURE 4.11.1 Smoke Obscuration–Measuring System.

Copyright National Fire Protection Association
Provided by IHS under license with NFPA
No reproduction or networking permitted without license from IHS
Not for Resale

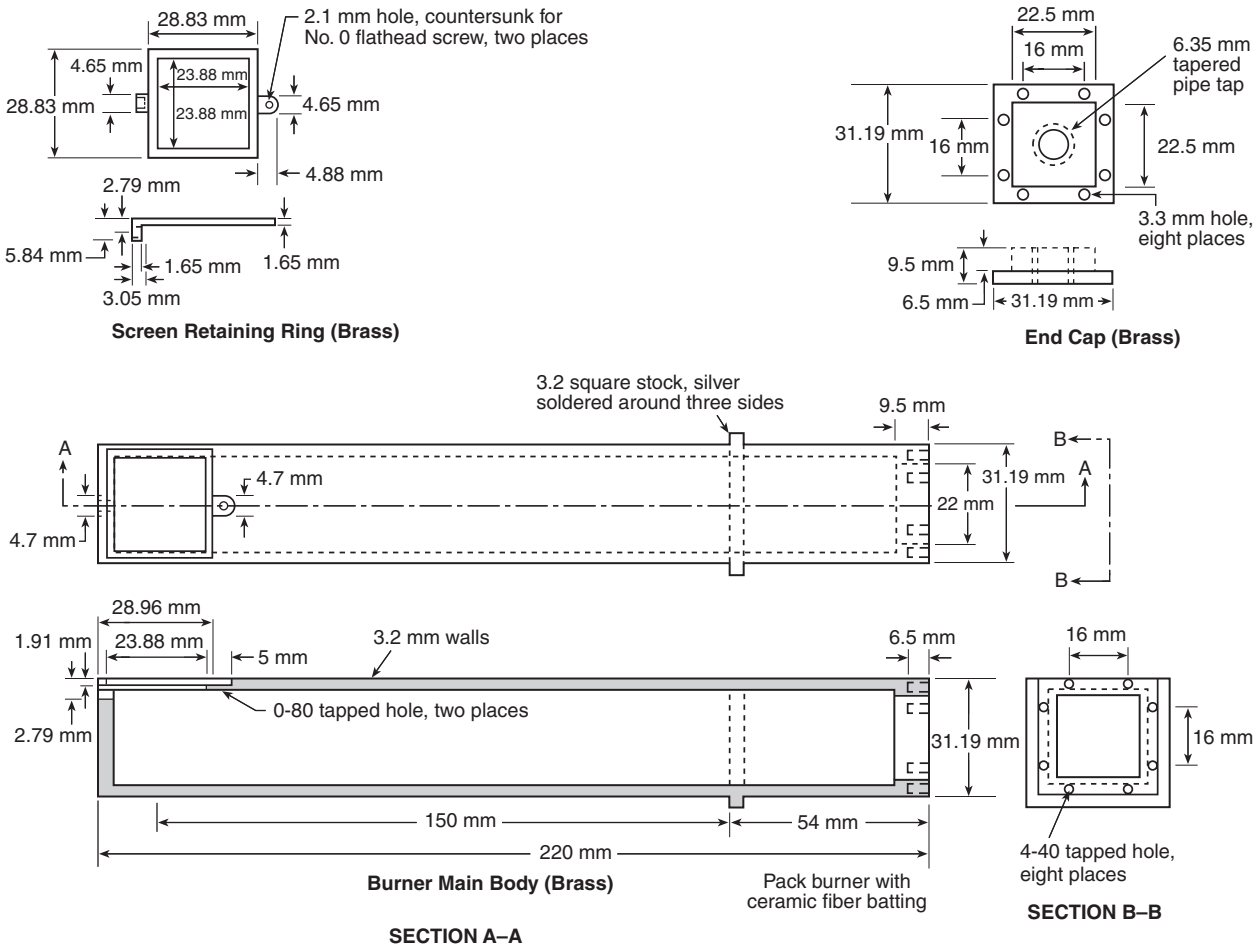

FIGURE 4.13.1 Calibration Burner.

Chapter 5 Calibration of Equipment

5.1 Heater Flux Calibration.

5.1.1 The temperature controller shall be set at the required flux by using the heat flux meter at the start of the test day or after changing to a new flux level.

5.1.2 A specimen or specimen holder shall not be used when the heat flux meter is inserted into the calibration position.

5.1.3 The cone heater shall be operated for at least 10 minutes, and it shall be ensured that the controller is within its proportional band before the calibration is begun.

5.2 Oxygen Analyzer Calibration.

5.2.1 Preliminary Calibration.

5.2.1.1 The oxygen analyzer delay time shall be determined by setting a methane flow rate to the calibration burner that is equivalent to 5.0 kW. The heater shall not be turned on for this calibration.

5.2.1.2 The output of the analyzer shall be recorded on a data acquisition device or on a strip chart recorder as the methane supply, turned on and ignited, reaches a steady value and then returns to baseline after the supply is cut off. The temperature for the exhaust orifice meter shall be recorded at the same time.

5.2.1.3 The turn-on delay shall be determined from the difference between the time at which the temperature reading reaches 50 percent of its ultimate deflection and the time at which the oxygen reading reaches 50 percent of its ultimate deflection. The turn-off delay shall be determined similarly at turn-off.

5.2.1.4 The delay time shall be the average of the turn-on delay and turn-off delay.

5.2.1.5 The delay time value, t_d, subsequently shall be used to time-shift all the oxygen readings.

5.2.1.6 If the oxygen analyzer is equipped with an electric response time adjustment, it shall be set so that at turn-off there is just a trace of overshoot when switching rapidly between two different calibration gases.

5.2.1.7 Scan Timing.

5.2.1.7.1 The timing of the scans by the data collection system shall be calibrated with a timer accurate to within 1 second in 1 hour.

5.2.1.7.2 The data output shall show event times correct to within 3 seconds.

Copyright National Fire Protection Association
Provided by IHS under license with NFPA
No reproduction or networking permitted without license from IHS
Not for Resale

5.2.2 Operating Calibrations.

5.2.2.1 At the start of testing each day, the oxygen analyzer shall be zeroed and calibrated. For zeroing, the analyzer shall be fed with nitrogen gas using the same flow rate and pressure as for the sample gases.

5.2.2.2 Calibration shall be achieved similarly using ambient air and adjusting for a response of 20.95 percent.

5.2.2.3 Analyzer flow rates shall be monitored and set to be equal to the flow rate used when testing specimens.

5.2.2.4 After each specimen has been tested, a response level of 20.95 percent obtained using ambient air shall be verified.

5.3* Heat Release Calibration.

5.3.1 The heat release calibration shall be performed each day at the start of testing.

5.3.2 Methane with a purity of at least 99.5 percent shall be introduced into the calibration burner at a flow rate corresponding to 5 kW based on the net heat of combustion of methane (50.0×10^3 kJ/kg) using a precalibrated flowmeter. The flowmeter used shall be a dry test meter, a wet test meter, or an electronic mass flow controller.

5.3.3 If an electronic mass flow controller is used, it shall be calibrated periodically against a dry test meter or a wet test meter.

5.3.4 The test meter shall be equipped with devices to measure the temperature and pressure of the flowing gas so that appropriate corrections to the reading are made. If a wet test meter is used, the readings also shall be corrected for the moisture content.

5.3.5 The exhaust fan shall be set to the speed to be used for subsequent testing. The required calculations are provided in Chapter 8.

5.4* Load Cell Calibration. The load cell shall be calibrated with standard weights in the range of test specimen weight on each day of testing or when the load cell mechanical zero requires adjustment.

5.5* Smoke Meter Calibration. The smoke meter initially shall be calibrated to read correctly for two different value-neutral density filters and also at 100 percent transmission.

Chapter 6 Test Specimens

6.1* Specimen Size. Test specimens shall be 100 mm × 100 mm, shall be up to 50 mm thick, and shall be cut to be representative of the construction of the end-use product.

6.2 Specimen Testing. For testing, the sides and bottom of each of the specimens shall be wrapped in a single layer of aluminum foil (0.025 to 0.040 mm thick), with the shiny side facing the specimen.

6.2.1* Composite specimens shall be exposed in a manner typical of the end-use condition. They shall be prepared so that the sides are covered with the outer layer(s).

6.2.2* Composite and intumescing materials shall be mounted using techniques that hold them in place within the specimen holder during combustion. The exact mounting and retaining method used shall be specified in the test report.

6.3 Conditioning.

6.3.1 Specimens shall be conditioned to moisture equilibrium (constant weight) at an ambient temperature of 23°C ± 3°C and a relative humidity of 50 percent ± 5 percent.

6.3.2 Test specimens shall be tested within 10 minutes of removal from such conditions if the test conditions differ from those specified in 6.3.1.

Chapter 7 Test Procedure

7.1 Preparation.

7.1.1 Traps.

7.1.1.1 The CO_2 trap and the final moisture trap shall be checked.

7.1.1.2 The absorbents shall be replaced when they are no longer effective.

7.1.1.3 Any accumulated water in the cold trap separation chamber shall be drained.

7.1.1.4 The normal operating temperature of the cold trap shall be 0°C or lower.

7.1.2 Power. The power to the cone heater and the exhaust blower shall be turned on each test day. Power to the oxygen analyzer, load cell, and pressure transducer shall not be turned off on a daily basis.

7.1.3* Exhaust Flow. An exhaust flow rate at a value of 0.024 m^3/sec ± 0.002 m^3/sec shall be set.

7.1.4 Calibration. The required calibration procedures specified in Chapter 5 shall be performed.

7.1.5 Holder. An empty specimen holder with refractory blanket in place shall be placed in the horizontal orientation during warm-up and between tests to avoid excessive heat transmission to the load cell.

7.1.6 Ignition. Where external ignition is used, the spark plug holder shall be positioned in the location appropriate to the orientation being used.

7.2 Procedure.

7.2.1 When the test is ready to be performed, the empty specimen holder shall be removed.

7.2.2 The radiation shield shall be inserted, and the specimen, within the horizontal holder, shall be positioned in place. The holder shall initially be at room temperature.

7.2.3* The radiation shield shall remain in place until load cell equilibrium, but for no longer than 10 seconds total if the shield is not water-cooled.

7.2.4 Data Collection.

7.2.4.1 Data collection shall be initiated on removal of the radiation shield, which is the start of the test.

7.2.4.2 The data collection intervals shall be 2 seconds or less.

7.2.5 The ignition shall be conducted in the following sequence:

(1) Start the ignition timer.
(2) Move the spark igniter into place.
(3) Turn on the power to the spark igniter.

Copyright National Fire Protection Association
Provided by IHS under license with NFPA
No reproduction or networking permitted without license from IHS
Not for Resale

7.2.5.1 The sequence in 7.2.5 shall be accomplished within 2 seconds of the removal of the radiation shield.

7.2.6* Flaming.

7.2.6.1 When flashing or transitory flaming occurs, the times shall be recorded.

7.2.6.2 When flaming is sustained for a period of 4 seconds, the exceeding time at which the sustained flaming started shall be recorded, the spark igniter shall be turned off, and the spark ignition shall then be removed.

7.2.6.3 If the flame self-extinguishes in less than 60 seconds after the spark is turned off, the spark igniter shall be reinserted and shall be turned on.

7.2.6.3.1 If flaming reoccurs, the test shall be stopped, the test data shall be discarded, and the test shall then be repeated without removing the spark igniter until the entire test is completed.

7.2.6.3.2 The events described in 7.2.6.3.1 shall be included in the test report.

7.2.7 Data shall be collected until 2 minutes after any flaming or other signs of combustion cease, until the average mass loss over a 1-minute period has dropped below 150 g/m^2 or until 60 minutes have elapsed, whichever occurs first.

7.2.8 Holder.

7.2.8.1 The specimen holder shall be removed.

7.2.8.2 The empty specimen holder shall be replaced.

7.2.9* After the start of the test, if the specimen does not exhibit sustained flaming within 15 minutes, the test shall be ended. If sustained flaming was not observed, the report shall indicate that there was no ignition. *(See also Section 9.1.)*

7.2.10 Unless otherwise specified in the material or performance standard, three determinations shall be made and reported as specified in Chapter 9. The 180-second mean heat release rate readings shall be compared for the three specimens. If any of these mean readings differs by more than 10 percent from the average of the three readings, then an additional set of three specimens shall be tested. In such cases, the averages for the set of six readings shall be reported.

7.3 Safety Precautions.

7.3.1 The operator shall use protective gloves for insertion and removal of test specimens because the test procedures involve high-temperature and combustion processes and, therefore, hazards exist for burns, ignition of extraneous objects or clothing, and inhalation of combustion products. Neither the cone heater nor the associated fixtures shall be touched while hot except with the use of protective gloves.

7.3.2 The exhaust shall be checked for proper operation before testing and shall discharge into a building exhaust system with adequate capacity.

7.3.3 Provision shall be made for collecting and venting any combustion products that fail to be collected by the normal exhaust system of the apparatus.

Chapter 8 Calculations

8.1* General. The equations in this section shall assume that only O_2 is measured, as indicated on the gas analysis system in Figure 4.9.

8.2* Calibration Constant Using Methane.

8.2.1 The methane calibration shall be performed prior to the day's testing, to check for the proper operation of the instrument and to compensate for minor changes in mass flow determination.

8.2.2* The calibration constant, C, shall be determined from the following equation:

$$C = \frac{5.0}{1.10\left(12.54\times10^{3}\right)}\left(\frac{\sqrt{\Delta P}}{T_e}\right)\left[\frac{X_{O_2}^{0} - X_{O_2}(t)}{1.105 - 1.5X_{O_2}(t)}\right]$$

where:

5.0 = 5.0 kW of methane supplied
12.54×10^3 = the ratio $\Delta H_c / r_0$ for methane
1.10 = the ratio of oxygen to air molecular weight

8.3 Calculations for Test Specimen. The calculations in this section shall be used for various applications. The applicable material or performance standard shall be consulted for additional calculations.

8.3.1 Heat Release.

8.3.1.1 Prior to performing other calculations, the oxygen analyzer time shift shall be determined by the following equation:

$$X_{O_2}(t) = X_{O_2}^{1}\left(t + t_d\right)$$

8.3.1.2 The heat release rate then shall be determined by the following equation:

$$\dot{q}(t) = \frac{\Delta H_e}{r_0}(1.10)C\sqrt{\frac{\Delta P}{T_e}}\left[\frac{X_{O_2}^{0} - X_{O_2}(t)}{1.105 - 1.5X_{O_2}(t)}\right]$$

8.3.1.3 The value of $\Delta H_e/r_0$ for the test specimen shall be set to equal 13.1×10^3 kJ/kg, unless a more accurate value is known for the test material. The heat release rate per unit area shall be determined as follows:

$$q''(t) = \frac{q(t)}{A_s}$$

where:
A_s = 0.01 m^2

When the optimal retainer frame and wire grid as shown in Figure 4.6.4(a) and Figure 4.6.4(b) are used, A_s = 0.0088 m^2.

8.3.1.4 The total heat released during combustion, $\dot{q}''$, shall be determined by summation:

$$\dot{q}'' = \sum_i \dot{q}''i(t)\Delta t$$

8.3.1.4.1 The summation in 8.3.1.4 shall begin with the first reading after the last negative rate of heat release reading that occurs at the beginning of the test and shall continue until the final reading recorded for the test.

8.3.2 Mass Loss Rate and Effective Heat of Combustion.

8.3.2.1 The required mass loss rate, $-dm/dt$, shall be computed at each time interval using five-point numerical differentiation. The following equations shall be used:

Copyright National Fire Protection Association
Provided by IHS under license with NFPA
No reproduction or networking permitted without license from IHS
Not for Resale

(1) For the first scan ($i = 0$):

$$-\left(\frac{dm}{dt}\right)_{i=0} = \frac{25m_0 - 48m_1 + 36m_2 - 16m_3 + 3m_4}{12\Delta t}$$

(2) For the second scan ($i = 1$):

$$-\left(\frac{dm}{dt}\right)_{i=1} = \frac{3m_0 + 10m_1 - 18m_2 + 6m_3 - m_4}{12\Delta t}$$

(3) For any scan for which $1 < i < n-1$ (n = total number of scans):

$$-\left(\frac{dm}{dt}\right)_{i} = \frac{-m_{i-2} + 8m_{i-1} - 8m_{i+1} + m_{i+2}}{12\Delta t}$$

(4) For the next to the last scan ($i = n - 1$):

$$-\left(\frac{dm}{dt}\right)_{i=n-1} = \frac{-10m_n - 3m_{n-1} + 18m_{n-2} - 6m_{n-3} + m_{n-4}}{12\Delta t}$$

(5) For the last scan ($i = n$):

$$-\left(\frac{dm}{dt}\right)_{i=n} = \frac{-25m_n + 48m_{n-1} - 36m_{n-2} + 16m_{n-3} - 3m_{n-4}}{12\Delta t}$$

8.3.2.2 The average effective heat of combustion shall be determined as follows, with the summation taken over the entire test length:

$$\Delta H_{c,eff} = \frac{\Sigma_i \dot{q}_i(t)\Delta t}{m_i - m_f}$$

8.3.2.2.1 A time-varying value also shall be determined as follows:

$$\Delta H_{c,eff}(t) = \frac{\dot{q}_i(t)}{-(dm/dt)}$$

8.3.3 Smoke Obscuration.

8.3.3.1 The extinction coefficient, k, shall be determined by the smoke meter electronics as follows:

$$k = \left(\frac{1}{L}\right)\ln\left(\frac{I_0}{I}\right)$$

8.3.3.2 The average specific extinction area obtained during the test shall be as follows:

$$\sigma_{f(avg)} = \frac{\Sigma_i v_i k_i \Delta t_i}{m_i - m_f}$$

Chapter 9 Report

9.1 Required Information. The test report shall include the following information unless otherwise specified in the relevant material or performance standard:

(1) Specimen identification code or number.
(2) Manufacturer or submitter.
(3) Date of test.
(4) Operator.
(5) Composition or generic identification.
(6) Specimen thickness.
(7) Specimen mass.
(8) Specimen color(s) and description.
(9) Details of specimen preparation by the testing laboratory.
(10) Test orientation, specimen mounting, and whether the retainer frame, the wire grid, or other special mounting procedure was used.
(11) Heating flux and exhaust system flow rate.
(12) Number of replicate specimens tested under the same conditions. A minimum of three specimens shall be tested, unless exploratory testing only is intended.
(13) Time to sustained flaming(s). If sustained flaming was not observed during the test *(see 7.2.9)*, the report shall state "No ignition."
(14) Heat release rate (per unit area) curve (kW/m^2).
(15)*Peak $\dot{q}''$ and average $\dot{q}''$ values for the first 60 seconds, 180 seconds, and 300 seconds after ignition or for other appropriate periods. For specimens that do not show sustained flaming, the above quantities, tabulated for periods beginning with the first reading after the last negative rate of heat release reading that occurs at the beginning of the test, shall be reported.
(16) Total heat released by the specimen (MJ/m^2). The total heat shall be computed beginning with the first reading after the last negative rate of heat release reading that occurs at the beginning of the test and continuing until the final reading recorded for the test.
(17) Average $\Delta H_{c,eff}$ for the entire test (MJ/kg).
(18) Curve of $\Delta H_{c,eff}$ (MJ/kg). This information is optional.
(19) Mass remaining after test (g).
(20) Sample mass loss (kg/m^2), which is the average specimen mass loss rate (g/m^2·sec) computed over the period that begins when 10 percent of the ultimate specimen mass loss occurs and that ends when 90 percent of the ultimate specimen mass loss occurs.
(21) Smoke obscuration, which shall be reported as the average specific extinction area (m^2/kg).
(22) Values determined for Sections 9.1(12), 9.1(15), 9.1(16), and 9.1(20), averaged for all specimens.
(23) Additional observations, including times of transitory flaming or flashing, if any.
(24) Difficulties encountered in testing, if any.
(25) Duration of test and the criteria used to end the test.
(26) Data recording interval(s).
(27) Calculation method used for heat release.

Annex A Explanatory Material

Annex A is not a part of the requirements of this NFPA document but is included for informational purposes only. This annex contains explanatory material, numbered to correspond with the applicable text paragraphs.

A.1.1.1 Conducting tests without piloted ignition is best kept for research and development.

This method is similar to the test method contained in ASTM E 1354, *Standard Test Method for Heat and Visible Smoke Release Rates for Materials and Products Using an Oxygen Consumption Calorimeter (Cone Calorimeter)*, and in ISO 5660, *Reaction-to-Fire Tests — Heat Release, Smoke Production and Mass Loss Rate — Part 1: Heat Release Rate (Cone Calorimeter Method)*.

A.1.1.3 Testing of materials in the horizontal orientation is preferred, especially for regulatory purposes, because such testing is much more reproducible and repeatable than test-

--`,,,,,,-`-`,,`,,`,`,,`---

Copyright National Fire Protection Association
Provided by IHS under license with NFPA
No reproduction or networking permitted without license from IHS
Not for Resale

ing performed in the vertical orientation and generally appears to provide a more severe exposure condition. When vertical orientation is used, it is more difficult to control the pyrolysates that evolve from the material's surface for the purpose of external ignition using the point source spark ignition. Convective heat flow along the exposed surface of the sample is also a complicating factor.

A.1.2.1 The relationship of the behavior of materials and products to radiant heat flux exposure is determined by testing specimens in a series of exposures over as broad a range of incident radiant heat fluxes as possible.

A.1.3.2 Testing of materials in the horizontal orientation is preferred, especially for regulatory purposes, because such testing is much more reproducible and repeatable than testing performed in the vertical orientation and generally appears to provide a more severe exposure condition. When vertical orientation is used, it is more difficult to control the pyrolysates that evolve from the material's surface for the purpose of external ignition using the point source spark ignition. Convective heat flow along the exposed surface of the sample is also a complicating factor.

A.1.3.2.1 Specimens having nonplanar surfaces can be tested by this method, but it is not known if the results will be comparable to planar surfaces. In 4.2.5, this method specifies that the irradiance over the center 50 mm × 50 mm of the test specimen be uniform to within 10 percent of the target irradiance. Surface irregularities, such as pitted, pocked, tufted, textured, or uneven surfaces, on otherwise planar specimens or curved, undulating, or corrugated surfaces may be suitable. The conditions of such surfaces should be clearly described in the test report.

A.1.3.2.4 It cannot be assumed that the behavior of materials tested in accordance with this method will be replicated in an actual fire. The response of a material to a real fire is affected by many factors, including the specific end use of the material, the environment in which it is used, and the fire condition to which it might be exposed.

A.1.3.3.4 Additional information on testing is provided in Annex E.

A.1.3.3.7 Additional information on heating flux and the use of external ignition can be found in E.2.3.

A.3.3.1.2 Net Heat of Combustion. For additional information, see ASTM D 3286, *Standard Test Method for Gross Calorific Value of Coal and Coke by the Isoperibol Bomb Calorimeter.*

A.4.2.3 Because the geometry of the heater is critical, the dimensions shown in Figure 4.1.2 should be adhered to closely.

A.4.6.2 A suitable method for adjusting the distance between the bottom surface of the cone heater and the top surface of the specimen is to use a sliding cone height adjustment, if provided, as shown in Figure 4.1.2.

A.4.9 The removal of CO_2 produces water, which should be removed. If an optional CO_2 analyzer is used instead of removing CO_2 from the oxygen analyzer stream, the equations used to calculate the rate of heat release are different from those for the standard case indicated in Chapter 8. The appropriate equations are provided in Annex C.

A.5.3 Calibration can be permitted to be performed with or without the cone heater operating but should not be performed during heater warm-up.

A.5.4 The load cell mechanical zero might have to be adjusted when an edge or retainer frame is used or if the apparatus was not last used in the horizontal orientation.

A.5.5 Once this calibration is set, only the zero value of the extinction coefficient (100 percent transmission) normally needs to be verified prior to each test.

A.6.1 For products of thickness greater than 50 mm, the requisite specimens should be obtained by cutting away the unexposed face to reduce the thickness to 50 mm.

A.6.2.1 It should also be acceptable for composite specimens to be otherwise protected from direct exposure.

A.6.2.2 Such mounting techniques include the use of an edge or retainer frame as shown in Figure 4.6.4(a), wire grid, or other special mounting procedure suitable to the specimen being tested. Figure 4.6.4(b) shows a wire grid suitable for several types of intumescing specimens.

Assemblies should be tested as specified in 6.2.1, or, alternatively, they should be tested using the concepts described herein, as appropriate.

Where the product is a material or composite that is normally attached to a well-defined substrate, it should be tested in conjunction with that substrate, using the recommended fixing technique, for example, bonded with the appropriate adhesive or mechanically fixed.

When assemblies fabricated with composites or with thin materials are tested, the presence of an air gap and the nature of any underlying construction are factors with significant potential to affect the ignition and burning characteristics of the exposed surface. Care should be taken to ensure that the test result obtained on any assembly is relevant to its use in practice.

Thin specimens should be tested with a substrate representative of end-use conditions, such that the total specimen thickness is 3 mm or greater.

Thin specimens that are used with an air space adjacent to the unexposed face should be mounted so that there is an air space of at least 12 mm between its unexposed face and the refractory fiber blanket. This is achieved by the use of a metal spacer frame.

A.7.1.3 Under room temperature conditions, this volume flow rate corresponds to a mass flow rate of approximately 30 g/sec.

A.7.2.3 The radiation shield should remain in place for a sufficient time to ensure stability of operation.

A.7.2.6 The time of sustained flaming to be reported is the time at which the flaming initially is observed, not when the 4-second period that defines sustained flaming has elapsed.

A.7.2.9 Testing should be stopped if explosive spalling or excessive swelling occurs. The procedures described in Chapter 7 might be useful in mitigating these effects.

A.8.1 Appropriate equations for cases where additional gas analysis equipment (CO_2, CO, H_2O) is used are provided in Annex C.

A.8.2 A calibration differing more than 5 percent from the previous calibration is not normal and suggests instrument malfunction.

A.8.2.2 The other variables are as provided in Section 1.5.

A.9.1(15) Certain specimens do not show visible, sustained flaming but do indicate positive rate-of-heat-release values.

Copyright National Fire Protection Association
Provided by IHS under license with NFPA
No reproduction or networking permitted without license from IHS
Not for Resale

Annex B Precision and Bias

This annex is not a part of the requirements of this NFPA document but is included for informational purposes only.

B.1 Precision.

B.1.1 Interlaboratory trials were conducted by ASTM Committee E.5 to determine the repeatability and reproducibility of this test method. The results were analyzed in conjunction with the results of a parallel set of interlaboratory trials sponsored by the International Organization for Standardization (ISO). The complete results have been placed on file at ASTM headquarters as the research report RR:E05-1008, *Report to ASTM on Cone Calorimeter Inter-Laboratory Trials*. The results obtained for repeatability and reproducibility are provided in B.1.2 and B.1.3; further details of the interlaboratory trials are provided in Section B.2.

B.1.2 The following definitions of repeatability (r) and reproducibility (R) should be used:

$$r = f\sqrt{2\sigma_r}$$
$$R = f\sqrt{2\sigma_R}$$

where:
σ_r = repeatability standard deviation
σ_R = reproducibility standard deviation

The coefficient $\sqrt{2}$ derived from the fact that r and R refer to the difference between two single test results, and f, which equals approximately 2, corresponds to the probability level of 95 percent being taken. These products then are rounded off as follows:

$$r = 2.8S_r$$
$$R = 2.8S_R$$

For calculations, the sample-based standard deviation estimates, S, are substituted for the population standard deviations, σ, since the latter are not known.

B.1.3 For the materials tested, values for repeatability, r, and reproducibility, R, have been calculated for six variables. These variables, chosen as representative of the test results, are as follows:

$$t_{ig}, \dot{q}''_{max}, \dot{q}''_{180}, \dot{q}''_{tot}, \Delta H_{c,eff}, \sigma_f$$

A linear regression model was used to describe r and R as a function of the mean overall replicates and overall laboratories for each of the six variables. The regression equations are provided. The range of mean values over which the fit was obtained is also indicated. The results for time to sustained flaming, t_{ig}, in the range of 5 seconds to 150 seconds were as follows:

$$r = 4.1 + 0.125t_{ig}$$
$$R = 7.4 + 0.220t_{ig}$$

The results for peak heat release rate, $\dot{q}''_{max}$, in the range of 70 kW/m^2 to 1120 kW/m^2 were as follows:

$$r = 13.3 + 0.131\dot{q}''_{max}$$
$$R = 60.4 + 0.141\dot{q}''_{max}$$

The results for 180-second average heat release rate, $\dot{q}''_{180}$, in the range of 70 kW/m^2 to 870 kW/m^2 were as follows:

$$r = 23.3 + 0.137\dot{q}''_{180}$$
$$R = 25.5 + 0.151\dot{q}''_{180}$$

The results for total heat released, $\dot{q}''_{tot}$, for the range of 5 MJ/m^2 to 720 MJ/m^2 were as follows:

$$r = 7.4 + 0.068\dot{q}''_{tot}$$
$$R = 11.8 + 0.088\dot{q}''_{tot}$$

The results for peak effective heat of combustion, $\Delta H_{c,eff}$, in the range of 7 kJ/g to 40 kJ/g were as follows:

$$r = 1.23 + 0.050\Delta H_{c,eff}$$
$$R = 2.42 + 0.055\Delta H_{c,eff}$$

The results for average specific extinction area, σ_f, in the range of 30 m^2/kg to 2200 m^2/kg were as follows:

$$r = 59 + 0.076\sigma_f$$
$$R = 63 + 0.215\sigma_f$$

B.2 Bias. For solid specimens of unknown chemical composition, as used in building materials, furnishings, and common occupant fuel load, it has been documented that the use of the oxygen consumption standard value of $\Delta H_c/r_0 = 13.1 \times 10^3$ kJ/kg oxygen results in an expected error band of 5 percent compared to true value. For homogeneous materials with only a single pyrolysis mechanism, this uncertainty can be reduced by determining ΔH_c from oxygen bomb measurements and r_0 from ultimate elemental analysis. For most testing, this is not practical, because specimens might be composite and nonhomogeneous and might exhibit several degradation reactions. Therefore, for unknown samples, a 5 percent accuracy limit is recommended. For reference materials, however, careful determination of $\Delta H_c/r_0$ can reduce this source of uncertainty substantially.

Annex C Calculation of Heat Release with Additional Gas Analysis

This annex is not a part of the requirements of this NFPA document but is included for informational purposes only.

C.1 Introduction. The equations used to calculate heat release rate assume CO_2 is removed from the gas sample in a chemical scrubber before O_2 is measured. Some laboratories are equipped to measure CO_2; in such a case, it is not necessary to remove the CO_2 from the O_2 line. The advantage in this case is that the chemical scrubbing agent, which is costly and necessitates careful handling, can be avoided.

In this annex, equations are provided that should be used when CO_2 is measured but not scrubbed out of the sampling lines. Two cases are considered. In the first case, part of the dried and filtered sample stream is diverted into infrared CO_2 and CO analyzers. To avoid condensation, the measurement of H_2O concentration in the flow of combustion products necessitates a separate sampling system with heated filters, heated sampling lines, and a heated analyzer.

Copyright National Fire Protection Association
Provided by IHS under license with NFPA
No reproduction or networking permitted without license from IHS
Not for Resale

C.2 Symbols. The following symbols are used in this annex:

C	=	calibration constant for oxygen consumption analysis ($m^{1/2}kg^{1/2}K^{1/2}$)
$\Delta H_c/r_0$	=	net heat of combustion (kJ/kg)
M_a	=	molecular weight of air (kg/kmol)
M_e	=	molecular weight of the combustion products (kg/kmol)
$\dot{m}_e$	=	exhaust duct mass flow rate (kg/sec)
ΔP	=	orifice meter pressure differential (Pa)
$\dot{q}''$	=	heat release rate per unit area (kW/m^2)
t_d	=	oxygen analyzer delay time (sec)
t_d^1	=	delay time of the CO_2 analyzer (sec)
t_d^2	=	delay time of the CO analyzer (sec)
t_d^3	=	delay time of the H_2 analyzer (sec)
T_e	=	absolute temperature of gas at the orifice meter (K)
$X_{CO_2}^0$	=	initial CO_2 reading (mole fraction)
X_{CO}^0	=	initial CO reading (mole fraction)
$X_{H_2O}^0$	=	initial H_2O reading (mole fraction)
$X_{O_2}^a$	=	ambient O_2 reading (mole fraction)
$X_{CO_2}^1$	=	CO_2 reading before delay time correction (mole fraction)
X_{CO}^1	=	CO reading before delay time correction (mole fraction)
$X_{H_2O}^1$	=	H_2O reading before delay time correction (mole fraction)
X_{CO_2}	=	CO_2 reading after delay time correction (mole fraction)
X_{CO}	=	CO reading after delay time correction (mole fraction)
X_{H_2O}	=	H_2O reading after delay time correction (mole fraction)
ϕ	=	oxygen depletion factor

C.3 Where CO_2 and CO Are Measured. As in the case of the oxygen analyzer, measurements of CO_2 and CO should be time-shifted to take into account the transport time in the sampling lines, as follows:

$$X_{O_2}(t) = X_{O_2}^1\left(t + t_d\right)$$
$$X_{CO_2}(t) = X_{CO_2}^1\left(t + t_d^1\right)$$
$$X_{CO}(t) = X_{CO}^1\left(t + t_d^2\right)$$

C.3.1 In this case, the delay times, t_d^1 and t_d^2, for the CO_2 and CO analyzers, respectively, are usually different (smaller) than the delay time, t_d, for the O_2 analyzer.

The exhaust duct flow is calculated as follows:

$$\dot{m}_e = C\sqrt{\frac{\Delta P}{T_e}}$$

C.3.2 The rate of heat release now can be determined as follows:

$$\dot{q} = 1.10\left(\frac{\Delta H_c}{r_0}\right)X_{O_2}^a\left[\frac{\phi - 0.1721 - \phi\left(X_{CO}/X_{CO_2}\right)}{(1-\phi)+1.105\phi}\right]\dot{m}_e$$

C.3.3 The oxygen depletion factor, ϕ, is calculated as follows:

$$\phi = \frac{X_{O_2}^0\left(1 - X_{CO_2} - X_{CO}\right) - X_{O_2}\left(1 - X_{CO_2}^0\right)}{X_{O_2}^0\left(1 - X_{CO_2} - X_{CO} - X_{O_2}\right)}$$

C.3.4 The ambient mole fraction of oxygen is calculated as follows:

$$X_{O_2}^a = \left(1 - X_{H_2O}^0\right)X_{O_2}^0$$

The second value in the denominator of the value in brackets in the equation in C.3.2 is a correction factor for incomplete combustion of some carbon to CO instead of CO_2. In fact, the value of X_{CO} is usually very small, so it can be disregarded in the equations in C.3.2 and C.3.3. The practical implication of this correction factor is that a CO analyzer generally does not result in a noticeable increase in accuracy of heat release rate measurements. Consequently, the equations can be used, even if no CO analyzer is present, by setting $X_{CO} = 0$.

C.4 Where H_2O Also Is Measured. In an open combustion system, such as is used in this method, the flow rate of air entering the system cannot be measured directly but is inferred from the flow rate measured in the exhaust duct. An assumption regarding the expansion due to combustion of the fraction of the air that is fully depleted of its oxygen needs to be made. This expansion depends on the composition of the fuel and the actual stoichiometry of the combustion. A suitable average value for the volumetric expansion factor is 1.105, which is accurate for methane.

This value is already incorporated in the equation in C.3.2 for $\dot{q}$. For cone calorimeter tests, it can be assumed that the exhaust gases consist primarily of N_2, O_2, CO_2, H_2O, and CO; thus, measurements of these gases can be used to determine the actual expansion. (It is assumed that the measurements of O_2, CO_2, and CO correspond to a dry gas stream, while the H_2O measurement corresponds to total stream flow.) The mass flow rate in the exhaust duct is then more accurately provided by the following equation:

$$\dot{m}_e = \sqrt{\frac{M_e}{M_a}}C\sqrt{\frac{\Delta P}{T_e}}$$

C.4.1 The molecular weight, M_e, of the exhaust gases is calculated as follows:

$$M_e = \left[4.5 + \left(1 - X_{H_2O}\right)\left(2.5 + X_{O_2} + 4X_{CO_2}\right)\right]4$$

C.4.2 Using 28.97 as the value for M_a, the heat release rate is calculated as follows:

$$\dot{q}(t) = 1.10\left(\frac{\Delta H_c}{r_0}\right)\left(1 - X_{H_2O}\right)\left[\frac{X_{O_2}^0\left(1 - X_{O_2} - X_{CO_2}\right)}{1 - X_{O_2}^0 - X_{CO_2}^0} - X_{O_2}\right]\dot{m}_e$$

Copyright National Fire Protection Association
Provided by IHS under license with NFPA
No reproduction or networking permitted without license from IHS
Not for Resale

C.4.3 The H_2O readings used in the equation in C.4.2 are time-shifted in a way similar to that for the equations in Section C.3 for the other analyzers:

$$X^0_{H_2O}(t) = X^1_{H_2O}\left(t + t^3_d\right)$$

Additional background on these computations is given in Twilley and Babrauskas, "User's Guide for the Cone Calorimeter."

Annex D Testing of Specimens in the Vertical Orientation

This annex is not a part of the requirements of this NFPA document but is included for informational purposes only.

D.1 Introduction. This annex is provided so that the user of this standard has access to a standardized methodology for testing specimens in a vertical orientation using the same apparatus specified in this standard. Although the recommended method of testing specimens is in the horizontal orientation, especially for the purpose of regulating the use of materials, it is believed that testing specimens in the vertical orientation might be useful for research and development purposes. With time and experience, this method of testing might be found suitable for more widespread use.

D.2 Purpose. This test method allows testing of the specimen in the vertical position.

D.3 Basis of Test Method. This alternative test method using the vertical orientation of the test specimen is based on the text in Chapters 1 through 9. To accommodate the vertical orientation of the specimen, the wording has been revised as necessary, and section and paragraph numbers in parentheses have been provided for quick reference.

D.4 Test Limitations.

D.4.1 *(See 1.3.2.)* The test data should be considered to be invalid if any of the following occurs:

(1) The specimen experiences an explosive spalling.
(2) The specimen swells to the point where it touches the spark plug prior to ignition.
(3) The specimen swells to the point where it touches the heater base plate during combustion.
(4) In the vertical orientation, the specimen melts sufficiently to overflow the melt trough.

D.4.2 If delamination of the specimen occurs, the test results should be considered suspect, and this should be described in the test report.

D.5 Exposure. *(See 1.3.3.5.)* Specimens should be exposed to heating fluxes ranging from 0 kW/m^2 to 100 kW/m^2 in a vertical orientation. External ignition, where used, should be by electric spark. The value of the heating flux and the use of external ignition should be specified by the relevant material or performance standard *(see E.2.3)* or by the test sponsor for research and development purposes.

D.6 Definition.

D.6.1 Orientation. *(See 3.3.5.)* The plane in which the exposed face of the specimen is located during testing (i.e., vertically facing the heater).

D.7 Test Apparatus. *(See Section 4.1.)* The test apparatus should consist of the following components:

(1) A conical-shaped radiant electric heater
(2) Specimen holders
(3) An exhaust gas system with oxygen-monitoring and flow-measuring instrumentation
(4) An electric ignition spark plug
(5) A data collection and analysis system
(6) A load cell for measuring specimen mass loss

A general view of the apparatus is shown in Figure 4.1.1, and an exploded view of the vertical orientation is shown in Figure D.7.

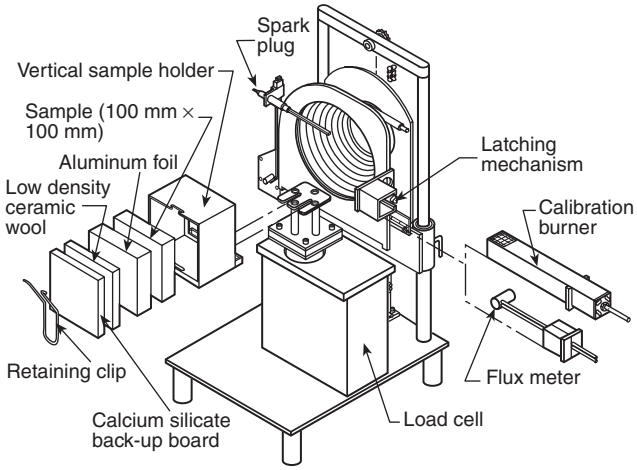

FIGURE D.7 Exploded View, Vertical Orientation, of Apparatus.

D.8 Heater. *(See 4.2.3.)* The heater should be mounted in a vertical orientation. The heater should be capable of producing irradiances on the surface of the specimen of up to 100 kW/m^2. The irradiance should be uniform within the central 50 mm × 50 mm area of the specimen to within 10 percent.

D.9 Specimen Holder. *(See 4.6.1.)* The vertical specimen holder is shown in Figure D.9 and includes a small drip trap to contain a limited amount of molten material. A specimen should be installed in the vertical specimen holder by backing it with a layer of refractory fiber blanket (nominal density 65 kg/m^3). The thickness of the refractory fiber blanket depends on the specimen's thickness but should be at least 13 mm. A layer of rigid, ceramic fiber millboard should be placed behind the fiber blanket layer. The millboard thickness should be such that the entire assembly is rigidly bound together once the retaining spring clip is inserted behind the millboard. In the vertical orientation, the cone heater height should be set so the center of the heater lines up with the specimen center.

D.10 Ignition Circuit. *(See Section 4.7.)* External ignition should be accomplished by a spark plug powered from a 10 kV transformer or by a 10 kV spark generator. The length and location of the spark plug or spark generator electrode should be such that the spark has a gap of 3 mm and that the spark gap is located 5 mm above the top of the holder and in the plane of the specimen face in the vertical orientation. If a spark plug and transformer are used, the transformer should

Copyright National Fire Protection Association
Provided by IHS under license with NFPA
No reproduction or networking permitted without license from IHS
Not for Resale

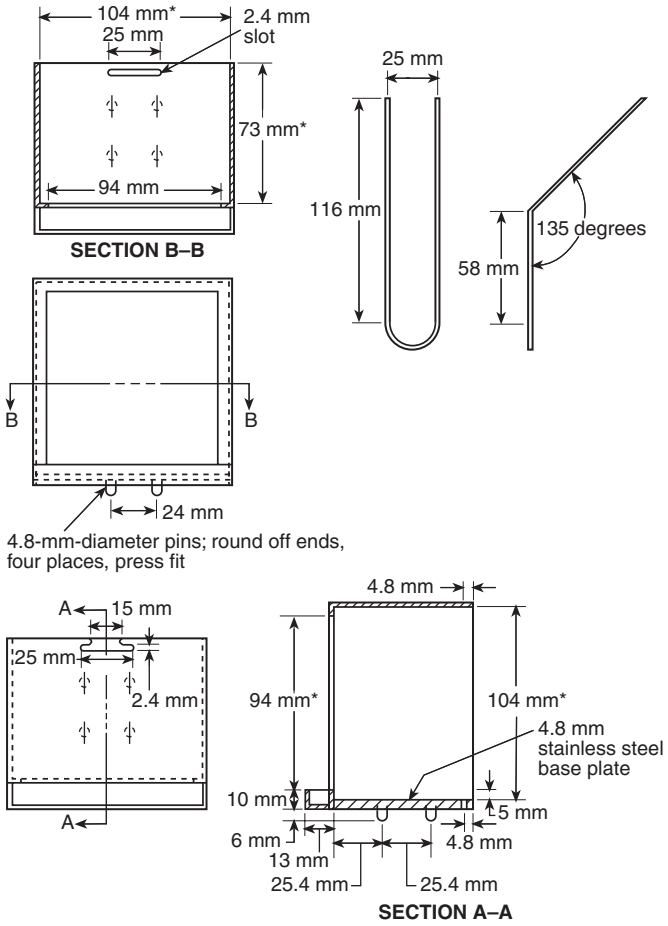

FIGURE D.9 Vertical Specimen Holder.

be of a type specifically designed for spark ignition use. The transformer should have an isolated (ungrounded) secondary to minimize interference with the data transmission lines. The igniter should be removed when sustained flaming is achieved for a period of 4 seconds.

Annex E Commentary

This annex is not a part of the requirements of this NFPA document but is included for informational purposes only.

E.1 Introduction. This commentary is provided for the following reasons:

(1) To furnish some insight into the development of the method
(2) To describe the rationale for the design of various features of the apparatus
(3) To describe the use of the data

Additional guidance to the user of this test is provided in reference note 1 *(see Section E.11)*.

E.2 Rate of Heat Release Measurements.

E.2.1 The rate of heat release of a product is one of the most important variables in determining the potential hazard of the product in a fire. With many products that are composed of many surfaces contributing to a fire, their evaluation is complex.[2] For each separate surface, it first should be determined when, if at all, that surface can ignite. The size of the fire should be determined from any items already burning, because this constitutes the external irradiance to nearby items. The flame spread over the surface in question then should be evaluated. The rate of heat release from the whole surface then can be evaluated using the rate of heat release per unit area, for a given irradiance, as a function of time. The rate of heat release per unit area is the only value that can be measured in a bench scale test. The total heat release rate output from the burning object equals the sum of the rates for all surfaces. The fact that some elements might burn out and no longer contribute to the fire also should be considered. The procedure is conceptually straightforward but can be cumbersome to compute.

E.2.2 Many common combustibles do not have the geometrically simple surfaces that are necessary to do computations of this kind. Other complications, such as melting, dripping, or collapsing, also can preclude a detailed mathematical analysis. In such cases, a simpler, more empirical model is appropriate. An example of the use of bench-style heat release rate measurements in deriving a fire hazard assessment is available.[3]

E.2.3 The test method does not prescribe the irradiance levels or whether external ignition should be used. This should be determined separately for each product class. For a given class of applications and products, a comparison with some full-scale fires generally is necessary to determine the time period over which the heat release rate should be calculated. A material or performance standard then can be developed for that product category that can provide further guidance and limitations for testing. For exploratory testing, in the absence of more specific determinations for a given class of applications, a value of 35 kW/m^2 can be permitted to be utilized first. The results obtained might then suggest whether additional testing at different irradiance levels should be performed.

Studies to address the degrees of combustibility of building materials have been performed by Forintek Canada Corporation and Underwriters' Laboratories of Canada (ULC). These studies suggest that an irradiance level of 50 kW/m^2 for an exposure period of 15 minutes might be appropriate for regulatory purposes, whereas the National Institute of Standards and Technology (NIST) research suggests a level of 75 kW/m^2 for 10 minutes.[4,5]

E.3 Choice of Operating Principles.

E.3.1 A number of apparatus have been developed over the years for measuring the rate of heat release; most of these have been reviewed in detail.[6] Traditionally, the simplest measurement scheme is a direct measurement of flow enthalpy from a chamber thermally insulated to create an adiabatic environment. A truly adiabatic apparatus, with the use of guard heaters, is possible but, because of the expense, has not been implemented. A simply insulated combustion chamber leads to a significant undermeasurement of the heat release, so that only an empirical calibration is possible. An example of such an insulated chamber method is described in ASTM E 906, *Standard Test Method for Heat and Visible Smoke Release Rates for Materials and Products*. Furthermore, that calibration could be sensitive to the radiant fraction

--`,,,,,,-`-`,,`,,`,`,,`---
Copyright National Fire Protection Association
Provided by IHS under license with NFPA
No reproduction or networking permitted without license from IHS
Not for Resale

(or sootiness) of the combustion products.[7,8] A more advanced scheme is an isothermal rather than an adiabatic instrument, with the heat release rate defined as that which is supplied by a substitution burner to maintain isothermal conditions.[9] This scheme provides better results, because only second-order heat loss error terms remain; however, its practical implementation is complex and costly.

E.3.2 It can be concluded that it is difficult to measure heat directly without some heat loss. However, it is simple to capture all combustion products without losing any heat and to measure the oxygen concentration in that stream. Heat release can be computed from such measurements with the availability of the oxygen consumption principle.[10] This principle states that for most common combustibles, an amount of heat equal to 13.1×10^3 kJ is released for each kilogram of oxygen consumed from the airstream. This constant varies only about 5 percent for most common combustibles; some exceptions are known.[10] The method remains useful even if a significant fraction of the products become CO or soot, rather than CO_2; in these cases, correction terms can be applied.[10,11] A typical case, involving cellulose-producing CO from 10 percent incomplete combustion, has been analyzed with less than 2 percent error.[10] It should be noted that excessively high CO produced as a result of restricted oxygen supply cannot occur in the calorimeter used in this test method, because oxygen intake is not restricted. By adopting the oxygen consumption principle as the method of measurement, it is possible to design an apparatus of significantly improved precision but without excessive complexity. Because heat measurements are not necessary, the apparatus does not need thermal insulation.

E.4 Heater Design.

E.4.1 Experience with various rate of heat release techniques suggests that, for minimal errors in irradiance, the specimen should be exposed to only the following:

(1) A thermostatically controlled heater
(2) A water-cooled plate
(3) Open air

If nearby solid surfaces are not temperature controlled, the surface temperatures can rise due to specimen flame heating and then act as additional sources of radiation to the specimen. Furthermore, where oxygen consumption is used as the measurement principle, a gas-fired heater should not be used because it can cause fluctuations in the oxygen readings (even though fluctuations can be removed by steady-state measurements).

E.4.2 A heater in the shape of a truncated cone first was explored for use in an ignitibility apparatus by the International Organization for Standardization (ISO).[12] The heater adopted in the current method is similar, but not identical, to the ISO cone. The main differences include higher heat fluxes, temperature control, and more rugged design details. In the horizontal orientation, the conical shape approximately follows the fire plume contours, while the central hole allows the stream to emerge without affecting the heater. A thick layer of cool air is pulled along, and the flames do not attach to the side of the cone. The central hole has an additional function: Without the hole, the middle of the specimen would receive a higher irradiance than the edges. With the hole, the irradiance is uniform to within 2 percent. In the vertical orientation, the hole still serves the purpose of providing radiation uniformity although, because of the presence of a natural convection boundary layer, the deviations are higher (from 5 percent to 10 percent).[13]

E.5 Pilot Ignition. Ignition of test specimens in many apparatus is achieved by a gas pilot. This method tends to pose difficulties such as sooting, deterioration of orifices, and contribution to the heat release rate. It is difficult to design a pilot that is centrally located over the specimen, is resistant to blowout, and yet does not apply an additional heat flux to the specimen. (A point of elevated heating on the specimen makes it mathematically difficult to analyze the response of the specimen.) An electric spark is free of most of these difficulties, needing only occasional cleaning and adjustment of the electrodes. For these reasons, an electric spark ignition is recommended.

E.6 Back Face Conditions. The heat loss through the specimen back face can have an influence on the burning rate near the end of the burning time of the back face. For reproducible measurements, the losses through the back face should be standardized. The simplest theoretical boundary conditions — an adiabatic or an isothermal boundary at ambient temperature — are not achievable. However, a reasonable approximation of the former can be made by using a layer of insulating material. This is easier to achieve for the horizontal orientation, in which case a very low density refractory blanket is used. In the vertical orientation, some structural rigidity of the backing is desired; consequently, a layer of high density backing might be necessary.

E.7 Oxygen Analyzer. The analyzer should be of the paramagnetic type, with baseline noise and short-term drift of approximately 50 ppm O_2 or less. Other types of analyzers (e.g., electrochemical and catalytic) generally cannot meet this recommendation. Paramagnetic analyzers also exhibit a linear response. The linearity is normally better than can be determined with 0.1 percent O_2/N_2 gas mixtures. Because an oxygen analyzer is sensitive to stream pressures, either the readings should be compensated with an absolute pressure transducer connected to the analyzer or the pressure should be mechanically regulated for flow fluctuations and atmospheric pressure variations. The analyzer and the pressure-regulating or -measuring devices should be located in a constant-temperature environment to avoid flow errors.

E.8 Limits to Resolution.

E.8.1 Methane calibration studies showed typical fluctuations of 1.5 percent, with a linearity to within 5 percent over the range of 5 kW to 12 kW.[13] Calibrations with other gases show similar results. Calibration gases can be delivered to the burner in a highly steady manner. The uniformity of solid fuels' combustion, however, is governed by the pyrolysis at the surface and, under some circumstances, shows substantial fluctuations. For instance, the fluctuations for poly (methyl methacrylate) are greater than for red oak.[13] Burning thermoplastic specimens occasionally eject individual molten streamers. With solid materials, the limits to resolution can be expected to be set by the specimen pyrolysis process, rather than by instrument limits.

E.8.2 The limits to the speed of any heat release rate technique are set by the slowest-responding element. In the case of the current method, that element is the oxygen analyzer, which typically shows a 10 percent to 90 percent response time of 6.9 seconds. The response times of the pressure transducer and the thermocouple can be much quicker. They should be set only slightly faster, however, to avoid introducing instrument noise without increasing resolution.

Copyright National Fire Protection Association
Provided by IHS under license with NFPA
No reproduction or networking permitted without license from IHS
Not for Resale

E.9 Effective Heat of Combustion. The effective heat of combustion is a constant during the combustion of homogeneous specimens having only a single mode of degradation and is less than the value of the theoretical net heat of combustion. Most organic liquids have a single mode of degradation and, therefore, a constant effective heat of combustion. By contrast, cellulosic products typically show more than one mode of degradation and varying effective heat of combustion. For materials having more than one mode of degradation or for composites or nonhomogeneous materials, the effective heat of combustion is not necessarily constant.

E.10 Smoke Obscuration Measurements.

E.10.1 The smoke measurement system is different from that used in NFPA 258, *Recommended Practice for Determining Smoke Generation of Solid Materials*, for the following reasons:

(1) Simultaneous mass measurements are available.
(2) Irradiances up to 100 kW/m^2 are available.
(3) The combustion takes place in a flow stream, not in a closed box.
(4) A monochromatic light source is used.

E.10.2 Accurate measurement of smoke obscuration requires, among other considerations, the following:

(1) A highly collimated light source, insensitive to stray light
(2) Measurement in a well-mixed, unstratified stream
(3) A high degree of stability against drift due to voltage fluctuations, such as source aging and thermal effects
(4) The ability to make extended measurements without error due to progressive coating of optics by soot

E.10.3 In addition, a monochromatic source should be selected, preferably in the red portion of the spectrum, for ease of interpreting the data according to the theoretical modes.[14] For convenience, direct electric output in logarithmic units to avoid the need for manual range switching or resulting inaccuracies at the high end of the scale should be provided. An instrument has been designed that is intended to meet all those specifications *(see Figure 4.11.1)*.[15] Additional construction details are given in construction drawings available from the Building and Fire Research Laboratory, National Institute of Standards and Technology, Gaithersburg, MD 20899. The theory for data analysis is from note 1.

E.11 Reference Notes.

1. W. H. Twilley and V. Babrauskas, "User's Guide for the Cone Calorimeter," National Bureau of Standards (U.S.), Special Publication SP 745, 1988.

2. V. Babrauskas, J. R. Lawson, W. D. Walton, and W. H. Twilley, "Upholstered Furniture Heat Release Rates Measured with a Furniture Calorimeter," National Bureau of Standards (U.S.), NBSIR 82-2604, 1982.

3. V. Babrauskas and J. F. Krasny, "Fire Behavior of Upholstery Furniture," National Bureau of Standards (U.S.), NBS monograph 173, 1985.

4. L. R. Richardson, "Determining Degrees of Combustibility of Building Materials," National Building Code of Canada, 1st International Conference and Exhibition on Fire and Materials, September 24–25, 1992.

5. V. Babrauskas, "North American Experiences in the Use of Cone Calorimeter Data for Classification of Products, 1991," Proceedings of the International EUREFIC Seminar, pp. 89–103.

6. M. Janssens, "Calorimetry," *The SFPE Handbook of Fire Protection Engineering*, 3rd edition, Quincy, MA: NFPA, 2002, Section 3, Chapter 2.

7. R. F. Krause and R. G. Gann, "Rate of Heat Release Measurements Using Oxygen Consumption," *Journal of Fire and Flammability*, Vol. 11, April 1980, pp. 117–130.

8. V. Babrauskas, "Performance of the Ohio State University Rate of Heat Release Apparatus Using Poly(methyl methacrylate) and Gaseous Fuels," *Fire Safety Journal*, Vol. 5, 1982, pp. 9–20.

9. J. Tordella and W. H. Twilley, "Development of a Calorimeter for Simultaneously Measuring Heat Release and Mass Loss Rates," National Bureau of Standards (U.S.), NBSIR 83-2708, 1983.

10. C. Huggett, "Estimation of Rate of Heat Release by Means of Oxygen Consumption Measurements," *Fire and Materials*, Vol. 4, 1980, pp. 61–65.

11. W. J. Parker, "Calculations of the Heat Release Rate by Oxygen Consumption for Various Applications," National Bureau of Standards (U.S.), NBSIR 81-2427, 1982.

12. ISO 5657, *Fire Test Reaction to Fire Ignitability of Building Products*, International Organization for Standardization, Geneva, 1997.

13. V. Babrauskas, "Development of Cone Calorimeter — A Bench-Scale Heat Release Rate Apparatus Based on Oxygen Consumption," National Bureau of Standards (U.S.), NBSIR 82-2611, 1982.

14. G. Mulholland, "How Well Are We Measuring Smoke?" *Fire and Materials*, Vol. 6, 1982, pp. 65–67.

15. V. Babrauskas and G. Mulholland, "Smoke and Soot Data Determinations in the Cone Calorimeter," ASTM STP 983, *Mathematical Modeling of Fires*, Philadelphia: American Society for Testing and Materials, 1987, pp. 83–104.

Annex F Method of Determining Suitability of Oxygen Analyzers for Making Heat Release Measurements

This annex is not a part of the requirements of this NFPA document but is included for informational purposes only.

F.1 General. The type of oxygen analyzer best suited for fire gas analysis is of the paramagnetic type. Electrochemical analyzers or analyzers using zirconia sensors generally have been found not to have adequate sensitivity or suitability for this type of work. The normal range of the instrument to be used is 0 volume to 25 volume percent oxygen. The linearity of paramagnetic analyzers normally is better than can be checked by a user laboratory; therefore, verifying their linearity is not necessary. It is important, however, to confirm the noise and short-term drift of the instrument used. A recommended procedure is described in Section F.2.

F.2 Procedure.

F.2.1 Connect two different gas bottles approximately two percentage points apart (for example, 15 volume percent and 17 volume percent) to a selector valve at the inlet of the analyzer.

F.2.2 Connect the electrical power and let the analyzer warm up for 24 hours, with one of the test gases indicated in F.2.1 flowing through it.

--`,,,,,,-`-`,,`,,`,`,,`---

Copyright National Fire Protection Association
Provided by IHS under license with NFPA
No reproduction or networking permitted without license from IHS
Not for Resale

F.2.3 Connect a data acquisition system to the output of the analyzer. Quickly switch from the first gas bottle to the second bottle and immediately start collecting data, taking one data point per second. Collect data for 20 minutes.

F.2.4 Determine the drift by using a least-squares analysis fitting procedure to pass a straight line through the last 19 minutes of data. Extrapolate the line back through the first minute of data. The difference between the readings at 0 minutes and at 20 minutes on the fitted straight line represents the short-term drift. Record the drift in units of parts per million of oxygen.

F.2.5 The noise is represented by the root-mean-square deviation around the fitted straight line. Calculate that root-mean-square value and record it in units of parts per million of oxygen.

F.2.6 The analyzer is suitable for use in heat release measurements if the sum of the drift term plus the noise term is ±50 ppm oxygen (note that both terms need to be expressed as positive numbers).

F.3 Additional Precautions. A paramagnetic oxygen analyzer is directly sensitive to barometric pressure changes at its outlet port and to flow rate fluctuations in the sample supply stream. It is essential that the flow rate be regulated. Use either a flow rate regulator of the mechanical diaphragm type or an electronic mass flow rate controller. To protect against errors due to changes in barometric pressure, one of the following procedures should be used:

(1) Control the back pressure to the analyzer with a back pressure regulator of the absolute-pressure type.
(2) Electrically measure the actual pressure at the detector element and provide a signal correction for the analyzer output.

Annex G Informational References

G.1 Referenced Publications. The following documents or portions thereof are referenced within this standard for informational purposes only and are thus not part of the requirements of this document unless also listed in Chapter 2.

G.1.1 NFPA Publication. National Fire Protection Association, 1 Batterymarch Park, Quincy, MA 02169-7471.

NFPA 258, *Recommended Practice for Determining Smoke Generation of Solid Materials*, 2001 edition.

Janssens, M., "Calorimetry," *The SFPE Handbook of Fire Protection Engineering*, 3rd edition, Quincy, MA: NFPA, 2002, Section 3, Chapter 2.

G.1.2 Other Publications.

G.1.2.1 ASTM Publications. American Society for Testing and Materials, 100 Barr Harbor Drive, West Conshohocken, PA 19428-2959.

ASTM D 3286, *Standard Test Method for Gross Calorific Value of Coal and Coke by the Isoperibol Bomb Calorimeter*, 1996.

ASTM RR: E05-1008, *Report to ASTM on Cone Calorimeter Inter-Laboratory Trials,* 1990.

ASTM E 906, *Standard Test Method for Heat and Visible Smoke Release Rates for Materials and Products*, 1997.

ASTM E 1354, *Standard Test Method for Heat and Visible Smoke Release Rates for Materials and Products Using an Oxygen Consumption Calorimeter (Cone Calorimeter)*, 2003.

G.1.2.2 ISO Publications. International Organization for Standardization, 1, rue de Varembé, Case postale 56, CH-1211 Geneva 20, Switzerland.

ISO 5657, *Reaction to Fire Tests — Ignitability of Building Products Using a Radiant Heat Source*, 1997.

ISO 5660, *Reaction-to-Fire Tests — Heat Release, Smoke Production and Mass Loss Rate — Part 1: Heat Release Rate (Cone Calorimeter Method)*, 2002.

G.1.2.3 NBS Publications. National Bureau of Standards, now National Institute of Standards and Technology (NIST), 100 Bureau Drive, Gaithersburg, MD 20899.

Babrauskas, V., "Development of Cone Calorimeter — A Bench-Scale Heat Release Rate Apparatus Based on Oxygen Consumption," NBSIR 82-2611, 1982.

Babrauskas, V., and J. F. Krasny, "Fire Behavior of Upholstery Furniture," NBS monograph 173, 1985.

Babrauskas, V., J. R. Lawson, W. D. Walton, and W. M. Twilley, "Upholstered Furniture Heat Release Rates Measured with a Furniture Calorimeter," NBSIR 82-2604, 1982.

Parker, W. J., "Calculations of the Heat Release Rate by Oxygen Consumption for Various Applications," NBSIR 81-2427, 1982.

Tordella, J., and W. H. Twilley, "Development of a Calorimeter for Simultaneously Measuring Heat Release and Mass Loss Rates," NBSIR 83-2708, 1983.

Twilley, W. H., and V. Babrauskas, "User's Guide for the Cone Calorimeter," Special Publication SP 745, 1988.

G.1.2.4 Other Publications.

Babrauskas, V., "North American Experiences in the Use of Cone Calorimeter Data for Classification of Products, 1991," Proceedings of the International EUREFIC Seminar, pp. 89–103.

Babrauskas, V., "Performance of the Ohio State University Rate of Heat Release Apparatus Using Poly(methyl methacrylate) and Gaseous Fuels," *Fire Safety Journal*, Vol. 5, 1982, pp. 9–20.

Babrauskas, V., and G. Mulholland, "Smoke and Soot Data Determinations in the Cone Calorimeter," ASTM STP 983, *Mathematical Modeling of Fires*, Philadelphia: American Society for Testing and Materials, 1987, pp. 83–104.

Huggett, C., "Estimation of Rate of Heat Release by Means of Oxygen Consumption Measurements," *Fire and Materials*, Vol. 4, 1980, pp. 61–65.

Krause, R. F., and R. G. Gann, "Rate of Heat Release Measurements Using Oxygen Consumption," *Journal of Fire and Flammability*, Vol. 11, April 1980, pp. 117–130.

Mulholland, G., "How Well Are We Measuring Smoke?" *Fire and Materials*, Vol. 6, 1982, pp. 65–67.

Richardson, L. R., "Determining Degrees of Combustibility of Building Materials," National Building Code of Canada, 1st International Conference and Exhibition on Fire and Materials, September 24–25, 1992.

G.2 Informational References. (Reserved)

G.3 References for Extracts. (Reserved)

Copyright National Fire Protection Association
Provided by IHS under license with NFPA
No reproduction or networking permitted without license from IHS
Not for Resale

Index

© 2004 National Fire Protection Association. All Rights Reserved.

The copyright in this index is separate and distinct from the copyright in the document that it indexes. The licensing provisions set forth for the document are not applicable to this index. This index may not be reproduced in whole or in part by any means without the express written permission of NFPA.

-A-

Analyzers
- Carbon dioxide A.4.9, C.3
- Carbon monoxide C.3.1
- Oxygen ..... *see* Oxygen analyzers

Apparatus, test ..... Chap. 4, Annex E
- Horizontal position 4.1.3
- Vertical position D.7

Application of standard 1.3, A.1.3

-B-

Back face conditions E.6
Bias, test B.2
Burner, calibration of 4.13

-C-

Calculations
- Calibration constant using methane 8.2, A.8.2
- Carbon dioxide ..... C.1 to C.3
- Carbon monoxide ..... C.1 to C.3
- Effective heat of combustion 8.3.2
- Heat release rates 8.3.1, C.1, C.3.2, C.4.2
- Mass loss rate 8.3.2
- Oxygen ..... Chap. 8, A.8.2
- Repeatability/reproducibility B.1.3
- Smoke obscuration 8.3.3
- Water C.2, C.4

Calibration ..... Chap. 5, A.5.3 to A.5.5
- Burner 4.13
- Constant 8.2
- Heat flux meter ..... 4.12.2 to 4.12.3, 5.1
- Heat release 5.3, A.5.3
- Load cell 5.4, A.5.4
- Methane 8.2, A.8.2
- Optical calibration filters 4.14
- Oxygen analyzer 5.2
- Procedures 7.1.4
- Smoke meter 5.5, A.5.5

Carbon dioxide
- Analysis ..... A.4.9, C.1 to C.3
- Removal 4.9, 7.1.1.1, C.1

Carbon monoxide, analysis of ..... C.1 to C.3
Combustion, heat of ..... *see* Heat of combustion
Commentary ..... Annex E
Cone heaters ..... *see* Heaters, conical
Controllers
- Electronic mass flow ..... 5.3.2 to 5.3.4
- Temperature 4.3, 4.12.3, 5.1

-D-

Data collection 7.2.4, 7.2.6.1, 7.2.6.3.2, 7.2.7
- Digital 4.15
- Systems ..... 4.1(5), D.7(5)

Definitions ..... Chap. 3, A.3.3.1.2
Delamination 1.3.2.3, 4.6.4
Dry test meters ..... 5.3.2 to 5.3.3

-E-

Edge-burning 4.6.4
Effective heat of combustion ..... *see* Heat of combustion
Electric spark ignition ..... 1.3.3.7.1, 4.1(4), 4.7, E.5
- Test procedures 7.2.5, 7.2.6.3
- Vertical position ..... D.5, D.7(4)

Electronic mass flow controllers ..... 5.3.2 to 5.3.4
Exhaust flow rate ..... 1.3.3.3, 1.3.3.5, 7.1.3, 9.1(11), A.7.1.3
Exhaust gas system ..... 4.1(3), 4.4, D.7(3)
- Blower 7.1.2
- Safety precautions ..... 7.3.2 to 7.3.3

Exhaust orifice meters 4.4.1, 4.15.1, 5.2.1.2
External ignition 1.1.1, 1.3.3.7.1, 7.1.6, A.1.1.1, A.1.1.3, A.1.3.2, A.1.3.3.7, D.5
Extinction area, average specific B.1.3

-F-

Filters, optical calibration 4.14
Fire retardants, use of 1.3.1.4
Fires, correlation with tests 1.3.2.4, A.1.3.2.4
Flaming
- Self-extinguishing 7.2.6.3
- Sustained ..... *see* Sustained flaming
- During testing 7.2.6, A.7.2.6
- Transitory ..... 7.2.6.1, 9.1(23)

Flashing ..... 7.2.6.1, 9.1(23)
Flowmeters ..... 5.3.2 to 5.3.4

-G-

Gardon (foil) type heat flux meters 4.12.1
Gas sampling 4.9, A.4.9
Gloves, protective 7.3.1

-H-

Heaters, conical ..... 4.1(1), 4.2, A.4.2.3, A.4.6.2
- Cross-sectional view ..... Fig. 4.1.2
- Design E.4
- Flux calibration 5.1
- Power to 7.1.2
- Vertical position ..... D.7(1), D.8

Heat evolution 1.3.3.4
Heat flux meters 4.12, 5.1
Heating flux ..... 5.1, 9.1(11), A.1.2.1, E.5
- Definition 3.3.3
- Horizontal exposure 1.3.3.7, A.1.3.3.7
- Vertical exposure D.5

Heat of combustion
- Effective 1.1.2, 1.2.1, 1.3.3.4.1, 1.3.3.5.1, E.9
  - Calculations 8.3.2
  - Definition 3.3.1.1
  - Precision results B.1.3
  - Symbol 1.5
- Net
  - Definition 3.3.1.2, A.3.3.1.2
  - Symbol 1.5

Heat release calibration 5.3, A.5.3
Heat release rate ..... 1.1.2, 1.2.1 to 1.2.3, 1.3.1.3 to 1.3.1.4, 1.3.3.1, 9.1(14) to 9.1(18), A.9.1(15), E.8.2
- Calculations 8.3.1, C.1, C.3.2, C.4.2
- Definition 3.3.2
- Mean rate comparison for three specimens 7.2.10
- Measurements ..... 1.2.3, 1.3.3.5, E.2 to E.3, Annex F
- Precision results B.1.3
- Symbols 1.5

Copyright National Fire Protection Association
Provided by IHS under license with NFPA
No reproduction or networking permitted without license from IHS
Not for Resale

Horizontal orientation 1.1.3, 1.3.1.4, 4.1.3, 7.2.2, A.1.1.3, A.1.3.2
Exploded view of ..... Fig. 4.1.3
Heating flux range 1.3.3.7, A.1.3.3.7
Specimen holder ..... 4.6.1 to 4.6.2, A.4.6.2

-I-

Ignitibility 1.1.2, 1.3.3.3.1
Definition 3.3.4
Determination 1.3.3.8
Ignition .....*see also* Electric spark ignition; External ignition
Circuits 4.7, D.10
Pilot A.1.1.1, E.5
Procedure 7.2.5
Timers ..... 4.8, 7.2.5(1)
Time to 1.2.1

-L-

Light obscuration .....*see* Smoke obscuration
Limitations of test
Horizontal position 1.3.2
Vertical position D.4
Limits to resolution E.8
Load cells ..... 4.1(6), 4.5
Calibration 5.4, A.5.4
Data collection 4.15.1
Equilibrium of, and radiation shield removal 7.2.3, A.7.2.3
Excessive heat transmission to 7.1.5
Power to 7.1.2
Vertical position ..... D.7(6)

-M-

Mass flow controllers, electronic ..... 5.3.2 to 5.3.4
Mass loss rates ..... 1.1.2, 1.2.1, 1.3.3.3.1, 1.3.3.4.1, 1.3.3.5.1, 4.1(6), 7.2.7, 9.1(19) to 9.1(20)
Calculations 8.3.2
Symbol 1.5
Measurement, units of 1.4
Meters
Exhaust orifice 4.4.1, 4.15.1, 5.2.1.2
Flow ..... 5.3.2 to 5.3.4
Heat flux 4.12, 5.1
Smoke 5.5, A.5.5

-N-

Net heat of combustion .....*see* Heat of combustion

-O-

Optical calibration filters 4.14
Orientation ..... 1.3.1.4, 9.1(10), A.1.1.3, A.1.3.2; *see also* Horizontal orientation
Definition 3.3.5, D.6
Vertical ..... 1.3.1.4, A.1.1.3, A.1.3.2, Annex D
Orifice meters 4.4.1, 4.15.1, 5.2.1.2
Oxygen analyzers 4.10, E.7
Calibration 5.2, 8.2, A.8.2
Data collection 4.15
Power to 7.1.2
Suitability for measuring heat release ..... Annex F
Oxygen concentration 1.3.3.3, 1.3.3.5, E.3.2
Oxygen consumption 1.3.3.1, 1.3.3.5
Principle E.3.2
Definition 3.3.6

-P-

Precision, test B.1
Pressure transducer 7.1.2
Purpose of standard 1.2, A.1.2.1

-R-

Radiant heat sources 1.3.3.4
Radiation shield 4.2.9, 7.2.3, 7.2.4.1, 7.2.5, A.7.2.3
Referenced publications ..... Annex G
Repeatability B.1.1
Calculations B.1.3
Definition B.1.2
Reports, test ..... Chap. 9, A.9.1(15); *see also* Data collection
Reproducibility B.1.1
Calculations B.1.3
Definition B.1.2
Retainer frames ..... 4.6.4, 9.1(10), A.6.2.2

-S-

Safety precautions 7.3
Schmidt–Boetler (thermopile) type heat flux meters 4.12.1
Scope of standard 1.1, A.1.1.1, A.1.1.3
Shall (definition) 3.2.1
Shield, radiation .....*see* Radiation shield
Should (definition) 3.2.2
SI units 1.4.1
Smoke, visible (definition) 3.3.9
Smoke development 1.1.2, 1.3.3.5.2
Smoke meters 4.15.1, 5.5, A.5.5
Smoke obscuration 1.3.3.3.1, 1.3.3.5.2
Calculations 8.3.3
Definition 3.3.7
Measuring system ..... 4.11, 9.1(21), E.10
Smoke production 1.2.1, 1.3.3.4.1
Smoke release, rate of ..... 1.2.2 to 1.2.3, 1.3.1.3
Spalling A.7.2.9
Spark plugs .....*see* Electric spark ignition
Specimen holders ..... 4.1(2), 4.6
Empty 7.1.5, 7.2.1, 7.2.8.2
Removal 7.2.8.1
Replacement 7.2.8.2
During testing 7.2.2
Vertical position ..... D.7(2), D.9
Specimens, test ..... 1.3.1.2, Chap. 6, A.6.2.2
Calculations 8.3
Composite ..... 6.2.1 to 6.2.2, A.6.2.2
Conditioning 6.3
Intumescent 4.6.4, 6.2.2, A.6.2.2
Mass ..... 1.3.3.3.1; *see also* Mass loss rate
Mounting ..... 1.3.1.3, 4.6, 6.2.2, 9.1(10), A.6.2.2
Nonigniting 7.2.9, A.7.2.9
Orientation .....*see* Orientation
Reports ..... Chap. 9, A.9.1(15)
Size and preparation 6.1
Use of three 7.2.10
Standard (definition) 3.2.3
Summary of test method 1.3.3, A.1.3.3.4, A.1.3.3.7, D.3
Sustained flaming ..... A.7.2.6, A.9.1(15)
Definition 3.3.8
Precision results B.1.3
During testing 7.2.6.2
Time to ..... 1.3.3.3.1, 1.3.3.4.1, 1.3.3.8, 9.1(13)
Swelling A.7.2.9
Symbols 1.5, C.2

-T-

Temperature controllers 4.3, 4.12.3, 5.1
Test apparatus .....*see* Apparatus
Test environment 4.16
Test procedure ..... Chap. 7
Limitations 1.3.2, D.4
Preparation 7.1, A.7.1.3
Safety precautions 7.3
Thermocouples ..... 4.2.6 to 4.2.8, 4.15.1
Traps 7.1.1

--`,,,,,,--`,,`,,`,`,,`---

Copyright National Fire Protection Association
Provided by IHS under license with NFPA
No reproduction or networking permitted without license from IHS
Not for Resale

-U-

Units 1.4

-V-

Vertical orientation ..... 1.3.1.4, A.1.1.3, A.1.3.2, Annex D

Visible smoke (definition) 3.3.9

-W-

Water, analysis C.2, C.4
Wet test meters ..... 5.3.2 to 5.3.4
Wire grids ..... 4.6.4, 9.1(10), A.6.2.2

Copyright National Fire Protection Association
Provided by IHS under license with NFPA
No reproduction or networking permitted without license from IHS
Not for Resale

Sequence of Events Leading to Publication of an NFPA Committee Document

Call goes out for proposals to amend existing document or for recommendations on new document.

▼

Committee meets to act on proposals, to develop its own proposals, and to prepare its report.

▼

Committee votes on proposals by letter ballot. If two-thirds approve, report goes forward. Lacking two-thirds approval, report returns to committee.

▼

Report — *Report on Proposals* (ROP) — is published for public review and comment.

▼

Committee meets to act on each public comment received.

▼

Committee votes on comments by letter ballot. If two-thirds approve, supplementary report goes forward. Lacking two-thirds approval, supplementary report returns to committee.

▼

Supplementary report — *Report on Comments* (ROC) — is published for public review.

▼

NFPA membership meets (Annual or Fall Meeting) and acts on committee report (ROP or ROC).

▼

Committee votes on any amendments to report approved at NFPA Annual or Fall Meeting.

▼

Appeals to Standards Council on Association action must be filed within 20 days of the NFPA Annual or Fall Meeting.

▼

Standards Council decides, based on all evidence, whether or not to issue standard or to take other action, including upholding any appeals.

Committee Membership Classifications

The following classifications apply to Technical Committee members and represent their principal interest in the activity of the committee.

M *Manufacturer:* A representative of a maker or marketer of a product, assembly, or system, or portion thereof, that is affected by the standard.

U *User:* A representative of an entity that is subject to the provisions of the standard or that voluntarily uses the standard.

I/M *Installer/Maintainer:* A representative of an entity that is in the business of installing or maintaining a product, assembly, or system affected by the standard.

L *Labor:* A labor representative or employee concerned with safety in the workplace.

R/T *Applied Research/Testing Laboratory:* A representative of an independent testing laboratory or independent applied research organization that promulgates and/or enforces standards.

E *Enforcing Authority:* A representative of an agency or an organization that promulgates and/or enforces standards.

I *Insurance:* A representative of an insurance company, broker, agent, bureau, or inspection agency.

C *Consumer:* A person who is, or represents, the ultimate purchaser of a product, system, or service affected by the standard, but who is not included in the *User* classification.

SE *Special Expert:* A person not representing any of the previous classifications, but who has a special expertise in the scope of the standard or portion thereof.

NOTES:

1. "Standard" connotes code, standard, recommended practice, or guide.
2. A representative includes an employee.
3. While these classifications will be used by the Standards Council to achieve a balance for Technical Committees, the Standards Council may determine that new classifications of members or unique interests need representation in order to foster the best possible committee deliberations on any project. In this connection, the Standards Council may make such appointments as it seems appropriate in the public interest, such as the classification of "Utilities" in the National Electrical Code Committee.
4. Representatives of subsidiaries of any group are generally considered to have the same classification as the parent organization.

Copyright National Fire Protection Association
Provided by IHS under license with NFPA
No reproduction or networking permitted without license from IHS
Not for Resale

NFPA Technical Committee Document Proposal Form

Note: All proposals must be received by 5:00 p.m. EST/EDST on the published proposal closing date.

For further information on the standards-making process, please contact Codes and Standards Administration at 617-984-7249. For technical assistance, please call NFPA at 617-770-3000.

FOR OFFICE USE ONLY
Log #: _____
Date Rec'd: _____

Please indicate in which format you wish to receive your ROP/ROC: ☐ **CD ROM** ☐ **paper** ☐ **download**
(Note: In choosing the download option you intend to view the ROP/ROC from our Website. No copy will be sent to you.)

Date 12/18/02 **Name** John B. Smith **Telephone** 617-555-1212
Company _____
Address 9 Seattle St. **City** Seattle **State** WA **Zip** 02255
Please indicate organization represented (if any) Fire Marshals Assn. of North America

1. **a) NFPA Document Title** National Fire Alarm Code
   b) NFPA No. & Edition NFPA 72, 2002 ed. **c) Section/Paragraph** 4.4.7.1.1

2. **Proposal Recommends:** *(check one)* ☐ **new text** ☐ **revised text** ☒ **deleted text**

3. **Proposal.** *(Include proposed new or revised wording, or identification of wording to be deleted.)* Note: Proposed text should be in legislative format, that is, use underscore to denote wording to be inserted (inserted wording) and strike-through to denote wording to be deleted (~~deleted wording~~). Delete exception.

4. **Statement of Problem and Substantiation for Proposal.** Note: State the problem that will be resolved by your recommendation. Give the specific reason for your proposal including copies of tests, research papers, fire experience, etc. If more than 200 words, it may be abstracted for publication. A properly installed and maintained system should be free of ground faults. The occurrence of one or more ground faults should be required to cause a "trouble" signal because it indicates a condition that could contribute to future malfunction of the system. Ground fault protection has been widely available on these systems for years and its cost is negligible. Requiring it on all systems will promote better installations, maintenance and reliability.

5. ☒ **This Proposal is Original Material.** Note: Original material is considered to be the submitter's own idea based on or as a result of his/her own experience, thought, or research and, to the best of his/her knowledge, is not copied from another source.

   ☐ **This Proposal is Not Original Material; Its Source** ***(if known)*** **is as Follows:** _____

Sample

I hereby grant the NFPA all and full rights in copyright to this proposal, and I understand that I acquire no rights in any publication of NFPA in which this proposal in this or another similar or analogous form is used.

Signature ***(Required)*** John B. Smith

PLEASE USE SEPARATE FORM FOR EACH PROPOSAL • NFPA FAX (617) 770-3500

Mail to: Secretary, Standards Council • NFPA • 1 Batterymarch Park • PO Box 9101 • Quincy, MA 02269-9101

Copyright National Fire Protection Association
Provided by IHS under license with NFPA
No reproduction or networking permitted without license from IHS
Not for Resale

NFPA Technical Committee Document Proposal Form

Note: All proposals must be received by 5:00 p.m. EST/EDST on the published proposal closing date.

For further information on the standards-making process, please contact Codes and Standards Administration at 617-984-7249. For technical assistance, please call NFPA at 617-770-3000.

FOR OFFICE USE ONLY
Log #: _____
Date Rec'd: _____

Please indicate in which format you wish to receive your ROP/ROC: ☐ **CD ROM** ☐ **paper** ☐ **download**
(Note: In choosing the download option you intend to view the ROP/ROC from our Website. No copy will be sent to you.)

Date _____ **Name** _____ **Telephone** _____
Company _____
Address _____ **City** _____ **State** _____ **Zip** _____
Please indicate organization represented (if any) _____

1. **a) NFPA Document Title** _____
   b) NFPA No. & Edition _____ **c) Section/Paragraph** _____

2. **Proposal Recommends:** *(check one)* ☐ **new text** ☐ **revised text** ☐ **deleted text**

3. **Proposal.** *(Include proposed new or revised wording, or identification of wording to be deleted.)* Note: Proposed text should be in legislative format, that is, use underscore to denote wording to be inserted (inserted wording) and strike-through to denote wording to be deleted (~~deleted wording~~). _____

4. **Statement of Problem and Substantiation for Proposal.** Note: State the problem that will be resolved by your recommendation. Give the specific reason for your proposal including copies of tests, research papers, fire experience, etc. If more than 200 words, it may be abstracted for publication. _____

5. ☐ **This Proposal is Original Material.** Note: Original material is considered to be the submitter's own idea based on or as a result of his/her own experience, thought, or research and, to the best of his/her knowledge, is not copied from another source.

   ☐ **This Proposal is Not Original Material; Its Source *(if known)* is as Follows:** _____

I hereby grant the NFPA all and full rights in copyright to this proposal, and I understand that I acquire no rights in any publication of NFPA in which this proposal in this or another similar or analogous form is used.

Signature *(Required)* _____

PLEASE USE SEPARATE FORM FOR EACH PROPOSAL • NFPA FAX (617) 770-3500

Mail to: Secretary, Standards Council • NFPA • 1 Batterymarch Park • PO Box 9101 • Quincy, MA 02269-9101

Copyright National Fire Protection Association
Provided by IHS under license with NFPA
No reproduction or networking permitted without license from IHS
Not for Resale